SONOQUI WASH CHANNELIZATION - PHASE III

TYPICAL SECTIONS

NOT TO SCALE

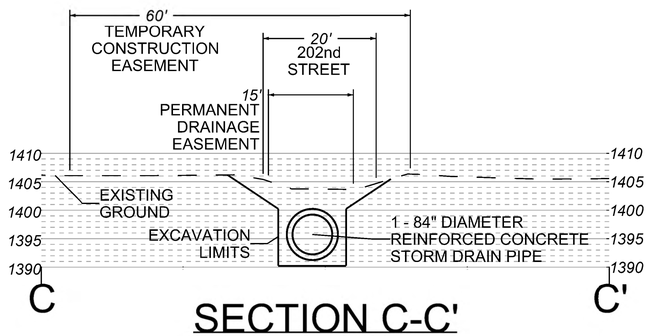

SECTION C-C'

STATION: 130+00

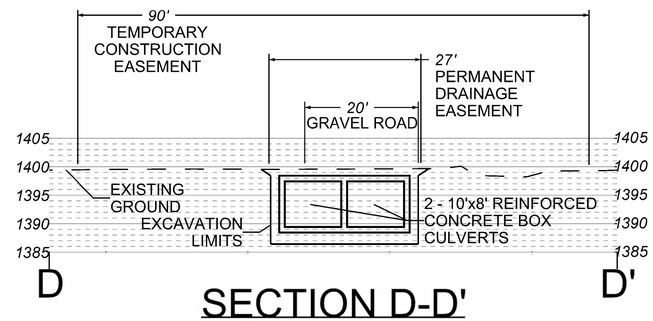

SECTION D-D'

STATION: 215+00

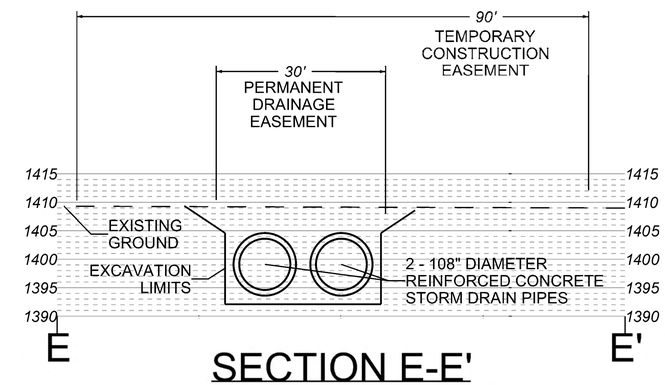

SECTION E-E'

STATION: 230+00

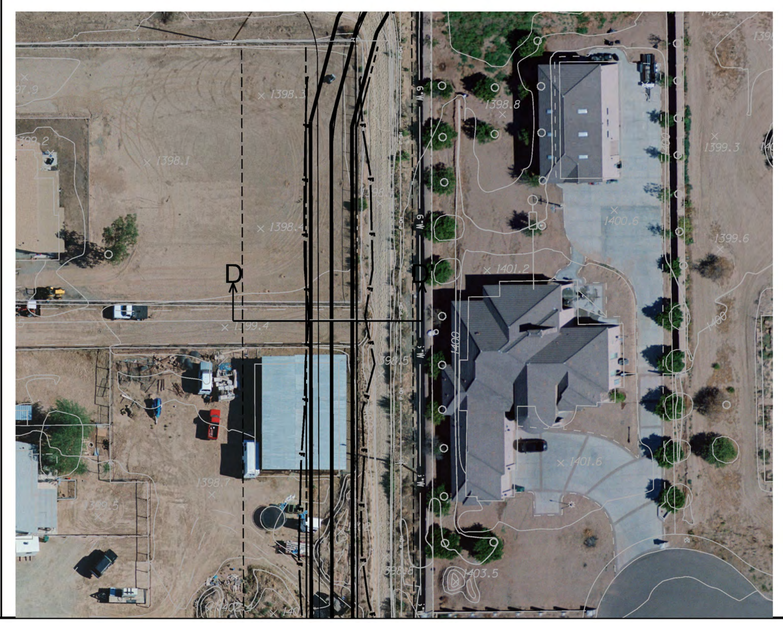

2801 West Durango Street, Phoenix, Arizona 85009, (602) 506-1501

www.fcd.maricopa.gov