Los Angeles County Flood Control District

Property of
Flood Control District of MC Library
Please Return to
2801 W. Durango
Phoenix, AZ 85009

DESIGN MANUAL

STANDARD DRAWINGS

A. E. Bruington, Chief Engineer

2250 Alcazar Street, Los Angeles
Telephone: (213) 223-2111

P. O. Box 2418, Terminal Annex
Los Angeles, California 90054

Los Angeles County Flood Control District

DESIGN MANUAL

STANDARD DRAWINGS

A. E. Bruington, Chief Engineer

2250 Alcazar Street, Los Angeles
Telephone: (213) 223-2111

P. O. Box 2418, Terminal Annex
Los Angeles, California 90054

INDEX TO STANDARD DRAWINGS

CATCH BASIN AND APPURTENANCES

2-D 160	Catch Basin	No. 1	(W=3'-6")
2-D 162	" "	No. 2	(W=7')
2-D 163	" "	No. 3	(W=10'; 14'; 21'; 28'; etc.)
2-D 101	" "	No. 4	(Curb Grating)
2-D 164	" "	No. 5	(Alley Grating, Gratings End to End, Parallel to Alley)
2-D 195	" "	No. 5A	(Alley Grating, Gratings Side by Side, Parallel to Alley)
2-D 109	" "	No. 6	(Side Opening and Grating)
2-D 170	" "	No. 7	(Side Opening with Two or More Gratings)
2-D 249.1, .2 and .3	" "	No. 8	(Side Opening in Curb Return)
2-D 471	" "	No. 9	(Manhole Within Street)
2-D 156	" "	Frame and Cover (Manhole)	
2-D 227	" "	Frame and Grating	
2-D 175	" "	Protection Bar	
2-D 172	" "	Reinforcement (In Walls)	
2-D 157	" "	Reinforcement (For Round Manholes)	
2-D 224	Connection to Catch Basin for Pipes 12 Inches Through 72 Inches		
2-D 232	Detail of Catch Basin Opening		
2-D 256	Catch Basin Outlet Transition Structure		
2-D 461	Modifications for Side Opening Catch Basins		

LOCAL DEPRESSIONS

2-D 88	Local Depression No. 2
2-D 248	Local Depression No. 3
2-D 415	Local Depression No. 4

JUNCTION STRUCTURES

2-D 189	Junction Structure	No. 1	(33" or Larger Side Inlet to Box)
2-D 112	" "	No. 2	(Side Inlet Larger Than 1/2 O.D. Pipe)
2-D 191	" "	No. 3	(30" or Smaller Side Inlet to Box)
2-D 193	" "	No. 4	(24" or Smaller Side Inlet to Pipe)

MANHOLES

2-D 102	Manhole	No. 1	(Pipes, 33" or Smaller)
2-D 184	"	No. 2	(Pipes, 36" or Larger)
2-D 104	"	No. 3	(Box or Arch)
2-D 113	"	No. 4	(Pipes, 36" or Larger, Large Side Inlet)
2-D 472	"	Frame and Cover	
2-D 197	"	Frame and Cover (Pressure)	
2-D 427	"	Special Frame and Cover	
2-D 107	"	Shaft	
2-D 210	"	Shaft (Pressure)	
2-D 428	"	Special Shaft	
2-D 429	"	Special Pressure Shaft and Plate Details	
2-D 430	"	Shaft Safety Ledge	

May 1, 1974

TRANSITION STRUCTURES

2-D 235	Transition Structure	No. 1	(Pipe, Arch to Box Arch)
2-D 239	" "	No. 2	(Box-Single to Single)
2-D 188	" "	No. 3	(Pipe to Pipe)
2-D 198	" "	No. 4	(Box-Single to Double)
2-D 260	" "	No. 5	(Box-Double to Double)
2-D 200	" "	No. 6	(Box-Double to Triple)
2-D 201	" "	No. 7	(Box-Triple to Triple)

FENCING

2-D 447	Break Away Fencing
2-D 476	Portable Security Fencing
2-D 178	Typical Fence and Gate Details for Channel Rights of Way
2-D 179	Typical Fence and Gate Details for Debris Basin Rights of Way
2-D 180	Typical Fence, Gate and Headwall Details for Channel Walls
2-D 403	Typical Fence and Gate Details for Spreading Grounds Rights of Way

MISCELLANEOUS

2-D 96	Standard Drop Step
2-D 152	Wooden Laminated Rail Street Barricade
2-D 171	Standard A-615 Reinforcing Bars
2-D 173.1 to .3	Pipe Support Across Trenches
2-D 177	Pipe Bedding in Trenches
2-D 187	Pavement Removal, Excavation, Backfill and Resurfacing in State Highways
2-D 190	Pipe Connections to Existing Storm Drains
2-D 192	Automatic Flap Gate Inlets to Storm Drains
2-D 205	Window Details for Multiple Box Structures
2-D 213.1 to .27	"D" Load Table for Design of Reinforced Concrete Pipe
2-D 214.1 to .6	Steel Areas for Reinforced Concrete Pipe
2-D 236.1 to .14	Design Table for Reinforced Concrete Box Conduits
2-D 238	Standard Wire Rope Barricade for Access Roads
2-D 250	Remodeling of Sanitary Sewer House Connections
2-D 251	Protection for Main Line and House Connection Sewers
2-D 253	Standard Double Pipe and Wire Revetment
2-D 254	Standard Rail and Wire Revetment
2-D 255	Standard Rail and Timber Stabilizer
2-D 261.1 to .3	Protection Barrier
2-D 264	Adjustable Protection Bar Stirrup
2-D 265	Inlet No. 1 Plan and Section
2-D 295.1	Subdrainage System for R.C. Rectangular Open Channel Case I
2-D 295.2	Subdrainage System for R.C. Rectangular Open Channel Case II
2-D 295.3	Subdrainage System for R.C. Rectangular Open Channel Case III
2-D 297	Standard Electrical Utility Equipment Box
2-D 393	Concrete Collar for Pipe 12 Inches Through 66 Inches
2-D 395	Additional Steel Reinforcement of Bell End R.C. Pipe

MISCELLANEOUS (continued)

2-D 400	Sample Sheet for Use as a Guide in Preparing Calculations for Shoring of Excavations
2-D 412	Soil Classification Chart
2-D 413	Soil Classification System
2-D 416	Clearance Marker
2-D 431	"D" Load Table for Design of Asbestos Cement Pipe
2-D 465	Additional Reinforcement for Jacked R.C. Box
2-D 466	Criteria for the Design of Shoring for Excavations
2-D 475	Sidewalk Access Ramp for Handicapped Persons

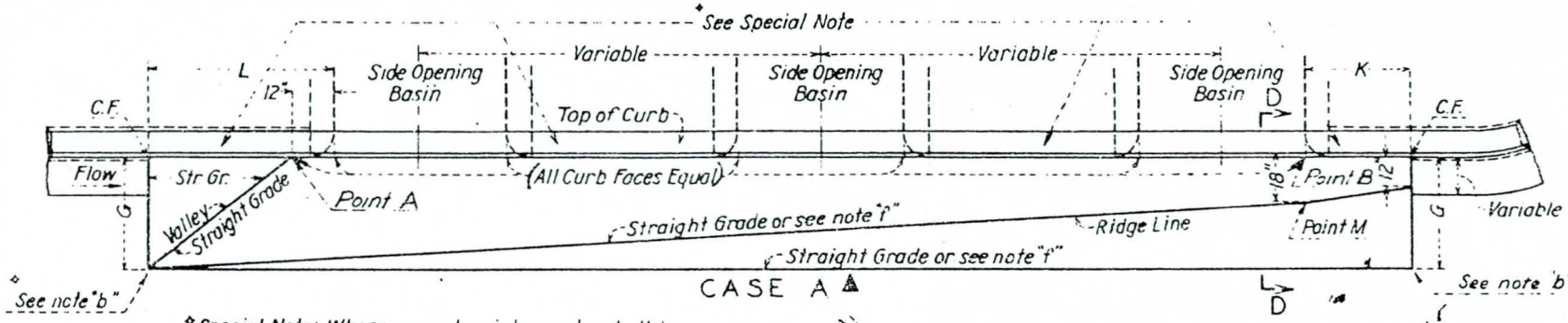

CASE A ⚠

*Special Note: Where no curb exists, curbs shall be constructed between ends of Local Depression. Curb section shall conform to that of controlling agency.

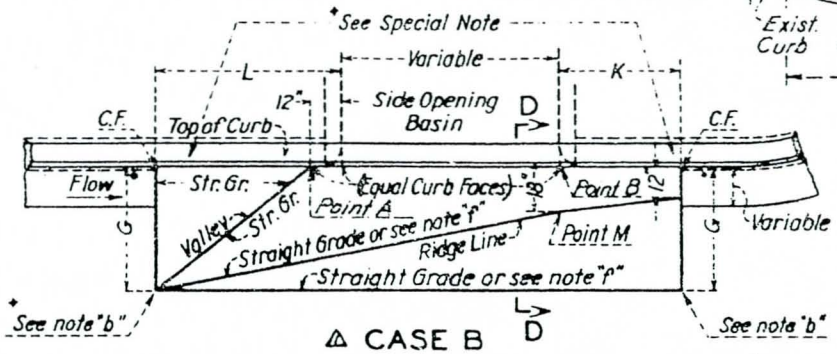

⚠ CASE B

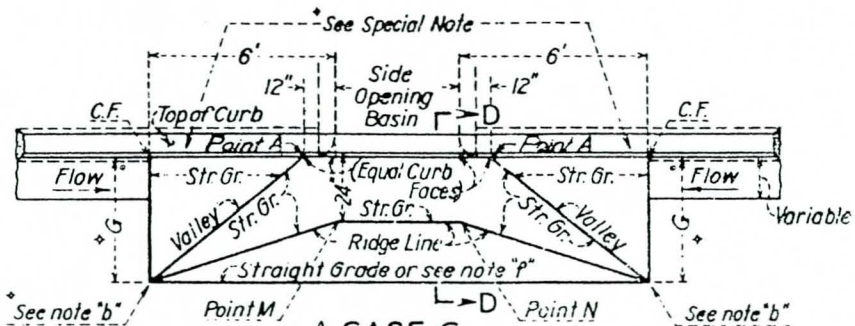

⚠ CASE C

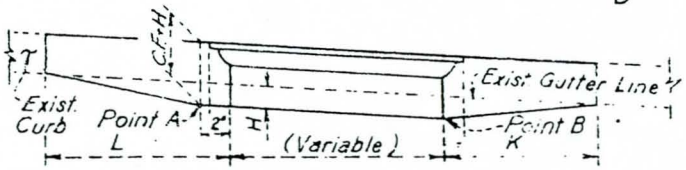

ELEVATION

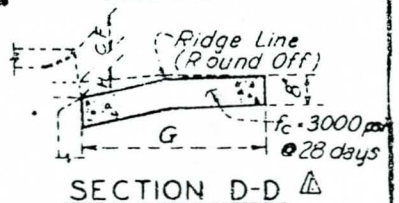

SECTION D-D ⚠

NOTES ⚠

- a. Local Depression shall be Case B unless otherwise specified on general plan.
- b. Elevations at outer corners shown on general plan. If no elevations are specified, the outer edge of Local Depression shall conform to finished street surface.
- c. Stakes shall be set to grade along the valley and along the ridge line (outer edge of actual depressed area). Stakes at points "M" and "N" shall be set on a straight grade between tops of end headers (if on a vertical curve see note "f"). These stakes shall not be removed until just before the final finishing.
- d. G = 4 feet unless otherwise specified. *K = 5 feet unless otherwise specified.
  L = 6 " " " "
  H = 4 inches unless otherwise shown on the general plan.
- e. Points A and B shall be set at H inches below existing gutter grade.
- f. Special details governing the construction of this Local Depression on vertical curve shown on general plan.

REFERENCES	REVISIONS			LOS ANGELES COUNTY FLOOD CONTROL DISTRICT
	MARK	DATE	DESCRIPTION	LOCAL DEPRESSION NO. 2 FOR SIDE OPENING CATCH BASINS
	*	7-17-52	Changed K=3' to K=5'	
	◊	10-14-52	[illegible]	
	△	12-19-52	Removed Note	
	✧	8-10-53	Added Notes and changed 4' to W	
	□	6-17-53	Added Note	
	○	8-4-53	Added Note	
	☆	8-5-53	Changed Arrows	
	△	5-3-68	REVISED, changed to G, Sec. [illegible]	

APPROVED BY: [illegible] 5/10/68 CHIEF ENGINEER

SUBMITTED BY: [illegible]

RECOMMENDED BY: DIVISION ENGINEER (DESIGN)

DATE

NO. 12-D66

SHEET 1 OF 1

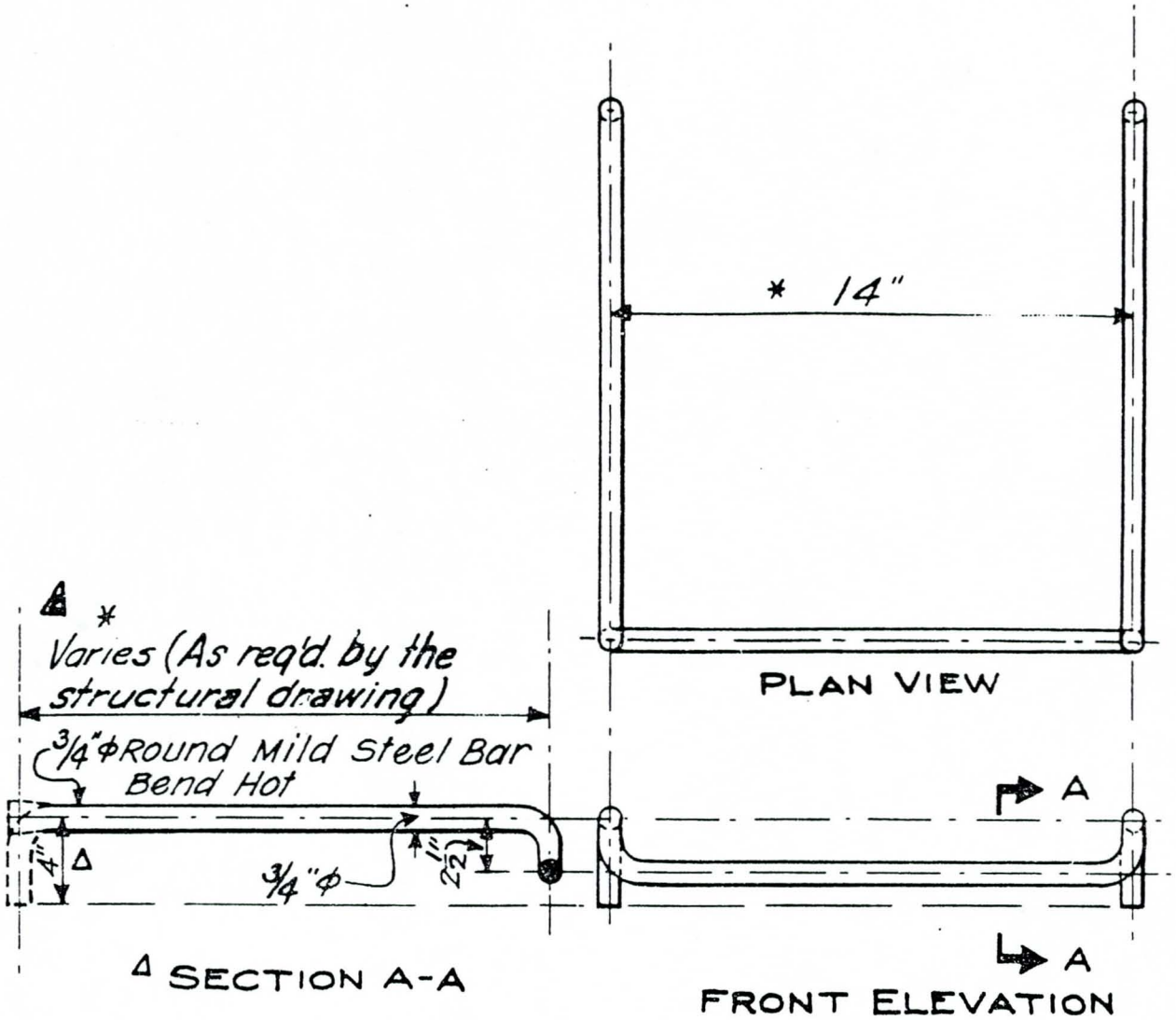

△ NOTES:

1. An alternate step may be used subject to the approval of the engineer.
2. All steps will be firmly and rigidly set and no cones or shafts will be accepted with bent or cracked steps.
3. Steps will be galvanized after bending.

REFERENCES	REVISIONS			LOS ANGELES COUNTY FLOOD CONTROL DISTRICT
	MARK	DATE	DESCRIPTION	* STANDARD DROP STEP
	*	10-22-54	Revised.	
	Δ	11-1956	Revised ~~& Add Note~~	
	△	5-7-68	Revised & Deleted note.	
	△	11-5-70	Added notes	

APPROVED BY: H. H. Maue
CHIEF ENGINEER

SUBMITTED BY: R. E. Christison
CHIEF DESIGN ENG'R

RECOMMENDED BY: W. B. Ream
OFFICE ENGINEER

DATE 3-15-38

NO. 2-D96
SHEET 1 OF 1

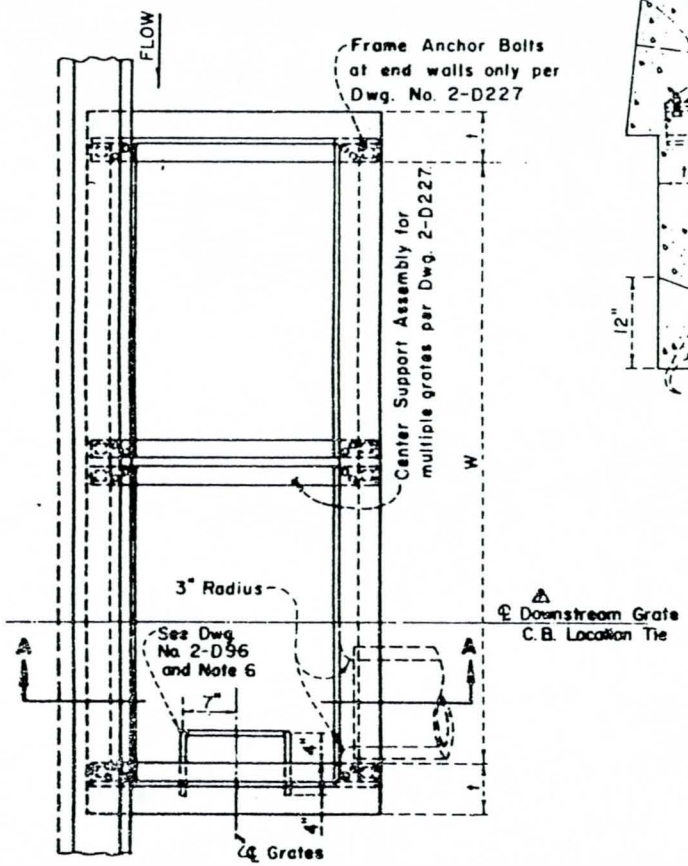

STRUCTURAL PLAN

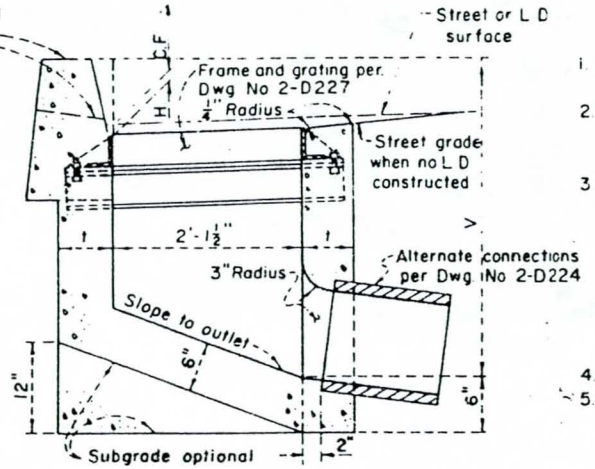

SECTION A-A

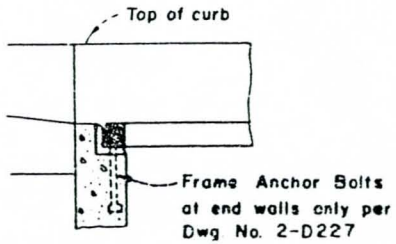

DETAIL OF END WALL

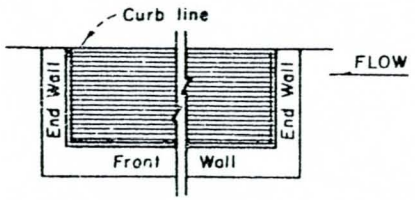

BASIN AND GRATING ALIGNMENT PLAN

NOTES

1. GRATING: One grating required unless otherwise shown on general plan. Position gratings as required by Std Dwg No 2-D248
2. CONNECTOR PIPE: Locate at downstream end of basin unless specifically noted otherwise. Pipe shall be trimmed to the final shape and length before the placement of concrete
3. CONCRETE: Design, $f_c' = 3000$ psi at 28 days. Floor of basin shall slope from all walls to the outlet and shall be given a steel-troweled finish. Street-side walls of the basin shall be poured to the elevation of the L.D or adjacent street surface. Curb wall of the basin and curb shall be poured monolithically, and the curb surface shall conform in slope, grade, color, and finish to the adjacent curbing.
4. REINFORCEMENT: As required by Std Dwgs Nos 2-D171 and 2-D172
5. DIMENSIONS:
   - V = 3'-6", unless otherwise shown.
   - W = 2'-11⅜" for one grating; add 3'-5¾" for each additional grating
   - t = 6 inches if V is 4'-0" or less.
   - t = 8 inches if V is 4'-0" to 8'-0".
   - t = 10 inches if V is 8'-0" or more
   - H = 0 inches at depressed driveway curb or when no L.D is constructed. See Std Dwg. No. 2-D248
6. STEPS: V to 3'-0" (incl.), place one step 12 inches above the floor of the basin.
   V over 3'-0", place steps at 12-inch intervals from floor of the basin to a minimum of 12 inches below top of the grating.
   Construct steps on front wall when connector pipe is aligned to downstream end wall

Supersedes drawing of the same number dated 12-28-38

LOS ANGELES COUNTY FLOOD CONTROL DISTRICT

CATCH BASIN NO. 4
PLAN, SECTION, AND DETAILS

RECOMMENDED BY: C.E. Caldwell, DIVISION ENGINEER (DESIGN)
APPROVAL RECOMMENDED BY: Clinton W. Ransom, ASS'T CHIEF DEPUTY ENGINEER
APPROVED BY: Walter J. Wood 7-24-68, CHIEF ENGINEER

SCALE	DATE	DWG. NO. 2-D 101
NONE	5-15-68	SHEET 1 OF 1

	REVISIONS		
	MARK	DATE	DESCRIPTION
	A	8-28-70	Added location tie

DRAWN BY: A.S.H.
CHECKED BY: D.W.H.
DESIGNED BY: G.J.P.
SUPERVISED BY: C.W.H.

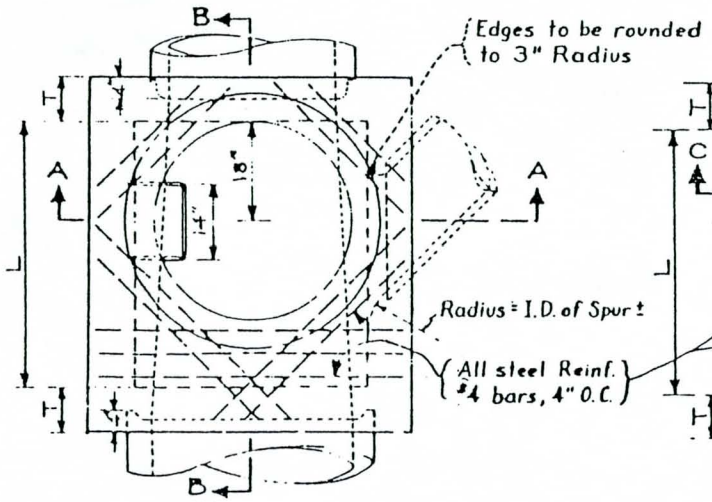

PLAN
(Shaft not shown)

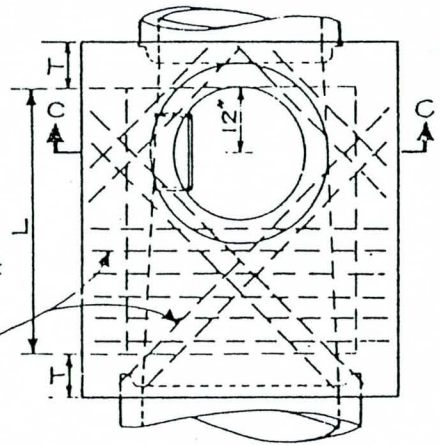

DETAIL N PLAN
(Shaft not shown)
See Note M

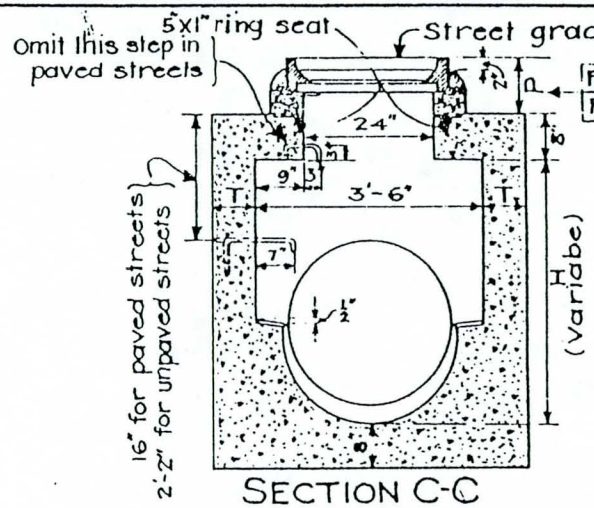

SECTION C-C

	Max	Min.
For paved streets	11"	8½"
For unpaved strs.	16"	15"

(See Note P)

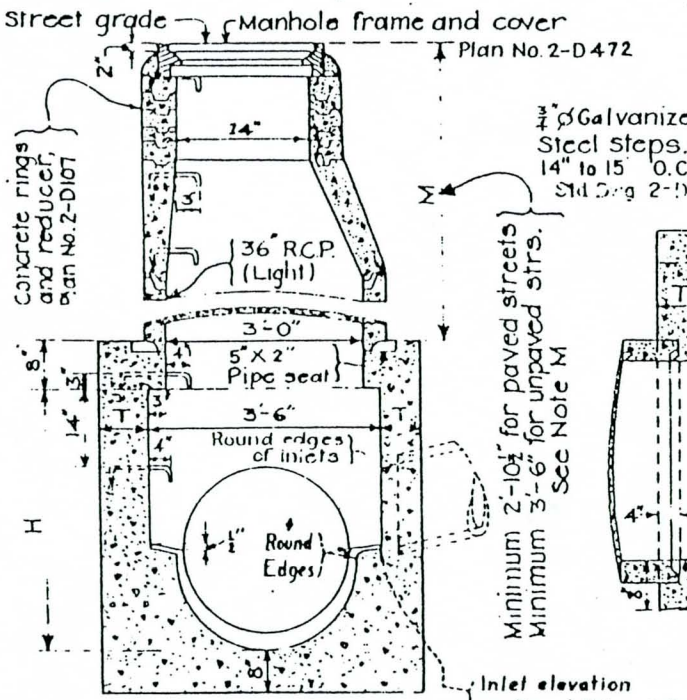

SECTION A-A

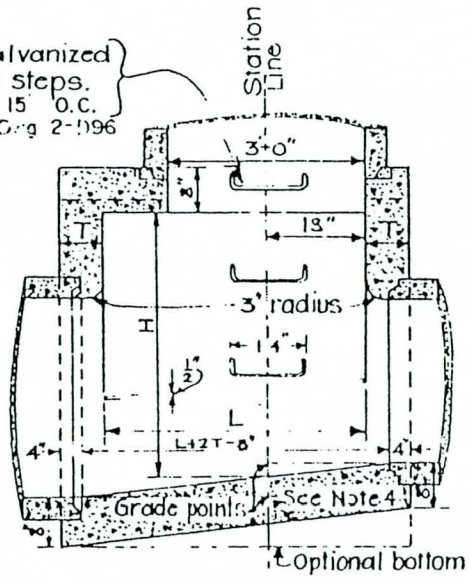

SECTION B-B

THIS DRAWING SUPERSEDES DWG. OF THE SAME NO. DATED 1-7-39

NOTES

H-HEIGHT H (in Sec A-A and Sec. B-B) shall be not less than 4'-0", but may be increased provided that the value of M shall be not less than the minimum specified and that the reducer shall be used. For H (in Sec. C-C) see Note P.

L-LENGTH L shall be 4 feet unless otherwise shown on plan. L may be increased or location of manhole shifted to meet pipe ends.

M-SHAFT shall be constructed as per Sec. C-C and Detail N when depth M from street grade to top of box is less than 2'-10½" for paved streets or 3'-6" for unpaved streets.

P-DEPTH P may be reduced to an absolute limit of 6" when larger values of P would reduce H (in Sec. C-C) to 3'-6" or less.

T-T shall be 8" for values of H up to and including 8 feet.
T shall be 10" for values of H over 8 feet.

7 Where Pressure Manhole No. 1 is specified on plans see Std Dwg. 2-D210 note 3.

1-STEPS shall be ¾" round, galvanized steel and anchored not less than 6 inches in the walls of structure. Unless otherwise shown, steps shall be spaced 14" to 15" O.C. The lowest step shall be not more than 2 feet above the ledge at side of manhole floor. See Std. Dwg 2-D96.

2-f'_c = 3000 psi at 28 days.

3-REINFORCING STEEL shall be per 2-D171, straight bars 1½" clear from face of concrete.

4-STATIONS of manholes shown on Plan apply at center line of shaft. Elevations are shown at shaft center and refer to the prolonged invert grade line. See Note L for shifting location.

5-FLOOR of manhole shall be steel-troweled.

6-RINGS, reducer and pipe for access shaft shall be sealed in mortar and neatly pointed or wiped inside shaft.

REFERENCES	REVISIONS			LOS ANGELES COUNTY FLOOD CONTROL DISTRICT
	MARK	DATE	DESCRIPTION	MANHOLE NO. 1 PLAN, SECTION AND DETAIL
				APPROVED BY — CHIEF ENGINEER
CHIEF DESIGN ENG'R	RECOMMENDED — DESIGN ENGINEER			DATE 3-1-74 — NO. 2-D102

REVISIONS "Continued"		
MARK	DATE	DESCRIPTION
△1	11-5-70	Step Spacing
△2	3-1-74	M.H. F.&C. ref.

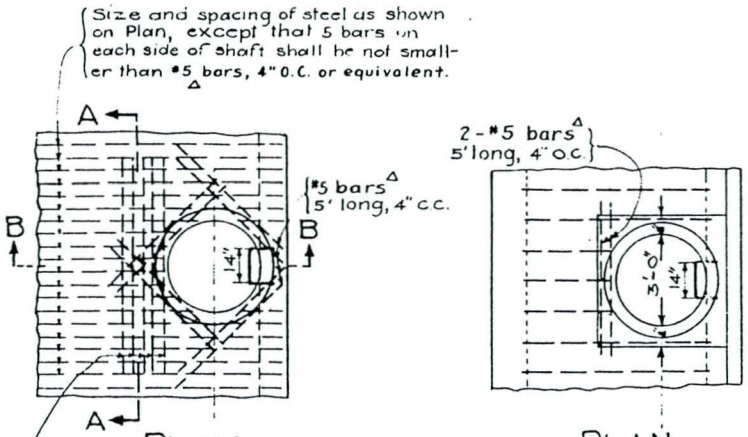

PLAN
(Shaft not shown)

PLAN
(Shaft not shown)

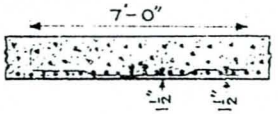

SECTION A-A

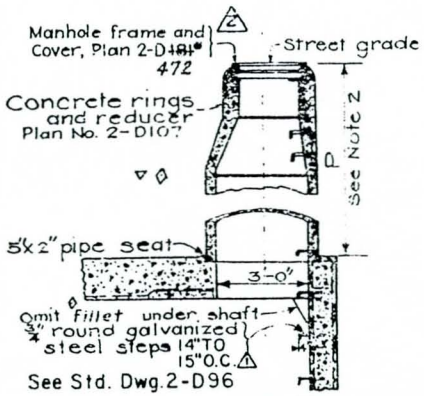

SECTION B-B

MANHOLE
FOR
BOX SECTION STORM DRAIN

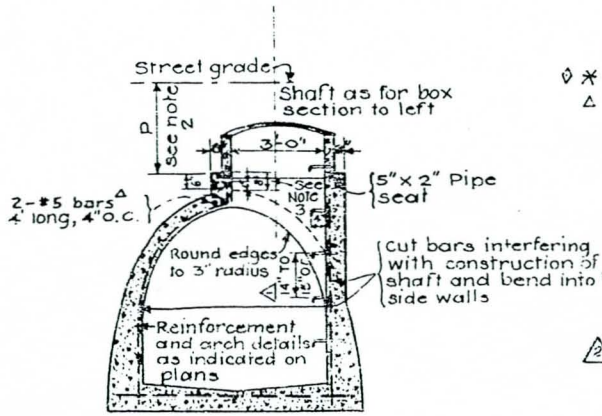

MANHOLE
FOR
ARCH SECTION STORM DRAIN

NOTES

1- **ACCESS SHAFT**: ◊ See 2-D107.

2- **DEPTH P**: When depth P from street grade to top of pipe seat is less than 2'-10½" in paved streets or 3'-6" in unpaved streets, construct 2 ft. diameter shaft, using concrete rings as per PLAN No. 2-D107, otherwise construct 3 ft. shaft as shown on this plan.

3- **OPTIONAL CONSTRUCTION**: Dimension from outside top of arch storm drain to top of pipe seat, shown 8 inches on this plan, may be increased, except that in so doing P shall not be reduced to less than 2'-10½" for paved streets or 3'-6" for unpaved streets, and that reducer shall be used.

4- **UNREINFORCED ARCH**: When specified with unreinforced concrete arch storm drain, construct manhole as shown on this plan for arch section, using 2-#5 bars.*

5- **STATIONS** shown on plan refer to center line of shaft

◊ * 6-

△ 7- **REINFORCING STEEL** to be per 2D-171.

8- **STEPS** shall be ¾" round galvanized steel anchored not less than 6" in walls of structure and unless otherwise shown shall be spaced 14" to 15" O.C. △ The lowest step shall be not more than 2 feet above the floor.

□ 9- f'_c = 3000 psi at 28 days. ** See Std. Dwg. 2-D96

∞ 10- Where Pressure Manhole No. 3 is specified on plans see Std. Dwg. 2-D210 note 3.

REFERENCES	REVISIONS			
	MARK	DATE	DESCRIPTION	
△2 ~~2-D181~~ ◊	*	7-46	Changed note	
2-D107	△	7-52	Changed note	
◊ 2-D171	◊	12-52	Revised	
∞ 2-D210	⊙	1-53	Revised	
2-D96	□	6-17-53	Added Note	
△2 2-D472	▽	8-53	Revised.	
	⊖	10-30-53	Changed dimension	
	⊠	10-5-54	Added Note	
	⊙	1-55	Revised	

LOS ANGELES COUNTY FLOOD CONTROL DISTRICT

MANHOLE NO. 3
PLAN, SECTION AND DETAIL

APPROVED BY: H. Dietrich, CHIEF ENGINEER

RECOMMENDED BY: W. D. Rann, OFFICE ENGINEER

CHIEF DESIGN ENGR.

DATE 1-6-39

No. 2-D104

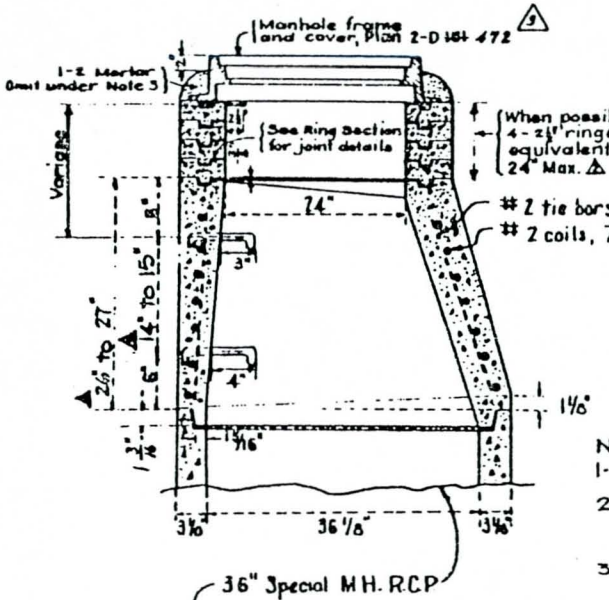

VERTICAL SECTION OF REINFORCED CONCRETE ECCENTRIC MANHOLE SHAFT

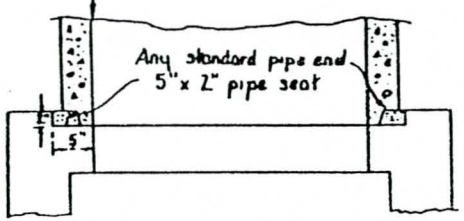

2½ inch rings shall be reinforced with two ½ round steel hoops; 6 inch and 8 inch rings shall be reinforced with four hoops, tied with No. 14 A.S.&W. gauge wire 8 inches on centers.

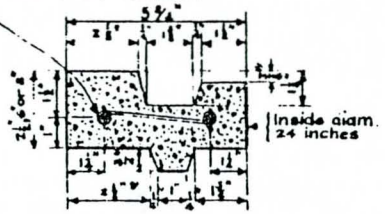

CROSS SECTION OF REINFORCED CONCRETE RING

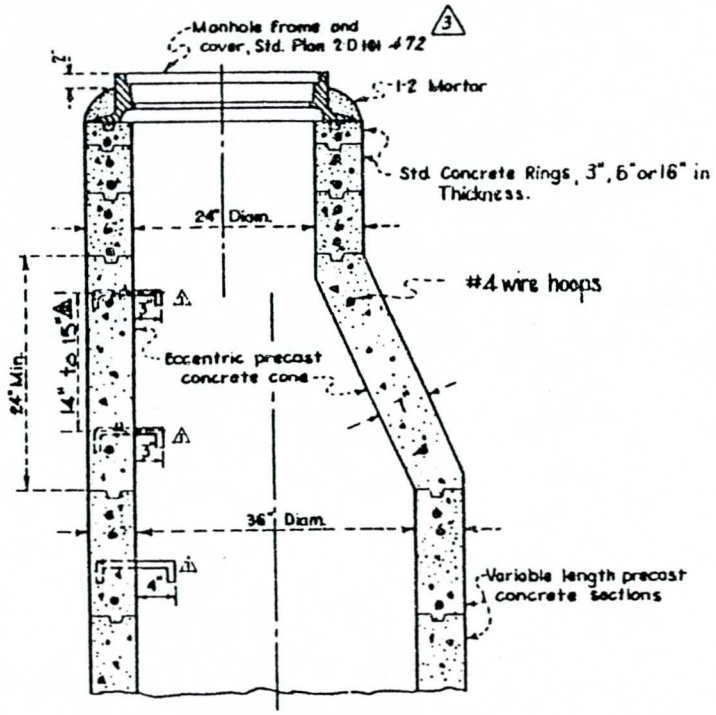

VERTICAL SECTION OF PLAIN CONCRETE ECCENTRIC MANHOLE SHAFT

NOTES

1-

2-ALL JOINTS shall be filled with 1-2 mortar and neatly pointed or wiped on inside of shaft.

3-COLLAR of 1-2 mortar around cover frame shall be omitted in rock and oil streets and in paved streets.

4-

5-STEPS shall be ¾ inch round galvanized steel. Top step shall be placed directly beneath the manhole cover frame.

Width of all steps shall be 14 inches between leg centers. Except where shown otherwise, spacing of steps in shaft shall be 14" to 15" inches on center. See Std. Dwg 2-D 96.

6-ECCENTRIC MANHOLE shaft, reducer, and rings may be plain concrete. For unreinforced sections, the minimum thickness shall be 6 inches. The concrete used shall be of such strength so as to develop 3500 p.s.i. or greater in 28 days.

* 7- The precast concrete manhole structures will be inspected by the Engineer ~~prior to shipment to the job site,~~ and he will indicate acceptance by marking the structures with the District's stamp. (for shipment to the job.)

NOTES "CONTINUED"

8. The surfaces of cones and shafts shall be smooth and neatly finished. Cones or shafts with imperfect molding or honeycomb surfaces will not be accepted

REFERENCES	REVISIONS		
~~2-D 181~~	MARK	DATE	DESCRIPTION
2-D 96	*	2-16-68	Added Note
2-D 472	△	11-9-70	Added note and projection of steps
	△	11-9-70	Added max. dim.
	△	3-1-74	M.H. F&C. ref. 1 Note 7

RECOMMENDED BY: W. R. Keene, OFFICE ENGINEER

CHIEF DESIGN ENGINEER

LOS ANGELES COUNTY FLOOD CONTROL DISTRICT

CONCRETE RINGS, REDUCER AND PIPE FOR MANHOLE SHAFT

APPROVED BY: H. B. Hedgen, CHIEF ENGINEER

DATE 1-6-'39

NO. 2-D107

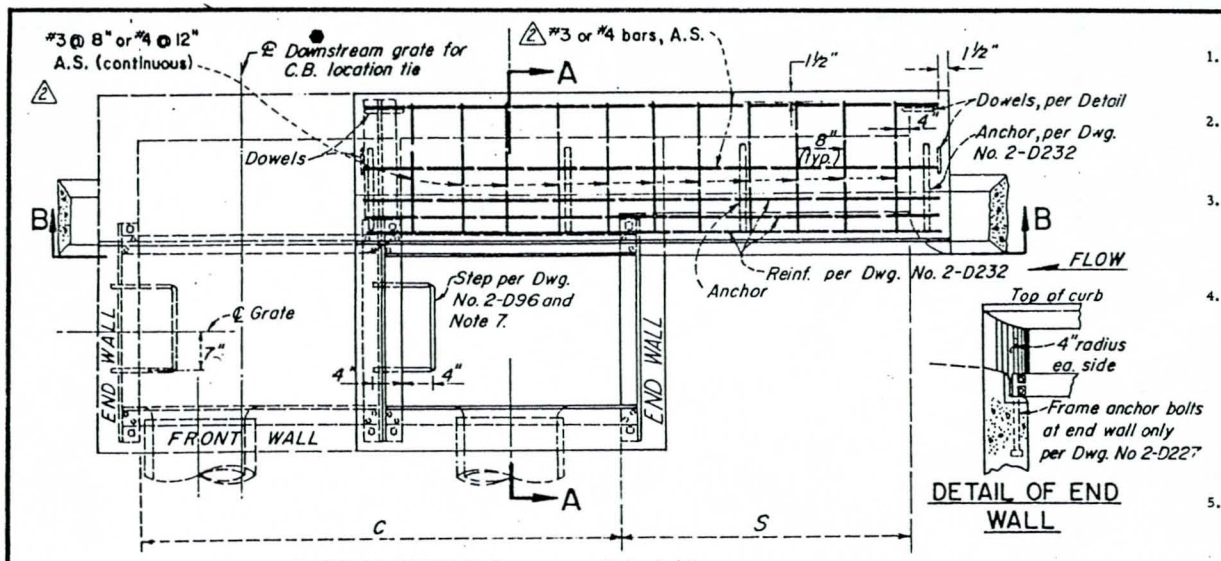

STRUCTURAL PLAN

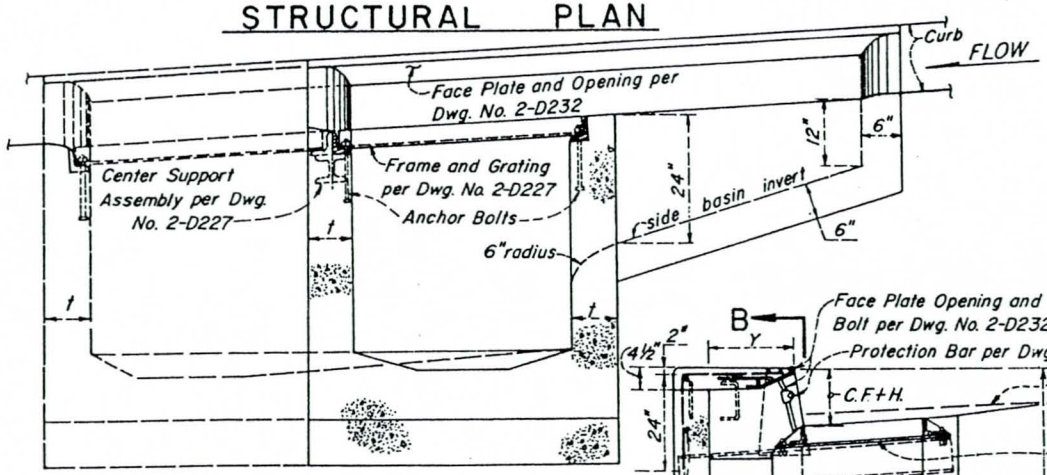

SECTION B–B

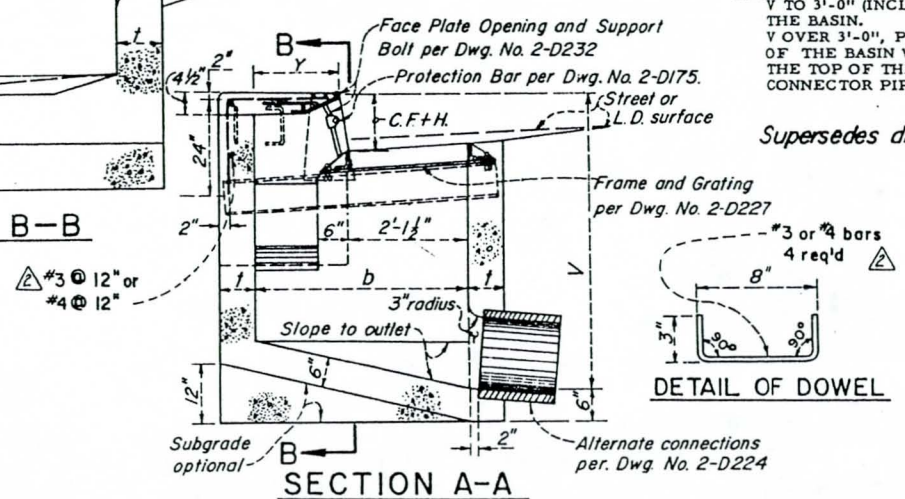

SECTION A–A

DETAIL OF DOWEL

NOTES

1. DESIGNATION:
   CATCH BASIN NO. 6 SHALL BE CASE A WITH ONE GRATE, UNLESS OTHERWISE SHOWN ON THE GENERAL PLAN.

2. GRATINGS:
   ADDITIONAL GRATINGS MAY BE SPECIFIED AS REQUIRED. GRATINGS AND SUPPORT ASSEMBLIES ARE TO BE POSITIONED AS REQUIRED BY STD. DWGS 2-D 248 AND 2-D 415.

3. CONNECTOR PIPES:
   PIPE MAY BE ON ANY ALIGNMENT AROUND THE WALLS OF THE MAIN BASIN CHAMBER AS SHOWN ON THE GENERAL PLAN. PIPE SHALL BE TRIMMED TO THE FINAL SHAPE AND LENGTH BEFORE THE PLACEMENT OF CONCRETE.

4. CONCRETE: DESIGN, f'c=3,000 psi COMPRESSIVE STRENGTH AT 28 DAYS. FLOOR OF THE BASIN SHALL SLOPE FROM ALL WALLS TO THE OUTLET AND SHALL BE GIVEN A STEEL-TROWELED FINISH SURFACE. STREET-SIDE WALLS OF THE BASIN SHALL BE POURED TO THE ELEVATION OF THE ADJACENT LOCAL DEPRESSION OR STREET SURFACE. CURVATURE OF THE SILL AND SIDE WALLS AT THE GUTTER OPENING SHALL BE FORMED BY CURVED FORMS; AND ALL EXPOSED EDGES, OR CORNERS, AND CONCRETE TO METAL FRAME EDGES SHALL BE GIVEN 1/4" RADIUS EDGER FINISH. SURFACE OF ALL EXPOSED CONCRETE SHALL CONFORM IN SLOPE, GRADE, COLOR, AND FINISH TO THE EXISTING, OR PROPOSED, CURB AND WALK ADJACENT TO THE BASIN.

5. REINFORCEMENT: (STANDARD DRAWING NO. 2-D 171)
   TOP SLAB - AS REQUIRED ON THE STRUCTURAL PLAN. WALLS AND FLOORS - AS REQUIRED BY STANDARD DRAWING NO. 2-D 172. REINFORCEMENT IN FRONT WALL, END WALLS AND FLOOR SHALL BE PER GRATING BASIN REINFORCEMENT WITH BASIN OPENING = C. REINFORCEMENT IN BACK WALL AND SWEEPER SHALL BE PER CURB OPENING BASIN WITH BASIN OPENING = W AND S, RESPECTIVELY.

6. DIMENSIONS: CURB FACE AT THE CATCH BASIN OPENING SHALL BE AS REQUIRED BY STD. DWGS. NOS. 2-D 248 AND 2-D 415 OR AS SHOWN ON THE GENERAL PLAN.
   b = 4'-6", OR AS SHOWN ON THE GENERAL PLAN.
   H = O INCHES WHEN NO L.D. IS USED.
   C = 2'-11 3/8" FOR ONE GRATING; ADD 3'-5 3/8" FOR EACH ADDITIONAL GRATING.
   t = 6 INCHES IF V = 5'-0" OR LESS; t = 8 INCHES IF V = 5'-1" OR MORE.
   V = 4'-6" OR AS SHOWN ON THE GENERAL PLAN TO V = 3'-4", MINIMUM.
   S = 4'-0", CASE A; S = 11'-0", CASE B, W = C+S.
   Y = VARIABLE TO 2'-4", MAXIMUM.

7. STEPS: (STANDARD DRAWING NO. 2-D 96)
   V TO 3'-0" (INCL.), PLACE ONE STEP 12 INCHES ABOVE THE FLOOR OF THE BASIN.
   V OVER 3'-0", PLACE STEPS AT 12-INCH INTERVALS FROM THE FLOOR OF THE BASIN WITH THE TOP STEP AT 12 INCHES (MINIMUM) BELOW THE TOP OF THE GRATE. CONSTRUCT STEPS ON FRONT WALL WHEN CONNECTOR PIPE IS ALIGNED TO DOWNSTREAM END WALL.

Supersedes drawing of the same number dated 1-13-'39

DRAWN BY	REVISIONS		
H. L. H.	MARK	DATE	DESCRIPTION
CHECKED BY D.W.H.	△1	6-25-68	Added note
	●	8-28-70	Revised location tie
DESIGNED BY G. J. P.	△2	2-1-74	#4 bar alternatives
	△3	2-18-75	Revised Note 5.
SUBMITTED BY C.W.H.			

LOS ANGELES COUNTY
FLOOD CONTROL DISTRICT

CATCH BASIN NO. 6 PLAN, SECTION & DETAILS

RECOMMENDED BY: C. E. Fabella, DIVISION ENGINEER (DESIGN)
APPROVAL RECOMMENDED BY: William W. Ramsey, ASS'T CHIEF DEPUTY ENGINEER
APPROVED BY: Walter J. Wood 7/24/68, CHIEF ENGINEER

SCALE	DATE	DWG. NO. 2-D109
NONE	5-15-'68	SHEET 1 OF 1

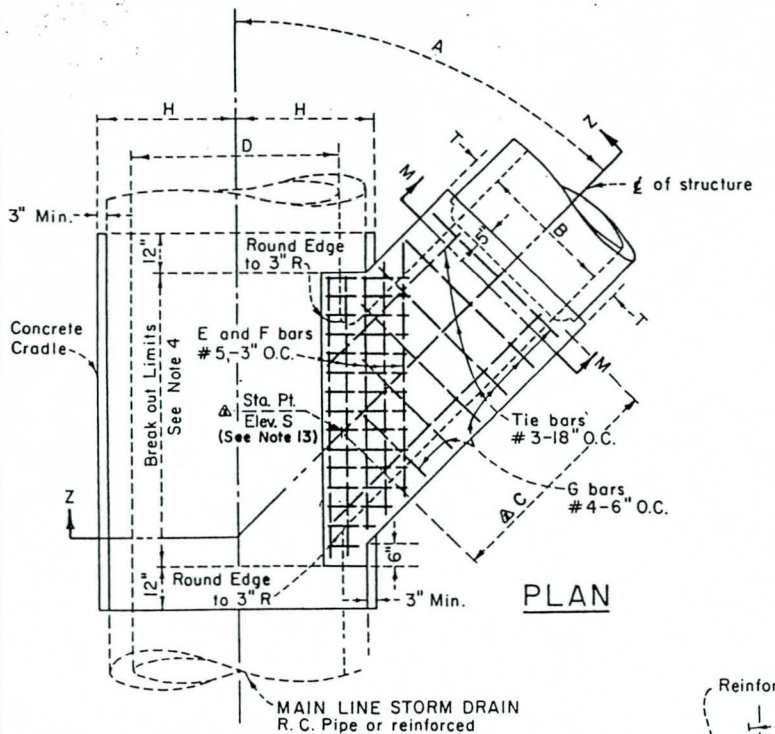

PLAN

TABLE OF VALUES FOR T	
B	T
12"	5"
15"	5"
18"	5"
21"	5"
24"	5½"
27"	5½"
30"	6"
33"	6½"
36"	6½"
39"	7"

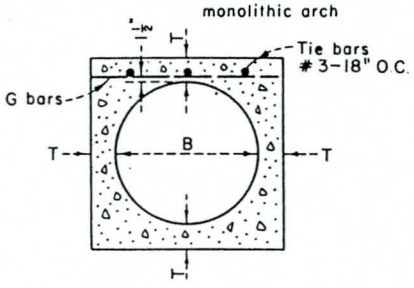

SECTION M-M

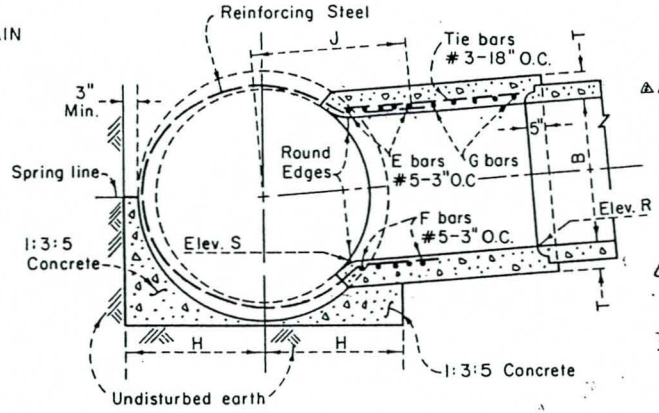

SECTION Z-Z

NOTES:

1. Junction Structure No. 2 is to be used when O.D. of B is greater than ½ the I.D. of D, or B is greater than 24 inches. B shall not exceed ¾ D, or 39 inches.
   NOTE: No more than one opening shall be made in one section of pipe.
2. ⚠⚠ Values of A, B, C and D are shown on project drawings. Elevation "R" and Elevation "S" are shown when required per Note 12.
3. ⚠ Elevation S applies at inside wall of structure.
4. Breakout limits shall be determined as follows:
   Upstream Limit – At the intersection of the outside of the spur wall with the main line pipe wall.
   Downstream Limit – 6 inches downstream of the intersection of the spur wall with the main line pipe wall.
   The opening shall be rectangular, cut normal to pipe surface and without damaging reinforcing steel. If a joint in the main line pipe falls within the limits of the concrete cradle, provide a concrete encasement one foot above the top of the main line pipe to the limits of the cradle.
5. The transverse reinforcement in pipe shall be cut at center of opening and bent into top and bottom slabs of spur.
6. ⚠4 The main line pipe shall be cradled and encased in 1:3:5 concrete mix, extending longitudinally 12 inches beyond the limits of breakout (See Note 4); and transversely a distance of H on each side of the centerline of pipe. H = ½ O.D. of pipe + 3 inches minimum.
   Cradle may be omitted on side opposite lateral inlet when constructed in connection with existing storm drain.
7. Reinforcing steel shall be per 2-D171, and placed 1½ inches clear from face of concrete, unless otherwise shown.
8. E and F bars shall be carried to a point not less than J distance from centerline. J = 7/12 D + 6 inches.
9. Concrete strength shall be 3,000 psi at 28 days except as otherwise noted.
10. Floor of structure shall be steel-troweled to spring line.
11. When Junction Structure No. 2 is specified with reinforced monolithic arch storm drain, value D shall refer to the clear span of the arch.
    Reinforcing steel shall be cut and bent into Junction Structure in the same manner as for pipe. Concrete cradle under reinforced monolithic arch is not required.
12. ⚠⚠ When Elevation "R" and Elevation "S" are not shown on project drawings, inlet pipe shall enter main line radially. When inlet pipe enters main line other than radially, Elevation "S" shall be shown on project drawings, and inlet pipe shall be laid on a straight grade from Elevation "S" to catch basin or grade break in line. Elevation "R" shall be shown on project drawings only when stub is to be provided in main line for future construction of inlet pipe.
13. Stations specified on drawings apply at the intersection of center lines ⚠ of main line and laterals, except that stations for catch basin connector pipe apply at inside wall of structure.
14. ⚠3 Use Transition Structure No. 3, Std. Dwg. 2-D188, when A.C. Pipe is used for mainline.

DRAWN BY	REVISIONS		
A. SH	MARK	DATE	DESCRIPTION
CHECKED BY K. O.	⚠	12-22-66	Revised Note 2 and added Note 12.
DESIGNED BY V.A.R.	⚠	10-31-68	Revised "C" Length, Sta. Pt. & Elev. 'S'
SUBMITTED BY C.W.H.	⚠3	12-8-69	ADDED NOTE 14
	⚠4	2-11-75	Revised Note 6

LOS ANGELES COUNTY FLOOD CONTROL DISTRICT

JUNCTION STRUCTURE NO. 2

RECOMMENDED BY C. F. Eshelby DIVISION ENGINEER - DESIGN

APPROVAL RECOMMENDED BY G. L. Cutland ASS'T CHIEF DEPUTY ENGINEER

APPROVED BY Walter J. Wood CHIEF ENGINEER

SCALE	DATE	DWG. NO. 2-D112
NONE	MAR., 1966	SHEET 1 OF 1

SUPERSEDES DRAWING OF THE SAME NUMBER DATED MAY, 1939

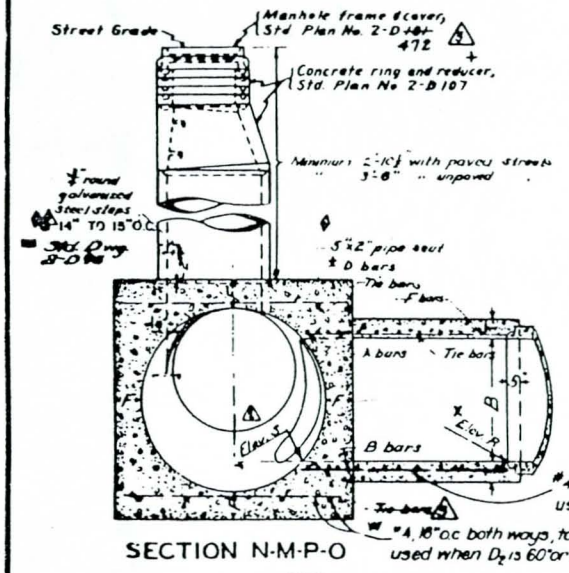

SECTION N-M-P-O

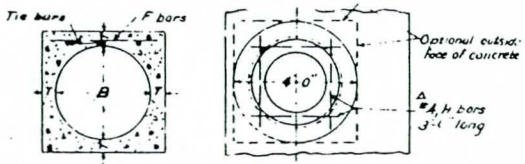

SECTION G-G

PLAN
(Rings and cover not shown)

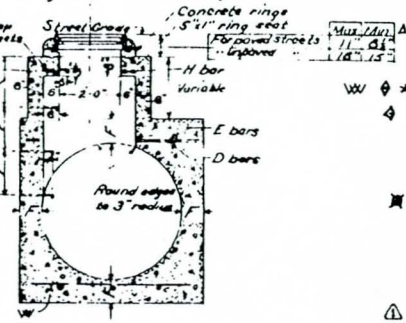

DETAIL M
(See note 5)

NOTES

1 - VALUES for A, B, C, D, D_2, Elevation R, and Elevation S are shown on the plan. TABLE of values for F and T thereon.

2 - LATERALS: If laterals enter on both sides of manhole, access shaft shall be located on side receiving the smaller lateral.

3 - CENTER OF MANHOLE SHAFT shall be located over center line of Storm Drain when D, is 48" or less, in which case place 4 E bars symmetrically around shaft 45° with centerline.

4 - LENGTH of manhole may be increased at option to meet pipe ends, but any change in location of spur must be approved by the District Engineer.

5 - DETAIL M: When depth of manhole from street to top of box is less than 2'-10" for paved streets or 3'-6" for unpaved streets, construct monolithic shaft as per Detail M. Construction of shaft as per Detail M for any depth of manhole is optional. When diameter D, is 48" or less, center of shaft shall be located as per Note 3.

6 - REINFORCING STEEL shall be per 2-D171, straight bars, 1½" clear from face of concrete unless shown otherwise. Tie bars shall be #3, and spaced 18" on centers or closer. Steel schedule detailed on plan.

7 - EMBEDMENT, P, shall be 5" for D_2 = 96" or less and 8" for D_2 over 96"

8 - STEPS shall be ⅝" round, galvanized steel and anchored not less than 6 inches in the walls of structure. Unless otherwise shown the spacing shall be 14" to 15" o.c. The lowest step shall be not more than 2 feet above the invert. Std. Dwg. 2-D96.

9 - RINGS, REDUCER, AND PIPE for access shaft shall be seated in 1:2 mix mortar and neatly pointed or wiped inside shaft.

11 - FLOOR of manhole shall be steel troweled to springing line.

12 - BODY of manhole, including spur, shall be poured in one continuous operation, except that a construction joint at the springing line with a longitudinal keyway is permitted.

13 - ELEVATION "S" applies at inside wall of structure.

14 - f'_c = 3000 psi at 28 days.

15. Where Pressure Manhole No. 4 is specified on plans see Std. Dwg. 2-D210 note 3.

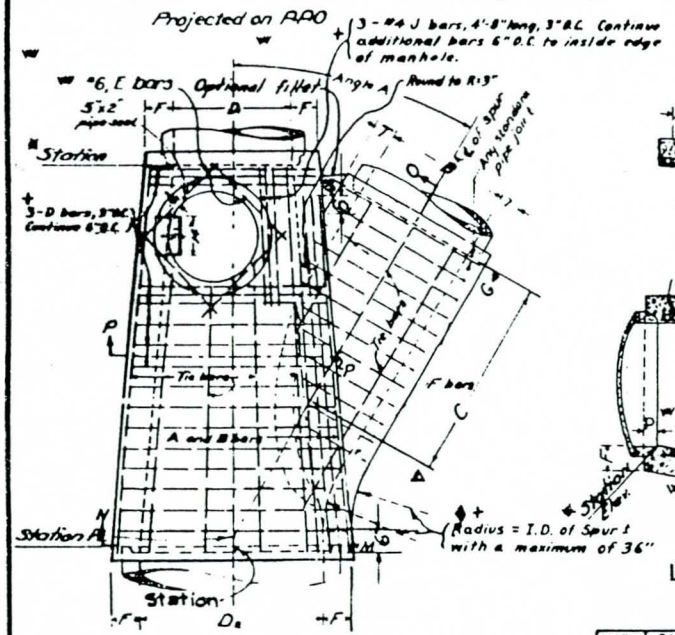

PLAN
(Shaft not shown)

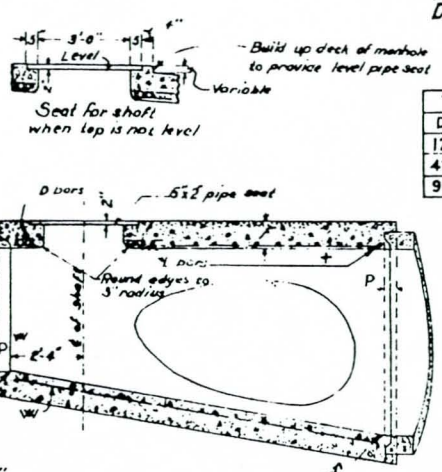

LONGITUDINAL SECTION

TABLE OF BAR SIZES		
D_2 or B	A & B Bars	D or F Bars
12"-39"	#5 @ 3"	#4 @ 6"
42"-84"	#6 @ 3"	#5 @ 6"
90"-144"	#7 @ 3"	#6 @ 6"

TABLE OF VALUES FOR F AND T						
D_2	F	B	T	B	T
36"	6½"	12"	4"	102"	15½"
39"	7"	15"	4½"	108"	16"
42"	7½"	18"	4½"	114"	16½"
45"	7½"	21"	5"	120"	17"
48"	8"	24"	5½"	126"	17"
51"	8½"	27"	5½"	132"	17½"
54"	9"	30"	6"	138"	17½"
57"	9½"	33"	6½"	144"	18"
60"	9½"	36"	6½"		
63"	10"	39"	7"		
66"	10½"	42"	7½"		
69"	10½"	45"	7½"		
72"	11"	48"	8"		
78"	11½"	51"	8½"		
84"	12½"	54"	9"		
90"	13½"	57"	9½"		
96"	14"	60"	9½"		
102"	15½"	63"	10"		
108"	16"	66"	10½"		
114"	16½"	69"	10½"		
120"	17"	72"	11"		
126"	17"	78"	11½"		
132"	17½"	84"	12½"		
138"	17½"	90"	13½"		
144"	18"	96"	14"		

REFERENCES
~~2-D181~~
2-D107
2-D171
2-D210
2-D96
2-D472

REVISIONS		
MARK	DATE	DESCRIPTION
*	4-46	CHANGED MIX
△	7-52	REVISED NO.
◊	12-52	REVISED
⊙	1-53	"
⋈	6-53	"
§	6-17-53	ADDED NOTE
+	7-29-53	REVISED
□	10-30-53	CHANGE DIMEN.
●	10-54	ADDED NOTES
✖	12-7-54	REVISED
✖	4-56	REVISED

REVISIONS		
MARK	DATE	DESCRIPTION
△	3-1-74	ADDED NOTE 1 STD.

REVISIONS		
MARK	DATE	DESCRIPTION
△	7-68	Rev. C length & ELEV. S.
△	11-9-70	Step Spacing

LOS ANGELES COUNTY FLOOD CONTROL DISTRICT

MANHOLE NO. 4
PLAN, SECTION, AND DETAIL

APPROVED BY H. C. Hedger, CHIEF ENGINEER

RECOMMENDED BY W. R. Hearne, OFFICE ENGINEER

CHIEF DESIGN ENG'R

DATE 5-31-39

NO. 2-D113

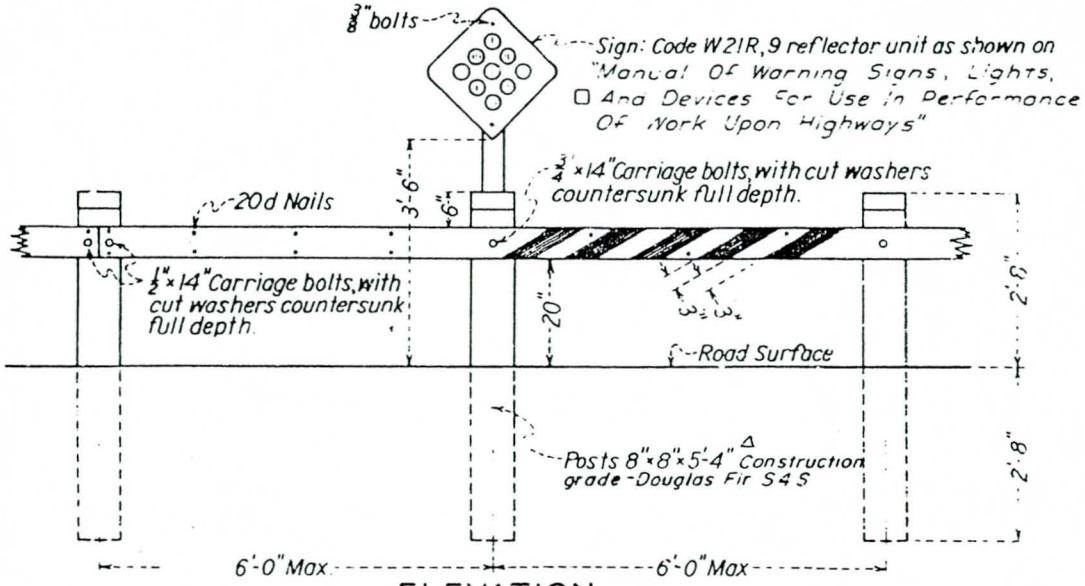

ELEVATION

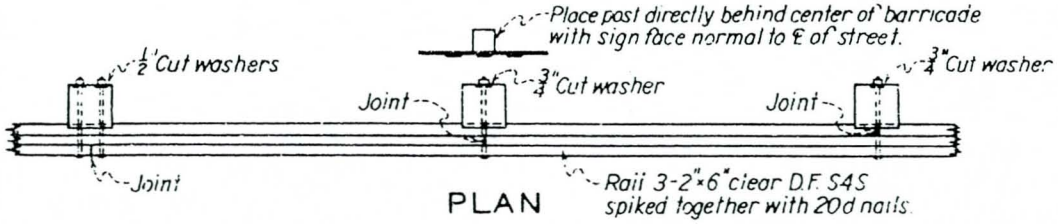

PLAN

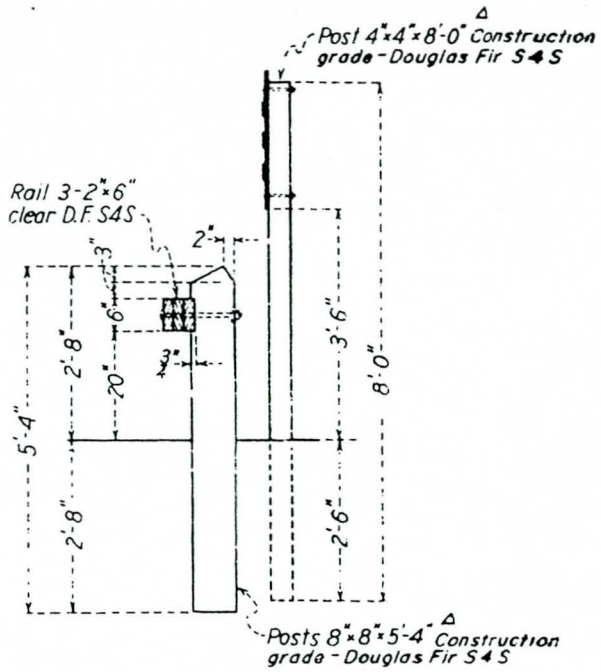

SIDE VIEW

NOTES

Bolts, washers and nuts shall be galvanized.
Bolt holes shall be same size as bolts.
Joints in rail shall be staggered as shown on the plan, one joint on each post.
Where the joint falls on outside face of rail, two 1/2" x 14" carriage bolts shall be used to fasten to post. Where the joint falls within the rail, one 3/4" x 14" carriage bolt shall be used.
Rails shall be painted with two coats of white lead and linseed oil.

The outside face of the rail shall then be painted over its entire length with diagonal 3 inch wide black stripes at 3 inch intervals.
Creosote all posts, in accordance with Section 204-2 of the Standard Specifications

REFERENCES	REVISIONS			LOS ANGELES COUNTY FLOOD CONTROL DISTRICT
	MARK	DATE	DESCRIPTION	WOODEN LAMINATED RAIL STREET BARRICADE
	*	1-19-51	Change 1/4" dim. to 1/2" dim.	
	△	10-6-58	Changed post material & added treatment note.	APPROVED BY H. E. Hedger 7/1/60 CHIEF ENGINEER
	□	9-24-66	Revised	
	⊙	1-22-69	Revised (NOTE)	
SUBMITTED BY M.G.T.	RECOMMENDED W. B. Kearns DIVISION ENGINEER			DATE JUNE 1948 NO 2-D152 SHEET 1 OF 1

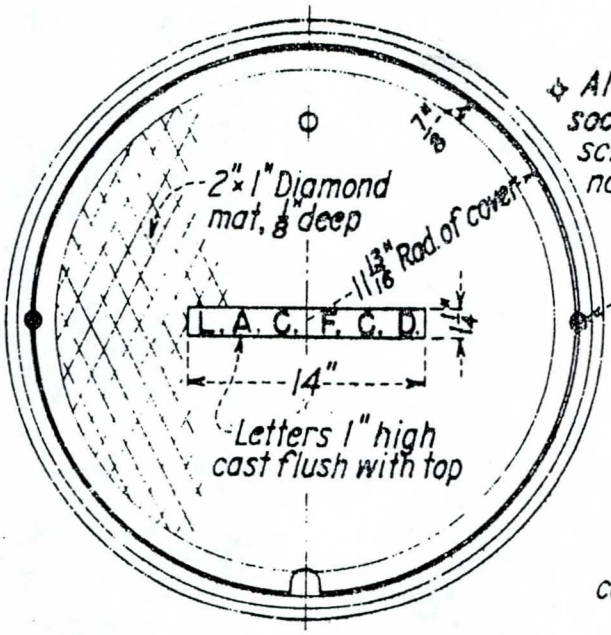

TOP OF MANHOLE FRAME & COVER

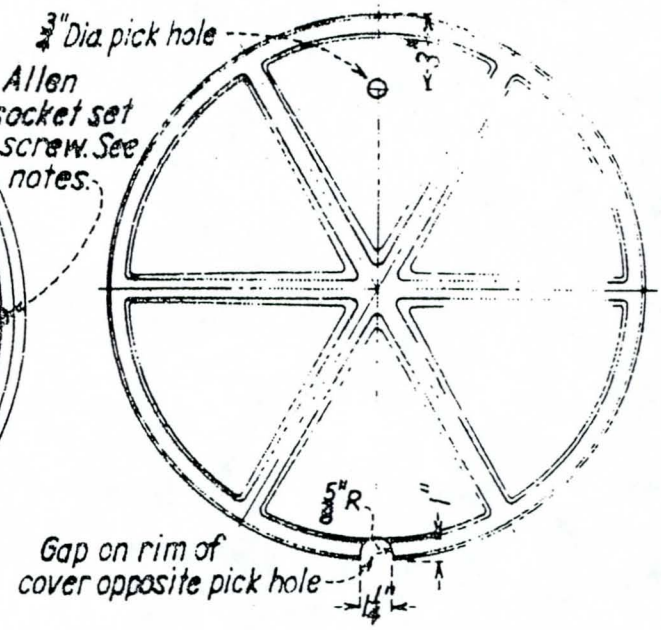

BOTTOM OF MANHOLE COVER

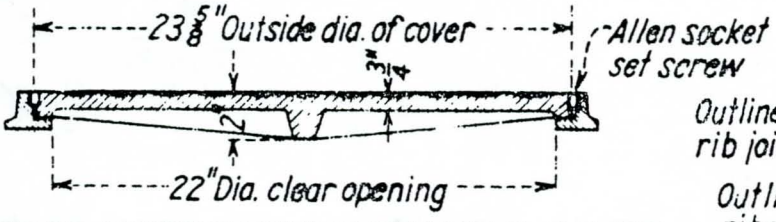

CROSS SECTION THRU FRAME & COVER

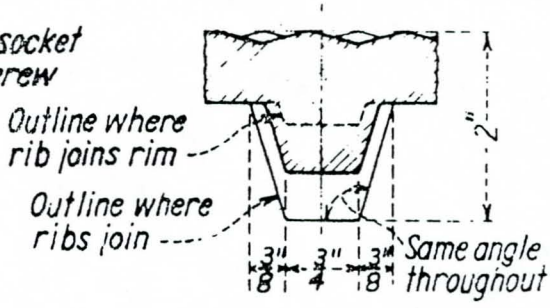

CROSS SECTION THRU RIB AT MID RADIUS

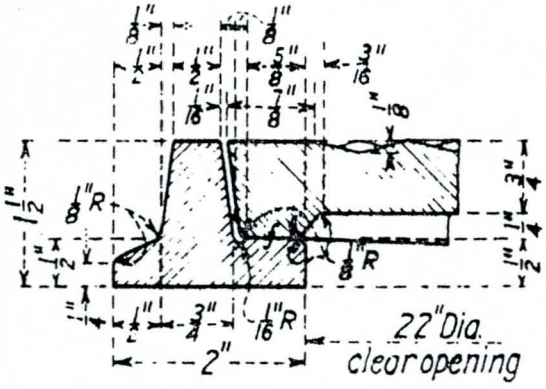

CROSS SECTION THRU RIM

✧ NOTES

Frame and cover shall be gray cast iron conforming to the latest A.S.T.M. standard A 48, class 30 or better.

Install two 3/4" × 3/4" Allen socket set screws, 90° to pick hole, in holes drilled and tapped 1" in depth.

All parts of the frame and cover except machined surfaces shall be coated with asphaltum paint.

Frame and cover shall be tested for accuracy of fit and shall be marked in sets before delivery.

△ Frame and cover shall be positioned such that the identification lettering is parallel with and readable from the street side of the curb.

REFERENCES	REVISIONS			LOS ANGELES COUNTY FLOOD CONTROL DISTRICT
	MARK	DATE	DESCRIPTION	MANHOLE FRAME AND COVER FOR CATCH BASINS
	✧	6-29-54	Revised all notes	
	△	6-19-68	Added note	APPROVED BY R. E. Hedgpeth CHIEF ENGINEER
SUBMITTED BY M. C. T.	RECOMMENDED BY DIVISION ENGINEER (DESIGN)			DATE JAN 1949 — NO. 02-D156 — SHEET 1 OF

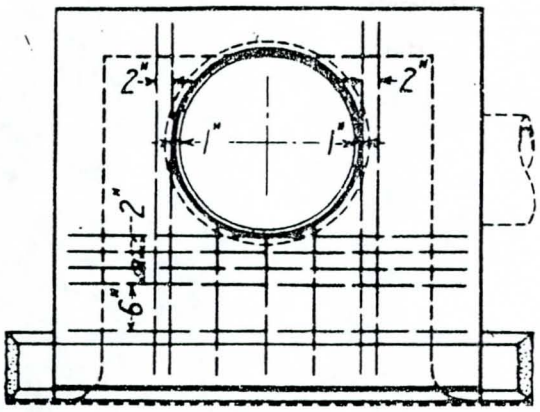

STEEL ARRANGEMENT
FOR TOP OF CATCH BASIN NO. 1

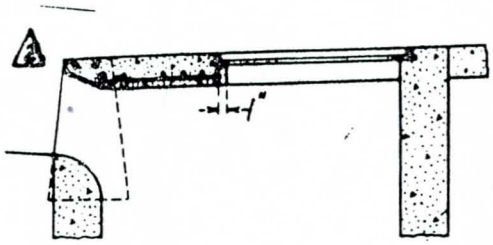

TYPICAL SECTION THROUGH
CATCH BASIN AT MANHOLE

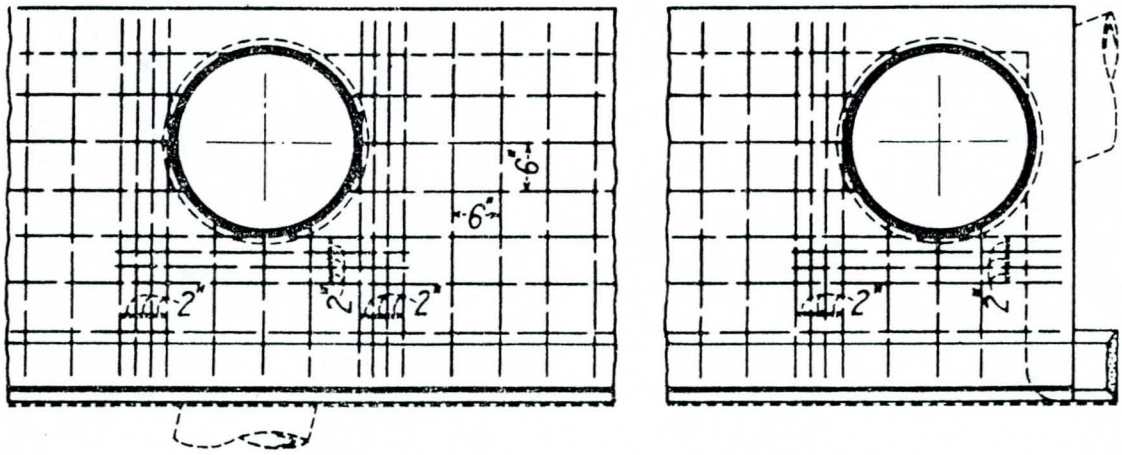

STEEL ARRANGEMENT AROUND MANHOLE
IN CATCH BASINS NO. 2 AND NO. 3

NOTES

1. Manhole shall be placed along back wall near outlet.
*2. All steel shall be #3 bars, spaced and dimensioned as called for on the catch basin standard plans unless shown differently hereon. Clearance shall be 1 inch from bottom of slab.
5 3. No. 4 bars @ 12" may be used in lieu of No. 3 bars @ 6"
No. 4 bars @ 2" may be used in lieu of No. 3 bars @ 2"

REFERENCES	REVISIONS			LOS ANGELES COUNTY FLOOD CONTROL DISTRICT
2-D171 1	MARK	DATE	DESCRIPTION	CATCH BASIN REINFORCEMENT FOR ROUND MANHOLES
	*	7-52	Changed bar size to bar number per 2-D171.	
	1	12-52	Added reference	
	2	5-7-68	Revised	
	3	2-1-74	#4 Bars alternate note	
				APPROVED BY H. E. Hedden 3/24/49 CHIEF ENGINEER
SUBMITTED BY M. C. T.	RECOMMENDED BY DIVISION ENGINEER (DESIGN)			DATE JAN 1949 NO. 2-D157 SHEET 1 OF 1

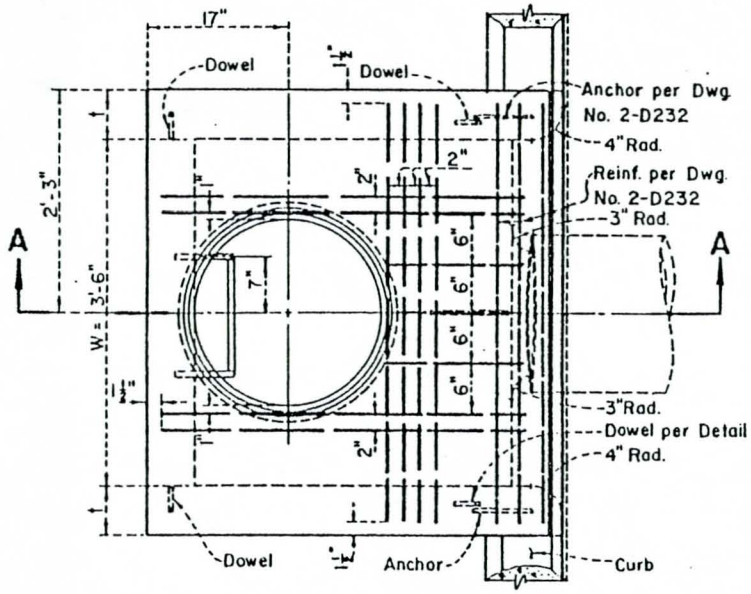

TOP SLAB - STRUCTURAL PLAN

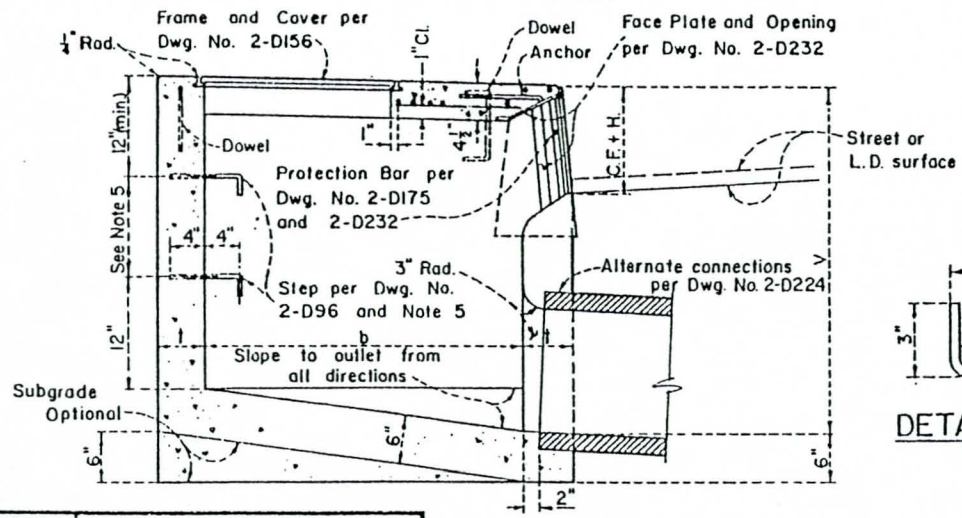

SECTION A-A

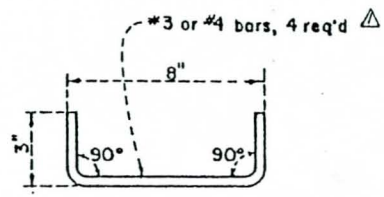

DETAIL OF DOWEL

NOTES

1. CONNECTOR PIPE:
   Locate pipe on any alignment around the walls of the basin as shown on the general plan.
   Pipe shall be trimmed to the final shape and length before the placement of concrete.
2. CONCRETE:
   Design; f'_c = 3,000 psi compressive strength at 28 days.
   Floor of the basin shall slope from all walls to the outlet and shall be given a steel-troweled surface finish.
   Curvature of the sill and side walls at the gutter opening shall be formed by curved forms.
   Surface of all exposed concrete shall conform in slope, grade, color, and finish to the existing, or proposed, curb and walk adjacent to the basin.
3. REINFORCEMENT: (Std. Dwg. No 2-D171)
   △ Top Slab - No. 3 or No. 4 bars required as spaced on the Structural Plan.
   Walls and Floor - As required by Standard Drawing No. 2-D172.
4. DIMENSIONS:
   Curb face at catch basin opening (Exist. C.F.+H) shall be as required by Standard Drawings Nos. 2-D88, 2-D415, or as shown on the general plan.
   V = 3'-6", t = 6 inches, and b = 3'-2" unless otherwise shown.
5. STEPS: (Std. Dwg. No. 2-D96)
   V to 3'-0" (incl.), place one step 12 inches above the floor of the basin.
   V over 3'-0", place steps at 12-inch intervals from the floor of the basin with the top step at 12 inches (minimum) below the top surface of the top slab.

Supersedes drawing of the same number dated Aug. 1950

DRAWN BY	REVISIONS		
S.Y.H.	MARK	DATE	DESCRIPTION
CHECKED BY D.W.H.	△	2-1-74	#4 bar alternative
DESIGNED BY G.J.P.			
SUBMITTED BY C.W.H.			

LOS ANGELES COUNTY
FLOOD CONTROL DISTRICT

CATCH BASIN NO. 1
PLAN, SECTION, AND DETAILS

RECOMMENDED BY C. E. Caldwell, DIVISION ENGINEER IMPROV.
APPROVAL RECOMMENDED BY Phillip W. Ramsom, ASS'T CHIEF DEPUTY ENGINEER
APPROVED BY Walter J. Wood 7/24/68, CHIEF ENGINEER

SCALE	DATE	DWG. NO. 2-D 160
NONE	5-15-'68	SHEET 1 OF 1

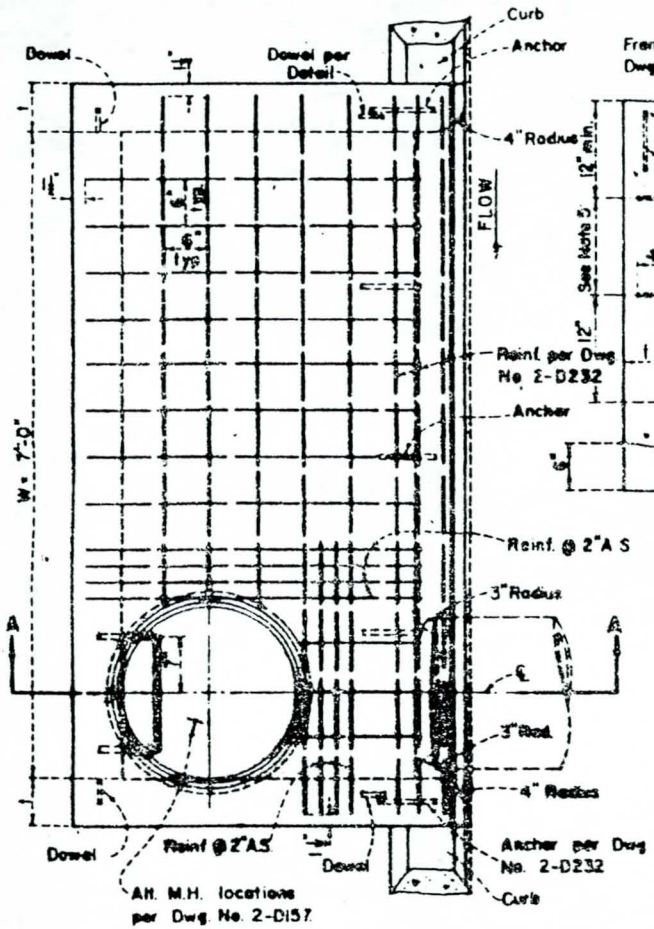

TOP SLAB - STRUCTURAL PLAN

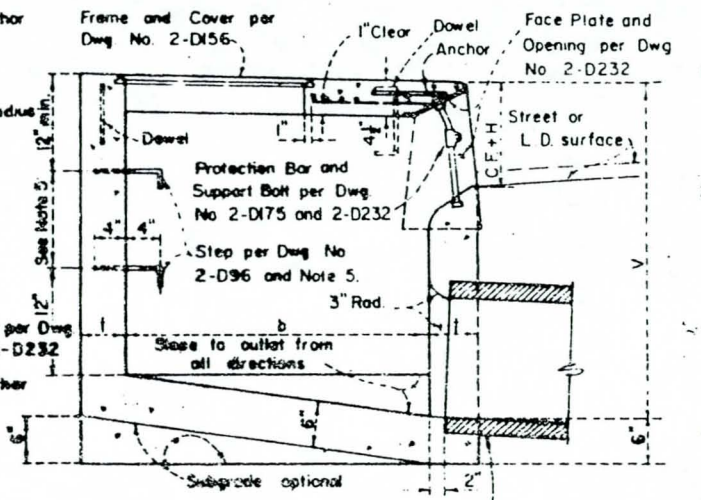

SECTION A-A

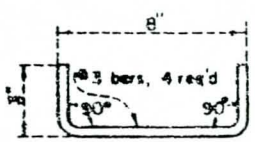

DETAIL OF DOWEL

NOTES

1. CONNECTOR PIPE:
   Locate pipe at the downstream end of the basin unless specifically noted otherwise on the general plan.
   Pipe shall be trimmed to the final shape and length before the placement of concrete.
2. CONCRETE:
   Design, f'_c = 3,000 psi compressive strength at 28 days.
   Floor of the basin shall slope from all walls to the outlet and shall be given a steel-troweled surface finish.
   Curvature of the sill and side wall at the gutter opening shall be formed by curved forms; and all exposed edges, or corners, and concrete to metal frame edges shall be given ½" radius edger finish.
   Surface of all exposed concrete shall conform in grade, slope, color and finish to the existing, or proposed, curb and walk adjacent to the basin.
3. REINFORCEMENT: (Standard Dwg. No. 2-D171)
   Top slab - No. 3 bars as required on the Top Slab Structural Plan.
   Walls and Floor - As required by Standard Dwg. No. 2-D172.
4. DIMENSIONS:
   Curb Face at the catch basin opening (Exist. C.F.+H.) shall be as required by Std. Dwg. Nos. 2-D88, 2-D415, or as shown on the general plan.
   b = 3'-2", unless otherwise shown.
   t = 6 inches if V = 4'-0" or less.
   t = 8 inches if V = 4'-1" to 8'-0"
   t = 10 inches if V = 8'-1" or more
   V = 4'-0" unless otherwise shown on the general plan.
5. STEPS: (Std. Dwg. No. 2-D96)
   V to 3'-0" (incl.), place one step 12 inches above the floor of the basin.
   V over 3'-0", place steps at 12-inch intervals from the floor of the basin with the top step at 12 inches (minimum) below the top of the manhole.

Supersedes drawing of the same number dated August 1950.

DRAWN BY	REVISIONS		
SYH	MARK	DATE	DESCRIPTION
CHECKED BY D.W.H			
DESIGNED BY G.J.P			
SUBMITTED BY C.W.H			

LOS ANGELES COUNTY
FLOOD CONTROL DISTRICT

CATCH BASIN NO. 2
PLAN, SECTION
& DETAILS

RECOMMENDED BY: C.F. Schelling, DIVISION ENGINEER - MAINT.
FINAL RECOMMENDATION BY: [illegible], CHIEF ENGINEER
APPROVED BY: [illegible], CHIEF ENGINEER

SCALE: NONE | DATE: 5-15-68 | DWG. NO. [illegible] | SHEET 1 OF 1

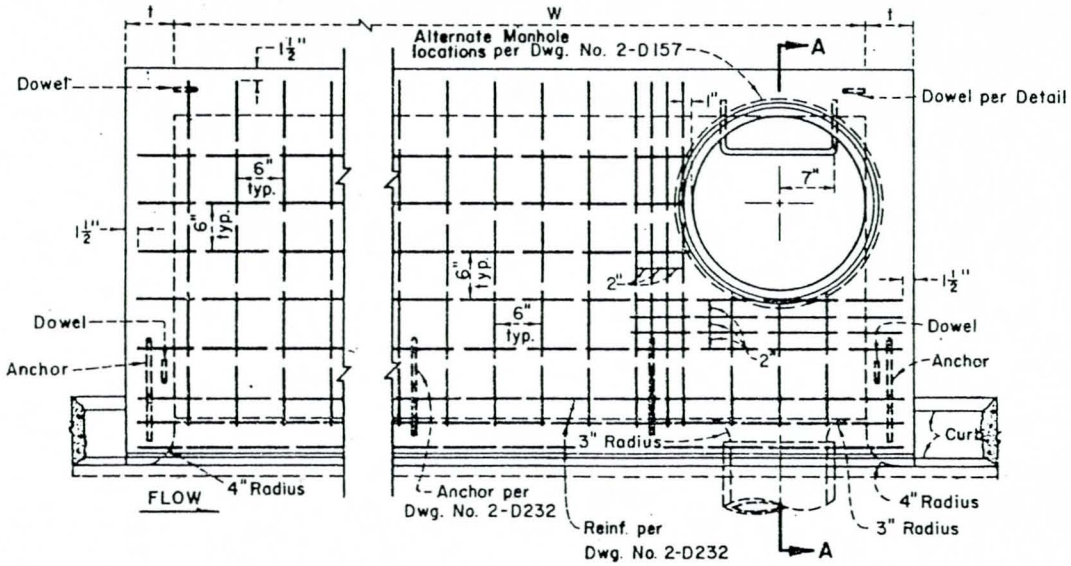

TOP SLAB – STRUCTURAL PLAN

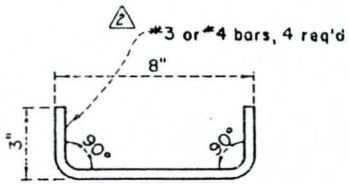

DETAIL OF DOWEL

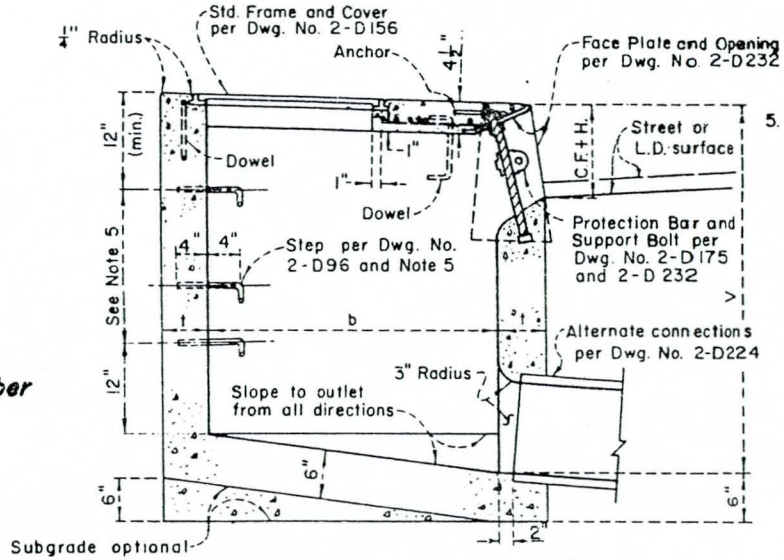

SECTION A-A

NOTES

1. CONNECTOR PIPE:
   Locate pipe at the downstream end of the basin unless specifically noted otherwise on the general plan.
   Pipe shall be trimmed to the final shape and length before the placement of the concrete.
2. CONCRETE:
   Design, f'_c = 3,000 psi compressive strength at 28 days.
   Floor of the basin shall slope from all walls to the outlet and shall be given a steel-troweled surface finish.
   Curvature of the sill and the side walls at the gutter opening shall be formed by curved forms.
   Surface of all exposed concrete shall conform in grade, slope, color, and finish to the existing, or proposed, curb and walk adjacent to the basin.
3. REINFORCEMENT: (Std. Dwg. No. 2-D171)
   2 Top Slab – No. 3 or No 4 bars spaced as required on the Structural Plan.
   Walls and Floor – As required by Std. Dwg. No. 2-D172.
4. DIMENSIONS:
   Curb face at catch basin opening (Exist. C.F.+H.) shall be as required by Std. Dwgs. Nos. 2-D 88, 2-D415 or as shown on the general plan.
   Catch basins for W = 10 feet or more shall have a "V" depth at the upstream end equal to the curb face at the catch basin plus 12 inches, 1 but in no case shall the slope of the floor exceed 3:1
   W = 14'-0"; and b = 3'-2", unless otherwise shown.
   V = 4'-0", unless otherwise shown.
   t = 6" if V = 4'-0" or less.
   t = 8" if V = 4'-1" to 8'-0".
   t = 10" if V = 8'-1" or more.
5. STEPS: (Std. Dwg. No. 2-D 96)
   V to 3'-0" (incl.), place one step 12 inches above the floor of the basin.
   V over 3'-0", place steps at 12-inch intervals from the floor of the basin with the top step at 12 inches (minimum) below the top surface of the top slab.

Supersedes drawing of the same number dated Aug. '50

DRAWN BY	REVISIONS		
A.S.H.	MARK	DATE	DESCRIPTION
CHECKED BY D.W.H.	1	2-1-'71	Addition to Note 4
DESIGNED BY G.J.P.	2	2-1-74	#4 bar alternative
SUBMITTED BY C.W.H.			

LOS ANGELES COUNTY FLOOD CONTROL DISTRICT

CATCH BASIN NO. 3 PLAN, SECTION, AND DETAILS

RECOMMENDED BY G. E. Eckelberry DIVISION ENGINEER (DESIGN)

APPROVAL RECOMMENDED BY William A. Kanaan ASST. CHIEF DEPUTY ENGINEER

APPROVED BY Walter J. Wood 7-24-68 CHIEF ENGINEER

SCALE	DATE	DWG. NO. 2-D163
NONE	5-15-'68	SHEET 1 OF 1

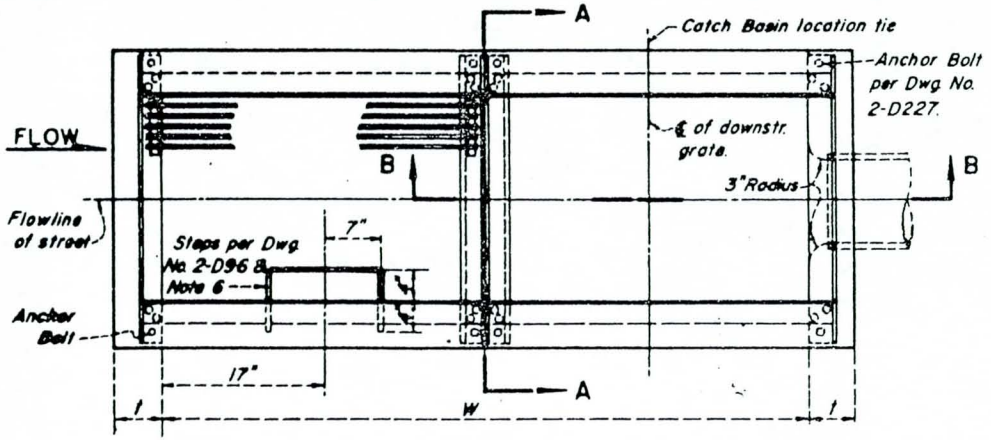

PLAN

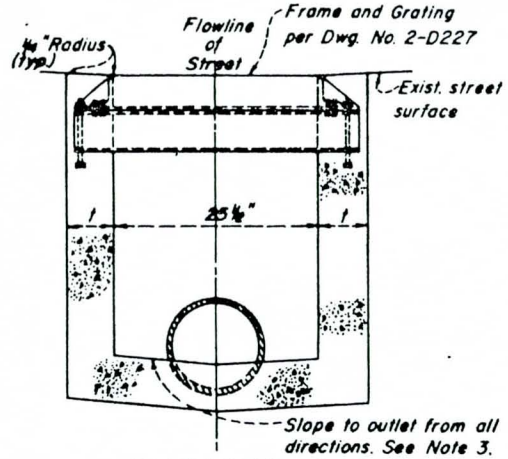

SECTION A-A

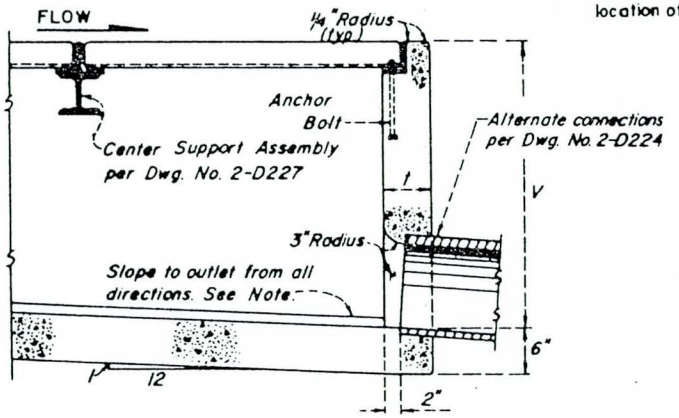

SECTION B-B

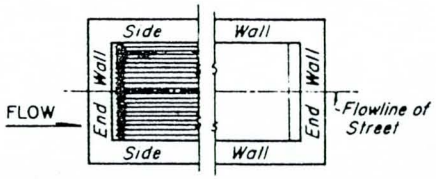

BASIN AND GRATING ALIGNMENT PLAN

NOTES

1. GRATINGS:
   One grating is required unless otherwise shown on the general plan.
2. CONNECTOR PIPE:
   Pipe shall be located at the floor and downstream end of the basin unless specifically noted otherwise on the general plan. Pipe shall be trimmed to final length and shape before the placement of concrete.
3. CONCRETE: Design, f'_c=3,000 psi, compressive strength at 28 days.
   Floor of the basin shall slope from all walls to the outlet and shall be given a steel-troweled finished surface.
   Walls of the basin chamber shall be poured to the elevation and slope of the existing street surface.
4. REINFORCEMENT: (Standard Drawing No. 2-D171)
   Walls and Floor — As required by Standard Drawing No. 2-D172.
5. DIMENSIONS:
   V=3'-0", unless otherwise shown.
   W=2'-11⅜" for one grate, add 3'-5⅜" for each additional grate.
   t=6 inches if V=4'-0" or less; t=8 inches if V=4'-1" to 8'-0"; t=10 inches if V=8'-1" or more.
6. STEPS: (Standard Drawing No. 2-D96)
   V to 3'-0" (incl.), place one step 12 inches above the floor of the basin.
   V over 3'-0", place steps at 12-inch intervals from the floor of the basin with the top step at 12 inches (minimum) below the top of the grate.
   Construct steps on opposite side wall when connector pipe is aligned to drawing location of steps.

Supersedes drawing of the same number dated AUG. 1950

DRAWN BY	REVISIONS		
H.L.H.	MARK	DATE	DESCRIPTION
CHECKED BY D.W.H.			
DESIGNED BY G.J.P.			
SUBMITTED BY C.W.H.			

LOS ANGELES COUNTY FLOOD CONTROL DISTRICT

CATCH BASIN NO. 5 PLAN, SECTION, & DETAILS

RECOMMENDED BY: C. E. Eckelberry, DIVISION ENGINEER, INDUSTRIAL

APPROVAL RECOMMENDED BY: William W. Crawford, ASST. CHIEF DEPUTY ENGINEER

APPROVED BY: Walter J. Wood 5/24/68, CHIEF ENGINEER

SCALE	DATE	DWG. NO. 2-D164
NONE	5-15-'68	SHEET 1 OF 1

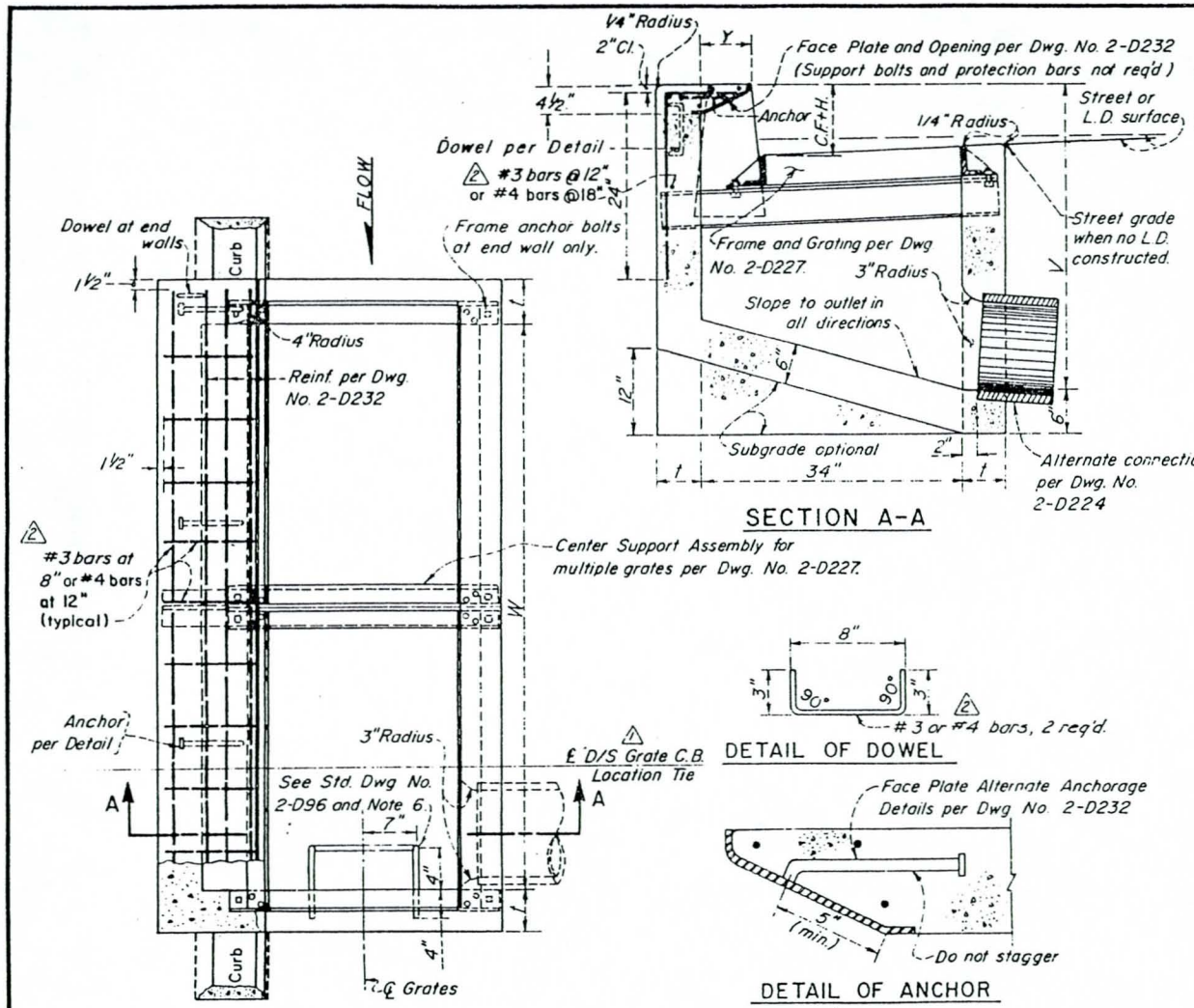

NOTES

1. GRATING: One grating required unless otherwise shown on the general plan. Position grating and support assembly as required by Std. Dwgs. Nos. 2-D248 and 2-D415.
2. CONNECTOR PIPE: Locate pipe at downstream end of basin unless specifically noted otherwise on the general plan. Pipe shall be trimmed the final shape and length before the placement of the concrete.
3. CONCRETE: Design, f'_c = 3000 psi compressive strength at 28 days. Floor of the basin shall slope from all walls to the outlet and shall be given a steel-troweled finish. Street-side walls of the basin shall be poured to the elevation of the adjacent local depression or street surface. Curvature of the end walls at the gutter opening shall be formed by curved forms. Surface of all exposed concrete shall conform in slope, grade, color, and finish to the existing, or proposed, curb and walk adjacent to the basin.
4. REINFORCEMENT: (Std. Dwg. No 2-D171)
   Top Slab - As required on the structural plan.
   Walls and Floor - As required by Standard Drawing No. 2-D172.
5. DIMENSIONS:
   Curb face at the catch basin opening shall be as required by Standard Drawings Nos 2-D248, and 2-D415, or as shown on the general plan.
   V = 3'-6", unless otherwise shown on the general plan.
   W = 2'-11 3/8" for one grating and add 3'-5 3/8" for each additional grating.
   Y = variable to 8 1/2 inches maximum.
   t = 6 inches if V is 4'-0" or less; t = 8 inches if V is 4'-1" to 8'-0"
   t = 10 inches if V is 8'-1" or more.
   H = 0 inches when no L.D. is constructed.
6. STEPS: (Std. Dwg. No. 2-D96)
   V to 3'-0" (incl.), place one step at 12 inches above the floor of the basin.
   V over 3'-0", place steps at 12-inch intervals from floor of basin to a minimum of 12 inches below top of the grating.
   Construct steps on front wall when connector pipe is aligned to downstream end wall.

Supersedes drawing of the same number dated June '52

REVISIONS		
MARK	DATE	DESCRIPTION
1	8-28-70	Added location tie
2	2-1-74	#4 bars alternatives

DRAWN BY H.L.H.
CHECKED BY D.W.H.
DESIGNED BY G.J.P.
SUBMITTED BY C.W.H.

LOS ANGELES COUNTY
FLOOD CONTROL DISTRICT

CATCH BASIN NO. 7
PLAN, SECTION, & DETAILS

RECOMMENDED BY G. E. Eckelberry, DIVISION ENGINEER - DESIGN
APPROVAL RECOMMENDED BY Milton W. Kramer, ASS'T CHIEF DEPUTY ENGINEER
APPROVED BY Walter J. Wood 7/24/68, CHIEF ENGINEER

SCALE	DATE	DWG. NO. 2-D170
NONE	5-15-'68	SHEET 1 OF 1

CONCRETE REINFORCING STEEL INSTITUTE

STANDARD A615△ REINFORCING BARS

BAR SIZES		WEIGHT	NOMINAL DIMENSIONS – ROUND SECTIONS		
OLD (INCHES)	NEW (NUMBERS)	POUNDS PER FOOT	DIAMETER INCHES	CROSS SECTIONAL AREA–SQ. INCHES	PERIMETER INCHES
1/4	2	.167	.250	.05	.786
3/8	3	.376	.375	.11	1.178
1/2	4	.668	.500	.20	1.571
5/8	5	1.043	.625	.31	1.963
3/4	6	1.502	.750	.44	2.356
7/8	7	2.044	.875	.60	2.749
1	8	2.670	1.000	.79	3.142
1	9	3.400	1.128	1.00	3.544
1 1/8	10	4.303	1.270	1.27	3.990
1 1/4	11	5.313	1.410	1.56	4.430

The new bar numbers are based on the number of 1/8 inches included in the nominal diameter of the bar.

Bar number 2 in plain rounds only. Bars numbered 9, 10 and 11 are round bars and equivalent in weight and nominal cross-sectional area to the old type 1", 1 1/8 and 1 1/4 square bars

LOS ANGELES COUNTY FLOOD CONTROL DISTRICT

△ Revised 1-19-71

DATE - JULY, 1952

2-D171

W OF C.B.	V(ft.) From	V(ft.) To (incl.)	t (in)	FRONT WALL STEEL Hor.	FRONT WALL STEEL Vert.	REAR & END WALLS & FLOOR STEEL Each Way
to 7'		4	6	#3 @6"	#3 @6"	# 3 @ 6"
to 7'	4	8	8	#4 @12"	#4 @12"	# 4 @ 12"
to 7'	8	12	10	#4 @10"	#4 @10"	# 4 @ 10"
14'		4	6	#3 @6"	#3 @6"	# 3 @ 6"
14'	4	8	8	#4 @12"	#4 @12"	# 4 @ 12"
14'	8	10	10	#4 @8"	#4 @12"	# 4 @ 10"
14'	10	12	10	#4 @6"	#4 @12"	# 4 @ 10"

WALL AND FLOOR STEEL

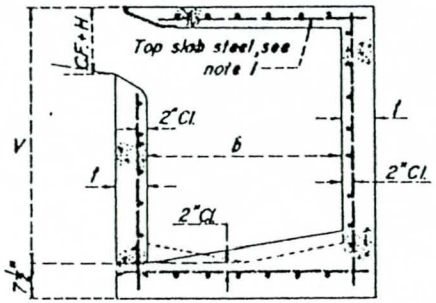

SECTION 1

CATCH BASIN REINFORCEMENT—"W" to 14' (Incl.)

V(ft.) From	V(ft.) To (incl.)	t (in)	FRONT WALL STEEL Bars A & B	REAR WALL STEEL Bars C	REAR WALL STEEL Bars D	REAR WALL STEEL Bars E	END WALL STEEL Hor. & Vert.
	4	6	# 3 @ 24"	#3 @12"	—	#4 @24"	# 3 @ 18"
4	5	8	# 3 @ 20"	#3 @12"	—	#4 @24"	# 3 @ 14"
5	6	8	# 3 @ 12"	#3 @10½"	—	#4 @24"	# 3 @ 14"
6	7	8	# 4 @ 17"	#3 @8½"	—	#4 @24"	# 3 @ 14"
7	8	8	# 4 @ 13"	#3 @6½"	—	#4 @24"	# 3 @ 14"
8	9	10	# 4 @ 15"	#3 @7½"	—	#4 @20"	# 3 @ 11"
9	10	10	# 4 @ 12"	#4 @12"	—	#4 @20"	# 3 @ 11"
10	11	10	# 5 @ 15"	—	#4 @ 11"	#4 @18"	# 3 @ 11"
11	12	10	# 6 @ 18"	—	#4 @ 9"	#4 @13"	# 3 @ 11"
	X=(V+t)-(C.F.+H+4½")				Y=(X/2 —) + 15 dia - 2"		

WALL AND FLOOR STEEL

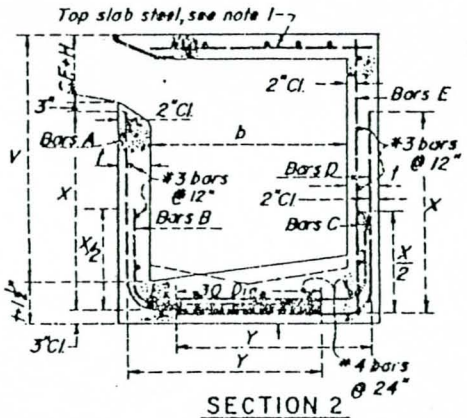

SECTION 2

CATCH BASIN REINFORCEMENT—"W" GREATER THAN 14'

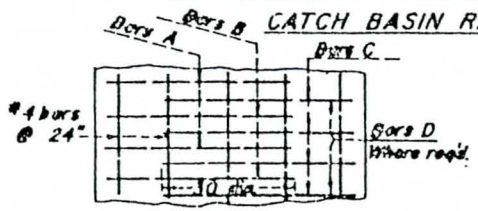

FLOOR REINFORCEMENT SECTION 2

V(ft.) From	V(ft.) TO (incl.)	t (in)	SIDE & END WALL STEEL BARS G
	4	6	# 3 @ 6"
4	8	8	# 4 @ 6"
8	12	10	# 5 @ 6"

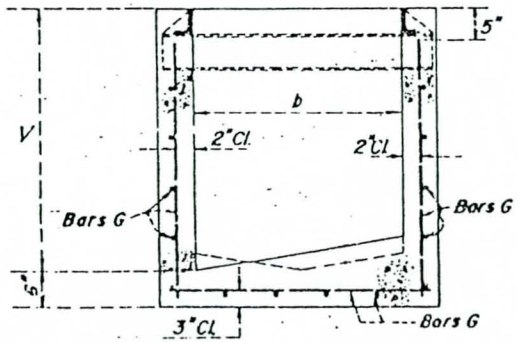

GRATING BASIN REINFORCEMENT

NOTES

1. TOP SLAB REINFORCEMENT:
   For detailing of required steel, see Catch Basin Standard Drawings.
   For dimension "b" greater than 4 ft., see the special design of the top slab reinforcement shown on the required structural plan.
2. WALL AND FLOOR REINFORCEMENT:
   The indicated reinforcing steel applies to Catch Basin Standard ⚠ Drawings No. 2-D101, 109, 160, 162, 163, 164, 170, 195, 249.1 and 2, and 471.
   All catch basins constructed on streets designated as State Highways shall include the reinforcing steel shown on this drawing.
   Catch basins constructed on streets not designated as State Highways under the following conditions require wall and floor steel reinforcement: ⚠2

Basin Opening (W, C or S)	Basin Depth (V)
To 7 feet (incl.)	10 feet or more
7 to 14 feet (incl.)	7 feet or more
14 to 21 feet (incl.)	6 feet or more
over 21 feet	All

3. GENERAL:
   Steel reinforcement shall be per Standard Drawing No. 2-D171.
   Steel to concrete surface, end clearance, shall be 1½ inches.
   Valley type invert, shown by dashed line in Section, required when connector pipe is aligned to end wall of a catch basin.
   For the design of catch basins with a V-depth exceeding 12 feet, see the required structural plans.

⚠ No. 4 bars may be used in lieu of No. 3 bars as follows:

TABLED VALUE	ALTERNATE	TABLED VALUE	ALTERNATE
# 3 @ 2"	# 4 @ 2"	—	—
# 3 @ 6"	# 4 @ 10"	# 3 @ 12"	# 4 @ 18"
# 3 @ 6½"	# 4 @ 12"	# 3 @ 14"	# 4 @ 24"
# 3 @ 7½"	# 4 @ 14"	# 3 @ 18"	# 4 @ 24"
# 3 @ 8½"	# 4 @ 16"	# 3 @ 20"	# 4 @ 24"
# 3 @ 10½"	# 4 @ 18"	# 3 @ 24"	# 4 @ 24"
# 3 @ 11"	# 4 @ 18"	—	—

SUPERSEDES drawing of same number dated July 1952

DRAWN BY	REVISIONS		
H.L.H.	MARK	DATE	DESCRIPTION
CHECKED BY D.W.H.	⚠	11-14-73	ADDED C.B. #9 AND #4 BARS ALTERNATE NOTE
DESIGNED BY R.J.S.	⚠	2-20-73	ADDED (C or S)
SUBMITTED BY C.W.H.			

LOS ANGELES COUNTY
FLOOD CONTROL DISTRICT

CATCH BASIN
REINFORCEMENT

RECOMMENDED BY: C.F. Fehlberg, DIVISION ENGINEER (ENGINEER)
APPROVAL RECOMMENDED BY: Walter W. Ramsey, ASST. CHIEF DEPUTY ENGINEER
APPROVED BY: Thomas J. Wood Dennis, CHIEF ENGINEER

SCALE	DATE	DWG. NO.
NONE	5-15-'68	2-D172 SHEET 1 OF 1

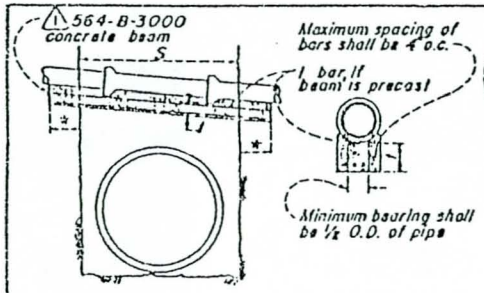

CASE 1
REINFORCED CONCRETE BEAM

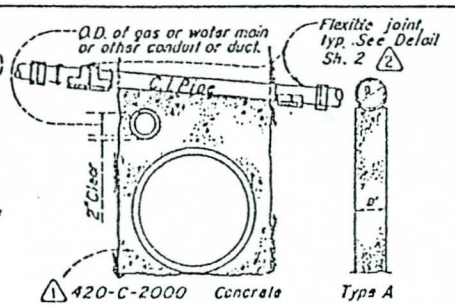

CASE 2
CONCRETE SUPPORT WALL

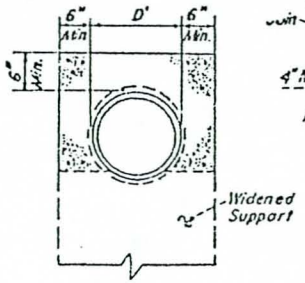

ENCASEMENT DETAIL
FOR SANITARY SEWERS ⊠

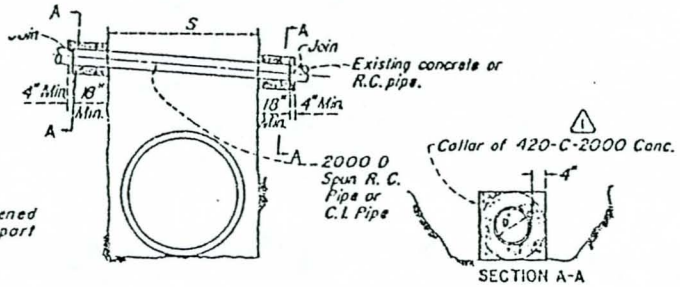

CASE 3
CAST IRON PIPE OR SPUN REINFORCED
CONCRETE PIPE

* See table on this sheet for minimum length of bearing.

GENERAL NOTES:

⊠ △ ① 1. In the case of sanitary sewer supports per Case 1, 2 or 5, or per sheet 2 of this standard, the sewer shall be encased per the Encasement Detail for Sanitary Sewers, and the support shall be widened to the width of the encasement and lengthened to fully support such encasement.

2. Any of the cases shown on this standard may be used at the contractor's option unless otherwise shown on the project drawing.

3. The minimum lengths of bearing shown at the ends of R.C. Beams, cast-iron and steel pipes shall be increased if so directed by the Engineer.

4. "S" in all cases equals the span of the pipe support measured along its centerline between the sides of the trench or to centerlines of column supports.

CASE 1 NOTES:

1. Width of beam shall be outside diameter of pipe plus 2".
2. Reinforcing steel shall be placed 1 1/2" clear from sides and bottom of beams.
3. If beams are precast, ends of beams shall be bedded in 1 420-C-2000 concrete to edge of trench.
4. Class "C" mortar shall be placed between top of beams and bottom of pipe to give bearing.

CASE 2 NOTES:

1. Supporting wall shall have a firm bearing on the subgrade and against the sides of the excavation.
2. Wall shall be at least 2" free and clear of gas or water main or other conduit or duct.
3. Either Type A or Type B cross section may be used at the contractor's option.
4. Whenever so directed by the engineer, the contractor shall pierce the wall with suitable openings to prevent unequal pressure resulting from flooding the backfill. The volume of the pierced openings shall not exceed 1/3 the volume of the supporting wall.

CASE 3 NOTES:

1. Class 2000-D spun reinforced concrete pipe of the same diameter as existing pipe may be used only where width of trench is 5'-0" or less.

DIMENSIONS OF
REINFORCED CONCRETE BEAM

S or C	DEPTH OF COVER 0'–8'0" t	BAR NO.	8'1"–16'0" t	BAR NO.	16'1"–25'0" t	BAR NO.
4	8"	4	8"	4	9 1/2"	5
5	8"	4	9"	5	11"	5
6	8 1/2"	5	10 1/2"	5	12 1/2"	6
7	9"	5	11 1/2"	6	13 1/2"	6
8	10"	5	12 1/2"	6	15"	7
9	11"	6	13 1/2"	6	16 1/2"	7
10	12"	6	15"	7	18"	7
11	13"	6	16"	7	19 1/2"	8
12	13 1/2"	6	17"	7	21"	8
13	14 1/2"	7	18 1/2"	7		
14	15 1/2"	7	20	8		
15	16 1/2"	7	21"	8		
16	17 1/2"	7				
17	18 1/2"	8				
18	19 1/2"	8				

Minimum Lengths Of Bearing Of Ends Of R.C. Beams

Depth of Cover	S	Min. Bearing
0'–8'0"	0'–19'0"	18"
8'1"–16'0"	0'–12'0"	18"
	12'1"–15'0"	24"
16'1"–25'0"	0'–7'0"	18"
	7'1"–10'0"	24"
	10'1"–12'0"	30"

ALLOWABLE SPANS FOR CAST IRON PIPE

DEPTH of COVER	CLASS 150 PIPE INSIDE DIAMETER 6"	8"	10"	CLASS 250 PIPE INSIDE DIAMETER 6"	8"	10"
0'–8'0"	8'-6"	11'-0"	13'-0"	8'-6"	11'-6"	13'-0"
8'1"–16'	6'-6"	8'-0"	10'-0"	6'-6"	8'-6"	10'-6"
16'1"–25'	5'-0"	6'-0"	8'-0"	5'-0"	6'-6"	8'-6"

This drawing replaces drawing 2-D173, dated September, 1952.

REVISIONS			REFERENCES	REVISIONS		
MARK	DATE	DESCRIPTION		MARK	DATE	DESCRIPTION
1	4-72	Revised Concrete Designation			1-53	Revised Added cases
2	1-76	Flexible joint			3-55	Revised Cases 1, 2, 3 and 4
				①	6-20-62	Added Gen. Note
				△	10-10-62	Revised Gen. Note 1
				⊠	7-15-63	Added Encasement Detail & rev. Gen. Note 1

SUBMITTED BY [signature]
RECOMMENDED BY [signature]
DIVISION ENGINEER (ELECTRIC)

LOS ANGELES COUNTY
FLOOD CONTROL DISTRICT

PIPE SUPPORTS
ACROSS TRENCHES

APPROVED BY [signature]
CHIEF ENGINEER

NOT TO SCALE | DATE JAN 55 | NO. 2-D173.1 | SHEET 1 OF 3

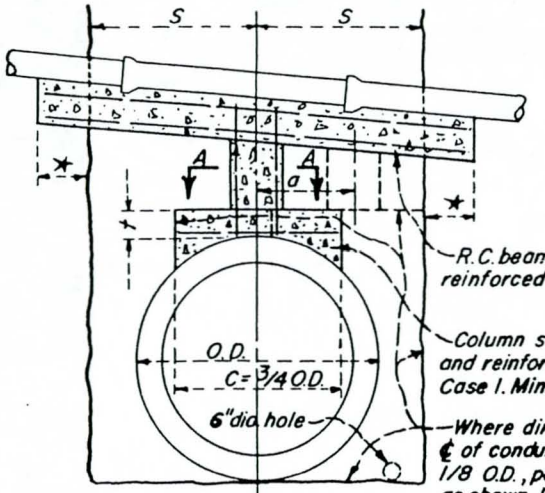

PIPE CONDUIT

R.C. beam dimensioned and reinforced per table under Case 1.

Column support beam dimensioned and reinforced per table under Case 1. Minimum thickness 12".

Where dimension "a" measured from ℄ of conduit to ℄ of column exceeds 1/8 O.D., pour wall to side of trench as shown. Use same reinforcement and wall thickness as with centrally placed column.

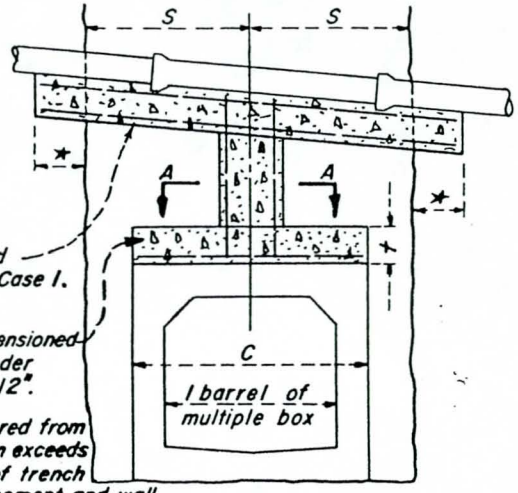

BOX CONDUIT

★ See table on Sheet 1 for minimum lengths of bearing.

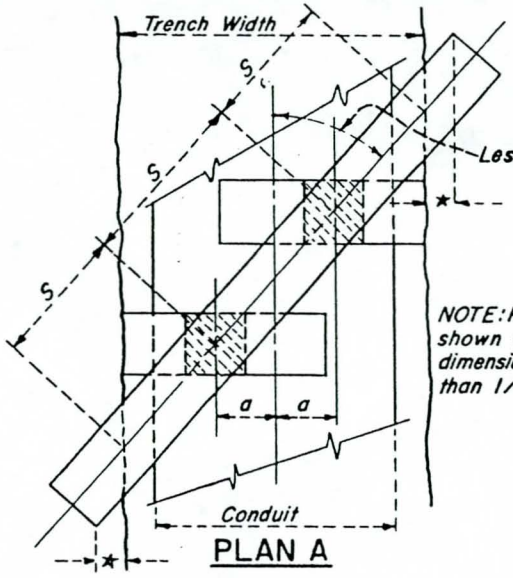

PLAN A

NOTE: Pipe conduit shown with "a" dimension greater than 1/8 O.D.

COLUMN SUPPORT WITH REINFORCED CONCRETE BEAM

NOTES

1. One or more column supports may be used. Span "S" shall not exceed the values tabulated under Case 1.
2. C = span of column support beam measured normal to conduit.
3. When the pipe to be supported crosses the trench on a skew angle of less than 45°, each column shall be supported by a beam constructed at right angles to the trench. See PLAN A.
4. Columns placed directly over interior walls of multiple boxes may be supported per DETAIL B.
5. Columns falling on one span of a multiple barrel box shall be supported over that span only.
6. All reinforcing steel shall be 1-1/2" from sides, edges, and bottom of beams and columns.
7. All concrete shall be 564-B-3000, except as noted.

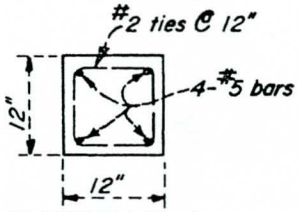

SECTION A-A

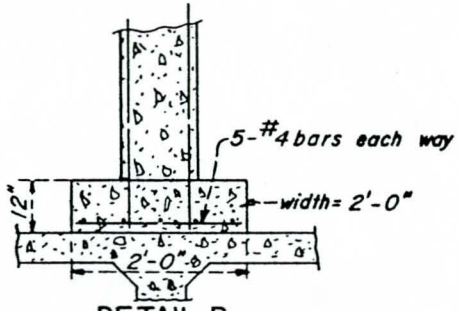

DETAIL B

COLUMN SUPPORT OVER INTERIOR WALL OF MULTIPLE BOX

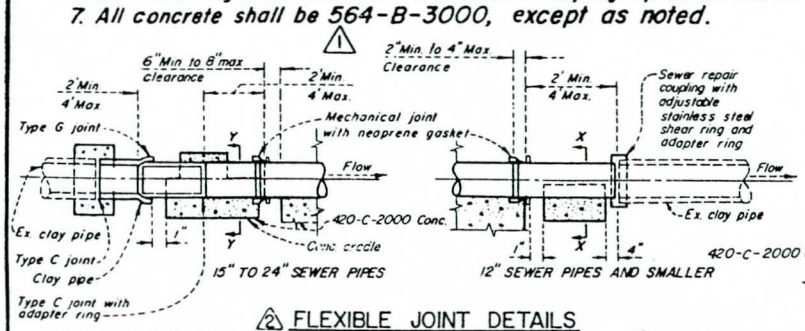

△2 FLEXIBLE JOINT DETAILS

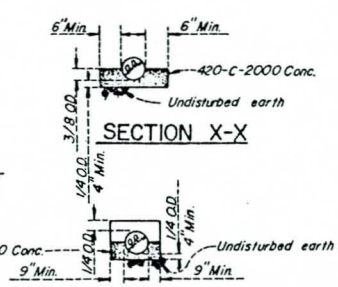

SECTION X-X

SECTION Y-Y

ALL DETAILS EXCEPT MECHANICAL JOINT SYMETRICAL ABOUT ℄ OF CONSTRUCTION

REFERENCES	REVISIONS			LOS ANGELES COUNTY FLOOD CONTROL DISTRICT
	MARK	DATE	DESCRIPTION	PIPE SUPPORTS ACROSS TRENCHES
	△	1-55	Revised. Added cases.	
		2-55	Change 2 to 3	
		3-55	Revised Cases 1, 2, 3 and 4	
	△1	4-72	Revised concrete designation	
	△2	1-76	Flexible joint	
SUBMITTED BY	RECOMMENDED BY DIVISION ENGINEER (DESIGN)			APPROVED BY CHIEF ENGINEER
	NOT TO SCALE	DATE JAN.55	NO. 2-D173.2 SHEET 2 OF 3	

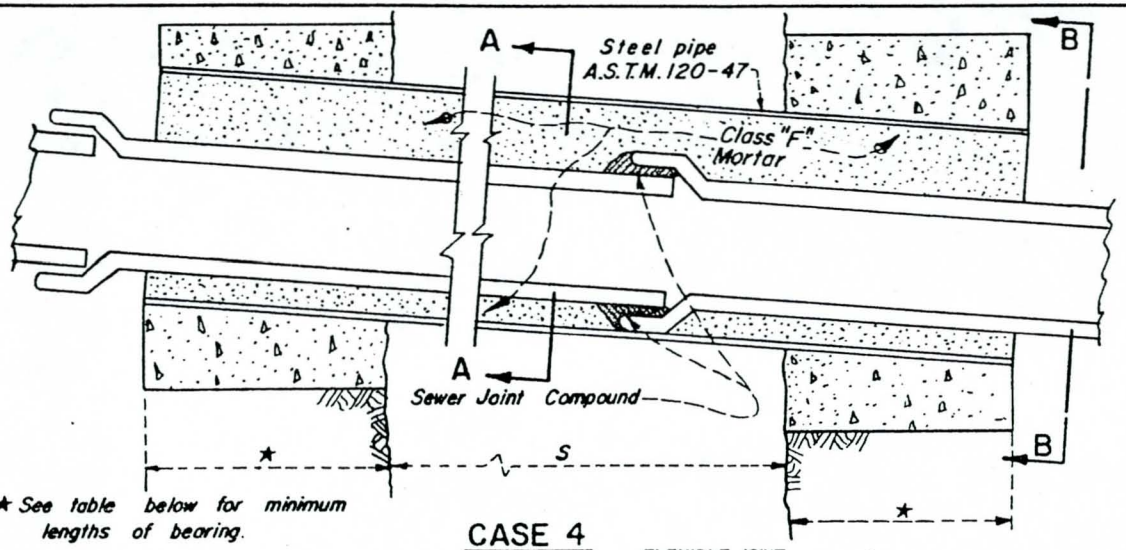

★ See table below for minimum lengths of bearing.

CASE 4

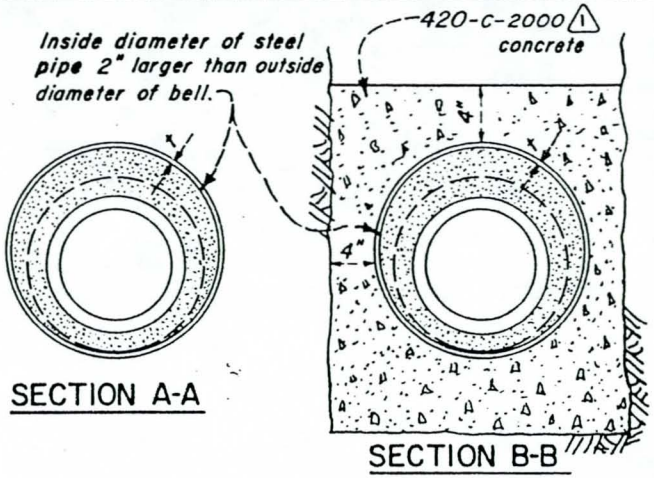

SECTION A-A

SECTION B-B

STEEL PIPE
ALLOWABLE SPAN (S) IN FEET

DEPTH of COVER	t = SHELL THICKNESS				
	1/8	1/4	3/8	1/2	5/8
0-8'	13	17½	23	27½	30
8'-16'	9	13½	17	20	22½
16'-25'	7	10½	13	15½	18

Minimum Length Of Bearing Of End Of Pipe

Depth of Cover	S	Min. Bearing
0'-8'0"	0'-30'	18"
8'1"-16'0"	0'-22.5'	18"
16'1"-25'0"	0'-11'	18"
	11'1"-15'	24"
	15'1"-18'	30"

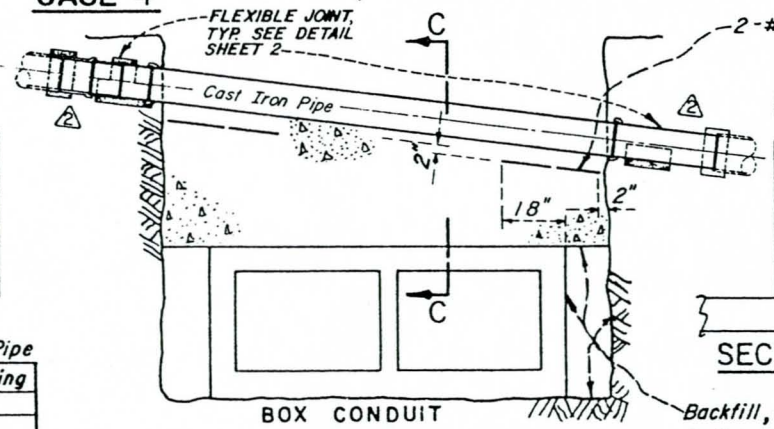

BOX CONDUIT

CASE 5

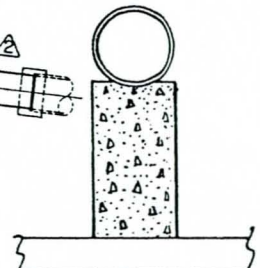

SECTION C-C

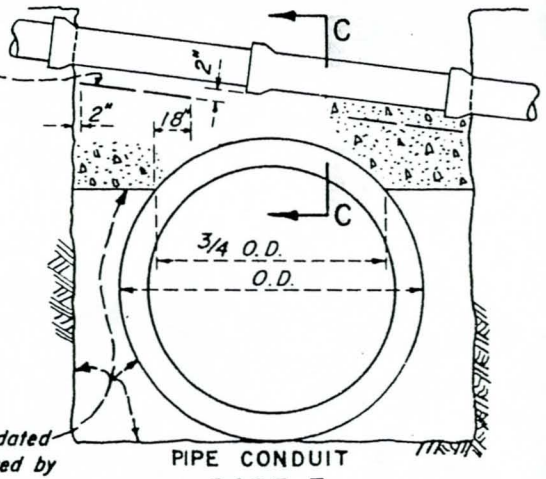

Backfill, compacted or consolidated to the relative density required by the specifications.

PIPE CONDUIT

CASE 5

CASE 5 △ NOTES:

1. The concrete support wall shall be constructed according to the details and notes shown for Case 2, sheet 1 except as otherwise shown.
2. All concrete shall be 420-C-2000 △1

REFERENCES	REVISIONS			LOS ANGELES COUNTY FLOOD CONTROL DISTRICT
	MARK	DATE	DESCRIPTION	PIPE SUPPORTS ACROSS TRENCHES
	△	1-55	Revised. Added cases.	
		2-55	Changed 7 to 5	
		3-55	Revised Cases 1, 2, 3 and 4	
	△1	4-72	Revised concrete designation	
	△2	1-76	Flexible joint	

APPROVED BY — CHIEF ENGINEER

SUBMITTED BY — RECOMMENDED BY — DIVISION ENGINEER (DESIGN)

NOT TO SCALE | DATE JAN. 55 | NO. 2-D173.3 | SHEET 3 OF 3

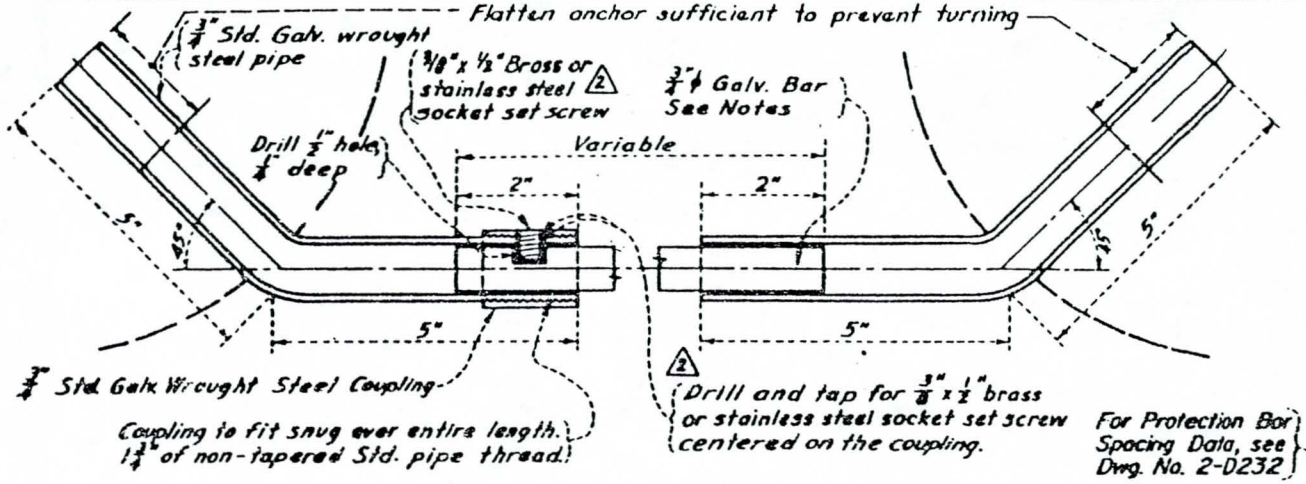

DETAIL OF ANCHOR

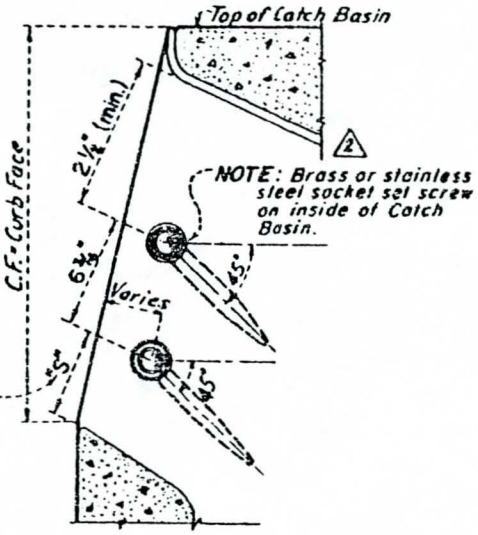

SECTION SHOWING LOCATION OF ANCHOR AT WALL OF CATCH BASIN

For Protection Bar Spacing Data, see Dwg. No. 2-D232

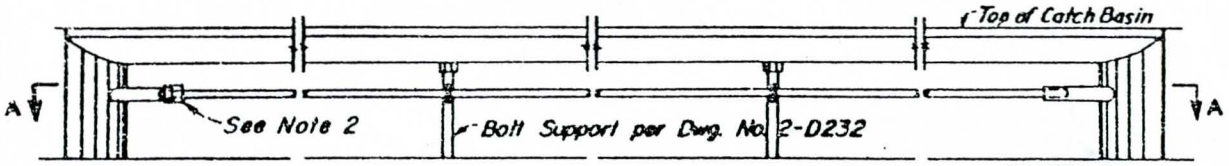

ELEVATION

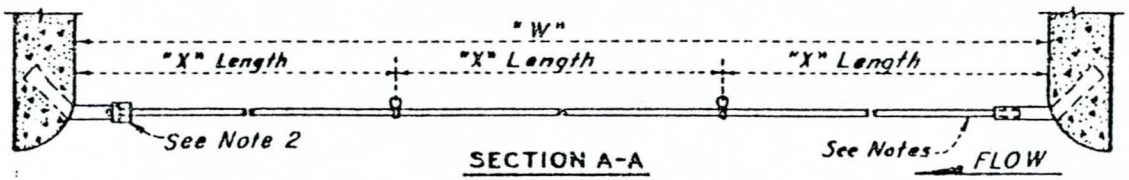

SECTION A-A

"W" (incl.)	NUMBER OF SUPPORT BOLTS	NUMBER OF "X" LENGTHS
5' to 10'	1	2
10' to 15'	2	3
15' to 20'	3	4
20' to 25'	4	5
25' to 30'	5	6

NOTES:

1. All bars shall be 3/4" Galv., hot-rolled steel per A.S.T.M. Designation A-36. Bar lengths shall not exceed 21', and shall be cut to fit in field. When "W" is over 21', protection bar shall consist of two or more sections depending upon length of basin. Location of special support bars and additional (2) ~~brass~~ socket set screw shall be determined by the Engineer in the field.
2. Install coupling at downstream end of catch basin opening.

(1) Supersedes Drawing of same number dated Aug 5, '68 (Rev. 10-46-68)
~~Superseded by drawing of the same number dated Aug 5, '68~~

SUPERSEDES DRAWING OF THE SAME NUMBER DATED OCT. 1952.

REFERENCES	REVISIONS			LOS ANGELES COUNTY FLOOD CONTROL DISTRICT
	MARK	DATE	DESCRIPTION	
2-D232	(1)	2-21-69	Revised Note	REMOVABLE PROTECTION BAR FOR CATCH BASINS
	(2)	11-16-73	Brass or stainless steel set screw	

SUBMITTED BY C.W.H. | RECOMMENDED BY G. F. Cadelina, DIVISION ENGINEER-DESIGN | APPROVED BY Eugene Dietz, CHIEF ENGINEER | DATE 5 15 '68 | NO 2-D175 | SHEET 1 OF 1

CASE I

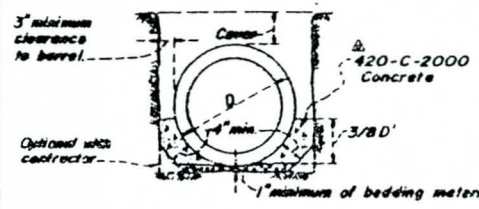

1. CASE I BEDDING (Load Factor 2.1)

shall be used where specified on plans or where required as an alternative to Case II or Case III Bedding as provided herein. Case IV Bedding shall be used instead of Case I against sheeting or unstable trench sides if so required by the Engineer.

CASE II
VITRIFIED CLAY AND PLAIN CONCRETE PIPE

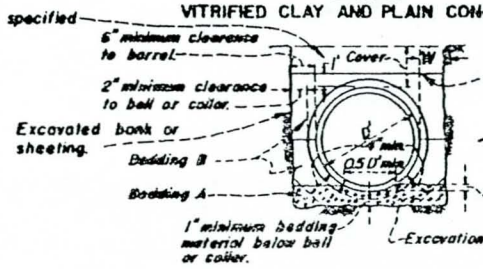

2. CASE II BEDDING & BACKFILL AROUND PIPE (Load Factor 1.8)

● (a) "W" at springing line shall not be less than 6" for any depth of trench. This dimension may include the thickness of any sheeting.

(b) Where cover is 8' or less, "W" measured at top of pipe may be any dimension greater than 6".

(c) Where cover is greater than 8', "W" measured at top of pipe shall not be greater than 8" unless the contractor at his own expense provides Case I bedding or stronger pipe. The stated 8" includes the thickness of any sheeting.

CASE III
REINFORCED CONCRETE PIPE

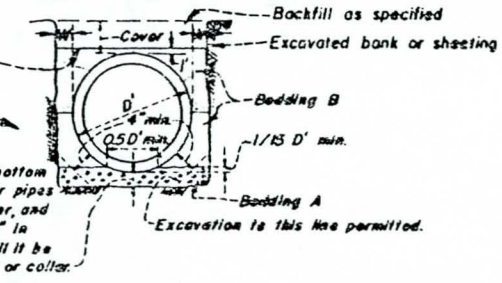

3. CASE III BEDDING & BACKFILL AROUND PIPE (Load Factor 1.6)

(a) "W" at springing line shall not be less than the following: 6" for pipe 60" or less in diameter, 10" for pipe 63" to 108" inclusive in diameter, and 12" for pipe larger than 108" in diameter. These dimensions may include the thickness of any sheeting.

(b) Where cover is 10' or less, "W" measured at the top of the pipe may be any dimension greater than the above specified minimum, unless otherwise specified on the project drawing.

(c) Where cover is greater than 10' "W" measured at the top of the pipe shall not be greater than 10" for pipe 108" in diameter or less, or 12" for pipe over 108" in diameter unless the contractor at his own expense provides Case I bedding or stronger pipe. These dimensions include the thickness of any sheeting.

CASE IV

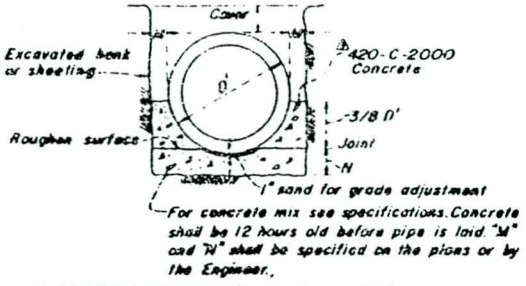

4. CASE IV BEDDING (Load Factor 3.0)

Where required by the Engineer as an alternative to Case I or Case V to meet conditions arising during construction.

5. CASE V BEDDING (Load Factor 2.7)

shall be used where specified on the plans. Case IV Bedding shall be used instead of Case V against sheeting or unstable trench walls if so required by the Engineer.

3-Edge Bearing Test Load Factor 1.0

CASE V

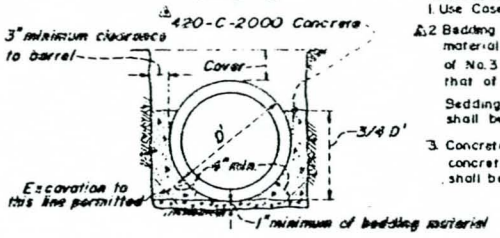

GENERAL NOTES

1. Use Case III for R.C.P. and A.C.P., Case II for vitrified clay and plain concrete pipe unless otherwise specified or shown on the project drawing.

△ 2. Bedding A shall be composed of sand, 3/4-inch or 1/2-inch crushed rock, No. 3 or No. 4 concrete aggregate or gravel, or other granular material as specified, unless otherwise approved by the Engineer. Any of the materials listed with a gradation no coarser than that of No. 3 concrete aggregate shall be used for pipe 27 inches in diameter and larger, and materials with a gradation no coarser than that of 1/2-inch crushed rock shall be used for pipe smaller than 27 inches in diameter.

Bedding B shall be composed of sand or other granular material as specified, unless otherwise approved by the Engineer, and shall be completed prior to placing balance of backfill.

3. Concrete backfill, where called for on Std. Dwg. 2-D213 or where specified on the project drawings, shall be △ 420-C-2000 concrete poured wall to wall of trench from top of Bedding A to a minimum depth of 4" over top of pipe. Concrete backfill shall be used for R.C.P. and A.C.P. as required on Std. Dwg. No. 2-D213.

GENERAL NOTES (CONT'D)

○ 4. Bedding B shall contain no rocks larger than 1-inch in greatest dimension

○ 5. Where rocks are included in the bedding, "nesting" thereof will not be permitted.

SUPERSEDES 2-D148

REFERENCES	REVISIONS			LOS ANGELES COUNTY FLOOD CONTROL DISTRICT
2-D213	MARK	DATE	DESCRIPTION	PIPE BEDDING IN TRENCHES
		6-54	Revised	
	※	12-54	REVISED	
	△	5-55	Revised Note	
	●	10-59	Revised Notes	
	○	3-61	Revised Notes	APPROVED BY
	△	7-68	Revised Notes 1 & 3	
	▲	10-68	Revised 36" to 108"	
	▲	4-73	Revised Designation	
	▲	1-76	Revised Note 2	
SUBMITTED	RECOMMENDED BY			DATE JUNE, 54 NO 2-D177 SHEET 1 OF

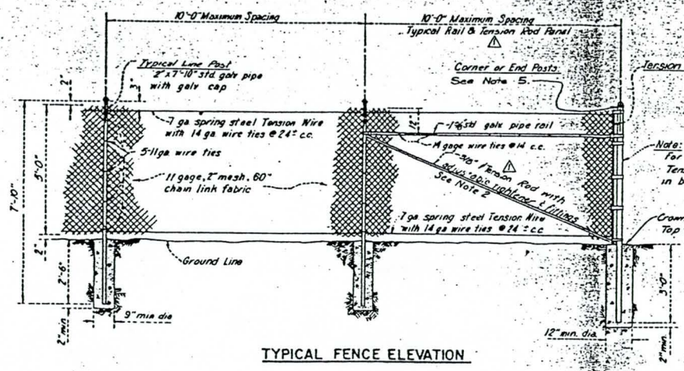

TYPICAL FENCE ELEVATION

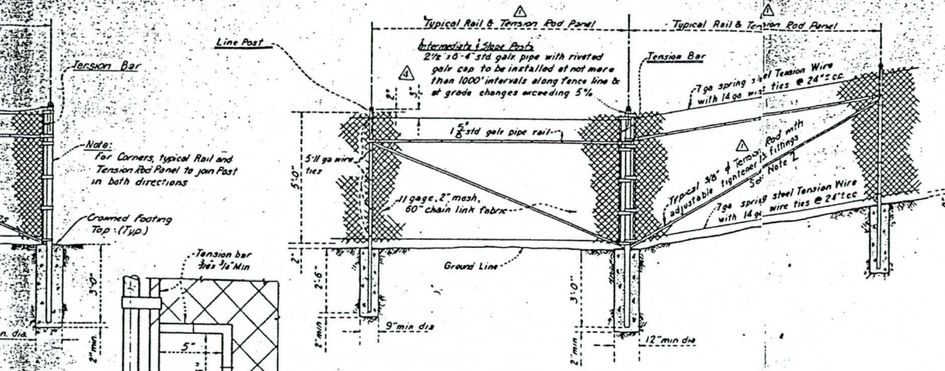

INTERMEDIATE POST DETAIL

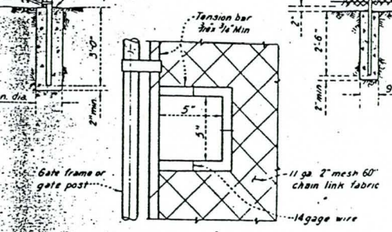

DETAIL OF CUTOUT
FOR CHAIN AND LOCK
SCALE NONE

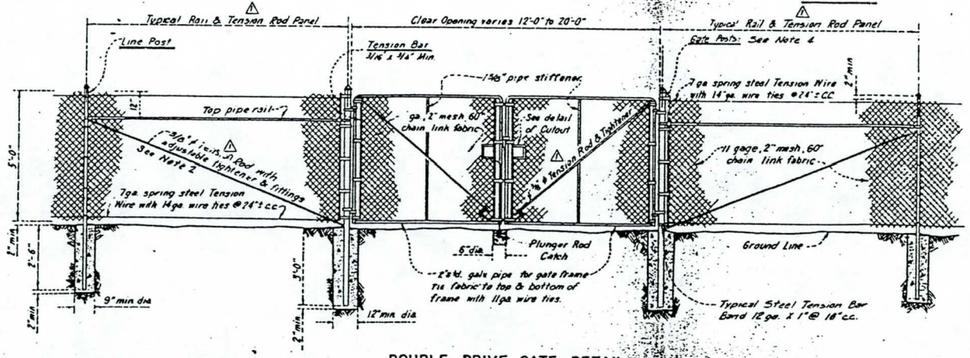

DOUBLE DRIVE GATE DETAIL

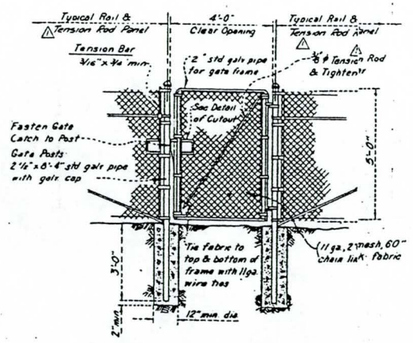

TYPICAL WALK GATE

GENERAL NOTES

1. All chain link fence materials and fittings shall conform to "Standard Specifications for Public Works Construction" sections 206-6 and 206-7 unless otherwise specified.
2. Adjustable tighteners shall be turnbuckle or equivalent, having 6-inch min. take up.
3. All gate hinges shall be heavy duty, malleable iron or steel, industrial service type 270 degree swing of approved quality and design.
4. Gate posts shall be 3" x 8'-4" pipe for 12'-0" opening and 4" x 8'-4" pipe for openings greater than 12'-0".
5. Corner or end posts shall be 3 x 8'-4" pipe.. Changes in line where the angle of deflection is 30 degrees or more shall be consicered a corner.
6. Secure galv. cap to post with 1/4" inch round head rivet.
7. Concrete shall be Class 420-C-2000.
8. The fabric shall be placed on the outward facing side of the posts, stretched taut, and securely fastened.
9. Gates shall be provided with a combination spring latch and plunger rod of approved design.
10. Dimensions shown for Standard Galvanized Pipe and Posts are nominal outside diameters.

DRAWN BY	REVISIONS		
S.Y.H.	MARK	DATE	DESCRIPTION
DESIGNED BY V.M.	4	6-2-69	Changed "Trans" to "Tensions"
CHECKED BY F.K.R.	5	6-14-71	Added Note 10 and changed pipe diameter
SUBMITTED BY C.W.H.	6	4-1-72	Revised Concrete Designation
	7	2-11-75	Changed Loc location of Tension wire

Supersedes Dwg. No. 2-D178 dated Nov, 1952

LOS ANGELES COUNTY
FLOOD CONTROL DISTRICT

TYPICAL FENCE AND GATE
DETAILS – FOR
CHANNEL RIGHTS-OF-WAY

RECOMMENDED BY C.E. Caldwell, DIVISION ENGINEER - DRAINAGE
APPROVAL RECOMMENDED William G. Kanaan, ASS'T CHIEF DEPUTY ENGINEER
APPROVED BY Walter J. Wade 1-8-69, CHIEF ENGINEER

SCALE	DATE	DWG. NO.
1/2" = 1'-0"	Dec. '68	2-D178
		SHEET 1 OF 1

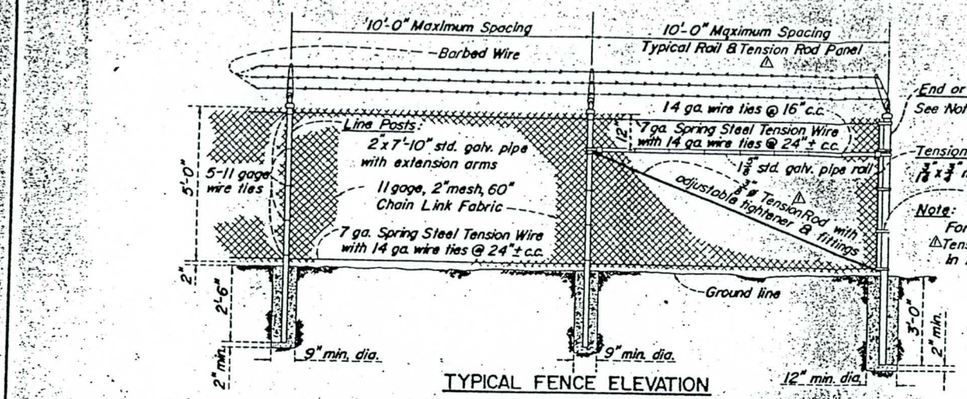

TYPICAL FENCE ELEVATION

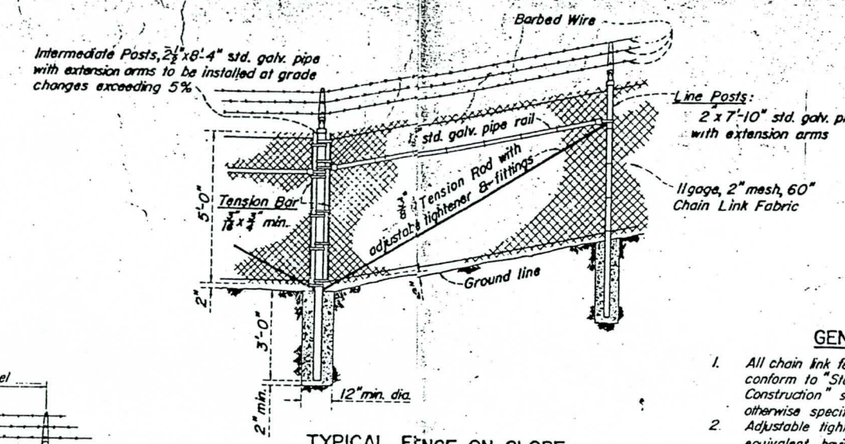

TYPICAL FENCE ON SLOPE

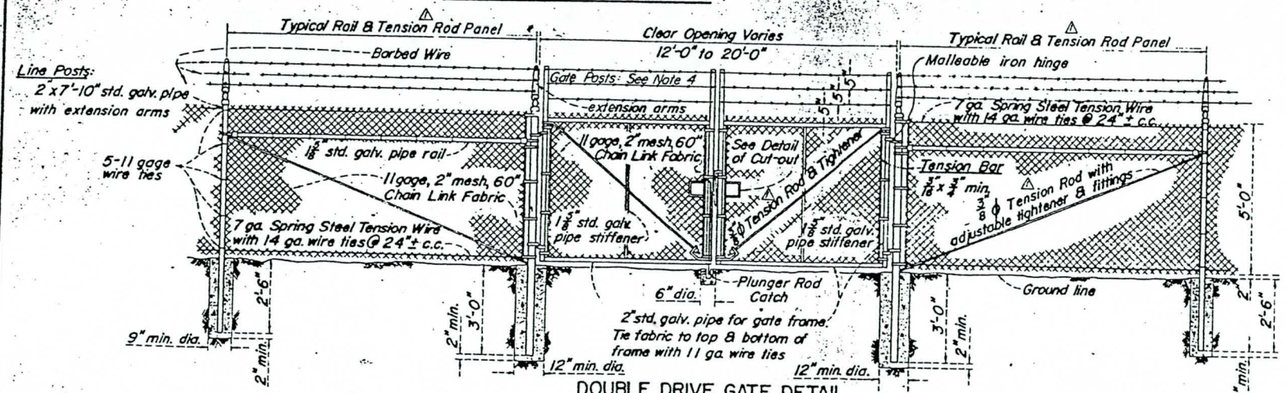

DOUBLE DRIVE GATE DETAIL

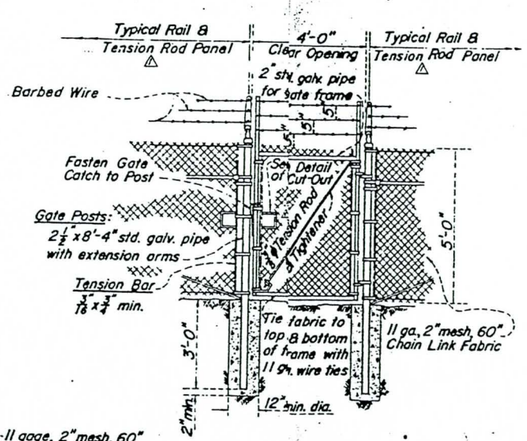

TYPICAL WALK GATE

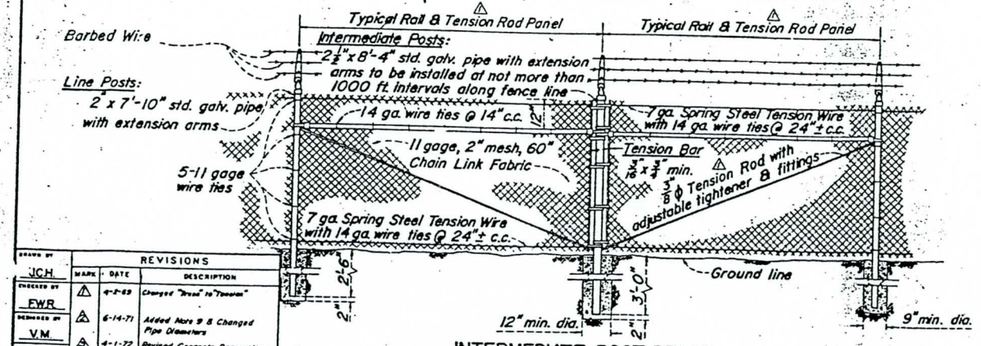

INTERMEDIATE POST DETAIL

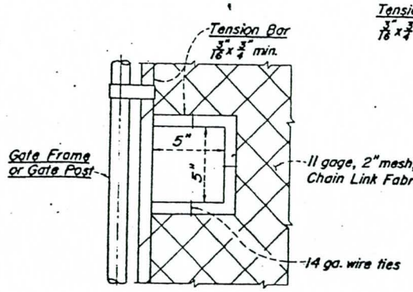

DETAIL OF CUT-OUT FOR CHAIN AND LOCK

GENERAL NOTES

1. All chain link fence materials and fittings shall conform to "Standard Specifications for Public Works Construction" sections 206-6 and 206-7 unless otherwise specified.
2. Adjustable tighteners shall be turnbuckle or equivalent, having 6-inch minimum take up.
3. All gate hinges shall be heavy-duty malleable iron or steel, industrial service type, 270 degree swing, of approved quality and design.
4. △ Gate posts shall be 3" X 8'-4" pipe for 12'-0" opening and 4" X 8'-4" pipe for openings greater than 12'-0".
5. △ Corner or End Posts shall be 3" X 8'-4" pipe. Changes in line where the angle of deflection is 30 degrees or more shall be considered a corner.
6. △ Concrete shall be Class 420-C-2000.
7. The fabric shall be placed on the outward facing side of the posts, stretched taut, and securely fastened.
8. Gates shall be provided with a combination spring latch and plunger rod of approved design.
9. △ Dimensions shown for Standard Galvanized Pipe and Posts are nominal outside diameters.

REVISIONS		
MARK	DATE	DESCRIPTION
△	4-2-69	Changed "Brace" to "Tension"
△	6-14-71	Added Note 9 & Changed Pipe Diameters
△	4-1-72	Revised Concrete Designation

DRAWN BY JCH
CHECKED BY FWR
DESIGNED BY V.M.
SUBMITTED BY CWH

Supersedes Dwg. No. 2-D179, dated May, 1963

LOS ANGELES COUNTY FLOOD CONTROL DISTRICT

TYPICAL FENCE AND GATE DETAILS FOR DEBRIS BASIN RIGHTS-OF-WAY

RECOMMENDED BY C. F. Fahlbusch, DIVISION ENGINEER HYDRAULIC DESIGN
APPROVED BY Walter E. Wood, CHIEF ENGINEER
APPROVED BY William N. Hansen, CHIEF DEPUTY ENGINEER

SCALE NONE | DATE JAN. '69 | DWG. NO. 2-D179 | SHEET 1 OF 1

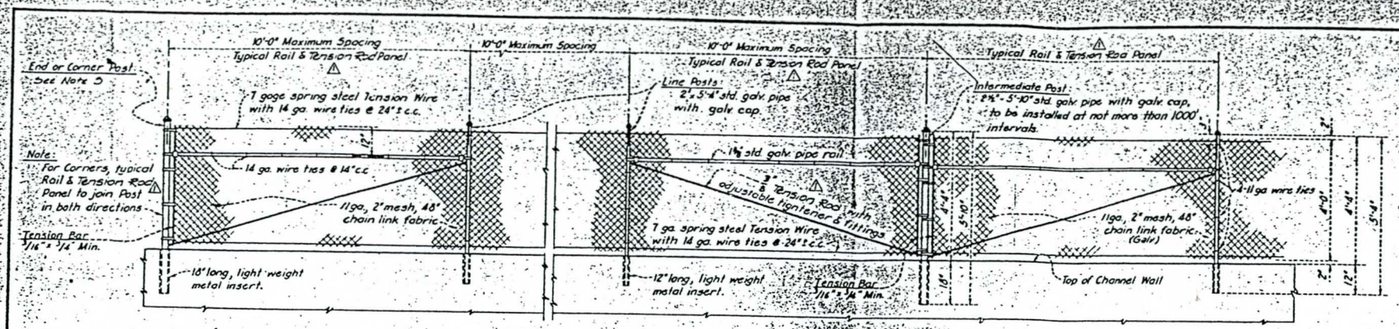

TYPICAL CHANNEL FENCE ELEVATION

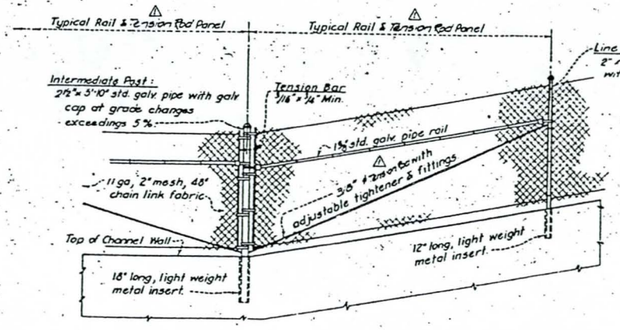

TYPICAL CHANNEL FENCE ELEVATION ON SLOPE

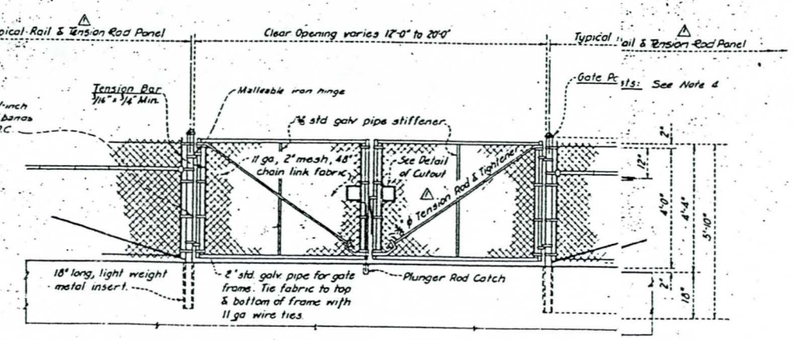

TYPICAL DOUBLE DRIVE GATE

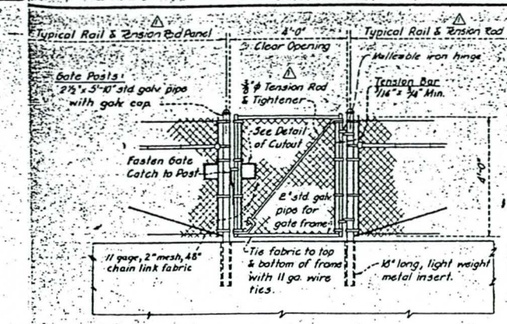

TYPICAL WALK GATE

GENERAL NOTES

1. All chain link fence materials and fittings shall conform to "Standard Specifications for Public Works Construction", Section 206-6 and 206-7, unless otherwise specified.
2. Light weight metal inserts shall be sheet metal tubes with I.D., $\frac{1}{4}$" greater than O.D. of pipe used. Posts are to be grouted into inserts.
3. Adjustable tighteners shall be turnbuckle or equivalent, having 6-inch min take up.
4. Gate posts shall be 3 X 5'-10" pipe for 12'-0" openings, and 4" X 5'-10" pipe for openings greater than 12'-0".
5. Corner or End posts shall be 3 X 5'-10" pipe. Changes in line where the angle of deflection is 30 degrees or more shall be considered a corner.
6. All gate hinges shall be heavy duty, malleable iron or steel, industrial service type 270 degree swing, of approved quality and design.
7. Secure galv. cap to post with $\frac{1}{4}$-inch galv. round head rivet.
8. The fabric shall be placed on the outward facing side of the posts, stretched taut, and securely fastened.
9. Gates shall be provided with a combination spring latch and plunger rod of approved design.
10. Dimensions shown for Standard Galvanized Pipe and Posts are nominal outside diameters.

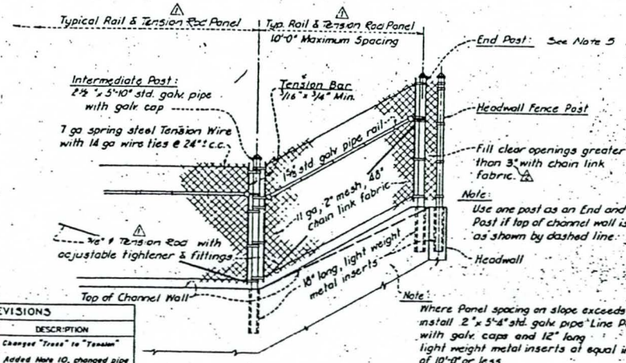

TYPICAL CHANNEL FENCE AT HEADWALL

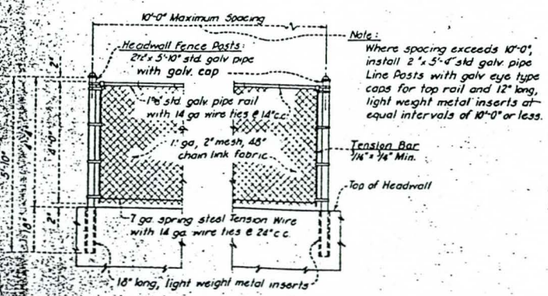

TYPICAL HEADWALL FENCE ELEVATION

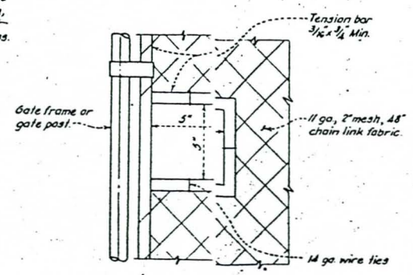

DETAIL OF CUTOUT FOR CHAIN AND LOCK

SCALE: NONE

DRAWN BY	REVISIONS		
J.C.H.	MARK	DATE	DESCRIPTION
CHECKED BY F.W.R.	1	4-2-69	Changed "Truss" to "Tension"
DESIGNED BY V.M.	2	6-22-71	Added Note 10, changed pipe diameters & revised dimension
SUBMITTED BY C.W.H.			

Supersedes Dwg No. 2-D180, dated Nov., 1952

LOS ANGELES COUNTY FLOOD CONTROL DISTRICT

TYPICAL FENCE, GATE & HEADWALL DETAILS FOR CHANNEL WALLS

RECOMMENDED BY — DIVISION ENGINEER (DESIGN)
APPROVAL RECOMMENDED — ASS'T CHIEF DEPUTY ENGINEER
APPROVED BY — CHIEF ENGINEER

SCALE	DATE	DWG. NO.	
1/2" = 1'-0"	JAN '69	2-D180	SHEET 1 OF 1

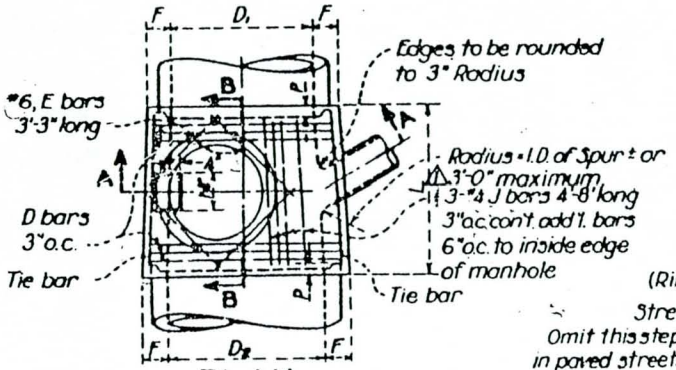

PLAN

(Shaft not shown)

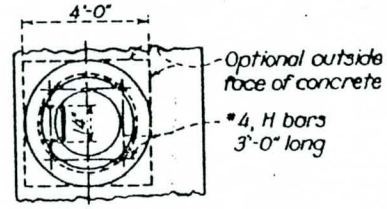

PLAN

(Rings and cover not shown)

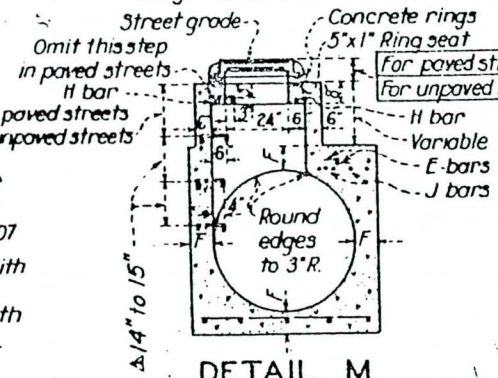

	Max	Min
For paved streets	11"	8½"
For unpaved strs	16"	15"

DETAIL M

(See Note 3)

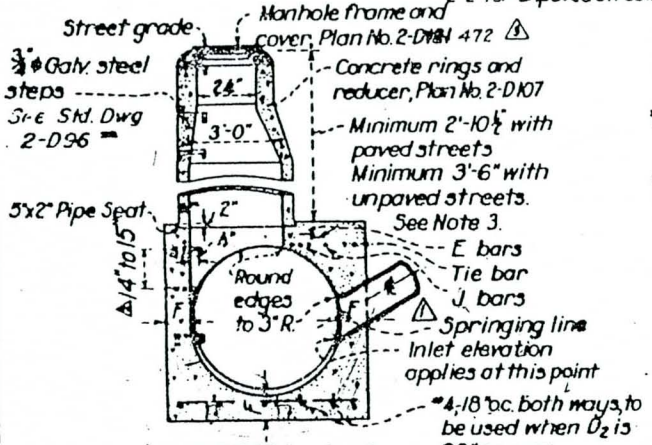

SECTION A-A

TABLE OF VALUES FOR "F"			
D_2	F	D_2	F
36"	6½"	78"	11½"
39"	7"	84"	12½"
42"	7½"	90"	13½"
45"	7¾"	96"	14"
48"	8"	102"	15½"
51"	8½"	108"	16"
54"	9"	114"	16½"
57"	9½"	120"	17"
60"	9½"	126"	17"
63"	10"	132"	17½"
66"	10½"	138"	17½"
69"	10½"	144"	18"
72"	11"		

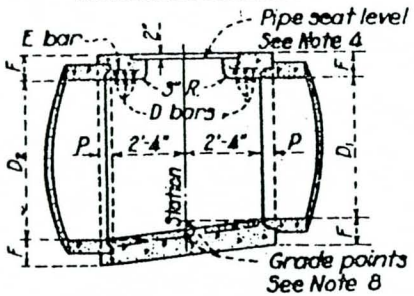

SECTION B-B

NOTES

1- TABLE of values for "F" are on this plan.

2- CENTER OF MANHOLE SHAFT shall be located over center line of storm drain when diameter D_1 is 48" or less, in which case place E bars symmetrically around shaft at 45° with center line and omit J bars.

3- DETAIL M: When depth of manhole from street grade to top of box is less than 2'-10½" for paved street or 3'-6" for unpaved street, construct monolithic shaft as per Detail M. Shaft for any depth of manhole may be constructed as per Detail M. When diameter D_1 is 48" or less, center of shaft may be located as per note 2.

4- THICKNESS OF DECK shall vary when necessary to provide level pipe seat, but shall not be less than tabular values for F shown on this plan.

5- REINFORCING STEEL to be per 2-D171, 1½" clear from face of concrete unless shown otherwise.

6- STEPS shall be ¾" round, galvanized steel and anchored not less than 6" inches in the walls of structure. Unless otherwise shown the spacing shall be 14" to 15" o.c. △ The lowest step shall not be more than 2'-6" above the invert. See Std. Dwg 2-D 96

7- RINGS, REDUCER AND PIPE for access shaft shall be seated in mortar and neatly pointed or wiped inside the shaft.

8- STATIONS of manholes shown on plan apply at center of shaft. Elevations shown at stations refer to prolonged invert grade lines

9- FLOOR of manhole shall be steel-troweled to springing line.

10- BODY of manhole shall be poured in one continuous operation, except that a construction joint with a longitudinal keyway may be placed at the springing line.

11- LENGTH L AND EMBEDMENT P shall have the following values unless otherwise shown on plan

for D_2 = 96" or less, L = 5'-6", P = 5"

D_2 over 96", L = 6'-0", P = 8"

L may be increased or location of manhole shifted to meet pipe ends. When L greater than that shown above is specified, D bars shall be continued 6" o.c.

12- D BARS shall be #4 for D_2 = 39" or less, #5 for D_2 = 42" to 84" inclusive and #6 for D_2 = 90" or over. Tie bars shall be #3 bars

13- f'_c = 3000 p.s.i. at 28 days.

△1 14- Centerline of inlet pipe to intersect inside face of cone at springing line unless otherwise shown.

O 15 Where Pressure Manhole No. 2 is specified on plans see Std Dwg 2-D210 note 3.

SUPERSEDES DWG. NO. 2-D103

REFERENCES	REVISIONS		
	MARK	DATE	DESCRIPTION
2-D107	△1	8-53	Revised
2-D171			
~~2-D181~~ △2	□	10-53	Changed dimen.
2-D210	O	10-54	Added note
2-D96		10-54	Added note
2-D472 △3	△2	11-9-70	Step Spacing
	△3	3-1-74	MH F&C ref.

LOS ANGELES COUNTY FLOOD CONTROL DISTRICT

MANHOLE NO. 2
PLAN, SECTION AND DETAIL

APPROVED BY H. Einsiedler 6/12/53 CHIEF ENGINEER

SUBMITTED BY W. W. Kirkham

RECOMMENDED BY W. P. Crane DIVISION ENGINEER (DESIGN)

DATE 6-12-53

NO. 2-D184

SHEET OF

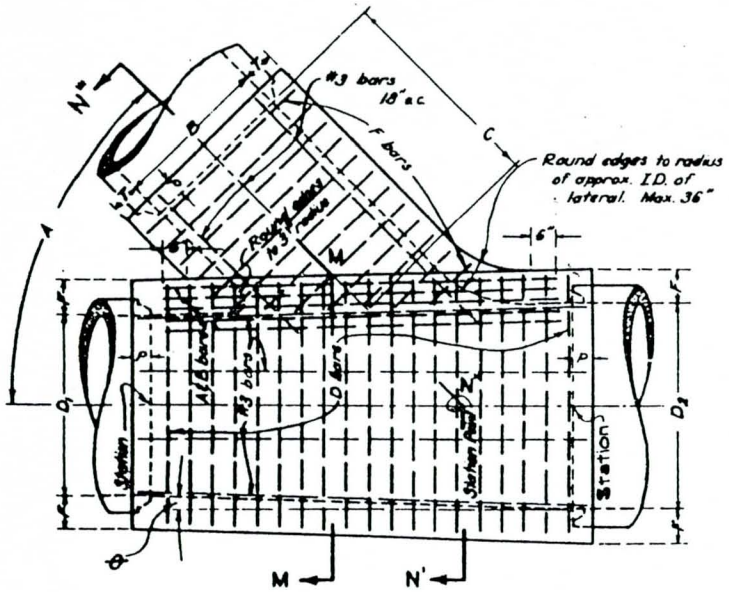

PLAN

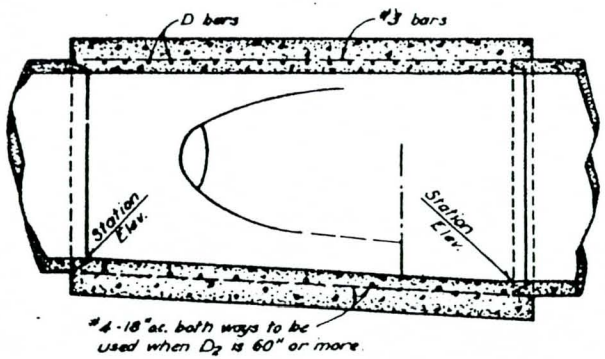

LONGITUDINAL SECTION

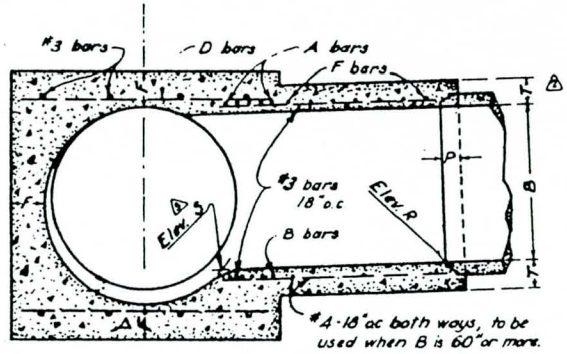

SECTION N'-N"-N'''
PROJECTED ON M-M-N"

TABLE

for dimensions and bar sizes

D_2 or B	F or T	A and B bars	D or F bars	P (R.C.P.)
12	4	#5-3" o.c.	#4-6" o.c.	5"
15	4½			
18	4½			
21	5			
24	5½			
27	5½			
30	6			
33	6½			
36	6½			
39	7			
42	7½	#6-3" o.c.	#5-6" o.c.	
45	7½			
48	8			
51	8½			
54	9			
57	9½			
60	9½			
63	10			
66	10½			
69	10½			
72	11			
78	11½			
84	12½			
90	13½	#7-3" o.c.	#6-8" o.c.	8"
96	14			
102	13½			
108	16			
114	16½			
120	17			
126	17			
132	17½			
138	17½			
144	18			

NOTES

1. The horizontal angle of convergence or divergence, θ, shall not exceed 5° 45'.
2. Values for A, B, C, D_1 and D_2 are shown on the project drawings. Elevation R and Elevation S are shown when required by Note 11.
3. f'_c shall equal 3000 psi at 28 days.
4. FLOOR of structure shall be steel-troweled to springing line.
5. REINFORCING STEEL shall be per Std. Dwg 2-D171 with a minimum of 1½" clear from face of concrete unless otherwise shown. Longitudinal bars shall be #3 spaced 18" or less on center.
6. ELEVATION S applies at inside wall of structure.
7. TRANSITION STRUCTURE shall be poured in one continuous operation, except that the Contractor shall have the option of placing at the springing line a construction joint with a longitudinal keyway.
8. The length of the structure may be increased at the option of the Contractor to meet pipe ends, using D bars in extended portion of same diameter and spacing as specified in the Table, but any change in the location of SPUR must be approved by the Engineer.
9. EMBEDMENT P shall be as specified in the Table unless otherwise shown on the Project drawings.
10. When dimension C is not specified the Spur shall not be constructed and A & B bars shall be omitted.
11. When Elevation R and Elevation S are not shown on project drawings, inlet pipe shall enter main line radially. When inlet pipe enters main line other than radially, Elevation S shall be shown on project drawings, and inlet pipe shall be laid on a straight grade from Elevation S to catch basin or grade break in inlet line. Elevation R shall be shown on project drawings only when stub is to be provided in main line for future construction of inlet pipe.

NOTES (Cont.)

REFERENCES	REVISIONS			LOS ANGELES COUNTY FLOOD CONTROL DISTRICT
2-D171	MARK	DATE	DESCRIPTION	TRANSITION STRUCTURE NO. 3 PLAN & SECTIONS
	Δ	12-53	Revised	
	Δ	12-66	Revised Note 2 & Added Note 11	
	Δ	9-68	Revised C Length & ELEV. S.	

APPROVED BY H. G. Hedger 9/4/53 CHIEF ENGINEER

SUBMITTED Lawa. RECOMMENDED BY W. D. Rand DIVISION ENGINEER (DESIGN)

DATE AUG. 1953 NO. 2-D188

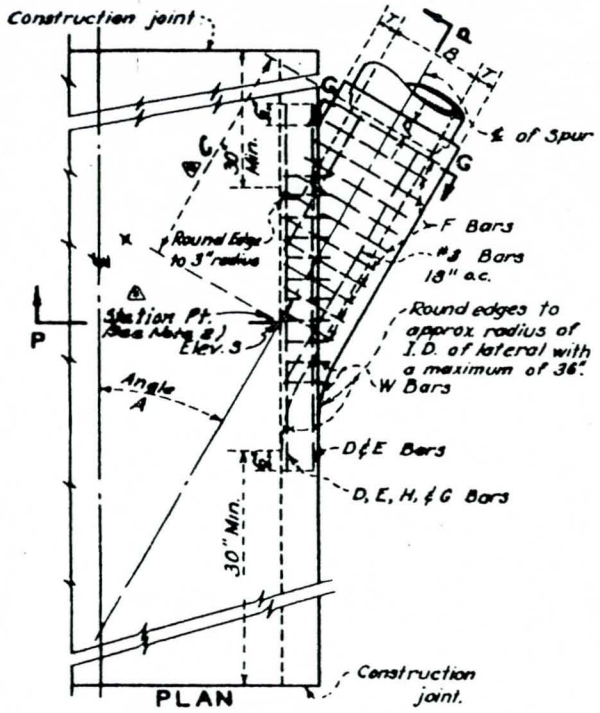

PLAN

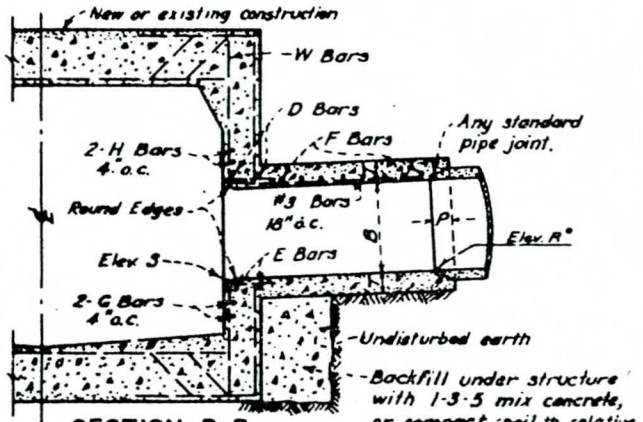

SECTION P-P

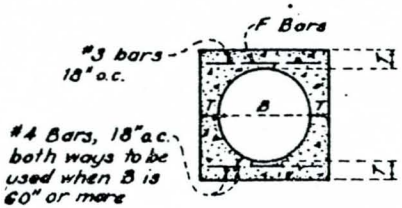

SECTION G-G

TABLE
for dimensions and bar sizes

B (inches)	T (inches)	D, E, H, & G Bars	F Bars
12	4	#5	#4 @ 6" o.c.
15	4½		
18	4½		
21	5		
24	5¼		
27	5½		
30	6		
33	6¼		
36	6½		
39	7		
42	7½	#6	#5 @ 6" o.c.
45	7¾		
48	8		
51	8½		
54	9		
57	9¼		
60	9½		
63	10		
66	10¼		
69	10¾		
72	11		
78	11¾		
84	12½		
90	13¼	#7	#6 @ 6" o.c.
96	14		
102	15½		
108	16		
114	16½		
120	17		
126	17		
132	17½		
138	17½		
144	18		

NOTES

Δ + 1. Values for A, B and C are shown on the project drawings. Elevation R and Elevation S are shown when required per Note 8.

2. Stations specified on drawings apply at the intersection of center lines of main line and laterals, except that stations for catch basin connector pipe apply at inside wall of structure.

3 Reinforcing steel shall be per 2-D 171, straight bars 1½" clear from face of concrete unless otherwise shown.
W bars are of size and spacing specified for wall steel on plan, and shall be cut in center of opening and bent into top and bottom of junction structure.
Omit H bars when soffit of spur is 12" or less below soffit of main line, and omit G bars when invert of spur is 12" or less above floor of main line.

4. Junction structure shall be poured monolithically with main line storm drain, manhole or transition.

5 Floor of structure shall be steel-troweled to the spring line.

6 f'_c = 3000 psi at 28 days.

7. Embedment, P, shall be 5" for B = 96" or less and 8" for B over 96".

Δ 8. When Elevation R and Elevation S are not shown on the project drawings inlet opening shall fall 6 inches below the soffit, and inlet pipe shall be laid on a straight grade from main line to catch basin or to grade break in inlet line.
Elevation S shall be shown on the project drawings when inlet opening falls more than 6 inches below the soffit, and inlet pipe shall be laid on a straight grade as stated above.
Elevation R shall be shown on the project drawings <u>only</u> when a stub is to be provided for future construction of inlet pipe.

REFERENCES	REVISIONS			LOS ANGELES COUNTY FLOOD CONTROL DISTRICT
2-D171	MARK	DATE	DESCRIPTION	JUNCTION STRUCTURE NO. 1 PLAN & SECTIONS
	Δ	12-53	Revised Note.	
	+	1-19-54	Changed "L" to "C."	
	•	4-17-56	Revised.	
	Δ	12-27-66	Revised Note 1 & Added Note 8	
	Δ	10-31-63	Rev. "C" LENGTH & Sta. Pt.	APPROVED BY H. Ostrander 11/1/63 CHIEF ENGINEER
SUBMITTED Jhoo	RECOMMENDED BY W. O. Wann DIVISION ENGINEER (DESIGN)			DATE AUG. 1963 — NO. 2-D 189

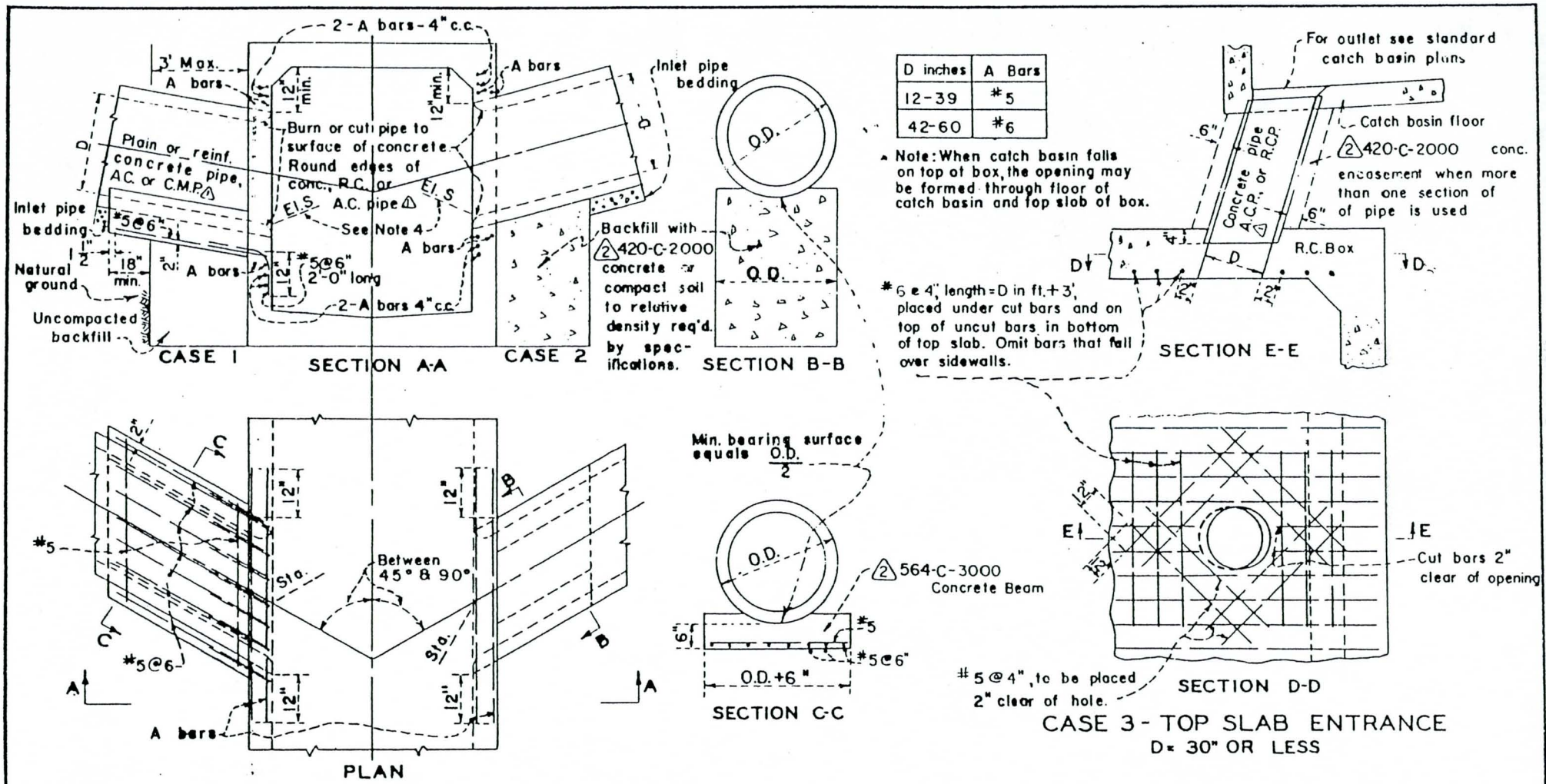

NOTES:

1. All corrugated metal pipe and fittings shall be galvanized.
2. Use Junction Structure No. 1 where size of inlet pipe exceeds dimensions given above.
3. Unless otherwise specified Case 2 support shall be used.
4. El. "S" shall be specified on project drawings only where top of pipe is more than 12" below soffit of box.

REFERENCES	REVISIONS			LOS ANGELES COUNTY FLOOD CONTROL DISTRICT
	MARK	DATE	DESCRIPTION	JUNCTION STRUCTURE NO. 3
	▲	7-53	Added Note	PLAN & SECTIONS
	△	12-8-69	Add A.C. Pipe	APPROVED BY
	②	4-72	Revised Concrete Designation	
SUBMITTED BY	RECOMMENDED BY			DATE DEC. 53 — NO 2-D 191 — SHEET 1 OF 1

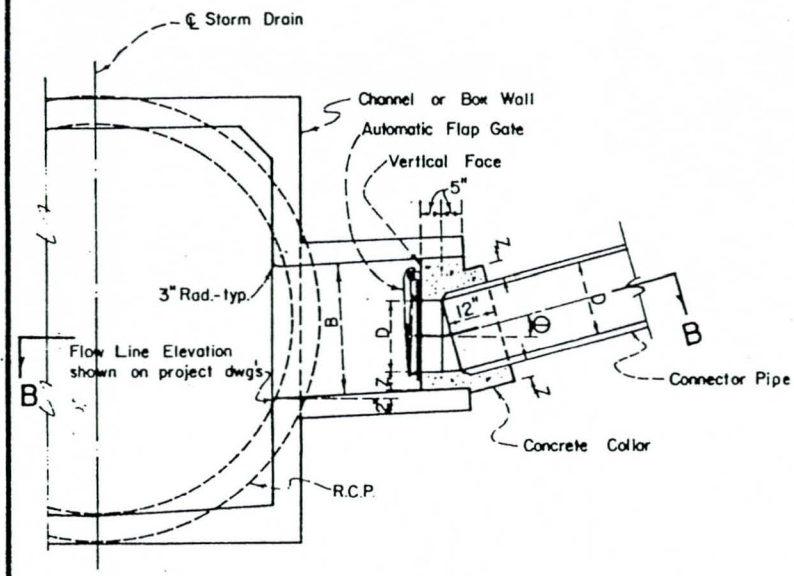

SECTIONAL ELEVATION

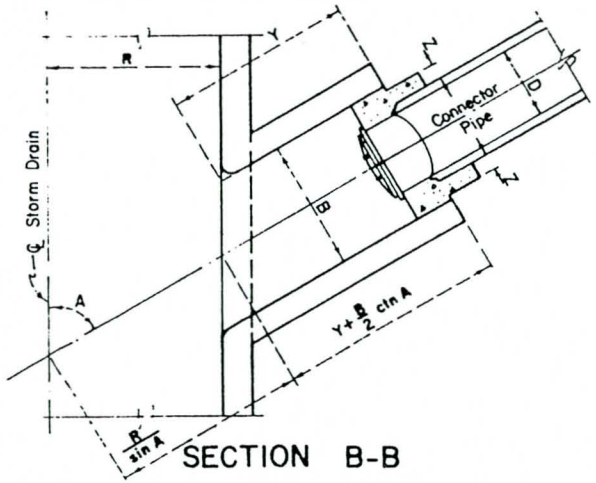

SECTION B-B

D in	B in	Z in	Y ft
12	24	5.0	4.0
15	27	5.0	4.0
18	33	5.0	4.0
21	39	5.0	4.0
24	42	5.0	4.0
30	51	6.0	4.5
36	60	6.0	5.0
42	72	7.0	6.0
48	81	7.0	6.5
54	87	7.0	7.0
60	96	8.0	8.0
66	108	8.0	8.5
72	114	8.0	9.0
78	126	9.0	9.5
84	138	9.0	10.5
90	144	9.0	11.0

NOTES:

1. Mount the automatic flapgate on a concrete collar poured in the end of a junction structure spur. If no junction structure is specified, use J.S. No. 2, Std. Dwg. No. 2-D112, when entering pipe and J.S. No. 1, Std. Dwg. No. 2-D188, when entering R.C. box. Refer to the contract drawings for a junction structure when entering trapezoidal or rectangular R.C. chan.
2. (2) Mounting bolts shall be of galvanized carbon steel ASTM A307 for Type I Flap Gates and Type 316 stainless steel for Type II Flap Gates, and embedded 5" into the collar.
3. (1) The flapgate shall be Armco, Waterman, Cascade or District-approved equal automatic flapgate, designed for 20 feet of seating head unless otherwise shown on the contract drawings.
4. The "Y" dimension is measured at the top of the junction structure spur for trapezoidal R.C. Channel.
5. The concrete collar shall be reinforced per Std. Dwg. No. 2-D393 when angle Θ exceeds 10°.
6. Flapgate may be either spigot back or flat back unless specified on the contract drawings.
7. (1) The automatic flapgate shall conform to District Standard Specifications and shall be designed for 20 feet of seating head unless otherwise specified.

SUPERSEDES DRAWING OF THE SAME NUMBER DATED DEC. 1953

REVISIONS		
MARK	DATE	DESCRIPTION
(1)	10-1-69	Revised Notes
(2)	3-19-71	Revised Note 2

DRAWN BY S.Y.H.
CHECKED BY V.M.
DESIGNED BY G.C.
SUBMITTED BY C.W.H.

LOS ANGELES COUNTY FLOOD CONTROL DISTRICT

AUTOMATIC FLAP GATE INLETS TO STORM DRAINS

RECOMMENDED BY C.F. Cabelloy, DIVISION ENGINEER (HYDRAULIC)
APPROVAL RECOMMENDED BY William W. Ransom, ASST CHIEF DEPUTY ENGINEER
APPROVED BY Walter J. Wood, CHIEF ENGINEER

SCALE	DATE	DWG. NO. 2-D192
NONE	6-18-69	SHEET 1 OF 1

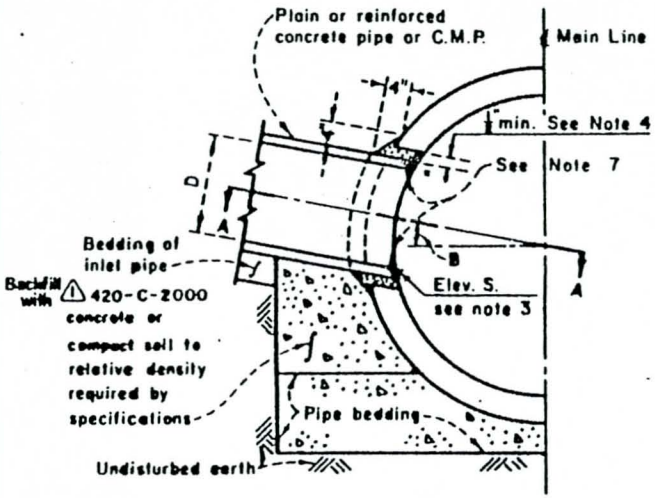

SECTION B-B

CASE I

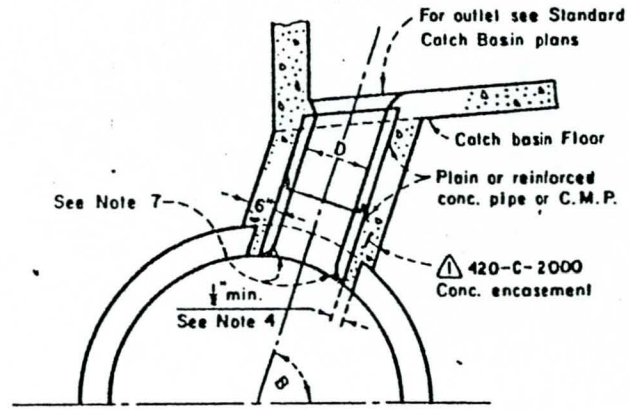

CASE 2

Note: All connector pipes (within the angles specified for Case 2) shall be encased when laid within the main line excavated trench, or when laid on fill which has not been densified.

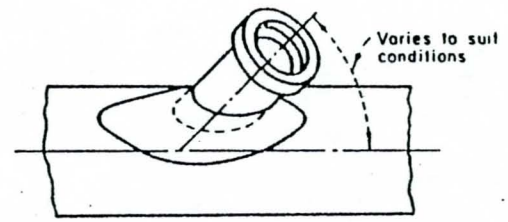

PLAN

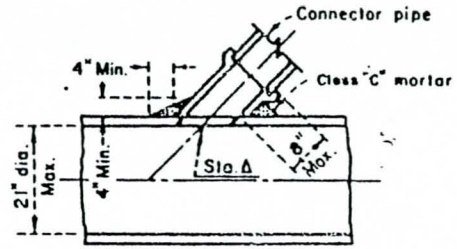

SECTION

CASE 3 - SADDLE CONNECTION

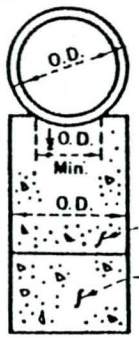

SECTION C-C

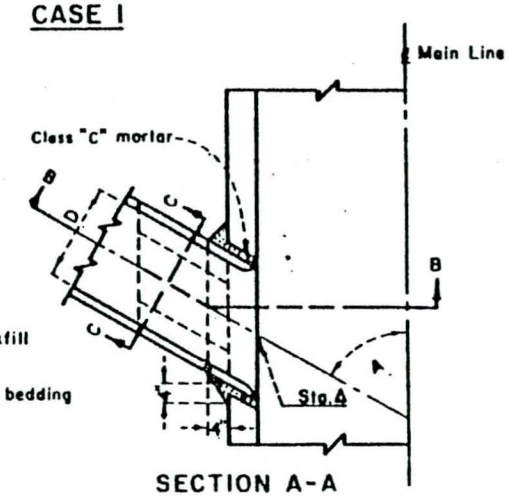

SECTION A-A

CASE I

NOTES: CASE I AND CASE 2

1. Angle A shall be between 45°degrees and 90 degrees and D shall be 24 inches or less. For smaller values of A and larger values of D, use appropriate standard structure.
2. In no case shall the outside diameter of the inlet pipe exceed one-half the inside diameter of the main storm drain.
3. Center line of inlet shall be on radius of main storm drain except where Elevation S is shown on project drawings.
4. The opening into the main storm drain shall be the outside diameter of the inlet pipe plus one inch minimum or 3 inch maximum.
5. All corrugated metal pipe and fittings shall be galvanized.
6. If Angle B is 45 degrees or less, use Case I. If Angle B is greater than 45 degrees, use Case 2.
7. Burn or chip end of connector pipe flush with inner surface of mainline pipe. Round edge of concrete pipe or reinforced concrete pipe.

Δ 8. Station specified on drawings applies at the intersection of inside wall of main storm drain and center line of inlet pipe.

NOTES: CASE 3

1. Connections to pipes 21 inches or less in diameter without junction structures or precast Y branches shall be made with saddles
2. Trim or cut saddle to fit snugly over the outside of the main pipe, and so its axis will be on the line and grade of the connecting pipe.
3. The opening into the pipe shall be cut and trimmed to fit the saddle so that no part will project within the bore of the saddle pipe.
4. The connecting pipe shall be supported as shown in Cases I and 2.

Supersedes drawing of same number dated DECEMBER, 1953

DRAWN BY	REVISIONS		
A. SH.	MARK	DATE	DESCRIPTION
CHECKED BY K. O.	Δ	8-66	added
	△1	4-1-72	Revised Concrete Designation
DESIGNED BY V. A. R.			
SUBMITTED BY C. W. H.			

LOS ANGELES COUNTY FLOOD CONTROL DISTRICT

JUNCTION STRUCTURE NO. 4

RECOMMENDED BY C. F. Eshelby DIVISION ENGINEER

APPROVAL RECOMMENDED BY H. W. Outhouse ASST. CHIEF DEPUTY ENGINEER

APPROVED BY Walter J. Wood CHIEF ENGINEER

SCALE	DATE	DWG. NO. 2-D193
NONE	MAR. 1966	SHEET 1 OF 1

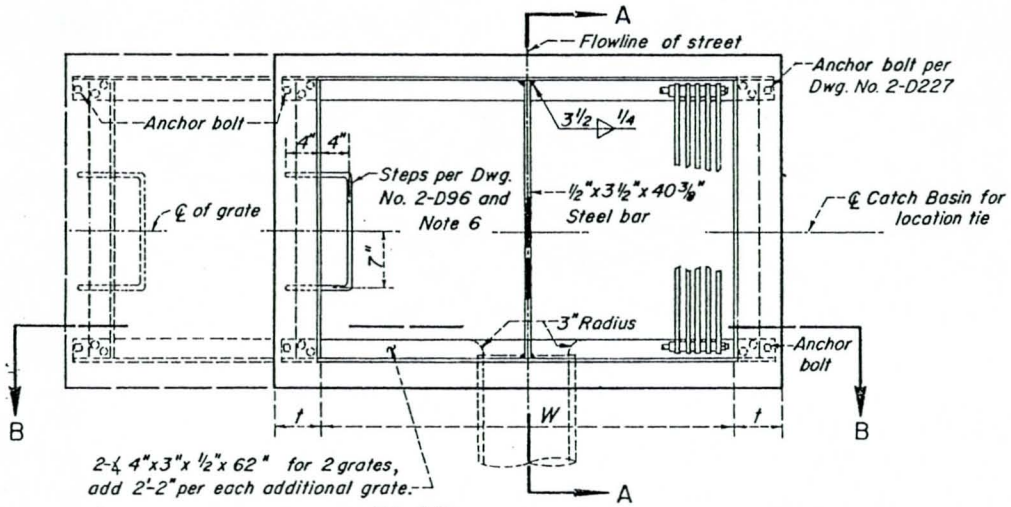

PLAN

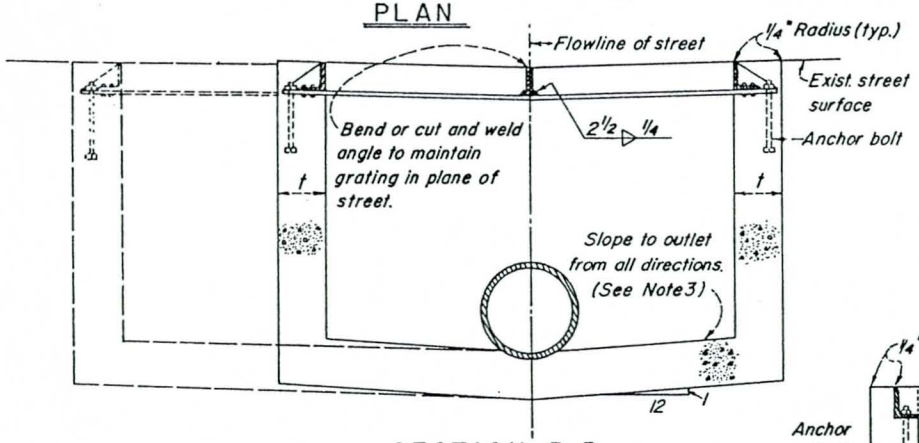

SECTION B-B

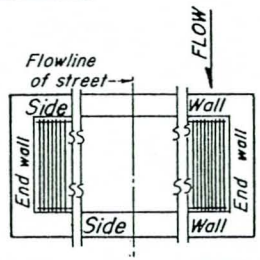

BASIN AND GRATING ALIGNMENT PLAN

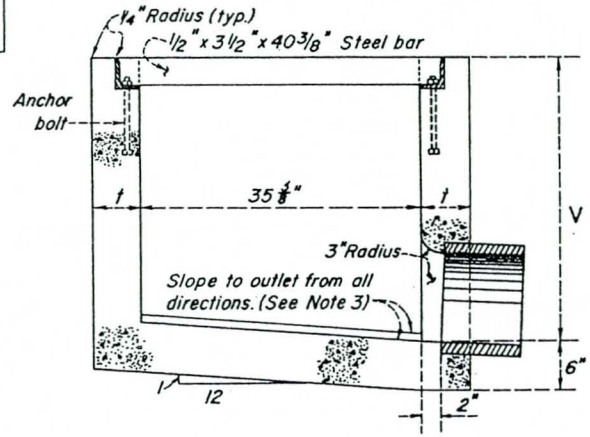

SECTION A-A

NOTES

1. GRATINGS: (Standard Drawing No. 2-D227).
   Two gratings are required unless additional gratings are shown on the general plan. Gratings shall be positioned in the plane of the existing street surface.
2. CONNECTOR PIPE:
   Connector pipes may be aligned to any wall at the floor of basin chamber. Pipe shall be trimmed to the final length and shape before placement of concrete.
3. CONCRETE: Design, f'_c=3,000 psi, compressive strength at 28 days.
   Floor of the basin shall be given a steel-troweled finished surface and shall slope from all walls to the outlet. Top of basin walls shall conform to the existing street surface in elevation and slope.
4. REINFORCEMENT: (Standard Drawing No. 2-D171)
   Walls and Floor – As required by Standard Drawing No. 2-D172.
5. DIMENSIONS:
   V = 3'-0", unless otherwise shown.
   W = 4'-3 1/2" for two grates; add 2'-2" for each additional grate.
   t = 6 inches if V = 4'-0" or less; t = 8 inches if V = 4'-1" to 8'-0"; t = 10 inches if V = 8'-1" or more.
   Frame steel and dimensions shall be as required by Standard Drawing No. 2-D227 except as otherwise shown.
6. STEPS: (Standard Drawing No. 2-D96)
   V to 3'-0" (incl.), place one step 12 inches above the floor of the basin.
   V over 3'-0", place steps at 12-inch intervals from the floor of the basin with the top step at 12 inches (min.) below the top of the grate. Construct steps on opposite end wall, when connector pipe is aligned to drawing location of steps.

Supersedes drawing of the same number dated 1-54

REVISIONS		
MARK	DATE	DESCRIPTION

DRAWN BY H.L.H.
CHECKED BY D.W.H.
DESIGNED BY G.J.P.
SUBMITTED BY C.W.H.

LOS ANGELES COUNTY FLOOD CONTROL DISTRICT

CATCH BASIN NO. 5A
PLAN, SECTION, & DETAILS

RECOMMENDED BY G. F. Schelling DIVISION ENGINEER (MAINT.)
APPROVAL RECOMMENDED BY Milan W. Ranson ASS'T CHIEF DEPUTY ENGINEER
APPROVED BY Walter J. Wood 7/24/65 CHIEF ENGINEER

SCALE	DATE	DWG. NO. 2-D195
NONE	5-15-'68	SHEET 1 OF 1

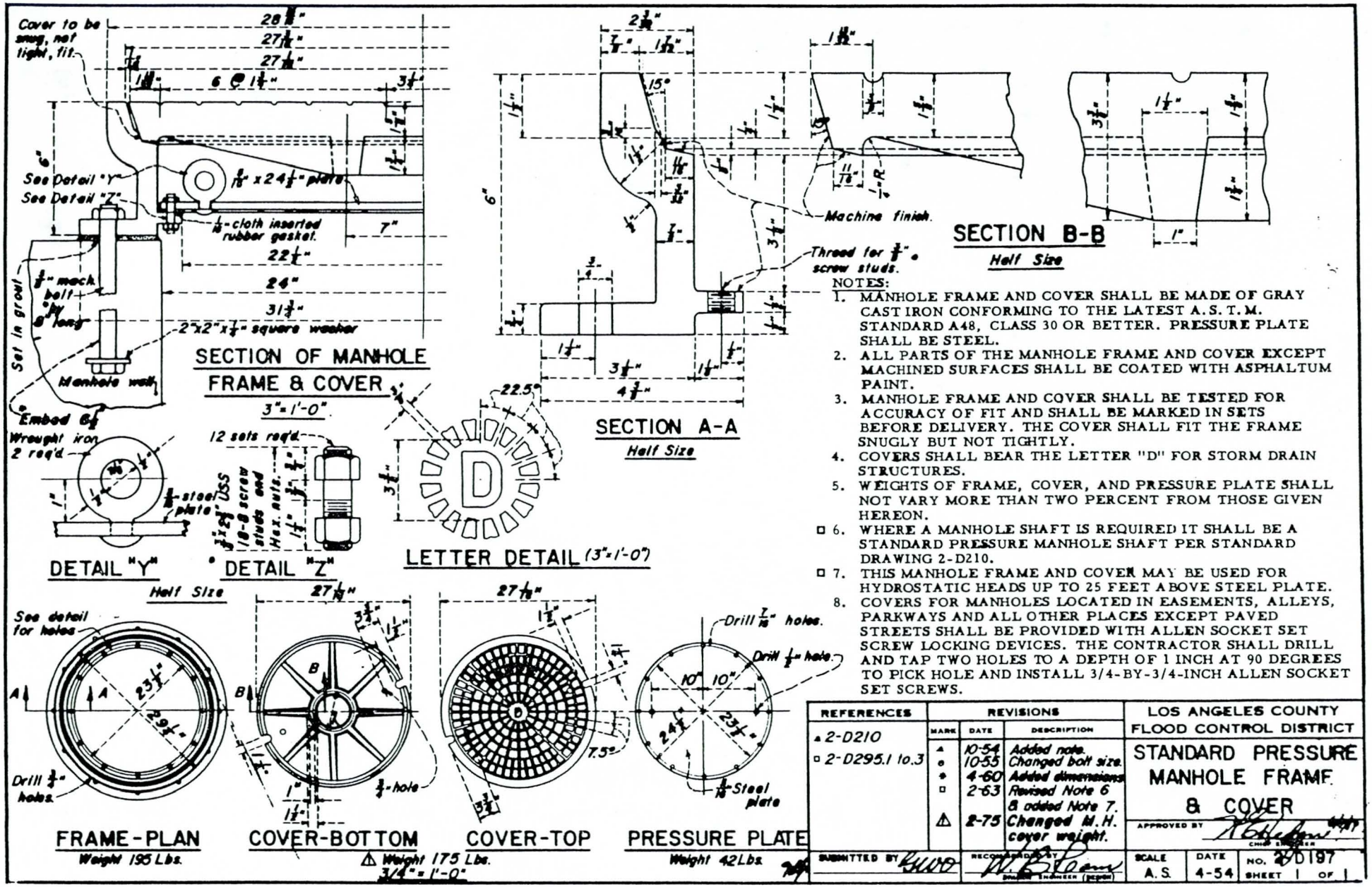

NOTES:

1. MANHOLE FRAME AND COVER SHALL BE MADE OF GRAY CAST IRON CONFORMING TO THE LATEST A.S.T.M. STANDARD A48, CLASS 30 OR BETTER. PRESSURE PLATE SHALL BE STEEL.
2. ALL PARTS OF THE MANHOLE FRAME AND COVER EXCEPT MACHINED SURFACES SHALL BE COATED WITH ASPHALTUM PAINT.
3. MANHOLE FRAME AND COVER SHALL BE TESTED FOR ACCURACY OF FIT AND SHALL BE MARKED IN SETS BEFORE DELIVERY. THE COVER SHALL FIT THE FRAME SNUGLY BUT NOT TIGHTLY.
4. COVERS SHALL BEAR THE LETTER "D" FOR STORM DRAIN STRUCTURES.
5. WEIGHTS OF FRAME, COVER, AND PRESSURE PLATE SHALL NOT VARY MORE THAN TWO PERCENT FROM THOSE GIVEN HEREON.
6. □ WHERE A MANHOLE SHAFT IS REQUIRED IT SHALL BE A STANDARD PRESSURE MANHOLE SHAFT PER STANDARD DRAWING 2-D210.
7. □ THIS MANHOLE FRAME AND COVER MAY BE USED FOR HYDROSTATIC HEADS UP TO 25 FEET ABOVE STEEL PLATE.
8. COVERS FOR MANHOLES LOCATED IN EASEMENTS, ALLEYS, PARKWAYS AND ALL OTHER PLACES EXCEPT PAVED STREETS SHALL BE PROVIDED WITH ALLEN SOCKET SET SCREW LOCKING DEVICES. THE CONTRACTOR SHALL DRILL AND TAP TWO HOLES TO A DEPTH OF 1 INCH AT 90 DEGREES TO PICK HOLE AND INSTALL 3/4-BY-3/4-INCH ALLEN SOCKET SET SCREWS.

REFERENCES	REVISIONS			LOS ANGELES COUNTY FLOOD CONTROL DISTRICT
▲ 2-D210	MARK	DATE	DESCRIPTION	STANDARD PRESSURE MANHOLE FRAME & COVER
□ 2-D295.1 to.3	▲	10-54	Added note.	
	●	10-55	Changed bolt size.	
	◆	4-60	Added dimensions	
	□	2-63	Revised Note 6 & added Note 7.	
	⚠	2-75	Changed M.H. cover weight.	

SUBMITTED BY [signature] RECOMMENDED BY [signature] SUPER. ENGINEER (DESIGN) APPROVED BY [signature] CHIEF ENGINEER

SCALE	DATE	NO.	SHEET
A.S.	4-54	2-D197	1 OF 1

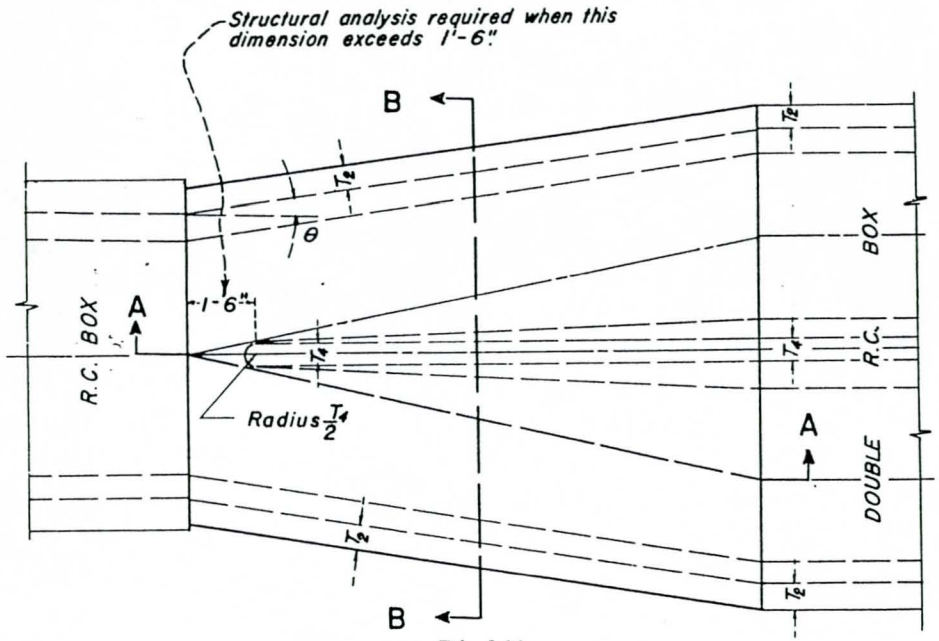

PLAN

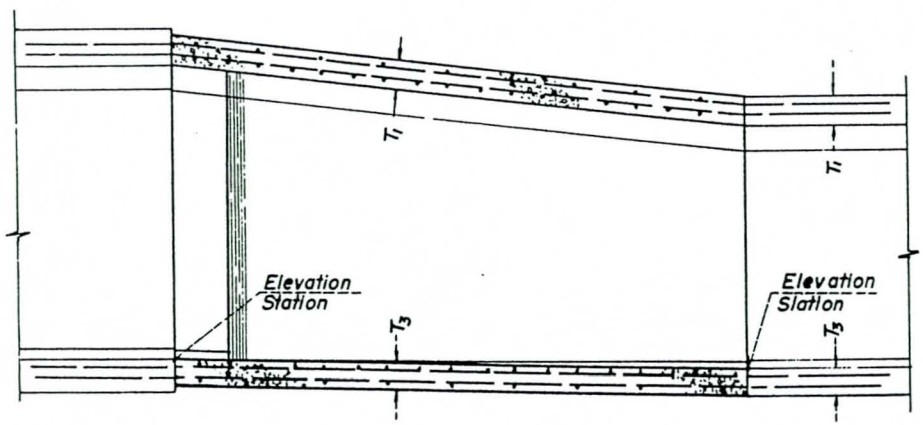

SECTION A-A

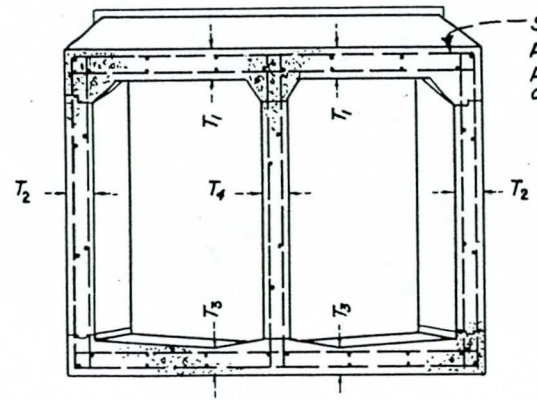

SECTION B-B

NOTES:

1. The horizontal angle of divergence or convergence, θ, shall not exceed 5°45'.
2. Reinforcing steel bar size, spacing and outside cover shall be that of double box section. For curved transitions, space bars on center line and place transverse steel radially. The bar lengths & dimensions shall vary uniformly throughout transition. Longitudinal bars shall be continued through the joints with the transition structure.
3. The concrete thickness shall be that of the double box section.
4. Plan as shown is for double box section downstream. When double box section is upstream taper the last 2 feet of center wall to end in 1 1/2 inch radius.
5. f'c = 3000 p.s.i. at 28 days.
6. Transverse joint keyways, as detailed for longitudinal joint keyways at base of outer walls on the project drawings, shall be placed in both slabs and walls at the end of each pour.

REFERENCES	REVISIONS			LOS ANGELES COUNTY FLOOD CONTROL DISTRICT
	MARK	DATE	DESCRIPTION	TRANSITION STRUCTURE NO. 4
				APPROVED BY — CHIEF ENGINEER
SUBMITTED BY	RECOMMENDED BY — DIVISION ENGINEER (DESIGN)			DATE APR. 54 — NO 260 198 — SHEET OF

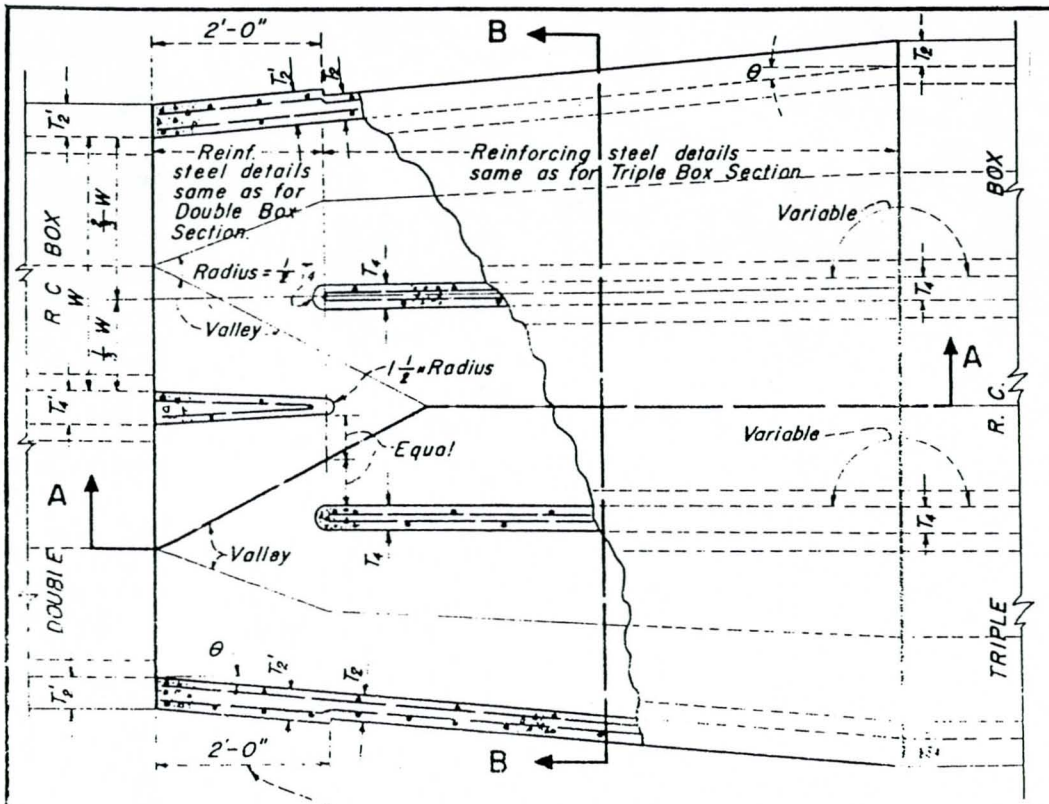

SECTIONAL PLAN

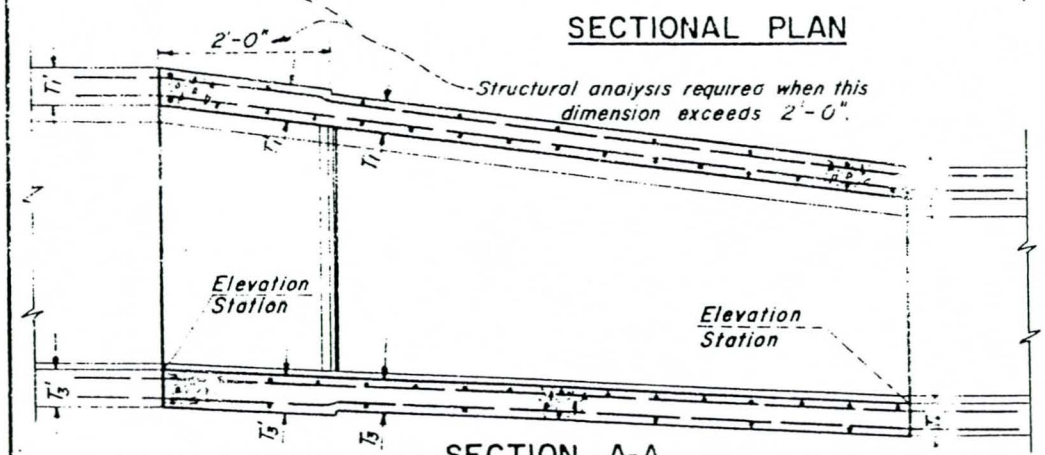

SECTION A-A

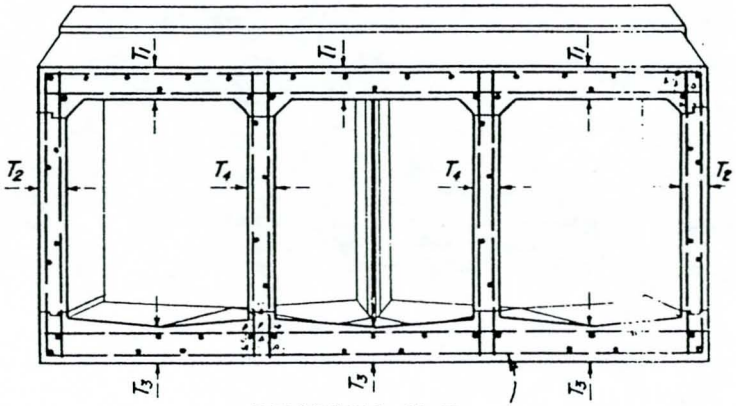

SECTION B-B

Steel pattern shown is pictorial only. See project drawings for actual steel layout

NOTES:

1. Horizontal angle of divergence or convergence, θ, shall not exceed 5°45'.
2. Reinforcing bar steel size, spacing, and outside cover shall be that of the adjoining box section within the limits indicated on the drawing. For curved transitions space bars on centerline, and place transverse steel radially. Bar lengths & dimensions shall vary uniformly thru-out transition. Longitudinal bars shall be continued through the joints with the transition structure.
3. Concrete thickness shall be that of adjoining box section within the limits indicated on the drawing.
4. Plan as shown is for Triple Box Section downstream. When Triple Box Section is upstream reverse the radius at ends of division walls as follows:
   (a) Taper the last two feet of Triple Box division walls to end in 1 1/2 inch radius.
   (b) The two foot extension of center wall of Double Box to be of uniform thickness, T_4', ending in radius $\frac{1}{2}$ T_4'.
5. $f_c' = 3000$ p.s.i. at 28 days.
6. Transverse joint keyways, as detailed for longitudinal joint keyways at base of outer walls on the project drawings, shall be placed in both slabs and walls at the end of each pour.

REFERENCES	REVISIONS			LOS ANGELES COUNTY FLOOD CONTROL DISTRICT
	MARK	DATE	DESCRIPTION	TRANSITION STRUCTURE NO.6
				APPROVED BY J. E. Hedger, CHIEF ENGINEER
SUBMITTED BY GWO	RECOMMENDED BY W. B. Ream by GWO, DIVISION ENGINEER (DESIGN)			DATE APR. '54 — NO. 2-0200 — SHEET OF

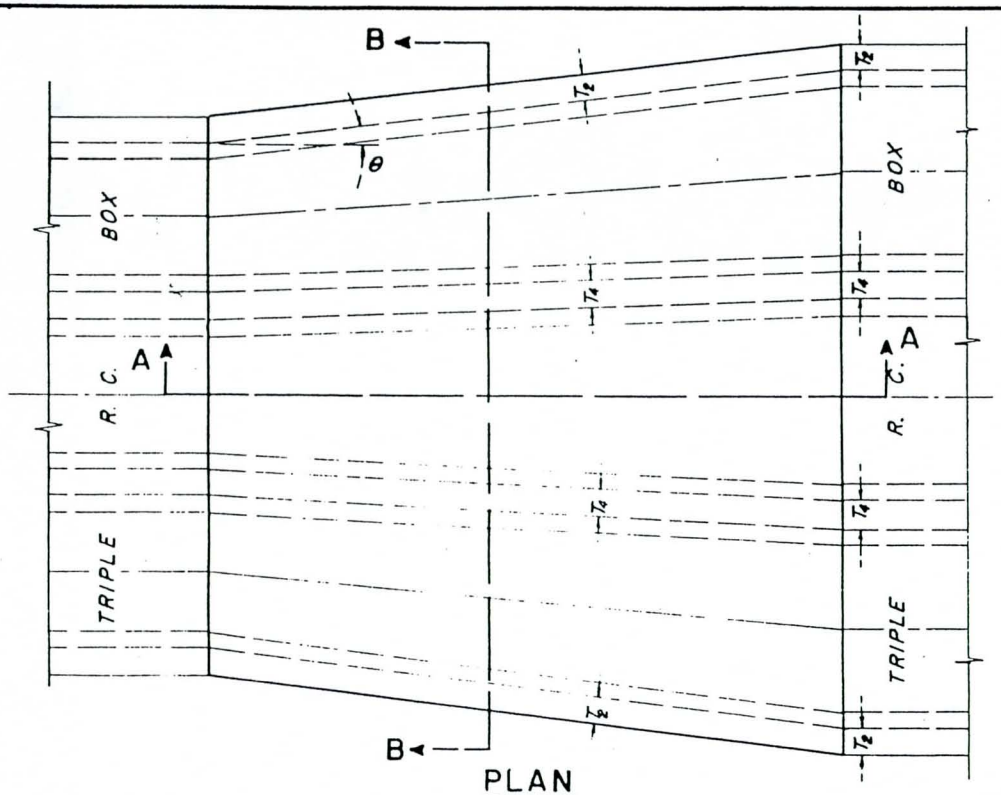

PLAN

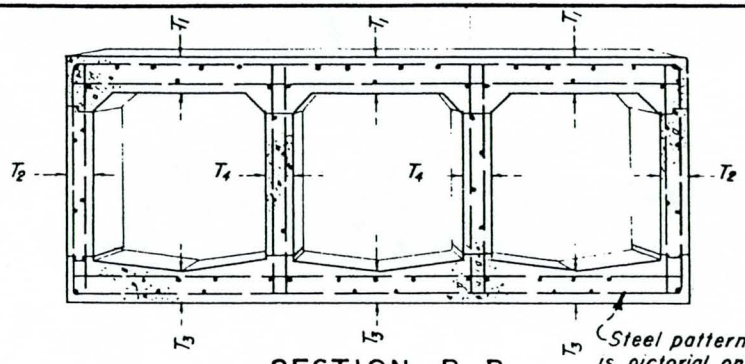

SECTION B-B

Steel pattern shown is pictorial only. See project drawings for actual steel layout.

NOTES

1. The horizontal angle of divergence or convergence, θ, shall not exceed 5°45'.
2. Reinforcing steel bar size, spacing and outside cover shall be that of the larger section. For curved transitions, space bars on center line and place transverse steel radially. Bar lengths & dimensions shall vary uniformly throughout transition. Longitudinal bars shall be continued through the joints with the transition structure.
3. The concrete thickness shall be that of the larger box section.
4. f'c = 3000 p.s.i. at 28 days.
5. Transverse joint keyways, as detailed for longitudinal joint keyways at base of outer walls on the project drawings, shall be placed in both slabs and walls at the end of each pour.

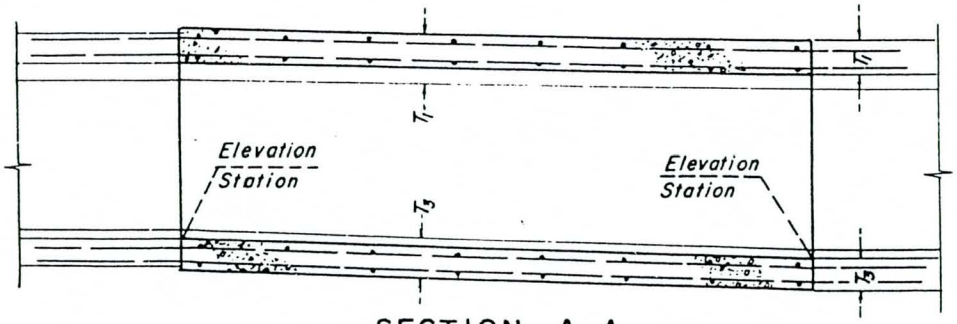

SECTION A-A

REFERENCES	REVISIONS			LOS ANGELES COUNTY FLOOD CONTROL DISTRICT
	MARK	DATE	DESCRIPTION	TRANSITION STRUCTURE NO. 7
				APPROVED BY N. E. Helms CHIEF ENGINEER
SUBMITTED BY	RECOMMENDED BY W. Wolheam by GWO DIVISION ENGINEER (DESIGN)			DATE APR'54 NO. 2-D201 SHEET OF

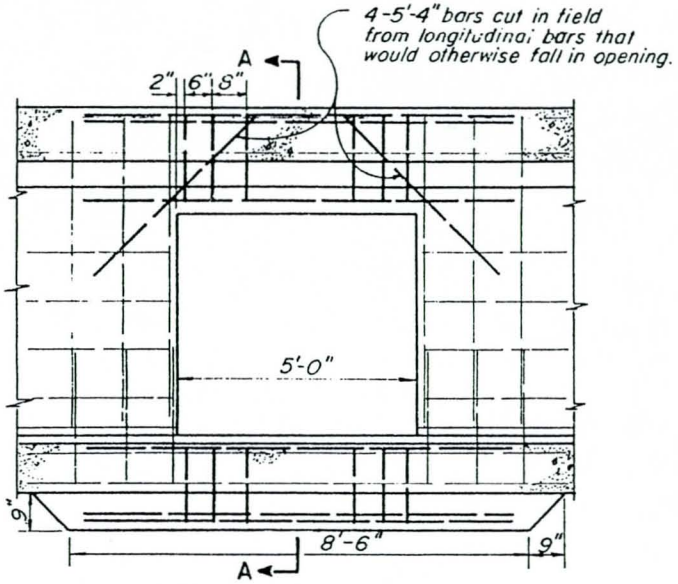

ELEVATION

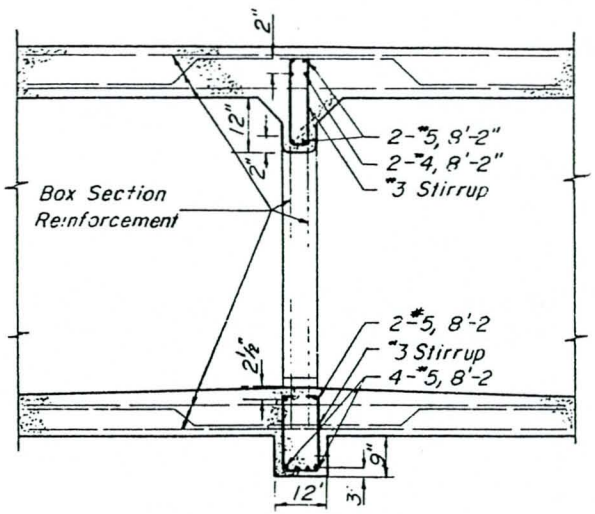

SECTION A-A

NOTES:

1. This structure to be used where:
   a. Depth of cover does not exceed 10'.
   b. Clear span of one barrel does not exceed 12'.
2. Place two pairs of center wall vertical bars that would otherwise fall in opening 2" from face of opening.
3. Longitudinal bars to be cut in field 2" from opening.
4. Round all edges to 2" radius.
5. No transverse construction joint to be placed within 30" of window.

REFERENCES	REVISIONS			LOS ANGELES COUNTY FLOOD CONTROL DISTRICT
	MARK	DATE	DESCRIPTION	WINDOW DETAILS FOR MULTIPLE BOX SECTION
				APPROVED BY H. E. Veden 7/26/54 CHIEF ENGINEER
SUBMITTED BY GWO	RECOMMENDED BY W. B. Ream by GWO DIVISION ENGINEER (DESIGN)			DATE July, '54 / NO. 2-D205 / SHEET 1 OF 1

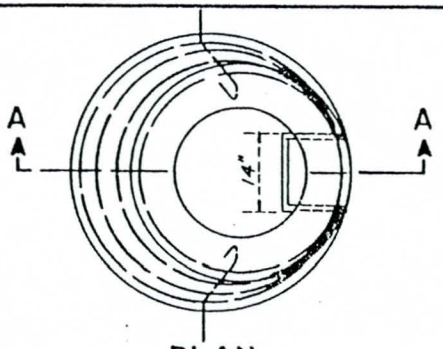

PLAN

NOTES:

1. If "H" is less than 1'-6", W=2'-0"
   If "H" is between 1'-6" and 2'-6", W= 2'-6".
   If "H" is 2'-6" or more, W= 3'-0".
   If "H" is more than 4'-0½", bring walls vertically to 4'-0½" below surface and taper from 3'-0" to 2'-0" as shown.
2. This structure shall be used with Standard Pressure Manhole Frame and Cover, Std. Dwg. 2-D197. It may be used for hydrostatic heads up to 25' above the steel plate.
3. Where "Pressure Manhole No. 1, 2, 3 or 4" is specified on the storm drain plans, Standard Pressure Manhole shaft per this standard and Standard Pressure Manhole Frame and Cover per Std. Dwg. 2-D197 shall be substituted for Concrete Rings, Reducer and Pipe, Std. Dwg. 2-D107 and Standard Non-Rocking Manhole Frame and Cover Std. Dwg. 2-D191 respectively and for Sec. C-C, (M.H. No. 1) or Detail M (M.H. No. 2 & M.H. No. 4).
4. f'_c=3000 p.s.i. at 28 days.
5. △ See Contract Specifications for physical requirements of waterstop.

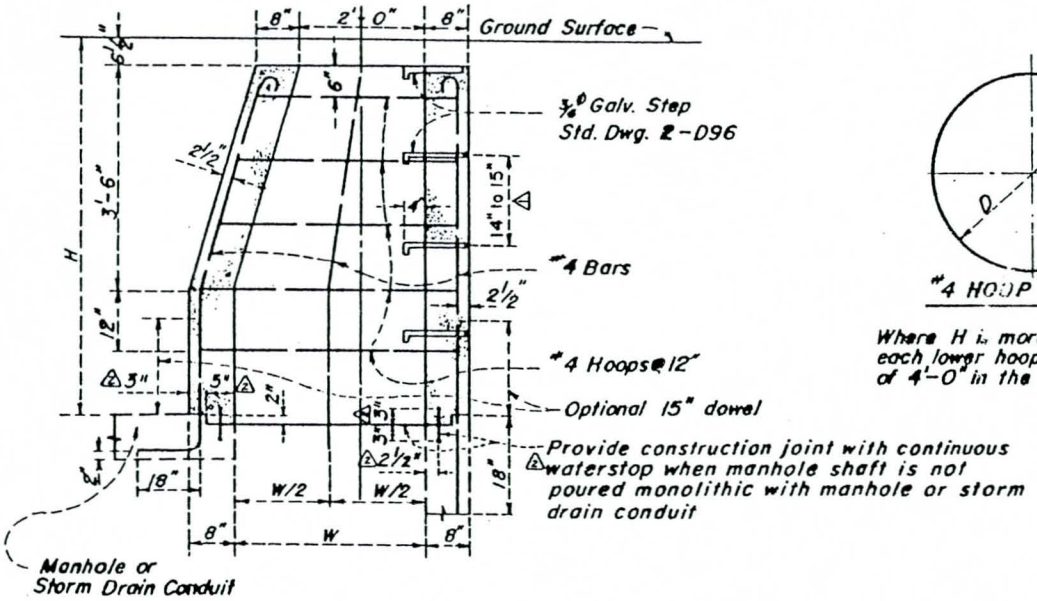

SECTION A-A

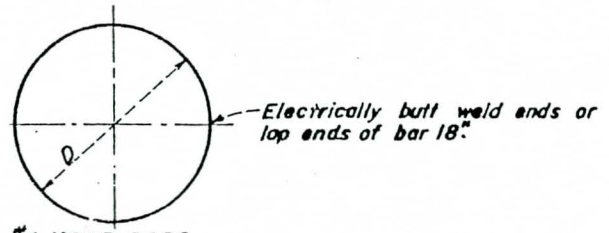

#4 HOOP BARS

Where H is more than 4'-0", D=3'-1¾" for topmost hoop in shaft; each lower hoop in succession increases 3½" in diameter to a maximum of 4'-0" in the vertical portion of the shaft.

REFERENCES	REVISIONS			LOS ANGELES COUNTY FLOOD CONTROL DISTRICT
2-D197 2-D96	MARK	DATE	DESCRIPTION	STANDARD PRESSURE MANHOLE SHAFT
	△	11-5-70	Step Spacing	
	△	5-18-72	Add-waterstop & Note 5	APPROVED BY W. E. Hedger 11/1/71 CHIEF ENGINEER
SUBMITTED BY GWO	RECOMMENDED BY W. S. Beam DIVISION ENGINEER (DESIGN)			DATE Oct. 54 NO. 2-D210 SHEET OF

DESIGN DATA

$$\text{D-LOAD} = \frac{(\text{DEAD + LIVE LOADS ON TOP OF PIPE})(\text{SAFETY FACTOR})}{(\text{LOAD FACTOR})(\text{INSIDE DIAMETER})}$$

SAFETY FACTOR = 1.25
LOAD FACTOR (SEE APPLICABLE DRAWING)
LIVE LOAD (SEE APPLICABLE DRAWING)
EARTH LOAD PER MARSTON'S FORMULA
D-LOAD WILL PRODUCE A 0.01 INCH CRACK UNDER THE THREE EDGE BEARING METHOD
DESIGN DENSITY = (0.90)(MAX. DRY DENSITY)(1.00 + OPTIMUM MOISTURE)

INDEX TO STANDARD DRAWING 2-D213.1 to .27

SHEET NO.	DESIGN DENSITY (p.c.f.)	LIVE LOAD	DESCRIPTION
1			Index, General Notes, and Design Data
2	110	1 H20-S16 Truck	Earth Cover 1-10 feet, Projection Condiction with Unrestricted Trench Width and Earth Cover 11-25 feet, Trench Condition with Trench Width equal to Outside Diameter plus 20 inches, Load Factor 1.8
3	120		
4	130		
5	140		
6	110 and 120	1 H20-S16 Truck	Earth Cover 11-25 feet, Trench Condition with trench width equal to Outside Diameter plus 20 inches, Load Factor 2.1
7	130 and 140		
8	110 and 120	1 H20-S16 Truck	Earth Cover 11-25 feet, Projection Condition with unrestricted trench width. Load Factor Variable (See Note 7)
9	130 and 140		
10	110 and 120	1 H20-S16 Truck STATE HIGHWAY	Earth Cover 11-25 feet, Trench Condition with trench width equal to Outside Diameter plus 48 inches. Load Factor 1.8
11	130 and 140		
12	110	RAILROAD COOPER'S E75	Earth Cover from bottom of ties 4-25 feet, Jacked R.C.P. with trench width equal to Outside Diameter. Load Factor 1.8
13	120		
14	130		
15	140		
16	110	RAILROAD COOPER'S E72	
17	120		
18	130		
19	140		
20	110	RAILROAD COOPER'S E75	Earth Cover from bottom of ties 2-25 feet, Trench Condition with trench width equal to Outside Diameter plus 20 inches. Load Factor 1.8
21	120		
22	130		
23	140		
24	110	RAILROAD COOPER'S E72	
25	120		
26	130		
27	140		

GENERAL NOTES

1. CONCRETE BACKFILL – Use as indicated on applicable sheet and on all pipe with less than 1 foot of cover. Refer to Standard Drawing 2-D177.
2. CROSS-HATCHED AREA – Check with pipe plant for availability of required D-LOAD or use bedding with a higher load factor.
3. STATE HIGHWAY REQUIREMENTS
   a. Minimum D-LOAD = 1350 D
   b. Classification
      Class I = 800 D Class IV 2000 D
      Class II = 1000 D Class V 3000 D
      Class III = 1350 D
   c. For earth covers greater than 10 feet provide two alternate D-LOADS, Trench Condition with trench width equal to O.D. + 20" and O.D. + 48".
4. RAILROAD REQUIREMENTS
   a. Minimum D-LOADS and Cooper's Loading
      A.T. & S.F. R.R. 3000 D E72
      S.P. R.R. 2000 D E72
      U.P. R.R. 2000 D E75
      P.E. R.R. 2000 D E72
   b. Minimum earth cover for Jacked R.C.P. equals 6 feet.
5. For truck loading with earth covers of 10 feet or less, pipe shall be designed for positive projection condition.
6. For covers greater than 10 feet, pipe shall be designed for the applicable condition.
7. Load factor, for positive projection with earth covers greater than 10 feet, was computed using Spangler's Formula: N = 0.707, p = 1.

DRAWN BY	REVISIONS		
G.D.M.	MARK	DATE	DESCRIPTION
CHECKED BY V.C.M.			
DESIGNED BY F.W.R.			
SUBMITTED BY C.W.H.			

SUPERSEDES DRAWING OF THE SAME NUMBER DATED 12/54

LOS ANGELES COUNTY
FLOOD CONTROL DISTRICT

"D" LOAD TABLE FOR
DESIGN OF REINFORCED
CONCRETE PIPE

RECOMMENDED BY: DIVISION ENGINEER (DESIGN)
APPROVAL RECOMMENDED BY: ASS'T CHIEF DEPUTY ENGINEER
APPROVED BY: CHIEF ENGINEER 12/22/70

SCALE	DATE	DWG. NO. 2-D213.1
NONE	DEC. '70	SHEET 1 OF 27

REQUIRED "D" LOAD FOR REINFORCED CONCRETE PIPE LAID PER STD. DWG. 2-D 177

CASE III BEDDING DESIGN DENSITY = 120 p.c.f.

PIPE SIZE	DEPTH OF COVER IN FEET																											PIPE SIZE
	1	1.25	1.5	1.75	2	3	4	5	6	7	8	9	10	11	12	13	14	15	16	17	18	19	20	21	22	23	24	25	
12	2000	2000	1500	1500	1500	1250	1250	1500	1750	1750	2000	2250	2500	2000	2000	2250	2250	2250	2500	2500	2500	2500	2500	2750	2750	2750	2750	2750	12
15	CONCRETE					1000		1250	1500					1750		2000	2000	2000	2250	2250	2250	2250		2500	2500	2500	2500	2500	15
18	BACKFILL										1750	2000	2250		1750	1750			2000	2000			2250	2250	2250				18
21		1500	CONCRETE		1250		1000		1250	1500				1500			1750				2000					2250	2250	2250	21
24	1500												2000		1500			1750				2000	2000						24
27		BACKFILL		1500				1000				1750							1750										27
30											1500					1500								2000					30
33		1750	1500							1250										1750					2000				33
36																													36
39	1900	1500	1400	1300	1100				1100	1200	1400	1500	1800	1300	1400		1500	1600	1700	1700	1800	1500	1900			2100	2100	2200	39
42	1500	1400	1300	1200								1500	1700			1400						1800						2100	42
45	1400	1300							1000		1300																		45
48			1200	1100	1000										1300				1600					1900					48
51	1300	1200	1100	1000						1100			1600	1200												2000			51
54	1200											1400																	54
57		1100	1000															1500										2200	57
60					900	800	800	900			1200										1700								60
63			1050	950	850			850	950	1050		1350	1500			1350	1450			1450			1850		1950			2150	63
66	1250	1150						800	900						1250											2050			66
69											1150	1300																	69
72	1300	1200	1100	1000						1000			1450	1150			1400		1550										72
75	1300				900																								75
78		1250																											78
81	1400		1150								1100	1250	1400																81
84		1300																							2000				84
87	1450			1050					850							1300													87
90			1200																							2050	2100	2150	90
93	1900	1250								950		1200	1350																93
96			1300	1150																									96
102	1350	1400	1200	1000							1050																	2200	102
108			1250	1050									1300		1200			1450											108

Projection Condition — Unrestricted Trench Width

Trench Condition — Trench Width = O.D. + 20 inches

DATA:

Load factor = 1.8

Live load - 1 H 20 S 16 truck.

NOTE:

For General Notes see Sheet 1.

DRAWN BY	REVISIONS		
S.Y.H.	MARK	DATE	DESCRIPTION
CHECKED BY Y.C.			
DESIGNED BY J.C.			
SUBMITTED BY C.W.H.			

LOS ANGELES COUNTY
FLOOD CONTROL DISTRICT

"D" LOAD TABLE FOR DESIGN OF REINFORCED CONCRETE PIPE

RECOMMENDED BY — DIVISION ENGINEER (MAPPING)

APPROVAL RECOMMENDED BY — ASS'T CHIEF DEPUTY ENGINEER

APPROVED BY — CHIEF ENGINEER 12/22/70

SCALE	DATE	DWG. NO. 2-D213 3
NONE	DEC '70	SHEET 3 OF 27

REQUIRED "D" LOAD FOR REINFORCED CONCRETE PIPE LAID PER STD. DWG. 2-D 177

CASE III BEDDING DESIGN DENSITY = 130 pcf

PIPE SIZE	DEPTH OF COVER IN FEET																											PIPE SIZE
	1	1.25	1.5	1.75	2	3	4	5	6	7	8	9	10	11	12	13	14	15	16	17	18	19	20	21	22	23	24	25	
12	2000	CONC		1500		1250	1250	1500	1750	2000	2250	2500	2750	2250	2250	2250	2500	2500	2500	2750	2750	2750	2750	2750	3000	3000	3000	3000	12
15	BACK-	CONCRETE		BACKFILL						1750	2000	2250	2500	2000	2000		2250	2250	2250	2500	2500	2500	2500	2500	2750	2750	2750	2750	15
18	FILL					1000		1250	1500					1750		2000	2000			2250	2250				2500	2500	2500	2500	18
21			1750	1500	1250							2000	2250		1750			2000	2000			2250	2250						21
24	1500						1000			1500	1750					1750				2000				2250					24
27									1250					1500			1750								2250				27
30																					2000					2250			30
33												1750	2000		1500			1750											33
36		1750	1500					1000			1500											2000					2250		36
39	1800	1500	1400	1300	1200				1100	1300		1700	1900	1400		1600	1700	1700	1800	1900			2100	2100	2200	2200	2300	2300	39
42	1500	1400	1300	1200	1100												1600				1900								42
45	1400										1400	1600	1800																45
48		1300	1200	1100	1000					1200						1500				1800			2000						48
51	1300													1300	1400														51
54	1200	1200	1100	1000								1500	1700																54
57									1000		1300								1700										57
60					900	800	800	900																					60
63										1150		1450	1650			1450	1550	1650			1850	1950		2050	2150		2250		63
66	1250							850		1100	1250		1600		1350														66
69	1300											1400						1600											69
72									950				1550	1250															72
75	1350																												75
78											1200	1350								1750								2350	78
81	1400	1250								1050			1500															2350	81
84																	1500												84
87	1450	1300	1150	1000																		1900							87
90								800	900															2050	2150	2300	2300		90
93	1500	1350	1200	1050							1150	1300	1450																93
96																1400													96
102	1650									1000												1950		2100					102
108												1250	1400													2250			108

Projection Condition — Unrestricted Trench Width

Trench Condition — Trench Width = O. D. + 20 inches

DATA:

Load factor = 1.8

Live load - 1 H20 - S16 truck

NOTE:

For General Notes see Sheet 1.

DRAWN BY	REVISIONS		
J.C.D.	MARK	DATE	DESCRIPTION
CHECKED BY B.S.			
DESIGNED BY J.J.S.			
SUBMITTED BY C.W.H.			

LOS ANGELES COUNTY
FLOOD CONTROL DISTRICT

"D" LOAD TABLE FOR DESIGN OF REINFORCED CONCRETE PIPE

RECOMMENDED BY D. Milne — DIVISION ENGINEER (DESIGN)

APPROVAL RECOMMENDED BY C. Magnuson — ASS'T CHIEF DEPUTY ENGINEER

APPROVED BY A. E. Bumgardner 12/22/70 — CHIEF ENGINEER

SCALE	DATE	DWG. NO. 2-D213.4
NONE	DEC '70	SHEET 4 OF 27

REQUIRED "D" LOAD FOR REINFORCED CONCRETE PIPE LAID PER STD. DWG. 2-D 177

CASE III BEDDING DESIGN DENSITY = 140 p.c.f.

PIPE SIZE	DEPTH OF COVER IN FEET																											PIPE SIZE
	1	1.25	1.5	1.75	2	3	4	5	6	7	8	9	10	11	12	13	14	15	16	17	18	19	20	21	22	23	24	25	
12	2000	CONC.	1500	1500	1500	1250	1500	1750	1750	2250	2500	2750	3000	2250	2500	2500	2500	2750	2750	2750	3000	3000	3000	3000	3000	3250	3250	3250	12
15	BKFILL	1500					1250	1500		2000	2250	2500	2750	2000	2250	2250	2250	2500	2500	2500	2750	2750	2750	2750	2750	3000	3000	3000	15
18		CONCRETE		BACKFILL						1750	2000	2250	2500		2000			2250			2500	2500	2500			2750	2750	2750	18
21						1000			1500					1750		2000	2000		2250	2250				2500	2500				21
24	1500		2000	1750	1250			1250							1750						2250					2500			24
27							1000				1750	2000	2250					2000				2250					2500		27
30		2000	1750	1500						1500						1750			2000				2250					2500	30
33																													33
36		1750	1500						1250					1500						2000									36
39	1700	1600		1400	1200			1100	1200	1400	1600	1800	2000		1600	1700	1800	1900			2100	2200	2200	2300	2300	2400			39
42	1600	1500	1400	1300				1000											1900								2400		42
45	1500	1400	1300	1200	1100					1300	1500	1700						1800				2100							45
48	1400	1300	1200	1100	1000								1900				1700												48
51	1300								1100					1400	1500	1600													51
54	1200	1200	1100									1600									2000								54
57				1000							1400		1800																57
60					900	800	900			1200																			60
63		1150					850	950	1050		1350	1550	1750				1650	1750	1850	1950			2150	2200		2350			63
66	1250	1200						900								1550				1900									66
69	1300						800					1500	1700	1350	1450												2450		69
72										1150												2050							72
75	1350	1250	1150	1050		750			1000		1300		1650																75
78	1400	1300										1450							1800					2250					78
81																									2300	2350	2450	2500	81
84	1450	1350	1200										1600																84
87										1100	1250															2400			87
90	1500							850				1400										2050	2150	2250					90
93		1400	1250	1100	950													1700										2550	93
96									950				1550																96
102	1550															1500	1800												102
108	1600	1450	1300	1150			750			1050	1200	1350	1500	1300	1400														108

Projection Condition — Unrestricted Trench Width

Trench Condition — Trench Width = O.D. + 20 inches

DATA:

Load factor = 1.8

Live load - 1 H20 - S16 truck

NOTE

For General Notes see Sheet 1.

DRAWN BY	REVISIONS		
S.Y.H.	MARK	DATE	DESCRIPTION
CHECKED BY J.J.S.			
DESIGNED BY G.S.			
SUBMITTED BY C.W.H.			

LOS ANGELES COUNTER
FLOOD CONTROL DISTRICT

"D" LOAD TABLE FOR DESIGN OF REINFORCED CONCRETE PIPE

RECOMMENDED BY: DIVISION ENGINEER (MAPS)

APPROVAL RECOMMENDED BY: ASS'T CHIEF DEPUTY ENGINEER

APPROVED BY: CHIEF ENGINEER 12/22/70

SCALE	DATE	DWG. NO. 2-D213.5
NONE	DEC. '70	SHEET 5 OF 27

REQUIRED "D" LOAD FOR REINFORCED CONCRETE PIPE LAID PER STD. DWG. 2-D 177

CASE I BEDDING

PIPE SIZE	DEPTH OF COVER IN FEET 11	12	13	14	15	16	17	18	19	20	21	22	23	24	25	11	12	13	14	15	16	17	18	19	20	21	22	23	24	25	PIPE SIZE
12	1500	1750	1750	1750	1750	2000	2000	2000	2000	2000	2000	2000	2250	2250	2250	1750	1750	2000	2000	2000	2000	2000	2250	2250	2250	2250	2250	2250	2250	2500	12
15		1500	1500			1750	1750	1750	1750				2000	2000	2000	1500	1750	1750	1750	1750			2000	2000	2000	2000				2250	15
18	1250			1500	1500					1750	1750	1750					1500	1500			1750	1750					2000	2000	2000	2000	18
21		1250				1500	1500						1750	1750					1500				1750	1750							21
24			1250					1500							1750	1250				1500					1750						24
27									1500								1250				1500					1750					27
30				1250																							1750				30
33										1500												1500						1750			33
36					1250													1250													36
39	1000	1100	1200	1200	1300	1300	1400	1400			1600	1600	1600	1700	1700	1100	1200	1300	1300	1400	1400		1600	1600	1600	1700	1700	1800	1800	1900	39
42			1100								1500							1200					1500							1800	42
45																															45
48					1200																										48
51							1300		1400								1100			1300											51
54		1000																													54
57																														1900	57
60																						1400									60
63	950		1050	1150		1250		1350		1450		1550		1650		1000		1150	1250		1350			1550		1650		1750		1850	63
66																															66
69				1100															1200				1450								69
72																															72
75	900																														75
78																															78
81																	1050														81
84					1150																										84
87																															87
90																				1250											90
93																															93
96		950																													96
102																															102
108																														1900	108

Trench Condition - Design Density = 110 P.C.F.
Trench Width = O.D. + 20"

Trench Condition — Design Density = 120 P.C.F.
Trench Width = O.D. + 20"

DATA:

Load factor = 2.1
Live load - 1 H20 - S16 truck.

NOTE:

See General Notes on Sheet 1.

DRAWN BY	REVISIONS		
G.D.M.	MARK	DATE	DESCRIPTION
CHECKED BY Y.C.			
DESIGNED BY F.C.			
SUBMITTED BY C.W.H.			

LOS ANGELES COUNTY
FLOOD CONTROL DISTRICT

"D" LOAD TABLE FOR
DESIGN OF REINFORCED
CONCRETE PIPE

RECOMMENDED BY D. Mulhe DIVISION ENGINEER (DESIGN)
APPROVAL RECOMMENDED BY C. Thompson ASST. CHIEF DEPUTY ENGINEER
APPROVED BY A. E. Remington 12/22/70 CHIEF ENGINEER

SCALE	DATE	DWG. NO. 2-D213.6
NONE	DEC. '70	SHEET 6 OF 27

REQUIRED "D" LOAD FOR REINFORCED CONCRETE PIPE LAID PER STD. DWG. 2-D 177

CASE I BEDDING

PIPE SIZE	DEPTH OF COVER IN FEET 11	12	13	14	15	16	17	18	19	20	21	22	23	24	25	11	12	13	14	15	16	17	18	19	20	21	22	23	24	25	PIPE SIZE
12	1750	2000	2000	2000	2250	2250	2250	2250	2250	2500	2500	2500	2500	2500	2500	2000	2000	2250	2250	2250	2500	2500	2500	2500	2500	2750	2750	2750	2750	2750	12
15		1750	1750		2000	2000	2000			2250	2250	2250	2250	2250		1750		2000	2000	2000	2250	2250	2250	2250		2500	2500	2500	2500	2500	15
18	1500			1750	1750			2000	2000	2000					2250		1750	1750			2000	2000			2250	2250	2250				18
21		1500				1750					2000	2000				1500			1750				2000					2250	2250	2250	21
24			1500				1750						2000				1500			1750					2000	2000					24
27				1500				1750						2000							1750										27
30	1250								1750						2000			1500								2000					30
33					1500																	1750					2000				33
36										1750																					36
39	1200	1300	1400	1400		1600	1600	1700	1700	1800	1800	1900	1900			1300	1400		1500	1600	1700	1700	1800	1900	1900			2100	2100	2200	39
42			1300															1400						1800						2100	42
45						1500																									45
48								1600									1300				1600					1900					48
51		1200														1200												2000			51
54					1400																										54
57	1100									1700										1500										2200	57
60																							1700								60
63			1250	1350		1450	1550		1650			1850		1950				1350	1450			1650			1850		1950			2150	63
66											1750						1250											2050			66
69																															69
72		1150		1300												1150			1400		1550										72
75											1800																				75
78							1500																								78
81																															81
84																											2000				84
87	1050																	1300													87
90																												2050	2100	2150	90
93																															93
96			1800																												96
102					1350										2050															2200	102
108																	1200			1450											108

Trench Condition - Soil Weight = 130 P.C.F.
Trench Width = O.D. + 20"

Trench Condition - Soil Weight = 140 P.C.F.
Trench Width = O.D. + 20"

DATA:

Load factor = 2.1

Live load - 1 H20 - S16 truck

NOTE:

See General Notes on Sheet 1.

DRAWN BY	REVISIONS		
J.C.D.	MARK	DATE	DESCRIPTION
CHECKED BY G.S.			
DESIGNED BY J.J.S.			
SUBMITTED BY C.W.H.			

LOS ANGELES COUNTY
FLOOD CONTROL DISTRICT

"D" LOAD TABLE FOR
DESIGN OF REINFORCED
CONCRETE PIPE

RECOMMENDED BY: DIVISION ENGINEER (DESIGN)

APPROVAL RECOMMENDED BY: ASS'T CHIEF DEPUTY ENGINEER

APPROVED BY: A. E. Bennington, CHIEF ENGINEER 12/22/70

SCALE	DATE	DWG. NO. 2-D213.7
NONE	DEC. '70	SHEET 7 OF 27

REQUIRED "D" LOAD FOR REINFORCED CONCRETE PIPE LAID PER STD. DWG. 2-D 177

CASE III BEDDING

DEPTH OF COVER IN FEET

PIPE SIZE	11	12	13	14	15	16	17	18	19	20	21	22	23	24	25
12	2000	2250	2500	2750	3000	3500	4000	4750	5500	6500	7750	8250			
15		2000	2250			3000	3250	3500	4000	4500	5000	5750	6750	7750	9000
18				2250	2500			3000	3250	3750	4000	4500	5000	5500	6250
21		1750							3000	3250	3500	3750	4000	4500	5000
24											3250	3500	3750	4000	4250
27				2000		2250			2750				3500	3750	4000
30								2500			3000				3750
33	1500												3250	3500	
36															
39	1300	1400	1600	1700	1900	2000	2200	2300		2600	2700	2900	3000	3200	3300
42					1800		2100		2400					3100	
45	1200		1500			1900		2200		2500		2800			3200
48		1300		1600					2300		2600		2900		
51					1700		2000			2400		2700		3000	
54	1100		1400			1800		2100					2800		3100
57		1200		1500	1600		1900		2200	2300	2500	2600		2900	
60			1300			1700		2000					2700		3000
63		1150		1400	1550		1850	1950	2100	2250	2400	2550		2800	2950
66			1250			1650	1800			2200	2350	2500	2650	2800	2900
69				1350	1500		1750	1900	2050		2300	2450	2600	2750	2900
72						1600			2000	2150			2550		2850
75	1050				1450		1700	1850		2100	2250	2400	2550	2700	2800
78			1200	1300		1550		1800	1950			2350	2500	2650	
81					1400		1650			2050	2200	2350	2500	2800	2750
84						1500			1900		2150	2300	2450		2700
87				1250				1750		2000		2300	2400	2550	
90					1350		1600		1850		2100	2250			2650
93				1200		1450		1700		1950	2100		2350	2500	
96							1550		1800		2050	2200		2450	2600
102				1150			1500	1650	1750	1900	2050	2150	2300	2400	2550
108		1100						1600		1850	2000	2100	2250	2350	2500

Projection Condition - Design Density = 110 p.c.f.
Unrestricted Trench Width

PIPE SIZE	11	12	13	14	15	16	17	18	19	20	21	22	23	24	25
12	2250	2500	2750	3000	3500	4000	4500	5250	6000	7250	8500	10000	10000	10000	10000
15		2250		2500		3250	3500	4000	4500	5000	5500	6500	7250	8500	9750
18		2000			2750			3250	3750	4000	4500	5000	5500	6000	6750
21								3000		3500	3750	4250	4500	5000	5500
24									3250			3750	4000	4250	4750
27		1750		2250				2750						4000	4250
30	1500		2000			2500						3500	3750		4000
33									3000						
36											3250				3750
39	1400	1600	1700	1900	2100	2200	2400	2500	2700	2900	3000	3200	3400	3500	3700
42		1500		1800	2000		2300			2800		3100	3300		3600
45	1300		1600			2100		2400	2600		2900		3200	3400	
48					1900		2200			2700		3000			3500
51		1400		1700		2000			2500		2800			3300	
54	1200		1500		1800			2300		2600			3100		3400
57							2100		2400			2900		3200	
60		1300		1600		1900		2200			2700		3000	3200	3500
63			1450		1750		2050		2350	2500	2650	2800	2950	3100	
66		1250	1400	1550	1700	1850	2000	2150	2300	2450	2600	2750	2950		3250
69				1500	1650	1800	1950	2100	2250	2400			2900	3050	3200
72	1100		1350								2550	2700	2850	3000	3150
75					1600	1750	1900	2050	2200	2350	2500	2650	2800	2950	
78				1450											3400
81					1550	1700	1850	2000	2150	2300	2450	2600	2750	2900	3050
84				1400				1950	2100	2250	2400	2550	2700	2850	3000
87			1300			1650	1800								
90					1500			1900	2050	2200	2350	2500	2650	2800	2950
93						1600	1750								
96									2000	2150	2300	2450	2600	2750	2900
102						1550	1700	1850	1950	2100	2250	2400	2550	2700	2850
108		1200			1450		1650	1800		2050	2200	2300	2500	2650	2800

Projection Condition - Design Density = 120 p.c.f.
Unrestricted Trench Width

DATA:

Load factor = Variable
Live Load - IH 20-S16 truck.

NOTE:

For General Notes see Sheet 1.

DRAWN BY	REVISIONS		
S.Y.H.	MARK	DATE	DESCRIPTION
CHECKED BY J.C.			
DESIGNED BY Y.C.			
SUBMITTED BY C.W.H.			

LOS ANGELES COUNTY
FLOOD CONTROL DISTRICT

"D" LOAD TABLE FOR
DESIGN OF REINFORCED
CONCRETE PIPE

RECOMMENDED BY — DIVISION ENGINEER (DESIGN)
APPROVAL RECOMMENDED BY — ASS'T CHIEF/DEPUTY ENGINEER
APPROVED BY — CHIEF ENGINEER 12/22/70

SCALE	DATE	DWG. NO. 2-D213.8
NONE	DEC. '70	SHEET 8 OF 27

REQUIRED "D" LOAD FOR REINFORCED CONCRETE PIPE LAID PER STD. DWG. 2-D 177

CASE III BEDDING

PIPE SIZE	DEPTH OF COVER IN FEET 11	12	13	14	15	16	17	18	19	20	21	22	23	24	25	11	12	13	14	15	16	17	18	19	20	21	22	23	24	25	PIPE SIZE
12	2250	2500	3000	3250	3750	4250	5000	5750	6750	7750						2500	2750	3250	3500	4000	4500	5250	6250	7250	8500						12
15			2500	2750	3250	3500	3750	4250	4750	5500	6000	7000	8000	9250		2250	2500	2750	3000	3500	3750	4250	4500	5250	5750	6500	7500	8750	10,000	10,000	15
18	2000	2250			3000	3000	3500	3750	4000	4500	4750	5750	6000	6500	7500					3000	3500	3750	4000	4250	4750	5250	5750	6500	7250	8000	18
21			2250	2500	2750		3250	3500	3750	4000	4250	4500	5000	5500	6000	2000	2250	2500	2750		3250	3500	3750	4000	4250	4500	5000	5250	5750	6500	21
24		2000				2750	3000	3250	3500	3750	4000	4250	4500	4750	5000					2750				3750	4000	4250	4500	4750	5250	5500	24
27	1750				2500			3000	3250	3500	3750	4000	4250	4500	4750			2250	2500		3000	3250	3500					4500	4750	5000	27
30				2250							3500	3750	4000	4250	4500		2000							3500	3750	4000	4250				30
33			2000			2500	2750			3250				4000	4250	1750					2750	3000	3250					4500	4750		33
36		1750							3000				3750							2500				3250	3500	3750	4000	4250	4250	4500	36
39	1500	1700	1900	2100	2200	2400	2600	2800		3100	3300	3500	3700	3900	4000	1700	1900	2100	2300	2400					3400	3600	3800	4000	4200	4400	39
42			1800	2000				2700	2900			3400	3600	3800		1600	1800	2000	2200		2600	2800	3000	3200							42
45		1600				2300	2500			3000	3200			3700	3800										3300	3500	3700	3900	4100	4300	45
48	1400			1900	2100			2600	2800			3300	3500				1700	1900	2100	2300	2500	2700	2900	3100	3200	3400				4200	48
51			1700			2200	2400			2900	3100	3300	3500	3600	3800	1500							2800	3000		3400	3600	3800	4000		51
54		1500			2000			2500	2700			3200	3400					1800		2200	2400	2600			3100	3300	3500			4100	54
57	1300			1800			2300			2800	3000			3500	3700		1600		2000				2700	2900				3700	3900		57
60			1600			2100			2600			3200	3300			1400				2100	2300	2500			3100	3200	3400	3600	3800	4000	60
63		1400	1550	1750	1900	2050	2250	2400	2550	2750	2900	3100	3250	3450	3600		1550	1700	1900	2050	2250	2450		2800	3000		3350	3550	3750	3900	63
66				1700	1850		2200	2350		2700	2850	3050	3200	3400	3550		1500		1850			2400	2600	2750	2950	3150		3500	3700		66
69			1500			2000	2150		2500			3000	3150	3350	3500			1650		2000	2200		2550		2900	3100		3450	3650	3850	69
72				1650	1800			2300		2650	2800	2950		3500	3450				1800		2150	2350	2500	2700		3050	3250	3400	3600	3800	72
75			1450			1950	2100	2250	2450	2600	2750		3150	3250			1450	1600		1950		2300		2650	2850	3000	3200		3550	3750	75
78				1600	1750	1900	2050		2400	2550		2900	3050		3400	1350			1750	1900	2100		2450		2800		3150	3350		3700	78
81								2200	2550		2700	2850	3000	3200	3350			1550				2250	2400	2600	2750	2950		3300	3500	3650	81
84		1350		1550	1700	1850	2000	2150		2500	2650			3150	3300				1700	1850	2050			2550		2900	3100	3250	3450		84
87	1250								2300	2450		2800	2950	3100								2200	2350		2700		3050		3400	3600	87
90				1500	1650	1800	1950	2100			2600	2750	2900		3250				1650		2000	2150		2500		2850		3200		3550	90
93									2250	2400	2550			3050	3200					1800			2300		2650	2800	3000	3150	3350	3500	93
96					1600	1750	1900	2050	2200			2700	2850	3000							1950	2100	2250	2450	2600	2750	2950	3100	3300	3450	96
102			1400					2000	2200	2350	2500	2650	2800	2950	3100			1500	1600	1750	1900	2050	2200	2400	2550	2700	2900	3050	3250	3400	102
108						1700	1850		2150	2300	2450	2600	2750	2900	3050	1300	1400			1700	1850	2000	2150	2350	2500	2650	2850	3000	3150	3350	108

Projection Condition - Design Density = 130 p.c.f.
Unrestricted Trench Width

Projection Condition - Design Density = 140 p.c.f.
Unrestricted Trench Width

DATA:

Load factor = Variable
Live Load - 1H 20 - S16 truck

NOTE:

For General Notes see Sheet 1.

DRAWN BY	REVISIONS		
H. C. M.	MARK	DATE	DESCRIPTION
CHECKED BY G. S.			
DESIGNED BY J. J. S.			
SUBMITTED BY C. W. H.			

LOS ANGELES COUNTY
FLOOD CONTROL DISTRICT

"D" LOAD TABLE FOR
DESIGN OF REINFORCED
CONCRETE PIPE

RECOMMENDED BY: B. Smilie, DIVISION ENGINEER (DESIGN)
APPROVAL RECOMMENDED BY: C. Magnuson, ASS'T CHIEF DEPUTY ENGINEER
APPROVED BY: A. E. Bennington, CHIEF ENGINEER 12/22/70

SCALE	DATE	DWG. NO. 2-D213.9
NONE	DEC '70	SHEET 9 OF 27

STATE HIGHWAY

REQUIRED "D" LOAD FOR REINFORCED CONCRETE PIPE LAID PER STD. DWG. 2-D 177

CASE III BEDDING

PIPE SIZE	DEPTH OF COVER IN FEET																															PIPE SIZE
	11	12	13	14	15	16	17	18	19	20	21	22	23	24	25	11	12	13	14	15	16	17	18	19	20	21	22	23	24	25	
12	3750	4000	4000	4250	4500	4750	4750	5000	5250	5250	5500	5500	5750	5750	6000	4000	4250	4500	4750	5000	5000	5250	5500	5750	5750	6000	6000	6250	6500	6500	12
15	3250	3250	3500	3750	4000	4000	4250	4250	4500	4500	4750	4750	5000	5000	5250	3500	3750	3750	4000	4250	4500	4500	4750	5000	5000	5250	5250	5500	5500	5750	15
18	2750	3000	3250	3250	3500	3500	3750	4000	4000	4250	4250	4250	4500	4500	4750	3000	3250	3500	3500	3750	4000	4000	4250	4250	4500	4500	4750	4750	5000	5000	18
21	2500	2750	2750	3000	3250	3250	3500	3500	3750	3750	4000	4000	4000	4250	4250	2750	3000	3000	3250	3500	3500	3750	3750	4000	4000	4250	4250	4500	4500	4750	21
24	2250	2500		2750	3000	3000	3250	3250	3500	3500	3750	3750	3750	4000	4000	2500	2750		3000	3250	3250	3500	3500	3750	3750	4000	4000	4250	4250	4250	24
27		2250	2500		2750		3000	3000	3250	3250	3500	3500	3500	3750	3750		2500	2750	2750	3000		3250		3500	3500	3750	3750	4000	4000	4000	27
30	2000		2250	2500	2500	2750	2750		3000		3250	3250		3500	3500	2250		2500		2750	3000	3000	3250	3250		3500		3750	3750		30
33						2500		2750		3000			3250				2250		2500		2750		3000		3250		3500	3500		3750	33
36		2000		2250					2750		3000	3000		3250	3250	2000		2250		2500		2750		3000		3250			3500		36
39	1800	1900	2000	2100	2300	2400	2500	2600	2700	2800	2900	2900	3000	3100	3200	1900	2100	2200	2300		2600	2700	2800	2900	3000	3100	3200	3300	3400	3500	39
42	1700				2200	2300	2400	2500	2600	2700	2800		2900	3000	3100		2000	2100		2400	2500	2600	2700	2800	2900	3000	3100	3200	3300	3400	42
45		1800	1900	2000	2100	2200	2300	2400	2500	2600	2700	2800			3000	1800			2200	2300	2400						3000	3100	3200	3300	45
48	1600											2700	2800	2900			1900	2000				2500	2600	2700	2800	2900				3200	48
51		1700	1800	1900	2000	2100	2200	2300	2400	2500	2600			2800	2900	1700			2100	2200	2300	2400	2500	2600	2700	2800	2900	3000	3100		51
54												2600	2700				1800	1900												3100	54
57	1500	1600							2300	2400	2500				2800				2000	2100	2200					2700	2800	2900	3000		57
60			1700	1800	1900	2000	2100	2200					2600	2700		1600						2300	2400	2500	2600					3000	60
63	1450	1550					2050	2150	2250	2350	2450	2500		2650	2750		1700	1850	1950	2050	2150	2250	2350	2450	2550	2650	2750	2800	2900		63
66			1650	1750	1850	1950				2300	2400		2550		2700	1550		1800	1900	2000					2500	2600	2700	2800	2850	2850	66
69	1400						2000	2100	2200		2350	2450		2600			1650				2100	2200	2300	2400			2650	2750			69
72		1500	1600	1700	1800	1900				2250			2500		2650	1500		1750	1850	1950				2350	2450	2550			2800	2900	72
75								2050	2150		2300	2400		2550			1600				2050	2150	2250			2550	2600	2700			75
78	1350	1450	1550	1650	1750	1850	1950			2200			2450		2600			1700	1800						2400	2500			2750	2850	78
81									2100			2350		2500		1450				1900	2000	2100	2200	2300	2400	2500		2850			81
84							1900	2000			2250						1550									2450	2550			2800	84
87					1700	1800				2150			2400		2550			1650	1750					2250	2350				2700		87
90	1300	1400	1500	1600					2050			2300								1850	1950	2050	2150	2250				2600			90
93								1950			2200			2450		1400										2400	2500			2750	93
96							1850						2350		2500		1500								2300				2650		96
102			1450	1550	1650	1750			2000	2100		2250						1600	1700	1800	1900	2000	2100	2200			2450	2550			102
108	1250	1350						1900			2150			2400		1350									2250	2350			2600	2700	108

Trench Condition - Design Density = 110 p.c.f.
Trench Width = O.D. + 48"

Trench Condition - Design Density = 120 p.c.f.
Trench Width = O.D. + 48"

DATA Load factor = 1.8
Live load - 1 H20-S16 truck

NOTE
For General Notes see Sheet 1

DRAWN BY	REVISIONS		
JCH	MARK	DATE	DESCRIPTION
CHECKED BY FWR			
DESIGNED BY GS			
SUBMITTED BY CWH			

LOS ANGELES COUNTY
FLOOD CONTROL DISTRICT

"D" LOAD TABLE FOR
DESIGN OF REINFORCED
CONCRETE PIPE

RECOMMENDED BY H. Smithe DIVISION ENGINEER - DESIGN

APPROVAL RECOMMENDED BY C. Magnuson ASS'T CHIEF DEPUTY ENGINEER

APPROVED BY A. E. Bunington 12/22/70 CHIEF ENGINEER

SCALE	DATE	DWG. NO. 2-D213.10
NONE	DEC. '70	SHEET 10 OF 27

STATE HIGHWAY

REQUIRED "D" LOAD FOR REINFORCED CONCRETE PIPE LAID PER STD. DWG. 2-D 177

CASE III BEDDING

PIPE SIZE	DEPTH OF COVER IN FEET 11	12	13	14	15	16	17	18	19	20	21	22	23	24	25	11	12	13	14	15	16	17	18	19	20	21	22	23	24	25	PIPE SIZE
12	4250	4500	4750	5000	5250	5500	5750	6000	6000	6250	6500	6500	6750	7000	7000	4750	5000	5250	5500	5750	6000	6250	6500	6500	6750	7000	7000	7250	7500	7500	12
15	3750	4000	4250	4250	4500	4750	5000	5000	5250	5500	5500	5750	5750	6000	6000	4000	4250	4500	4750	5000	5000	5250	5500	5750	5750	6000	6250	6250	6500	6500	15
18	3250	3500	3750	4000	4000	4250	4500	4500	4750	4750	5000	5000	5250	5250	5500	3500	3750	4000	4250	4250	4500	4750	5000	5000	5250	5250	5500	5750	5750	6000	18
21	3000	3250	3250	3500	3750	3750	4000	4250	4250	4500	4500	4750	4750	5000	5000	3250	3500	3500	3750	4000	4250	4250	4500	4750	4750	5000	5000	5250	5250	5500	21
24	2750	3000	3000	3250	3500	3500	3750	4000	4000	4250	4250	4500	4500	4500	4750	3000	3250	3250	3500	3750	3750	4000	4250	4250	4500	4500	4750	4750	5000	5000	24
27	2500	2750		3000	3250		3500	3750	3750	4000	4000	4250	4250	4250	4500	2750	3000		3250	3500		3750	4000	4000	4250	4250	4500	4500	4750	4750	27
30		2500	2750		3000	3250	3250	3500	3500	3750	3750	4000	4000		4250	2750	2750	3000		3250	3500	3500	3750	3750	4000	4000	4250	4250	4500	4500	30
33	2250			2750		3000		3250	3500	3500		3750	4000	4000	4000	2500		2750	3000		3250		3500		3750	4000	4000		4250		33
36			2500		2750		3000		3250		3500		3750	3750			2500			3000		3250		3500		3750		4000		4250	36
39	2100	2200	2400	2500	2700	2800	2900	3000	3200	3300	3400	3500	3600	3700	3800	2300	2400	2600	2700	2900	3000	3100	3300	3400	3500	3600	3700	3800	3900	4000	39
42	2000		2300		2600	2700	2800	2900	3100	3200	3300	3400	3500	3600	3700	2200	2300	2500	2600	2800	2900	3000	3200	3300	3400	3500	3600	3700	3800	3900	42
45		2100	2300	2400	2500	2600			3000	3100	3200	3300	3400	3500	3600	2100		2400		2700	2800		3100	3200	3300	3400	3500				45
48	1900		2200	2300			2700	2800	2900	3000	3100	3200	3300	3400	3500		2200		2500	2600		2900	3000	3100				3600	3700	3800	48
51		2000			2400	2500	2600						3300	3400	3400	2000		2300			2700	2800				3200	3300	3400	3500	3600	3700	51
54	1800		2100	2200				2700	2800	2900	3000	3100	3200	3300			2100		2400	2500				2900	3000	3100	3200	3300			3600	54
57		1900			2300	2400	2500								3300	1900		2200			2600	2700							3400	3500		57
60			2000					2600	2700	2800	2900	3000	3100	3200			2000		2300	2400			2800	2900	3000	3100					3500	60
63	1700	1850		2000	2200	2350	2450	2550	2650	2750	2850	2950	3050	3150	3250	1850		2150	2250		2500	2650	2750	2850	2950		3200	3300	3400		63
66		1800	1950	2050		2300	2400	2500			2850	2950	3000	3100	3200	1800	1950	2100		2350		2600	2700	2850	2950	3050	3150	3250	3350	3450	66
69	1650		1900		2150	2250			2600	2700	2800	2900			3150			2050	2200	2300	2450	2550		2800	2900	3000	3100	3200			69
72				2000			2350	2450	2550	2650	2750	2850	2950	3050			1900		2150		2400		2650	2750	2850				3300	3400	72
75		1750			2100	2200			2550	2650	2750			3000	3100	1750		2000		2250		2500	2600	2750		2950	3050	3150	3250	3350	75
78	1600		1850	1950			2300	2400	2500	2600	2700	2800	2900				1850		2100		2350			2700	2800						78
81		1700			2050		2300	2400	2500						3050	1700					2350	2450				2900	3000	3100	3200	3300	81
84			1800			2150	2250	2350				2750	2850	2950				1950		2200			2550	2650	2750							84
87	1550			1900					2450	2550	2650						1800		2050		2300	2400				2850	2950	3050	3150	3250	87
90		1650			2000	2150	2250							2900	3000	1650		1900	2050	2150			2500								90
93						2100	2200	2300			2600	2700	2800								2250			2600	2700	2800				3200	93
96			1750						2400	2500							1750		2000			2350					2900	3000	3100		96
102	1500	1600		1850	1950	2050							2750	2850	2950	1600		1850		2100			2450	2550	2650						102
108			1700				2150	2250	2350	2450	2550	2650					1700		1950		2200	2300				2750	2850	2950	3050	3150	108

Trench Condition - Design Density = 130 p.c.f.
Trench Width = O.D. + 48"

Trench Condition - Design Density = 140 p.c.f.
Trench Width = O.D. + 48"

DATA:

Load factor = 1.8

Live load - H20-S16 truck

NOTES:

For general notes see sheet 1

DRAWN BY	REVISIONS		
J.C.D.	MARK	DATE	DESCRIPTION
CHECKED BY YLC. & F.R.			
DESIGNED BY J.C.C.			
SUBMITTED BY C.W.H.			

LOS ANGELES COUNTY
FLOOD CONTROL DISTRICT

"D" LOAD TABLE FOR
DESIGN OF REINFORCED
CONCRETE PIPE

RECOMMENDED BY: DIVISION ENGINEER (MAINT.)

APPROVAL RECOMMENDED BY: ASS'T CHIEF DEPUTY ENGINEER

APPROVED BY: CHIEF ENGINEER 12/22/70

SCALE	DATE	DWG. NO. 2-D213.11
NONE	DEC. '70	SHEET 11 OF 27

RAILROAD

REQUIRED "D" LOAD FOR REINFORCED CONCRETE PIPE DESIGN DENSITY = 110 p.c.f.

PIPE SIZE	DEPTH OF COVER IN FEET																					PIPE SIZE
	4	5	6	7	8	9	10	11	12	13	14	15	16	17	18	19	20	21	22	23	24	25	
12	2250	2000	2000	1750	1750	1750	1500	1500	1500	1500	1500	1500	1500	1500	1250	1250	1250	1250	1250	1250	1250	1250	12
15						1500									1500	1500							15
18	2000		1750														1500	1500					18
21																			1500	1500	1500	1500	21
24		1750																					24
27																							27
30																							30
33																							33
36																							36
39	1800	1700	1700	1600	1500											1600	1600	1600	1600	1600	1600	1600	39
42			1600										1600	1600	1600								42
45												1600									1700	1700	45
48											1600								1700	1700			48
51																	1700	1700					51
54										1600						1700						1800	54
57															1700						1800		57
60									1600					1700					1800	1800			60
63	1750	1650		1550					1550	1550				1650	1650			1750	1750	1750			63
66													1650		1700					1800		1850	66
69																	1750		1800		1850		69
72																1750		1800					72
75												1650		1700						1850		1900	75
78	1700							1550		1600							1800		1850		1900		78
81															1750								81
84													1700					1850		1900		1950	84
87																1800					1950		87
90											1650								1900				90
93														1750			1850			1950		2000	93
96																							96
102									1600			1700			1800			1900	1950		2000	2050	102
108																1850				2000			108

JACKED RCP TRENCH WIDTH = O.D.

DATA:

Load factor = 1.8

Live load – Railroad Coopers E 75

NOTE :

For General Notes see Sheet 1.

DRAWN BY	REVISIONS		
J.C.D.	MARK	DATE	DESCRIPTION
CHECKED BY J.C.C.			
DESIGNED BY A.Y.L.			
SUBMITTED BY C.W.H.			

LOS ANGELES COUNTY
FLOOD CONTROL DISTRICT

"D" LOAD TABLE FOR
DESIGN OF REINFORCED
CONCRETE PIPE

RECOMMENDED BY — DIVISION ENGINEER (MWRD)

APPROVAL RECOMMENDED BY — ASS'T CHIEF DEPUTY ENGINEER

APPROVED BY — CHIEF ENGINEER 12/22/71

SCALE	DATE	DWG. NO. 2-D213.12
NONE	DEC. '70	SHEET 12 OF 27

RAILROAD

REQUIRED "D" LOAD FOR REINFORCED CONCRETE PIPE DESIGN DENSITY = 120 p.c.f.

PIPE SIZE	DEPTH OF COVER IN FEET																						PIPE SIZE
	4	5	6	7	8	9	10	11	12	13	14	15	16	17	18	19	20	21	22	23	24	25	
12	2250	2000	2000	2000	1750	1750	1750	1500	1500	1500	1500	1500	1500	1500	1500	1500	1500	1250	1250	1250	1250	1250	12
15				1750			1500											1500	1500	1500			15
18	2000																				1500	1500	18
21			1750																				21
24																							24
27																							27
30		1750											1750	1750	1750	1750	1750	1750	1750	1750	1750	1750	30
33									1750	1750	1750	1750											33
36								1750															36
39	1800	1800	1700	1600	1600	1600	1600	1600	1600	1600	1600	1600	1600	1600	1600	1600	1700	1700	1700	1700	1700	1700	39
42														1700	1700	1700							42
45													1700							1800	1800	1800	45
48		1700										1700						1800	1800				48
51											1700						1800						51
54																1800					1900	1900	54
57															1800					1900			57
60										1700				1800					1900				60
63	1750		1650			1550	1550			1650	1650			1750	1750			1850	1850			1950	63
66													1750		1800		1850		1900		1950		66
69											1700							1900		1950		2000	69
72														1800		1850					2000		72
75									1650			1750					1900		1950				75
78															1850			2000		2000		2050	78
81																1900					2050		81
84										1700			1800						2000			2100	84
87							1600							1850			1950			2050			87
90																				2050	2100	2100	90
93											1750								2050			2150	93
96																1950							96
102						1600						1800					2000			2100	2150		102
108		1650						1650					1850					2050	2100			2200	108

JACKED R.C.P. TRENCH WIDTH = O.D.

DATA:

Load factor = 1.8

Live load – Railroad Coopers E75

NOTE:

For General Notes see Sheet 1.

DRAWN BY	REVISIONS		
J.C.D.	MARK	DATE	DESCRIPTION
CHECKED BY G.S.			
DESIGNED BY F.R.			
SUBMITTED BY CWH			

LOS ANGELES COUNTY
FLOOD CONTROL DISTRICT

"D" LOAD TABLE FOR DESIGN OF REINFORCED CONCRETE PIPE

RECOMMENDED BY: DiMilne, DIVISION ENGINEER (DESIGN)

APPROVAL RECOMMENDED BY: C. Hagman, ASS'T CHIEF DEPUTY ENGINEER

APPROVED BY: R. E. Bennington, CHIEF ENGINEER 12/22/70

SCALE	DATE	DWG. NO. 2-D213.13
NONE	DEC '70	SHEET 13 OF 27

RAILROAD

REQUIRED "D" LOAD FOR REINFORCED CONCRETE PIPE DESIGN DENSITY = 130 p.c.f.

PIPE SIZE	DEPTH OF COVER IN FEET																						PIPE SIZE
	4	5	6	7	8	9	10	11	12	13	14	15	16	17	18	19	20	21	22	23	24	25	
12	2250	2250	2000	2000	1750	1750	1750	1750	1500	1500	1500	1500	1500	1500	1500	1500	1500	1500	1500	1500	1500	1250	12
15		2000		1750																		1500	15
18	2000								1750														18
21										1750	1750												21
24			1750									1750	1750	1750	1750	1750	1750						24
27																		1750	1750	1750	1750	1750	27
30																							30
33																							33
36																							36
39	1900	1800	1700	1700	1700	1600	1600	1600	1600	1700	1700	1700	1700	1700	1700	1700	1800	1800	1800	1800	1800	1800	39
42									1700						1800	1800							42
45														1800						1900	1900	1900	45
48								1700					1800					1900	1900				48
51	1800											1800					1900					2000	51
54																1900				2000	2000		54
57											1800				1900				2000				57
60														1900				2000				2100	60
63		1750		1650	1650		1650	1650			1750			1850	1850		1950	1950			2050	2050	63
66										1750			1850		1900			2000		2050		2100	66
69						1650										1950			2050		2100		69
72											1800			1900			2000			2100		2150	72
75															1950			2050			2150		75
78								1700				1850				2000			2100			2200	78
81		1700											1900				2050			2150			81
84																		2100			2200		84
87									1750					1950					2150			2250	87
90															2000	2050	2050	2100	2150	2200	2200	2250	90
93										1800							2100				2250		93
96	1750										1850							2150				2300	96
102												1900	1950						2200	2250	2300		102
108														2000	2050	2100	2150					2350	108

JACKED R.C.P. TRENCH WIDTH = O.D.

DATA:

Load factor = 1.8

Live load – Railroad Coopers E75

NOTE:

For General Notes see Sheet 1.

DRAWN BY	REVISIONS		
J.C.D.	MARK	DATE	DESCRIPTION
CHECKED BY J.C.			
ENGINEERED BY J.C.C.			
SUBMITTED BY C.W.H.			

LOS ANGELES COUNTY
FLOOD CONTROL DISTRICT

"D" LOAD TABLE FOR DESIGN OF REINFORCED CONCRETE PIPE

RECOMMENDED BY D. Smith (DIVISION ENGINEER)

APPROVAL RECOMMENDED BY C. Magness (ASS'T CHIEF DEPUTY ENGINEER)

APPROVED BY A. E. Bringham 12/22/70 CHIEF ENGINEER

SCALE	DATE	DWG. NO. 2-D213.14
NONE	DEC '70	SHEET 14 OF 27

RAILROAD

REQUIRED "D" LOAD FOR REINFORCED CONCRETE PIPE DESIGN DENSITY = 140 p.c.f.

PIPE SIZE	DEPTH OF COVER IN FEET																						PIPE SIZE
	4	5	6	7	8	9	10	11	12	13	14	15	16	17	18	19	20	21	22	23	24	25	
12	2250	2250	2000	2000	1750	1750	1750	1750	1750	1750	1500	1500	1500	1500	1500	1500	1500	1500	1500	1500	1500	1500	12
15		2000									1750												15
18												1750	1750	1750									18
21	2000			1750											1750	1750	1750	1750	1750	1750			21
24																					1750	1750	24
27																							27
30																							30
33																							33
36			1750														2000	2000	2000	2000	2000	2000	36
39	1900	1800	1800	1700	1700	1700	1700	1700	1700	1700	1800	1800	1800	1800	1800	1800	1800	1900	1900	1900	1900	1900	39
42										1800						1900	1900						42
45														1900	1900					2000	2000	2000	45
48									1800				1900					2000	2000				48
51																	2000				2100	2100	51
54												1900				2000				2100			54
57															2000				2100				57
60											1900			2000				2100			2200	2200	60
63	1850		1750					1750	1750		1850	1850		1950			2050	2050		2150	2150		63
66		1750										1900				2050		2100	2150		2200		66
69									1800				1950				2100			2200		2250	69
72	1800									1850				2000				2150			2250		72
75															2050	2100			2200			2300	75
78											1900	1950					2150				2300		78
81													2000					2200			2300	2350	81
84														2050	2100					2300			84
87																2150	2200				2350	2400	87
90														2050	2100	2150	2200	2250	2300				90
93			1700																	2350	2400		93
96							1750															2450	96
102								1800	1850	1900	1950	2000	2050	2100	2150	2200	2250	2300	2350	2400			102
108																					2450	2500	108

JACKED R.C.P. TRENCH WIDTH = O.D.

DATA:

Load factor = 1.8

Live load — Railroad Coopers E75

NOTE:

For General Notes see Sheet 1.

DRAWN BY	REVISIONS		
J.C.D.	MARK	DATE	DESCRIPTION
CHECKED BY V.C.M.			
DESIGNED BY G.S.			
SUBMITTED BY C.W.H.			

LOS ANGELES COUNTY
FLOOD CONTROL DISTRICT

"D" LOAD TABLE FOR DESIGN OF REINFORCED CONCRETE PIPE

RECOMMENDED BY: DIVISION ENGINEER (DESIGN)

APPROVAL RECOMMENDED BY: ASST CHIEF DEPUTY ENGINEER

APPROVED BY: CHIEF ENGINEER 12/22/70

SCALE	DATE	DWG. NO. 2-D213.15
NONE	DEC '70	SHEET 15 OF 27

RAILROAD

REQUIRED "D" LOAD FOR REINFORCED CONCRETE PIPE DESIGN DENSITY = 110 p.c.f.

PIPE SIZE	DEPTH OF COVER IN FEET																					PIPE SIZE
	4	5	6	7	8	9	10	11	12	13	14	15	16	17	18	19	20	21	22	23	24	25	
12	2250	2000	2000	1750	1750	1500	1500	1500	1500	1500	1500	1500	1500	1250	1250	1250	1250	1250	1250	1250	1250	1250	12
15	2000		1750											1500									15
18															1500	1500	1500						18
21		1750			1500													1500	1500	1500	1500		21
24																						1500	24
27																							27
30																							30
33	1750																						33
36																							36
39	1800	1700	1600	1600														1600	1600	1600	1600	1600	39
42															1600	1600	1600						42
45	1700													1600									45
48				1500									1600							1700	1700	1700	48
51												1600						1700	1700				51
54		1600									1600						1700						54
57																1700						1800	57
60															1700					1800	1800		60
63			1550			1450	1450			1550	1550				1650	1650			1750	1750	1750		63
66														1650		1700		1750			1800		66
69																				1800		1850	69
72	1650												1650		1700		1750		1800		1850		72
75											1600												75
78									1550							1750		1800		1850		1900	78
81														1700					1850		1900		81
84							1500					1650					1800					1950	84
87															1750					1900			87
90						1500												1850			1950		90
93										1600			1700			1800			1900				93
96																						2000	96
102														1750			1850			1950	2000		102
108																		1900				2050	108

JACKED R.C.P. TRENCH WIDTH = O.D.

DATA:

Load factor = 1.8

Live load – Railroad Coopers E72

NOTE:

For General Notes see Sheet 1.

DRAWN BY	REVISIONS		
GDM	MARK	DATE	DESCRIPTION
CHECKED BY VCM			
DESIGNED BY FR			
SUBMITTED BY CWM			

LOS ANGELES COUNTY
FLOOD CONTROL DISTRICT

"D" LOAD TABLE FOR DESIGN OF REINFORCED CONCRETE PIPE

RECOMMENDED BY: DIVISION ENGINEER (DESIGN)

APPROVAL RECOMMENDED BY: ASS'T CHIEF DEPUTY ENGINEER

APPROVED BY: CHIEF ENGINEER 12'22'70

SCALE	DATE	DWG. NO. 2-D213.16
NONE	DEC '70	SHEET 16 OF 27

RAILROAD

REQUIRED "D" LOAD FOR REINFORCED CONCRETE PIPE DESIGN DENSITY = 120 p.c.f.

PIPE SIZE	DEPTH OF COVER IN FEET																					PIPE SIZE
	4	5	6	7	8	9	10	11	12	13	14	15	16	17	18	19	20	21	22	23	24	25	
12	2250	2000	2000	1750	1750	1750	1500	1500	1500	1500	1500	1500	1500	1500	1500	1500	1250	1250	1250	1250	1250	1250	12
15	2000		1750			1500											1500	1500					15
18																			1500	1500	1500	1500	18
21																							21
24		1750																					24
27																							27
30																							30
33													1750	1750	1750	1750	1750	1750	1750	1750	1750	1750	33
36											1750	1750											36
39	1800	1700	1700	1600	1600					1600	1600	1600	1600	1600	1600	1600	1600	1600	1700	1700	1700	1700	39
42			1600						1600							1700	1700	1700					42
45														1700	1700							1800	45
48								1600					1700						1800	1800	1800		48
51																		1800					51
54												1700					1800					1900	54
57	1700															1800					1900		57
60						1600	1600				1700				1800				1900	1900			60
63		1650		1550	1550	1550	1550	1550			1650	1650			1750				1850	1850			63
66												1700		1750				1850		1900		1950	66
69															1800		1850		1900		1950		69
72										1650			1750					1900		1950		2000	72
75																1850					2000		75
78											1700			1800			1900		1950			2050	78
81								1600												2000			81
84															1850			1950			2050		84
87												1750				1900			2000			2100	87
90													1800				1950			2050	2050	2100	90
93									1650												2100		93
96														1850				2000				2150	96
102										1700					1900				2050	2100			102
108																1950	2000				2150	2200	108

JACKED R.C.P. TRENCH WIDTH = O.D.

DATA:

Load factor = 1.8

Live load – Railroad Coopers E72

NOTE:

For General Notes see Sheet 1.

DRAWN BY	REVISIONS		
J.C.D.	MARK	DATE	DESCRIPTION
CHECKED BY J.J.S.			
DESIGNED BY F.R.			
SUBMITTED BY C.W.H.			

LOS ANGELES COUNTY
FLOOD CONTROL DISTRICT

"D" LOAD TABLE FOR DESIGN OF REINFORCED CONCRETE PIPE

RECOMMENDED BY D. Mulne DIVISION ENGINEER (DESIGN)

APPROVAL RECOMMENDED BY C. Magnusson ASS'T CHIEF DEPUTY ENGINEER

APPROVED BY A. E. Bumington 12-22-70 CHIEF ENGINEER

SCALE	DATE	DWG. NO. 2-D213.17
NONE	DEC '70	SHEET 17 OF 27

RAILROAD

REQUIRED "D" LOAD FOR REINFORCED CONCRETE PIPE DESIGN DENSITY = 130 p.c.f.

PIPE SIZE	DEPTH OF COVER IN FEET																						PIPE SIZE
	4	5	6	7	8	9	10	11	12	13	14	15	16	17	18	19	20	21	22	23	24	25	
12	2250	2000	2000	1750	1750	1750	1750	1500	1500	1500	1500	1500	1500	1500	1500	1500	1500	1500	1500	1250	1250	1250	12
15	2000						1500													1500	1500	1500	15
18			1750																				18
21																							21
24							1750	1750	1750	1750													24
27		1750									1750	1750	1750	1750	1750	1750	1750	1750	1750	1750	1750	1750	27
30																							30
33																							33
36																							36
39	1800	1800	1700	1700	1600	1600	1600	1600	1600	1600	1700	1700	1700	1700	1700	1700	1700	1700	1800	1800	1800	1800	39
42		1700														1800	1800	1800					42
45										1700					1800						1900	1900	45
48				1600										1800					1900	1900			48
51									1700				1800					1900					51
54																	1900				2000	2000	54
57												1800				1900				2000			57
60															1900				2000				60
63	1750		1650					1650	1650		1750	1750			1850			1950	1950			2050	63
66														1850			1950		2000		2050		66
69												1800			1900			2000		2050		2100	69
72									1700				1850			1950			2050		2100		72
75																	2000			2100		2150	75
78										1750				1900				2050			2150		78
81															1950				2100			2200	81
84		1650									1800					2000				2150			84
87												1850					2050				2200		87
90	1700												1900				2050	2100	2150	2150	2200	2250	90
93														1950						2200			93
96							1650								2000	2050					2250		96
102																	2100	2150	2200			2300	102
108								1700												2250	2300	2350	108

JACKED R.C.P. TRENCH WIDTH = O.D.

DATA:

Load factor = 1.8

Live load – Railroad Coopers E72

NOTE:

For General Notes see Sheet 1.

DRAWN BY	REVISIONS		
J.C.D.	MARK	DATE	DESCRIPTION
CHECKED BY J.C.C.			
DESIGNED BY Y.S.			
SUBMITTED BY CWH			

LOS ANGELES COUNTY
FLOOD CONTROL DISTRICT

"D" LOAD TABLE FOR DESIGN OF REINFORCED CONCRETE PIPE

RECOMMENDED BY: DIVISION ENGINEER (Hydro)

APPROVAL RECOMMENDED BY: ASS'T CHIEF/DEPUTY ENGINEER

APPROVED BY: CHIEF ENGINEER 12/22/70

SCALE	DATE	DWG. NO. 2-D213.18
NONE	DEC '70	SHEET 18 OF 27

RAILROAD

REQUIRED "D" LOAD FOR REINFORCED CONCRETE PIPE DESIGN DENSITY = 140 p.c.f.

PIPE SIZE	DEPTH OF COVER IN FEET																					PIPE SIZE
	4	5	6	7	8	9	10	11	12	13	14	15	16	17	18	19	20	21	22	23	24	25	
12	2250	2000	2000	2000	1750	1750	1750	1750	1750	1500	1500	1500	1500	1500	1500	1500	1500	1500	1500	1500	1500	1500	12
15				1750						1750													15
18	2000										1750	1750											18
21													1750	1750	1750	1750	1750	1750					21
24			1750																1750	1750	1750	1750	24
27																							27
30																							30
33																							33
36		1750																	2000	2000	2000	2000	36
39	1900	1800	1700	1700	1700	1700	1700	1700	1700	1700	1700	1700	1800	1800	1800	1800	1800	1800	1900	1900	1900	1900	39
42	1800											1800					1900	1900					42
45											1800				1900	1900					2000	2000	45
48										1800				1900					2000	2000			48
51													1900				2000	2000				2100	51
54																2000				2100	2100		54
57									1800			1900							2100				57
60															2000			2100				2150	60
63		1750		1650	1650	1650	1650		1750			1850			1950						2150		63
66		1700									1850			1950			2050			2150		2200	66
69	1750														2000	2050			2150		2200		69
72							1700					1900	1950				2100			2200		2300	72
75														2000				2150			2250		75
78								1750							2050				2200	2250			78
81									1800							2100	2150				2300	2300	81
84										1850								2200	2250			2350	84
87											1900	1950	2000							2300			87
90														2050	2100	2100	2150	2200	2250		2350	2400	90
93																2150	2200	2250					93
96																			2300	2350	2400		96
102						1700							2000									2450	102
108													2050	2100	2150	2200	2250	2300	2350	2400	2450	2500	108

JACKED R.C.P. TRENCH WIDTH = O.D.

DATA:

Load factor = 1.8

Live load – Railroad Coopers E72

NOTE:

For General Notes see Sheet 1.

DRAWN BY	REVISIONS		
JCH	MARK	DATE	DESCRIPTION
CHECKED BY CYL			
DESIGNED BY GS			
SUBMITTED BY CWH			

LOS ANGELES COUNTY
FLOOD CONTROL DISTRICT

"D" LOAD TABLE FOR DESIGN OF REINFORCED CONCRETE PIPE

RECOMMENDED BY D. J. Milne DIVISION ENGINEER (DESIGN)

APPROVAL RECOMMENDED BY C. Magnuson ASS'T CHIEF DEPUTY ENGINEER

APPROVED BY A. E. Remington 12/22/70 CHIEF ENGINEER

SCALE	DATE	DWG. NO. 2-D213.19
NONE	DEC '70	SHEET 19 OF 27

RAILROAD

REQUIRED "D" LOAD FOR REINFORCED CONCRETE PIPE LAID PER STD. DWG. 2-D177

CASE III BEDDING DESIGN DENSITY = 110 p.c.f.

PIPE SIZE	DEPTH OF COVER IN FEET 2	3	4	5	6	7	8	9	10	11	12	13	14	15	16	17	18	19	20	21	22	23	24	25	PIPE SIZE
12	2750	2750	2750	2750	2750	2750	2750	2750	2750	2750	2750	2750	2750	2750	3000	3000	3000	3000	3000	3000	3000	3000	3000	3000	12
15		2500	2500	2500	2500	2500	2500	2500	2500	2500	2500	2500	2500		2750	2750	2750	2750	2750	2750	2750	2750	2750	2750	15
18	2500			2250	2250	2250	2250	2250	2250	2250				2500	2500	2500	2500	2500	2500						18
21		2250	2250								2250	2250	2250							2500	2500	2500	2500	2500	21
24							2000	2000						2250	2250										24
27	2250				2000	2000			2000	2000						2250	2250								27
30				2000							2000							2250							30
33			2000									2000							2250						33
36													2000							2250					36
39	2200	2000		1900	1900	1900	1900	1800	1900	1900	1900			2100	2100	2100	2200	2200	2200	2300	2300	2300	2400	2400	39
42	2100					1800	1800		1800					2000									2300		42
45			1900		1800							1900					2100			2200					45
48										1800															48
51															2000										51
54				1800																					54
57													1900					2100							57
60		1900					1700	1700			1800														60
63	2050		1850		1750	1700			1750	1750		1850		1950		2050	2050		2150		2250	2250		2350	63
66	2000			1750					1700																66
69			1800													2000									69
72					1700										1950										72
75														1900											75
78													1850												78
81							1650	1650				1800										2300	2300	2350	81
84		1850									1750														84
87						1650				1700															87
90									1650								2050	2100	2150	2200	2250				90
93	1950			1700																			2350		93
96																									96
102			1750																					2400	102
108					1650																				108

TRENCH CONDITION — TRENCH WIDTH = O.D. + 20 INCHES

DATA:

Load factor = 1.8

Live load — Railroad Coopers E-75

NOTES:

1. For General Notes see Sheet 1.

DRAWN BY	REVISIONS		
G.D.M.	MARK	DATE	DESCRIPTION
CHECKED BY G.S.			
DESIGNED BY J.J.S.			
SUBMITTED BY C.W.H.			

LOS ANGELES COUNTY
FLOOD CONTROL DISTRICT

"D" LOAD TABLE FOR DESIGN OF REINFORCED CONCRETE PIPE

RECOMMENDED BY: D. Spulne, DIVISION ENGINEER (DESIGN)

APPROVAL RECOMMENDED BY: C. Magnuson, ASS'T CHIEF DEPUTY ENGINEER

APPROVED BY: A. E. Bennington, 12/22/70, CHIEF ENGINEER

SCALE	DATE	DWG. NO. 2-D213.20
NONE	DEC '70	SHEET 20 OF 27

RAILROAD

REQUIRED "D" LOAD FOR REINFORCED CONCRETE PIPE LAID PER STD. DWG. 2-D177

CASE III BEDDING DESIGN DENSITY = 120 p.c.f.

PIPE SIZE	DEPTH OF COVER IN FEET																								PIPE SIZE
	2	3	4	5	6	7	8	9	10	11	12	13	14	15	16	17	18	19	20	21	22	23	24	25	
12	3000	2750	2750	2750	2750	2750	2750	2750	2750	2750	3000	3000	3000	3000	3000	3000	3250	3250	3250	3250	3250	3250	3250	3250	12
15	2750		2500	2500	2500	2500	2500	2500	2500		2750	2750	2750	2750	2750	2750	3000	3000	3000	3000	3000	3000	3000	3000	15
18	2500	2500								2500	2500	2500	2500				2750	2750	2750	2750	2750	2750			18
21			2250	2250	2250	2250	2250	2250	2250	2250				2500	2500	2500							2750	2750	21
24		2250									2250						2500	2500							24
27												2250	2250						2500	2500					27
30	2250				2000	2000	2000	2000						2250							2500				30
33				2000					2000						2250							2500			33
36			2000							2000						2250							2500		36
39	2200	2100				1900	1900	1900			2100	2100	2100	2200	2200	2300	2300	2400	2400	2400				2600	39
42					1900				1900		2000							2300						2500	42
45	2100	2000		1900												2200					2400				45
48										1900		2000		2100											48
51			1900																						51
54						1800	1800	1800											2300						54
57					1800																				57
60															2100		2200								60
63	2050	1950		1850					1800	1850	1900	1950	2000	2050		2150		2250		2350		2450			63
66			1850	1800																					66
69						1750	1750																		69
72		1900						1750																2550	72
75	2000				1750																			2350	75
78																									78
81									1750										2300	2350	2400	2450	2600		81
84										1800	1850														84
87			1800									1900													87
90				1750									1950	2050	2100	2150	2200	2250							90
93																									93
96						1700	1700							2000											96
102								1700																	102
108		1850			1700										2050										108

TRENCH CONDITION — TRENCH WIDTH = O.D. + 20 INCHES

DATA:

Load factor = 1.8

Live load – Railroad Coopers E-75

NOTES:

1. For General Notes see Sheet 1.

DRAWN BY	REVISIONS		
G.D.M.	MARK	DATE	DESCRIPTION
CHECKED BY Y.L.C.			
DESIGNED BY J.C.C.			
SUBMITTED BY C.W.H.			

LOS ANGELES COUNTY
FLOOD CONTROL DISTRICT

"D" LOAD TABLE FOR
DESIGN OF REINFORCED
CONCRETE PIPE

RECOMMENDED BY: DIVISION ENGINEER (DESIGN)

APPROVAL RECOMMENDED BY: ASST CHIEF DEPUTY ENGINEER

APPROVED BY: CHIEF ENGINEER

SCALE	DATE	DWG. NO. 2-D21321
NONE	DEC. '70	SHEET 21 OF 27

RAILROAD

REQUIRED "D" LOAD FOR REINFORCED CONCRETE PIPE LAID PER STD. DWG. 2-D177

CASE III BEDDING DESIGN DENSITY = 130 p.c.f.

PIPE SIZE	DEPTH OF COVER IN FEET 2	3	4	5	6	7	8	9	10	11	12	13	14	15	16	17	18	19	20	21	22	23	24	25	PIPE SIZE
12	3000	3000	2750	2750	2750	3000	3000	3000	3000	3000	3000	3000	3250	3250	3250	3250	3250	3250	3500	3500	3500	3500	3500	3500	12
15	2750	2750				2750	2750	2750	2750	2750	2750	2750	3000	3000	3000	3000	3000	3000	3250	3250	3250	3250	3250	3250	15
18	2500	2500	2500	2500	2500	2500	2500	2500	2500	2500			2750	2750	2750				3000	3000	3000	3000	3000	3000	18
21											2500	2500				2750	2750	2750	2750						21
24			2250	2250	2250	2250	2250	2250	2250				2500	2500						2750	2750				24
27		2250								2250					2500							2750	2750		27
30	2250										2250					2500	2500							2750	30
33												2250													33
36					2000	2000	2000											2500							36
39	2200	2100	2100	2000				2000	2100	2100	2200	2200	2300	2300	2400	2400			2500	2600	2600	2700	2700	2700	39
42			2000						2000		2100						2400								42
45													2200		2300							2600			45
48						1900				2000															48
51	2100	2000			1900		1900	1900				2100								2500					51
54				1900										2200		2300		2400							54
57																									57
60									1900																60
63	2050		1900		1850	1850	1850			1950	2000		2150		2250		2350		2450		2550		2650		63
66		1950		1850				1850				2050													66
69													2100												69
72														2150											72
75						1800			1850												2500	2600	2650	2700	75
78					1800		1800								2200										78
81			1850							1900						2300	2350	2400	2450	2500					81
84	2000							1800																	84
87		1900		1800							1950					2250									87
90												2050	2100	2150	2200	2250									90
93												2000												2750	93
96																							2700		96
102																									102
108						1750							2000									2650			108

TRENCH CONDITION – TRENCH WIDTH = O.D. + 20 INCHES

DATA:

Load factor = 1.8

Live load – Railroad Coopers E-75

NOTES:

1. For General Notes see Sheet 1.

DRAWN BY	REVISIONS		
G.D.M.	MARK	DATE	DESCRIPTION
CHECKED BY G.S.			
DESIGNED BY J.J.S.			
SUBMITTED BY C.W.H.			

LOS ANGELES COUNTY
FLOOD CONTROL DISTRICT

"D" LOAD TABLE FOR
DESIGN OF REINFORCED
CONCRETE PIPE

RECOMMENDED BY — DIVISION ENGINEER (DESIGN)

APPROVAL RECOMMENDED BY — ASS'T CHIEF DEPUTY ENGINEER

APPROVED BY — CHIEF ENGINEER 12-22-70

SCALE	DATE	DWG. NO. 2-D213 22
NONE	DEC '70	SHEET 22 OF 27

RAILROAD

REQUIRED "D" LOAD FOR REINFORCED CONCRETE PIPE LAID PER STD. DWG. 2-D177

CASE III BEDDING DESIGN DENSITY = 140 p.c.f.

PIPE SIZE	DEPTH OF COVER IN FEET																								PIPE SIZE
	2	3	4	5	6	7	8	9	10	11	12	13	14	15	16	17	18	19	20	21	22	23	24	25	
12	3000	3000	3000	3000	3000	3000	3000	3000	3000	3250	3250	3250	3250	3500	3500	3500	3500	3500	3500	3500	3750	3750	3750	3750	12
15	2750	2750	2750	2750	2750	2750	2750	2750	2750	3000	3000	3000	3000	3250	3250	3250	3250	3250	3250	3250	3500	3500	3500	3500	15
18		2500	2500	2500	2500	2500	2500			2750	2750	2750		3000	3000	3000	3000	3000			3250	3250	3250	3250	18
21	2500							2500	2500	2500			2750	2750					3000	3000	3000				21
24											2500				2750	2750						3000	3000	3000	24
27		2250	2250	2250	2250	2250	2250	2250				2500					2750	2750							27
30									2250				2500						2750						30
33	2250									2250				2500						2750					33
36															2500										36
39	2200	2200	2100	2100	2100	2100	2100	2100	2000	2200	2300	2300	2400			2600	2600	2700	2700	2700	2800	2800	2900	2900	39
42		2100							2100					2400		2500		2600							42
45				2000	2000	2000	2000				2200														45
48			2000										2300										2800		48
51								2000		2100					2400										51
54	2100											2200					2500								54
57									2000										2600		2700				57
60		2000												2300											60
63			1950	1950	1900	1900	1950	1950		2050	2150		2250			2450		2550		2650		2750		2850	63
66				1900											2350								2800	2850	66
69	2050						1900					2150											2850	2900	69
72									1950							2400									72
75			1900					1900										2550	2600	2650	2700	2800			75
78		1950								2000			2200												78
81					1850	1850								2300	2350	2400	2500								81
84																	2450								84
87				1850							2050														87
90							1850				2000	2100	2200	2250											90
93																					2250				93
96																									96
102	2000								1900		2050	2100													102
108			1850					1850																	108

TRENCH CONDITION — TRENCH WIDTH = O.D. + 20 INCHES

DATA:

Load factor = 1.8

Live load — Railroad Coopers E-75

NOTES:

1. For General Notes see Sheet 1.

DRAWN BY	REVISIONS		
G.D.M.	MARK	DATE	DESCRIPTION
CHECKED BY			
J.C.C.			
DESIGNED BY			
Y.L.C.			
SUBMITTED BY			
C.W.H.			

LOS ANGELES COUNTY
FLOOD CONTROL DISTRICT

"D" LOAD TABLE FOR DESIGN OF REINFORCED CONCRETE PIPE

RECOMMENDED BY: H. Smith, DIVISION ENGINEER (DESIGN)

APPROVAL RECOMMENDED BY: C. Thompson, ASS'T CHIEF DEPUTY ENGINEER

APPROVED BY: A. E. Bennington, CHIEF ENGINEER 12/22/70

SCALE	DATE	DWG. NO. 2-D213.23
NONE	DEC. '70	SHEET 23 OF 27

RAILROAD

REQUIRED "D" LOAD FOR REINFORCED CONCRETE PIPE LAID PER STD. DWG. 2-D177

CASE III BEDDING DESIGN DENSITY = 110 p.c.f.

PIPE SIZE	DEPTH OF COVER IN FEET 2	3	4	5	6	7	8	9	10	11	12	13	14	15	16	17	18	19	20	21	22	23	24	25	PIPE SIZE
12	2750	2750	2750	2500	2500	2500	2500	2500	2500	2750	2750	2750	2750	2750	2750	3000	3000	3000	3000	3000	3000	3000	3000	3000	12
15	2500	2500	2500							2500	2500	2500	2500	2500		2750	2750	2750	2750	2750	2750	2750	2750	2750	15
18			2250	2250	2250	2250	2250	2250	2250	2250	2250				2500	2500	2500	2500	2500	2500					18
21		2250										2250	2250	2250							2500	2500	2500	2500	21
24	2250				2000	2000	2000	2000	2000						2250	2250									24
27			2000	2000						2000							2250	2250							27
30											2000	2000							2250						30
33		2000																		2250					33
36													2000								2250				36
39	2100		1900	1900	1800	1800	1800	1800	1800	1900	1900			2000	2100	2100	2200	2200	2200	2300	2300	2300	2300	2400	39
42				1800								1900					2100			2200					42
45	2000	1900								1800					2000										45
48													1900					2100							48
51			1800				1700	1700																	51
54						1700					1800										2200				54
57					1700				1700							2000									57
60																									60
63	1950	1850		1750						1750		1850		1900	1950		2050		2150			2250		2350	63
66			1750				1650	1650				1900	1850												66
69				1700		1650					1750									2150					69
72										1700															72
75					1650				1650																75
78	1900	1800																							78
81																							2300	2350	81
84																									84
87																									87
90							1600										2050	2100	2150	2150	2200	2250			90
93			1700	1650				1600																	93
96						1600																			96
102																				2200					102
108										1650	1700	1750	1800	1850	1900						2250				108

TRENCH CONDITION — TRENCH WIDTH = O.D. + 20 INCHES

DATA:

Load factor = 1.8

Live load — Railroad Coopers E-72

NOTES:

1. For General Notes see Sheet 1.

DRAWN BY	REVISIONS		
J.C.D.	MARK	DATE	DESCRIPTION
CHECKED BY J.J.S.			
DESIGNED BY Y.S.			
SUBMITTED BY C.W.H.			

LOS ANGELES COUNTY
FLOOD CONTROL DISTRICT

"D" LOAD TABLE FOR
DESIGN OF REINFORCED
CONCRETE PIPE

RECOMMENDED BY — DIVISION ENGINEER (MAINT.)

APPROVAL RECOMMENDED BY — ASS'T CHIEF DEPUTY ENGINEER

APPROVED BY — CHIEF ENGINEER — 12 22 71

SCALE	DATE	DWG. NO. 2-D213 24
NONE	DEC '70	SHEET 24 OF 27

RAILROAD

REQUIRED "D" LOAD FOR REINFORCED CONCRETE PIPE LAID PER STD. DWG. 2-D177

CASE III BEDDING DESIGN DENSITY = 120 p.c.f.

PIPE SIZE	DEPTH OF COVER IN FEET 2	3	4	5	6	7	8	9	10	11	12	13	14	15	16	17	18	19	20	21	22	23	24	25	PIPE SIZE
12	2750	2750	2750	2750	2750	2750	2750	2750	2750	2750	2750	3000	3000	3000	3000	3000	3000	3250	3250	3250	3250	3250	3250	3250	12
15	2500	2500	2500	2500	2500	2500	2500	2500	2500	2500		2750	2750	2750	2750	2750	2750	3000	3000	3000	3000	3000	3000	3000	15
18				2250	2250	2250	2250	2250			2500	2500	2500	2500				2750	2750	2750	2750	2750	2750		18
21		2250	2250						2250	2250					2500	2500	2500							2750	21
24	2250										2250	2250						2500	2500						24
27					2000	2000	2000						2250							2500	2500				27
30				2000				2000	2000					2250	2250							2500			30
33			2000							2000													2500		33
36		2000														2250									36
39	2100			1900	1900	1900	1900	1900	1900		2000	2100	2100	2200	2200	2300	2300	2300	2400	2400	2400			2500	39
42			1900											2100		2200									42
45										1900		2000							2300						45
48					1800	1800	1800	1800																	48
51	2000																2200								51
54		1900		1800					1800		1900		2000		2100							2400			54
57																									57
60																									60
63			1800		1750	1750	1750	1750		1850		1950		2050		2150		2250		2350			2450		63
66	1950			1750																					66
69		1850							1750	1800															69
72											1850	1900													72
75						1700	1700						1950	2000											75
78					1700										2050							2450			78
81								1700								2100			2300	2350	2400	2450	2450	2500	81
84																	2150						2500		84
87			1750																					2550	87
90															2050	2100	2150	2250							90
93	1900			1700														2200							93
96		1800																							96
102									1700	1750															102
108						1650	1650				1800														108

TRENCH CONDITION — TRENCH WIDTH = O.D. + 20 INCHES

DATA:

Load factor = 1.8

Live load – Railroad Coopers E-72

NOTES:

1. For General Notes see Sheet 1.

DRAWN BY	REVISIONS		
G.D.M.	MARK	DATE	DESCRIPTION
CHECKED BY J.S.S.			
DESIGNED BY F.R.			
SUBMITTED BY C.W.H.			

LOS ANGELES COUNTY
FLOOD CONTROL DISTRICT

"D" LOAD TABLE FOR
DESIGN OF REINFORCED
CONCRETE PIPE

RECOMMENDED BY: DIVISION ENGINEER (DESIGN)

APPROVAL RECOMMENDED BY: ASS'T CHIEF-DEPUTY ENGINEER

APPROVED BY: A. E. Pennington 12-22-70 CHIEF ENGINEER

SCALE	DATE	DWG. NO. 2-D213 25
NONE	DEC '70	SHEET 25 OF 27

RAILROAD

REQUIRED "D" LOAD FOR REINFORCED CONCRETE PIPE LAID PER STD. DWG. 2-D177

CASE III BEDDING DESIGN DENSITY = 120 p.c.f.

PIPE SIZE	DEPTH OF COVER IN FEET																								PIPE SIZE
	2	3	4	5	6	7	8	9	10	11	12	13	14	15	16	17	18	19	20	21	22	23	24	25	
12	2750	2750	2750	2750	2750	2750	2750	2750	2750	2750	2750	3000	3000	3000	3000	3000	3000	3250	3250	3250	3250	3250	3250	3250	12
15	2500	2500	2500	2500	2500	2500	2500	2500	2500	2500		2750	2750	2750	2750	2750	2750	3000	3000	3000	3000	3000	3000	3000	15
18				2250	2250	2250	2250	2250			2500	2500	2500	2500				2750	2750	2750	2750	2750	2750		18
21		2250	2250						2250	2250					2500	2500	2500							2750	21
24	2250										2250	2250						2500	2500						24
27					2000	2000	2000						2250							2500	2500				27
30				2000				2000	2000					2250	2250							2500			30
33			2000							2000													2500		33
36		2000														2250									36
39	2100			1900	1900	1900	1900	1900	1900		2000	2100	2100	2200	2200	2300	2300	2300	2400	2400	2400			2500	39
42			1900											2100		2200									42
45										1900		2000							2300						45
48					1800	1800	1800	1800																	48
51	2000																2200								51
54		1900		1800					1800		1900		2000		2100							2400			54
57																									57
60																									60
63			1800		1750	1750	1750	1750		1850		1950		2050		2150		2250		2350			2450		63
66	1950			1750																					66
69		1850							1750	1800															69
72											1850	1900													72
75						1700	1700						1950	2000											75
78					1700										2050							2450			78
81								1700								2100			2300	2350	2400	2450	2450	2500	81
84																	2150						2500		84
87			1750																					2550	87
90															2050	2100	2150	2250							90
93	1900			1700														2200							93
96		1800																							96
102									1700	1750															102
108						1650	1650				1800														108

TRENCH CONDITION – TRENCH WIDTH = O.D. + 20 INCHES

DATA:

Load factor = 1.8

Live load – Railroad Coopers E-72

NOTES:

1. For General Notes see Sheet 1.

DRAWN BY	REVISIONS		
G.D.M.	MARK	DATE	DESCRIPTION
CHECKED BY J.S.S.			
DESIGNED BY F.R.			
SUBMITTED BY C.W.H.			

LOS ANGELES COUNTY
FLOOD CONTROL DISTRICT

"D" LOAD TABLE FOR
DESIGN OF REINFORCED
CONCRETE PIPE

RECOMMENDED BY: DIVISION ENGINEER (DESIGN)

APPROVAL RECOMMENDED BY: ASS'T CHIEF DEPUTY ENGINEER

APPROVED BY: A. C. Thurington 12-22-70 CHIEF ENGINEER

SCALE	DATE	DWG. NO. 2-D213 25
NONE	DEC '70	SHEET 25 OF 27

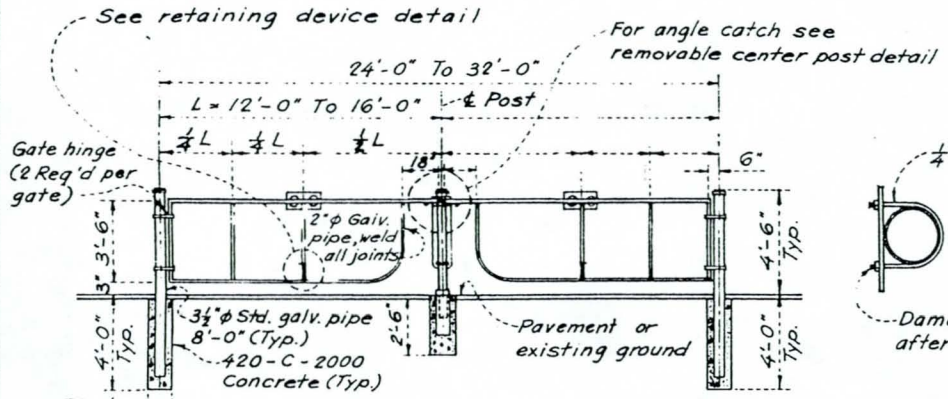

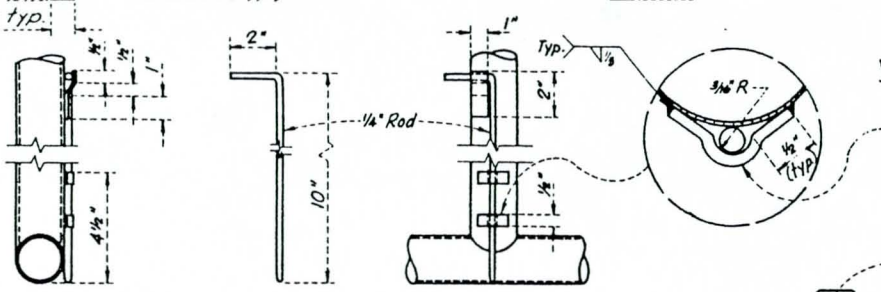

GATE RETAINING DEVICE DETAIL

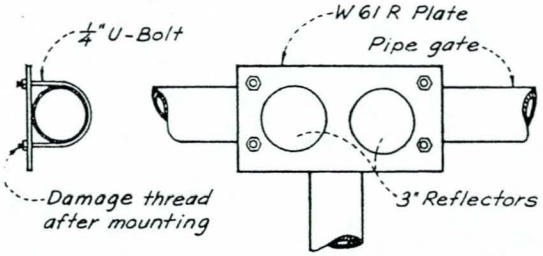

WARNING SIGN MOUNTING
PIPE GATE

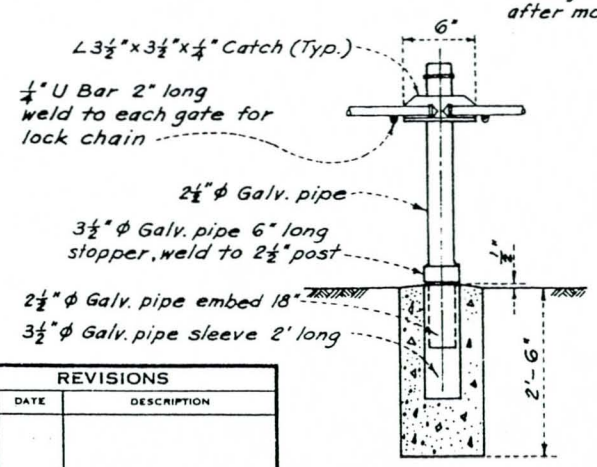

REMOVABLE CENTER POST

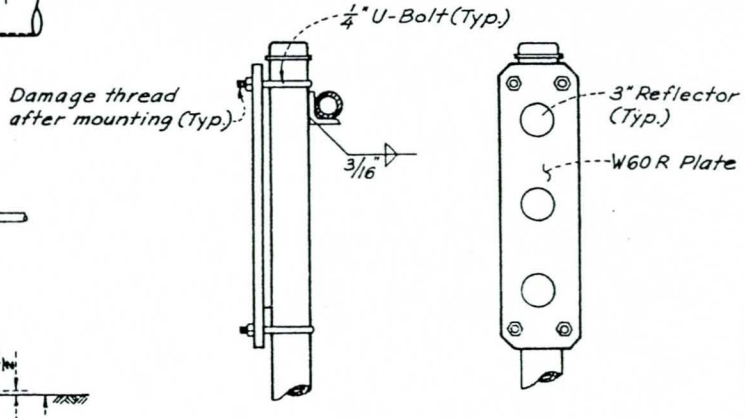

WARNING SIGN MOUNTING
CENTER POST

DESIGN NOTES

FOR A ROADWAY 16 FT. OR LESS WIDE USE A SINGLE GATE. PLACE THE ANGLE CATCH ON A PERMANENT END POST INSTALLED ACCORDING TO THE HINGE POST DETAIL.

W 60 R & W 61 R PLATES SHALL BE PER STATE OF CALIFORNIA "MANUAL OF WARNING SIGNS, LIGHTS AND DEVICES FOR USE IN PERFORMANCE OF WORK UPON HIGHWAY."

3. THE REFLECTORS SHALL BE CUT FROM YELLOW "SCOTCHLITE" - FLAT TOP REFLECTIVE SHEETING, AS MANUFACTURED BY MINNESOTA MINING AND MANUFACTURING COMPANY, OR DISTRICT APPROVED EQUIVALENT.
4. PAINT GATE WITH ONE COAT OF ALUMINUM PAINT AFTER FABRICATION.
5. GATE HINGES SHALL BE HEAVY DUTY, MALLEABLE IRON OR STEEL, INDUSTRIAL SERVICE TYPE 270 DEGREE SWING, OR DISTRICT APPROVED EQUAL.
6. USE 100% PENETRATION GROOVE WELDS FOR PIPE CONNECTIONS.
7. THE PIPE SHALL BE CUT TO PROVIDE A CLOSE FIT-UP OF THE JOINTS.
8. ALL PIPE SIZES ARE STANDARD WEIGHT NOMINAL SIZE PER AISC. MANUAL OF STEEL CONSTRUCTION.

DRAWN BY	REVISIONS		
J. Ong	MARK	DATE	DESCRIPTION
CHECKED BY V.C.M.			
DESIGNED BY C.C.C.			
SUBMITTED BY R.J.S.			

LOS ANGELES COUNTY
FLOOD CONTROL DISTRICT

STANDARD PIPE GATE

FOR ACCESS ROADS

RECOMMENDED BY D. Symike — DIVISION ENGINEER (DESIGN)

APPROVAL RECOMMENDED BY C. Magnuson — ASS'T CHIEF DEPUTY ENGINEER

APPROVED BY A. E. Cunningham — CHIEF ENGINEER - CIVIL ENGINEER NO. 8726 — 6-27-74

SCALE	DATE	DWG. NO. 2-D480
NONE	6-13-74	SHEET 1 OF 1

REINFORCED CONCRETE PIPE

ALLOWABLE CRACK WIDTH — THREE EDGE BEARING TEST

PIPE DIAMETERS TO 96 INCHES					
PIPE WALL THICKNESS (INCHES)	CONCRETE COVER ON TRANSVERSE REINFORCEMENT (INCHES)				
	0.75	1.25	1.75	2.25	2.75
2.5	0.010	0.015			
3.0	0.010	0.014			
3.5	0.010	0.013	0.018		
4.0	0.010	0.013	0.017		
4.5	0.010	0.012	0.015	0.020	
5.0	0.010	0.012	0.015	0.018	
5.5	0.010	0.012	0.014	0.017	0.021
6.0	0.010	0.012	0.013	0.016	0.019
6.5	0.010	0.012	0.013	0.015	0.018
7.0	0.010	0.011	0.013	0.015	0.017
7.5	0.010	0.011	0.013	0.014	0.017
8.0	0.010	0.011	0.012	0.014	0.016
8.5	0.010	0.011	0.012	0.014	0.015
9.0	0.010	0.011	0.012	0.013	0.015
9.5 TO 10.50	0.010	0.011	0.012	0.013	0.014

PIPE DIAMETERS GREATER THAN 96 INCHES					
PIPE WALL THICKNESS (INCHES)	CONCRETE COVER ON TRANSVERSE REINFORCEMENT (INCHES)				
	1.00	1.50	2.00	2.50	3.00
8.0	0.010	0.011	0.012	0.014	0.016
8.5	0.010	0.011	0.012	0.014	0.016
9.0	0.010	0.011	0.012	0.014	0.015
9.5	0.010	0.011	0.012	0.013	0.015
10.0	0.010	0.011	0.012	0.013	0.014
10.5	0.010	0.011	0.012	0.013	0.014
11.0	0.010	0.011	0.012	0.013	0.014
11.5	0.010	0.011	0.012	0.013	0.014
12.0	0.010	0.011	0.012	0.013	0.014

NOTES:

1. CONCRETE COVER IS MEASURED BETWEEN REINFORCEMENT SURFACE AND CONCRETE SURFACE.
2. THE TEST PIPE SHALL WITHSTAND THE TEST LOAD BEFORE A CRACK HAVING A WIDTH EQUAL TO THE TABULATED VALUE, MEASURED AT CLOSE INTERVALS, OCCURS THROUGHOUT A LENGTH OF ONE FOOT OR MORE.
3. THE TABULATED CRACK WIDTH DIMENSIONS ARE MEASURED IN INCHES.

	REVISIONS		
DRAWN BY J. Ong	MARK	DATE	DESCRIPTION
CHECKED BY V.M.			
ENGINEERED BY R.J.S.			
SUBMITTED BY R.J.S.			

LOS ANGELES COUNTY
FLOOD CONTROL DISTRICT

REINFORCED CONCRETE PIPE
ALLOWABLE CRACK WIDTHS
THREE EDGE BEARING TEST

RECOMMENDED BY: DIVISION ENGINEER (ENGINEERING)
APPROVED RECOMMENDED BY: ASST CHIEF DEPUTY ENGINEER
APPROVED BY: CHIEF ENGINEER - CIVIL ENGINEER NO. 8736 — 11-1-74

SCALE	DATE	DWG. NO. 2D-481
NONE	10-18-74	SHEET 1 OF 1

RAILROAD

REQUIRED "D" LOAD FOR REINFORCED CONCRETE PIPE LAID PER STD. DWG. 2-D177

CASE III BEDDING DESIGN DENSITY = 140 P.C.F.

PIPE SIZE	DEPTH OF COVER IN FEET																								PIPE SIZE
	2	3	4	5	6	7	8	9	10	11	12	13	14	15	16	17	18	19	20	21	22	23	24	25	
12	3000	2750	2750	3000	3000	3000	3000	3000	3000	3250	3250	3250	3250	3250	3500	3500	3500	3500	3500	3500	3500	3750	3750	3750	12
15	2750			2750	2750	2750	2750	2750	2750	2750	3000	3000	3000	3000	3250	3250	3250	3250	3250	3250	3250	3500	3500	3500	15
18	2500	2500	2500	2500	2500	2500	2500	2500			2750	2750			3000	3000	3000	3000				3250	3250	3250	18
21									2500	2500			2750	2750	2750				3000	3000	3000	3000			21
24		2250	2250	2250	2250	2250	2250				2500	2500				2750	2750						3000	3000	24
27	2250							2250	2250				2500					2750							27
30										2250				2500					2750						30
33															2500					2750					33
36											2250										2750				36
39	2200	2100	2100	2000	2000	2000	2100	2100	2100	2200	2300	2300	2400	2400		2500	2600	2600	2700	2700	2800	2800	2900	2900	39
42	2100		2000				2000				2200		2300										2800		42
45		2000						2000		2100					2400										45
48																	2500		2600		2700				48
51									2000			2200													51
54				1900	1900	1900								2300											54
57			1900				1900				2100														57
60																2400									60
63	2000	1950						1950	1950	2050		2150	2250		2350			2550		2650		2750		2850	63
66				1850	1850	1850		1900		2000			2200				2450						2800	2850	66
69																									69
72		1900					1850							2250											72
75			1850								2050							2500	2600	2650	2700	2750			75
78																									78
81									1900						2350	2400	2450	2500						2850	81
84	1950				1800			1850				2100			2300										84
87				1800		1800																	2850		87
90										1950	2050	2100	2200	2250											90
93																									93
96													2150												96
102		1850	1800				1800															2800			102
108											2000														108

TRENCH CONDITION — TRENCH WIDTH = O.D. + 20 INCHES

DATA:

Load factor = 1.8

Live load – Railroad Coopers E-72

NOTES:

1. For General Notes see Sheet 1.

DRAWN BY	REVISIONS		
JCH	MARK	DATE	DESCRIPTION
CHECKED BY JJS			
DESIGNED BY FR			
SUBMITTED BY CWH			

LOS ANGELES COUNTY
FLOOD CONTROL DISTRICT

"D" LOAD TABLE FOR DESIGN OF REINFORCED CONCRETE PIPE

RECOMMENDED BY — DIVISION ENGINEER (DESIGN)

APPROVAL RECOMMENDED BY — ASS'T CHIEF DEPUTY ENGINEER

APPROVED BY — CHIEF ENGINEER — 12/22/70

SCALE	DATE	DWG. NO. 2-D213.
NONE	DEC. '70	SHEET 27 OF 27

CASE III PER STANDARD DRAWING 2-D177 - PROJECTION CONDITION - UNRESTRICTED TRENCH WIDTH

WALL THICKNESS = 10-1/2 INCHES
STEEL COVER = 1'-1/4 INCHES CLEAR

CAGE	DEPTH OF COVER																			
	0-1	2	3	4	5	6	7	8	9	10	11	12	13	14	15	16	17	18	19	20
A	0.99	0.65	0.54	0.53	0.55	0.59	0.63	0.69	0.74	0.80	0.83	0.90	0.97	1.05	1.12	1.20	1.27	1.35	1.43	1.51
B	1.46	0.97	0.81	0.80	0.84	0.89	0.95	1.03	1.11	1.20	1.24	1.34	1.44	1.55	1.65	1.76	1.87	1.99	2.10	2.22
C	0.99	0.65	0.54	0.53	0.55	0.59	0.63	0.69	0.74	0.80	0.83	0.90	0.97	1.05	1.12	1.20	1.27	1.35	1.43	1.51
D	0.48	0.32	0.27	0.27	0.28	0.30	0.32	0.34	0.37	0.39	0.41	0.44	0.47	0.50	0.53	0.57	0.77	1.14	1.61	2.23
C+D	1.46	0.97	0.81	0.80	0.84	0.89	0.95	1.03	1.11	1.20	1.24	1.34	1.44	1.55	1.65	1.76	2.04	2.49		
0.8D	0.38	0.26	0.22	0.22	0.22	0.24	0.26	0.27	0.30	0.31	0.33	0.35	0.38	0.40	0.42	0.46	0.62	0.92	1.29	1.78

WALL THICKNESS = 10-1/2 INCHES
STEEL COVER = 1-3/4 INCHES CLEAR

CAGE	DEPTH OF COVER																			
	0-1	2	3	4	5	6	7	8	9	10	11	12	13	14	15	16	17	18	19	20
A	0.99	0.65	0.54	0.53	0.55	0.59	0.63	0.69	0.74	0.80	0.83	0.90	0.97	1.05	1.12	1.20	1.27	1.35	1.43	1.51
B	1.55	1.03	0.86	0.85	0.89	0.94	1.01	1.09	1.18	1.27	1.31	1.42	1.53	1.64	1.76	1.87	1.99	2.11	2.23	2.35
C	0.99	0.65	0.54	0.53	0.55	0.59	0.63	0.69	0.74	0.80	0.83	0.90	0.97	1.05	1.12	1.20	1.27	1.35	1.43	1.51
D	0.51	0.34	0.29	0.29	0.30	0.32	0.34	0.36	0.39	0.42	0.43	0.47	0.50	0.54	0.68	1.06	1.54	2.19		
C+D	1.55	1.03	0.86	0.85	0.89	0.94	1.01	1.09	1.18	1.27	1.31	1.42	1.53	1.64	1.87	2.32	2.89			
0.8D	0.41	0.27	0.23	0.23	0.24	0.26	0.27	0.29	0.31	0.34	0.34	0.38	0.40	0.43	0.54	0.85	1.23	1.75		

WALL THICKNESS = 12 INCHES
STEEL COVER = 1'-1/4 INCHES CLEAR

CAGE	DEPTH OF COVER																			
	0-1	2	3	4	5	6	7	8	9	10	11	12	13	14	15	16	17	18	19	20
A	0.86	0.56	0.47	0.47	0.48	0.51	0.55	0.59	0.64	0.69	0.72	0.78	0.84	0.90	0.96	1.03	1.09	1.16	1.22	1.29
B	1.32	0.87	0.73	0.73	0.75	0.80	0.85	0.92	0.99	1.07	1.11	1.19	1.28	1.38	1.47	1.57	1.66	1.76	1.86	1.96
C	0.86	0.56	0.47	0.47	0.48	0.51	0.55	0.59	0.64	0.69	0.72	0.78	0.84	0.90	0.96	1.03	1.09	1.16	1.22	1.29
D	0.46	0.31	0.26	0.26	0.27	0.28	0.30	0.32	0.35	0.37	0.39	0.42	0.45	0.48	0.51	0.54	0.57	0.61	0.64	0.67
C+D	1.32	0.87	0.73	0.73	0.75	0.80	0.85	0.92	0.99	1.07	1.11	1.19	1.28	1.38	1.47	1.57	1.66	1.76	1.86	1.96
0.8D	0.37	0.25	0.21	0.21	0.22	0.22	0.24	0.26	0.28	0.30	0.31	0.34	0.36	0.38	0.41	0.43	0.46	0.49	0.51	0.54

WALL THICKNESS = 12 INCHES
STEEL COVER = 1'-3/4 INCHES CLEAR

CAGE	DEPTH OF COVER																			
	0-1	2	3	4	5	6	7	8	9	10	11	12	13	14	15	16	17	18	19	20
A	0.86	0.56	0.47	0.47	0.48	0.51	0.55	0.59	0.64	0.69	0.72	0.78	0.84	0.90	0.96	1.03	1.09	1.16	1.22	1.29
B	1.39	0.92	0.77	0.76	0.79	0.84	0.90	0.97	1.04	1.12	1.16	1.26	1.35	1.45	1.55	1.65	1.75	1.85	1.96	2.07
C	0.86	0.56	0.47	0.47	0.48	0.51	0.55	0.59	0.64	0.69	0.72	0.78	0.84	0.90	0.96	1.03	1.09	1.16	1.22	1.29
D	0.49	0.33	0.28	0.28	0.29	0.30	0.32	0.34	0.37	0.40	0.41	0.44	0.47	0.51	0.54	0.57	0.61	0.64	0.68	0.86
C+D	1.39	0.92	0.77	0.76	0.79	0.84	0.90	0.97	1.04	1.12	1.16	1.26	1.35	1.45	1.55	1.65	1.75	1.85	1.96	2.21
0.8D	0.39	0.26	0.22	0.22	0.23	0.24	0.26	0.27	0.30	0.32	0.33	0.35	0.38	0.41	0.43	0.46	0.49	0.51	0.54	0.69

CASE III PER STANDARD DRAWING 2-D177 - DITCH CONDITION - TRENCH WIDTH = O.D. + 24 INCHES

WALL THICKNESS = 10-1/2 INCHES
STEEL COVER = 1'-1/4 INCHES CLEAR

CAGE	DEPTH OF COVER								
	11	12	13	14	15	16	17	18	19	20
A	0.74	0.78	0.82	0.86	0.90	0.93	0.97	1.01	1.04	1.08
B	1.10	1.16	1.22	1.27	1.33	1.38	1.44	1.49	1.54	1.59
C	0.74	0.78	0.82	0.86	0.90	0.93	0.97	1.01	1.04	1.08
D	0.36	0.38	0.40	0.42	0.43	0.45	0.47	0.48	0.50	0.51
C+D	1.10	1.16	1.22	1.27	1.33	1.38	1.44	1.49	1.54	1.59
0.8D	0.29	0.30	0.32	0.34	0.34	0.36	0.38	0.38	0.40	0.41

WALL THICKNESS = 12 INCHES
STEEL COVER = 1'-1/4 INCHES CLEAR

CAGE	DEPTH OF COVER									
	11	12	13	14	15	16	17	18	19	20
A	0.64	0.67	0.71	0.74	0.77	0.81	0.84	0.87	0.90	0.93
B	0.98	1.04	1.09	1.14	1.19	1.24	1.28	1.33	1.38	1.42
C	0.64	0.67	0.71	0.74	0.77	0.81	0.84	0.87	0.90	0.93
D	0.35	0.36	0.38	0.40	0.42	0.43	0.45	0.46	0.48	0.49
C+D	0.98	1.04	1.09	1.14	1.19	1.24	1.28	1.33	1.38	1.42
0.8D	0.28	0.29	0.30	0.32	0.34	0.34	0.36	0.37	0.38	0.39

WALL THICKNESS = 10-1/2 INCHES
STEEL COVER = 1'-3/4 INCHES CLEAR

CAGE	DEPTH OF COVER									
	11	12	13	14	15	16	17	18	19	20
A	0.74	0.78	0.82	0.86	0.90	0.93	0.97	1.01	1.04	1.08
B	1.17	1.23	1.29	1.35	1.41	1.47	1.52	1.58	1.63	1.69
C	0.74	0.78	0.82	0.86	0.90	0.93	0.97	1.01	1.04	1.08
D	0.39	0.41	0.43	0.45	0.46	0.48	0.50	0.52	0.53	0.55
C+D	1.17	1.23	1.29	1.35	1.41	1.47	1.52	1.58	1.63	1.69
0.8D	0.31	0.33	0.34	0.36	0.37	0.38	0.40	0.42	0.42	0.44

WALL THICKNESS = 12 INCHES
STEEL COVER = 1'-3/4 INCHES CLEAR

CAGE	DEPTH OF COVER									
	11	12	13	14	15	16	17	18	19	20
A	0.64	0.67	0.71	0.74	0.77	0.81	0.84	0.87	0.90	0.93
B	1.04	1.09	1.15	1.20	1.25	1.30	1.35	1.40	1.45	1.49
C	0.64	0.67	0.71	0.74	0.77	0.81	0.84	0.87	0.90	0.93
D	0.37	0.39	0.40	0.42	0.44	0.46	0.47	0.49	0.51	0.52
C+D	1.04	1.09	1.15	1.20	1.25	1.30	1.35	1.40	1.45	1.49
0.8D	0.30	0.31	0.32	0.34	0.35	0.37	0.38	0.39	0.41	0.42

NOTES:

1. THE VALUES SHOWN APPLY ONLY FOR THE BEDDING AND LOADING CONDITIONS NOTED.
2. FOR COVERS OF 10 FT. OR LESS, PIPE SHALL BE DESIGNED FOR THE PROJECTION CONDITION WITH UNRESTRICTED TRENCH WIDTH.
3. FOR COVERS OVER 10 FT., PIPE SHALL BE DESIGNED FOR APPLICABLE CONDITION. FOR DITCH CONDITION USE O.D. + 24 IN.

DESIGN DATA:

EARTH LOAD PER MARSTON'S FORMULAS:
W = 110 p.c.f. (CORRESPONDING TO AN ACTUAL EARTH WEIGHT)
K = K' = .150
LIVE LOAD = 1-H20-S16 TRUCK
LOADS UNIFORM OVER 180° TOP AND 90° BOTTOM.
NO LATERAL LOADS
f'_c = 4500 p.s.i. f_s = 24,000 p.s.i.
f_c = 2025 p.s.i. n = 8

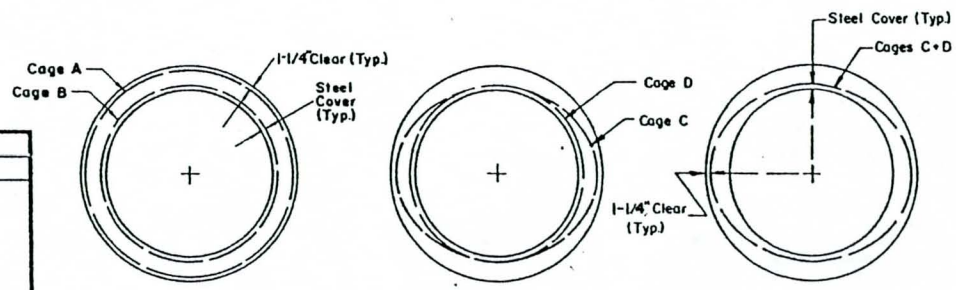

ALTERNATE NO. 1 ALTERNATE NO. 2 ALTERNATE NO. 3

DRAWN BY	REVISIONS		
J.C.H.	MARK	DATE	DESCRIPTION
CHECKED BY R.J.S.			
DESIGNED BY V.C.M.			
SUBMITTED BY C.W.H.			

SUPERSEDES DWG. NO. 2-D214.1-.4 DATED JAN. '55

LOS ANGELES COUNTY
FLOOD CONTROL DISTRICT

STEEL AREAS FOR
114 - INCH REINFORCED
CONCRETE PIPE

RECOMMENDED BY D. J. Milne DIVISION ENGINEER (ENGINEERING)
APPROVAL RECOMMENDED BY C. Bagnasco ASS'T CHIEF DEPUTY ENGINEER
APPROVED BY A. E. Bennington 1/5/70 CHIEF ENGINEER

SCALE	DATE	DWG. NO. 2-D214.1
NONE	1-1-71	SHEET 1 OF 6

CASE III PER STANDARD DRAWING 2-D177 - PROJECTION CONDITION - UNRESTRICTED TRENCH WIDTH

WALL THICKNESS = 11 INCHES
STEEL COVER = 1'-1/4 INCHES CLEAR

CAGE	DEPTH OF COVER																			
	0-1	2	3	4	5	6	7	8	9	10	11	12	13	14	15	16	17	18	19	20
A	1.06	0.69	0.57	0.57	0.59	0.63	0.67	0.73	0.78	0.85	0.88	0.95	1.02	1.10	1.17	1.25	1.33	1.41	1.49	1.58
B	1.57	1.04	0.86	0.86	0.89	0.94	1.01	1.09	1.17	1.26	1.31	1.41	1.52	1.62	1.73	1.85	1.96	2.08	2.20	2.32
C	1.06	0.69	0.57	0.57	0.59	0.63	0.67	0.73	0.78	0.85	0.88	0.95	1.02	1.10	1.17	1.25	1.33	1.41	1.49	1.58
D	0.51	0.34	0.29	0.29	0.30	0.32	0.34	0.36	0.39	0.41	0.43	0.46	0.49	0.53	0.56	0.59	0.75	1.11	1.58	2.18
C+D	1.57	1.04	0.86	0.86	0.89	0.94	1.01	1.09	1.17	1.26	1.31	1.41	1.52	1.62	1.73	1.85	2.08	2.53		
0.8D	0.41	0.28	0.24	0.24	0.24	0.26	0.28	0.29	0.32	0.33	0.35	0.37	0.40	0.43	0.45	0.48	0.60	0.89	1.27	1.75

WALL THICKNESS = 11 INCHES
STEEL COVER = 1'-3/4 INCHES CLEAR

CAGE	DEPTH OF COVER																			
	0-1	2	3	4	5	6	7	8	9	10	11	12	13	14	15	16	17	18	19	20
A	1.06	0.69	0.57	0.57	0.59	0.63	0.67	0.73	0.78	0.85	0.88	0.95	1.02	1.10	1.17	1.25	1.33	1.41	1.49	1.58
B	1.66	1.09	0.91	0.91	0.94	1.00	1.07	1.15	1.24	1.33	1.38	1.49	1.60	1.72	1.83	1.95	2.07	2.20	2.32	2.45
C	1.06	0.69	0.57	0.57	0.59	0.63	0.67	0.73	0.78	0.85	0.88	0.95	1.02	1.10	1.17	1.25	1.33	1.41	1.49	1.58
D	0.54	0.37	0.31	0.31	0.32	0.34	0.36	0.38	0.41	0.44	0.46	0.49	0.52	0.56	0.64	1.00	1.47	2.08	2.89	
C+D	1.66	1.09	0.91	0.91	0.94	1.00	1.07	1.15	1.24	1.33	1.38	1.49	1.60	1.72	1.88	2.32	2.87			
0.8D	0.44	0.30	0.25	0.25	0.26	0.28	0.29	0.31	0.33	0.36	0.37	0.40	0.42	0.45	0.52	0.80	1.18	1.67	2.32	

WALL THICKNESS = 12 INCHES
STEEL COVER = 1'-1/4 INCHES CLEAR

CAGE	DEPTH OF COVER																			
	0-1	2	3	4	5	6	7	8	9	10	11	12	13	14	15	16	17	18	19	20
A	0.97	0.63	0.52	0.52	0.54	0.57	0.62	0.66	0.71	0.77	0.80	0.86	0.93	1.00	1.06	1.13	1.21	1.28	1.35	1.43
B	1.47	0.97	0.81	0.80	0.83	0.88	0.94	1.01	1.09	1.17	1.21	1.31	1.41	1.50	1.61	1.71	1.81	1.92	2.03	2.14
C	0.97	0.63	0.52	0.52	0.54	0.57	0.62	0.66	0.71	0.77	0.80	0.86	0.93	1.00	1.06	1.13	1.21	1.28	1.35	1.43
D	0.50	0.33	0.28	0.28	0.29	0.31	0.33	0.35	0.37	0.40	0.41	0.45	0.48	0.51	0.54	0.57	0.61	0.64	0.68	0.79
C+D	1.47	0.97	0.81	0.80	0.83	0.88	0.94	1.01	1.09	1.17	1.21	1.31	1.41	1.50	1.61	1.71	1.81	1.92	2.03	2.21
0.8D	0.40	0.27	0.23	0.23	0.24	0.25	0.27	0.28	0.30	0.32	0.33	0.36	0.39	0.41	0.44	0.46	0.49	0.52	0.55	0.64

WALL THICKNESS = 12 INCHES
STEEL COVER = 1'-3/4 INCHES CLEAR

CAGE	DEPTH OF COVER																			
	0-1	2	3	4	5	6	7	8	9	10	11	12	13	14	15	16	17	18	19	20
A	0.97	0.63	0.52	0.52	0.54	0.57	0.62	0.66	0.71	0.77	0.80	0.86	0.93	1.00	1.06	1.13	1.21	1.28	1.35	1.43
B	1.54	1.02	0.85	0.85	0.88	0.93	0.99	1.06	1.15	1.23	1.28	1.38	1.48	1.58	1.69	1.80	1.91	2.02	2.13	2.25
C	0.97	0.63	0.52	0.52	0.54	0.57	0.62	0.66	0.71	0.77	0.80	0.86	0.93	1.00	1.06	1.13	1.21	1.28	1.35	1.43
D	0.53	0.35	0.30	0.30	0.31	0.33	0.35	0.37	0.40	0.43	0.44	0.47	0.51	0.54	0.57	0.61	0.65	0.68	1.03	1.45
C+D	1.54	1.02	0.85	0.85	0.88	0.93	0.99	1.06	1.15	1.23	1.28	1.38	1.48	1.58	1.69	1.80	1.91	2.02	2.45	2.94
0.8D	0.43	0.28	0.24	0.24	0.25	0.27	0.28	0.30	0.32	0.35	0.36	0.38	0.41	0.44	0.46	0.49	0.52	0.55	0.83	1.16

CASE III PER STANDARD DRAWING 2-D177 - DITCH CONDITION - TRENCH WIDTH = O.D. + 24 INCHES

WALL THICKNESS = 11 INCHES
STEEL COVER = 1'-1/4 INCHES CLEAR

CAGE	DEPTH OF COVER									
	11	12	13	14	15	16	17	18	19	20
A	0.78	0.83	0.87	0.91	0.95	0.99	1.03	1.07	1.10	1.14
B	1.17	1.23	1.29	1.35	1.41	1.47	1.52	1.58	1.63	1.69
C	0.78	0.83	0.87	0.91	0.95	0.99	1.03	1.07	1.10	1.14
D	0.38	0.40	0.42	0.44	0.46	0.48	0.49	0.51	0.53	0.54
C+D	1.17	1.23	1.29	1.35	1.41	1.47	1.52	1.58	1.63	1.69
0.8D	0.31	0.32	0.34	0.36	0.37	0.39	0.40	0.41	0.43	0.44

WALL THICKNESS = 12 INCHES
STEEL COVER = 1'-1/4 INCHES CLEAR

CAGE	DEPTH OF COVER									
	11	12	13	14	15	16	17	18	19	20
A	0.71	0.75	0.79	0.83	0.86	0.90	0.94	0.97	1.00	1.04
B	1.09	1.14	1.20	1.26	1.31	1.36	1.42	1.47	1.52	1.57
C	0.71	0.75	0.79	0.83	0.86	0.90	0.94	0.97	1.00	1.04
D	0.37	0.39	0.41	0.43	0.45	0.46	0.48	0.50	0.51	0.53
C+D	1.09	1.14	1.20	1.26	1.31	1.36	1.42	1.47	1.52	1.57
0.8D	0.30	0.32	0.33	0.35	0.36	0.37	0.39	0.40	0.41	0.43

WALL THICKNESS = 11 INCHES
STEEL COVER = 1'-3/4 INCHES CLEAR

CAGE	DEPTH OF COVER									
	11	12	13	14	15	16	17	18	19	20
A	0.78	0.83	0.87	0.91	0.95	0.99	1.03	1.07	1.10	1.14
B	1.23	1.30	1.36	1.43	1.49	1.55	1.61	1.67	1.73	1.78
C	0.78	0.83	0.87	0.91	0.95	0.99	1.03	1.07	1.10	1.14
D	0.41	0.43	0.45	0.47	0.49	0.51	0.53	0.55	0.56	0.58
C+D	1.23	1.30	1.36	1.43	1.49	1.55	1.61	1.67	1.73	1.78
0.8D	0.33	0.35	0.36	0.38	0.40	0.41	0.43	0.44	0.45	0.47

WALL THICKNESS = 12 INCHES
STEEL COVER = 1'-3/4 INCHES CLEAR

CAGE	DEPTH OF COVER									
	11	12	13	14	15	16	17	18	19	20
A	0.71	0.75	0.79	0.83	0.86	0.90	0.94	0.97	1.00	1.04
B	1.14	1.20	1.26	1.32	1.38	1.43	1.49	1.54	1.60	1.65
C	0.71	0.75	0.79	0.83	0.86	0.90	0.94	0.97	1.00	1.04
D	0.40	0.42	0.44	0.45	0.47	0.49	0.51	0.53	0.54	0.56
C+D	1.14	1.20	1.26	1.32	1.38	1.43	1.49	1.54	1.60	1.65
0.8D	0.32	0.34	0.36	0.36	0.38	0.40	0.41	0.43	0.44	0.45

NOTES:

1. THE VALUES SHOWN APPLY ONLY FOR THE BEDDING AND LOADING CONDITIONS NOTED.
2. FOR COVERS OF 10 FT. OR LESS, PIPE SHALL BE DESIGNED FOR THE PROJECTION CONDITION WITH UNRESTRICTED TRENCH WIDTH.
3. FOR COVERS OVER 10 FT., PIPE SHALL BE DESIGNED FOR APPLICABLE CONDITION. FOR DITCH CONDITION USE O.D. + 24 IN.

DESIGN DATA:

EARTH LOAD PER MARSTON'S FORMULAS:
W = 110 p.c.f. (CORRESPONDING TO AN ACTUAL EARTH WEIGHT)
K = K' = .150
LIVE LOAD = 1-H20-S16 TRUCK
LOADS UNIFORM OVER 180° TOP AND 90° BOTTOM.
NO LATERAL LOADS
fc' = 4500 p.s.i. fs = 24,000 p.s.i.
fc = 2025 p.s.i. n = 8

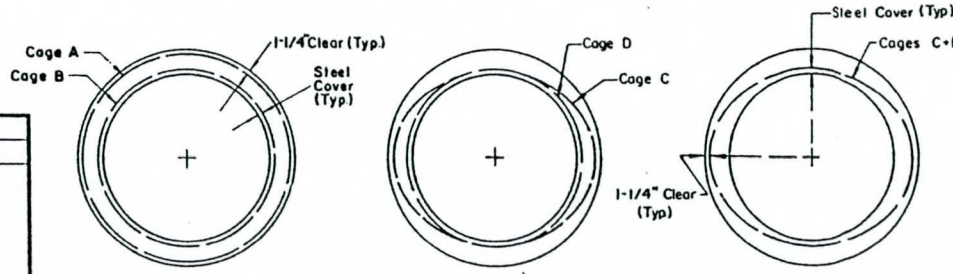

ALTERNATE NO. 1 ALTERNATE NO. 2 ALTERNATE NO. 3

DRAWN BY	REVISIONS		
J.C.H.	MARK	DATE	DESCRIPTION
CHECKED BY R.J.S.			
DESIGNED BY V.C.M.			
SUBMITTED BY C.W.H.			

SUPERSEDES DWG. NO. 2-D214.1-.4 DATED JAN. '55

LOS ANGELES COUNTY
FLOOD CONTROL DISTRICT

STEEL AREAS FOR
120-INCH REINFORCED
CONCRETE PIPE

RECOMMENDED BY: Hymine, DIVISION ENGINEER (DESIGN)
APPROVAL RECOMMENDED BY: C. Fragasso, ASS'T CHIEF DEPUTY ENGINEER
APPROVED BY: A. E. Bennington 1/5/70, CHIEF ENGINEER

SCALE	DATE	DWG. NO. 2-D214.2
NONE	1-1-71	SHEET 2 OF 6

CASE III PER STANDARD DRAWING 2-D177 - PROJECTION CONDITION - UNRESTRICTED TRENCH WIDTH

WALL THICKNESS = 11 INCHES
STEEL COVER = 1-1/4 INCHES CLEAR

CAGE	DEPTH OF COVER																			
	0-1	2	3	4	5	6	7	8	9	10	11	12	13	14	15	16	17	18	19	20
A	1.19	0.77	0.64	0.63	0.66	0.70	0.75	0.80	0.87	0.94	0.97	1.05	1.13	1.21	1.29	1.38	1.47	1.55	1.64	1.73
B	1.75	1.14	0.95	0.95	0.98	1.04	1.11	1.19	1.28	1.38	1.43	1.54	1.65	1.77	1.89	2.01	2.13	2.26	2.39	2.52
C	1.19	0.77	0.64	0.63	0.66	0.70	0.75	0.80	0.87	0.94	0.97	1.05	1.13	1.21	1.29	1.38	1.47	1.55	1.64	1.73
D	0.55	0.37	0.31	0.31	0.32	0.34	0.36	0.39	0.41	0.44	0.46	0.49	0.52	0.56	0.59	0.86	1.29	1.84	2.56	
C+D	1.75	1.14	0.95	0.95	0.98	1.04	1.11	1.19	1.28	1.38	1.43	1.54	1.65	1.77	1.89	2.24	2.75			
0.8D	0.44	0.30	0.25	0.25	0.26	0.27	0.29	0.31	0.33	0.35	0.37	0.39	0.42	0.45	0.48	0.69	1.03	1.47	2.05	

WALL THICKNESS = 11 INCHES
STEEL COVER = 1-3/4 INCHES CLEAR

CAGE	DEPTH OF COVER																			
	0-1	2	3	4	5	6	7	8	9	10	11	12	13	14	15	16	17	18	19	20
A	1.19	0.77	0.64	0.63	0.66	0.70	0.75	0.80	0.87	0.94	0.97	1.05	1.13	1.21	1.29	1.38	1.47	1.55	1.64	1.73
B	1.85	1.21	1.01	1.00	1.04	1.10	1.17	1.26	1.36	1.46	1.51	1.63	1.75	1.87	2.00	2.13	2.26	2.39	2.52	2.66
C	1.19	0.77	0.64	0.63	0.66	0.70	0.75	0.80	0.87	0.94	0.97	1.05	1.13	1.21	1.29	1.38	1.47	1.55	1.64	1.73
D	0.65	0.40	0.34	0.33	0.34	0.36	0.39	0.41	0.44	0.47	0.49	0.52	0.56	0.72	1.13	1.67	2.39			
C+D	1.91	1.21	1.01	1.00	1.04	1.10	1.17	1.26	1.36	1.46	1.51	1.63	1.75	2.00	2.49					
0.8D	0.52	0.32	0.27	0.27	0.27	0.29	0.31	0.33	0.35	0.38	0.39	0.42	0.45	0.58	0.91	1.34	1.91			

WALL THICKNESS = 12 INCHES
STEEL COVER = 1-1/4 INCHES CLEAR

CAGE	DEPTH OF COVER																			
	0-1	2	3	4	5	6	7	8	9	10	11	12	13	14	15	16	17	18	19	20
A	1.09	0.71	0.58	0.58	0.60	0.64	0.68	0.73	0.79	0.85	0.88	0.95	1.02	1.10	1.17	1.25	1.33	1.41	1.49	1.57
B	1.63	1.07	0.89	0.89	0.92	0.97	1.03	1.11	1.19	1.28	1.32	1.43	1.53	1.64	1.75	1.86	1.97	2.09	2.21	2.32
C	1.09	0.71	0.58	0.58	0.60	0.64	0.68	0.73	0.79	0.85	0.88	0.95	1.02	1.10	1.17	1.25	1.33	1.41	1.49	1.57
D	0.54	0.36	0.31	0.30	0.31	0.33	0.35	0.37	0.40	0.43	0.44	0.47	0.51	0.54	0.58	0.61	0.65	0.68	0.94	1.33
C+D	1.63	1.07	0.89	0.89	0.92	0.97	1.03	1.11	1.19	1.28	1.32	1.43	1.53	1.64	1.75	1.86	1.97	2.09	2.43	2.90
0.8D	0.43	0.29	0.25	0.24	0.25	0.27	0.28	0.30	0.32	0.35	0.35	0.38	0.41	0.43	0.47	0.49	0.52	0.55	0.75	1.07

WALL THICKNESS = 12 INCHES
STEEL COVER = 1-3/4 INCHES CLEAR

CAGE	DEPTH OF COVER																			
	0-1	2	3	4	5	6	7	8	9	10	11	12	13	14	15	16	17	18	19	20
A	1.09	0.71	0.58	0.58	0.60	0.64	0.68	0.73	0.79	0.85	0.88	0.95	1.02	1.10	1.17	1.25	1.33	1.41	1.49	1.57
B	1.71	1.12	0.94	0.93	0.96	1.02	1.09	1.17	1.25	1.35	1.39	1.50	1.61	1.72	1.84	1.96	2.07	2.20	2.32	2.44
C	1.09	0.71	0.58	0.58	0.60	0.64	0.68	0.73	0.79	0.85	0.88	0.95	1.02	1.10	1.17	1.25	1.33	1.41	1.49	1.57
D	0.57	0.38	0.32	0.32	0.33	0.35	0.37	0.40	0.42	0.45	0.47	0.50	0.54	0.57	0.61	0.65	0.82	1.21	1.69	2.32
C+D	1.71	1.12	0.94	0.93	0.96	1.02	1.09	1.17	1.25	1.35	1.39	1.50	1.61	1.72	1.84	1.96	2.21	2.68		
0.8D	0.46	0.31	0.26	0.26	0.27	0.28	0.30	0.32	0.34	0.36	0.38	0.40	0.43	0.46	0.49	0.52	0.66	0.97	1.35	1.86

CASE III PER STANDARD DRAWING 2-D177 - DITCH CONDITION - TRENCH WIDTH = O.D. + 24 INCHES

WALL THICKNESS = INCHES
STEEL COVER = 1-1/4 INCHES CLEAR

CAGE	DEPTH OF COVER									
	11	12	13	14	15	16	17	18	19	20
A	0.87	0.92	0.96	1.01	1.06	1.10	1.14	1.19	1.23	1.27
B	1.28	1.35	1.42	1.48	1.55	1.61	1.67	1.73	1.79	1.85
C	0.87	0.92	0.96	1.01	1.06	1.10	1.14	1.19	1.23	1.27
D	0.41	0.43	0.45	0.47	0.49	0.51	0.53	0.55	0.57	0.58
C+D	1.28	1.35	1.42	1.48	1.55	1.61	1.67	1.73	1.79	1.85
0.8D	0.33	0.35	0.36	0.38	0.39	0.41	0.43	0.44	0.46	0.47

WALL THICKNESS = 12 INCHES
STEEL COVER = 1-1/4 INCHES CLEAR

CAGE	DEPTH OF COVER									
	11	12	13	14	15	16	17	18	19	20
A	0.79	0.84	0.88	0.92	0.96	1.00	1.04	1.08	1.12	1.15
B	1.19	1.26	1.32	1.38	1.44	1.50	1.55	1.61	1.67	1.72
C	0.79	0.84	0.88	0.92	0.96	1.00	1.04	1.08	1.12	1.15
D	0.40	0.42	0.44	0.46	0.48	0.50	0.51	0.53	0.55	0.57
C+D	1.19	1.28	1.32	1.38	1.44	1.50	1.55	1.61	1.67	1.72
0.8D	0.32	0.34	0.35	0.37	0.39	0.40	0.41	0.43	0.44	0.46

WALL THICKNESS = INCHES
STEEL COVER = 1-3/4 INCHES CLEAR

CAGE	DEPTH OF COVER									
	11	12	13	14	15	16	17	18	19	20
A	0.87	0.92	0.96	1.01	1.06	1.10	1.14	1.19	1.23	1.27
B	1.36	1.43	1.50	1.57	1.64	1.70	1.77	1.83	1.90	1.96
C	0.87	0.92	0.96	1.01	1.06	1.10	1.14	1.19	1.23	1.27
D	0.44	0.46	0.48	0.51	0.53	0.55	0.57	0.58	0.79	0.99
C+D	1.36	1.43	1.50	1.57	1.64	1.70	1.77	1.83	2.09	2.32
0.8D	0.35	0.37	0.39	0.41	0.43	0.44	0.46	0.47	0.63	0.79

WALL THICKNESS = 12 INCHES
STEEL COVER = 1-3/4 INCHES CLEAR

CAGE	DEPTH OF COVER									
	11	12	13	14	15	16	17	18	19	20
A	0.79	0.84	0.88	0.92	0.96	1.00	1.04	1.08	1.12	1.15
B	1.26	1.32	1.39	1.45	1.51	1.57	1.63	1.69	1.75	1.81
C	0.79	0.84	0.88	0.92	0.96	1.00	1.04	1.08	1.12	1.15
D	0.42	0.45	0.47	0.49	0.51	0.53	0.55	0.56	0.58	0.60
C+D	1.26	1.32	1.39	1.45	1.51	1.57	1.63	1.69	1.75	1.81
0.8D	0.34	0.36	0.38	0.39	0.41	0.43	0.44	0.45	0.47	0.48

NOTES:

1. THE VALUES SHOWN APPLY ONLY FOR THE BEDDING AND LOADING CONDITIONS NOTED.
2. FOR COVERS OF 10 FT. OR LESS, PIPE SHALL BE DESIGNED FOR THE PROJECTION CONDITION WITH UNRESTRICTED TRENCH WIDTH.
3. FOR COVERS OVER 10 FT., PIPE SHALL BE DESIGNED FOR APPLICABLE CONDITION. FOR DITCH CONDITION USE O.D. + 24 IN.

DESIGN DATA:

EARTH LOAD PER MARSTON'S FORMULAS:
W = 110 p.c.f. (CORRESPONDING TO AN ACTUAL EARTH WEIGHT)
K = K' = .150
LIVE LOAD = 1-H20-S16 TRUCK
LOADS UNIFORM OVER 180° TOP AND 90° BOTTOM.
NO LATERAL LOADS
fc' = 4500 p.s.i. fs = 24,000 p.s.i.
fc = 2025 p.s.i. n = 8

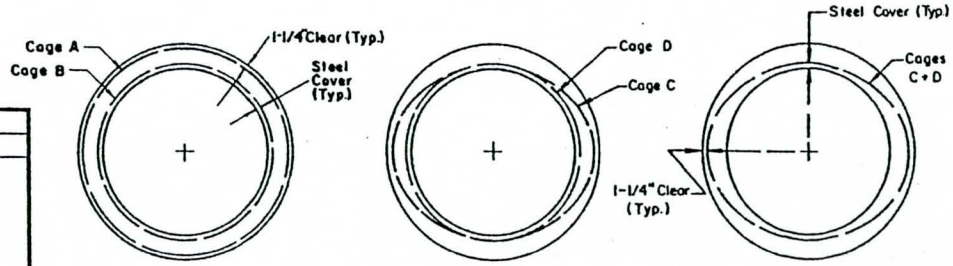

ALTERNATE NO. 1 ALTERNATE NO. 2 ALTERNATE NO. 3

DRAWN BY	REVISIONS		
J.C.H.	MARK	DATE	DESCRIPTION
CHECKED BY R.J.S.			
DESIGNED BY V.C.M.			
SUBMITTED BY C.W.H.			

SUPERSEDES DWG. NO. 2-D214.1-.4 DATED JAN. '55

LOS ANGELES COUNTY
FLOOD CONTROL DISTRICT

STEEL AREAS FOR
126 - INCH REINFORCED
CONCRETE PIPE

RECOMMENDED BY: DIVISION ENGINEER (DESIGN)
APPROVAL RECOMMENDED BY: ASS'T CHIEF DEPUTY ENGINEER
APPROVED BY: A. E. Bumagin 1/5/70 CHIEF ENGINEER

SCALE	DATE	DWG. NO. 2-D214.3
NONE	1-1-71	SHEET 3 OF 6

CASE III PER STANDARD DRAWING 2-D177 - PROJECTION CONDITION - UNRESTRICTED TRENCH WIDTH

WALL THICKNESS = 11.5 INCHES
STEEL COVER = 1'-1/4 INCHES CLEAR

CAGE	DEPTH OF COVER																			
	0-1	2	3	4	5	6	7	8	9	10	11	12	13	14	15	16	17	18	19	20
A	1.27	0.82	0.68	0.67	0.70	0.74	0.79	0.85	0.91	0.98	1.02	1.10	1.18	1.26	1.35	1.44	1.53	1.62	1.71	1.80
B	1.86	1.21	1.01	1.00	1.04	1.10	1.11	1.25	1.35	1.45	1.50	1.61	1.73	1.85	1.97	2.10	2.22	2.35	2.48	2.62
C	1.27	0.82	0.68	0.67	0.70	0.74	0.79	0.85	0.91	0.98	1.02	1.10	1.18	1.26	1.35	1.44	1.53	1.62	1.71	1.80
D	0.59	0.39	0.33	0.33	0.34	0.36	0.38	0.41	0.43	0.46	0.48	0.51	0.55	0.58	0.62	0.83	1.25	1.78	2.48	
C+D	1.86	1.21	1.01	1.00	1.04	1.10	1.17	1.25	1.35	1.45	1.50	1.61	1.73	1.85	1.97	2.27	2.78			
0.8D	0.47	0.31	0.27	0.27	0.27	0.29	0.31	0.33	0.35	0.37	0.39	0.41	0.44	0.47	0.50	0.67	1.00	1.42	1.98	2.71

WALL THICKNESS = 11.5 INCHES
STEEL COVER = 1-3/4 INCHES CLEAR

CAGE	DEPTH OF COVER																			
	0-1	2	3	4	5	6	7	8	9	10	11	12	13	14	15	16	17	18	19	20
A	1.27	0.82	0.68	0.67	0.70	0.74	0.79	0.85	0.91	0.98	1.02	1.10	1.18	1.26	1.35	1.44	1.53	1.62	1.71	1.80
B	1.96	1.28	1.06	1.06	1.10	1.16	1.23	1.32	1.42	1.53	1.58	1.70	1.82	1.95	2.08	2.21	2.34	2.48	2.62	2.76
C	1.27	0.82	0.68	0.67	0.70	0.74	0.79	0.85	0.91	0.98	1.02	1.10	1.18	1.26	1.35	1.44	1.53	1.62	1.71	1.80
D	0.70	0.42	0.35	0.35	0.36	0.38	0.41	0.43	0.46	0.49	0.51	0.53	0.58	0.62	1.07	1.58	2.26			
C+D	2.04	1.28	1.06	1.06	1.10	1.16	1.23	1.32	1.42	1.53	1.50	1.70	1.82	1.95	2.48					
0.8D	0.50	0.34	0.28	0.28	0.29	0.31	0.33	0.33	0.37	0.39	0.41	0.44	0.47	0.50	0.86	1.26	1.81	2.54		

WALL THICKNESS = 12 INCHES
STEEL COVER = 1'-1/4 INCHES CLEAR

CAGE	DEPTH OF COVER																			
	0-1	2	3	4	5	6	7	8	9	10	11	12	13	14	15	16	17	18	19	20
A	1.22	0.79	0.65	0.64	0.67	0.71	0.75	0.81	0.87	0.94	0.97	1.05	1.13	1.21	1.29	1.37	1.45	1.54	1.63	1.72
B	1.79	1.17	0.98	0.97	1.01	1.06	1.13	1.21	1.30	1.40	1.44	1.55	1.67	1.78	1.90	2.02	2.14	2.26	2.37	2.52
C	1.22	0.79	0.65	0.64	0.67	0.71	0.75	0.81	0.87	0.94	0.97	1.05	1.13	1.21	1.29	1.37	1.45	1.54	1.63	1.72
D	0.50	0.39	0.33	0.33	0.34	0.35	0.38	0.40	0.43	0.46	0.47	0.50	0.54	0.57	0.61	0.65	0.68	1.09	1.54	2.12
C+D	1.79	1.17	0.98	0.97	1.01	1.06	1.13	1.21	1.30	1.40	1.44	1.53	1.67	1.78	1.90	2.02	2.14	2.63		
0.8D	0.47	0.31	0.27	0.27	0.27	0.28	0.30	0.32	0.35	0.37	0.38	0.40	0.43	0.46	0.49	0.52	0.55	0.87	1.23	1.70

WALL THICKNESS = 12 INCHES
STEEL COVER = 1-3/4 INCHES CLEAR

CAGE	DEPTH OF COVER																			
	0-1	2	3	4	5	6	7	8	9	10	11	12	13	14	15	16	17	18	19	20
A	1.22	0.79	0.65	0.64	0.67	0.71	0.75	0.81	0.87	0.94	0.97	1.05	1.13	1.21	1.29	1.37	1.45	1.54	1.63	1.72
B	1.89	1.24	1.03	1.02	1.06	1.12	1.19	1.27	1.37	1.47	1.52	1.63	1.75	1.87	2.00	2.12	2.25	2.38	2.51	2.65
C	1.22	0.79	0.65	0.64	0.67	0.71	0.75	0.81	0.87	0.94	0.97	1.05	1.13	1.21	1.29	1.37	1.45	1.54	1.63	1.72
D	0.61	0.41	0.35	0.35	0.36	0.38	0.40	0.42	0.45	0.48	0.50	0.54	0.57	0.61	0.65	0.93	1.37	1.93	2.67	
C+D	1.89	1.24	1.03	1.02	1.06	1.12	1.19	1.27	1.37	1.47	1.52	1.63	1.75	1.87	2.00	2.36	2.89			
0.8D	0.49	0.33	0.28	0.28	0.29	0.31	0.32	0.34	0.36	0.39	0.40	0.43	0.46	0.49	0.52	0.75	1.10	1.55	2.14	2.92

CASE III PER STANDARD DRAWING 2-D177 - DITCH CONDITION - TRENCH WIDTH = O.D. + 24 INCHES

WALL THICKNESS = 11.5 INCHES
STEEL COVER = 1'-1/4 INCHES CLEAR

CAGE	DEPTH OF COVER									
	11	12	13	14	15	16	17	18	19	20
A	0.92	0.97	1.02	1.06	1.11	1.16	1.20	1.25	1.29	1.34
B	1.35	1.42	1.49	1.56	1.63	1.70	1.76	1.83	1.89	1.95
C	0.92	0.97	1.02	1.06	1.11	1.16	1.20	1.25	1.29	1.34
D	0.44	0.46	0.48	0.50	0.52	0.54	0.56	0.58	0.60	0.61
C+D	1.35	1.42	1.49	1.56	1.63	1.70	1.76	1.83	1.89	1.95
0.8D	0.35	0.37	0.39	0.40	0.42	0.43	0.45	0.47	0.48	0.49

WALL THICKNESS = 12 INCHES
STEEL COVER = 1'-1/4 INCHES CLEAR

CAGE	DEPTH OF COVER									
	11	12	13	14	15	16	17	18	19	20
A	0.88	0.92	0.97	1.02	1.06	1.11	1.15	1.19	1.23	1.27
B	1.31	1.38	1.44	1.51	1.57	1.64	1.70	1.76	1.82	1.88
C	0.88	0.92	0.97	1.02	1.06	1.11	1.15	1.19	1.23	1.27
D	0.43	0.45	0.47	0.49	0.51	0.53	0.55	0.57	0.59	0.60
C+D	1.31	1.38	1.44	1.51	1.57	1.64	1.70	1.76	1.82	1.88
0.8D	0.35	0.36	0.38	0.39	0.41	0.43	0.44	0.46	0.47	0.48

WALL THICKNESS = 11.5 INCHES
STEEL COVER = 1-3/4 INCHES CLEAR

CAGE	DEPTH OF COVER									
	11	12	13	14	15	16	17	18	19	20
A	0.92	0.97	1.02	1.06	1.11	1.16	1.20	1.25	1.29	1.34
B	1.43	1.50	1.58	1.65	1.72	1.79	1.86	1.93	1.99	2.06
C	0.92	0.97	1.02	1.06	1.11	1.16	1.20	1.25	1.29	1.34
D	0.46	0.49	0.51	0.53	0.55	0.57	0.59	0.61	0.79	0.99
C+D	1.43	1.50	1.58	1.65	1.72	1.79	1.86	1.93	2.15	2.39
0.8D	0.37	0.39	0.41	0.43	0.44	0.46	0.47	0.49	0.63	0.79

WALL THICKNESS = 12 INCHES
STEEL COVER = 1-3/4 INCHES CLEAR

CAGE	DEPTH OF COVER									
	11	12	13	14	15	16	17	18	19	20
A	0.88	0.92	0.97	1.02	1.06	1.11	1.15	1.19	1.23	1.27
B	1.37	1.45	1.52	1.59	1.66	1.72	1.79	1.85	1.91	1.98
C	0.88	0.92	0.97	1.02	1.06	1.11	1.15	1.19	1.23	1.27
D	0.46	0.48	0.50	0.52	0.54	0.56	0.58	0.60	0.62	0.64
C+D	1.37	1.45	1.52	1.59	1.66	1.72	1.79	1.85	1.91	1.98
0.8D	0.37	0.39	0.40	0.42	0.43	0.45	0.47	0.48	0.50	0.51

NOTES:

1. THE VALUES SHOWN APPLY ONLY FOR THE BEDDING AND LOADING CONDITIONS NOTED.
2. FOR COVERS OF 10 FT. OR LESS, PIPE SHALL BE DESIGNED FOR THE PROJECTION CONDITION WITH UNRESTRICTED TRENCH WIDTH.
3. FOR COVERS OVER 10 FT., PIPE SHALL BE DESIGNED FOR APPLICABLE CONDITION. FOR DITCH CONDITION USE O.D. + 24 IN.

DESIGN DATA:

EARTH LOAD PER MARSTON'S FORMULAS:
W = 110 p.c.f. (CORRESPONDING TO AN ACTUAL EARTH WEIGHT)
K = K' = .150
LIVE LOAD = 1-H20-S16 TRUCK
LOADS UNIFORM OVER 180° TOP AND 90° BOTTOM.
NO LATERAL LOADS
f_c' = 4500 p.s.i. f_s = 24,000 p.s.i.
f_c = 2025 p.s.i. n = 8

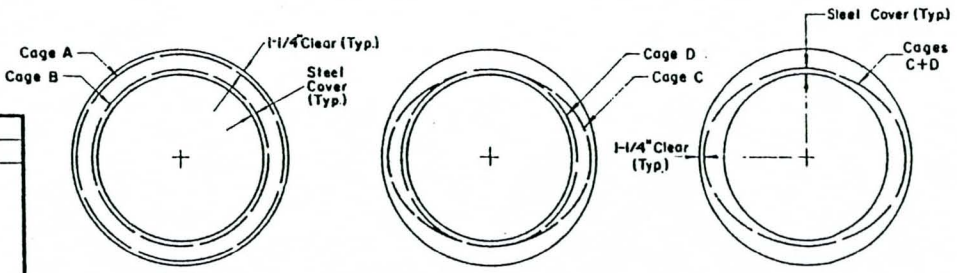

ALTERNATE NO. 1 ALTERNATE NO. 2 ALTERNATE NO. 3

DRAWN BY	REVISIONS		
G.D.M.	MARK	DATE	DESCRIPTION
CHECKED BY S.M.			
DESIGNED BY V.C.M.			
SUBMITTED BY C.W.H.			

SUPERSEDES DWG. NO. 2-D214.1-4 DATED JAN. '55

LOS ANGELES COUNTY
FLOOD CONTROL DISTRICT

STEEL AREAS FOR
132-INCH REINFORCED
CONCRETE PIPE

RECOMMENDED BY D. Milne DIVISION ENGINEER (DESIGN)
APPROVAL RECOMMENDED BY C. Fragnoso ASS'T CHIEF DEPUTY ENGINEER
APPROVED BY A. E. Bumgardner 1/5/70 CHIEF ENGINEER

SCALE	DATE	DWG. NO. 2-D214.4
NONE	1-1-71	SHEET 4 OF 6

CASE III PER STANDARD DRAWING 2-D177 - PROJECTION CONDITION - UNRESTRICTED TRENCH WIDTH

WALL THICKNESS = 11-1/2 INCHES
STEEL COVER = 1'-1/4 INCHES CLEAR

CAGE	DEPTH OF COVER																			
	0-1	2	3	4	5	6	7	8	9	10	11	12	13	14	15	16	17	18	19	20
A	1.41	0.91	0.75	0.74	0.77	0.81	0.87	0.93	1.00	1.08	1.11	1.20	1.29	1.38	1.47	1.57	1.67	1.76	1.86	1.97
B	2.04	1.33	1.11	1.10	1.14	1.20	1.28	1.37	1.47	1.57	1.62	1.75	1.87	2.00	2.13	2.27	2.40	2.54	2.68	2.82
C	1.41	0.91	0.75	0.74	0.77	0.81	0.87	0.93	1.00	1.08	1.11	1.20	1.29	1.38	1.47	1.57	1.67	1.76	1.86	1.97
D	0.63	0.42	0.36	0.36	0.37	0.39	0.41	0.43	0.46	0.50	0.51	0.55	0.58	0.62	0.92	1.38	1.99	2.80		
C+D	2.04	1.33	1.11	1.10	1.14	1.20	1.28	1.37	1.47	1.57	1.62	1.75	1.87	2.00	2.39	2.95				
0.8D	0.51	0.34	0.29	0.29	0.30	0.31	0.33	0.35	0.37	0.40	0.41	0.44	0.47	0.50	0.74	1.11	1.59	2.24		

WALL THICKNESS = 11-1/2 INCHES
STEEL COVER = 1-3/4 INCHES CLEAR

CAGE	DEPTH OF COVER																			
	0-1	2	3	4	5	6	7	8	9	10	11	12	13	14	15	16	17	18	19	20
A	1.41	0.91	0.75	0.74	0.77	0.81	0.87	0.93	1.00	1.08	1.11	1.20	1.29	1.38	1.47	1.57	1.67	1.76	1.86	1.97
B	2.15	1.40	1.17	1.16	1.20	1.26	1.35	1.44	1.55	1.66	1.71	1.84	1.97	2.11	2.25	2.39	2.53	2.68	2.83	2.98
C	1.41	0.91	0.75	0.74	0.77	0.81	0.87	0.93	1.00	1.08	1.11	1.20	1.29	1.38	1.47	1.57	1.67	1.76	1.86	1.97
D	1.31	0.45	0.38	0.38	0.39	0.41	0.43	0.46	0.49	0.53	0.54	0.58	0.72	1.15	1.72	2.49				
C+D	2.79	1.40	1.17	1.16	1.20	1.26	1.35	1.44	1.55	1.66	1.71	1.84	2.08	2.60						
0.8D	1.05	0.36	0.31	0.31	0.31	0.33	0.35	0.37	0.39	0.43	0.43	0.47	0.58	0.92	1.38	1.99	2.83			

WALL THICKNESS = 12 INCHES
STEEL COVER = 1'-1/4 INCHES CLEAR

CAGE	DEPTH OF COVER																			
	0-1	2	3	4	5	6	7	8	9	10	11	12	13	14	15	16	17	18	19	20
A	1.35	0.87	0.72	0.71	0.74	0.78	0.83	0.89	0.96	1.03	1.06	1.15	1.23	1.32	1.41	1.50	1.59	1.68	1.78	1.87
B	1.97	1.29	1.07	1.06	1.10	1.16	1.23	1.32	1.42	1.52	1.57	1.68	1.80	1.93	2.05	2.18	2.31	2.44	2.58	2.72
C	1.35	0.87	0.72	0.71	0.74	0.78	0.83	0.89	0.96	1.03	1.06	1.15	1.23	1.32	1.41	1.50	1.59	1.68	1.78	1.87
D	0.62	0.42	0.35	0.35	0.36	0.38	0.40	0.43	0.46	0.49	0.50	0.54	0.57	0.61	0.65	0.81	1.22	1.74	2.42	
C+D	1.97	1.29	1.07	1.06	1.10	1.16	1.23	1.32	1.42	1.52	1.57	1.68	1.80	1.93	2.05	2.31	2.81			
0.8D	0.50	0.34	0.28	0.28	0.29	0.31	0.32	0.35	0.37	0.39	0.40	0.43	0.46	0.49	0.52	0.65	0.98	1.39	1.94	

WALL THICKNESS = 12 INCHES
STEEL COVER = 1-3/4 INCHES CLEAR

CAGE	DEPTH OF COVER																			
	0-1	2	3	4	5	6	7	8	9	10	11	12	13	14	15	16	17	18	19	20
A	1.35	0.87	0.72	0.71	0.74	0.78	0.83	0.89	0.96	1.03	1.06	1.15	1.23	1.32	1.41	1.50	1.59	1.68	1.78	1.87
B	2.07	1.35	1.13	1.12	1.16	1.22	1.30	1.39	1.49	1.60	1.65	1.77	1.90	2.03	2.16	2.29	2.43	2.57	2.71	2.86
C	1.35	0.87	0.72	0.71	0.74	0.78	0.83	0.89	0.96	1.03	1.06	1.15	1.23	1.32	1.41	1.50	1.59	1.68	1.78	1.87
D	0.76	0.44	0.37	0.37	0.38	0.40	0.43	0.45	0.48	0.52	0.53	0.57	0.61	0.65	1.02	1.51	2.16	3.00		
C+D	2.18	1.35	1.13	1.12	1.16	1.22	1.30	1.39	1.49	1.60	1.65	1.77	1.90	2.03	2.49					
0.8D	0.61	0.35	0.30	0.30	0.30	0.32	0.35	0.36	0.39	0.42	0.43	0.46	0.49	0.52	0.82	1.21	1.73	2.40		

CASE III PER STANDARD DRAWING 2-D177 - DITCH CONDITION - TRENCH WIDTH = O.D. + 24 INCHES

WALL THICKNESS = 11-1/2 INCHES
STEEL COVER = 1'-1/4 INCHES CLEAR

CAGE	DEPTH OF COVER									
	11	12	13	14	15	16	17	18	19	20
A	1.01	1.06	1.12	1.17	1.22	1.28	1.33	1.37	1.42	1.47
B	1.48	1.55	1.63	1.71	1.78	1.85	1.92	1.99	2.06	2.13
C	1.01	1.06	1.12	1.17	1.22	1.28	1.33	1.37	1.42	1.47
D	0.47	0.49	0.51	0.53	0.55	0.58	0.60	0.62	0.64	0.90
C+D	1.48	1.55	1.63	1.71	1.78	1.85	1.92	1.99	2.06	2.37
0.8D	0.38	0.39	0.41	0.43	0.44	0.47	0.48	0.50	0.51	0.72

WALL THICKNESS = 12 INCHES
STEEL COVER = 1'-1/4 INCHES CLEAR

CAGE	DEPTH OF COVER									
	11	12	13	14	15	16	17	18	19	20
A	0.97	1.02	1.07	1.12	1.17	1.22	1.27	1.31	1.36	1.40
B	1.43	1.50	1.57	1.65	1.72	1.79	1.85	1.92	1.98	2.05
C	0.97	1.02	1.07	1.12	1.17	1.22	1.27	1.31	1.36	1.40
D	0.46	0.48	0.50	0.53	0.55	0.57	0.59	0.61	0.63	0.65
C+D	1.43	1.50	1.57	1.65	1.72	1.79	1.85	1.92	1.98	2.05
0.8D	0.37	0.38	0.40	0.42	0.44	0.46	0.47	0.49	0.51	0.52

WALL THICKNESS = 11-1/2 INCHES
STEEL COVER = 1-3/4 INCHES CLEAR

CAGE	DEPTH OF COVER									
	11	12	13	14	15	16	17	18	19	20
A	1.01	1.06	1.12	1.17	1.22	1.28	1.33	1.37	1.42	1.47
B	1.56	1.64	1.72	1.80	1.88	1.95	2.03	2.10	2.17	2.24
C	1.01	1.06	1.12	1.17	1.22	1.28	1.33	1.37	1.42	1.47
D	0.50	0.52	0.54	0.57	0.59	0.61	0.87	1.11	1.38	1.69
C+D	1.56	1.64	1.72	1.80	1.88	1.95	2.26	2.56	2.88	
0.8D	0.40	0.42	0.43	0.46	0.47	0.49	0.70	0.89	1.11	1.35

WALL THICKNESS = 12 INCHES
STEEL COVER = 1-3/4 INCHES CLEAR

CAGE	DEPTH OF COVER									
	11	12	13	14	15	16	17	18	19	20
A	0.97	1.02	1.07	1.12	1.17	1.22	1.27	1.31	1.36	1.40
B	1.50	1.58	1.65	1.73	1.80	1.88	1.95	2.02	2.09	2.15
C	0.97	1.02	1.07	1.12	1.17	1.22	1.27	1.31	1.36	1.40
D	0.49	0.51	0.53	0.56	0.58	0.60	0.62	0.64	0.80	1.00
C+D	1.50	1.58	1.65	1.73	1.80	1.88	1.95	2.02	2.22	2.47
0.8D	0.39	0.41	0.43	0.45	0.47	0.48	0.50	0.51	0.64	0.80

NOTES:

1. THE VALUES SHOWN APPLY ONLY FOR THE BEDDING AND LOADING CONDITIONS NOTED.
2. FOR COVERS OF 10 FT. OR LESS, PIPE SHALL BE DESIGNED FOR THE PROJECTION CONDITION WITH UNRESTRICTED TRENCH WIDTH.
3. FOR COVERS OVER 10 FT., PIPE SHALL BE DESIGNED FOR APPLICABLE CONDITION. FOR DITCH CONDITION USE O.D. + 24 IN.

DESIGN DATA:

EARTH LOAD PER MARSTON'S FORMULAS:
W = 110 p.c.f. (CORRESPONDING TO [illegible] ACTUAL E[illegible] WEIGHT)
K = K' = .150
LIVE LOAD = [illegible]-H20-S[illegible] TRUCK
LOADS UNIFORM OVER 180° TOP AND 90° BOTTOM.
NO LATERAL LOADS
fc' = 4500 p.s.i. fs = 24,000 p.s.i.
fc = 2025 p.s.i. n = 8

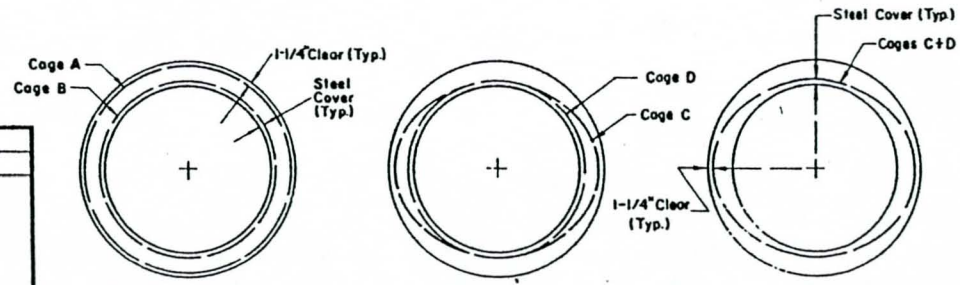

ALTERNATE NO. 1 ALTERNATE NO. 2 ALTERNATE NO. 3

DRAWN BY	REVISIONS		
G.D.M.	MARK	DATE	DESCRIPTION
CHECKED BY S.M.			
DESIGNED BY V.C.M.			
SUBMITTED BY C.W.H.			

SUPERSEDES DWG. NO. 2-D214.1-.4 DATED JAN. '55

LOS ANGELES COUNTY
FLOOD CONTROL DISTRICT

STEEL AREAS FOR
138 - INCH REINFORCED
CONCRETE PIPE

RECOMMENDED BY [illegible] DIVISION ENGINEER (INCHARGE)
APPROVAL RECOMMENDED BY [illegible] ASS'T CHIEF DEPUTY ENGINEER
APPROVED BY A. E. Bourington 1/5/70 CHIEF ENGINEER

SCALE	DATE	DWG. NO. 2-D214.5
NONE	1-1-71	SHEET 5 OF 6

CASE III PER STANDARD DRAWING 2-D177 - PROJECTION CONDITION - UNRESTRICTED TRENCH WIDTH

WALL THICKNESS = 12 INCHES
STEEL COVER = 1-1/4 INCHES CLEAR

CAGE	DEPTH OF COVER																			
	0-1	2	3	4	5	6	7	8	9	10	11	12	13	14	15	16	17	18	19	20
A	1.49	0.96	0.79	0.78	0.81	0.85	0.91	0.98	1.05	1.13	1.16	1.25	1.34	1.44	1.53	1.63	1.73	1.83	1.93	2.03
B	2.16	1.40	1.17	1.16	1.20	1.26	1.34	1.43	1.53	1.64	1.70	1.82	1.95	2.08	2.22	2.35	2.49	2.63	2.78	2.92
C	1.49	0.96	0.79	0.78	0.81	0.85	0.91	0.98	1.05	1.13	1.16	1.25	1.34	1.44	1.53	1.63	1.73	1.83	1.93	2.03
D	0.67	0.45	0.38	0.38	0.39	0.41	0.43	0.46	0.49	0.52	0.53	0.57	0.61	0.64	0.88	1.33	1.92	2.69		
C+D	2.16	1.40	1.17	1.16	1.20	1.26	1.34	1.43	1.53	1.64	1.70	1.82	1.95	2.08	2.42	2.96				
0.8D	0.54	0.36	0.30	0.30	0.31	0.33	0.34	0.37	0.39	0.42	0.42	0.46	0.49	0.51	0.70	1.06	1.53	2.15		

WALL THICKNESS = 12 INCHES
STEEL COVER = 1-3/4 INCHES CLEAR

CAGE	DEPTH OF COVER																			
	0-1	2	3	4	5	6	7	8	9	10	11	12	13	14	15	16	17	18	19	20
A	1.49	0.96	0.79	0.78	0.81	0.85	0.91	0.98	1.05	1.13	1.16	1.25	1.34	1.44	1.53	1.63	1.73	1.83	1.93	2.03
B	2.27	1.48	1.23	1.22	1.26	1.33	1.41	1.51	1.61	1.73	1.78	1.92	2.05	2.19	2.33	2.47	2.62	2.77	2.92	
C	1.49	0.96	0.79	0.78	0.81	0.85	0.91	0.98	1.05	1.13	1.16	1.25	1.34	1.44	1.53	1.63	1.73	1.83	1.93	2.03
D	1.38	0.48	0.40	0.40	0.41	0.43	0.46	0.48	0.52	0.55	0.56	0.60	0.64	1.09	1.63	2.35				
C+D	2.94	1.48	1.23	1.22	1.26	1.33	1.41	1.51	1.61	1.73	1.78	1.92	2.05	2.59						
0.8D	1.10	0.38	0.32	0.32	0.33	0.34	0.37	0.38	0.42	0.44	0.45	0.48	0.51	0.87	1.30	1.88				

CASE III PER STANDARD DRAWING 2-D177 - DITCH CONDITION - TRENCH WIDTH = O.D. + 24 INCHES

WALL THICKNESS = 12 INCHES
STEEL COVER = 1-1/4 INCHES CLEAR

CAGE	DEPTH OF COVER									
	11	12	13	14	15	16	17	18	19	20
A	1.06	1.12	1.17	1.23	1.28	1.34	1.39	1.44	1.49	1.54
B	1.55	1.63	1.71	1.79	1.87	1.94	2.01	2.09	2.16	2.23
C	1.06	1.12	1.17	1.23	1.28	1.34	1.39	1.44	1.49	1.54
D	0.49	0.51	0.54	0.56	0.58	0.60	0.63	0.65	0.67	0.92
C+D	1.55	1.63	1.71	1.79	1.87	1.94	2.01	2.09	2.16	2.46
0.8D	0.39	0.41	0.43	0.45	0.46	0.48	0.50	0.52	0.54	0.74

WALL THICKNESS = 12 INCHES
STEEL COVER = 1-3/4 INCHES CLEAR

CAGE	DEPTH OF COVER									
	11	12	13	14	15	16	17	18	19	20
A	1.06	1.12	1.17	1.23	1.28	1.34	1.39	1.44	1.49	1.54
B	1.63	1.72	1.80	1.88	1.96	2.04	2.12	2.19	2.27	2.34
C	1.06	1.12	1.07	1.23	1.28	1.34	1.39	1.44	1.49	1.54
D	0.52	0.54	0.57	0.59	0.62	0.64	0.86	1.10	1.37	1.68
C+D	1.63	1.72	1.80	1.88	1.96	2.04	2.32	2.61	2.93	
0.8D	0.42	0.43	0.46	0.47	0.50	0.51	0.69	0.88	1.10	1.34

NOTES:

1. THE VALUES SHOWN APPLY ONLY FOR THE BEDDING AND LOADING CONDITIONS NOTED.
2. FOR COVERS OF 10FT. OR LESS, PIPE SHALL BE DESIGNED FOR THE PROJECTION CONDITION WITH UNRESTRICTED TRENCH WIDTH.
3. FOR COVER OVER 10FT., PIPE SHALL BE DESIGNED FOR APPLICABLE CONDITION. FOR DITCH CONDITION USE O.D. + 24 IN.

DESIGN DATA:

EARTH LOAD PER MARSTON'S FORMULAS:
W = 110 p.c.f. (CORRESPONDING TO AN ACTUAL EARTH WEIGHT)
K = K' = .150
LIVE LOAD = 1-H20-S16 TRUCK
LOADS UNIFORM OVER 180° TOP AND 90° BOTTOM.
NO LATERAL LOADS
f_c' = 4500 p.s.i. f_s = 24,000 p.s.i.
f_c = 2025 p.s.i. n = 8

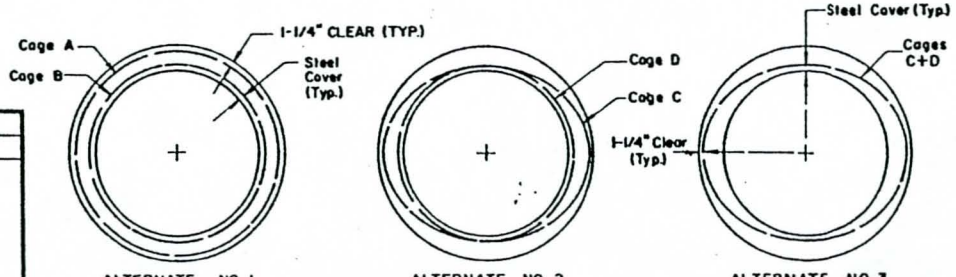

ALTERNATE NO. 1 ALTERNATE NO. 2 ALTERNATE NO. 3

DRAWN BY	REVISIONS		
J.C.H.	MARK	DATE	DESCRIPTION
CHECKED BY S.M.			
DESIGNED BY V.C.M.			
SUBMITTED BY C.W.H.			

SUPERSEDES DWG. NO. 2-D214.1-.4 DATED JAN. '55

LOS ANGELES COUNTY
FLOOD CONTROL DISTRICT

STEEL AREAS FOR
144 - INCH REINFORCED
CONCRETE PIPE

RECOMMENDED BY D. J. Milne DIVISION ENGINEER (DESIGN)
APPROVAL RECOMMENDED BY C. Magnuson ASS'T CHIEF DEPUTY ENGINEER
APPROVED BY A. E. Bennington 1/5/72 CHIEF ENGINEER

SCALE	DATE	DWG. NO. 2-D214.6
NONE	1-1-71	SHEET 6 OF 6

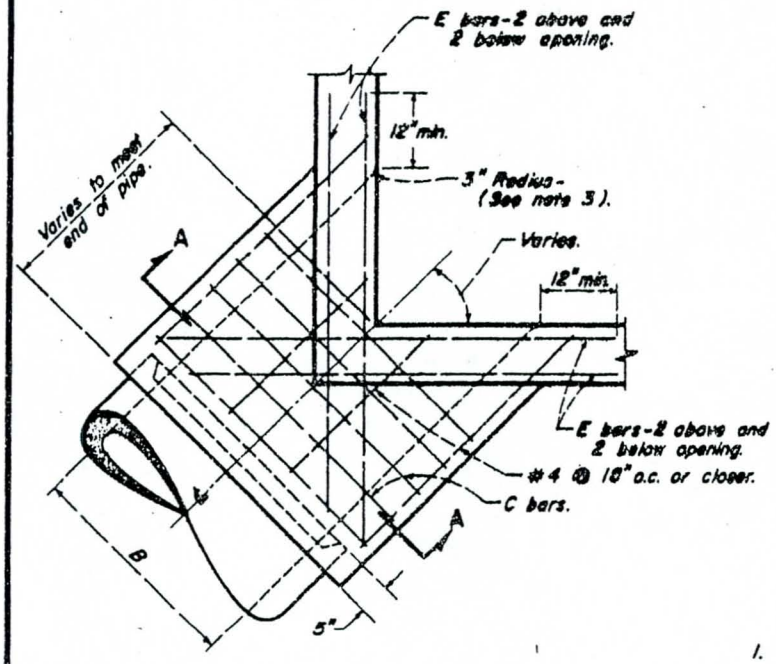

PLAN

CORNER CONNECTION

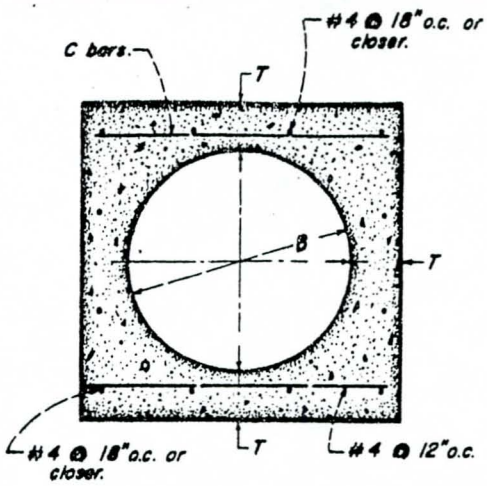

SECTION A-A

NOTES

1. Reinforcing steel, per Std. Dwg. 2-D171, shall be 1½" clear from face of concrete unless otherwise shown.
2. Reinforcing steel for inside face of catch basin wall shall be cut at center of opening and bent into walls of monolithic connection. Reinforcing steel for outside face of catch basin wall shall be cut 2" clear of opening.
3. Connection shall be poured monolithic with catch basin. The rounded edge of outlet shall be constructed by pouring concrete against a curved form with a radius of 3".
4. Floor of structure shall be steel-troweled to spring line.
5. Connections shall be constructed when:
   (a). Pipes, 12 inches through 72 inches in diameter, inlet or outlet through corner of catch basin.
   (b). Angle A, for pipes 24 inches through 30 inches in diameter, is 70° or less.
   △ (c). Pipes, 15 inches through 72 inches in diameter, inlet or outlet through any wall of catch basin ▲ if the connector pipe does not extend to the wall per the applicable catch basin standard.

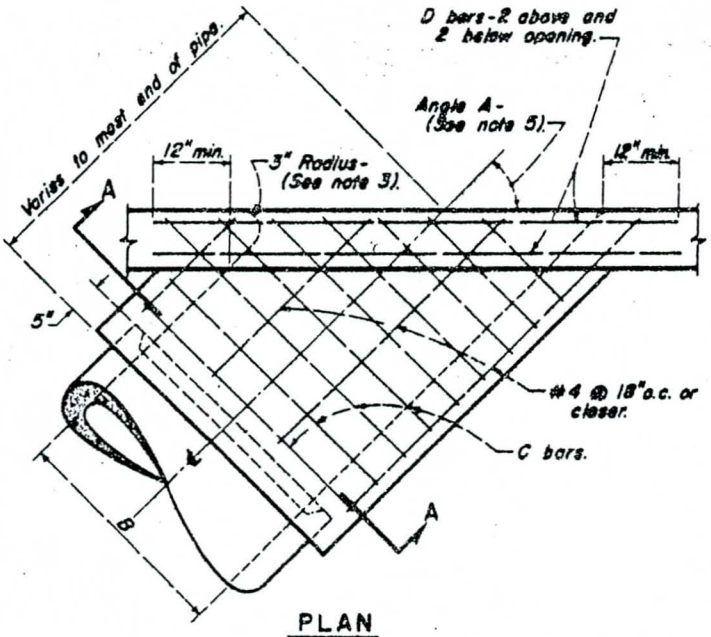

PLAN

SIDE CONNECTION

B	T	C bars	D & E bars
12"	4"	#4 @ 6" o.c.	#5
15"	4¼"		
18"	4½"		
21"	5"		
24"	5¼"		
27"	5½"		
30"	6"		
33"	6¼"		
36"	6½"		
39"	7"		

B	T	C bars	D & E bars
42"	7½"	#5 @ 6" o.c.	#6
45"	7¾"		
48"	8"		
51"	8¼"		
54"	8½"		
57"	9¼"		
60"	9½"		
63"	10"		
66"	10¼"		
69"	10¾"		
72"	11"		

REVISIONS

MARK	DATE	DESCRIPTION
△	5-7-68	Revised Note 5(c)
△	1-14-71	Revised Note 5(c)

DRAWN BY R.J.P.
TRACED BY R.J.P.
CHECKED BY
RECOMMENDED BY
DIVISION ENGINEER (DESIGN)
SUBMITTED BY C.M.C.
SUBMITTED BY

LOS ANGELES COUNTY FLOOD CONTROL DISTRICT

CONNECTION TO CATCH BASIN FOR PIPES 12 INCHES THROUGH 72 INCHES

APPROVED BY 3/22/72
CHIEF ENGINEER

SCALE	DATE	NO. 2-D224
NONE	MAR. 1966	SHEET 1 OF 1

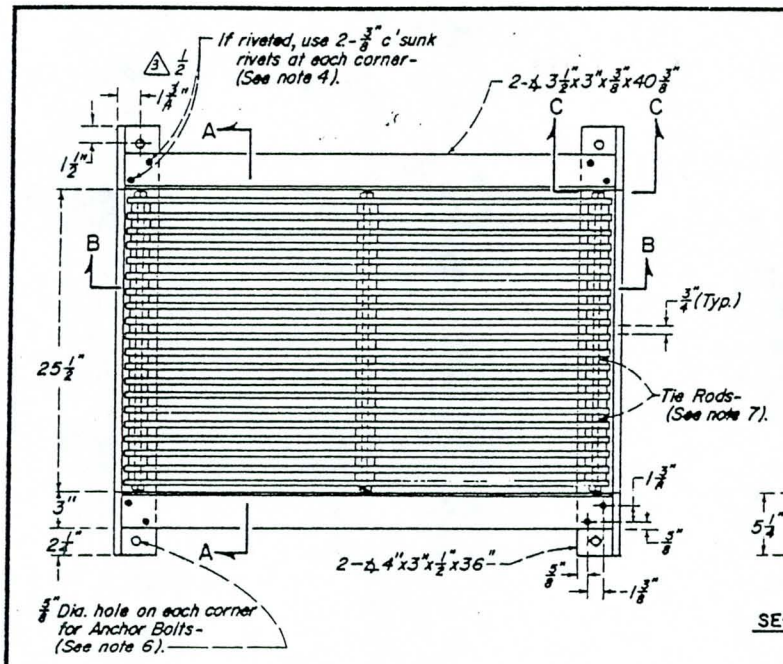

PLAN △1

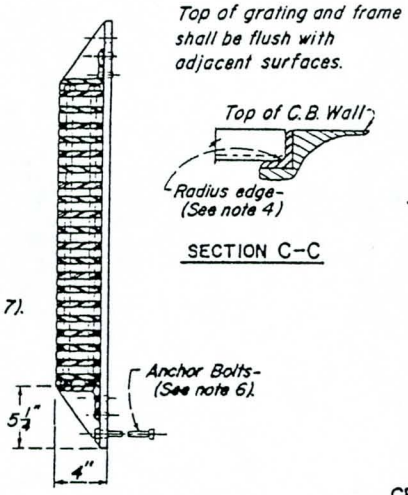

SECTION A-A △1

SECTION C-C

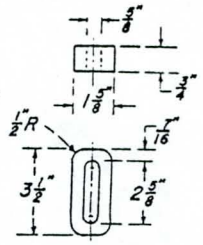

END SPACER

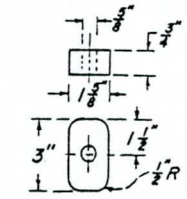

CENTER SPACER

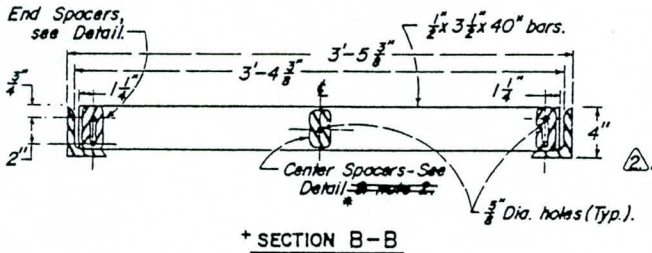

+ SECTION B-B

NOTES

△2 △1 1. Center Support Assembly shall be used when two or more gratings are specified for Catch Basins No. 4, 5, 6 or 7. Use 5"-18.9 # (H) Beam 36" long for Catch Basins No. 4 & 5, 44" long for Catch Basin No. 7, ~~Use 6 WF 20~~ and 64" long for Catch Basin No. 6. △5 If the front to back dimension of the catch basin is varied, the length of the center support beam shall be varied accordingly.

*△ 2. DELETED

3. All exposed metal parts shall be galvanized. Welding, machining, & drilling shall be done before galvanizing. All dimensions are finished dimensions & include galvanizing.

4. Frame may be riveted or welded. Frame & Grating shall be tested for accuracy of fit & shall be marked in sets before delivery.

5. Bolt holes shall be 5/8" Dia. unless otherwise specified. Bolts (not rivets or welds) shall be used to join two or more frames to (H) beam. □

△3 6. Anchor Bolts shall be ½" Dia. x 8" with square or hexagonal head & nut.

7. Tie Rods shall be ½" Dia. x 25 3/8", threaded ¾" on bolt ends. Use one, ½" Dia. square head nut each end.

+ 8. All parts shall be of structural grade steel, except spacers, which shall be either cast iron or steel.

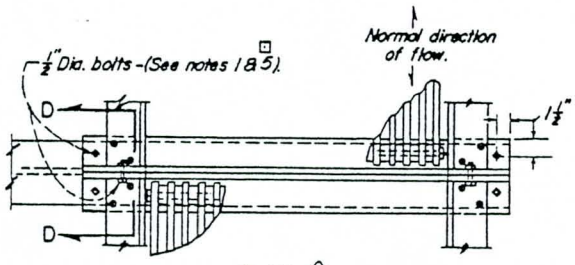

PLAN △1

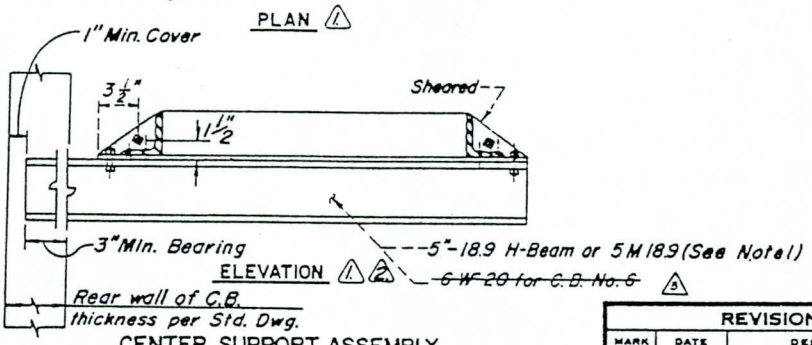

ELEVATION △1 △2

CENTER SUPPORT ASSEMBLY

SECTION D-D

SUPERSEDES STD. DWG. NO. 2-D106

REVISIONS		
MARK	DATE	DESCRIPTION
+	5-'56	Revised
△	11-'57	Revised
*	12-'57	Note 2, DELETED
□	10-'58	Revised
△1	5-9-68	Added
△2	6-19-69	Changed center support Assy. Detail
△3	11-16-73	Revised

LOS ANGELES COUNTY FLOOD CONTROL DISTRICT

FRAME & GRATING FOR CATCH BASINS

DRAWN BY R.J.P. | DESIGNED BY C.M.C. | APPROVED BY 5/7/82 CHIEF ENGINEER

TRACED BY R.J.P. | SUBMITTED BY

CHECKED BY W.H.E.D. | RECOMMENDED BY DIVISION ENGINEER (Design)

SCALE NONE | DATE MAY 1956 | NO. 2-D227 | SHEET 1 OF 1

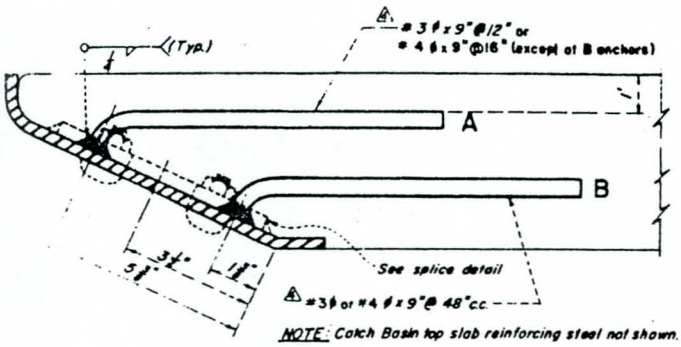

NOTE: Catch Basin top slab reinforcing steel not shown.

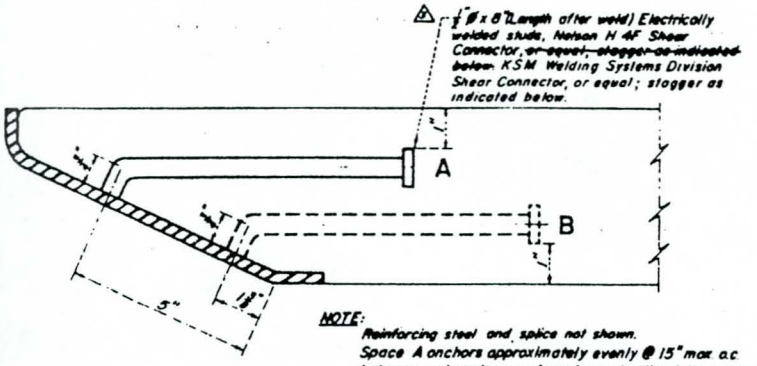

NOTE:
Reinforcing steel and splice not shown.
Space A anchors approximately evenly @ 15" max. o.c. between end anchors and anchors at splice joints except omit at B anchor location. Space B anchors at approximately 45" max. between end anchors.

ALTERNATE METHODS FOR FACE PLATE ANCHORAGE

NOTES

1. Support bolt angle "d" shall vary to conform with batter of adjoining curb.
2. Protection bar shall be installed, and support bolts spaced, according to Standard Drawing 2-D175.
3. Support bolts shall be equal in length to Curb Face +4"± for all curb batters.
4. All exposed metal parts shall be galvanized after fabrication.
5. Protection Bar Spacing: Protection bar(s) shall be installed when the minimum clear opening of the catch basin exceeds 6." Bar(s) shall be placed such that no minimum clear opening exceeds 6."
   (A) When one bar is required, "S" shall be 6½"; however, this shall be reduced, if necessary, so that the center of the protection bar is not less than 2½" from the rolled plate.
   (B) When two or more bars are required "S" shall be 6½" with remaining bars spaced @ 6½" c.c. The spacing of the top bar shall be reduced, if necessary, so that the center of the bar is not less than 2½" from the rolled plate.
6. Where catch basins are to be constructed on curves, the maximum chord length for face plate shall be such that the maximum dimension from said chord (measured perpendicular thereto) to the true curve will not exceed one inch. Where more than one chord is required, chord lengths shall be equal.
7. When length of Face Plate is between 22' and 43', two sections may be used. When length exceeds 43', three sections may be used. Sections shall be spliced according to the Splice Detail. Splices shall be placed one foot from support bolt (see Std. Dwg. No. 2-D175)
8. Length of Face Plate is W+12" for all catch basins except the driveway Catch Basin No. 8 (See Dwg. No. 2-D249.1 and .2 for details).
9. Curb Face shall be as required by Dwgs. Nos. 2-D88, 2-D248, 2-D415, or as shown on the general plan.
10. SPACING OF ALL ANCHORAGE:
    a. Set end anchors 3" from ends of face plate
    b. Place one A anchor at each side of any and all splice joints and within 6" thereof.

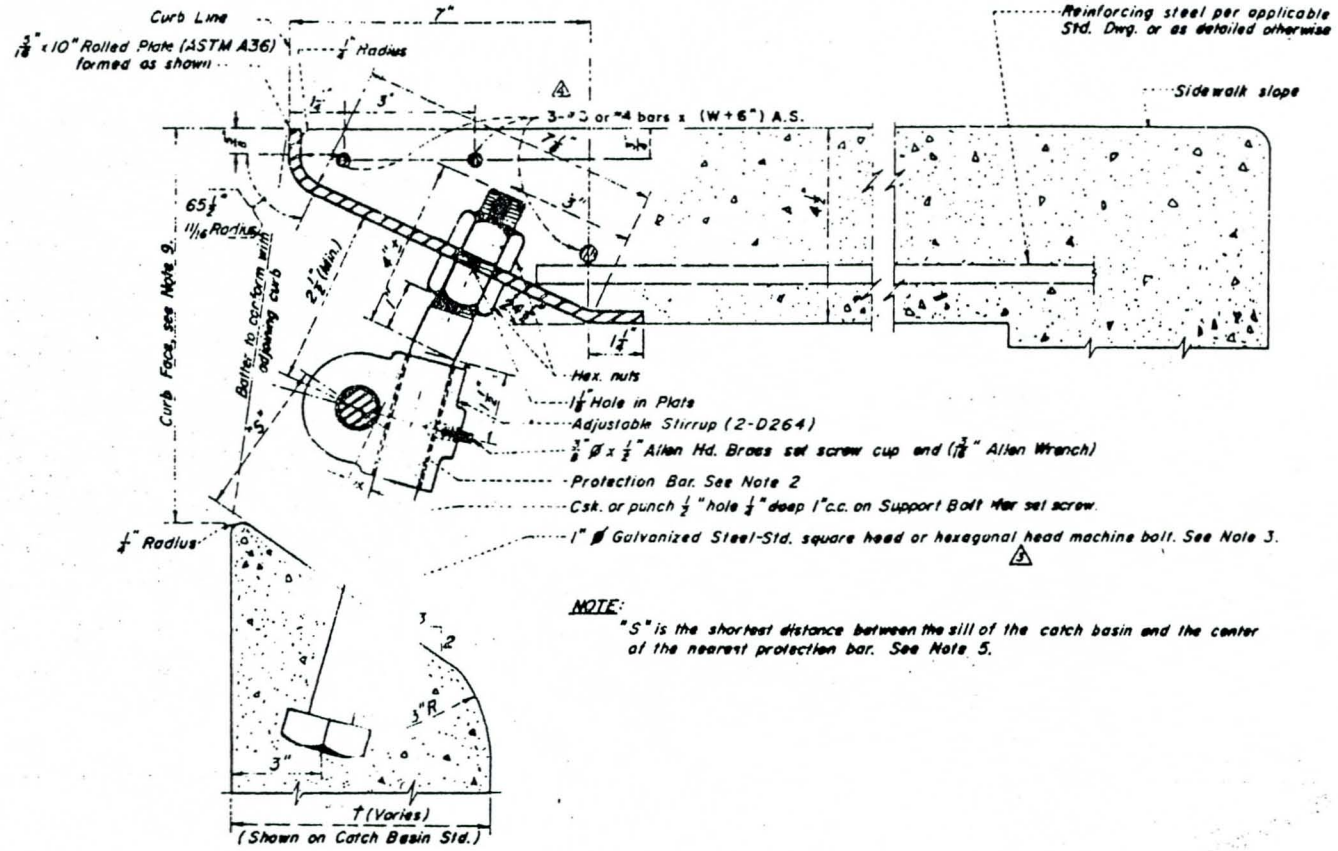

NOTE:
"S" is the shortest distance between the sill of the catch basin and the center of the nearest protection bar. See Note 5.

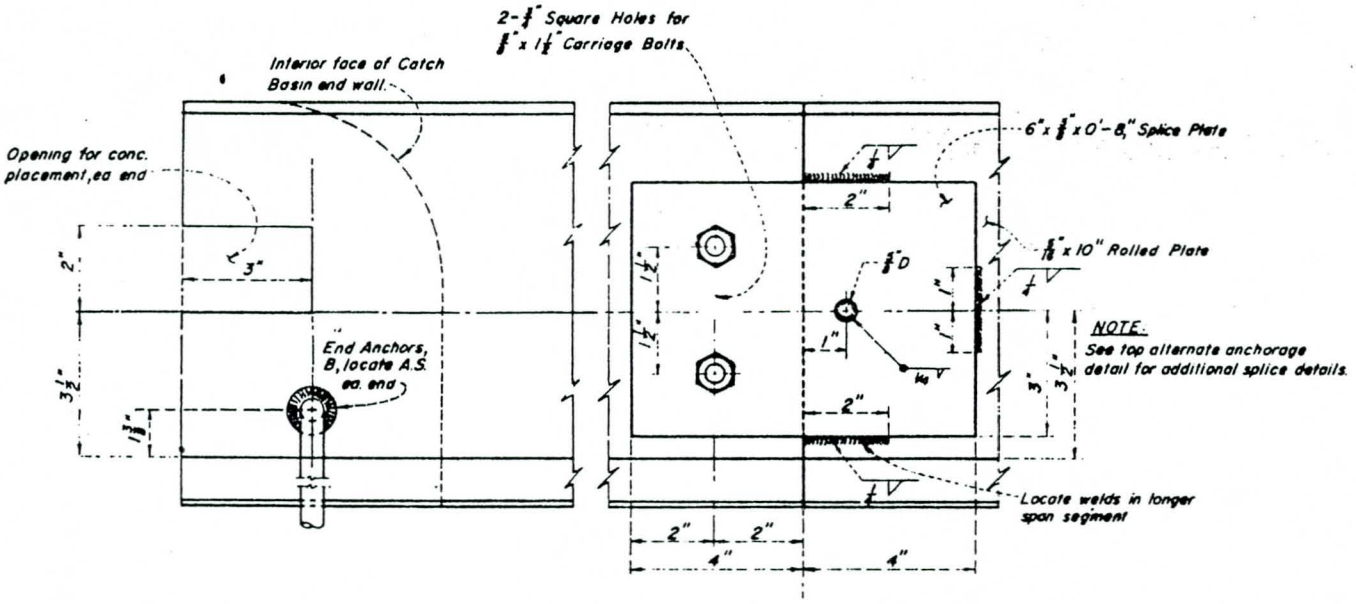

NOTE:
See top alternate anchorage detail for additional splice details.

△1 △2 FACE PLATE END & SPLICE DETAILS

SUPERSEDES DRAWING OF SAME NUMBER DATED 4-1-65

DRAWN BY	REVISIONS		
G.R.E.	MARK	DATE	DESCRIPTION
CHECKED BY H.S.M.	△1	6-25-68	Revised Detail
	△2	2-25-69	Revised Detail
DESIGNED BY C.M.C.-R.J.S.	△3	11-16-73	Revised Detail
	△4	2 1 74	#4 bar alternatives
SUBMITTED BY C.W.H.			

LOS ANGELES COUNTY FLOOD CONTROL DISTRICT

DETAIL OF CATCH BASIN OPENING

RECOMMENDED BY C. F. Schelling DIVISION ENGINEER HYDR.

APPROVAL RECOMMENDED BY William W. Rinner ASS'T CHIEF DEPUTY ENGINEER

APPROVED BY Walter J. Wood Jr. 7/1/65 CHIEF ENGINEER

SCALE	DATE	DWG. NO. 2-D232
NONE	5-15-'68	SHEET 1 OF 1

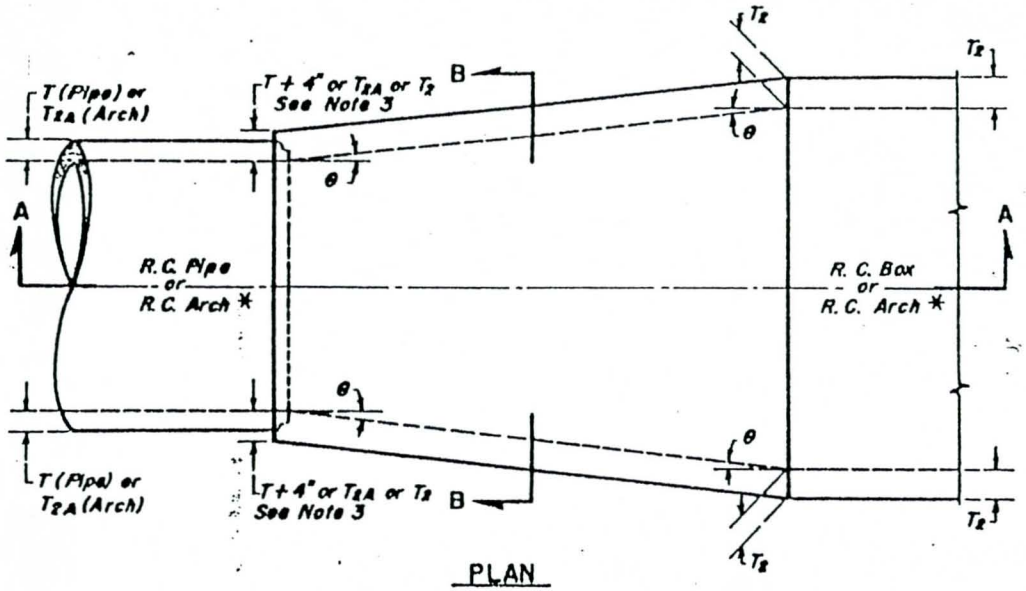

PLAN

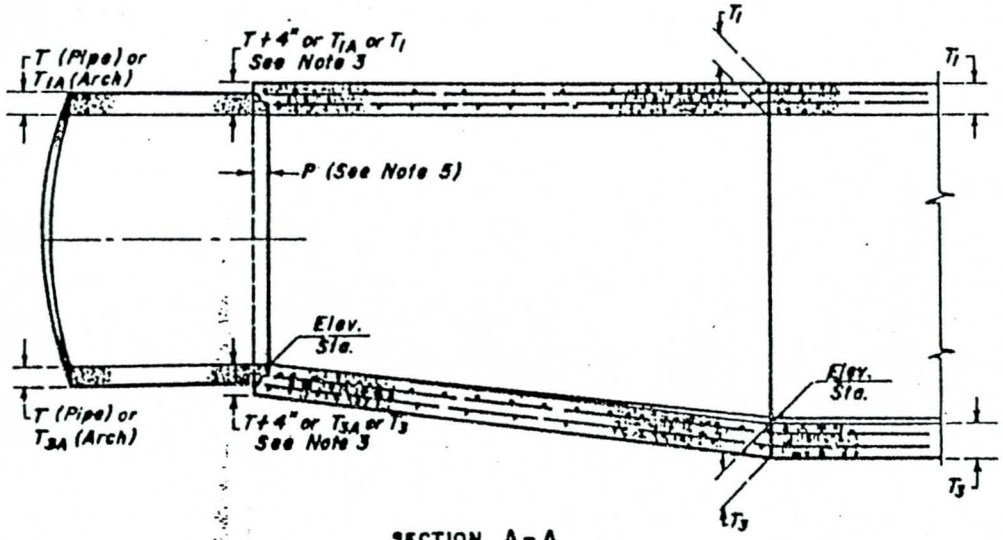

SECTION A-A

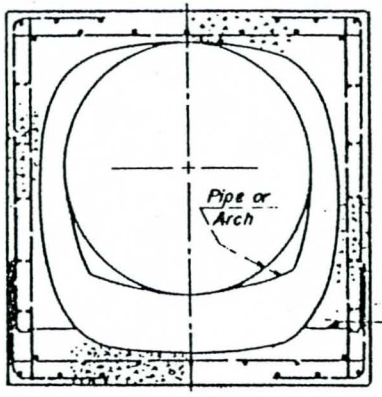

SECTION B-B

Optional construction joint:
Box or arch to pipe – Use const. jt. of box or arch.
Box to arch – Use const. jt. of box.

NOTES

1. The horizontal angle of divergence or convergence, θ, shall not exceed 5° 45'.
2. Reinforcing steel bar sizes, spacing, pattern and cover over the steel shall be as follows:
   Box to pipe and box to arch — that of box section.
   Arch to pipe — that of arch section.
   Arch to arch — that of arch section having the thicker walls.
   The bar lengths shall vary uniformly throughout the transition.
3. The concrete thickness shall be as follows:
   Box to pipe and arch to pipe — that of arch or box section unless the wall thickness of the pipe plus 4 inches is greater, in which case the concrete thickness shall vary uniformly from that of the arch or box section to that of the pipe wall plus 4 inches.
   Box to arch and arch to arch — that of the adjoining box or arch section at each end of the transition and shall vary uniformly between the two ends.
4. The interior surface shall be smooth and vary uniformly between the two adjoining sections.
5. At pipe juncture, embedment P shall be 5 inches for pipe sizes of 96 inches or less, and 8 inches for pipe sizes over 96 inches.
6. f'_c = 3000 p.s.i. at 28 days.
7. Keyed construction joints of the same dimensions as those of the box or arch section may be carried through the transition structure at the contractor's option. See Sec. B-B above.
8. The transition structure shall be constructed in accordance with the general structural notes applying to box or arch structures shown on the project drawings.

* Arch may have a horseshoe-shaped, circular, elliptical or similar cross-section.

SUPERSEDES STD. DWG. NO. 2-D185

REVISIONS		
MARK	DATE	DESCRIPTION

LOS ANGELES COUNTY FLOOD CONTROL DISTRICT

TRANSITION STRUCTURE NO. 1

PLAN & SECTIONS

DRAWN BY J.W.H. DESIGNED BY C.W.H.
TRACED BY J.W.H.
CHECKED BY C.W.H. PUBLISHED BY W.H.E.D.
RECOMMENDED BY
DESIGN ENGINEER (Design)
APPROVED BY H.E. Hedgen 2/21/63
CHIEF ENGINEER

SCALE NONE | DATE MAR. '57 | NO. 2-D235 | SHEET 1 OF 1

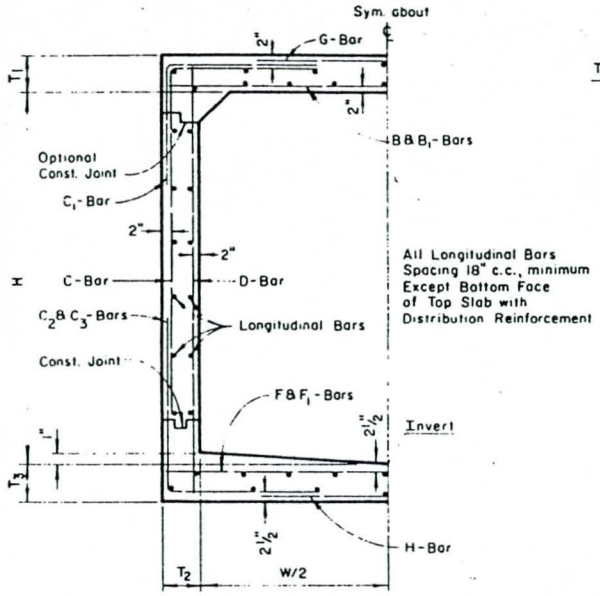

TYPICAL R.C. BOX SECTION

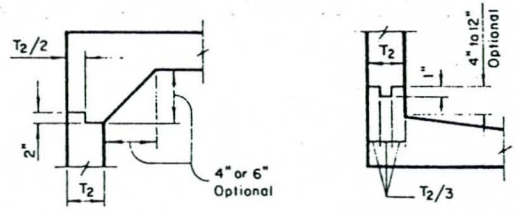

TOP OF WALL

BASE OF WALL

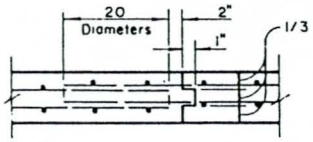

TRANSVERSE JOINT

CONSTRUCTION JOINT DETAILS

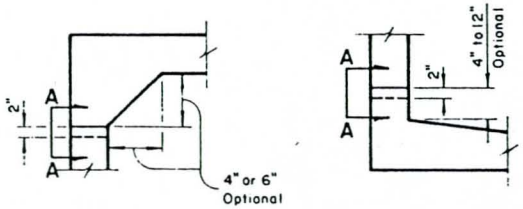

TOP OF WALL

BASE OF WALL

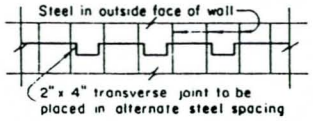

SECTION A-A

CONSTRUCTION JOINT DETAILS FOR BOXES JACKED IN PLACE

DESIGN NOTES

1. THE FOLLOWING NOTES APPLY TO STANDARD DRAWINGS 2-D 236.1 TO 2-D 236.14. REFER TO L.A.C.F.C.D. STRUCTURAL DESIGN MANUAL FOR ADDITIONAL NOTES.
2. DIMENSIONS FROM FACE OF CONCRETE TO STEEL ARE TO CENTER OF BAR AND SHALL BE TWO INCHES UNLESS OTHERWISE SHOWN.
3. CONCRETE DIMENSIONS SHALL BE MEASURED HORIZONTALLY OR VERTICALLY ON THE PROFILE, AND PARALLEL TO OR AT RIGHT ANGLES (OR RADIALLY) TO CENTER LINE OF CONDUIT ON THE PLAN EXCEPT AS OTHERWISE SHOWN.
4. NO SPLICES IN TRANSVERSE STEEL REINFORCEMENT WILL BE PERMITTED OTHER THAN SHOWN ON THE DRAWING WITHOUT APPROVAL OF THE ENGINEER.
5. THE TRANSVERSE REINFORCING STEEL SHALL TERMINATE ONE AND ONE-HALF INCHES FROM THE CONCRETE SURFACES UNLESS OTHERWISE SHOWN ON THE STRUCTURAL DETAILS.
6. D-BARS MAY BE SPLICED 20 DIAMETERS AT THE LOWER CONSTRUCTION JOINT.
7. IN ALL SECTIONS LAP C AND C_2 BARS. THE VERTICAL LENGTH OF THE C AND C_2 BARS HAS BEEN CALCULATED FOR A FOUR-INCH STARTER WALL. IF THE HEIGHT OF THE STARTER WALL IS VARIED, THE VERTICAL LENGTH OF THE C AND C_2 BARS SHALL BE VARIED CORRESPONDINGLY SO AS TO MAINTAIN A 30 DIAMETER LAP BETWEEN THE TWO BARS. THE LAPS SHALL BE BASED ON THE SMALLER BAR. THIS ALSO APPLIES TO C_1 AND C_3 BARS IF VERTICAL LENGTH OF C_1 = C. THE C_1 BAR SHALL LAP 30 DIAMETERS WITH THE C_3 BAR.
8. ALL LONGITUDINAL BARS SHALL BE NO. 4 BARS. SPACING SHALL BE 18 INCHES UNLESS OTHERWISE SHOWN. BARS IN TOP AND BOTTOM SLABS SHALL BE SPACED SYMMETRICALLY ABOUT THE CENTER LINE. BARS IN WALLS SHALL BE SPACED SYMMETRICALLY ABOUT MID-HEIGHT OF THE WALLS.
9. CONCRETE QUANTITIES ARE BASED ON A SIX-BY-SIX INCH FILLET AND THE STEEL QUANTITIES DO NOT INCLUDE ANY OPTIONAL SPLICE.
10. INVERT THICKNESS IS CALCULATED FOR A BAR COVER OF TWO AND ONE-HALF INCHES AT THE CENTER LINE. IT SHOULD BE INCREASED FOR HIGH VELOCITIES, SALT WATER, INDUSTRIAL WASTES, OR HARMFUL GROUNDWATER (USUALLY ONE-HALF INCH FOR EACH CONDITION).

DESIGN DATA

LIVE LOAD:
H20-S16-44 unless otherwise noted

DEAD LOAD:
Earth load per Marston's formula: w = 110 p.c.f.
Ku = Ku' = 0.150
Bd = Outside width of box plus 3 feet
Side earth 37 p.s.f. per foot of depth
Internal water pressure: 62.4 p.s.f. per foot of depth
Weight of concrete: 150 p.c.f.

ALLOWABLE STRESSES:
f_c' = 4000 p.s.i. at 28 days
f_c = 1800 p.s.i.
f_s = 24,000 p.s.i.
n = 8
shear and bond stresses per A.C.I. 318-63

SUPERSEDES DWG. NO. 2-D236.1 DATED APR. '57

LOS ANGELES COUNTY FLOOD CONTROL DISTRICT

DESIGN TABLE FOR R.C. BOX CONDUITS

RECOMMENDED BY: B. Smithe, DIVISION ENGINEER (DESIGN)
APPROVAL RECOMMENDED BY: C. Kisgoreo, ASS'T CHIEF DEPUTY ENGINEER
APPROVED BY: A. E. Bennington 1/5/70, CHIEF ENGINEER

SCALE	DATE	DWG. NO. 2-D236.1
NONE	1-1-71	SHEET 1 OF 14

DRAWN BY	REVISIONS		
G.D.M.	MARK	DATE	DESCRIPTION
CHECKED BY R.J.S.			
DESIGNED BY V.C.M.			
SUBMITTED BY C.W.H.			

BOX SIZE: W = 5'-10", H = 7'-0" DIAMETER OF HYDRAULICALLY EQUIVALENT PIPE = 84"

		DEPTH OF COVER IN FEET																			
		1	2	2'-11"	4	5	6	7	8	9	10	11	12	13	14	15	16	17	18	19	20
TOP SLAB THICKNESS, t_1		6.50	6.75	6.75	6.50	6.50	6.50	6.50	6.50	6.50	6.50	6.50	6.75	7.25	7.50	7.75	8.00	8.25	8.50	8.75	9.00
SIDE WALL THICKNESS, t_2		8.00	8.00	8.00	8.00	8.00	8.00	8.00	8.00	8.00	8.00	8.00	8.00	8.00	8.00	8.00	8.00	8.00	8.00	8.00	8.00
BOTTOM SLAB THICKNESS, t_3		7.00	7.00	7.00	7.00	7.00	7.00	7.00	7.00	7.25	7.50	7.50	7.75	8.00	8.25	8.75	9.00	9.25	9.50	9.75	10.00
TRANSVERSE REINFORCEMENT																					
B BARS	BAR NO. & SPACING	5 @ 18"	7 @ 10"	6 @ 15"	4 @ 17"	4 @ 13"	5 @ 19"	4 @ 11"	6 @ 20"	6 @ 16"	6 @ 15"	6 @ 16"	6 @ 15"	7 @ 18"	7 @ 17"	7 @ 17"	8 @ 20"	7 @ 16"	8 @ 19"	8 @ 18"	8 @ 18"
	LENGTH, h	6'-11"	6'-11"	6'-11"	6'-11"	6'-11"	6'-11"	6'-11"	6'-11"	6'-11"	6'-11"	6'-11"	6'-11"	6'-11"	6'-11"	6'-11"	6'-11"	6'-11"	6'-11"	6'-11"	6'-11"
B_1 BARS	BAR NO. & SPACING	8 @ 18"		6 @ 15"	5 @ 17"	4 @ 13"	5 @ 19"	4 @ 11"	5 @ 20"	4 @ 16"	4 @ 15"	4 @ 16"	4 @ 15"	4 @ 18"	4 @ 17"	4 @ 17"	4 @ 20"	4 @ 16"	4 @ 19"	4 @ 18"	4 @ 18"
	LENGTH, h	6'-11"		6'-11"	5'-1.5"	4'-9"	4'-8.5"	4'-7.5"	4'-4"	3'-11"	3'-11"	3'-11.5"	3'-11.5"	3'-9.5"	3'-9"	4'-0"	3'-8"	4'-1"	3'-10"	3'-8.5"	3'-11"
C BARS	BAR NO. & SPACING	4 @ 14"	4 @ 14"	4 @ 14"	4 @ 10"	4 @ 10"	4 @ 9"	4 @ 14"	4 @ 14"	4 @ 14"	4 @ 13"	4 @ 14"	4 @ 13"	4 @ 14"	4 @ 14"	4 @ 14"	4 @ 14"	4 @ 14"	4 @ 14"	4 @ 14"	4 @ 14"
	HORIZ. LENGTH, h	3'-2"	3'-2"	3'-2"	3'-2"	3'-2"	3'-2"	3'-2"	3'-2"	3'-2"	3'-2"	3'-2"	3'-2"	3'-2"	3'-2"	3'-2"	3'-2"	3'-2"	3'-2"	3'-2"	3'-2"
	VERT. LENGTH, v	6'-11.5"	7'-0"	7'-0"	6'-11.5"	6'-11.5"	6'-11.5"	6'-11.5"	6'-11.5"	6'-11.5"	6'-11.5"	6'-11.5"	7'-0"	7'-0.5"	7'-0.5"	7'-1"	7'-1"	7'-1.5"	7'-1.5"	7'-2"	7'-2"
C_1 BARS	BAR NO. & SPACING	4 @ 14	4 @ 14	4 @ 14"				4 @ 14"	4 @ 14"	4 @ 14"	4 @ 13"	4 @ 14"	4 @ 13"	4 @ 14"	4 @ 14"	4 @ 14"	4 @ 14"	4 @ 14"	4 @ 14"	4 @ 14"	4 @ 14"
	HORIZ. LENGTH, h	1'-4.5"	1'-4"	1'-4"				1'-2"	1'-2.5"	1'-2.5"	1'-3"	1'-3"	1'-3"	1'-3.5"	1'-3.5"	1'-3.5"	1'-4"	1'-4"	1'-4"	1'-4.5"	1'-4.5"
	VERT. LENGTH, v	2'-8"	2'-4"	2'-1"				1'-0"	1'-1.5"	1'-3"	1'-3"	1'-3"	1'-3"	1'-5"	1'-5"	1'-5.5"	1'-6"	1'-6.5"	1'-5"	1'-5.5"	1'-5.5"
C_2 BARS	BAR NO. & SPACING	4 @ 14"	5 @ 14"	5 @ 14"	4 @ 10"	5 @ 10"	4 @ 9"	4 @ 14"	4 @ 14"	4 @ 14"	4 @ 13"	4 @ 14"	4 @ 13"	4 @ 14"	4 @ 14"	4 @ 14"	4 @ 14"	4 @ 14"	4 @ 14"	4 @ 14"	4 @ 14"
	HORIZ. LENGTH, h	2'-10.5"	2'-10.5"	2'-10.5"	2'-10.5"	2'-10.5"	2'-10.5"	2'-10.5"	2'-10.5"	2'-10.5"	3'-1"	3'-1"	3'-3"	3'-3.5"	3'-2"	3'-2"	3'-2"	3'-2"	3'-2"	3'-2"	3'-2"
	VERT. LENGTH, v	2'-0"	2'-0"	2'-0"	2'-0"	2'-0"	2'-0"	2'-0"	2'-0"	2'-0.5"	2'-0.5"	2'-0.5"	2'-1"	2'-1"	2'-1.5"	2'-2"	2'-2"	2'-2.5"	2'-2.5"	2'-3"	2'-3"
C_3 BARS	BAR NO. & SPACING							4 @ 14"	4 @ 14"	4 @ 14"	4 @ 13"	4 @ 14"	4 @ 13"	4 @ 14"	4 @ 14"	4 @ 14"	4 @ 14"	4 @ 14"	4 @ 14"	4 @ 14"	4 @ 14"
	HORIZ. LENGTH, h							1'-2"	1'-2.5"	1'-3"	1'-3"	1'-3"	1'-3"	1'-3.5"	1'-3.5"	1'-4"	1'-4"	1'-4.5"	1'-4.5"	1'-4.5"	1'-4.5"
	VERT. LENGTH, v							2'-0"	2'-0"	2'-0.5"	2'-0.5"	2'-0.5"	2'-1"	2'-1"	2'-1.5"	2'-2"	2'-2"	2'-2.5"	2'-2.5"	2'-3"	2'-3"
D BARS	BAR NO. & SPACING	4 @ 18"	4 @ 18"	4 @ 18"	4 @ 18"	4 @ 18"	4 @ 18"	4 @ 18"	4 @ 18"	4 @ 18"	4 @ 18"	4 @ 18"	4 @ 18"	4 @ 18"	4 @ 18"	4 @ 18"	4 @ 18"	4 @ 18"	4 @ 18"	4 @ 18"	4 @ 18"
	LENGTH, v	7'-10.5"	7'-10.5"	7'-10.5"	7'-10.5"	7'-10.5"	7'-10.5"	7'-10.5"	7'-10.5"	7'-10.5"	7'-11"	7'-11"	7'-11.5"	8'-0"	8'-1"	8'-1.5"	8'-2"	8'-2.5"	8'-3"	8'-3.5"	8'-4"
F BARS	BAR NO. & SPACING	5 @ 20"	5 @ 18"	5 @ 20"	4 @ 16"	5 @ 18"	6 @ 20"	6 @ 16"	7 @ 20"	7 @ 17"	8 @ 20"	7 @ 17"	8 @ 20"	7 @ 16"	8 @ 19"	8 @ 18"	8 @ 18"	8 @ 17"	8 @ 17"	9 @ 20"	9 @ 20"
	LENGTH, h	6'-11"	6'-11"	6'-11"	6'-11"	6'-11"	6'-11"	6'-11"	6'-11"	6'-11"	6'-11"	6'-11"	6'-11"	6'-11"	6'-11"	6'-11"	6'-11"	6'-11"	6'-11"	6'-11"	6'-11"
F_1 BARS	BAR NO. & SPACING	4 @ 20"	4 @ 18"	5 @ 20"	5 @ 16"	5 @ 18"	5 @ 20"	4 @ 16"	5 @ 20"	4 @ 17"	4 @ 20"	4 @ 17"	4 @ 20"	4 @ 16"	4 @ 19"	4 @ 18"	4 @ 18"	4 @ 17"	4 @ 17"	4 @ 20"	4 @ 20"
	LENGTH, h	5'-0.5"	4'-11.5"	5'-3.5"	5'-5.5"	5'-1"	4'-7.5"	4'-3"	4'-2.5"	3'-11"	3'-7"	4'-0.5"	3'-8.5"	4'-2.5"	3'-11.5"	3'-11"	4'-1.5"	4'-0"	4'-2"	3'-11"	4'-1"
G BARS	BAR NO. & SPACING	4 @ 14"	4 @ 14"	4 @ 14"	4 @ 10"	4 @ 10"	4 @ 9"	4 @ 14"	4 @ 14"	4 @ 14"	4 @ 13"	4 @ 14"	4 @ 13"	4 @ 14"	4 @ 14"	4 @ 14"	4 @ 14"	4 @ 14"	4 @ 14"	4 @ 14"	4 @ 14"
	LENGTH, h	2'-11"	2'-11"	2'-11"	2'-11"	2'-11"	2'-11"	2'-11"	2'-11"	2'-11"	2'-11"	2'-11"	2'-11"	2'-11"	2'-11"	2'-11"	2'-11"	2'-11"	2'-11"	2'-11"	2'-11"
H BARS	BAR NO. & SPACING														4 @ 14"	4 @ 14"	4 @ 14"	4 @ 14"	4 @ 14"	4 @ 14"	4 @ 14"
	LENGTH, h														2'-11"	2'-11"	2'-11"	2'-11"	2'-11"	2'-11"	2'-11"
LONGITUDINAL REINFORCEMENT																					
NO. 4 LONG. BARS	NUMBER IN TOP SLAB	15	15	14	12	12	12	12	12	12	12	12	12	12	12	12	12	12	12	12	12
	NUMBER IN BOTTOM SLAB	12	12	12	12	12	12	12	12	12	14	14	14	14	12	12	12	12	12	12	12
	NUMBER IN WALLS	16	16	16	16	16	16	16	16	16	16	16	16	16	16	16	16	16	16	16	16
	TOTAL NUMBER	43	43	42	40	40	40	40	40	40	42	42	42	42	40	40	40	40	40	40	40
CONCRETE: CU. YDS. PER LIN. FT.		0.66	0.67	0.67	0.66	0.66	0.66	0.66	0.66	0.67	0.67	0.67	0.68	0.70	0.71	0.73	0.74	0.75	0.76	0.77	0.78
STEEL: LBS. PER LIN. FT.		82.6	85.8	85.2	74.8	80.0	79.8	76.9	78.8	70.7	85.6	82.4	86.0	85.3	87.0	88.1	89.0	90.1	90.8	92.3	92.6

HYDRAULIC PROPERTIES (BOX)

n = .013

Area = 40.3 sq. ft.

$K = Q/S^{\frac{1}{2}} = \frac{1.486}{n} AR^{\frac{2}{3}} = 6{,}357$

DRAWN BY	REVISIONS		
G.D.M.	MARK	DATE	DESCRIPTION
CHECKED BY W.C.			
DESIGNED BY V.C.M.			
SUBMITTED BY C.W.H.			

SUPERSEDES DWG NO 2-D236.2 DATED APR '57

LOS ANGELES COUNTY
FLOOD CONTROL DISTRICT

DESIGN TABLE
FOR
R. C. BOX CONDUITS

RECOMMENDED BY: D. J. Milne, DIVISION ENGINEER (DESIGN)

APPROVAL RECOMMENDED BY: C. Magoon, ASS'T CHIEF DEPUTY ENGINEER

APPROVED BY: A. E. Barrington 1/25/70, CHIEF ENGINEER

SCALE	DATE	DWG. NO. 2-D236.2
NONE	1-1-71	SHEET 2 OF 14

BOX SIZE: W = 6'-1" , H = 7'-3" DIAMETER OF HYDRAULICALLY EQUIVALENT PIPE = 87"

		DEPTH OF COVER IN FEET																			
		1	2	2'-11"	4	5	6	7	8	9	10	11	12	13	14	15	16	17	18	19	20
TOP SLAB THICKNESS, t_1		6.50	6.75	6.75	6.50	6.50	6.50	6.50	6.50	6.50	6.75	6.50	7.00	7.25	7.75	8.00	8.25	8.50	8.75	9.00	9.25
SIDE WALL THICKNESS, t_2		8.00	8.00	8.00	8.00	8.00	8.00	8.00	8.00	8.00	8.00	8.00	8.00	8.00	8.00	8.00	8.00	8.00	8.00	8.00	8.00
BOTTOM SLAB THICKNESS, t_3		7.00	7.00	7.00	7.00	7.00	7.00	7.00	7.00	7.25	7.75	7.75	8.00	8.25	8.50	8.75	9.25	9.50	9.75	10.00	10.25
TRANSVERSE REINFORCEMENT																					
B BARS	BAR NO. & SPACING	6 @ 14"	4 @ 19"	9 @ 16"	5 @ 20"	5 @ 19"	5 @ 18"	6 @ 20"	6 @ 16"	6 @ 15"	7 @ 18"	6 @ 15"	7 @ 18"	7 @ 17"	6 @ 13"	8 @ 20"	8 @ 19"	7 @ 15"	8 @ 18"	7 @ 14"	8 @ 17"
	LENGTH, h	7'-2"	7'-2"	7'-2"	7'-2"	7'-2"	7'-2"	7'-2"	7'-2"	7'-2"	7'-2"	7'-2"	7'-2"	7'-2"	7'-2"	7'-2"	7'-2"	7'-2"	7'-2"	7'-2"	7'-2"
B_1 BARS	BAR NO. & SPACING	6 @ 14"	9 @ 19"		5 @ 20"	5 @ 19"	5 @ 18"	5 @ 20"	4 @ 16"	4 @ 15"	4 @ 18"	4 @ 15"	4 @ 18"	4 @ 17"	4 @ 13"	4 @ 20"	4 @ 19"	4 @ 15"	4 @ 18"	4 @ 14"	4 @ 17"
	LENGTH, h	7'-2"	7'-2"		4'-11"	4'-11"	4'-10.5"	4'-5.5"	4'-0.5"	4'-0.5"	3'-10"	4'-0.5"	3'-10.5"	3'-10.5"	4'-3"	3'-10.5"	3'-9.5"	4'-2.5"	3'-11"	4'-2.5"	4'-0"
C BARS	BAR NO. & SPACING	4 @ 14"	4 @ 14"	4 @ 14"	4 @ 9"	4 @ 14"	4 @ 14"	4 @ 14"	4 @ 14"	4 @ 13"	4 @ 13"	4 @ 13"	4 @ 13"	4 @ 14"	4 @ 14"	4 @ 14"	4 @ 14"	4 @ 14"	4 @ 14"	4 @ 14"	4 @ 14"
	HORIZ. LENGTH, h	3'-3"	3'-3"	3'-3"	3'-3"	3'-3"	3'-3"	3'-3"	3'-3"	3'-3"	3'-3"	3'-3"	3'-3"	3'-3"	3'-3"	3'-3"	3'-3"	3'-3"	3'-3"	3'-3"	3'-3"
	VERT. LENGTH, v	7'-2.5"	7'-3"	7'-3"	7'-2.5"	7'-2.5"	7'-2.5"	7'-2.5"	7'-2.5"	7'-2.5"	7'-3"	7'-2.5"	7'-3"	7'-3.5"	7'-4"	7'-4"	7'-4.5"	7'-4.5"	7'-5"	7'-5"	7'-5.5"
C_1 BARS	BAR NO. & SPACING	4 @ 14"	4 @ 14"	4 @ 14"		4 @ 14"	4 @ 14"	4 @ 14"	4 @ 14"	4 @ 13"	4 @ 13"	4 @ 13"	4 @ 13"	4 @ 14"	4 @ 14"	4 @ 14"	4 @ 14"	4 @ 14"	4 @ 14"	4 @ 14"	4 @ 14"
	HORIZ. LENGTH, h	1'-5"	1'-4.5"	1'-4.5"		1'-2"	1'-2.5"	1'-2.5"	1'-3"	1'-3"	1'-3.5"	1'-3"	1'-3.5"	1'-3.5"	1'-4"	1'-4.5"	1'-4.5"	1'-4.5"	1'-5"	1'-5"	1'-5"
	VERT. LENGTH, v	3'-3.5"	2'-10"	2'-6"		0'-11"	1'-1"	1'-2.5"	1'-3.5"	1'-3.5"	1'-4.5"	1'-3.5"	1'-4.5"	1'-5.5"	1'-6"	1'-6.5"	1'-7"	1'-6"	1'-6"	1'-6"	1'-6.5"
C_2 BARS	BAR NO. & SPACING	5 @ 14"	5 @ 14"	5 @ 14"	4 @ 9"	5 @ 14"	4 @ 14"	4 @ 14"	4 @ 14"	4 @ 13"	4 @ 13"	4 @ 13"	4 @ 13"	4 @ 14"	4 @ 14"	4 @ 14"	4 @ 14"	4 @ 14"	4 @ 14"	4 @ 14"	4 @ 14"
	HORIZ. LENGTH, h	3'-0.5"	3'-0.5"	3'-0.5"	3'-0.5"	3'-0.5"	3'-0.5"	3'-0.5"	3'-0.5"	3'-2"	3'-4.5"	3'-5"	3'-3"	3'-3"	3'-3"	3'-3"	3'-3"	3'-3"	3'-3"	3'-3"	3'-3"
	VERT. LENGTH, v	2'-0"	2'-0"	2'-0"	2'-0"	2'-0"	2'-0"	2'-0"	2'-0"	2'-0.5"	2'-1"	2'-1"	2'-1"	2'-1.5"	2'-1.5"	2'-2"	2'-2.5"	2'-2.5"	2'-3"	2'-3"	2'-3.5"
C_3 BARS	BAR NO. & SPACING						4 @ 14"	4 @ 14"	5 @ 14"	4 @ 13"	4 @ 13"	4 @ 13"	4 @ 13"	4 @ 14"	4 @ 14"	4 @ 14"	4 @ 14"	4 @ 14"	4 @ 14"	4 @ 14"	4 @ 14"
	HORIZ. LENGTH, h						1'-2.5"	1'-3"	1'-3.5"	1'-3"	1'-3.5"	1'-3.5"	1'-3.5"	1'-4"	1'-4"	1'-4.5"	1'-4.5"	1'-5"	1'-5"	1'-5"	1'-5.5"
	VERT. LENGTH, v						2'-0"	2'-0"	1'-4"	2'-0.5"	2'-1"	2'-1"	2'-1"	1'-5.5"	1'-6"	1'-6"	1'-6.5"	1'-7"	1'-7"	1'-7.5"	1'-7.5"
D BARS	BAR NO. & SPACING	4 @ 18"	4 @ 18"	4 @ 18"	4 @ 18"	4 @ 18"	4 @ 18"	4 @ 18"	4 @ 18"	4 @ 18"	4 @ 18"	4 @ 18"	4 @ 18"	4 @ 18"	4 @ 18"	4 @ 18"	4 @ 18"	4 @ 18"	4 @ 18"	4 @ 18"	4 @ 18"
	LENGTH, v	8'-1.5"	8'-1.5"	8'-1.5"	8'-1.5"	8'-1.5"	8'-1.5"	8'-1.5"	8'-1.5"	8'-2"	8'-2.5"	8'-2.5"	8'-3"	8'-3.5"	8'-4.5"	8'-5"	8'-5.5"	8'-6"	8'-6.5"	8'-7"	8'-7.5"
F BARS	BAR NO. & SPACING	4 @ 15"	5 @ 17"	4 @ 12"	5 @ 18"	6 @ 20"	6 @ 16"	5 @ 11"	7 @ 19"	8 @ 20"	7 @ 16"	8 @ 20"	6 @ 12"	7 @ 15"	8 @ 18"	7 @ 14"	8 @ 17"	9 @ 20"	8 @ 16"	8 @ 16"	9 @ 19"
	LENGTH, h	7'-2"	7'-2"	7'-2"	7'-2"	7'-2"	7'-2"	7'-2"	7'-2"	7'-2"	7'-2"	7'-2"	7'-2"	7'-2"	7'-2"	7'-2"	7'-2"	7'-2"	7'-2"	7'-2"	7'-2"
F_1 BARS	BAR NO. & SPACING	4 @ 15"	4 @ 17"	4 @ 12"	5 @ 18"	5 @ 20"	4 @ 16"	4 @ 11"	5 @ 19"	4 @ 20"	4 @ 16"	4 @ 20"	4 @ 12"	4 @ 15"	4 @ 18"	4 @ 14"	4 @ 17"	4 @ 20"	4 @ 16"	4 @ 16"	4 @ 19"
	LENGTH, h	5'-8"	5'-1"	5'-5.5"	5'-3"	4'-9.5"	4'-4"	4'-6"	4'-4.5"	3'-9"	4'-3"	3'-11"	4'-4.5"	4'-3.5"	4'-1"	4'-4.5"	4'-2.5"	3'-11.5"	4'-3"	4'-5"	4'-2"
G BARS	BAR NO. & SPACING	4 @ 14"	4 @ 14"	4 @ 14"	4 @ 9"	4 @ 14"	4 @ 14"	4 @ 14"	4 @ 14"	4 @ 13"	4 @ 13"	4 @ 13"	4 @ 13"	4 @ 14"	4 @ 14"	4 @ 14"	4 @ 14"	4 @ 14"	4 @ 14"	4 @ 14"	4 @ 14"
	LENGTH, h	3'-0.5"	3'-0.5"	3'-0.5"	3'-0.5"	3'-0.5"	3'-0.5"	3'-0.5"	3'-0.5'	3'-0.5"	3'-0.5"	3'-0.5"	3'-0.5"	3'-0.5"	3'-0.5"	3'-0.5"	3'-0.5"	3'-0.5"	3'-0.5"	3'-0.5"	3'-0.5"
H BARS	BAR NO. & SPACING												4 @ 13"	4 @ 14"	4 @ 14"	4 @ 14"	4 @ 14"	4 @ 14"	4 @ 14"	4 @ 14"	4 @ 14"
	LENGTH, h												3'-0.5"	3'-0.5"	3'-0.5"	3'-0.5"	3'-0.5"	3'-0.5"	3'-0.5"	3'-0.5"	3'-0.5"
LONGITUDINAL REINFORCEMENT																					
NO. 4 LONG. BARS	NUMBER IN TOP SLAB	15	15	15	12	12	12	12	12	12	12	12	12	12	12	12	12	12	12	12	12
	NUMBER IN BOTTOM SLAB	14	14	14	14	14	14	14	14	14	14	14	12	12	12	12	12	12	12	12	12
	NUMBER IN WALLS	20	20	20	20	20	20	20	20	20	20	20	20	20	20	20	20	20	20	20	20
	TOTAL NUMBER	49	49	49	46	46	46	46	46	46	46	46	44	44	44	44	44	44	44	44	44
CONCRETE: CU. YDS. PER LIN. FT.		0.69	0.69	0.69	0.69	0.69	0.69	0.69	0.69	0.69	0.71	0.70	0.72	0.73	0.75	0.76	0.78	0.79	0.80	0.81	0.82
STEEL: LBS. PER LIN. FT.		93.3	93.4	93.6	84.4	80.3	82.2	84.5	87.1	89.9	91.3	90.3	92.5	90.8	92.0	93.2	94.6	95.5	96.6	97.3	98.4

HYDRAULIC PROPERTIES (BOX)

n = .013

Area = 43.58 sq. ft.

$K = Q/S^{\frac{1}{2}} = \frac{1.486}{n} AR^{\frac{2}{3}} = 7{,}040$

DRAWN BY	REVISIONS		
G.D.M.	MARK	DATE	DESCRIPTION
CHECKED BY W.C.			
DESIGNED BY V.C.M.			
SUBMITTED BY C.W.H.			

SUPERSEDES DWG. NO. 2-D236.3 DATED APR. '57

LOS ANGELES COUNTY
FLOOD CONTROL DISTRICT

DESIGN TABLE
FOR
R. C. BOX CONDUITS

RECOMMENDED BY: DIVISION ENGINEER (MAINT.)
APPROVAL RECOMMENDED BY: ASST CHIEF DEPUTY ENGINEER
APPROVED BY: 1/5/70 CHIEF ENGINEER

SCALE	DATE	DWG. NO. 2-D236.3
NONE	1-1-71	SHEET 3 OF 14

BOX SIZE: W = 6'-4", H = 7'-6" DIAMETER OF HYDRAULICALLY EQUIVALENT PIPE = 90"

		DEPTH OF COVER IN FEET																			
		1	2	2'-11"	4	5	6	7	8	9	10	11	12	13	14	15	16	17	18	19	20
TOP SLAB THICKNESS, t_1		6.75	6.75	6.75	6.50	6.50	6.50	6.50	6.50	6.50	7.00	6.75	7.25	7.50	7.75	8.25	8.50	8.75	9.00	9.25	9.75
SIDE WALL THICKNESS, t_2		8.00	8.00	8.00	8.00	8.00	8.00	8.00	8.00	8.00	8.00	8.00	8.00	8.00	8.00	8.00	8.00	8.00	8.00	8.00	8.00
BOTTOM SLAB THICKNESS, t_3		7.00	7.00	7.00	7.00	7.00	7.00	7.00	7.25	7.50	8.00	8.00	8.25	8.50	8.75	9.00	9.50	9.75	10.00	10.25	10.50
TRANSVERSE REINFORCEMENT																					
B BARS	BAR NO. & SPACING	4 @ 18"	5 @ 20"	6 @ 14"	4 @ 12"	4 @ 11"	6 @ 20"	6 @ 19"	6 @ 15"	6 @ 14"	7 @ 19"	6 @ 14"	7 @ 17"	6 @ 13"	6 @ 12"	8 @ 19"	7 @ 15"	7 @ 14"	8 @ 17"	8 @ 17"	9 @ 20"
	LENGTH, h	7'-5"	7'-5"	7'-5"	7'-5"	7'-5"	7'-5"	7'-5"	7'-5"	7'-5"	7'-5"	7'-5"	7'-5"	7'-5"	7'-5"	7'-5"	7'-5"	7'-5"	7'-5"	7'-5"	7'-5"
B_1 BARS	BAR NO. & SPACING	9 @ 18"	9 @ 20"	6 @ 14"	4 @ 12"	4 @ 11"	5 @ 20"	5 @ 19"	4 @ 15"	4 @ 14"	5 @ 19"	4 @ 14"	4 @ 17"	4 @ 13"	4 @ 12"	4 @ 19"	4 @ 15"	4 @ 14"	4 @ 17"	4 @ 17"	4 @ 20"
	LENGTH, h	7'-5"	7'-5"	7'-5"	5'-1"	4'-11.5"	4'-7"	4'-7.5"	4'-2"	4'-1.5"	4'-4"	4'-2"	4'-0"	4'-4"	4'-3.5"	4'-0"	4'-4.5"	4'-3"	4'-0"	4'-2.5"	4'-0"
C BARS	BAR NO. & SPACING	4 @ 14"	4 @ 13"	4 @ 13"	4 @ 14"	4 @ 14"	4 @ 14"	4 @ 14"	4 @ 13"	4 @ 14"	4 @ 14"	4 @ 14"	4 @ 13"	4 @ 13"	4 @ 13"	4 @ 13"	4 @ 14"	4 @ 14"	4 @ 14"	4 @ 14"	4 @ 14"
	HORIZ. LENGTH, h	3'-3.5"	3'-3.5"	3'-3.5"	3'-3.5"	3'-3.5"	3'-3.5"	3'-3.5"	3'-3.5"	3'-3.5"	3'-3.5"	3'-3.5"	3'-3.5"	3'-3.5"	3'-3.5"	3'-3.5"	3'-3.5"	3'-3.5"	3'-3.5	3'-3.5"	3'-3.5"
	VERT. LENGTH, v	7'-6"	7'-6"	7'-6"	7'-5.5"	7'-5.5"	7'-5.5"	7'-5.5"	7'-5.5"	7'-5.5"	7'-6"	7'-6"	7'-6.5"	7'-6.5"	7'-7"	7'-7.5"	7'-7.5"	7'-8"	7'-8"	7'-8.5"	7'-9"
C_1 BARS	BAR NO. & SPACING	4 @ 14"	4 @ 13"	4 @ 13"	4 @ 14"	4 @ 14"	4 @ 14"	4 @ 14"	4 @ 13"	5 @ 14"	5 @ 14"	5 @ 14"	4 @ 13"	4 @ 13"	4 @ 13"	4 @ 13"	4 @ 14"	4 @ 14"	4 @ 14"	4 @ 14"	4 @ 14"
	HORIZ. LENGTH, h	1'-6"	1'-5"	1'-4.5"	1'-2.5"	1'-3"	1'-3"	1'-3.5"	1'-3.5"	1'-4.5"	1'-4.5"	1'-4"	1'-4"	1'-4"	1'-4"	1'-4.5"	1'-5"	1'-5"	1'-5.5"	1'-5.5"	1'-6"
	VERT. LENGTH, v	3'-11.5"	2'-10"	2'-4"	1'-0.5"	1'-1.5"	1'-3"	1'-4.5"	1'-4"	1'-6.5"	1'-6.5"	1'-6"	1'-5.5"	1'-5.5"	1'-6"	1'-6.5"	1'-7"	1'-7"	1'-7"	1'-7"	1'-7.5"
C_2 BARS	BAR NO. & SPACING	5 @ 14"	5 @ 13"	5 @ 13"	5 @ 14"	4 @ 14"	4 @ 14"	4 @ 14"	4 @ 13"	4 @ 14"	4 @ 14"	4 @ 14"	4 @ 13"	4 @ 13"	4 @ 13"	4 @ 13"	4 @ 14"	4 @ 14"	4 @ 14"	4 @ 14"	4 @ 14"
	HORIZ. LENGTH, h	3'-2.5"	3'-2.5"	3'-2"	3'-2.5"	3'-2.5"	3'-2.5"	3'-2.5"	3'-2.5"	3'-5.5"	3'-3.5"	3'-3.5"	3'-3.5"	3'-3.5"	3'-3.5"	3'-3.5"	3'-3.5"	3'-3.5"	3'-3.5"	3'-3.5"	3'-3.5"
	VERT. LENGTH, v	2'-0"	2'-0"	2'-0"	2'-0"	2'-0"	2'-0"	2'-0"	2'-0.5"	2'-0.5"	2'-1"	2'-1"	2'-1.5"	2'-1.5"	2'-2"	2'-2"	2'-2.5"	2'-3"	2'-3"	2'-3.5"	2'-3.5"
C_3 BARS	BAR NO. & SPACING					4 @ 14"	4 @ 14"	5 @ 14"	5 @ 13"	5 @ 14"	4 @ 14"	4 @ 14"	4 @ 13"	4 @ 13"	4 @ 13"	4 @ 13"	4 @ 14"	4 @ 14"	4 @ 14"	4 @ 14"	4 @ 14"
	HORIZ. LENGTH, h					1'-3"	1'-3.5"	1'-4"	1'-4"	1'-4"	1'-4.5"	1'-4.5"	1'-4"	1'-4.5"	1'-4.5"	1'-4.5"	1'-5.5"	1'-5.5"	1'-5.5"	1'-6"	1'-6"
	VERT. LENGTH, v					2'-0"	2'-0"	1'-5"	1'-5"	1'-6"	1'-6"	1'-5.5"	1'-5"	1'-5.5"	1'-6"	1'-6"	1'-7.5"	1'-8"	1'-8"	1'-8.5"	1'-8.5"
D BARS	BAR NO. & SPACING	4 @ 18"	4 @ 18"	4 @ 18"	4 @ 18"	4 @ 18"	4 @ 18"	4 @ 18"	4 @ 18"	4 @ 18"	4 @ 18"	4 @ 18"	4 @ 18"	4 @ 18"	4 @ 18"	4 @ 18"	4 @ 18"	4 @ 18"	4 @ 18"	4 @ 18"	4 @ 18"
	LENGTH, v	8'-4.5"	8'-4.5"	8'-5"	8'-4.5"	8'-4.5"	8'-4.5"	8'-4.5"	8'-4.5"	8'-5"	8'-6"	8'-5.5"	8'-6.5"	8'-7"	8'-7.5"	8'-8"	8-9"	8'-9.5"	8'-10"	8'-10.5"	8'-11"
F BARS	BAR NO. & SPACING	5 @ 18"	5 @ 16"	4 @ 11"	5 @ 17"	6 @ 19"	6 @ 15"	7 @ 19"	7 @ 16"	6 @ 12"	7 @ 15"	6 @ 12"	8 @ 18"	7 @ 14"	8 @ 17"	9 @ 20"	8 @ 16"	8 @ 16"	9 @ 19"	8 @ 15"	8 @ 15
	LENGTH, h	7'-5"	7'-5"	7'-5"	7'-5"	7'-5"	7'-5"	7'-5"	7'-5"	7'-5"	7'-5"	7'-5"	7'-5"	7'-5"	7'-5"	7'-5"	7'-5"	7'-5"	7'-5"	7'-5"	7'-5"
F_1 BARS	BAR NO. & SPACING	4 @ 18"	4 @ 16"	4 @ 11"	5 @ 17"	5 @ 19"	4 @ 15"	5 @ 19"	4 @ 16"	4 @ 12"	4 @ 15	4 @ 12	4 @ 18	4 @ 14"	4 @ 17"	4 @ 20	4 @ 16"	4 @ 16"	4 @ 19"	4 @ 15"	4 @ 15"
	LENGTH, h	5'-4"	5'-2"	5'-6"	5'-5"	4'-11.5"	4'-5.5"	4'-5.5"	4'-2.5"	4'-5"	4'-4"	4'-6.5"	4'-0.5"	4'-4.5"	4'-2.5"	3'-11.5"	4'-3.5"	4'-6"	4'-3"	4'-5.5"	4'-7.5"
G BARS	BAR NO. & SPACING	4 @ 14"	4 @ 13"	4 @ 13"	4 @ 14"	4 @ 14"	4 @ 14"	4 @ 14"	4 @ 13"	4 @ 14"	4 @ 14"	4 @ 14"	4 @ 13"	4 @ 13"	4 @ 13"	4 @ 13"	4 @ 14"	4 @ 14"	4 @ 14"	4 @ 14"	4 @ 14"
	LENGTH, h	3'-2"	3'-2"	3'-2"	3'-2"	3'-2"	3'-2"	3'-2"	3'-2"	3'-2"	3'-2"	3'-2"	3'-2"	3'-2"	3'-2"	3'-2"	3'-2"	3'-2"	3'-2"	3'-2"	3'-2"
H BARS	BAR NO. & SPACING										4 @ 14"	4 @ 14"	4 @ 13"	4 @ 13"	4 @ 13"	4 @ 13"	4 @ 14"	4 @ 14"	4 @ 14"	4 @ 14"	4 @ 14"
	LENGTH, h										3'-2"	3'-2"	3'-2"	3'-2"	3'-2"	3'-2"	3'-2"	3'-2"	3'-2"	3'-2"	3'-2"
LONGITUDINAL REINFORCEMENT																					
NO. 4 LONG. BARS	NUMBER IN TOP SLAB	16	16	15	12	12	12	12	12	12	12	12	12	12	12	12	12	12	12	12	12
	NUMBER IN BOTTOM SLAB	14	14	14	14	14	14	14	14	14	12	12	12	12	12	12	12	12	12	12	12
	NUMBER IN WALLS	20	20	20	20	20	20	20	20	20	20	20	20	20	20	20	20	20	20	20	20
	TOTAL NUMBER	50	50	49	46	46	46	46	46	46	44	44	44	44	44	44	44	44	44	44	44
CONCRETE: CU. YDS. PER LIN. FT.		0.71	0.71	0.71	0.71	0.71	0.71	0.71	0.71	0.72	0.74	0.74	0.76	0.77	0.78	0.80	0.82	0.83	0.84	0.85	0.87
STEEL: LBS. PER LIN. FT.		98.0	99.3	98.4	81.8	83.9	85.6	88.6	92.8	94.7	94.3	93.4	95.2	96.3	98.0	99.1	97.9	99.1	100.3	101.1	102.1

HYDRAULIC PROPERTIES (BOX)

n = .013

Area = 47.0 sq. ft.

$K = Q/S^{\frac{1}{2}} = \frac{1.486}{n} AR^{\frac{2}{3}} = 7{,}780$

DRAWN BY	REVISIONS		
J.C.H.	MARK	DATE	DESCRIPTION
CHECKED BY R.J.S.			
DESIGNED BY V.C.M.			
SUBMITTED BY C.W.H.			

SUPERSEDES DWG NO 2-D236.4 DATED APR. 57

LOS ANGELES COUNTY
FLOOD CONTROL DISTRICT

DESIGN TABLE
FOR
R. C. BOX CONDUITS

RECOMMENDED BY: H. J. Milne, DIVISION ENGINEER (DESIGN)

APPROVAL RECOMMENDED BY: E. Magness, ASS'T CHIEF DEPUTY ENGINEER

APPROVED BY: A. E. Bourquin, CHIEF ENGINEER 1/5/70

SCALE	DATE	DWG. NO. 2-D236.4
NONE	1-1-71	SHEET 4 OF 14

BOX SIZE: W = 6'-5", H = 7'-9" DIAMETER OF HYDRAULICALLY EQUIVALENT PIPE = 93"

		DEPTH OF COVER IN FEET																			
		1	2	2'-11"	4	5	6	7	8	9	10	11	12	13	14	15	16	17	18	19	20
TOP SLAB THICKNESS, t_1		6.75	6.75	6.75	6.50	6.50	6.50	6.50	6.50	6.75	7.00	6.75	7.25	7.75	8.00	8.25	8.50	8.75	9.25	9.50	9.75
SIDE WALL THICKNESS, t_2		8.00	8.00	8.00	8.00	8.00	8.00	8.00	8.00	8.00	8.00	8.00	8.00	8.00	8.00	8.00	8.00	8.00	8.00	8.00	8.00
BOTTOM SLAB THICKNESS, t_3		7.00	7.00	7.00	7.00	7.00	7.00	7.00	7.25	7.75	8.00	8.00	8.25	8.50	9.00	9.25	9.50	9.75	10.25	10.50	10.75
TRANSVERSE REINFORCEMENT																					
B BARS	BAR NO. & SPACING	7@9"	4@18"	5@17"	5@18"	4@11"	4@10"	6@18"	5@11"	6@14"	7@17"	6@14"	6@13"	7@16"	6@12"	7@15"	8@18"	7@14"	8@17"	9@20"	9@20"
	LENGTH, h	7'-6.5"	7'-6.5"	7'-6.5"	7'-6.5"	7'-6.5"	7'-6.5"	7'-6.5"	7'-6.5"	7'-6.5"	7'-6.5"	7'-6.5"	7'-6.5"	7'-6.5"	7'-6.5"	7'-6.5"	7'-6.5"	7'-6.5"	7'-6.5"	7'-6.5"	7'-6.5"
B_1 BARS	BAR NO. & SPACING		9@18"	8@17"	5@18"	4@11"	4@10"	5@18"	4@11"	4@14"	4@17"	4@14"	4@13"	4@16"	4@12"	4@15"	4@18"	4@14"	4@17"	4@20"	4@20"
	LENGTH, h		7'-6.5"	7'-6.5"	5'-1"	5'-1"	5'-0"	4'-7"	4'-5"	4'-3"	4'-1"	4'-3"	4'-3"	4'-1"	4'-5"	4'-3.5"	4'-0"	4'-4"	4'-2"	3'-10.5"	4'-1"
C BARS	BAR NO. & SPACING	4@13"	4@13"	4@13"	4@14"	4@14"	4@14"	4@13"	4@14"	4@14"	4@14"	4@14"	4@14"	4@13"	4@13"	4@13"	4@13"	4@13"	4@14"	4@14"	4@14"
	HORIZ. LENGTH, h	3'-4"	3'-4"	3'-4"	3'-4"	3'-4"	3'-4"	3'-4"	3'-4"	3'-4"	3'-4"	3'-4"	3'-4"	3'-4"	3'-4"	3'-4"	3'-4"	3'-4"	3'-4"	3'-4"	3'-4"
	VERT. LENGTH, v	7'-9"	7'-9"	7'-9"	7'-8.5"	7'-8.5"	7'-8.5"	7'-8.5"	7'-8.5"	7'-9"	7'-9"	7'-9"	7'-9.5"	7'-10"	7'-10"	7'-10.5"	7'-10.5"	7'-11"	7'-11.5"	7'-11.5"	8'-0"
C_1 BARS	BAR NO. & SPACING	4@13"	4@13"	4@13"	4@14"	4@14"	4@14"	4@13"	5@14"	5@14"	5@14"	5@14"	5@14"	4@13"	4@13"	4@13"	4@13"	4@13"	4@14"	4@14"	4@14"
	HORIZ. LENGTH, h	1'-6"	1'-5.5"	1'-5"	1'-3"	1'-3"	1'-3.5"	1'-3.5"	1'-4.5"	1'-4.5"	1'-4.5"	1'-4.5"	1'-4.5"	1'-4.5"	1'-4.5"	1'-5"	1'-5"	1'-5"	1'-6"	1'-6"	1'-6.5"
	VERT. LENGTH, v	3'-7"	3'-0.5"	2'-5"	1'-1.5"	1'-2.5"	1'-4"	1'-3.5"	1'-6"	1'-7"	1'-7"	1'-6.5"	1'-6.5"	1'-6"	1'-6.5"	1'-6.5"	1'-6.5"	1'-7"	1'-7.5"	1'-8"	1'-8"
C_2 BARS	BAR NO. & SPACING	4@13"	5@13"	5@13"	4@14"	4@14"	4@14"	4@13"	4@14"	4@14"	4@14"	4@14"	4@14"	4@13"	4@13"	4@13"	4@13"	4@13"	4@14"	4@14"	4@14"
	HORIZ. LENGTH, h	3'-5"	3'-5"	3'-5"	3'-5"	3'-5"	3'-5"	3'-5"	3'-7"	3'-4"	3'-4"	3'-4"	3'-4"	3'-4"	3'-4"	3'-4"	3'-4"	3'-4"	3'-4"	3'-4"	3'-4"
	VERT. LENGTH, v	2'-0"	2'-0"	2'-0"	2'-0"	2'-0"	2'-0"	2'-0"	2'-0.5"	2'-1"	2'-1"	2'-1"	2'-1.5"	2'-1.5"	2'-2"	2'-2.5"	2'-2.5"	2'-3"	2'-3.5"	2'-3.5"	2'-4"
C_3 BARS	BAR NO. & SPACING	4@13"			4@14"	4@14"	4@14"	4@13"	5@14"	5@14"	5@14"	4@14"	5@14"	4@13"	4@13"	4@13"	4@13"	4@13"	4@14"	4@14"	4@14"
	HORIZ. LENGTH, h	1'-0.5"			1'-3"	1'-3.5"	1'-4"	1'-4"	1'-4.5"	1'-4.5"	1'-4.5"	1'-4.5"	1'-5"	1'-4.5"	1'-5"	1'-5"	1'-5.5"	1'-5.5"	1'-6.5"	1'-6.5'	1'-6.5"
	VERT. LENGTH, v	2'-0"			2'-0"	2'-0"	1'-4"	1'-4.5"	1'-6.5"	1'-6.5"	1'-6"	1'-6"	1'-6.5"	1'-6"	1'-6.5"	1'-7"	1'-7"	1'-7.5"	1'-9"	1'-9"	1'-9.5"
D BARS	BAR NO. & SPACING	4@18"	4@18"	4@18"	4@18"	4@18"	4@18"	4@18"	4@18"	4@18"	4@18"	4@18"	4@18"	4@18"	4@18"	4@18"	4@18"	4@18"	4@18"	4@18"	4@18"
	LENGTH, v	8'-7.5"	8'-7.5"	8'-8"	8'-7.5"	8'-7.5"	8'-7.5"	8'-7.5"	8'-8"	8'-8.5"	8'-9"	8'-9"	8'-9.5"	8'-10.5"	8'-11"	8'-11.5"	9'-0"	9'-0.5"	9'-1.5"	9'-2"	9'-2.5"
F BARS	BAR NO. & SPACING	5@17"	5@19"	4@11"	6@20"	6@18"	5@11"	6@13"	7@17"	8@19"	7@15"	7@15"	8@18"	7@14"	8@17"	9@20"	8@16"	9@19"	8@15"	8@15"	9@18"
	LENGTH, h	7'-6.5"	7'-6.5"	7'-6.5"	7'-6.5"	7'-6.5"	7'-6.5"	7'-6.5"	7'-6.5"	7'-6.5"	7'-6.5"	7'-6.5"	7'-6.5"	7'-6.5"	7'-6.5"	7'-6.5"	7'-6.5"	7'-6.5"	7'-6.5"	7'-6.5"	7'-6.5"
F_1 BARS	BAR NO. & SPACING	4@17"	5@19"	4@11"	5@20"	5@18"	4@11"	4@13"	5@17"	4@19"	4@15"	4@15"	4@18"	4@14"	4@17"	4@20"	4@16"	4@19"	4@15"	4@15"	4@18"
	LENGTH, h	5'-3.5"	5'-9"	5'-7.5"	5'-0.5"	4'-11"	4'-9"	4'-4.5"	4'-5.5"	4'-1"	4'-5.5"	4'-4.5"	4'-2"	4'-6"	4'-4.5"	4'-1.5"	4'-5"	4'-2"	4'-5"	4'-7"	4'-4.5"
G BARS	BAR NO. & SPACING	4@13"	4@13"	4@13"	4@14"	4@14"	4@14"	4@13"	4@14"	4@14"	4@14"	4@14"	4@14"	4@13"	4@13"	4@13"	4@13"	4@13"	4@14"	4@14"	4@14"
	LENGTH, h	3'-3"	3'-3"	3'-3"	3'-3"	3'-3"	3'-3"	3'-3"	3'-3"	3'-3"	3'-3"	3'-3"	3'-3"	3'-3"	3'-3"	3'-3"	3'-3"	3'-3"	3'-3"	3'-3"	3'-3"
H BARS	BAR NO. & SPACING									4@14"	4@14"	4@14"	4@14"	4@13"	4@13"	4@13"	4@13"	4@13"	4@14"	4@14"	4@14"
	LENGTH, h									3'-3"	3'-3"	3'-3"	3'-3"	3'-3"	3'-3"	3'-3"	3'-3"	3'-3"	3'-3"	3'-3"	3'-3"
LONGITUDINAL REINFORCEMENT																					
NO. 4 LONG. BARS	NUMBER IN TOP SLAB	16	16	16	12	12	12	12	12	12	12	12	12	12	12	12	12	12	12	12	12
	NUMBER IN BOTTOM SLAB	14	14	14	14	14	14	14	14	12	12	12	12	12	12	12	12	12	12	12	12
	NUMBER IN WALLS	20	20	20	20	20	20	20	20	20	20	20	20	20	20	20	20	20	20	20	20
	TOTAL NUMBER	50	50	50	46	46	46	46	46	44	44	44	44	44	44	44	44	44	44	44	44
CONCRETE: CU. YDS. PER LIN. FT.		0.73	0.73	0.73	0.72	0.72	0.72	0.72	0.73	0.75	0.76	0.75	0.77	0.79	0.81	0.82	0.83	0.84	0.87	0.88	0.89
STEEL: LBS. PER LIN. FT.		101.7	101.5	100.9	84.1	85.7	87.0	90.9	95.3	96.5	97.5	94.8	98.4	97.9	99.4	100.6	101.7	102.9	102.2	103.1	103.7

HYDRAULIC PROPERTIES (BOX)

n = .013

Area = 49.41 sq. ft.

$K = Q/S^{\frac{1}{2}} = \frac{1.486}{n} AR^{\frac{2}{3}} = 8{,}300$

DRAWN BY	REVISIONS		
J.C.H.	MARK	DATE	DESCRIPTION
CHECKED BY R.J.S.			
DESIGNED BY V.C.M.			
SUBMITTED BY C.W.H.			

SUPERSEDES DWG NO 2-D236.5 DATED APR '57

LOS ANGELES COUNTY
FLOOD CONTROL DISTRICT

DESIGN TABLE
FOR
R. C. BOX CONDUITS

RECOMMENDED BY H. J. Mike — DIVISION ENGINEER (DESIGN)
APPROVAL RECOMMENDED BY C. Magness — ASS'T CHIEF DEPUTY ENGINEER
APPROVED BY A. E. Bruington 1-5-70 — CHIEF ENGINEER

SCALE	DATE	DWG. NO. 2-D236.5
NONE	1-1-71	SHEET 5 OF 14

BOX SIZE: W = 6'-9", H = 8'-0" DIAMETER OF HYDRAULICALLY EQUIVALENT PIPE = 96"

		DEPTH OF COVER IN FEET																			
		1	2	2'-11"	4	5	6	7	8	9	10	11	12	13	14	15	16	17	18	19	20
TOP SLAB THICKNESS, t_1		6.75	6.75	6.75	6.50	6.50	6.50	6.50	6.50	7.00	7.25	7.25	7.50	8.00	8.25	8.50	8.75	9.25	9.50	9.75	10.00
SIDE WALL THICKNESS, t_2		8.00	8.00	8.00	8.00	8.00	8.00	8.00	8.00	8.00	8.00	8.00	8.00	8.00	8.00	8.00	8.00	8.00	8.00	8.00	8.00
BOTTOM SLAB THICKNESS, t_3		7.00	7.00	7.00	7.00	7.00	7.00	7.25	7.50	8.00	8.25	8.25	8.50	8.75	9.25	9.50	10.00	10.25	10.50	10.75	11.00
TRANSVERSE REINFORCEMENT																					
B BARS	BAR NO. & SPACING	5 @ 13"	6 @ 15"	6 @ 13"	6 @ 20"	4 @ 10"	6 @ 18"	5 @ 11"	7 @ 19"	6 @ 13"	7 @ 16"	6 @ 13"	7 @ 17"	6 @ 12"	8 @ 18"	8 @ 19"	8 @ 17"	9 @ 20"	8 @ 16"	9 @ 19"	9 @ 20"
	LENGTH, h	7'-10"	7'-10"	7'-10"	7'-10"	7'-10"	7'-10"	7'-10"	7'-10"	7'-10"	7'-10"	7'-10"	7'-10"	7'-10"	7'-10"	7'-10"	7'-10"	7'-10"	7'-10"	7'-10"	7'-10"
B_1 BARS	BAR NO. & SPACING	7 @ 13"	7 @ 15"	6 @ 13"	5 @ 20"	4 @ 10"	5 @ 18"	4 @ 11"	5 @ 19"	4 @ 13"	4 @ 16"	4 @ 13"	5 @ 17"	4 @ 12"	4 @ 18"	5 @ 19"	4 @ 17"	4 @ 20"	4 @ 16"	4 @ 19"	5 @ 20"
	LENGTH, h	7'-10"	7'-10"	7'-10"	4'-10"	5'-3"	4'-10"	4'-7.5"	4'-5"	4'-5"	4'-3.5"	4'-5.5"	4'-6.5"	4'-7.5"	4'-1"	4'-7"	4'-3"	4'-0.5"	4'-4"	4'-1.5"	4'-8"
C BARS	BAR NO. & SPACING	4 @ 12"	4 @ 12"	4 @ 12"	4 @ 14"	4 @ 14"	4 @ 13"	4 @ 14"	4 @ 14"	4 @ 14"	4 @ 14"	4 @ 14"	4 @ 14"	4 @ 14"	4 @ 14"	4 @ 14"	4 @ 13"	4 @ 13"	4 @ 13"	4 @ 13"	4 @ 13"
	HORIZ. LENGTH, h	3'-5"	3'-5"	3'-5"	3'-5"	3'-5"	3'-5"	3'-5"	3'-5"	3'-5"	3'-5"	3'-5"	3'-5"	3'-5"	3'-5"	3'-5"	3'-5'	3'-5"	3'-5"	3'-5"	3'-5"
	VERT. LENGTH, v	8'-0"	8'-0"	8'-0"	7'-11.5"	7'-11.5"	7'-11.5"	7'-11.5"	7'-11.5"	8'-0"	8'-0.5"	8'-0.5"	8'-0.5"	8'-1"	8'-1.5"	8'-1.5"	8'-2"	8'-2.5"	8'-2.5"	8'-3"	8'-3"
C_1 BARS	BAR NO. & SPACING	4 @ 12"	4 @ 12"	4 @ 12"	4 @ 14"	4 @ 14"	4 @ 13"	5 @ 14"	5 @ 14"	5 @ 14"	5 @ 14"	5 @ 14"	5 @ 14"	5 @ 14"	5 @ 14"	5 @ 14"	4 @ 13"	4 @ 13"	4 @ 13"	4 @ 13"	4 @ 13"
	HORIZ. LENGTH, h	1'-6.5"	1'-6"	1'-5"	1'-4"	1'-4.5"	1'-4.5	1'-5"	1'-5.5"	1'-5"	1'-5"	1'-5"	1'-5"	1'-5.5"	1'-5.5"	1'-6"	1'-5.5"	1'-6"	1'-6"	1'-6.5"	1'-6.5"
	VERT. LENGTH, v	3'-8.5"	3'-2"	2'-5.5"	1'-4.5"	1'-5.5"	1'-5"	1'-7.5"	1'-9"	1'-8.5"	1'-8.5"	1'-8"	1'-8"	1'-8"	1'-8.5"	1'-8.5"	1'-8"	1'-8"	1'-8"	1'-8.5"	1'-8.5"
C_2 BARS	BAR NO. & SPACING	4 @ 12"	4 @ 12"	5 @ 12"	4 @ 14"	4 @ 14"	4 @ 13"	4 @ 14"	4 @ 14"	4 @ 14"	4 @ 14"	4 @ 14"	4 @ 14"	4 @ 14"	4 @ 14"	4 @ 14"	4 @ 13"	4 @ 13"	4 @ 13"	4 @ 13"	4 @ 13"
	HORIZ. LENGTH, h	3'-7"	3'-7"	3'-6.5"	3'-7"	3'-7"	3'-7"	3'-7"	3'-5"	3'-5"	3'-5"	3'-5"	3'-5"	3'-5"	3'-5"	3'-5"	3'-5"	3'-5"	3'-5"	3'-5"	3'-5"
	VERT. LENGTH, v	2'-0"	2'-0"	2'-0"	2'-0"	2'-0"	2'-0"	2'-0.5"	2'-0.5"	2'-1"	2'-1.5"	2'-1.5"	2'-1.5"	2'-2"	2'-2.5"	2'-2.5"	2'-3"	2'-3.5"	2'-3.5"	2'-4"	2'-4"
C_3 BARS	BAR NO. & SPACING	4 @ 12"	4 @ 12"		4 @ 14"	4 @ 14"	5 @ 13"	5 @ 14"	5 @ 14"	5 @ 14"	5 @ 14"	5 @ 14"	5 @ 14"	5 @ 14"	4 @ 14"	4 @ 14"	4 @ 13"	4 @ 13"	4 @ 13"	4 @ 13"	4 @ 13"
	HORIZ. LENGTH, h	1'-1"	1'-1.5"		1'-4"	1'-4.5"	1'-4.5"	1'-5.5"	1'-5"	1'-5.5"	1'-5.5"	1'-5.5"	1'-5.5"	1'-6"	1'-6"	1'-6"	1'-6"	1'-6.5"	1'-6.5"	1'-6.5"	1'-7"
	VERT. LENGTH, v	2'-0"	2'-0"		2'-0"	1'-5"	1'-5.5"	1'-9"	1'-8"	1'-8"	1'-7.5"	1'-8"	1'-8"	1'-8"	1'-8.5"	1'-8.5"	1'-8.5"	1'-8.5"	1'-9"	1'-9"	1'-9.5"
D BARS	BAR NO. & SPACING	4 @ 18"	4 @ 18"	4 @ 18"	4 @ 18"	4 @ 18"	4 @ 18"	4 @ 18"	4 @ 18"	4 @ 18"	4 @ 18"	4 @ 18"	4 @ 18"	4 @ 18"	4 @ 18"	4 @ 18"	4 @ 18"	4 @ 18"	4 @ 18"	4 @ 18"	4 @ 18"
	LENGTH, v	8'-10.5"	8'-10.5"	8'-11"	8-10.5"	8'-10.5"	8'-10.5"	8'-10.5"	8'-11"	9'-0"	9'-0.5"	9'-0.5"	9'-1"	9'-2"	9'-2.5"	9'-3"	9'-3.5"	9'-4.5"	9'-5"	9'-5.5"	9'-6"
F BARS	BAR NO. & SPACING	5 @ 20"	4 @ 11"	5 @ 16"	5 @ 15"	6 @ 17"	7 @ 19"	6 @ 12"	7 @ 15"	8 @ 19"	8 @ 19"	8 @ 19"	8 @ 18"	7 @ 13"	9 @ 19"	9 @ 20"	8 @ 15"	9 @ 18"	8 @ 14"	8 @ 14"	9 @ 17"
	LENGTH, h	7'-10"	7'-10"	7'-10"	7'-10"	7'-10"	7'-10"	7'-10"	7'-10"	7'-10"	7'-10"	7'-10"	7'-10"	7'-10"	7'-10"	7'-10"	7'-10"	7'-10"	7'-10"	7'-10"	7'-10"
F_1 BARS	BAR NO. & SPACING	5 @ 20"	4 @ 11"	5 @ 16"	5 @ 15"	5 @ 17"	5 @ 19"	4 @ 12"	4 @ 15"	5 @ 19"	5 @ 19"	5 @ 19"	5 @ 18"	4 @ 13"	4 @ 19"	5 @ 20"	4 @ 15"	4 @ 18"	4 @ 14"	4 @ 14"	4 @ 17"
	LENGTH, h	6'-0.5"	5'-10"	5'-9.5"	5'-7.5"	5'-2"	4'-9.5"	4'-7"	4'-5.5"	4'-7"	4'-9"	4'-8.5"	4'-8"	4'-7.5"	4'-1.5"	4'-8.5"	4'-7.5"	4'-5"	4'-6"	4'-8.5"	4'-7"
G BARS	BAR NO. & SPACING	4 @ 12"	4 @ 12"	4 @ 12"	4 @ 14"	4 @ 14"	4 @ 13"	4 @ 14"	4 @ 14"	4 @ 14"	4 @ 14"	4 @ 14"	4 @ 14"	4 @ 14"	4 @ 14"	4 @ 14"	4 @ 13"	4 @ 13"	4 @ 13"	4 @ 13"	4 @ 13"
	LENGTH, h	3'-4.5"	3'-4.5"	3'-4.5"	3'-4.5"	3'-4.5"	3'-4.5"	3'-4.5"	3'-4.5"	3'-4.5"	3'-4.5"	3'-4.5"	3'-4.5"	3'-4.5"	3'-4.5"	3'-4.5"	3'-4.5"	3'-4.5"	3'-4.5"	3'-4.5"	3'-4.5"
H BARS	BAR NO. & SPACING								4 @ 14"	4 @ 14"	4 @ 14"	4 @ 14"	4 @ 14"	4 @ 14"	4 @ 14"	4 @ 14"	4 @ 13"	4 @ 13"	4 @ 13"	4 @ 13"	4 @ 13"
	LENGTH, h								3'-4.5"	3'-4.5"	3'-4.5"	3'-4.5"	3'-4.5"	3'-4.5"	3'-4.5"	3'-4.5"	3'-4.5"	3'-4.5"	3'-4.5"	3'-4.5"	3'-4.5"
LONGITUDINAL REINFORCEMENT																					
NO. 4 LONG. BARS	NUMBER IN TOP SLAB	18	18	18	13	13	13	13	13	13	13	13	13	13	13	13	13	13	13	13	13
	NUMBER IN BOTTOM SLAB	14	14	14	14	14	14	14	13	13	13	13	13	13	13	13	13	13	13	13	13
	NUMBER IN WALLS	20	20	20	20	20	20	20	20	20	20	20	20	20	20	20	20	20	20	20	20
	TOTAL NUMBER	52	52	52	47	47	47	47	46	46	46	46	46	46	46	46	46	46	46	46	46
CONCRETE: CU. YDS. PER LIN. FT.		0.76	0.76	0.76	0.75	0.75	0.75	0.76	0.76	0.79	0.80	0.80	0.81	0.83	0.85	0.86	0.88	0.90	0.91	0.93	0.94
STEEL: LBS. PER LIN. FT.		109.6	110.1	109.2	88.8	89.5	95.5	98.8	101.1	102.8	103.5	102.9	104.9	105.7	105.8	106.8	108.0	109.5	110.9	111.7	112.5

HYDRAULIC PROPERTIES (BOX)

n = .013

Area = 53.5 sq. ft.

$K = Q/S^{\frac{1}{2}} = \frac{1.486}{n} AR^{\frac{2}{3}} = 9{,}256$

DRAWN BY	REVISIONS		
E.E.N	MARK	DATE	DESCRIPTION
CHECKED BY G.S			
DESIGNED BY V.C.M.			
SUBMITTED BY C.W.H.			

SUPERSEDES DWG. NO 2-D236.6 DATED APRIL '57

LOS ANGELES COUNTY
FLOOD CONTROL DISTRICT

DESIGN TABLE
FOR
R. C. BOX CONDUITS

RECOMMENDED BY: DIVISION ENGINEER DESIGN

APPROVAL RECOMMENDED BY: ASS'T CHIEF DEPUTY ENGINEER

APPROVED BY: CHIEF ENGINEER 1/5/70

SCALE	DATE	DWG. NO. 2-D236.6
NONE	1-1-71	SHEET 6 OF 14

BOX SIZE: W = 7'-1" , H = 8'-6" DIAMETER OF HYDRAULICALLY EQUIVALENT PIPE = 102"

		DEPTH OF COVER IN FEET																			
		1	2	2'-11"	4	5	6	7	8	9	10	11	12	13	14	15	16	17	18	19	20
TOP SLAB THICKNESS, t_1		7.00	7.00	7.00	6.50	6.50	6.50	6.50	6.75	7.25	7.50	7.50	7.75	8.00	8.50	8.75	9.25	9.50	9.75	10.25	10.50
SIDE WALL THICKNESS, t_2		8.00	8.00	8.00	8.00	8.00	8.00	8.00	8.00	8.00	8.00	8.00	8.00	8.00	8.00	8.00	8.00	8.00	8.00	8.00	8.00
BOTTOM SLAB THICKNESS, t_3		7.00	7.00	7.00	7.00	7.00	7.00	7.25	7.75	8.25	8.50	8.50	8.75	9.25	9.50	10.00	10.25	10.50	11.00	11.25	11.50
TRANSVERSE REINFORCEMENT																					
B BARS	BAR NO. & SPACING	6@12"	6@12"	5@15"	5@15"	6@15"	5@11"	6@13"	7@17"	6@12"	6@12"	7@17"	6@12"	6@11"	8@17"	9@20"	7@13"	9@19"	9@20"	8@15"	9@18"
	LENGTH, h	8'-2"	8'-2"	8'-2"	8'-2"	8'-2"	8'-2"	8'-2"	8'-2"	8'-2"	8'-2"	8'-2"	8'-2"	8'-2"	8'-2"	8'-2"	8'-2"	8'-2"	8'-2"	8'-2"	8'-2"
B_1 BARS	BAR NO. & SPACING	6@12"	6@12"	8@15"	5@15"	4@15"	4@11"	4@13"	5@17"	4@12"	4@12"	5@17"	4@12"	4@11"	4@17"	4@20"	4@13"	4@19"	5@20"	4@15"	4@18"
	LENGTH, h	8'-2"	8'-2"	8'-2"	5'-5.5"	4'-6.5"	4'-10.5"	4'-5"	4'-6"	4'-7"	4'-9"	4'-8.5"	4'-9.5"	4'-8"	4'-3"	4'-0"	4' 9"	4'-2"	4'-9"	4'-8"	4'-6"
C BARS	BAR NO. & SPACING	4@11"	4@11"	4@10"	4@13"	4@14"	4@14"	4@14"	4@13"	4@14"	4@14"	4@14"	4@14"	4@14"	4@14"	4@14"	4@14"	4@14"	4@14"	4@14"	4@14"
	HORIZ. LENGTH, h	3'-6"	3'-6"	3'-6'	3'-6"	3'-6"	3'-6"	3'-6"	3'-6"	3'-6"	3'-6"	3'-6"	3'-6"	3'-6"	3'-6"	3'-6"	3'-6"	3'-6"	3'-6"	3'-6"	3'-6"
	VERT. LENGTH, v	8'-6"	8'-6"	8'-6'	8'-5.5"	8'-5.5"	8'-5.5"	8'-5.5"	8'-6"	8'-6.5"	8'-6.5"	8'-6.5"	8'-7"	8'-7"	8'-7.5"	8'-8"	8'-8.5"	8'-8.5"	8'-9"	8'-9.5"	8'-9.5"
C_1 BARS	BAR NO. & SPACING	4@11"	4@11"	4@10"	4@13"	5@14"	5@14"	5@14"	5@13"	5@14"	5@14"	5@14"	5@14"	5@14"	5@14"	5@14"	5@14"	5@14"	5@14"	5@14"	5@14"
	HORIZ. LENGTH, h	1'-7"	1'-6.5"	1'-5.5"	1'-5"	1'-5.5"	1'-6"	1'-6.5"	1'-6"	1'-6"	1'-6"	1'-6"	1'-6"	1'-6"	1'-6.5"	1'-6.5"	1'-7"	1'-7.5"	1'-7.5"	1'-8"	1'-8"
	VERT. LENGTH, v	3'-9.5"	3'-2"	2'-1"	1'-5.5"	1'-8"	1'-9"	1'-11"	1'-9"	1'-11"	1'-9.5"	1'-9.5"	1'-9.5"	1'-9.5"	1'-9.5"	1'-10"	1'-10"	1'-10"	1'-10"	1'-10.5"	1'-10.5"
C_2 BARS	BAR NO. & SPACING	4@11"	4@11"	4@10"	4@13"	4@14"	4@14"	4@14"	4@13"	4@14"	4@14"	4@14"	4@14"	4@14"	4@14"	4@14"	4@14"	4@14"	4@14"	4@14"	4@14"
	HORIZ. LENGTH, h	3'-6"	3'-6"	3'-6"	3'-6"	3'-6"	3'-6"	3'-6"	3'-6"	3'-6"	3'-6"	3'-6"	3'-6"	3'-6"	3'-6"	3'-6"	3'-6"	3'-6"	3'-6"	3'-6"	3'-6"
	VERT. LENGTH, v	2'-0"	2'-0"	2'-0	2'-0"	2'-0"	2'-0"	2'-0.5"	2'-1"	2'-1.5"	2'-1.5"	2'-1.5"	2'-2"	2'-2.5"	2'-2.5"	2'-3"	2'-3.5"	2'-3.5"	2'-4"	2'-4.5"	2'-4.5"
C_3 BARS	BAR NO. & SPACING	4@11"	4@11"	4@10"	4@13"	5@14"	5@14"	5@14"	5@13"	5@14"	5@14"	5@14"	5@14"	5@14"	5@14"	5@14"	5@14"	5@14"	4@14"	4@14"	4@14"
	HORIZ. LENGTH, h	1'-2"	1'-2.5"	1'-2.5"	1'-5'	1'-6"	1'-6.5"	1'-6"	1'-5.5"	1'-6.5"	1'-6.5"	1'-6.5"	1'-6.5"	1'-7"	1'-7"	1'-7.5"	1'-7.5"	1'-8"	1'-8.5"	1'-8.5"	1'-8.5"
	VERT. LENGTH, v	2'-0"	2'-0"	2'-0"	1'-4.5"	1'-8.5"	1'-11.5"	1'-11.5"	1'-8.5"	1'-9.5"	1'-9.5"	1'-9.5"	1'-9"	1'-9"	1'-9.5"	1'-10"	1'-10.5"	1'-10.5"	1'-11"	1'-11.5"	1'-9"
D BARS	BAR NO. & SPACING	4@16"	4@18"	4@18"	4@18"	4@18"	4@18"	4@18"	4@18"	4@18"	4@18"	4@18"	4@18"	4@18"	4@18"	4@18"	4@18"	4@18"	4@18"	4@18"	4@18"
	LENGTH, v	9'-4.5"	9'-4.5"	9'-4.5"	9'-4.5"	9'-4.5"	9'-4.5"	9'-5"	9'-5.5"	9'-6.5"	9'-7"	9'-7"	9'-7.5"	9'-8.5"	9'-9"	9'-9.5"	9'-10.5"	9'-11"	9'-11.5"	10'-0.5"	10'-1"
F BARS	BAR NO. & SPACING	4@12"	6@20"	6@18"	5@11"	6@13"	6@12"	8@19"	8@19"	8@18"	7@13"	7@13"	8@17"	9@20"	8@15"	9@19"	8@14"	8@14"	9@16"	9@16"	9@16"
	LENGTH, h	8'-2"	8'-2"	8'-2"	8'-2"	8'-2"	8'-2"	8'-2"	8'-2"	8'-2"	8'-2"	8'-2"	8'-2"	8'-2"	8'-2"	8'-2"	8'-2"	8'-2"	8'-2"	8'-2"	8'-2"
F_1 BARS	BAR NO. & SPACING	4@12"	5@20"	5@18"	4@11"	4@13"	4@12"	5@19"	5@19"	5@18"	4@13"	4@13"	5@17"	5@20"	4@15"	5@19"	4@14"	4@14"	4@16"	4@16"	4@16"
	LENGTH, h	6'-3.5"	5'-8"	5'-6.5"	5'-2.5"	4'-9"	4'-9"	4'-7"	4'-9.5"	4'-10"	4'-9.5"	4'-8.5"	4'-10.5"	4'-10"	4'-8.5"	4'-11.5"	4'-8"	4'-10.5"	4'-3.5"	4'-6"	4'-8"
G BARS	BAR NO. & SPACING	4@11"	4@11"	4@10"	4@13"	4@14"	4@14"	4@14"	4@13	4@14"	4@14"	4@14"	4@14"	4@14"	4@14"	4@14"	4@14"	4@14"	4@14"	4@14"	4@14"
	LENGTH, h	3'-6.5"	3'-6.5"	3'-6.5"	3'-6.5"	3'-6.5"	3'-6.5"	3'-6.5"	3'-6.5"	3'-6.5"	3'-6.5"	3'-6.5"	3'-6.5"	3'-6.5"	3'-6.5"	3'-6.5"	3'-6.5"	3'-6.5"	3'-6.5"	3'-6.5"	3'-6.5"
H BARS	BAR NO. & SPACING	4@11"	4@11"	4@10"	4@13"	4@14"	4@14"	4@14"	4@13"	4@14"	4@14"	4@14"	4@14"	4@14"	4@14"	4@14"	4@14"	4@14"	4@14"	4@14"	4@14"
	LENGTH, h	3'-6.5"	3'-6.5"	3'-6.5"	3'-6.5"	3'-6.5"	3'-6.5"	3'-6.5"	3'-6.5"	3'-6.5"	3'-6.5"	3'-6.5"	3'-6.5"	3'-6.5"	3'-6.5"	3'-6.5"	3'-6.5"	3'-6.5"	3'-6.5"	3'-6.5"	3'-6.5"
LONGITUDINAL REINFORCEMENT																					
NO. 4 LONG. BARS	NUMBER IN TOP SLAB	19	19	19	13	13	13	13	13	13	13	13	13	13	13	13	13	13	13	13	13
	NUMBER IN BOTTOM SLAB	13	13	13	13	13	13	13	13	13	13	13	13	13	13	13	13	13	13	13	13
	NUMBER IN WALLS	20	20	20	20	20	20	20	20	20	20	20	20	20	20	20	20	20	20	20	20
	TOTAL NUMBER	52	52	52	46	46	46	46	46	46	46	46	46	46	46	46	46	46	46	46	46
CONCRETE: CU. YDS. PER LIN. FT.		0.80	0.80	0.80	0.79	0.79	0.79	0.80	0.82	0.84	0.86	0.86	0.87	0.89	0.91	0.93	0.95	0.96	0.98	1.00	1.01
STEEL: LBS. PER LIN. FT.		121.33	120.67	123.8	96.2	100.7	103.2	106.1	109.4	108.4	109.0	108.7	109.6	111.8	113.1	114.9	116.0	117.2	116.9	117.7	118.2

HYDRAULIC PROPERTIES (BOX)

n = .013

Area =

$K = Q/S^{\frac{1}{2}} = \frac{1.486}{n} AR^{\frac{2}{3}} = 10{,}685$

DRAWN BY	REVISIONS		
G.D.M.	MARK	DATE	DESCRIPTION
CHECKED BY R.J.S.			
DESIGNED BY V.C.M.			
SUBMITTED BY C.W.H			

SUPERSEDES DWG NO. 2-D236.7 DATED APR. '57

LOS ANGELES COUNTY
FLOOD CONTROL DISTRICT

DESIGN TABLE
FOR
R. C. BOX CONDUITS

RECOMMENDED BY D. J. Mulne DIVISION ENGINEER DESIGN

APPROVAL RECOMMENDED BY C. Magnuson ASS'T CHIEF DEPUTY ENGINEER

APPROVED BY A. E. Bennington 1/5/70 CHIEF ENGINEER

SCALE	DATE	DWG. NO. 2-D236.7
NONE	1-1-71	SHEET 7 OF 14

BOX SIZE: W = 7'-6", H = 9'-0" DIAMETER OF HYDRAULICALLY EQUIVALENT PIPE = 108"

		DEPTH OF COVER IN FEET																			
		1	2	2'-11"	4	5	6	7	8	9	10	11	12	13	14	15	16	17	18	19	20
TOP SLAB THICKNESS, t_1		7.00	7.00	7.00	6.50	6.50	6.50	6.75	7.00	7.50	8.00	7.75	8.25	8.50	8.75	9.25	9.50	10.00	10.25	10.75	11.00
SIDE WALL THICKNESS, t_2		8.00	8.00	8.00	8.00	8.00	8.00	8.00	8.00	8.00	8.00	8.00	8.00	8.00	8.00	8.00	8.00	8.00	8.00	8.00	8.25
BOTTOM SLAB THICKNESS, t_3		7.00	7.00	7.00	7.00	7.00	7.25	7.75	8.00	8.50	8.75	8.75	9.25	9.50	10.00	10.25	10.75	11.00	11.25	11.75	12.00
TRANSVERSE REINFORCEMENT																					
B BARS	BAR NO. & SPACING	5@14"	5@14"	5@14"	5@11"	7@19"	7@18"	7@17"	8@20"	6@11"	8@19"	6@11"	8@19	8@18"	7@13"	9@20"	9@20"	9@19"	8@14"	8@14"	9@16"
	LENGTH, h	8'-7"	8'-7"	8'-7"	8'-7"	8'-7"	8'-7"	8'-7"	8'-7"	8'-7"	8'-7"	8'-7"	8'-7"	8'-7"	8'-7"	8'-7"	8'-7"	8'-7"	8'-7"	8'-7"	8'-7.5"
B_1 BARS	BAR NO. & SPACING	8@14"	8@14"	8@14"	4@11"	5@19"	5@18"	5@17"	5@20"	4@11"	5@19"	4@11"	5@19"	5@18"	4@13	5@20"	5@20"	5@19"	4@14"	4@14"	4@16"
	LENGTH, h	8'-7"	8'-7"	8'-7"	5'-1"	4'-10"	4'-10"	4'-10"	4'-7.5"	4'-9"	4'-10.5"	4'-9"	4'-11"	4'-11"	4'-10.5"	4'-9"	4'-11.5"	4'-11"	4'-7.5"	4'-10.5"	4'-3"
C BARS	BAR NO. & SPACING	4@10"	4@10"	4@9"	4@14"	4@14"	4@13"	4@12"	4@13"	4@13"	4@13"	4@13"	4@14"	4@14"	4@14"	4@14"	4@14"	4@14"	4@14"	4@14"	4@14"
	HORIZ. LENGTH, h	3'-7"	3'-7"	3'-7"	3'-7"	3'-7"	3'-7"	3'-7"	3'-7"	3'-7"	3'-7"	3'-7"	3'-7"	3'-7"	3'-7"	3'-7"	3'-7"	3'-7"	3'-7"	3'-7"	3'-7.5"
	VERT. LENGTH, v	9'-0"	9'-0"	9'-0"	8'-11.5"	8'-11.5"	8'-11.5"	9'-0"	9'-0"	9'-0.5"	9'-1"	9'-1"	9'-1.5"	9'-1.5"	9'-2"	9'-2.5"	9'-2.5"	9'-3"	9'-3.5"	9'-4"	9'-4"
C_1 BARS	BAR NO. & SPACING	4@10"	4@10"	4@9"	5@14"	5@14"	5@13"	5@12"	5@13"	5@13"	5@13"	5@13"	5@14"	5@14"	5@14"	5@14"	5@14"	5@14"	5@14"	5@14"	5@14"
	HORIZ. LENGTH, h	1'-8	1'-7.5"	1'-6.5"	1'-6.5"	1'-7"	1'-7"	1'-7"	1'-7"	1'-6.5"	1'-6.5"	1'-6.5"	1'-7"	1'-7.5"	1'-7.5"	1'-8"	1'-8"	1'-8.5"	1'-8.5"	1'-9"	1'-9.5"
	VERT. LENGTH, v	3'-11.5"	3'-3.5"	2'-0"	2'-2"	2'-3"	2'-0.5"	1'-10.5"	2'-0"	1'-11"	1'-10.5"	1'-10"	1'-11"	1'-11"	1'-11.5"	1'-11.5"	1'-11.5"	2'-0"	2'-0"	2'-0"	2'-0"
C_2 BARS	BAR NO. & SPACING	4@10"	4@10"	4@9"	4@14"	4@14"	5@13"	4@12"	4@13"	4@13"	4@13"	4@13"	4@14"	4@14"	4@14"	4@14"	4@14"	4@14"	4@14"	4@14"	4@14"
	HORIZ. LENGTH, h	3'-7"	3'-7"	3'-7"	3'-7"	3'-7"	3'-10.5"	3'-7"	3'-7"	3'-7"	3'-7"	3'-7"	3'-7"	3'-7"	3'-7"	3'-7"	3'-7"	3'-7"	3'-7"	3'-7"	3'-7.5"
	VERT. LENGTH, v	2'-0"	2'-0"	2'-0"	2'-0"	2'-0"	2'-0.5"	2'-1"	2'-1"	2'-1.5"	2'-2"	2'-2"	2'-2.5"	2'-2.5"	2'-3"	2'-3.5"	2'-4"	2'-4"	2'-4.5"	2'-5"	2'-5"
C_3 BARS	BAR NO. & SPACING	4@10"	4@10"	4@9"	5@14"	5@14"	5@13"	5@12"	5@13"	5@13"	5@13"	5@13"	5@14"	5@14"	5@14"	5@14"	5@14"	5@14"	5@14"	5@14"	5@14"
	HORIZ. LENGTH, h	1'-3"	1'-3.5"	1'-3.5"	1'-7.5"	1'-7.5"	1'-5"	1'-6.5"	1'-7"	1'-7"	1'-7.5"	1'-7.5"	1'-8"	1'-8"	1'-8.5"	1'-8.5"	1'-9"	1'-9.5"	1'-9.5"	1'-10"	1'-10.5"
	VERT. LENGTH, v	2'-0"	2'-0"	2'-0"	2'-1.5"	2'-6.5"	1'-3"	1'-9.5"	1'-10"	1'-10"	1'-10"	1'-10"	1'-11"	1'-10.5"	1'-11"	1'-11"	1'-10.5"	1'-10.5"	1'-10.5"	1'-10.5"	1'-11"
D BARS	BAR NO. & SPACING	4@14"	4@15"	4@15"	4@15"	4@15"	4@15"	4@16"	4@16"	4@17"	4@17"	4@17"	4@17"	4@18"	4@18"	4@18"	4@18"	4@18"	4@18"	4@18"	4 18"
	LENGTH, v	9'-10.5"	9'-10.5"	9'-10.5"	9'-10.5"	9'-10.5"	9'-10.5"	9'-11.5"	10'-0"	10'-1"	10'-1.5"	10'-1.5"	10'-2.5"	10'-3"	10'-4"	10'-4.5"	10'-5.5"	10'-6"	10'-6.5"	10'-7.5"	10'-8"
F BARS	BAR NO. & SPACING	4@11"	5@15"	5@11"	6@15"	8@20"	8@18"	8@18"	7@13"	8@17"	8@15"	9@20"	7@12"	9@19"	8@14"	9@16"	9@16"	9@16"	8@13"	9@15"	9@15"
	LENGTH, h	8'-7"	8'-7	8'-7"	8'-7"	8'-7"	8'-7"	8'-7"	8'-7"	8'-7"	8'-7"	8'-7"	8'-7"	8'-7"	8'-7"	8'-7"	8'-7"	8'-7"	8'-7"	8'-7"	8'-7.5"
F_1 BARS	BAR NO. & SPACING	4@11"	5@15"	4@11"	5@15"	5@20"	5@18"	5@18"	4@13"	5@17"	4@15"	5@20"	4@12"	5@19"	4@14"	4@16"	4@16"	4@16"	4@13"	4@15"	4@15"
	LENGTH, h	6'-6.5"	6'-4.5"	5'-7.5"	5'-7"	4'-9.5"	4'-8.5"	4'-11.5"	4'-11"	5'-1.5"	4'-9"	4'-11.5"	5'-1.5"	5'-1.5"	4'-11.5"	4'-4.5"	4'-7.5"	4'-10"	5'-3"	4'-8.5"	4'-10.5"
G BARS	BAR NO. & SPACING	4@10"	4@10"	4@9"	4@14"	4@14"	4@13"	4@12"	4@13"	4@13"	4@13"	4@13"	4@14"	4@14"	4@14"	4@14"	4@14"	4@14"	4@14"	4@14"	4@14"
	LENGTH, h	3'-9"	3'-9"	3'-9"	3'-9"	3'-9"	3'-9"	3'-9"	3'-9"	3'-9"	3'-9"	3'-9"	3'-9"	3'-9"	3'-9"	3'-9"	3'-9"	3'-9"	3'-9"	3'-9"	3'-9"
H BARS	BAR NO. & SPACING	4@10"	4@10"	4@9"	4@14"	4@14"	5@13"	4@12"	4@13"	4@13"	4@13"	4@13"	4@14"	4@14"	4@14"	4@14	4@14"	4@14"	4@14"	4@14"	4@14"
	LENGTH, h	3'-9"	3'-9"	3'-9"	3'-9"	3'-9"	3'-9"	3'-9"	3'-9"	3'-9"	3'-9"	3'-9"	3'-9"	3'-9"	3'-9"	3'-9"	3'-9"	3'-9"	3'-9"	3'-9"	3'-9"
LONGITUDINAL REINFORCEMENT																					
NO. 4 LONG. BARS	NUMBER IN TOP SLAB	20	20	20	14	14	14	14	14	14	14	14	14	14	14	14	14	14	14	14	14
	NUMBER IN BOTTOM SLAB	14	14	14	14	14	14	14	14	14	14	14	14	14	14	14	14	14	14	14	14
	NUMBER IN WALLS	24	24	24	24	24	24	24	24	24	24	24	24	24	24	24	24	24	24	24	24
	TOTAL NUMBER	58	58	58	52	52	52	52	52	52	52	52	52	52	52	52	52	52	52	52	52
CONCRETE: CU. YDS. PER LIN. FT.		0.85	0.85	0.85	0.83	0.83	0.84	0.86	0.87	0.90	0.92	0.92	0.94	0.96	0.98	1.00	1.02	1.04	1.05	1.08	1.11
STEEL: LBS. PER LIN. FT.		137.7	137.3	141.6	112.0	115.5	123.6	122.7	121.1	122.1	123.3	122.6	121.0	122.3	123.9	126.8	127.2	128.6	129.7	131.5	133.5

HYDRAULIC PROPERTIES (BOX)

n = .013

Area = 59.7 sq. ft.

$K = Q/S^{\frac{1}{2}} = \frac{1.486}{n} AR^{\frac{2}{3}} = 12,452$

DRAWN BY	REVISIONS		
A.E.	MARK	DATE	DESCRIPTION
CHECKED BY R.J.S.			
DESIGNED BY V.C.M.			
SUBMITTED BY C.W.H.			

SUPERSEDES DWG. NO 2-D236B DATED APR '57

LOS ANGELES COUNTY
FLOOD CONTROL DISTRICT

DESIGN TABLE
FOR
R. C. BOX CONDUITS

RECOMMENDED BY: L. W. Smith — DIVISION ENGINEER (DESIGN)

APPROVAL RECOMMENDED BY: C. Magness — ASS'T CHIEF DEPUTY ENGINEER

APPROVED BY: A. E. Bennington 1-5-70 — CHIEF ENGINEER

SCALE	DATE	DWG. NO. 2-D236.8
NONE	1-1-71	SHEET 8 OF 14

BOX SIZE: W = 8.00 , H = 9.50 DIAMETER OF HYDRAULICALLY EQUIVALENT PIPE = 114" R.C.P.

		DEPTH OF COVER IN FEET																			
		1	2	2'-11"	4	5	6	7	8	9	10	11	12	13	14	15	16	17	18	19	20
TOP SLAB THICKNESS, t_1		7.50	7.50	7.50	6.50	6.50	6.75	7.00	7.50	8.00	8.25	8.00	8.50	8.75	9.25	9.75	10.00	10.50	10.75	11.25	11.50
SIDE WALL THICKNESS, t_2		8.00	8.00	8.00	8.00	8.00	8.00	8.00	8.00	8.00	8.00	8.00	8.00	8.00	8.00	8.00	8.00	8.00	8.25	8.50	8.75
BOTTOM SLAB THICKNESS, t_3		7.00	7.00	7.00	7.50	7.50	7.50	8.00	8.50	9.00	9.25	9.25	9.75	10.00	10.50	10.75	11.25	11.50	12.00	12.25	12.75
TRANSVERSE REINFORCEMENT																					
B BARS	BAR NO. & SPACING	5 @ 14"	5 @ 14"	9 @ 14"	6 @ 15"	7 @ 17"	7 @ 16"	6 @ 11"	8 @ 18"	8 @ 18"	6 @ 10"	8 @ 18"	6 @ 10"	9 @ 20"	7 @ 12"	9 @ 19"	8 @ 14"	9 @ 18"	9 @ 16"	9 @ 16"	8 @ 13"
	LENGTH, h	9'-1"	9'-1"	9'-1"	9'-1"	9'-1"	9'-1"	9'-1"	9'-1"	9'-1"	9'-1"	9'-1"	9'-1"	9'-1"	9'-1"	9'-1"	9'-1"	9'-1"	9'-1.5"	9'-2"	9'-2.5"
B_1 BARS	BAR NO. & SPACING	8 @ 14"	8 @ 14"	4 @ 14"	5 @ 15"	5 @ 17"	5 @ 16"	4 @ 11"	5 @ 18"	5 @ 18"	4 @ 10"	5 @ 18"	4 @ 10"	5 @ 20"	4 @ 12"	5 @ 19"	4 @ 14"	5 @ 18"	4 @ 16"	4 @ 16"	4 @ 13"
	LENGTH, h	9'-1"	9'-1"	2'-3.5"	5'-5.5"	5'-0"	5'-0.5"	4'-11.5"	4'-10.5"	5'-1"	5'-3"	5'-0.5"	5'-3"	5'-0"	5'-2.5"	5'-2.5"	5'-0"	5'-4.5	4'-8"	4'-11"	5'-4"
C BARS	BAR NO. & SPACING	5 @ 14"	5 @ 14"	4 @ 11"	4 @ 13"	4 @ 12"	4 @ 11"	4 @ 12"	4 @ 14"	4 @ 14"	4 @ 13"	4 @ 13"	4 @ 13"	4 @ 13"	4 @ 13"	4 @ 13"	4 @ 13"	4 @ 13"	4 @ 13"	4 @ 13"	4 @ 13"
	HORIZ. LENGTH, h	4'-0"	4'-0"	3'-8.5"	3'-8.5"	3'-8.5"	3'-8.5"	3'-8.5"	3'-8.5"	3'-8.5"	3'-8.5"	3'-8.5"	3'-8.5"	3'-8.5"	3'-8.5"	3'-8.5"	3'-8.5"	3'-8.5"	3'-9"	3'-9"	3'-9.5"
	VERT. LENGTH, v	9'-6.5"	9'-6.5"	9'-6.5"	9'-5.5"	9'-5.5"	9'-6"	9'-6"	9'-6.5"	9'-7"	9'-7.5"	9'-7"	9'-7.5"	9'-8"	9'-8.5"	9'-9"	9'-9"	9'-9.5"	9'-10"	9'-10.5"	9'-10.5"
C_1 BARS	BAR NO. & SPACING	4 @ 14"	4 @ 14"	4 @ 11"	5 @ 13"	5 @ 12"	5 @ 11"	5 @ 12"	6 @ 14"	6 @ 14"	5 @ 13"	5 @ 13"	5 @ 13"	5 @ 13"	5 @ 13"	5 @ 13"	5 @ 13"	5 @ 13"	5 @ 13"	5 @ 13"	5 @ 13"
	HORIZ. LENGTH, h	1'-6.5"	1'-6"	1'-8"	1'-8"	1'-8"	1'-8"	1'-8"	1'-8.5"	1'-8"	1'-7.5"	1'-7.5"	1'-8"	1'-8"	1'-8.5"	1'-9"	1'-9"	1'-9.5"	1'-10"	1'-10.5"	1'-11"
	VERT. LENGTH, v	1'-11"	1'-11.5"	3'-10.5"	2'-9.5"	2'-4"	2'-1.5"	2'-2.5"	2'-5.5"	2'-4.5"	2'-0.5"	2'-0"	2'-0"	2'-0.5"	2'-0.5"	2'-1"	2'-1"	2'-1"	2'-1.5"	2'-1.5"	2'-2"
C_2 BARS	BAR NO. & SPACING	4 @ 14"	4 @ 14"	4 @ 11"	4 @ 13"	4 @ 12"	4 @ 11"	4 @ 12"	4 @ 14"	4 @ 14"	4 @ 13"	4 @ 13"	4 @ 13"	4 @ 13"	4 @ 13"	4 @ 13"	4 @ 13"	4 @ 13"	4 @ 13"	4 @ 13"	4 @ 13"
	HORIZ. LENGTH, h	3'-8.5"	3'-8.5"	3'-8.5"	3'-8.5"	3'-8.5"	3'-8.5"	3'-8.5"	3'-8.5"	3'-8.5"	3'-8.5"	3'-8.5"	3'-8.5"	3'-8.5"	3'-8.5"	3'-8.5"	3'-8.5"	3'-8.5"	3'-9"	3'-9"	3'-9.5"
	VERT. LENGTH, v	2'-0"	2'-0"	2'-0"	2'-0.5"	2'-0.5"	2'-0.5"	2'-1"	2'-1.5"	2'-2"	2'-2.5"	2'-2.5"	2'-3"	2'-3"	2'-3.5"	2'-4"	2'-4.5"	2'-4.5"	2'-5"	2'-5.5"	2'-6"
C_3 BARS	BAR NO. & SPACING	4 @ 14"	5 @ 14"	4 @ 11"	5 @ 13"	5 @ 12"	5 @ 11"	5 @ 12"	6 @ 14"	6 @ 14"	5 @ 13"	5 @ 13"	5 @ 13"	5 @ 13"	5 @ 13"	5 @ 13"	5 @ 13"	5 @ 13"	5 @ 13"	5 @ 13"	5 @ 13"
	HORIZ. LENGTH, h	1'-9.5"	1'-9"	1'-7.5"	1'-8"	1'-8"	1'-7.5"	1'-8"	1'-8.5"	1'-9"	1'-9"	1'-9"	1'-9"	1'-9.5"	1'-9.5"	1'-10"	1'-10"	1'-10.5"	1'-11"	1'-11.5"	2'-0"
	VERT. LENGTH, v	2'-0"	2'-0"	1'-4.5"	1'-10.5"	1'-11"	1'-11"	2'-1"	2'-4"	2'-1.5"	2'-0"	2'-0"	1'-11.5"	1'-11.5"	1'-11.5"	1'-11.5"	1'-11.5"	1'-11.5"	2'-0"	2'-0"	2'-0.5"
D BARS	BAR NO. & SPACING	4 @ 13"	4 @ 13"	4 @ 13"	4 @ 13"	4 @ 13"	4 @ 13"	4 @ 13"	4 @ 14"	4 @ 14"	4 @ 15"	4 @ 14"	4 @ 15"	4 @ 15"	4 @ 16"	4 @ 16"	4 @ 16"	4 @ 17"	4 @ 17"	4 @ 18"	4 @ 18"
	LENGTH, v	10'-5.5"	10'-5.5"	10'-5.5"	10'-5"	10'-5"	10'-5"	10'-6"	10'-7"	10'-8"	10'-8.5"	10'-8.5"	10'-9"	10'-10"	10'-10.5"	10'-11.5"	11'-0.5"	11'-1"	11'-2"	11'-2.5	11'-3.5"
F BARS	BAR NO. & SPACING	4 @ 10"	6 @ 20"	6 @ 15"	6 @ 14"	6 @ 11"	8 @ 17"	9 @ 20"	8 @ 16"	9 @ 19"	9 @ 18"	8 @ 14"	9 @ 18"	9 @ 16"	8 @ 13"	7 @ 10"	9 @ 15"	8 @ 12"	8 @ 12"	9 @ 14"	9 @ 14"
	LENGTH, h	9'-1"	9'-1"	9'-1"	9'-1"	9'-1"	9'-1"	9'-1"	9'-1"	9'-1"	9'-1"	9'-1"	9'-1"	9'-1"	9'-1"	9'-1"	9'-1"	9'-1"	9'-1.5"	9'-2"	9'-2.5"
F_1 BARS	BAR NO. & SPACING	4 @ 10"	6 @ 20"	5 @ 15"	5 @ 14"	4 @ 11"	5 @ 17"	5 @ 20"	5 @ 16"	5 @ 19"	5 @ 18"	4 @ 14"	5 @ 18"	4 @ 16"	4 @ 13"	4 @ 10"	4 @ 15"	4 @ 12"	4 @ 12"	4 @ 14"	4 @ 14"
	LENGTH, h	6'-9"	6'-7.5"	5'-11.5"	6'-0.5"	5'-4.5"	5'-1.5"	5'-0.5"	5'-4"	5'-3.5"	5'-3"	5'-0"	5'-4.5"	4'-9.5"	5'-3.5"	5'-6"	5'-0"	5'-3.5"	5'-6.5"	4'-11.5"	5'-2.5"
G BARS	BAR NO. & SPACING	5 @ 14"	5 @ 14"	4 @ 11"	4 @ 13"	4 @ 12"	4 @ 11"	4 @ 12"	4 @ 14"	4 @ 14"	4 @ 13"	4 @ 13"	4 @ 13"	4 @ 13"	4 @ 13"	4 @ 13"	4 @ 13"	4 @ 13"	4 @ 13"	4 @ 13"	4 @ 13"
	LENGTH, h	4'-0"	4'-0"	4'-0"	4'-0"	4'-0"	4'-0"	4'-0"	4'-0"	4'-0"	4'-0"	4'-0"	4'-0"	4'-0"	4'-0"	4'-0"	4'-0"	4'-0"	4'-0"	4'-0"	4'-0"
H BARS	BAR NO. & SPACING	4 @ 14"	4 @ 14"	4 @ 11"	4 @ 13"	4 @ 12"	4 @ 11"	4 @ 12"	4 @ 14"	4 @ 14"	4 @ 13"	4 @ 13"	4 @ 13"	4 @ 13"	4 @ 13"	4 @ 13"	4 @ 13"	4 @ 13"	4 @ 13"	4 @ 13"	4 @ 13"
	LENGTH, h	4'-0"	4'-0"	4'-0"	4'-0"	4'-0"	4'-0"	4'-0"	4'-0"	4'-0"	4'-0"	4'-0"	4'-0"	4'-0"	4'-0"	4'-0"	4'-0"	4'-0"	4'-0"	4'-0"	4'-0"
LONGITUDINAL REINFORCEMENT																					
NO. 4 LONG. BARS	NUMBER IN TOP SLAB	20	20	21	14	14	14	14	14	14	14	14	14	14	14	14	14	14	14	14	14
	NUMBER IN BOTTOM SLAB	14	14	14	14	14	14	14	14	14	14	14	14	14	14	14	14	14	14	14	14
	NUMBER IN WALLS	24	24	24	24	24	24	24	24	24	24	24	24	24	24	24	24	24	24	24	24
	TOTAL NUMBER	58	58	59	52	52	52	52	52	52	52	52	52	52	52	52	52	52	52	52	52
CONCRETE: CU. YDS. PER LIN. FT.		0.91	0.91	0.91	0.89	0.89	0.90	0.92	0.95	0.98	0.99	0.99	1.02	1.03	1.06	1.08	1.10	1.12	1.16	1.20	1.24
STEEL: LBS. PER LIN. FT.		138.13	141.93	141.6	123.73	129.4	136.2	134.2	136.1	136.2	133.6	132.9	133.8	136.2	136.5	138.6	140.2	140.9	142.8	144.2	145.1

HYDRAULIC PROPERTIES (BOX)

n = .013

Area = 75.4 sq. ft.

$K = Q/S^{\frac{1}{2}} = \frac{1.486}{n} AR^{\frac{2}{3}} = 14{,}598$

DRAWN BY	REVISIONS		
S.Y.H.	MARK	DATE	DESCRIPTION
CHECKED BY D.O.			
DESIGNED BY V.C.M.			
SUBMITTED BY C.W.H.			

SUPERSEDES DWG NO 2-D236 9 DATED APR.'57

LOS ANGELES COUNTY
FLOOD CONTROL DISTRICT

DESIGN TABLE
FOR
R. C. BOX CONDUITS

RECOMMENDED BY: DIVISION ENGINEER (DESIGN)
APPROVAL RECOMMENDED BY: ASS'T CHIEF DEPUTY ENGINEER
APPROVED BY: CHIEF ENGINEER 1/5/70

SCALE	DATE	DWG. NO. 2-D236.9
NONE	1-1-71	SHEET 9 OF 14

BOX SIZE: W = 8'-5" , H = 10'-0" DIAMETER OF HYDRAULICALLY EQUIVALENT PIPE = 120"

		DEPTH OF COVER IN FEET																			
		1	2	2'-11"	4	5	6	7	8	9	10	11	12	13	14	15	16	17	18	19	20
TOP SLAB THICKNESS, t_1		7.75	7.75	7.75	6.50	6.75	7.00	7.25	7.75	8.25	8.75	8.50	9.00	9.50	9.75	10.00	10.50	11.00	11.25	11.75	12.00
SIDE WALL THICKNESS, t_2		8.00	8.00	8.00	8.00	8.00	8.00	8.00	8.00	8.00	8.00	8.00	8.00	8.00	8.00	8.00	8.25	8.50	8.50	8.75	9.00
BOTTOM SLAB THICKNESS, t_3		7.00	7.00	7.00	7.25	7.75	7.75	8.25	8.75	9.25	9.75	9.50	10.25	10.50	10.75	11.25	11.75	12.00	12.50	13.00	13.25
TRANSVERSE REINFORCEMENT																					
B BARS	BAR NO. & SPACING	6@13"	9@13"	9@14"	5@9"	7@16"	7@15"	7@13"	6@10"	9@20"	7@12"	8@17"	7@12"	8@16"	9@18"	7@11"	9@16"	8@13"	7@10"	9@15"	8@12"
	LENGTH, h	9'-6.5"	9'-6.5"	9'-6.5"	9'-6.5"	9'-6.5"	9'-6.5"	9'-6.5"	9'-6.5"	9'-6.5"	9'-6.5"	9'-6.5"	9'-6.5"	9'-6.5"	9'-6.5"	9'-6.5"	9'-6.5"	9'-7"	9'-7"	9'-7.5"	9'-8"
B_1 BARS	BAR NO. & SPACING	7@13"	4@13"	4@14"	4@9"	5@16"	5@15"	4@13"	4@10"	5@20"	4@12"	5@17"	4@12"	5@16"	5@18"	4@11"	4@16"	4@13"	4@10"	4@15"	4@12"
	LENGTH, h	9'-6.5"	2'-1"	2'-8.5"	5'-6.5"	5'-3.5"	5'-3.5"	4'-11.5"	5'-4.5"	5'-1"	5'-3"	5'-4.5"	5'-3"	5'-7.5"	5'-3.5"	5'-6.5"	4'-10.5"	5'-4.5"	5'-7"	5'-0.5"	5'-4"
C BARS	BAR NO. & SPACING	5@14"	5@14"	4@10"	4@11"	4@11"	4@11"	4@13"	4@13"	4@14"	4@14"	4@14"	4@12"	4@14"	4@14"	4@14"	4@14"	4@14"	4@14"	4@14"	4@14"
	HORIZ. LENGTH, h	4'-1.5"	4'-1.5"	3'-10"	3'-10"	3'-10"	3'-10"	3'-10"	3'-10"	3'-10"	3'-10"	3'-10"	3'-10"	3'-10"	3'-10"	3'-10"	3'-10"	3'-10.5"	3'-10.5"	3'-10.5"	3'-11"
	VERT. LENGTH, v	10'-1"	10'-1"	10'-1"	9'-11.5"	10'-0"	10'-0"	10'-0.5"	10'-1"	10'-1.5"	10'-2"	10'-1.5"	10'-2"	10'-2.5"	10'-3"	10'-3"	10'-3.5"	10'-4"	10'-4.5"	10'-5"	10'-5"
C_1 BARS	BAR NO. & SPACING	4@14"	4@14"	4@10"	5@11"	5@11"	5@11"	6@13"	6@13"	6@14"	6@14"	6@14"	5@12"	6@14"	6@14"	6@14"	6@14"	6@14"	6@14"	6@14"	6@14"
	HORIZ. LENGTH, h	1'-8"	1'-7"	1'-8.5"	1'-8.5"	1'-8.5"	1'-9"	1'-9.5"	1'-9"	1'-9"	1'-9.5"	1'-9"	1'-8.5"	1'-10"	1'-10"	1'-10.5"	1'-11"	1'-11.5"	2'-0"	2'-0.5"	2'-1"
	VERT. LENGTH, v	2'-0.5"	2'-1"	3'-3.5"	2'-8"	2'-3.5"	2'-5.5"	2'-8.5"	2'-5.5"	2'-6.5"	2'-6.5"	2'-6"	2'-1"	2'-5.5"	2'-6.5"	2'-5.5"	2'-4.5"	2'-3.5	2'-3.5"	2'-4"	2'-4"
C_2 BARS	BAR NO. & SPACING	4@14"	4@14"	4@10"	4@11"	4@11"	4@11"	4@13"	4@13"	4@14"	4@14"	4@14"	4@12"	4@14"	4@14"	4@14"	4@14"	4@14"	4@14"	4@14"	4@14"
	HORIZ. LENGTH, h	3'-10"	3'-10"	3'-10"	3'-10"	3'-10"	3'-10"	3'-10"	3'-10"	3'-10"	3'-10"	3'-10"	3'-10"	3'-10"	3'-10"	3'-10"	3'-10"	3'-10.5"	3'-10.5"	3'-10.5"	3'-11"
	VERT. LENGTH, v	2'-0"	2'-0"	2'-0"	2'-0.5"	2'-1"	2'-1"	2'-1.5"	2'-2"	2'-2.5"	2'-3"	2'-2.5"	2'-3.5"	2'-3.5"	2'-4"	2'-4.5"	2'-5"	2'-5"	2'-5.5"	2'-6"	2'-6.5"
C_3 BARS	BAR NO. & SPACING	5@14"	5@14"	4@10"	5@11"	5@11"	5@11"	6@13"	6@13"	6@14"	6@14"	6@14"	5@12"	6@14"	6@14"	6@14"	6@14"	6@14"	6@14"	6@14"	6@14"
	HORIZ. LENGTH, h	2'-0.5"	1'-11"	1'-8.5"	1'-9"	1'-8.5"	1'-9"	1'-10"	1'-9.5"	1'-10.5"	1'-10.5"	1'-10.5"	1'-10"	1'-11.5"	1'-11.5"	2'-0"	2'-0.5"	2'-0.5"	2'-1"	2'-1.5"	2'-2"
	VERT. LENGTH, v	2'-0"	2'-0"	1'-5.5"	2'-7.5"	1'-10.5"	2'-1.5"	2'-8"	2'-3.5"	2'-4"	2'-1.5"	2'-3.5"	2'-0"	2'-1.5"	2'-1"	2'-1"	2'-1.5"	2'-2"	2'-2"	2'-2.5"	2'-2.5"
D BARS	BAR NO. & SPACING	4@11"	4@11"	4@11"	4@11"	4@11"	4@11"	4@12"	4@12"	4@12"	4@13"	4@13"	4@13"	4@13"	4@13"	4@14"	4@14"	4@14"	4@15"	4@15"	4@16"	4@17"
	LENGTH, v	10'-11.5"	10'-11.5"	10'-11.5"	10'-11"	10'-11.5"	10'-11.5"	11'-0.5"	11'-1.5"	11'-2.5"	11'-3.5"	11'-3"	11'-4"	11'-5"	11'-5.5"	11'-6.5"	11'-7"	11'-8"	11'-9"	11'-9.5"	11'-10.5"
F BARS	BAR NO. & SPACING	5@12"	4@8"	6@14"	7@15"	8@19"	8@16"	8@14"	7@11"	9@16"	8@13"	8@13"	8@13"	9@15"	8@12"	8@12"	9@14"	9@14"	8@11"	8@11"	8@11"
	LENGTH, h	9'-6.5"	9'-6.5"	9'-6.5"	9'-6.5"	9'-6.5"	9'-6.5"	9'-6.5"	9'-6.5"	9'-6.5"	9'-6.5"	9'-6.5"	9'-6.5"	9'-6.5"	9'-6.5"	9'-6.5"	9'-6.5"	9'-7"	9'-7"	9'-7.5"	9'-8"
F_1 BARS	BAR NO. & SPACING	4@12"	4@8"	5@14"	5@15"	6@19'	5@16"	4@14"	4@11"	4@16"	4@13"	4@13"	4@13"	4@15"	4@12"	4@12"	4@14	4@14'	4@11"	4@11"	4@11"
	LENGTH, h	6'-5"	6'-9.5"	6'-2.5"	5'-8.5"	5'-10"	5'-4.5"	4'-11.5"	5'-5"	4'-9"	5'-3.5"	5'-2"	5'-5.5"	5'-0"	5'-4.5"	5'-7.5"	5'-1.5"	5'-3.5"	5'-5.5"	5'-8.5"	5'-10.5"
G BARS	BAR NO. & SPACING	5@14"	5@14"	4@10"	4@11"	4@11"	4@11"	4@13"	4@13"	4@14"	4@14"	4@14"	4@12"	4@14"	4@14"	4@14"	4@14"	4@14"	4@14"	4@14"	4@14"
	LENGTH, h	4'-3"	4'-3"	4'-3"	4'-3"	4'-3"	4'-3"	4'-3"	4'-3"	4'-3"	4'-3"	4'-3"	4'-3"	4'-3"	4'-3"	4'-3"	4'-3"	4'-3"	4'-3"	4'-3"	4'-3"
H BARS	BAR NO. & SPACING	4@14"	4@14"	4@10"	4@11"	4@11"	4@11"	4@13"	4@13"	4@14"	4@14"	4@14"	4@12"	4@14"	4@14"	4@14"	4@14"	4@14"	4@14"	4@14"	4@14"
	LENGTH, h	4'-3"	4'-3"	4'-3"	4'-3"	4'-3"	4'-3"	4'-3"	4'-3"	4'-3"	4'-3"	4'-3"	4'-3"	4'-3"	4'-3"	4'-3"	4'-3"	4'-3"	4'-3"	4'-3"	4'-3"
LONGITUDINAL REINFORCEMENT																					
NO. 4 LONG. BARS	NUMBER IN TOP SLAB	22	24	23	15	15	15	15	15	15	15	15	15	15	15	15	15	15	15	15	15
	NUMBER IN BOTTOM SLAB	15	15	15	15	15	15	15	15	15	15	15	15	15	15	15	15	15	15	15	15
	NUMBER IN WALLS	24	24	24	24	24	24	24	24	24	24	24	24	24	24	24	24	24	24	24	24
	TOTAL NUMBER	61	63	62	54	54	54	54	54	54	54	54	54	54	54	54	54	54	54	54	54
CONCRETE: CU. YDS. PER LIN. FT.		0.96	0.96	0.96	0.93	0.95	0.96	0.98	1.01	1.04	1.07	1.06	1.10	1.12	1.13	1.16	1.20	1.25	1.27	1.32	1.35
STEEL: LBS. PER LIN. FT.		151.7	154.6	155.6	144.9	144.3	148.4	150.6	150.1	149.3	148.6	147.6	148.1	151.2	153.7	153.2	156.2	156.0	158.7	159.5	160.0

HYDRAULIC PROPERTIES (BOX)

n = .013

Area = 83.6 sq. ft.

$K = Q/S^{\frac{1}{2}} = \frac{1.486}{n} AR^{\frac{2}{3}} = 16{,}726$

DRAWN BY	REVISIONS		
E.E.N	MARK	DATE	DESCRIPTION
CHECKED BY J.O.			
DESIGNED BY V.C.M.			
SUBMITTED BY C.W.H.			

SUPERSEDES DWG NO 2-D236.10 DATED APR '57

LOS ANGELES COUNTY
FLOOD CONTROL DISTRICT

DESIGN TABLE
FOR
R. C. BOX CONDUITS

RECOMMENDED BY: DIVISION ENGINEER DESIGN

APPROVAL RECOMMENDED BY: ASS'T. CHIEF DEPUTY ENGINEER

APPROVED BY: CHIEF ENGINEER

SCALE	DATE	DWG. NO. 2-D236.10
NONE	1-1-71	SHEET 10 OF 14

BOX SIZE: W = 8'-10", H = 10'-6" DIAMETER OF HYDRAULICALLY EQUIVALENT PIPE = 126"

		DEPTH OF COVER IN FEET																			
		1	2	2'-11"	4	5	6	7	8	9	10	11	12	13	14	15	16	17	18	19	20
TOP SLAB THICKNESS, t_1		7.75	8.00	8.00	6.75	6.75	7.25	7.50	8.00	8.50	9.00	8.75	9.25	9.75	10.00	10.50	11.00	11.25	11.75	12.25	12.50
SIDE WALL THICKNESS, t_2		8.00	8.00	8.00	8.00	8.00	8.00	8.00	8.00	8.00	8.00	8.00	8.00	8.00	8.00	8.25	8.50	8.75	9.00	9.00	9.25
BOTTOM SLAB THICKNESS, t_3		7.00	7.00	7.25	7.50	7.75	8.00	8.50	9.00	9.50	10.00	10.00	10.50	10.75	11.25	11.75	12.25	12.50	13.00	13.50	13.75
TRANSVERSE REINFORCEMENT																					
B BARS	BAR NO. & SPACING	5 @ 9"	9 @ 14"	9 @ 14"	7 @ 15"	8 @ 19"	6 @ 10"	7 @ 12"	8 @ 16"	6 @ 9"	8 @ 15"	8 @ 16"	9 @ 20"	8 @ 15"	8 @ 13"	9 @ 17"	7 @ 10"	9 @ 15"	8 @ 12"	9 @ 15"	9 @ 15"
	LENGTH, h	9'-11"	9'-11"	9'-11"	9'-11"	9'-11"	9'-11"	9'-11"	9'-11"	9'-11"	9'-11"	9'-11"	9'-11"	9'-11"	9'-11"	9'-11.5"	10'-00"	10'-0.5"	10'-0.5"	10'-1"	10'-1.5"
B_1 BARS	BAR NO. & SPACING	6 @ 9"	4 @ 14"	4 @ 14"	5 @ 15"	6 @ 19"	4 @ 10"	4 @ 12"	5 @ 16"	4 @ 9"	5 @ 15"	5 @ 16"	6 @ 20"	5 @ 15"	4 @ 13"	5 @ 17"	4 @ 10"	4 @ 15"	4 @ 12"	5 @ 15"	5 @ 15"
	LENGTH, h	9'-11"	3'-0"	3'-1.5"	5'-6"	5'-6.5"	5'-5.5"	5'-1"	5'-5"	5'-8"	5'-7"	5'-7.5"	5'-9.5"	5'-10"	5'-3"	5'-8.5"	5'-9.5"	5'-2"	5'-6.5"	5'-8.5"	5'-10.5"
C BARS	BAR NO. & SPACING	4 @ 9"	4 @ 9"	4 @ 10"	4 @ 10"	4 @ 10"	4 @ 10"	4 @ 12"	4 @ 13"	4 @ 13"	4 @ 13"	4 @ 13"	4 @ 13"	4 @ 13"	4 @ 13"	4 @ 13"	4 @ 13"	4 @ 13"	4 @ 13"	4 @ 13"	4 @ 13"
	HORIZ. LENGTH, h	3'-11"	3'-11"	3'-11"	3'-11"	3'-11"	3'-11"	3'-11"	3'-11"	3'-11"	3'-11"	3'-11"	3'-11"	3'-11"	3'-11"	3'-11.5"	3'-11.5"	4'-0"	4'-0"	4'-0"	4'-0.5"
	VERT. LENGTH, v	10'-7"	10'-7"	10'-7"	10'-6"	10'-6"	10'-6.5"	10'-6.5"	10'-7"	10'-7.5"	10'-8"	10'-8"	10'-8.5"	10'-9"	10'-9"	10'-9.5"	10'-10"	10'-10.5"	10'-11"	10'-11.5"	10'-11.5"
C_1 BARS	BAR NO. & SPACING	4 @ 9"	4 @ 9"	4 @ 10"	5 @ 10"	5 @ 10"	5 @ 10"	6 @ 12"	6 @ 13"	6 @ 13"	6 @ 13"	6 @ 13"	6 @ 13"	6 @ 13"	6 @ 13"	6 @ 13"	6 @ 13"	6 @ 13"	6 @ 13"	6 @ 13"	6 @ 13"
	HORIZ. LENGTH, h	1'-9"	1'-8"	1'-9.5"	1'-9.5"	1'-9.5"	1'-9.5"	1'-10"	1'-10"	1'-10"	1'-10"	1'-10"	1'-10.5"	1'-10.5"	1'-11"	1'-11.5"	2'-0"	2'-0.5"	2'-1"	2'-1.5"	2'-2"
	VERT. LENGTH, v	2'-0"	2'-1"	3'-10.5"	2'-10"	2'-7"	2'-3.5"	2'-8.5"	2'-8"	2'-7"	2'-7"	2'-6.5"	2'-7"	2'-6.5"	2'-7"	2'-6.5"	2'-5.5"	2'-4.5"	2'-5"	2'-5"	2'-5.5"
C_2 BARS	BAR NO. & SPACING	4 @ 9"	4 @ 9"	4 @ 10"	4 @ 10"	4 @ 10"	4 @ 10"	4 @ 12"	4 @ 13"	4 @ 13"	4 @ 13"	4 @ 13"	4 @ 13"	4 @ 13"	4 @ 13"	4 @ 13"	4 @ 13"	4 @ 13"	4 @ 13"	4 @ 13"	4 @ 13"
	HORIZ. LENGTH, h	3'-11"	3'-11"	3'-11"	3'-11"	3'-11"	3'-11"	3'-11"	3'-11"	3'-11"	3'-11"	3'-11"	3'-11"	3'-11"	3'-11"	3'-11.5"	3'-11.5"	4'-0"	4'-0"	4'-0"	4'-0.5"
	VERT. LENGTH, v	2'-0"	2'-0"	2'-0.5"	2'-0.5"	2'-1"	2'-1"	2'-1.5"	2'-2"	2'-2.5"	2'-3"	2'-3"	2'-3.5"	2'-4"	2'-4.5"	2'-5"	2'-5.5"	2'-5.5"	2'-6"	2'-6.5"	2'-7"
C_3 BARS	BAR NO. & SPACING	4 @ 9"	4 @ 9"	5 @ 10"	5 @ 10"	5 @ 10"	5 @ 10"	6 @ 12"	6 @ 13"	6 @ 13"	6 @ 13"	6 @ 13"	6 @ 13"	6 @ 13"	6 @ 13"	6 @ 13"	6 @ 13"	6 @ 13"	6 @ 13"	6 @ 13"	6 @ 13"
	HORIZ. LENGTH, h	1'-8.5"	1'-8.5"	1'-10"	1'-9.5"	1'-10"	1'-10"	1'-11"	1'-11"	1'-11.5"	1'-11.5"	2'-0"	2'-0"	2'-0"	2'-0.5"	2'-1"	2'-1.5"	2'-2"	2'-2.5"	2'-3"	2'-3"
	VERT. LENGTH, v	2'-0"	2'-0"	1'-9"	1'-11"	2'-0.5"	2'-2"	2'-7.5"	2'-6"	2'-3"	2'-2"	2'-2.5"	2'-2"	2'-2"	2'-2	2'-2.5"	2'-3"	2'-3"	2'-3.5"	2'-3.5"	2'-3.5"
D BARS	BAR NO. & SPACING	4 @ 10"	4 @ 10"	4 @ 10"	4 @ 9"	4 @ 9"	4 @ 10"	4 @ 10"	4 @ 10"	4 @ 11"	4 @ 11"	4 @ 11"	4 @ 11"	4 @ 12"	4 @ 12"	4 @ 12"	4 @ 13"	4 @ 13"	4 @ 14"	4 @ 14"	4 @ 15"
	LENGTH, v	11'-6"	11'-6"	11'-6"	11'-5"	11'-5.5"	11'-6"	11'-7"	11'-8"	11'-9"	11'-10"	11'-9.5"	11'-11"	11'-11.5"	12'-0.5"	12'-1"	12'-2"	12'-3"	12'-4"	12'-4.5"	12'-5.5"
F BARS	BAR NO. & SPACING	7 @ 20"	6 @ 17	6 @ 13"	8 @ 19"	9 @ 19"	8 @ 15"	9 @ 16"	9 @ 17"	7 @ 10"	9 @ 16"	7 @ 10"	9 @ 16"	9 @ 15"	9 @ 15"	8 @ 11"	8 @ 11"	8 @ 11"	9 @ 13"	9 @ 13"	8 @ 10"
	LENGTH, h	9'-11"	9'-11"	9'-11"	9'-11"	9'-11"	9'-11"	9'-11"	9'-11"	9'-11"	9'-11"	9'-11"	9'-11"	9'-11"	9'-11"	9'-11.5"	10'-0"	10'-0.5"	10'-0.5"	10'-1"	10'-1.5"
F_1 BARS	BAR NO. & SPACING	5 @ 20"	6 @ 17"	5 @ 13"	6 @ 19"	5 @ 19"	5 @ 15"	4 @ 16"	5 @ 17"	4 @ 10"	5 @ 16"	4 @ 10"	5 @ 16"	5 @ 15"	5 @ 15"	4 @ 11"	4 @ 11"	4 @ 11"	4 @ 13"	4 @ 13"	4 @ 10"
	LENGTH, h	6'-2.5"	7'-1"	6'-5.5"	6'-2"	5'-4.5"	5'-8"	4'-10.5"	5'-8"	5'-8.5"	5'-9"	5'-10.5"	5'-10.5"	5'-9"	5'-11.5"	5'-7"	5'-9.5"	5'-11.5"	5'-6.5"	5'-9"	5'-8"
G BARS	BAR NO. & SPACING	4 @ 9"	4 @ 9"	4 @ 10"	4 @ 10"	4 @ 10"	4 @ 10"	4 @ 12"	4 @ 13"	4 @ 13"	4 @ 13"	4 @ 13"	4 @ 13"	4 @ 13"	4 @ 13"	4 @ 13"	4 @ 13"	4 @ 13"	4 @ 13"	4 @ 13"	4 @ 13"
	LENGTH, h	4'-5"	4'-5"	4'-5"	4'-5"	4'-5"	4'-5"	4'-5"	4'-5"	4'-5"	4'-5"	4'-5"	4'-5"	4'-5"	4'-5"	4'-5"	4'-5"	4'-5"	4'-5"	4'-5"	4'-5"
H BARS	BAR NO. & SPACING	4 @ 9"	4 @ 9"	4 @ 10"	4 @ 10"	4 @ 10"	4 @ 10"	4 @ 12"	4 @ 13"	4 @ 13"	4 @ 13"	4 @ 13"	4 @ 13"	4 @ 13"	4 @ 13"	4 @ 13"	4 @ 13"	4 @ 13"	4 @ 13"	4 @ 13"	4 @ 13"
	LENGTH, h	4'-5"	4'-5"	4'-5"	4'-5"	4'-5"	4'-5"	4'-5"	4'-5"	4'-5"	4'-5"	4'-5"	4'-5"	4'-5"	4'-5"	4'-5"	4'-5"	4'-5"	4'-5"	4'-5"	4'-5"
LONGITUDINAL REINFORCEMENT																					
NO. 4 LONG. BARS	NUMBER IN TOP SLAB	23	23	23	16	16	16	16	16	16	16	16	16	16	16	16	16	16	16	16	16
	NUMBER IN BOTTOM SLAB	16	16	16	16	16	16	16	16	16	16	16	16	16	16	16	16	16	16	16	16
	NUMBER IN WALLS	28	28	28	28	28	28	28	28	28	28	28	28	28	28	28	28	28	28	28	28
	TOTAL NUMBER	67	67	67	60	60	60	60	60	60	60	60	60	60	60	60	60	60	60	60	60
CONCRETE: CU. YDS. PER LIN. FT.		1.00	1.01	1.02	0.99	1.00	1.02	1.04	1.07	1.11	1.14	1.13	1.16	1.18	1.21	1.26	1.31	1.34	1.40	1.43	1.46
STEEL: LBS. PER LIN. FT.		170.3	169.1	171.4	164.3	167.4	166.6	170.2	166.1	165.6	167.5	163.2	167.2	168.6	170.9	172.8	173.4	174.5	176.1	178.3	179.9

HYDRAULIC PROPERTIES (BOX)

n = .013

Area = 92.1 sq. ft.

$K = Q/S^{\frac{1}{2}} = \frac{1.486}{n} AR^{\frac{2}{3}} = 19.026$

DRAWN BY	REVISIONS		
E.E.N.	MARK	DATE	DESCRIPTION
CHECKED BY J.O.			
DESIGNED BY V.C.M.			
SUBMITTED BY C.W.H.			

SUPERSEDES DWG. NO 2-D236.11 DATED APR '57

LOS ANGELES COUNTY FLOOD CONTROL DISTRICT

DESIGN TABLE FOR R. C. BOX CONDUITS

RECOMMENDED BY: DIVISION ENGINEER (DESIGN)

APPROVAL RECOMMENDED BY: ASS'T CHIEF DEPUTY ENGINEER

APPROVED BY: CHIEF ENGINEER 1/5/70

SCALE	DATE	DWG. NO. 2-D236.11
NONE	1-1-71	SHEET 11 OF 14

BOX SIZE: W = 9'-2", H = 11'-0" DIAMETER OF HYDRAULICALLY EQUIVALENT PIPE = 132"

		DEPTH OF COVER IN FEET																			
		1	2	2'-11"	4	5	6	7	8	9	10	11	12	13	14	15	16	17	18	19	20
TOP SLAB THICKNESS, t_1		8.00	8.00	8.00	7.00	7.50	7.25	7.75	8.25	8.75	9.25	9.00	9.50	10.00	10.25	10.75	11.25	11.75	12.25	12.50	13.00
SIDE WALL THICKNESS, t_2		8.00	8.00	8.00	8.00	8.00	8.00	8.00	8.00	8.00	8.00	8.00	8.00	8.00	8.25	8.50	8.75	9.00	9.25	9.25	9.50
BOTTOM SLAB THICKNESS, t_3		7.00	7.25	7.50	7.75	8.50	8.25	8.75	9.25	9.75	10.25	10.50	11.00	11.25	11.75	12.00	12.50	13.00	13.50	14.00	14.25
TRANSVERSE REINFORCEMENT																					
B BARS	BAR NO. & SPACING	9@13"	8@11"	8@11"	8@19"	8@19"	8@16"	6@9"	8@15"	8@15"	9@16"	8@15"	9@19"	8@13"	7@10"	7@10"	9@16"	9@15"	9@15"	8@11"	8@11"
	LENGTH, h	10'-3.5"	10'-3.5"	10'-3.5"	10'-3.5"	10'-3.5"	10'-3.5"	10'-3.5"	10'-3.5"	10'-3.5"	10'-3.5"	10'-3.5"	10'-3.5"	10'-3.5"	10'-3.5"	10'-4.0"	10'-4.5"	10'-5.0"	10'-5.5"	10'-5.5"	10'-6.0"
B_1 BARS	BAR NO. & SPACING	4@13"	4@11"	4@11"	6@19"	6@19"	5@16"	4@9"	5@15"	5@15"	4@16"	8@15"	6@19"	4@13"	4@10"	4@10"	5@16"	5@15"	5@15"	4@11"	4@11"
	LENGTH, h	2'-7.0"	3'-3.5"	3'-5.0"	5'-10"	5'-11.5"	5'-5.0"	5'-8.0"	5'-7.0"	5'-9.5"	4'-10.5"	5'-8.5"	5'-11.5"	5'-5.0"	5'-9.0"	5'-11.5"	5'-11.5"	5'-8.5"	5'-11.5"	5'-6.0"	5'-9.0"
C BARS	BAR NO. & SPACING	4@9"	4@9"	4@9"	4@10"	4@11"	4@10"	4@12"	4@12"	4@11"	4@11"	4@13"	4@12"	4@12"	4@12"	4@12"	4@12"	4@12"	4@12"	4@12"	4@11"
	HORIZ. LENGTH, h	4'-0"	4'-0"	4'-0"	4'-0"	4'-0"	4'-0"	4'-0"	4'-0"	4'-0"	4'-0"	4'-0"	4'-0"	4'-0"	4'-0.5"	4'-0.5"	4'-1.0"	4'-1.0"	4'-1.5"	4'-1.5"	4'-1.5"
	VERT. LENGTH, v	11'-1.0"	11'-1.0"	11'-1.0"	11'-0"	11'-0.5"	11'-0.5"	11'-1.0"	11'-1.5"	11'-2.0"	11'-2.5"	11'-2.0"	11'-2.5"	11'-3.0"	11'-3.5"	11'-4.0"	11'-4.5"	11'-5.0"	11'-5.5"	11'-5.5"	11'-6.0"
C_1 BARS	BAR NO. & SPACING	4@9"	4@9"	4@9"	5@10"	5@11"	5@10"	6@12"	6@12"	5@11"	5@11"	6@13"	6@12"	6@12"	6@12"	6@12"	6@12"	6@12"	6@12"	6@12"	5@11"
	HORIZ. LENGTH, h	1'-10.0"	1'-9.0"	1'-9.5"	1'-10.0"	1'-10.5"	1'-10.5"	1'-11.0"	1'-10.5"	1'-10.0"	1'-10.5"	1'-11.0"	1'-11.0"	1'-11.5"	1'-11.5"	2'-0.5"	2'-1.0"	2'-1.5"	2'-2.0"	2'-2.5"	2'-2.5"
	VERT. LENGTH, v	2'-1.0"	2'-1.0"	2'-3.0"	3'-1.5"	2'-8.0"	2'-6.0"	2'-10.0"	2'-7.5"	2'-5.0"	2'-5.0"	2'-9.0"	2'-7.0"	2'-6.5"	2'-7.0"	2'-6.5"	2'-5.5"	2'-6.0"	2'-6.0"	2'-6.0"	2'-6.0"
C_2 BARS	BAR NO. & SPACING	4@9"	4@9"	4@9"	4@10"	4@11"	4@10"	4@12"	4@12"	4@11"	4@11"	4@13"	4@12"	4@12"	4@12"	4@12"	4@12"	4@12"	4@12"	4@12"	4@11"
	HORIZ. LENGTH, h	4'-0"	4'-0"	4'-0"	4'-0"	4'-0"	4'-0"	4'-0"	4'-0"	4'-0"	4'-0"	4'-0"	4'-0"	4'-0"	4'-0.5"	4'-0.5"	4'-1.0"	4'-1.0"	4'-1.5"	4'-1.5"	4'-1.5"
	VERT. LENGTH, v	2'-0"	2'-0.5"	2'-0.5"	2'-1.0"	2'-1.5"	2'-1.5"	2'-2.0"	2'-2.5"	2'-3.0"	2'-3.5"	2'-3.5"	2'-4.0"	2'-4.5"	2'-5.0"	2'-5.0"	2'-5.5"	2'-6.0"	2'-6.5"	2'-7.0"	2'-7.5"
C_3 BARS	BAR NO. & SPACING	4@9"	4@9"	4@9"	5@10"	5@11"	5@10"	6@12"	6@12"	5@11"	5@11"	6@13"	6@12"	6@12"	6@12"	6@12"	6@12"	6@12"	6@12"	6@12"	5@11"
	HORIZ. LENGTH, h	1'-10.5"	1'-10.0"	1'-10.5"	1'-11.0"	1'-11.5"	1'-11.0"	2'-0.5"	2'-0"	1'-11.5"	2'-0"	2'-2.5"	2'-1.0"	2'-1.5"	2'-2.0"	2'-2.0"	2'-2.5"	2'-3.0"	2'-3.5"	2'-4.0"	2'-3.5"
	VERT. LENGTH, v	2'-0"	1'-5.5"	1'-8.0"	2'-0.5"	2'-1.0"	2'-5.0"	2'-9.5"	2'-4.5"	2'-1.5"	2'-1.5"	2'-3.0"	2'-2.5"	2'-2.5"	2'-3.0"	2'-3.0"	2'-3.5"	2'-4.0"	2'-4.5"	2'-4.5"	2'-4.5"
D BARS	BAR NO. & SPACING	4@8"	4@8"	4@8"	4@8"	4@9"	4@8"	4@9"	4@9"	4@9"	4@10"	4@10"	4@10"	4@10"	4@11"	4@11"	4@12"	4@12"	4@12"	4@13"	4@13"
	LENGTH, v	12'-0"	12'-0"	12'-0.5"	11'-11.5"	12'-1.0"	12'-0.5"	12'-1.5"	12'-2.5"	12'-3.5"	12'-4.5"	12'-4.5"	12'-5.5"	12'-6.0"	12'-7.0"	12'-8.0"	12'-9.0"	12'-10.0"	12'-10.5"	12'-11.5"	13'-0.5"
F BARS	BAR NO. & SPACING	4@8"	7@19"	7@15"	8@16"	7@13"	9@17"	7@10"	9@16"	9@15"	9@15"	9@15"	9@15"	8@11"	8@11"	9@14"	9@13"	8@10"	8@10"	8@10"	8@10"
	LENGTH, h	10'-3.5"	10'-3.5"	10'-3.5"	10'-3.5"	10'-3.5"	10'-3.5"	10'-3.5"	10'-3.5"	10'-3.5"	10'-3.5"	10'-3.5"	10'-3.5"	10'-3.5"	10'-3.5"	10'-4.0"	10'-4.5"	10'-5.0"	10'-5.5"	10'-5.5"	10'-6.0"
F_1 BARS	BAR NO. & SPACING	4@8"	6@19"	5@15"	5@16"	5@13"	5@17"	4@10"	5@16"	5@15"	5@15"	5@15"	5@15"	4@11"	4@11"	5@14"	4@13"	4@10"	4@10"	4@10"	4@10"
	LENGTH, h	7'-5.0"	6'-11.0"	6'-3.0"	5'-10.5"	6'-5.5"	5'-7.5"	5'-9.0"	5'-9.5"	5'-7.5"	5'-10.5"	5'-9.0"	6'-0"	5'-8.0"	5'-11.5"	6'-2.0"	5'-8.0"	5'-7.5"	5'-10.0"	6'-1.0"	6'-3.0"
G BARS	BAR NO. & SPACING	4@9"	4@9"	4@9"	4@10"	4@11"	4@10"	4@12"	4@12"	4@11"	4@11"	4@13"	4@12"	4@12"	4@12"	4@12"	4@12"	4@12"	4@12"	4@12"	4@11"
	LENGTH, h	4'-7.5"	4'-7.5"	4'-7.5"	4'-7.5"	4'-7.5"	4'-7.5"	4'-7.5"	4'-7.5"	4'-7.5"	4'-7.5"	4'-7.5"	4'-7.5"	4'-7.5"	4'-7.5"	4'-7.5"	4'-7.5"	4'-7.5"	4'-7.5"	4'-7.5"	4'-7.5"
H BARS	BAR NO. & SPACING	4@9"	4@9"	4@9"	4@10"	4@11"	4@10"	4@12	4@12	4@11"	4@11"	4@13"	4@12"	4@12	4@12	4@12"	4@12"	4@12"	4@12"	4@12"	4@11"
	LENGTH, h	4'-7.5"	4'-7.5"	4-7.5"	4'-7.5"	4'-7.5"	4'-7.5"	4'-7.5"	4'-7.5"	4'-7.5"	4'-7.5"	4'-7.5"	4'-7.5"	4'-7.5"	4'-7.5"	4'-7.5"	4'-7.5"	4'-7.5"	4'-7.5"	4'-7.5"	4'-7.5"
LONGITUDINAL REINFORCEMENT																					
NO. 4 LONG. BARS	NUMBER IN TOP SLAB	25	24	24	16	16	16	16	16	16	16	16	16	16	16	16	16	16	16	16	16
	NUMBER IN BOTTOM SLAB	16	16	16	16	16	16	16	16	16	16	16	16	16	16	16	16	16	16	16	16
	NUMBER IN WALLS	28	28	28	28	28	28	28	28	28	28	28	28	28	28	28	28	28	28	28	28
	TOTAL NUMBER	69	68	68	60	60	60	60	60	60	60	60	60	60	60	60	60	60	60	60	60
CONCRETE: CU. YDS. PER LIN. FT.		1.05	1.06	1.07	1.04	1.09	1.07	1.10	1.13	1.17	1.20	1.20	1.23	1.26	1.30	1.34	1.40	1.45	1.50	1.53	1.57
STEEL: LBS. PER LIN. FT.		181.0	180.0	183.0	175.3	167.1	180.5	180.2	180.1	177.9	178.0	176.4	181.5	184.2	184.5	186.3	186.4	191.0	192.3	193.0	190.0

HYDRAULIC PROPERTIES (BOX)

n = .013

Area = 100.3 sq. ft.

$$K = Q/S^{\frac{1}{2}} = \frac{1.486}{n} AR^{\frac{2}{3}} = 21,303$$

DRAWN BY	REVISIONS		
E.E.N	MARK	DATE	DESCRIPTION
CHECKED BY G.S.			
DESIGNED BY V.C.M.			
SUBMITTED BY C.W.H.			

SUPERSEDES DWG NO 2-D236.12 DATED APR '57

LOS ANGELES COUNTY
FLOOD CONTROL DISTRICT

DESIGN TABLE
FOR
R. C. BOX CONDUITS

RECOMMENDED BY — DIVISION ENGINEER DESIGN
APPROVAL RECOMMENDED BY — ASS'T CHIEF DEPUTY ENGINEER
APPROVED BY — CHIEF ENGINEER 1/5/70

SCALE	DATE	DWG. NO. 2-D236.12
NONE	1-1-'71	SHEET 12 OF 14

BOX SIZE: W = 9'-7", H = 11'-6" DIAMETER OF HYDRAULICALLY EQUIVALENT PIPE = 138"

		DEPTH OF COVER IN FEET																			
		1	2	2'-11"	4	5	6	7	8	9	10	11	12	13	14	15	16	17	18	19	20
TOP SLAB THICKNESS, t_1		8.25	8.25	8.25	7.25	7.75	7.50	8.00	8.50	9.00	9.50	9.25	9.75	10.50	10.75	11.25	11.75	12.25	12.75	13.00	13.50
SIDE WALL THICKNESS, t_2		8.00	8.00	8.00	8.00	8.00	8.00	8.00	8.00	8.00	8.00	8.00	8.25	8.50	8.50	8.75	9.00	9.25	9.50	9.75	9.75
BOTTOM SLAB THICKNESS, t_3		7.25	7.50	7.75	8.00	8.75	8.50	9.00	9.50	10.25	10.75	10.75	11.25	11.50	12.00	12.50	13.00	13.50	14.00	14.50	15.00
TRANSVERSE REINFORCEMENT																					
B BARS	BAR NO. & SPACING	8 @ 11"	8 @ 11"	9 @ 14"	8 @ 18"	8 @ 18"	8 @ 15"	9 @ 19"	9 @ 17"	8 @ 14"	7 @ 10"	8 @ 13"	8 @ 14"	7 @ 10"	8 @ 12"	9 @ 15"	9 @ 15"	7 @ 9"	8 @ 11"	8 @ 11"	9 @ 13"
	LENGTH, h	10'-8"	10'-8"	10'-8"	10'-8"	10'-8"	10'-8"	10'-8"	10'-8"	10'-8"	10'-8"	10'-8"	10'-8.5"	10'-9"	10'-9"	10'-9.5"	10'-10"	10'-10.5"	10'-11"	10'-11"	10'-11.5"
B_1 BARS	BAR NO. & SPACING	4 @ 11"	4 @ 11"	5 @ 14"	6 @ 18"	6 @ 18"	5 @ 15"	6 @ 19"	5 @ 17"	5 @ 14"	4 @ 10"	4 @ 13"	5 @ 14"	4 @ 10"	4 @ 12"	5 @ 15"	5 @ 15"	4 @ 9"	4 @ 11"	4 @ 11"	4 @ 13"
	LENGTH, h	3'-6"	3'-8"	3'-10.5"	6'-1.5"	6'-3"	5'-8"	5'-11"	5'-6.5"	6'-0"	5'-10.5"	5'-4.5"	6'-1.5"	6'-0.5"	5'-8"	5'-10"	6'-1.5"	6'-3.5"	5'-11.5"	6'-2"	5'-9"
C BARS	BAR NO. & SPACING	4 @ 9"	4 @ 9"	4 @ 9"	4 @ 10"	4 @ 10"	4 @ 11"	4 @ 11"	4 @ 10"	4 @ 12"	4 @ 10"	4 @ 12"	4 @ 10"	4 @ 10"	4 @ 11"	4 @ 10"	4 @ 10"	4 @ 10"	4 @ 10"	4 @ 12"	4 @ 12"
	HORIZ. LENGTH, h	4'-1.5"	4'-1.5"	4'-1.5"	4'-1.5"	4'-1.5"	4'-1.5"	4'-1.5"	4'-1.5"	4'-1.5"	4'-1.5"	4'-1.5"	4'-1.5"	4'-2"	4'-2"	4'-2"	4'-2.5"	4'-2.5"	4'-3"	4'-3"	4'-3"
	VERT. LENGTH, v	11'-7.5"	11'-7.5"	11'-7.5"	11'-6.5"	11'-7"	11'-6.5"	11'-7"	11'-7.5"	11'-8"	11'-8.5"	11'-8.5"	11'-9"	11'-9.5"	11'-10"	11'-10.5"	11'-11"	11'-11.5"	12'-0"	12'-0"	12'-0.5"
C_1 BARS	BAR NO. & SPACING	4 @ 9"	4 @ 9"	4 @ 9"	5 @ 10"	5 @ 10"	6 @ 11"	6 @ 11"	5 @ 10"	6 @ 12"	5 @ 10"	6 @ 12"	5 @ 10"	5 @ 10"	6 @ 11"	5 @ 10"	5 @ 10"	5 @ 10"	5 @ 10"	6 @ 12"	6 @ 12"
	HORIZ. LENGTH, h	1'-11.5"	1'-10.5"	1'-10.5"	1'-11.5"	1'-11"	2'-0"	1'-11.5"	1'-11"	1'-11.5"	1'-11"	1'-11.5"	1'-11"	2'-0"	2'-1"	2'-1"	2'-1.5"	2'-2"	2'-2.5"	2'-4"	2'-4.5"
	VERT. LENGTH, v	2'-1.5"	2'-2"	2'-4"	3'-7"	2'-4"	3'-1.5"	2'-9.5"	2'-5"	2'-9.5"	2'-5.5"	2'-9.5"	2'-5"	2'-5"	2'-7.5"	2'-5.5"	2'-6"	2'-6"	2'-6.5"	2'-8"	2'-8"
C_2 BARS	BAR NO. & SPACING	4 @ 9"	5 @ 9"	4 @ 9"	4 @ 10"	4 @ 10"	5 @ 11"	4 @ 11"	4 @ 10"	4 @ 12"	4 @ 10"	4 @ 12"	4 @ 10"	4 @ 10"	4 @ 11"	4 @ 10"	4 @ 10"	4 @ 10"	4 @ 10"	4 @ 12"	4 @ 12"
	HORIZ. LENGTH, h	4'-1.5"	4'-5"	4'-1.5"	4'-1.5"	4'-1.5"	4'-5"	4'-1.5"	4'-1.5"	4'-1.5"	4'-1.5"	4'-1.5"	4'-1.5"	4'-2"	4'-2"	4'-2"	4'-2.5"	4'-2.5"	4'-3"	4'-3"	4'-3"
	VERT. LENGTH, v	2'-0.5"	2'-0.5"	2'-1"	2'-1"	2'-2"	2'-1.5"	2'-2"	2'-2.5"	2'-3.5"	2'-4"	2'-4"	2'-4.5"	2'-4.5"	2'-5"	2'-5.5"	2'-6"	2'-6.5"	2'-7"	2'-7.5"	2'-8"
C_3 BARS	BAR NO. & SPACING	4 @ 9"	4 @ 9"	5 @ 9"	5 @ 10"	5 @ 10"	5 @ 11"	6 @ 11"	5 @ 10"	6 @ 12"	5 @ 10"	6 @ 12"	5 @ 10"	5 @ 10"	6 @ 11"	5 @ 10"	5 @ 10"	5 @ 10"	5 @ 10"	6 @ 12"	6 @ 12"
	HORIZ. LENGTH, h	2'-0.5"	1'-5.5"	2'-0"	2'-1"	2'-0.5"	1'-9.5"	2'-3"	2'-0.5"	2'-5.5"	2'-1"	2'-5.5"	2'-1.5	2'-1.5"	2'-3"	2'-2.5"	2'-3"	2'-3.5"	2'-4"	2'-6"	2'-6.5"
	VERT. LENGTH, v	2'-0.5"	2'-0.5"	1'-10"	2'-1.5"	2'-1"	1'-11"	2'-8"	2'-2"	2'-3.5"	2'-2"	2'-3.5"	2'-2.5"	2'-3"	2'-4"	2'-3.5"	2'-4"	2'-4.5"	2'-5"	2'-6.5"	2'-6.5"
D BARS	BAR NO. & SPACING	5 @ 11"	5 @ 12"	5 @ 12"	5 @ 11"	4 @ 8"	5 @ 12"	4 @ 8"	4 @ 8"	4 @ 8"	4 @ 9"	4 @ 8"	4 @ 9"	4 @ 9"	4 @ 10"	4 @ 10"	4 @ 11"	4 @ 11"	4 @ 11"	4 @ 12"	4 @ 12"
	LENGTH, v	12'-6.5"	12'-6.5"	12'-7"	12'-6.5"	12'-7.5"	12'-7"	12'-8"	12'-9"	12'-10"	12'-11"	12'-11"	13'-0"	13'-0"	13'-2"	13'-3"	13'-4"	13'-4.5"	13'-5.5"	13'-6.5"	13'-7.5"
F BARS	BAR NO. & SPACING	6 @ 17"	7 @ 18"	6 @ 10"	9 @ 20"	7 @ 12"	9 @ 16"	9 @ 15"	9 @ 15"	7 @ 9"	8 @ 11"	7 @ 9"	8 @ 11"	9 @ 14"	8 @ 10"	8 @ 10"	8 @ 10"	8 @ 10"	9 @ 12"	9 @ 12"	9 @ 12"
	LENGTH, h	10'-8"	10'-8"	10'-8"	10'-8"	10'-8"	10'-8"	10'-8"	10'-8"	10'-8"	10'-8"	10'-8"	10'-8.5"	10'-9"	10'-9"	10'-9.5"	10'-10"	10'-10.5"	10'-11"	10'-11"	10'-11.5"
F_1 BARS	BAR NO. & SPACING	6 @ 17"	6 @ 18"	4 @ 10"	6 @ 20"	5 @ 12"	5 @ 16"	5 @ 15"	5 @ 15"	4 @ 9"	4 @ 11"	4 @ 9"	4 @ 11"	5 @ 14"	4 @ 10"	4 @ 10"	4 @ 10"	4 @ 10"	4 @ 12"	4 @ 12"	5 @ 12"
	LENGTH, h	7'-9.5"	7'-3"	6'-4"	6'-4.5"	6'-8"	5'-10.5"	5'-9.5"	6'-0"	6'-2.5"	6'-0"	6'-4"	6'-1"	6'-4"	5'-8"	5'-10.5"	6'-1.5"	6'-4"	6'-0"	6'-3"	6'-6"
G BARS	BAR NO. & SPACING	4 @ 9"	4 @ 9"	4 @ 9"	4 @ 10"	4 @ 10"	4 @ 11"	4 @ 11"	4 @ 10"	4 @ 12"	4 @ 10"	4 @ 12"	4 @ 10"	4 @ 10"	4 @ 11"	4 @ 10"	4 @ 10"	4 @ 10"	4 @ 10"	4 @ 12"	4 @ 12"
	LENGTH, h	4'-9.5"	4'-9.5"	4'-9.5"	4'-9.5"	4'-9.5"	4'-9.5"	4'-9.5"	4'-9.5"	4'-9.5"	4'-9.5"	4'-9.5"	4'-9.5"	4'-9.5"	4'-9.5"	4'-9.5"	4'-9.5	4'-9.5"	4'-9.5"	4'-9.5"	4'-9.5"
H BARS	BAR NO. & SPACING	4 @ 9"	5 @ 9"	4 @ 9"	4 @ 10"	4 @ 10"	5 @ 11"	4 @ 11"	4 @ 10"	4 @ 12"	4 @ 10"	4 @ 12"	4 @ 10"	4 @ 10"	4 @ 11"	4 @ 10"	4 @ 10"	4 @ 10"	4 @ 10"	4 @ 12"	4 @ 12"
	LENGTH, h	4'-9.5"	4'-9.5"	4'-9.5"	4'-9.5"	4'-9.5"	4'-9.5"	4'-9.5"	4'-9.5"	4'-9.5"	4'-9.5"	4'-9.5"	4'-9.5"	4'-9.5"	4'-9.5"	4'-9.5"	4'-9.5"	4'-9.5"	4'-9.5"	4'-9.5"	4'-9.5"
LONGITUDINAL REINFORCEMENT																					
NO. 4 LONG. BARS	NUMBER IN TOP SLAB	25	25	25	16	16	16	16	16	16	16	16	17	17	17	17	17	17	17	17	17
	NUMBER IN BOTTOM SLAB	16	16	16	16	16	16	16	16	16	16	16	17	17	17	17	17	17	17	17	17
	NUMBER IN WALLS	32	32	32	32	32	32	32	32	32	32	32	32	32	32	32	32	32	32	32	32
	TOTAL NUMBER	73	73	73	64	64	64	64	64	64	64	64	66	66	66	66	66	66	66	66	66
CONCRETE: CU. YDS. PER LIN. FT.		1.11	1.12	1.13	1.11	1.15	1.13	1.16	1.20	1.24	1.27	1.27	1.32	1.37	1.40	1.45	1.51	1.56	1.62	1.67	1.70
STEEL: LBS. PER LIN. FT.		192.3	200.7	199.1	190.6	185.6	199.9	200.6	195.9	197.3	196.9	197.4	197.1	200.1	205.9	204.4	203.8	205.6	208.1	206.2	210.8

HYDRAULIC PROPERTIES (BOX)

n = .013

Area = 109.5 sq. ft.

$K = Q/S^{\frac{1}{2}} = \frac{1.486}{n} AR^{\frac{2}{3}} = 23{,}954$

DRAWN BY	REVISIONS		
J.C.H	MARK	DATE	DESCRIPTION
CHECKED BY R.J.S.			
DESIGNED BY V.C.M			
SUBMITTED BY C.W.H			

LOS ANGELES COUNTY
FLOOD CONTROL DISTRICT

DESIGN TABLE
FOR
R. C. BOX CONDUITS

RECOMMENDED BY: D. J. Milne, DIVISION ENGINEER (DESIGN)

APPROVAL RECOMMENDED BY: C. Tingman, ASS'T CHIEF DEPUTY ENGINEER

APPROVED BY: R. E. Bumgardner 1/5/70, CHIEF ENGINEER

SCALE	DATE	DWG. NO. 2-D236.13
NONE	1-1-71	SHEET 13 OF 14

BOX SIZE: W = 10'-0", H = 12'-0" DIAMETER OF HYDRAULICALLY EQUIVALENT PIPE = 144"

		DEPTH OF COVER IN FEET																			
		1	2	2'-11"	4	5	6	7	8	9	10	11	12	13	14	15	16	17	18	19	20
TOP SLAB THICKNESS, t_1		8.50	8.50	8.50	7.50	7.50	7.75	8.25	8.75	9.25	9.75	9.50	10.25	10.75	11.25	11.75	12.25	12.75	3.25	13.50	14.00
SIDE WALL THICKNESS, t_2		8.00	8.00	8.00	8.00	8.00	8.00	8.00	8.00	8.00	8.25	8.25	8.50	8.75	9.00	9.00	9.25	9.50	9.75	10.00	10.25
BOTTOM SLAB THICKNESS, t_3		7.50	7.75	8.00	8.50	8.50	8.75	9.25	9.75	10.50	11.00	11.00	11.75	12.00	12.50	13.00	13.50	14.00	14.50	15.00	15.50
TRANSVERSE REINFORCEMENT																					
B BARS	BAR NO. & SPACING	9 @ 14"	9 @ 14"	9 @ 14"	8 @ 17"	7 @ 12"	9 @ 17"	7 @ 10"	7 @ 10"	8 @ 13"	8 @ 13"	7 @ 10"	9 @ 16"	8 @ 13"	9 @ 15"	7 @ 9"	8 @ 11"	9 @ 14"	8 @ 11"	8 @ 10"	8 @ 10"
	LENGTH, h	11'-1"	11'-1"	11'-1"	11'-1"	11'-1"	11'-1"	11'-1"	11'-1"	11'-1"	11'-1.5"	11'-1.5"	11'-2"	11'-2.5"	11'-3"	11'-3"	11'-3.5"	11'-4"	11'-4.5"	11'-5"	11'-5.5"
B_1 BARS	BAR NO. & SPACING	5 @ 14"	5 @ 14"	5 @ 14"	6 @ 17"	5 @ 12"	5 @ 17"	4 @ 10"	4 @ 10"	5 @ 13"	5 @ 13"	4 @ 10"	5 @ 16"	5 @ 13"	5 @ 15"	4 @ 9"	4 @ 11"	5 @ 14"	5 @ 11"	4 @ 10"	4 @ 10"
	LENGTH, h	3'-11"	4'-1.5"	4'-3.5"	6'-5.5"	6'-2.5"	5'-8"	5'-9.5"	5'-11.5"	6'-2"	6'-4.5"	6'-0.5"	6'-1.5"	6'-6"	6'-2"	6'-4.5"	6'-1"	6'-5"	6'-7"	5'-11"	6'-2"
C BARS	BAR NO. & SPACING	4 @ 9"	4 @ 9"	4 @ 9"	5 @ 14"	5 @ 14"	4 @ 9"	4 @ 9"	4 @ 11"	4 @ 11"	4 @ 9"	4 @ 11"	4 @ 11"	4 @ 11"	4 @ 11"	4 @ 11"	4 @ 11"	4 @ 11"	4 @ 11"	4 @ 11"	4 @ 11"
	HORIZ. LENGTH, h	4'-2.5"	4'-2.5"	4'-2.5"	4'-6"	4'-6"	4'-2.5"	4'-2.5"	4'-2.5"	4'-2.5"	4'-3"	4'-3"	4'-3"	4'-3.5"	4'-3.5"	4'-3.5"	4'-4"	4'-4"	4'-4.5"	4'-4.5"	4'-5"
	VERT. LENGTH, v	12'-1.5"	12'-1.5"	12'-1.5"	12'-0.5"	12'-0.5"	12'-1"	12'-1.5"	12'-2"	12'-2.5"	12'-3"	12'-2.5"	12'-3.5"	12'-4"	12'-4.5"	12'-5"	12'-5.5"	12'-6"	12'-6.5"	12'-6.5"	12'-7"
C_1 BARS	BAR NO. & SPACING	4 @ 9"	4 @ 9"	4 @ 9"	6 @ 14"	6 @ 14"	5 @ 9"	5 @ 9"	6 @ 11"	6 @ 11"	5 @ 9"	6 @ 11"	6 @ 11"	6 @ 11"	6 @ 11"	6 @ 11"	6 @ 11"	6 @ 11"	6 @ 11"	6 @ 11"	6 @ 11"
	HORIZ. LENGTH, h	2'-1"	1'-11.5"	1'-11.5"	1'-11.5"	2'-0"	2'-0"	2'-0"	2'-0.5"	2'-0.5"	1'-11.5"	2'-0.5"	2'-1.5"	2'-2"	2'-2.5"	2'-3"	2'-3.5"	2'-4"	2'-5"	2'-5"	2'-5.5"
	VERT. LENGTH, v	2'-2.5"	2'-11.5"	2'-9.5"	2'-11"	2'-9.5"	2'-6.5"	2'-6.5"	2'-10"	2'-10"	2'-5.5"	2'-10"	2'-10"	2'-10"	2'-9.5"	2'-10"	2'-9.5"	2'-8.5"	2'-9"	2'-9"	2'-9.5"
C_2 BARS	BAR NO. & SPACING	4 @ 9"	5 @ 9"	4 @ 9"	5 @ 14"	5 @ 14"	4 @ 9"	4 @ 9"	4 @ 11"	4 @ 11"	4 @ 9"	4 @ 11"	4 @ 11"	4 @ 11"	4 @ 11"	4 @ 11"	4 @ 11"	4 @ 11"	4 @ 11"	4 @ 11"	4 @ 11"
	HORIZ. LENGTH, h	4'-2.5"	4'-6"	4'-2.5"	4'-6"	4'-6"	4'-2.5"	4'-2.5"	4'-2.5"	4'-2.5"	4'-3"	4'-3"	4'-3"	4'-3.5"	4'-3.5"	4'-3.5"	4'-4"	4'-4"	4'-4.5"	4'-4.5"	4'-5"
	VERT. LENGTH, v	2'-0.5"	2'-1"	2'-1"	2'-5.5"	2'-5.5"	2'-2"	2'-2.5"	2'-3"	2'-3.5"	2'-4"	2'-4"	2'-5"	2'-5"	2'-5.5"	2'-6"	2'-6.5"	2'-7"	2'-7.5"	2'-8"	2'-8.5"
C_3 BARS	BAR NO. & SPACING	4 @ 9"	4 @ 9"	5 @ 9"	6 @ 14"	6 @ 14"	5 @ 9"	5 @ 9"	6 @ 11"	6 @ 11"	5 @ 9"	6 @ 11"	6 @ 11"	6 @ 11"	6 @ 11"	6 @ 11"	6 @ 11"	6 @ 11"	6 @ 11"	6 @ 11"	6 @ 11"
	HORIZ. LENGTH, h	2'-3.5"	1'-7"	2'-1.5"	2'-1.5"	2'-1.5"	2'-1.5"	2'-1.5"	2'-8.5"	2'-8"	2'-2"	2'-7.5"	2'-5.5"	2'-4.5"	2'-4.5"	2'-5"	2'-5.5"	2'-6"	2'-6.5"	2'-7"	2'-7.5"
	VERT. LENGTH, v	2'-0.5"	2'-1"	1'-11.5"	2'-2.5"	2'-3"	2'-2.5"	2'-3"	2'-5"	2'-4"	2'-3"	2'-4.5"	2'-5"	2'-5.5"	2'-6"	2'-6"	2'-6.5	2'-7"	2'-7.5"	2'-7.5'	2'-8"
D BARS	BAR NO. & SPACING	5 @ 10"	5 @ 10"	5 @ 10"	5 @ 10"	5 @ 10"	5 @ 11"	5 @ 11"	5 @ 11"	5 @ 12"	4 @ 8"	4 @ 8"	4 @ 8"	4 @ 8"	4 @ 9"	4 @ 9"	4 @ 10"	4 @ 10"	4 @ 10"	4 @ 11"	4 @ 11"
	LENGTH, v	13'-1"	13'-1"	13'-1.5"	13'-1"	13'-1"	13'-1.5"	13'-2"	13'-3.5"	13'-5"	13'-6"	13'-5.5"	13'-7"	13'-8"	13'-9'	13'-9.5"	13'-10.5"	13'-11.5"	14'-0.5"	14'-1.5"	14'-2.5"
F BARS	BAR NO. & SPACING	7 @ 19"	5 @ 10"	6 @ 11"	9 @ 17"	9 @ 16"	9 @ 15"	9 @ 14"	9 @ 14"	9 @ 14"	8 @ 11"	9 @ 14"	8 @ 11"	8 @ 10"	8 @ 10"	9 @ 12"	9 @ 12"	9 @ 12"	9 @ 12"	8 @ 9"	8 @ 9"
	LENGTH, h	11'-1"	11'-1"	11'-1"	11'-1"	11'-1"	11'-1"	11'-1"	11'-1"	11'-1"	11'-1.5"	11'-1.5"	11'-2"	11'-2.5"	11'-3"	11'-3"	11'-3.5"	11'-4"	11'-4.5"	11'-5"	11'-5.5"
F_1 BARS	BAR NO. & SPACING	6 @ 19"	5 @ 10"	5 @ 11"	5 @ 17"	5 @ 16"	5 @ 15"	5 @ 14"	5 @ 14"	5 @ 14"	5 @ 11"	5 @ 14"	5 @ 11"	4 @ 10"	4 @ 10"	4 @ 12"	5 @ 12"	5 @ 12"	5 @ 12"	4 @ 9"	4 @ 9"
	LENGTH, h	7'-8.5"	8'-1.5"	7'-5"	6'-1.5"	6'-1"	6'-1"	6'-0"	6'-2.5"	6'-5.5"	6'-7"	6'-6"	6'-8"	6'-1.5"	6'-4.5"	6'-1"	6'-3.5"	6'-6.5"	6'-9.5"	6'-5"	6'-8"
G BARS	BAR NO. & SPACING	4 @ 9"	4 @ 9"	4 @ 9"	5 @ 14"	5 @ 14"	4 @ 9"	4 @ 9"	4 @ 11"	4 @ 11"	4 @ 9"	4 @ 11"	4 @ 11"	4 @ 11"	4 @ 11"	4 @ 11"	4 @ 11"	4 @ 11"	4 @ 11"	4 @ 11"	4 @ 11"
	LENGTH, h	5'-0"	5'-0"	5'-0"	5'-0"	5'-0"	5'-0"	5'-0"	5'-0"	5'-0"	5'-0"	5'-0"	5'-0"	5'-0"	5'-0"	5'-0"	5'-0"	5'-0"	5'-0"	5'-0"	5'-0"
H BARS	BAR NO. & SPACING	4 @ 9"	5 @ 9"	4 @ 9"	5 @ 14"	5 @ 14"	4 @ 9"	4 @ 9"	4 @ 11"	4 @ 11"	4 @ 9"	4 @ 11"	4 @ 11"	4 @ 11"	4 @ 11"	4 @ 11"	4 @ 11"	4 @ 11"	4 @ 11"	4 @ 11"	4 @ 11"
	LENGTH, h	5'-0"	5'-0"	5'-0"	5'-0"	5'-0"	5'-0"	5'-0"	5'-0"	5'-0"	5'-0"	5'-0"	5'-0"	5'-0"	5'-0"	5'-0"	5'-0"	5'-0"	5'-0"	5'-0"	5'-0"
LONGITUDINAL REINFORCEMENT																					
NO. 4 LONG. BARS	NUMBER IN TOP SLAB	27	27	27	17	17	17	17	17	17	17	17	17	17	17	17	17	17	17	17	17
	NUMBER IN BOTTOM SLAB	17	17	17	17	17	17	17	17	17	17	17	17	17	17	17	17	17	17	17	17
	NUMBER IN WALLS	32	32	32	32	32	32	32	32	32	32	32	32	32	32	32	32	32	32	32	32
	TOTAL NUMBER	76	76	76	66	66	66	66	66	66	66	66	66	66	66	66	66	66	66	66	66
CONCRETE: CU. YDS. PER LIN. FT.		1.18	1.19	1.19	1.18	1.18	1.19	1.23	1.26	1.31	1.36	1.36	1.43	1.48	1.53	1.57	1.63	1.68	1.74	1.79	1.85
STEEL: LBS. PER LIN. FT.		205.1	217.4	215.1	210.1	213.3	213.4	217.4	217.2	216.1	218.7	214.0	217.5	219.2	218.6	221.3	222.9	225.0	228.3	228.4	229.8

HYDRAULIC PROPERTIES (BOX)

n = .013

Area = 119.4 sq. ft.

$K = Q/S^{\frac{1}{2}} = \frac{1.486}{n} AR^{\frac{2}{3}} = 26{,}849$

DRAWN BY	REVISIONS		
J.C.H.	MARK	DATE	DESCRIPTION
CHECKED BY R.J.S.			
DESIGNED BY V.C.M.			
SUBMITTED BY C.W.H.			

LOS ANGELES COUNTY
FLOOD CONTROL DISTRICT

DESIGN TABLE
FOR
R. C. BOX CONDUITS

RECOMMENDED BY: DIVISION ENGINEER (DESIGN)
APPROVAL RECOMMENDED BY: ASS'T CHIF DEPUTY ENGINEER
APPROVED BY: A. E. Bennington 11/5/70 CHIEF ENGINEER

SCALE	DATE	DWG. NO. 2-D236.14
NONE	1-1-71	SHEET 14 OF 14

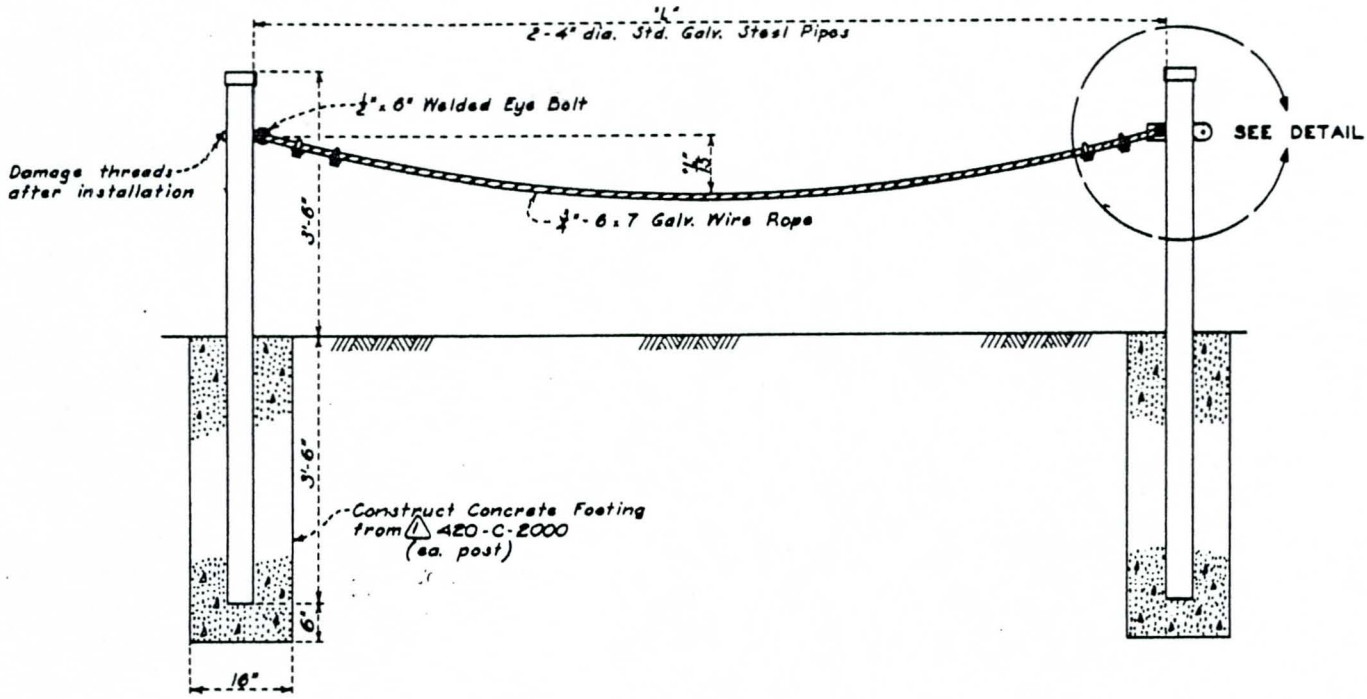

ELEVATION

Notes:
1. Value of "L" is shown on Plans.
2. Lock bar, thimbles, and clips to be galvanized (ASTM Designation: A123).

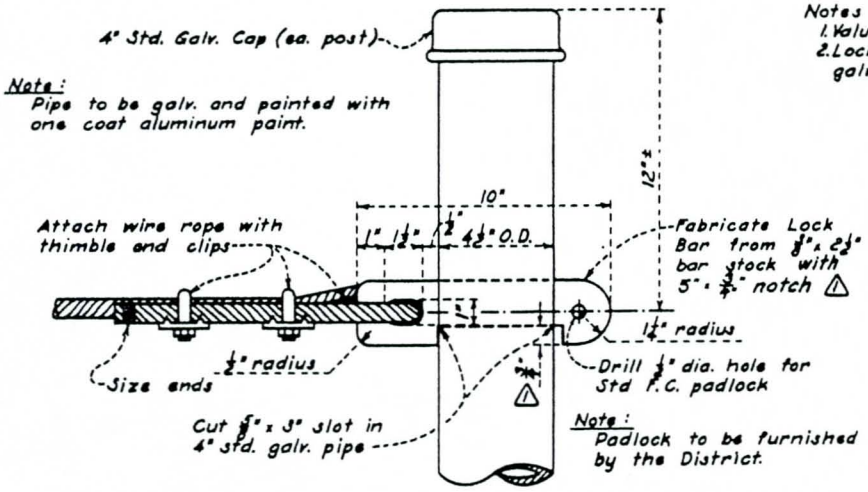

DETAIL
LATCHING ASSEMBLY

REVISIONS		
MARK	DATE	DESCRIPTION
△1	3-24-72	Revise concrete designation and change in latching bar design

LOS ANGELES COUNTY FLOOD CONTROL DISTRICT

STANDARD
WIRE ROPE BARRICADE
FOR ACCESS ROADS

DRAWN BY F.O.W.
TRACED BY F.O.W.
CHECKED BY C.F.E. H.S.M.
RECOMMENDED BY W. B. Pearce DIVISION ENGINEER (DESIGN)
DESIGNED BY
SUBMITTED BY W.N.M.
APPROVED BY H. E. Nelson 6/19/57 CHIEF ENGINEER

SCALE	DATE	NO. 2-D238
NONE	MAY 1957	SHEET 1 OF 1

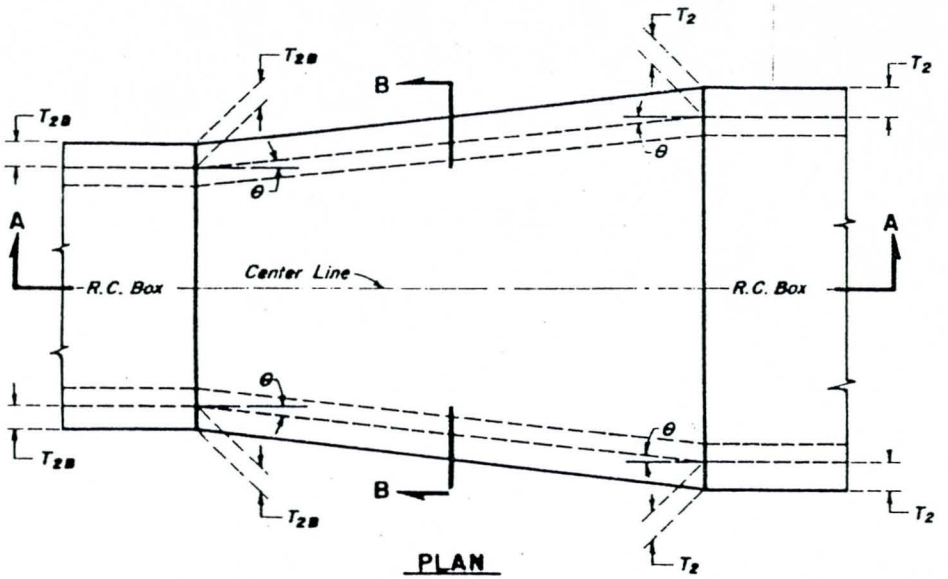

PLAN

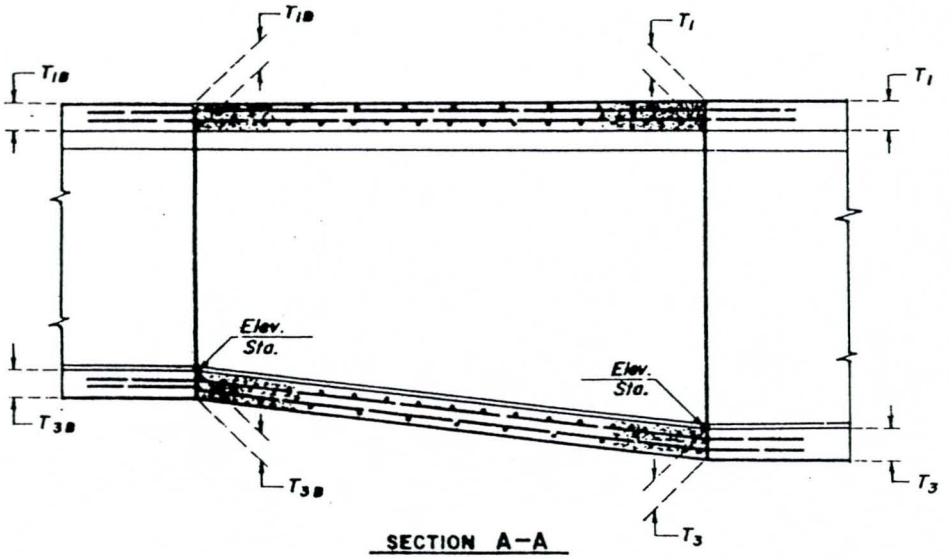

SECTION A–A

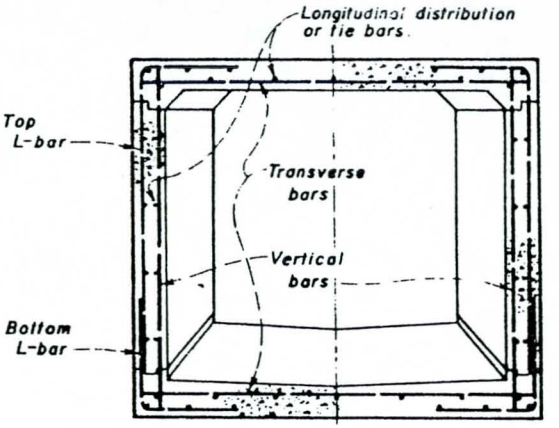

SECTION B–B

NOTES

1. The horizontal angle of divergence or convergence, θ, shall not exceed 5° 45'.
2. The reinforcing steel bar size, spacing, and cover over the steel of straight transverse bars in top or bottom slabs, of L-bars in top or bottom corners, of straight vertical bars in side walls and of longitudinal distribution and tie bars in top or bottom slabs or side walls shall be those of whichever adjoining box section provides the greater steel area for each type of bar. The bar lengths shall vary uniformly throughout the transition.
3. The thickness of the walls and slabs shall be those of the adjoining box section at each end of the transition and shall vary uniformly between the two ends.
4. f'_c = 3000 p.s.i. at 28 days.
5. The transition structure shall be constructed in accordance with the general structural notes applying to box structures, shown on the project drawings.
6. Details of construction joints and keyways shall be as shown on the project drawings for single barrel box structures.

SUPERSEDES STD. DWG. NO. 2-D186

REVISIONS		
MARK	DATE	DESCRIPTION

LOS ANGELES COUNTY FLOOD CONTROL DISTRICT

TRANSITION STRUCTURE NO. 2

PLAN & SECTIONS

DRAWN BY J. W. H. | DESIGNED BY C. W. H.
TRACED BY J. W. H. | SUBMITTED BY W. H. E. D.
CHECKED BY C. W. H.
RECOMMENDED BY G. W. Cutland DIVISION ENGINEER (DESIGN)

APPROVED BY W. E. Hedger 1/3/58 CHIEF ENGINEER

SCALE	DATE	NO. 2-D239
NONE	JAN. '58	SHEET 1 OF 1

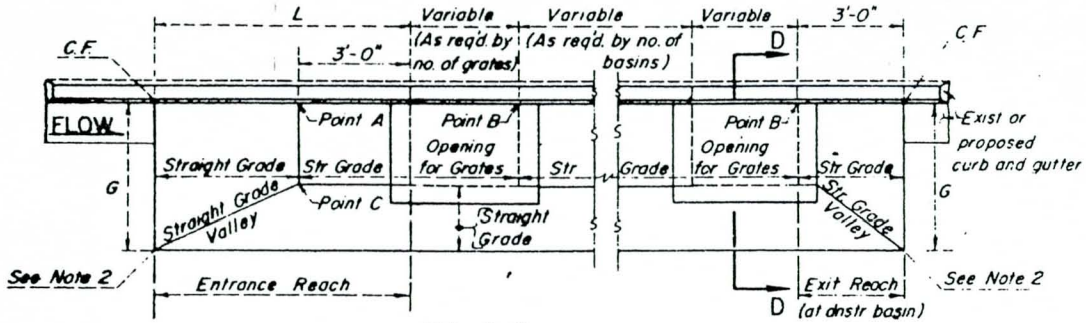

PLAN
CASE "A"

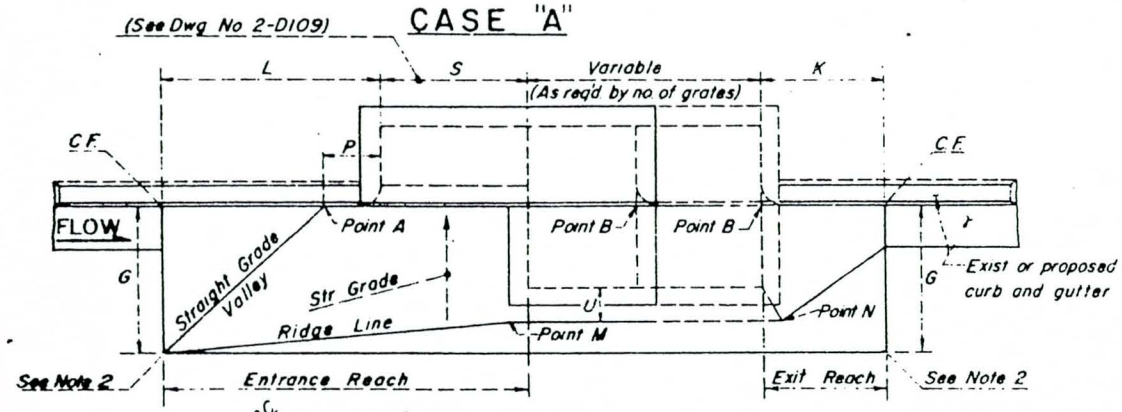

PLAN
CASE "B"

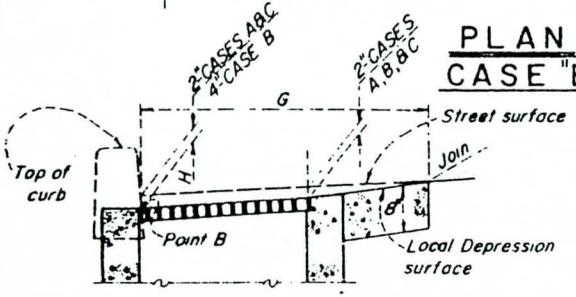

SECTION D-D

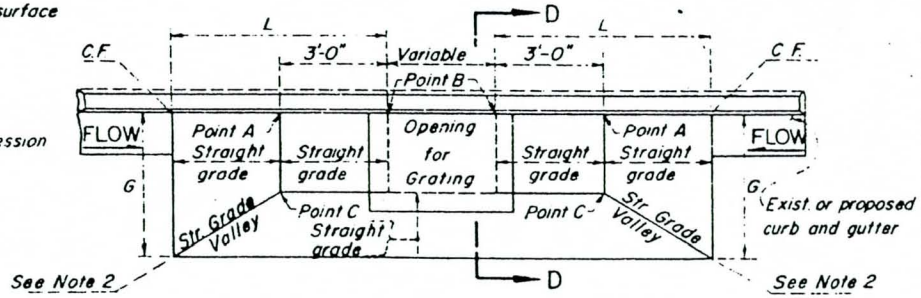

PLAN
CASE "C"

NOTES

1 DESIGNATION

Local depression for Catch Basin No 4 and No 7 shall be CASE A unless otherwise shown on the general plan

Local depression for Catch Basin No 6 shall be CASE B unless otherwise shown on the general plan

2 CONCRETE Design, f'_c=3,000 psi compressive strength at 28 days with a minimum required thickness of 8 inches

The street-side edges of the local depression shall conform to the existing street surface or to elevations shown on the general plan

3 DIMENSIONS CASES A & C (unless otherwise shown)

Points A and B shall be set at 2 inches below the existing gutter grade

Point C shall be set with the same rise as the grating See Section D-D

Dimension, L, is related to the number of grates

No. of grates	L (ft)	No of grates	L (ft)
1	7	3	10
2	9	4	11

G = 4'-0" and K = 3'-0"

CASE B (unless otherwise shown)

Points A and B shall be set at 4 inches below the existing gutter grade

K = 3'-0"; L = 6'-0"; U = 12 inches; P = 12 inches (S = 4'-0"); P = 18 inches (S = 11'-0")

G = 4'-0" (for dimension S, see Standard Drawing No 2-D109)

Points M and N shall be on a straight grade, and on the street cross-slope

4 GENERAL:

For special details governing the construction of the local depression on a vertical curve, see the general plan.

Where no curb exists, the curb face (C F) shall be 8 inches unless otherwise shown on the general plan. Such curbs shall be constructed to the ends of the local depression, and the curb section shall conform to that of the controlling agency.

Supersedes drawing of the same number dated Sept. 1958

DRAWN BY	REVISIONS		
D.W.H.	MARK	DATE	DESCRIPTION
CHECKED BY D.W.H.			
DESIGNED BY G.J.P.			
SUBMITTED BY C.W.H.			

LOS ANGELES COUNTY
FLOOD CONTROL DISTRICT

LOCAL DEPRESSION NO. 3

FOR GRATING CATCH BASINS

RECOMMENDED BY C. F. Cahelly DIVISION ENGINEER

APPROVAL RECOMMENDED BY Vincent Dawson SR. CHIEF DEPUTY ENGINEER

APPROVED BY Walter J. Dixon CHIEF ENGINEER

SCALE	DATE	DWG. NO. 2-D248
NONE	5-15-'68	SHEET 1 OF 1

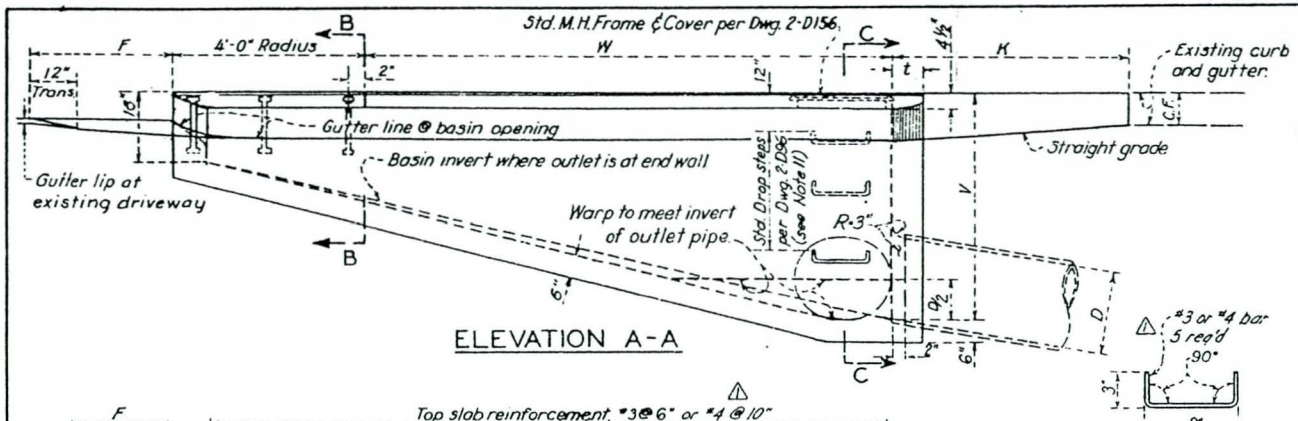

ELEVATION A-A

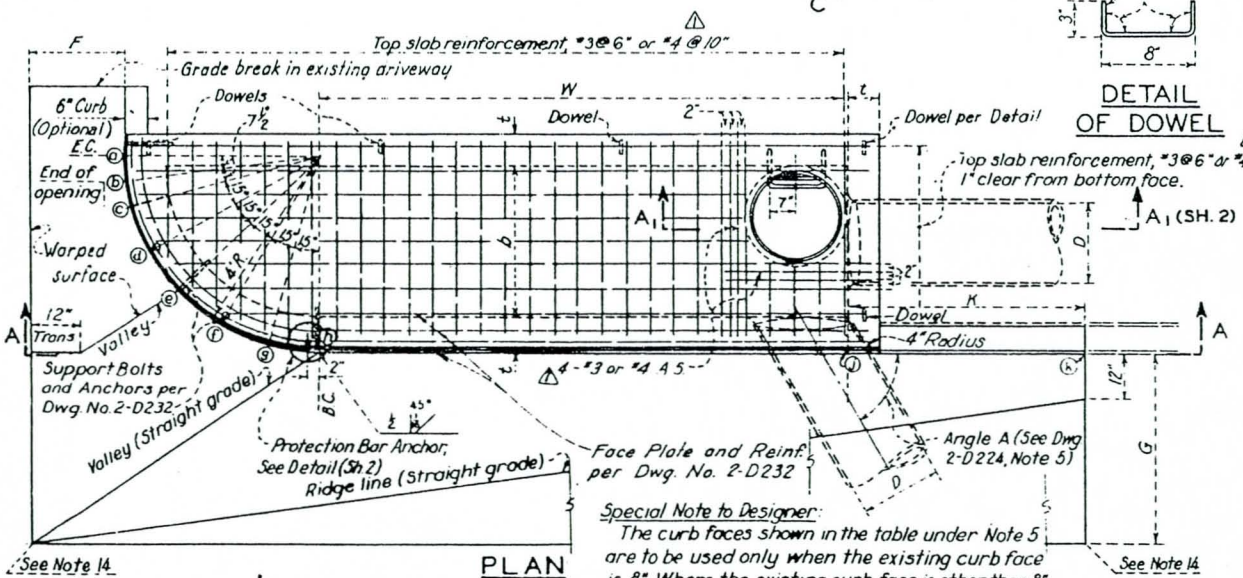

PLAN

DETAIL OF DOWEL

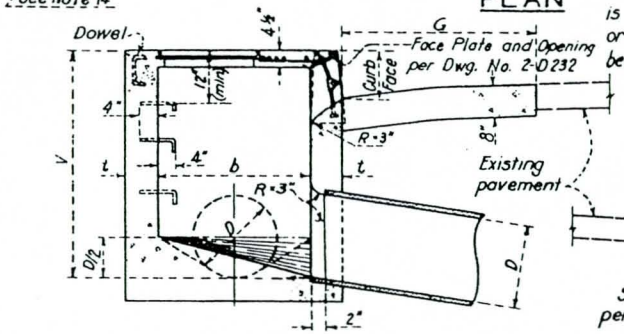

SECTION C-C

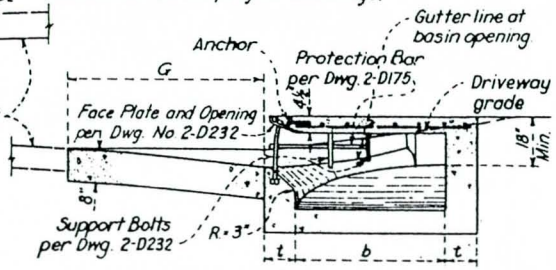

SECTION B-B

NOTES

1. Catch Basin shall be Case A unless otherwise specified.
2. The catch basin opening shall be constructed according to Standard Drawing No. 2-D232. Steel castings, mild to medium strength, of 4 ft. radius and like section shall be used on circular arc portion of the catch basin opening in place of steel plate.
   The castings shall be beveled and butt welded to the proper length, to a true arc, and secured to the top slab by anchors. One anchor shall be placed at each end of the assembly and the others spaced equally between the end anchors. There shall be at least one anchor on each casting.
3. Where one or more connector pipes inlet into the catch basin, an outlet chamber shall be constructed as shown in Section A_1-A_1, sheet 2.
4. Curvature of the lip and sidewalls at gutter opening shall be formed by curved forms.
5. Dimensions: V=5'-0" and b=3'-2" unless otherwise specified.

   t = 8" if V is between 4'-0" and 8'-0". t = 6" if V is 4'-0" or less.
   t = 10" if V is 8'-0" or more.
   W = 10'-0" unless otherwise specified
   F = 36" for Case A and 24" for Case B unless otherwise specified
   M = 3'-0" unless otherwise specified
   K = 5'-0" unless otherwise specified for Case A
   K = 3'-0" unless otherwise specified for Case B
   G = 4'-0" unless otherwise specified for Case A
   G = width of existing gutter with a minimum of 24" for Case B

   Curb face shall be as follows unless otherwise specified.

Point	a	b	c	d	e	f	g	h	j	k
Case A	4"	6"	7¾"	10½"	12"	12"	12"	12"	12"	Exist.
Case B	1¾"	3"	4½"	7½"	9"	9"	9"	9"	9"	Exist.

6. Floor of basin shall be given a steel-troweled surface and shall slope from all directions to the outlet.
7. Manhole shall be placed along back wall near outlet. See Dwg. No. 2-D157.
8. Outlet pipe shall be trimmed to the final shape and length before concrete is poured.

NOTES CONTINUED ON SHEET 2

Supersedes drawing of the same number dated November, 1958.

REVISIONS			LOS ANGELES COUNTY FLOOD CONTROL DISTRICT
MARK	DATE	DESCRIPTION	
△	2-1-74	#4 bar alternatives	CATCH BASIN NO. 8 CASE A PLAN, SECTIONS AND DETAILS

RECOMMENDED BY: DIVISION ENGINEER (DESIGN)
APPROVED BY: CHIEF ENGINEER 7/3-/71
APPROVAL RECOMMENDED BY: ASS'T CHIEF DEPUTY ENGINEER

SCALE	DATE	NO. 2-D249.1
NONE	8-1-71	SHEET 1 OF 3

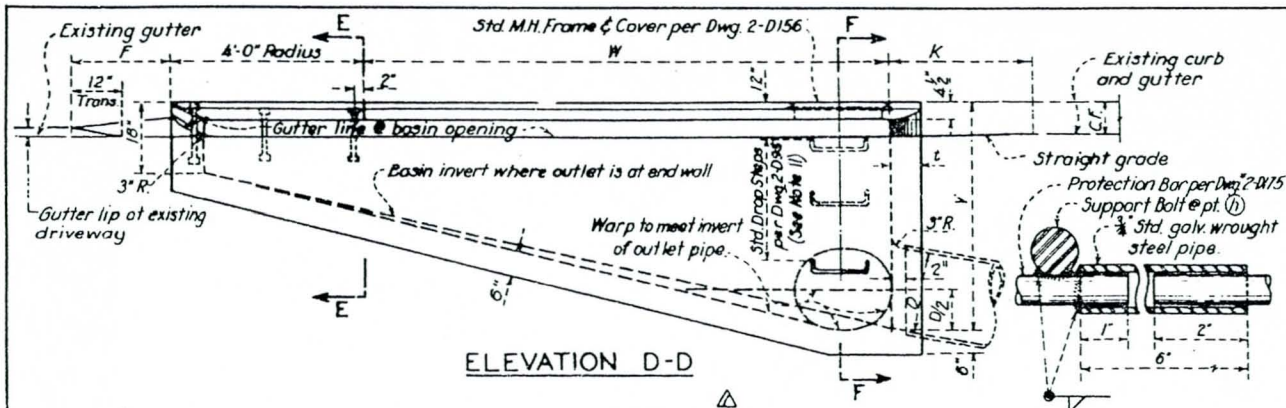

ELEVATION D-D

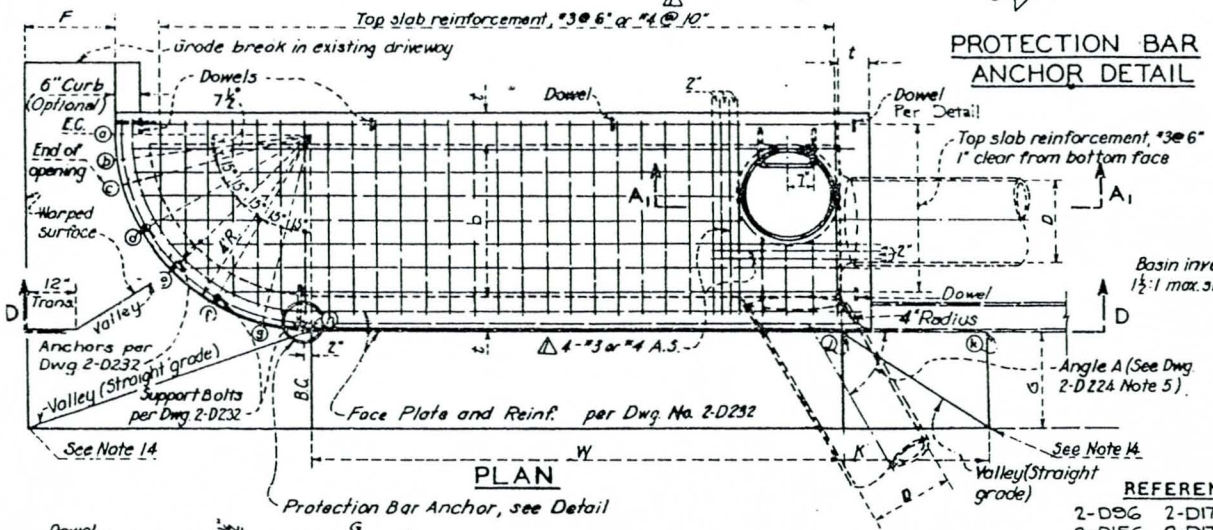

PLAN

PROTECTION BAR ANCHOR DETAIL

NOTES

9. Protection Bar: Installation of the protection bar shall be as required by Dwg. No. 2-D232. Bend to 4 ft. radius around curb return. Weld to support bolts at pts (d) (f) & (h). End bar at pt. (d).
10. Supports: Place supports per Dwg. No. 2-D232 and space the supports as shown hereon and per Dwg. No. 2-D175.
11. Steps: (Std. Dwg. No. 2-D96.) V to 3'-0" (incl.), place one step 12 inches above the floor of the catch basin. V over 3'-0", place steps at 12-inch intervals from the floor of the basin with the top step 12 in. (min) below the top of the manhole.
12. Surface of all exposed concrete shall conform in slope, grade, color, and finish to existing or proposed curb and walk adjacent to the basin.
13. Wall and floor reinforcement when reqd. shall be per Dwg. No. 2-D172
14. If no elevations are specified at outer corners of local depression, the edge shall conform to the finished street surface.
15. Where no curb exists, a curb shall be constructed between end of local depression and catch basin. The curb section shall conform to that of the controlling agency.
16. All concrete shall be 6.0-B-3000 mix.
17. All exposed edges, or corners, and concrete to metal frame edges shall be given ¼" radius edger finish.

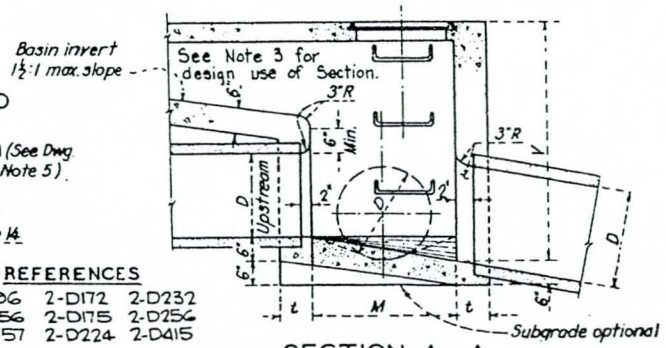

SECTION A_1–A_1
OUTLET CHAMBER

REFERENCES

2-D96	2-D172	2-D232
2-D156	2-D175	2-D256
2-D157	2-D224	2-D415

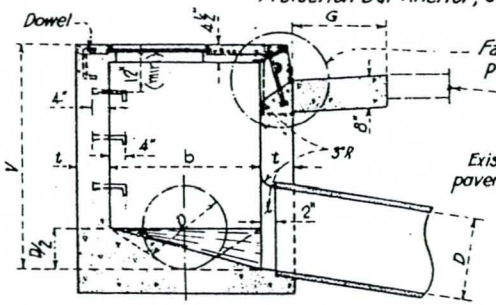

SECTION F-F

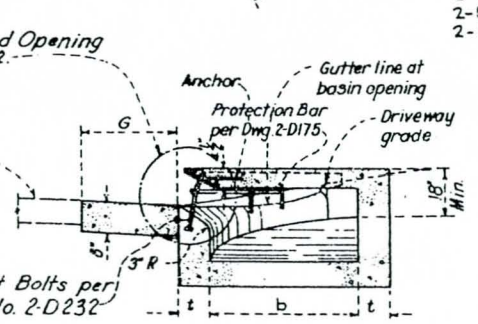

SECTION E-E

Supersedes drawing of the same number dated November, 1958.

REVISIONS		
MARK	DATE	DESCRIPTION
△	2-1-74	#4 bar alternatives

LOS ANGELES COUNTY FLOOD CONTROL DISTRICT

CATCH BASIN NO 8
CASE B

PLAN, SECTIONS AND DETAILS

RECOMMENDED BY: D. F. Mike — DIVISION ENGINEER (DESIGN)

APPROVED BY: A. E. Bruington 7/30/71 — CHIEF ENGINEER

APPROVAL RECOMMENDED BY: C. Magness — ASS'T CHIEF DEPUTY ENGINEER

SCALE	DATE	NO. 2-D249.2
NONE	8-1-71	SHEET 2 OF 3

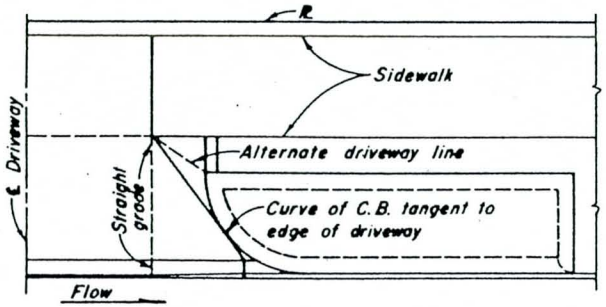

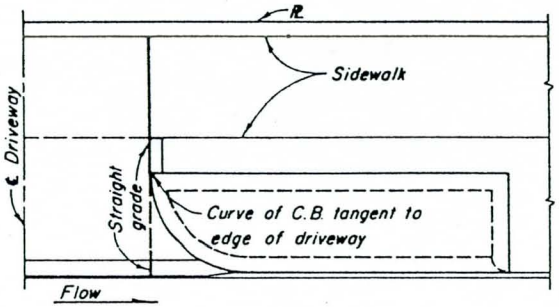

RESIDENTIAL DRIVEWAYS

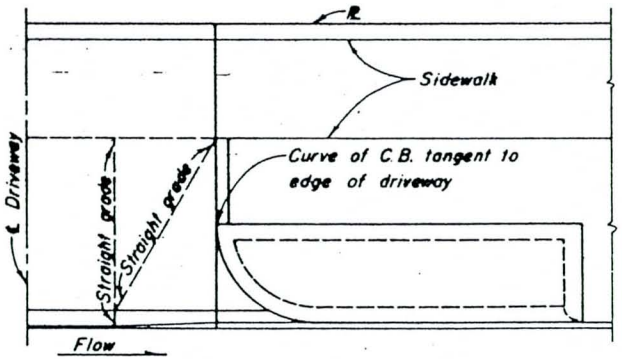

COMMERCIAL DRIVEWAY

NOTES TO DESIGNER

1. AVOID USING A CATCH BASIN NO. 8 ADJACENT TO A SKEWED DRIVEWAY, OR ANY DRIVEWAY WHICH WILL BE WIDENED EXCESSIVELY IF CONSTRUCTED.
2. AVOID USING A CATCH BASIN NO. 8 ADJACENT TO A DRIVEWAY WHICH ACCOMMODATES A LARGE VOLUME OF HEAVY TRUCK TRAFFIC, OR ADJACENT TO A GASOLINE STATION.
3. THE DESIGNER SHOULD FIELD CHECK PROPOSED LOCATIONS TO DETERMINE IF ABOVE RESTRICTIONS APPLY AND IF ANY EXISTING FACILITIES WILL INTERFERE WITH CONSTRUCTION. CONSIDERATION SHOULD BE GIVEN TO THE USE OF A CATCH BASIN NO. 6 WHEN CONDITIONS DO NOT FAVOR THE USE OF A CATCH BASIN NO. 8.

DRAWN BY	REVISIONS		
B.T.B.	MARK	DATE	DESCRIPTION
CHECKED BY V.C.M.			
DESIGNED BY F.W.R.			
SUBMITTED BY C.W.H.			

LOS ANGELES COUNTY
FLOOD CONTROL DISTRICT

CATCH BASIN NO. 8

LOCATION DETAILS

RECOMMENDED BY D. F. Milne — DIVISION ENGINEER (MEMBER)

APPROVAL RECOMMENDED BY C. Magnuson — ASS'T CHIEF DEPUTY ENGINEER

APPROVED BY A. E. Bivington — CHIEF ENGINEER 7/30/71

SCALE	DATE	DWG. NO. 2-D249.3
NONE	8-1-71	SHEET 3 OF 3

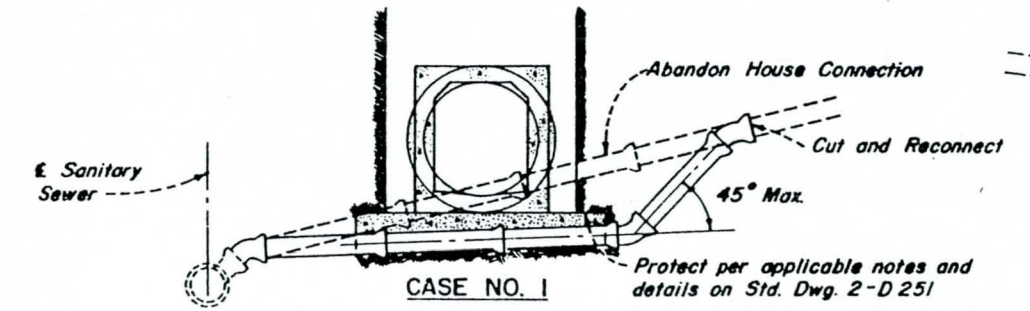

CASE NO. 1

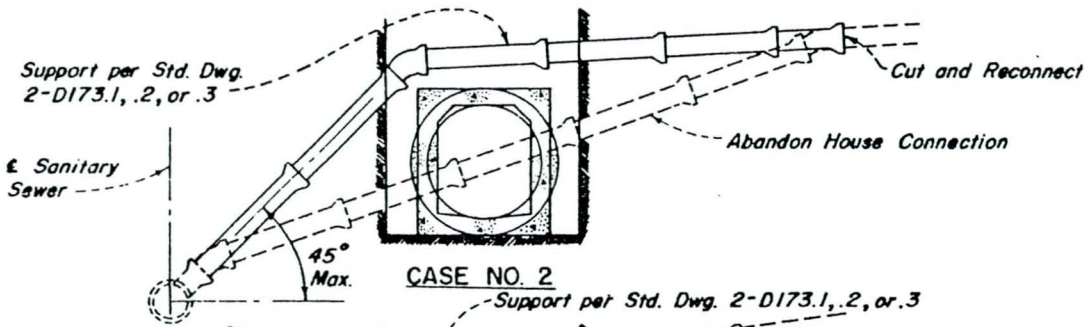

CASE NO. 2

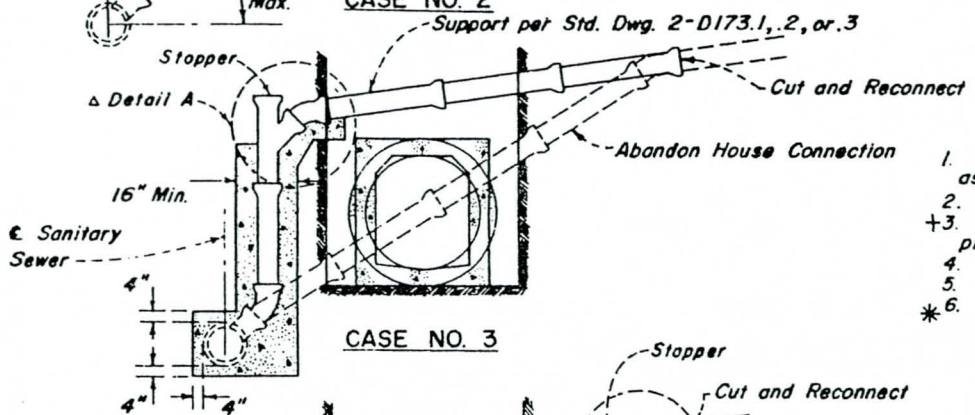

CASE NO. 3

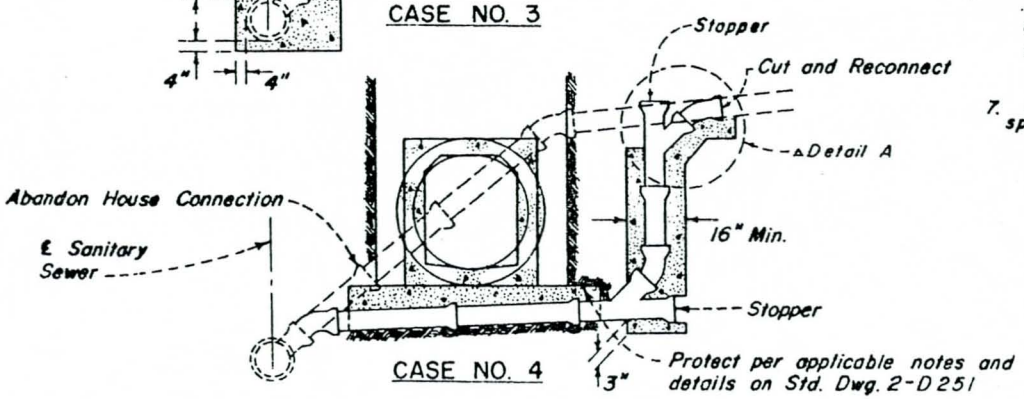

CASE NO. 4

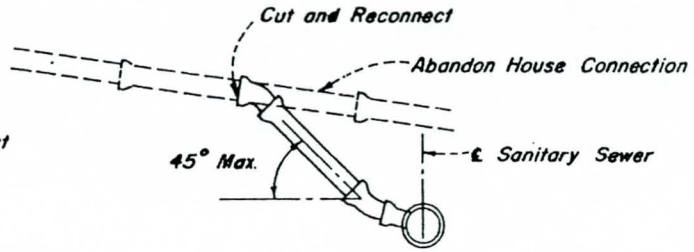

CASE NO. 5

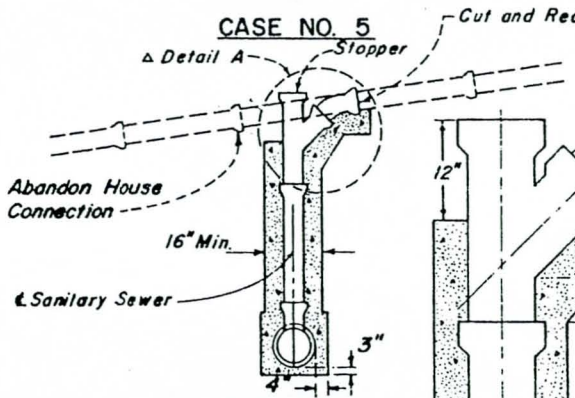

CASE NO. 6

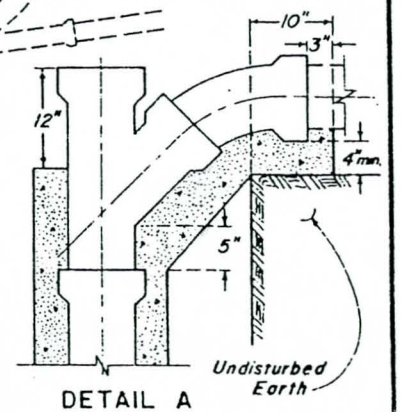

DETAIL A

NOTES

1. All house connections shall be vitrified clay pipe, 6 inches in diameter, except as otherwise required on Standard Drawing No. 2-D 251.
2. The minimum slope for 6 inch house connections shall be ¼ inch per foot.
+3. A 6 inch saddle shall be used where necessary and shall be connected to the pipe constituting the existing Y or T, or to the next lower pipe length.
4. Y's may be laid "flat" upon approval of the Engineer.
5. Concrete for chimneys shall be △1 420-C-2000 or better.
✱6. When sanitary sewer house connections are supported on concrete supports, then such house connections shall be encased per detail for concrete encasement shown on Standard Drawing No. 2-D251, and the concrete supports for the house connections shall be lengthened and widened to fully support such encasement.

7. Chimneys shown are pictorial only, and the actual chimney constructed at any specific location shall meet the approval of the jurisdictional agency involved.

REVISIONS		
MARK	DATE	DESCRIPTION
✱	6-19-61	REVISED NOTE
+	5-18-66	REVISED NOTE
△	4-19-67	ADDED DETAIL A
△1	4-1-72	REVISED CONCRETE DESIGNATION

LOS ANGELES COUNTY FLOOD CONTROL DISTRICT

REMODELING OF SANITARY SEWER HOUSE CONNECTIONS

DRAWN BY H.C.L. DESIGNED BY H.C.L.
TRACED BY W.H.L.
CHECKED BY R.B.R. SUBMITTED BY
RECOMMENDED BY DIVISION ENGINEER (Design)
APPROVED BY CHIEF ENGINEER

SCALE NONE | DATE NOV. 58 | NO. 2-D 250 | SHEET 1 OF 1

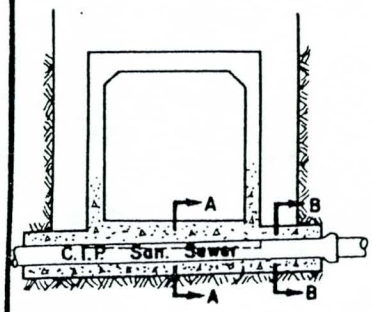

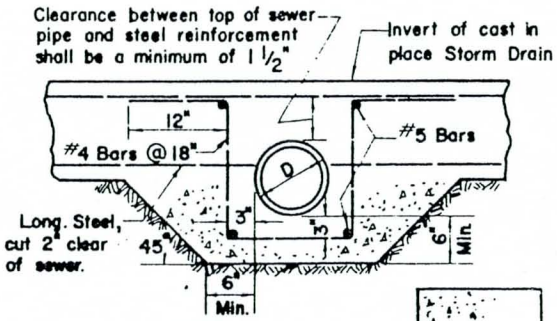

SECTION A-A

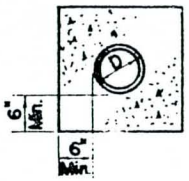

SECTION B-B

CASE I

For existing and new sewers less than 15 inches in diameter where clearance between bottom of Cast in Place Storm Drain and top of San. Sewer is less than 6 inches, and where the sewer is approximately at right angles to the Storm Drain.

✱ The sanitary sewer shall be C.I.P. unless otherwise specified.

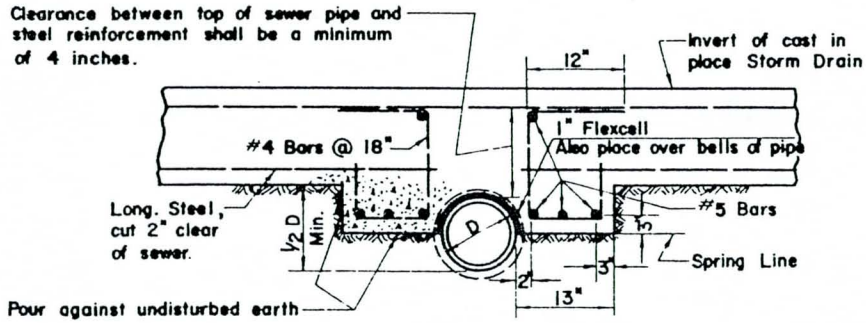

CASE II

For existing sanitary sewers less than 15 inches in diameter where existing sewer is to be maintained in place and where clearance between bottom of Cast in Place Storm Drain and top of sanitary sewer is less than 6 inches.

The encasement for the sewer between the limits of the encasement and the face of the storm drain shall be as shown in Case IV, Sec. D-D.

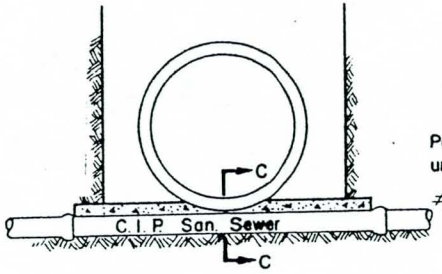

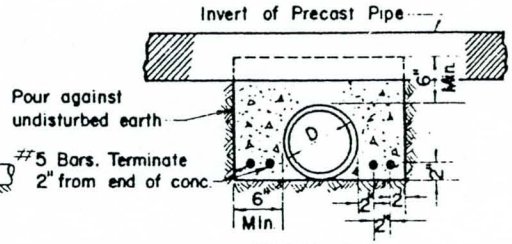

SECTION C-C

CASE III

✱ Where clearance between bottom of Precast Pipe Storm Drain and top of sanitary sewer is less than 6 inches. Sanitary sewer shall be C.I.P. unless otherwise specified.

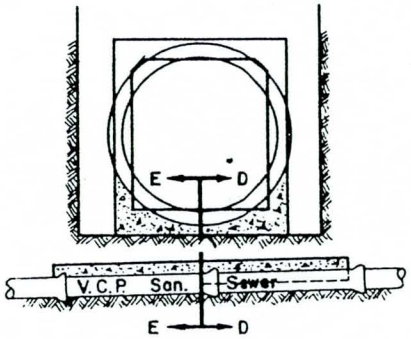

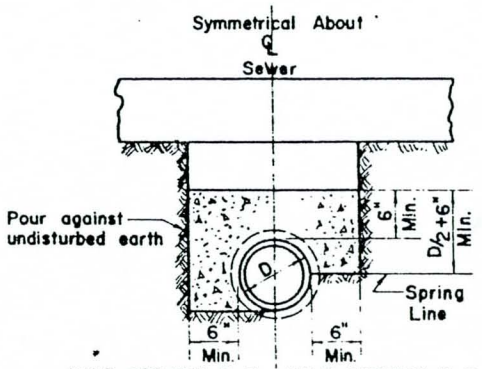

HALF SECTION E-E
Use when sewer is being constructed and is less than 15" in dia.

HALF SECTION D-D
Use when sewer is existing or 15" in dia. or larger.

CASE IV

Where clearance between bottom of Precast Pipe or Cast in Place Storm Drain and top of sanitary sewer is from 6 inches to 18 inches.

GENERAL NOTES

1. Where C.I.P. is called for, the Sanitary Sewer shall be constructed or replaced with standard cast iron soil pipe in the case of house connections, or with class "B" or class "150" cast iron pipe in the case of main line sewers.
2. △ Concrete for encasements shall be per adjacent structure, except Case III and Case IV which shall be △ 420-C-2000 portland cement concrete.
3. The concrete encasement shall extend across the full width of the storm drain trench plus an additional 12 inches into undisturbed earth on each side of the storm drain trench.
4. ✱ C.I.P. shall not be used for Los Angeles County Sanitation District sanitary sewers or for City of Long Beach sanitary sewers.

Supersedes drawing of same number dated NOV. 58

REVISIONS		
MARK	DATE	DESCRIPTION
△	9-6-62	Revised Note 2
✱	11-3-67	Added Note 4
△	4-1-72	Revised concrete designation

LOS ANGELES COUNTY FLOOD CONTROL DISTRICT

PROTECTION FOR MAIN LINE AND HOUSE CONNECTION SEWERS

DRAWN BY ____ DESIGNED BY ____
TRACED BY G.R.F.
CHECKED BY R.W.R. SUBMITTED BY C.W.H.
RECOMMENDED BY H. B. Rocheleau DIVISION ENGINEER (DESIGN)

APPROVED BY Ralph Bailey CHIEF ENGINEER

SCALE	DATE	NO. 2-D251
NONE	JULY 61	SHEET 1 OF 1

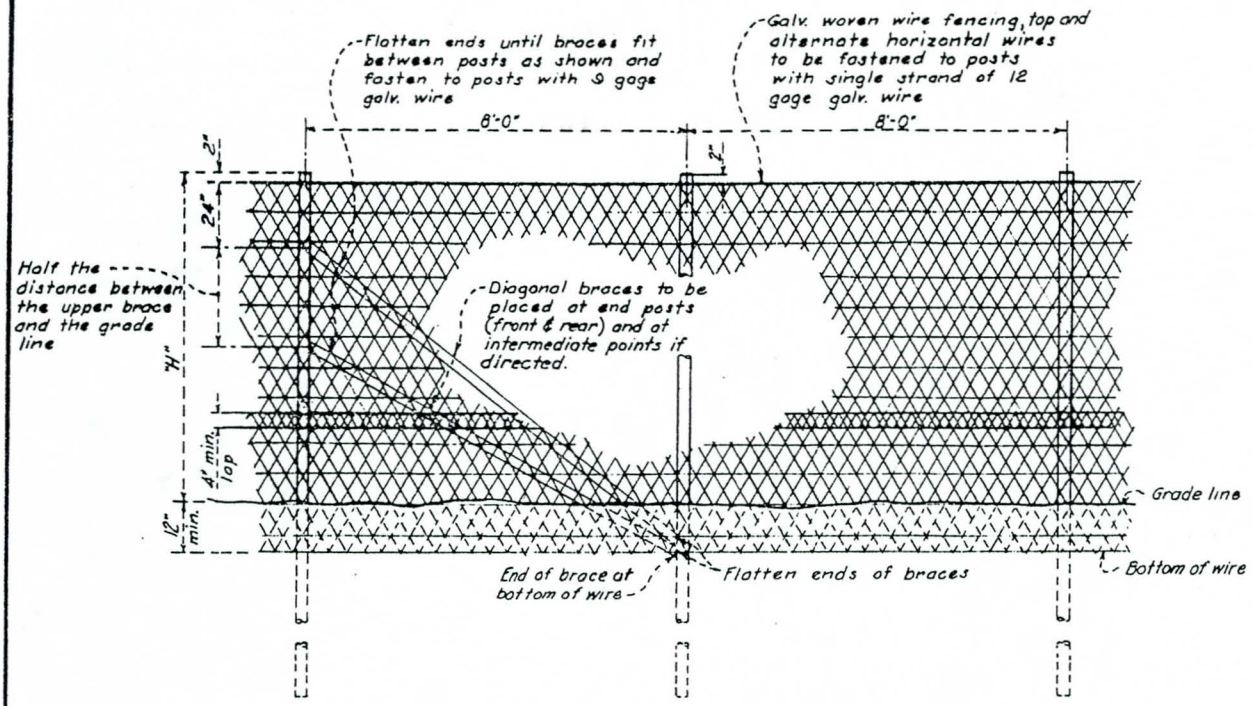

TYPICAL ELEVATION

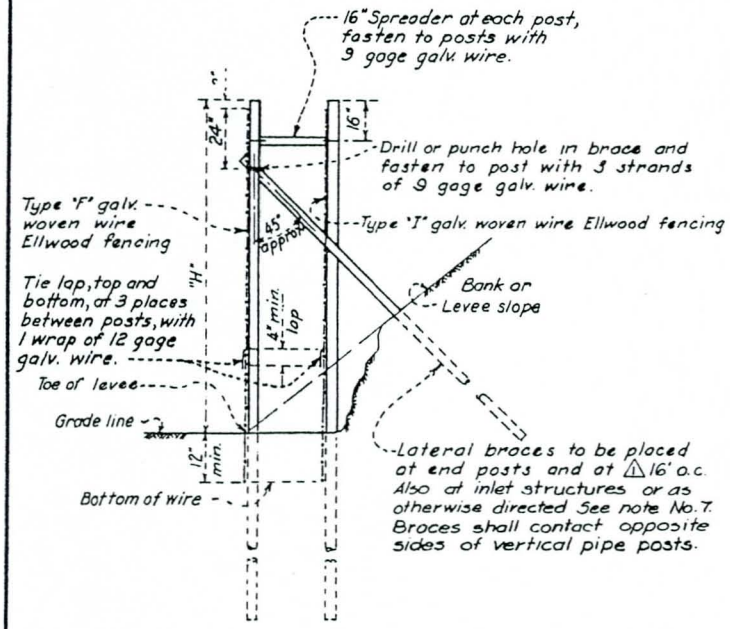

TYPICAL SECTION

Notes:

1. Height 'H' is shown on the Construction Plans.
2. Length of posts shall be 2H or 10' whichever is greater.
3. Length of lateral braces shall be 1.5"H" min.
4. Posts, braces, and spreaders shall be 2½" O.D. boiler tube or equivalent.
5. Widths of woven wire fencing varies, depending on height "H".
6. Boiler tube may be used material.
7. △ Lateral braces may be required at 8' o.c. in unstable areas. Refer to project drawings for affected reach.

THIS DWG. SUPERSEDES DWG. NO. 2-D77.1

REVISIONS			LOS ANGELES COUNTY FLOOD CONTROL DISTRICT
MARK	DATE	DESCRIPTION	
△	1-19-71	Added note on lateral braces.	STANDARD DOUBLE PIPE AND WIRE REVETMENT

DRAWN BY R.E.J. | DESIGNED BY C.F.E. | APPROVED BY M. Schlesinger, CHIEF ENGINEER
TRACED BY | CHECKED BY C.F.E. | SUBMITTED BY D.N.M.
RECOMMENDED BY Fred Cutland, DIVISION ENGINEER (DESIGN)

SCALE: NONE | DATE: MARCH 1959 | NO. 2-D253 | SHEET 1 OF 1

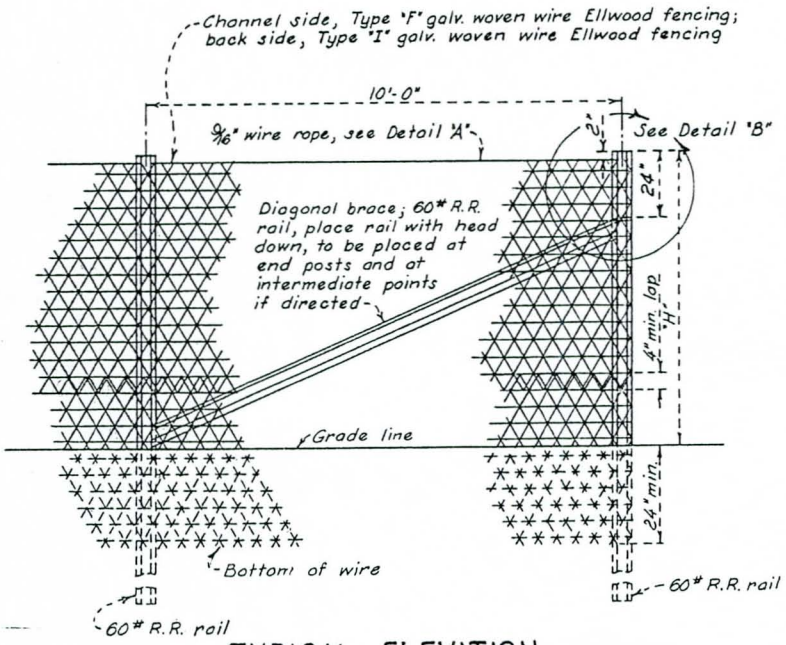

TYPICAL ELEVATION

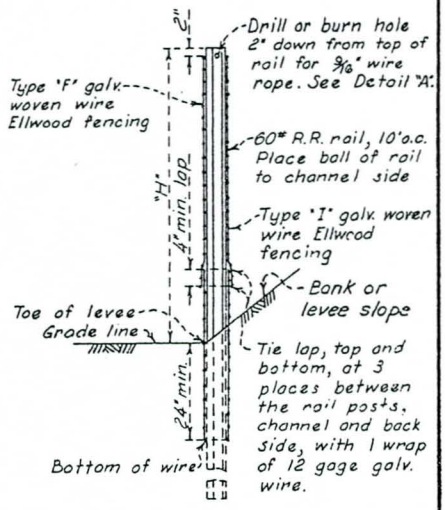

TYPICAL SECTION

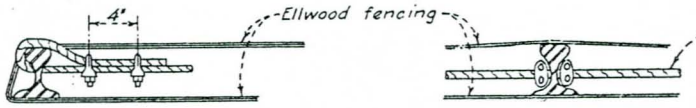

Return fencing around end rail. Secure wire rope at ends as shown.

Fencing to be fastened to rails at top and at alternate horizontal wires with 2 strands of 12 gage galv. wire

DETAIL "A"

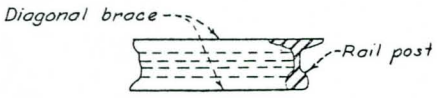

SECTION C-C

Notes:
1. Height "H" is shown on the Construction Plans.
2. Length of posts shall be 2"H" min.
3. Posts and braces shall be 60# R.R. rails.
4. 60# R.R. rails and 9/16" wire rope may be used material.
5. Widths of woven wire fencing varies, depending on height "H".

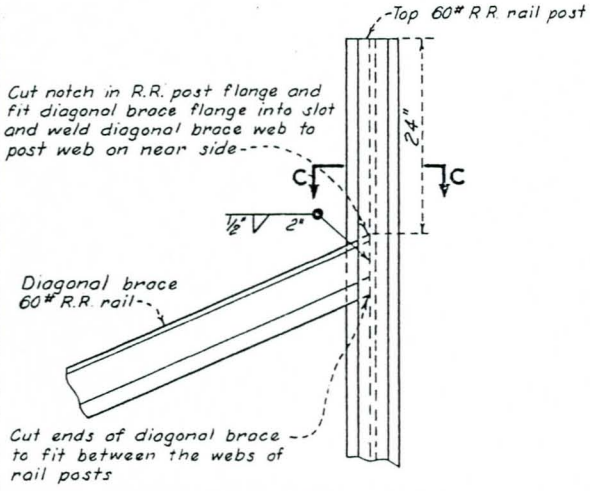

DETAIL "B"

REVISIONS			LOS ANGELES COUNTY FLOOD CONTROL DISTRICT
MARK	DATE	DESCRIPTION	STANDARD RAIL AND WIRE REVETMENT

DRAWN BY F.G.J. | DESIGNED BY C.F.E.
TRACED BY | SUBMITTED BY D.N.M.
CHECKED BY C.F.E.
RECOMMENDED BY G.W. Cutland, DIVISION ENGINEER (DESIGN)
APPROVED BY M.E. Salsbury, CHIEF ENGINEER

SCALE: NONE | DATE: MARCH 1959 | NO. 2 - D254 | SHEET 1 OF 1

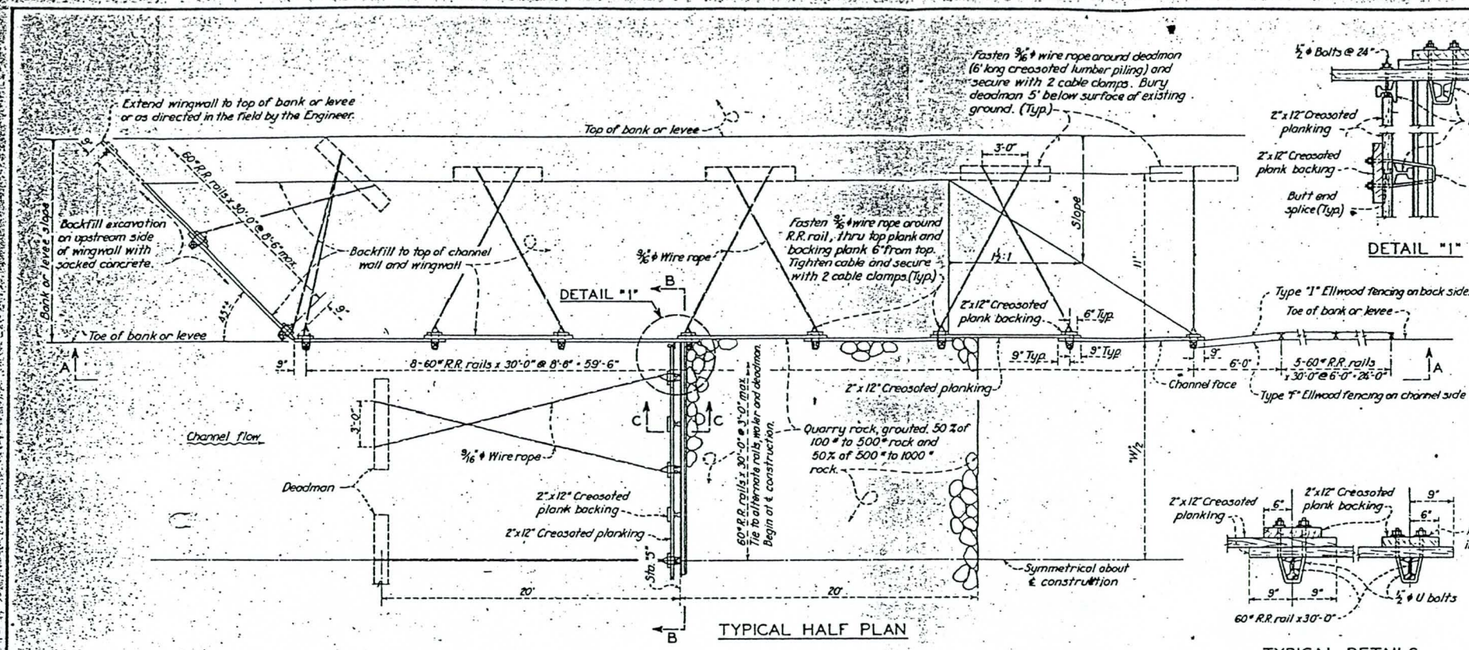

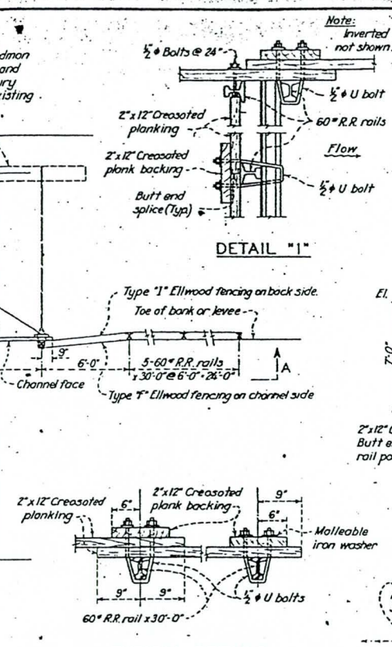

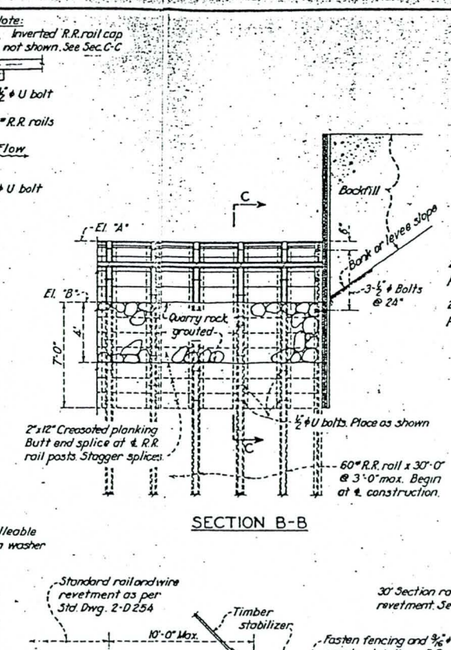

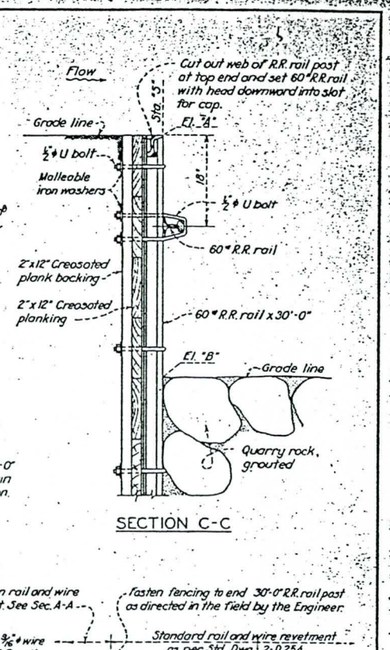

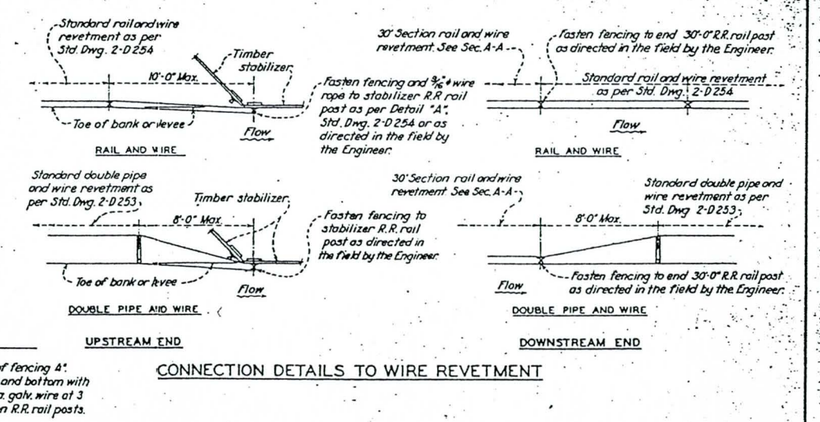

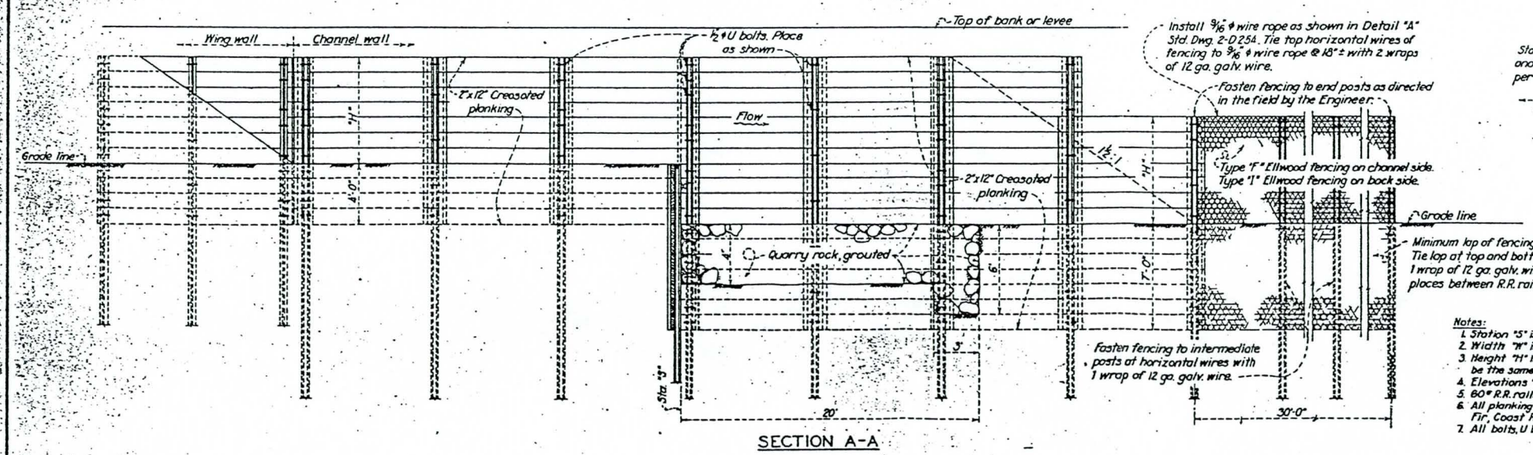

Notes:

1. Station "S" is shown on the Construction Plans.
2. Width "W" is shown on the Construction Plans.
3. Height "H" is shown on the Construction Plans or shall be the same as the adjoining revetment.
4. Elevations "A" & "B" are shown on the Construction Plans.
5. 60" R.R. rails and 9/16" ϕ wire rope may be used materials.
6. All planking and backing shall be creosoted Douglas Fir, Coast Region, Standard Grade, Rough.
7. All bolts, U bolts, nuts and washers shall be galvanized.

REVISIONS		
MARK	DATE	DESCRIPTION

LOS ANGELES COUNTY FLOOD CONTROL DISTRICT

STANDARD RAIL AND TIMBER STABILIZER

DRAWN BY K.S. | DESIGNED BY O.P.B. | APPROVED BY [signature] CHIEF ENGINEER
TRACED BY R.E.J. | CHECKED BY G.W.H. | SUBMITTED BY D.H.M.
RECOMMENDED BY [signature] DIVISION ENGINEER

SCALE NONE | DATE MARCH 1958 | NO. 2-D255 | SHEET 1 OF 1

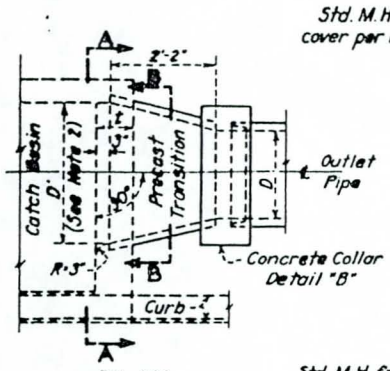

PLAN

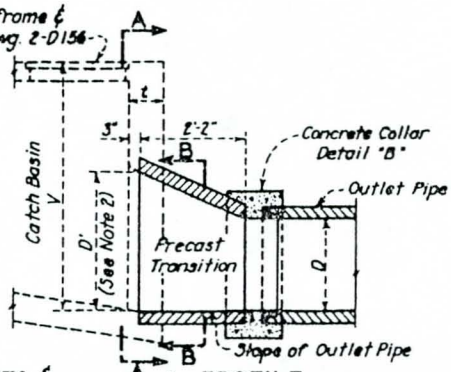

℄ PROFILE

CASE 1

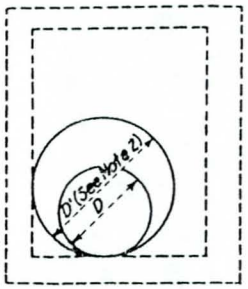

SECTION A-A

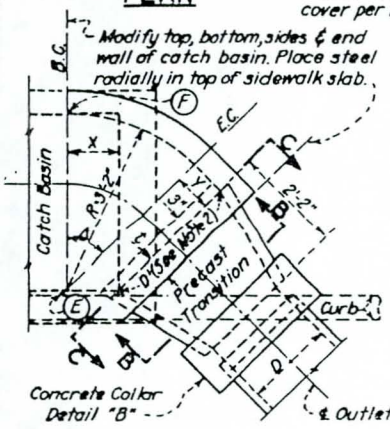

PLAN

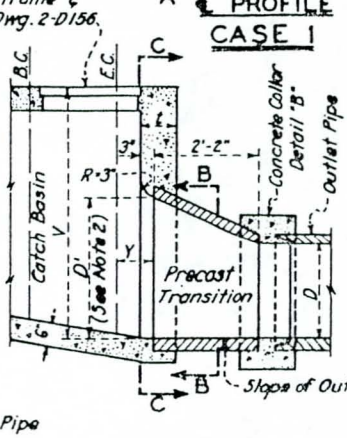

℄ PROFILE

CASE 2

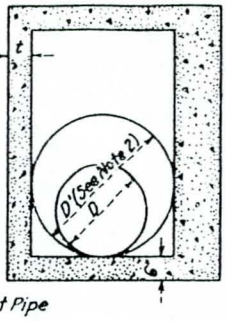

SECTION C-C

TABLE A

D	Δ	X	Y
18"	30°	16"	13 7/8"
	45°	11 3/4"	8"
	60°	9 1/4"	4 1/2"
21"	30°	10"	8 3/8"
	45°	7 1/8"	5"
	60°	5 3/4"	2 1/4"
24"	30°	4"	3 1/2"
	45°	2 7/8"	2"
	60°	2 1/4"	1 1/8"
27" to 36"	30°	0	0
	45°	0	0
	60°	0	0

Values of X and Y calculated from the following formulas:

$$X = \frac{R-D'}{\sin \Delta}$$

$$Y = \frac{R-D'}{\tan \Delta}$$

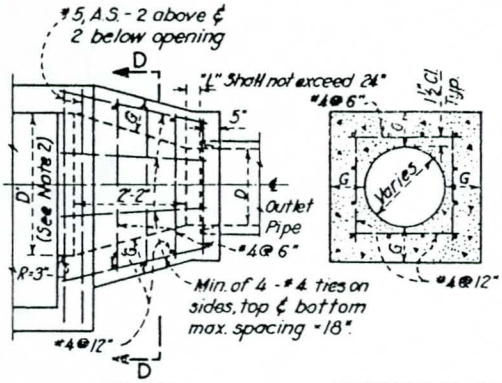

PLAN

SECTION D-D

TABLE B

D	G
18"	6"
21"	6 1/4"
24"	6 1/2"
27"	7"
30"	7 1/2"
33"	7 3/4"
36"	8"

DETAIL A

MONOLITHIC TRANSITION

SEE NOTE 1

SECTION B-B

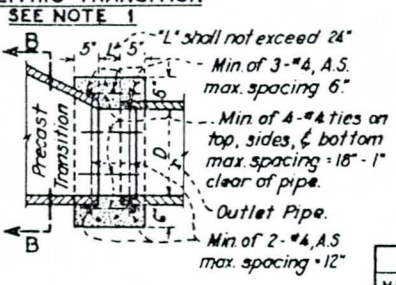

DETAIL B

SQUARE CONCRETE COLLAR

NOTES

1. Transition may be either precast (Section B-B) or monolithic (Detail A) at contractor's option for either Case 1 or Case 2.
2. Dimensions: Catch Basin wall and slab thickness, V depth and reinforcement shall be as shown on the catch basin standard drawings or on the project drawings.

   The transition diameter shall vary uniformily from D to D'. D' shall be equal to D+12" but shall not exceed a maximum of 3'-2" unless otherwise shown on the project drawings.

   Δ may be any value 90° or less, and shall be shown on the project drawings. Where Δ or R differs from the values shown in Table A, values of X and Y as calculated from the formulas under Table A shall be shown on the project drawings.
3. Precast transition shall be reinforced for 1250-D for D + 12" concrete pipe.
4. Concrete collar (Detail "B") shall be used only to join the precast transition with the outlet pipe.
5. f'_c = 3000 p.s.i. at 28 days.
6. Floor of basin shall be troweled to a hard, smooth surface and shall slope from all directions to the outlet.
7. Manhole shall be placed along back wall near outlet (See Dwg No. 2-D157).
8. Curvature of the rounded edges of the outlet and sidewalls shall be formed by curved forms and shall not be made by plastering.
9. Surface of all exposed concrete shall conform in slope, grade, color, finish and scoring to existing or proposed curb and walk adjacent to the basin.
10. Outlet pipe shall be trimmed to final slope and length before concrete is poured.
11. Transition structure (Case 2) may be constructed in any direction by rotating it about either points "E" or "F".

REVISIONS		
MARK	DATE	DESCRIPTION

LOS ANGELES COUNTY FLOOD CONTROL DISTRICT

CATCH BASIN OUTLET TRANSITION STRUCTURE

PLAN, SECTIONS AND DETAILS

DRAWN BY B.E.S.
TRACED BY B.E.S.
CHECKED BY C.W.H.
RECOMMENDED BY F.W. Outland, DIVISION ENGINEER DESIGN
DESIGNED BY A.W.
SUBMITTED BY D.M.M.
APPROVED BY W.E. Selburn, CHIEF ENGINEER

SCALE	DATE	NO. 2-D256
NONE	JULY 1958	SHEET 1 OF 1

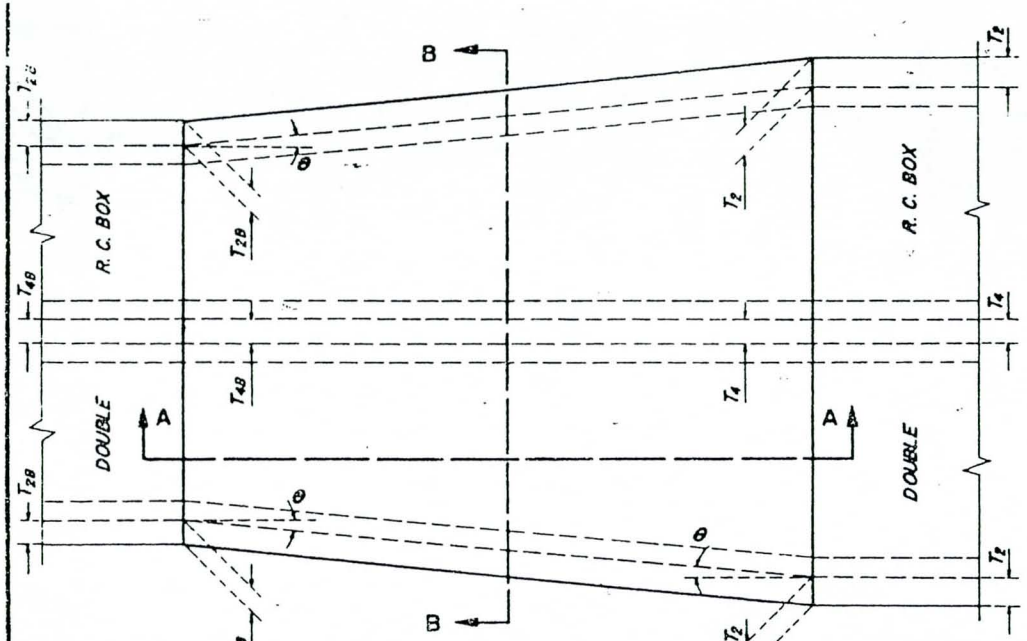

PLAN

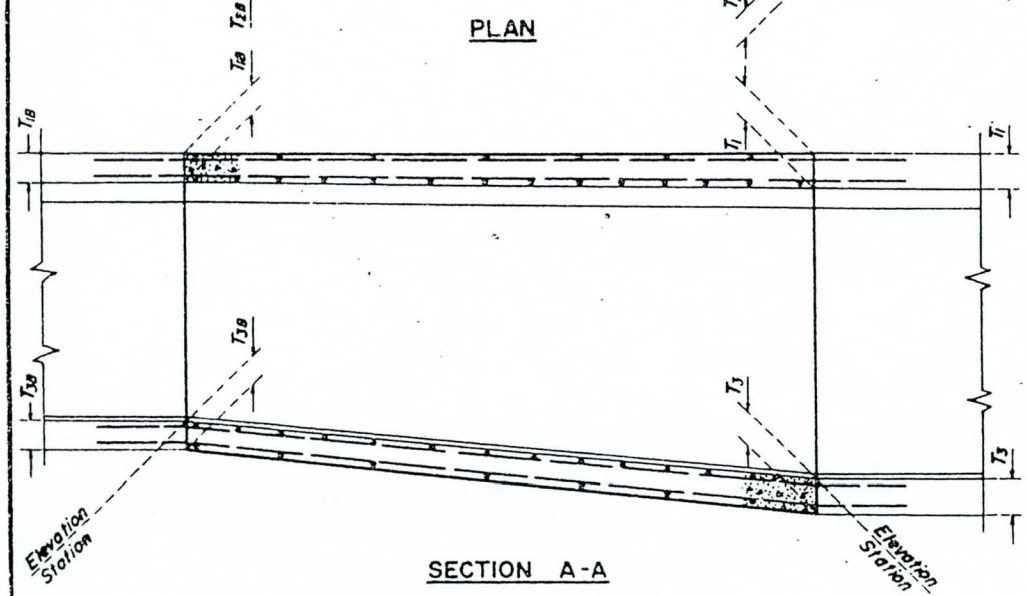

SECTION A-A

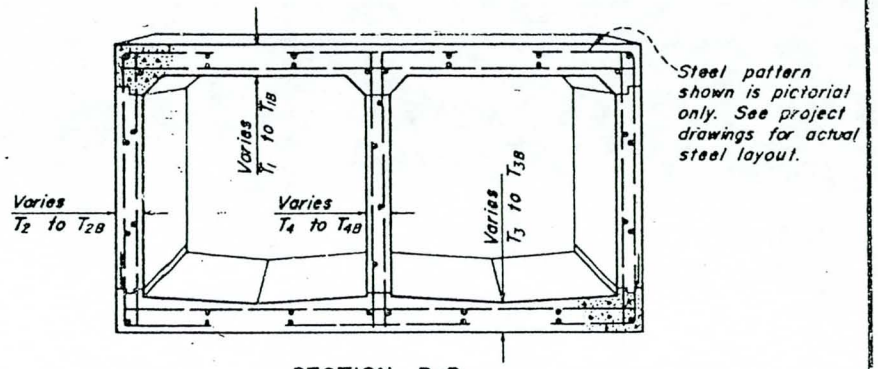

SECTION B-B

NOTES

1. Horizontal angle of divergence or convergence, θ, shall not exceed 5°45'.
2. Reinforcing steel bar size, spacing, lengths, and outside cover shall be that of whichever adjoining box section provides the greater steel area for each type of bar. Longitudinal bars shall be continued through the joints with the transition structure.
3. The thicknesses of the walls and slabs shall be those of the adjoining box section at each end of the transition and shall vary uniformly between the two ends.
4. $f'_c = 3000$ p.s.i. at 28 days.
5. Transverse joint keyways, as detailed for longitudinal joint keyways at base of outer walls on the project drawings, shall be placed in both slabs and walls at the end of each pour.
6. The transition structure shall be constructed in accordance with the general structural notes applying to box structures shown on the project drawings.

SUPERSEDES STD. DWG. NO. 2-D199

REVISIONS		
MARK	DATE	DESCRIPTION

LOS ANGELES COUNTY FLOOD CONTROL DISTRICT

TRANSITION STRUCTURE NO. 5

PLAN & SECTIONS

DRAWN BY D.Y.H. DESIGNED BY R.J.S.
TRACED BY
CHECKED BY SUBMITTED BY R.B.R.
RECOMMENDED BY G.W. Outland DIVISION ENGINEER (DESIGN)
APPROVED BY W.E. Selkirk CHIEF ENGINEER

SCALE NONE | DATE SEPT 1958 | NO. 2-D260 SHEET 1 OF 1

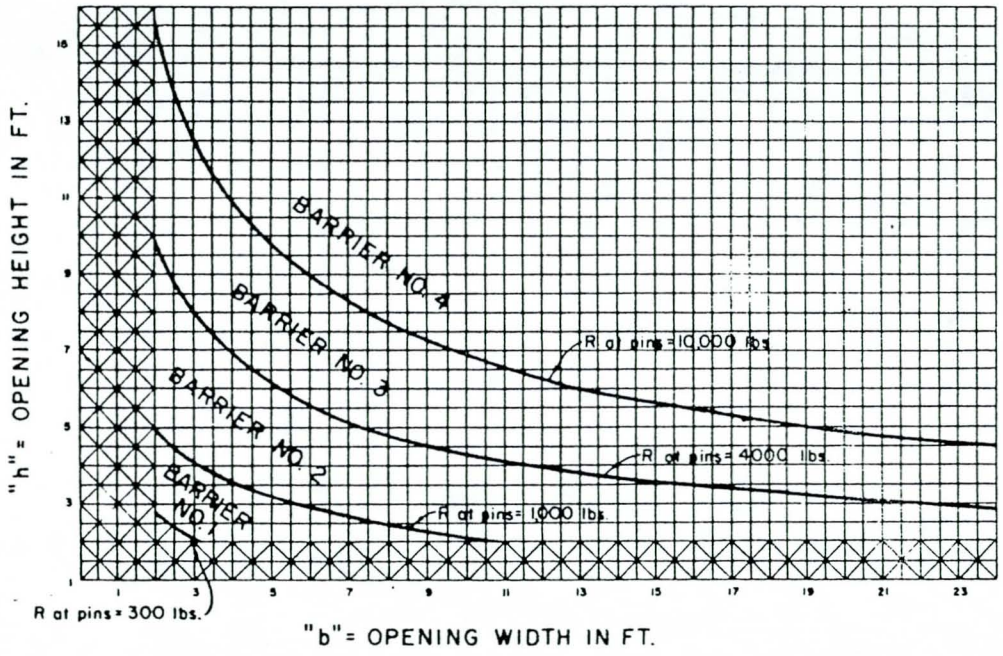

The curves represent reactions at the shear pins due to hydrostatic head on the debris-obstructed barriers.

The height and width of the openings determines which barrier (see sheet 3), numbers 1, 2, or 3 between the curves, or number 4 beyond the curves, is to be used.

For sizes of openings falling within the crosshatched area, and if approved by the District, protection bars shall be placed in accordance with District Std. Dwg. 2-D175 with the bars positioned horizontally at 6 ½" c.c.

Note: Barrier number shall be specified on project drawings.

DRAWN BY	REVISIONS		
P.M.M.	MARK	DATE	DESCRIPTION
CHECKED BY K.O.			
DESIGNED BY C.W.H.-K.O.			
SUBMITTED BY C.W.H.			

SUPERSEDES DRAWING
2-D261 DATED SEPT., 1959

LOS ANGELES COUNTY
FLOOD CONTROL DISTRICT

PROTECTION BARRIER

DESIGN CHART

RECOMMENDED BY C.F. Caldwell DIVISION ENGINEER - MAINT.
APPROVAL RECOMMENDED BY Milton W. Ransom ASS'T CHIEF DEPUTY ENGINEER
APPROVED BY Walter J. Wood 3/6/67 CHIEF ENGINEER

SCALE	DATE	DWG. NO. 2-D261.1
NONE	JAN. 10, '67	SHEET 1 OF 3

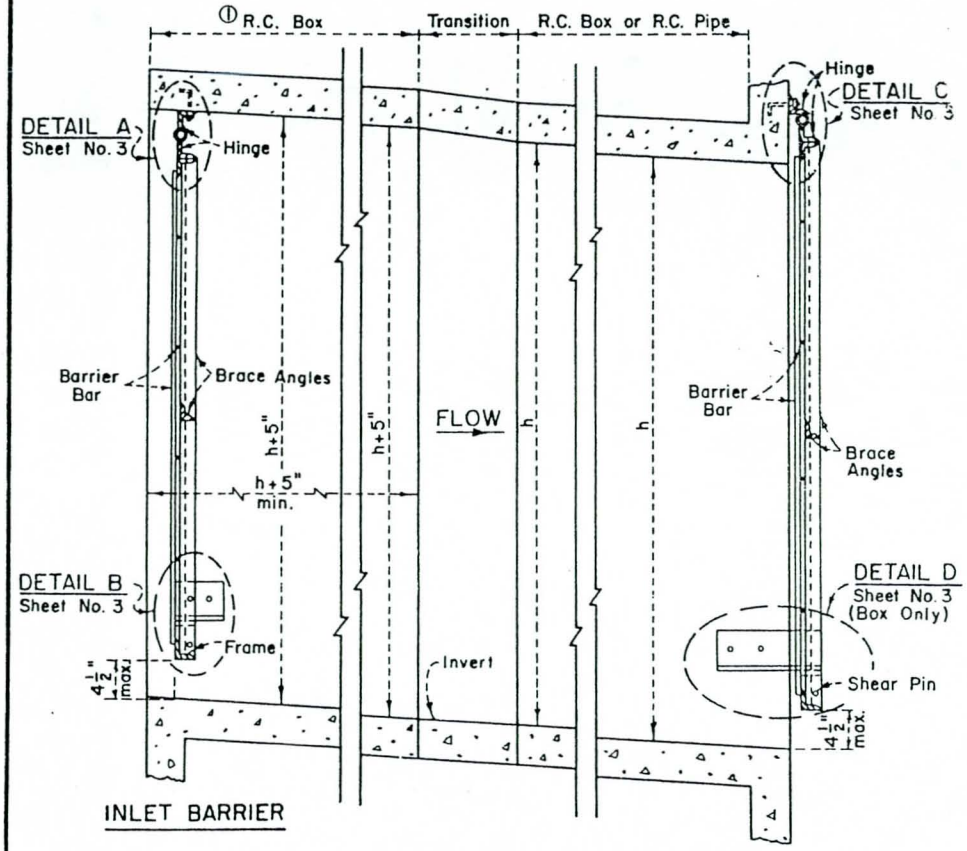

SECTION
ALONG ℄

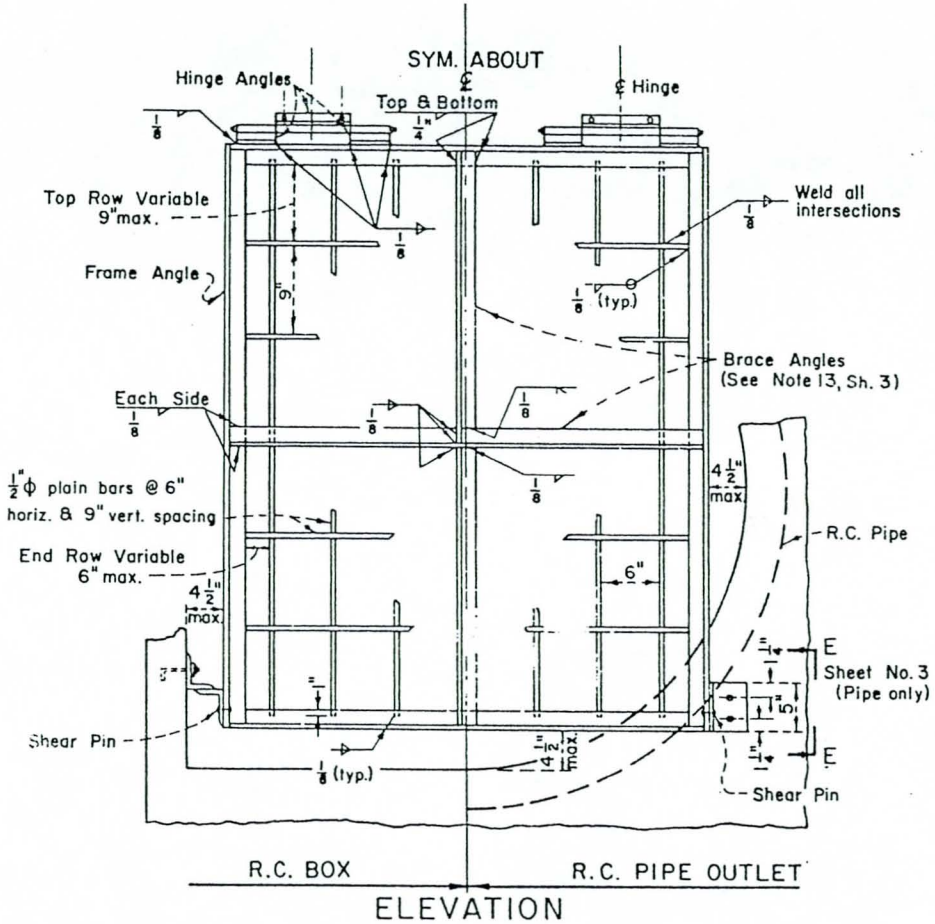

ELEVATION

NOTE: For Protection Barrier member sizes, see Sheet 3.

① Structural Design Details of R.C Box containing Inlet Barrier shall be delineated on the Project Drawings.

SUPERSEDES DRAWING
2-D 261 DATED SEPT. 1959

DRAWN BY	REVISIONS		
P.M.M.	MARK	DATE	DESCRIPTION
CHECKED BY K.O.	①	6-21-67	Revised
DESIGNED BY C.W.H.-K.O.			
SUBMITTED BY C.W.H.			

LOS ANGELES COUNTY
FLOOD CONTROL DISTRICT

PROTECTION BARRIER

SECTION AND ELEVATION

RECOMMENDED BY C. F. Ashelby, DIVISION ENGINEER (DESIGN)
APPROVAL RECOMMENDED BY William W. Ransom, ASS'T CHIEF DEPUTY ENGINEER
APPROVED BY Walter J. Wood, CHIEF ENGINEER

SCALE	DATE	DWG. NO. 2-D261.2
NONE	JAN. 10, '67	SHEET 2 OF 3

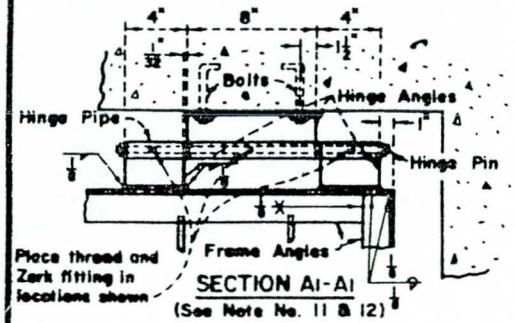

SECTION A1-A1
(See Note No. 11 & 12)

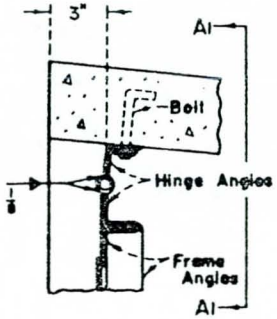

DETAIL A
(See Note No. 12)

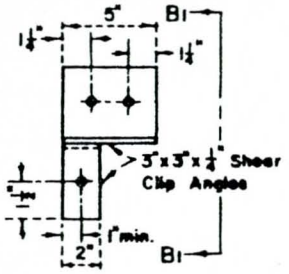

DETAIL B

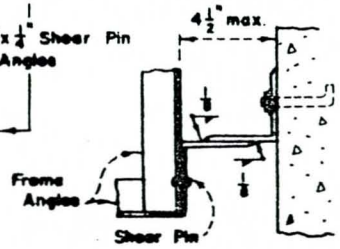

SECTION B1-B1

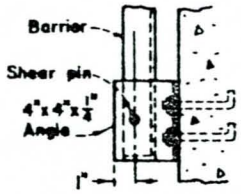

SECTION E-E
(See ELEVATION, Sheet 2) for pipe only

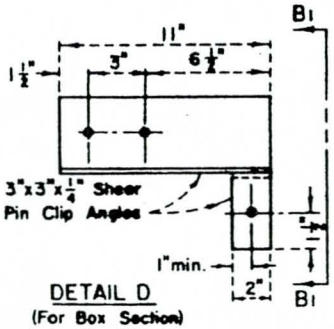

DETAIL D
(For Box Section)

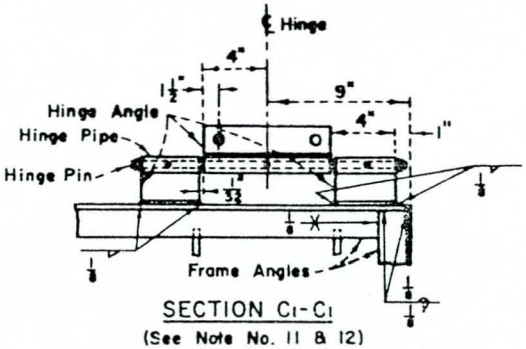

SECTION C1-C1
(See Note No. 11 & 12)

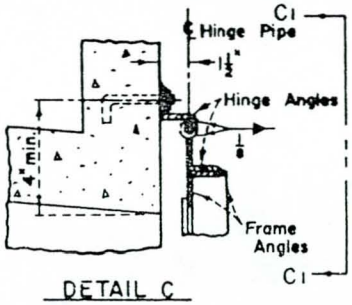

DETAIL C

GENERAL NOTES:

1. Angles connected with shear pins shall fit snugly and truly face to face.
2. The shear pin holes shall be drilled so as to provide a tight fit with the shear pins in place.
3. All shear pins shall be peened on both ends after installation.
4. The aluminum shear pin material will be furnished by the District to the Contractor.
5. All 5/8-inch diameter bolt holes shall be drilled on the gage lines of the angles.
6. All bolts shall be 5/8-inch in diameter embedded a minimum of 4 inches into concrete, or equivalent expansion bolts, and shall be furnished with hex nuts and metallic washers at least 3/32-inch thick.
7. Frame, brace, and hinge angles shall have the outstanding legs facing in the direction of flow for both inlets and outlets, see Section sheet 2.
8. Thread ends of hinge pin so that nuts and lock washers will be flush with the hinge angle. Damage threads beyond the nut face. Use bolt stock for pin.
9. Galvanize all ferrous parts after fabrication.
10. Cover all moveble contact surfaces with a coat of waterproof grease prior to installation.
11. For barriers 36 inches and less in width, use one hinge the full width of barrier.
12. If the barrier width exceeds 12 feet, provide an additional hinge on the centerline of the barrier.
13. For barriers exceeding 6 feet in height or width, use brace angles evenly spaced at a maximum of 6 feet on center.
14. Shear pin material shall be commercially pure aluminum wire, alloy 1100, temper O, Federal Specification QQ-A-411.
15. ⊙ Refer to part J of the specifications for additional requirements and material specifications. △

Barrier No.	Frame Angles	Brace Angles	Shear Pins	Inlet Hinge Angles		Outlet Hinge Angles	Hinge	
				Upper	Lower		Std. Pipe	Pin
1	2"x2"x1/4"	2"x2"x1/4"	1/8" ϕ	2"x2"x1/4"	2"x2"x1/4"	2"x2"x1/4"	⊡ 3/4" ϕ	1/2" ϕ
2	3"x3"x7/16"	2"x2"x1/4"	1/8" ϕ	2 1/2"x2 1/2"x1/4"	2 1/2"x2 1/2"x1/4"	2 1/2"x2 1/2"x1/4"	⊡ 1" ϕ	3/4" ϕ
3	4"x4"x5/8"	2"x2"x3/8"	3/16" ϕ	3"x3"x3/8"	3"x3"x3/8"	3"x3"x3/8"	⊡ 1 1/4" ϕ	1" ϕ
4	5"x5"x7/8"	2 1/2"x2 1/2"x1/2"	1/4" ϕ	△ 5"x5"x1/2"	5"x3"x7/16"	3"x3"x1/2"	⊡ 1 1/2" ϕ	1 1/4" ϕ

REVISIONS		
MARK	DATE	DESCRIPTION
△	9-11-67	Changed angle size
⊡	3-15-68	Changed sizes of hinge Standard Pipe.
⊙	1-22-69	Revised (NOTES)
△	2-11-75	Revised Note 15

DRAWN BY P.M.M.
CHECKED BY K.O.
DESIGNED BY C.W.H.-K.O.
SUBMITTED BY C.W.H.

SUPERSEDES DRAWING
2-D 261 DATED SEPT., 1959

LOS ANGELES COUNTY
FLOOD CONTROL DISTRICT

PROTECTION BARRIER

PROTECTION BARRIER DETAILS
AND GENERAL NOTES

RECOMMENDED BY C. E. Chelly, DIVISION ENGINEER (HYDRAULIC)
APPROVED RECOMMENDED BY W. W. Rankin, ASS'T CHIEF DEPUTY ENGINEER
APPROVED BY Walter J. Wood, CHIEF ENGINEER

SCALE	DATE	DWG. NO. 2-D261.3
NONE	JAN. 10, 67	SHEET 3 OF 3

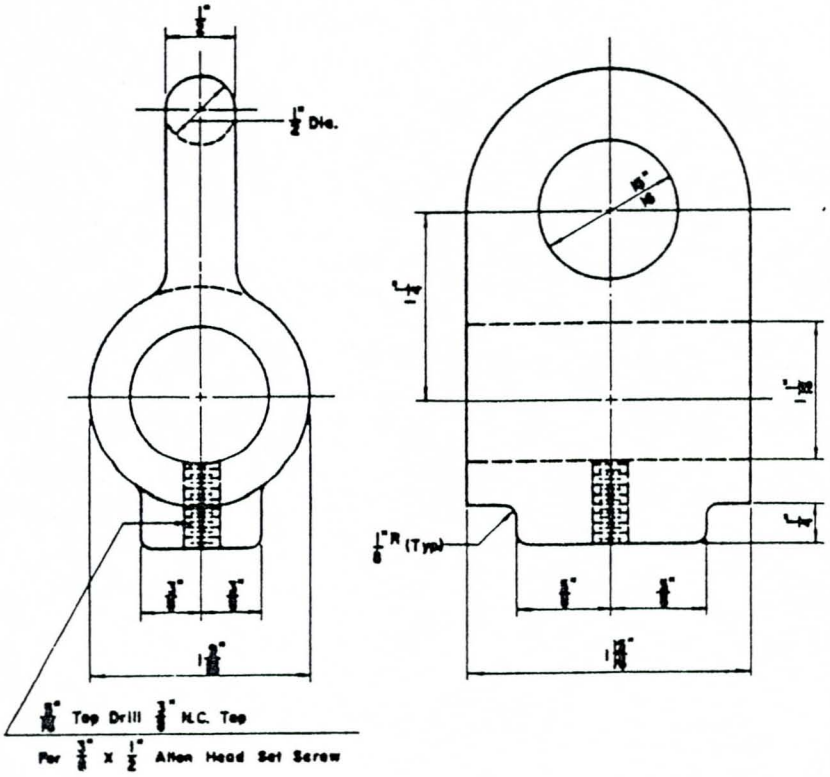

NOTE:

1. Material shall be Cast Steel.
2. Stirrups shall be galvanized.
3. For installation details see Standard Dwg. 2-D232.

SUPERSEDES DRAWING OF THE SAME NUMBER DATED MAR. '60

LOS ANGELES COUNTY
FLOOD CONTROL DISTRICT

ADJUSTABLE
PROTECTION BAR
STIRRUP

RECOMMENDED BY: E. Magnuson, DIVISION ENGINEER (DESIGN)

APPROVAL RECOMMENDED BY: Milan W. Ramaroge, ASS'T CHIEF DEPUTY ENGINEER 9-19-69

APPROVED BY: Walter J. Wood, CHIEF ENGINEER

SCALE	DATE	DWG. NO. 2-D264
NONE	9-24-69	SHEET 1 OF 1

DRAWN BY	REVISIONS		
G.D.M.	MARK	DATE	DESCRIPTION
CHECKED BY V.C.M.			
DESIGNED BY R.J.S.			
SUBMITTED BY C.W.H.			

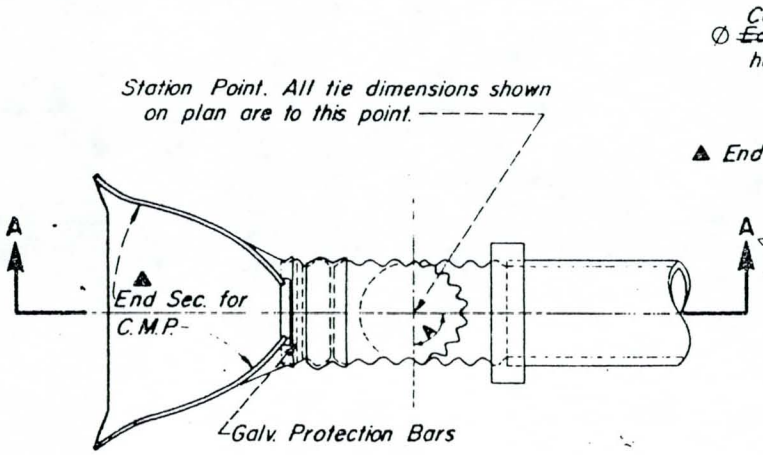

PLAN
NO SCALE

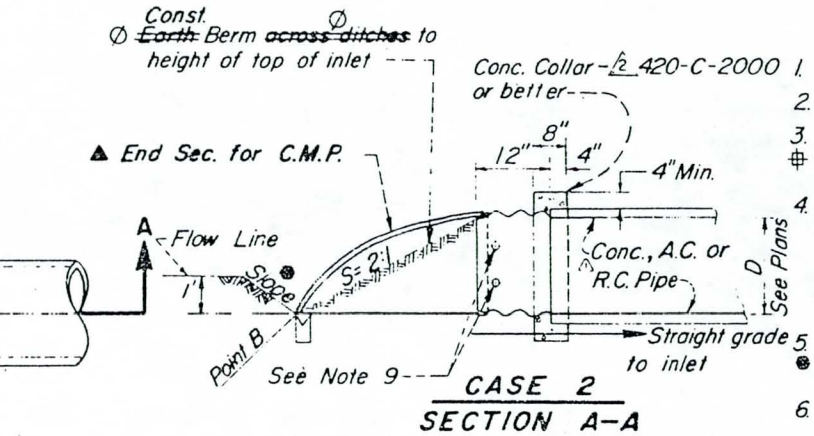

CASE 2
SECTION A-A

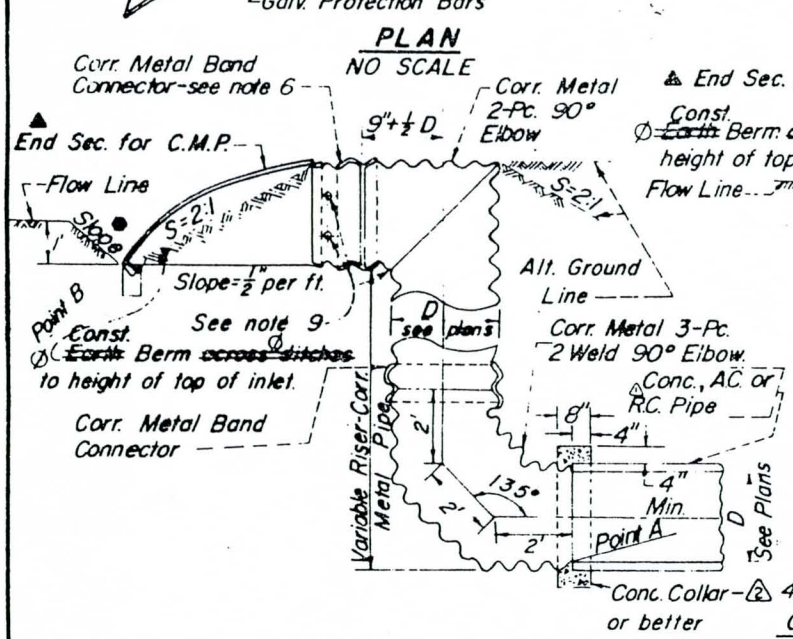

CASE 1
SECTION A-A

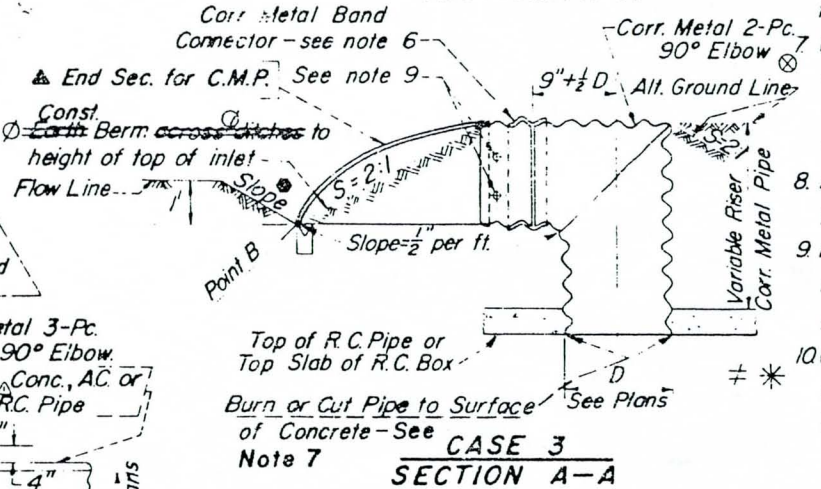

CASE 3
SECTION A-A

GENERAL NOTES

1. Angle "A" may be any angle as required.
2. Elevation of Point A shown on Plans.
3. Point B shall be placed 1-foot below the flow line ‡ of existing ditch unless otherwise specified on plans. Slope to be set in field by the Engineer.
4. The height of the riser for Case 1 & 3 shall vary as determined by the elev. of Points A & B, or by the top of Storm Drain Conduit and elevation of Point B.
5. ● Case 2 or 3 shall be used unless prior approval of Case 1 is obtained from Design Divison Engineer
6. Corrugated metal band connector not required for inlet sizes 24 inch diameter or less.
7. In all Cases, connection to the storm drain conduit shall be in accordance with the applicable junction structure, transition structure, or manhole
8. All corrugated metal pipe and fittings shall be galvanized.
9. Punch holes in corrugated metal pipe and weld ¾ inch galvanized bars at 6 inch c.c. in place across opening.
10. ‡ ✳ Coat welded, cut and abraded surfaces as specified in subsection 206-7 of the Standard Specifications.
11. ∅ Inlet No. 1 shall not be used in water-courses subject to debris flows. Structure having Protection Barrier (2-D261) to be used.

GENERAL NOTES (CONT'D)

12. ▲ End section may be Armco Standard End Section, Bethlehem Steel Co. Flared End Section for C.M.P., or District-approved equal.

REVISIONS		
‡	2-23-69	Revised Note 10
△	12-17-69	Added A.C. Pipe
△2	4-1-72	Revised concrete designation

REVISIONS		
MARK	DATE	DESCRIPTION
✳	2-28-61	Revised Note 10
☾	9-14-61	Revised Notes
●	4-10-62	Revised
‡	5-10-62	Revised
∅	12-18-64	Revised
▲	12-12-66	Revised, Added Note 12

DRAWN BY H. L. H. | DESIGNED BY R. W. R.
TRACED BY H. L. H. | SUBMITTED BY R. B. R.
CHECKED BY R. W. R.
RECOMMENDED BY E. M. Gartland, DIVISION ENGINEER (DESIGN)
APPROVED BY W. S. Lewis, CHIEF ENGINEER

LOS ANGELES COUNTY FLOOD CONTROL DISTRICT

INLET NO. 1
PLAN & SECTION

SCALE NONE | DATE MAY '60 | NO. 2-D265 | SHEET 1 OF 1

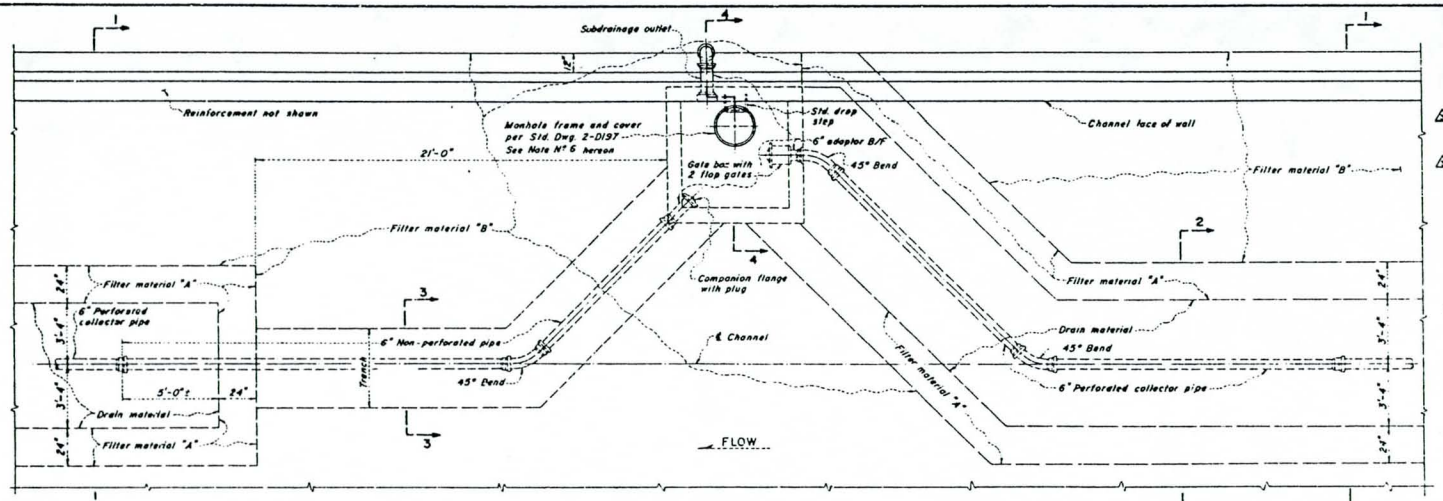

SUBDRAINAGE PLAN – CASE I

SINGLE DRAIN ON CENTERLINE AND MANHOLE ONE SIDE

SCALE: 3/8" = 1'-0"

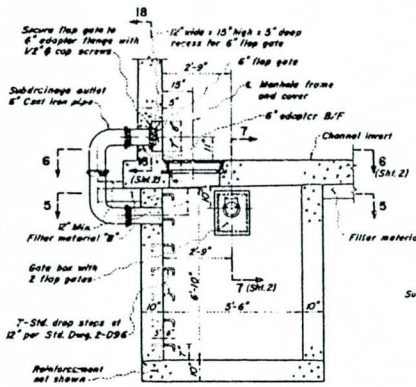

SECTION 4-4

SCALE: 1/2" = 1'-0"

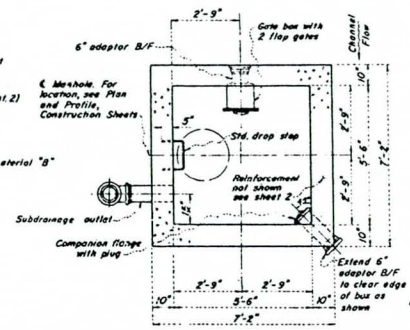

SECTION 5-5

SCALE: 1/2" = 1'-0"

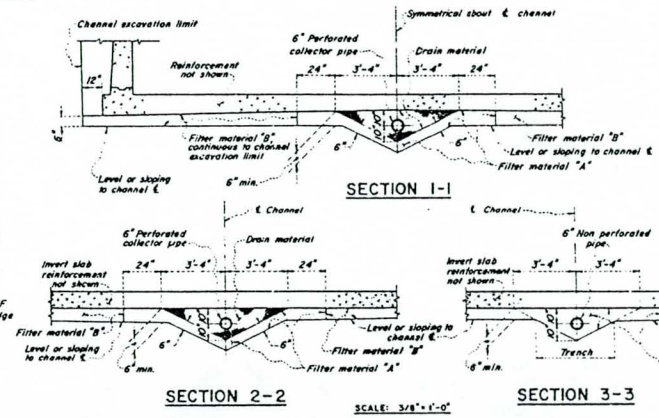

GENERAL NOTES

CASES

1. Case I, II or III shall be used as indicated on the construction drawings.

FILTER AND DRAIN MATERIAL, SUBDRAIN PIPE

⊙ 2. Drain Material, Filter Material "A" and Filter Material "B", and Subdrain △3 Pipe shall be per Part L of the Specifications.

SUBDRAIN MANHOLES AND APPURTENANCES

3. AUTOMATIC FLAP GATES

△3 The flap gates shall be flat back, adjustable, inclined face, automatic flap gates, designed for seating head of not less than 20 feet. See ⊙ Part I of the Specifications.

4. SUBDRAINAGE MANHOLE APPURTENANCES AND FITTINGS WHEN TYPE I FLAP GATES USED

Except for the bell and flanged adaptors and companion flanges, the bell and spigot outlet pipes and fittings shall be cast iron, AWWA C 100, Class D, or AWWA C 110.

The bell and flanged adaptors, companion flanges, and gate boxes shall be cast from gray iron, ASTM A 48, Class 30.

△5. SUBDRAINAGE MANHOLE APPURTENANCES AND FITTINGS WHEN TYPE II FLAP GATES USED

Except for the bell and flanged adaptors and companion flanges, the bell and spigot outlet pipes and fittings shall be cast iron, AWWA C 100, Class D, or AWWA C 110.

The bell and flanged adaptors and companion flanges and gate boxes shall be cast from Class 30, epoxy coated (See note 7), Gray iron, ASTM A 48.

△6. SUBDRAINAGE MANHOLE APPURTENANCES AND FITTINGS – MISC.

The flanged end of the adaptors shall be drilled and tapped to receive four 1/2-inch cap screws; said holes shall be located to match the holes provided in the flap gates.

The companion flanges shall be drilled with 9/16-inch holes to match the drilled and tapped holes in the flanged end of the adaptors.

The contractor shall submit detailed shop drawings of the gate boxes for approval by the District prior to casting.

A District approved type of waterproof, neoprene gasket shall be placed between the adaptors and the flap gates, gate boxes or companion flanges, as the case may be.

All bolts, nuts and other fasteners to be used with the adaptors, companion flanges and gate boxes shall be fabricated from Type 316 stainless steel, or equivalent.

The companion flange plug shall be made from Type 316 stainless steel, or equivalent.

The pressure manhole frame and cover shall be in accordance with Standard Drawing 2-D197 except that the manhole frame shall be embedded in the invert slab eliminating the need for the 5/8-inch by 8-inch anchor bolts. The screw studs required to hold the steel pressure plates shall be steel.

△7 Epoxy coating shall be by the fusion process using 100 percent powder epoxy resins, or by a district approved equal epoxy system.

△8 A precast subdrainage manhole may be used subject to the written approval of the Engineer

SUPERSEDES DRAWING OF THE SAME NUMBER DATED JAN. 1963

REVISIONS			
MARK	DATE	DESCRIPTION	
⊙	1-22-68	Revised (NOTES)	
△3	3-19-71	Revised Notes 5 & 6 Added Note 7	
△6	6-9-71	Added Note 8.	
△3	2-21-74	Revised Notes 2 & 3	

DRAWN BY H.S. · TRACED BY S.E. · CHECKED BY H.S. · SUBMITTED BY H.S.B. · RECOMMENDED BY C.F. Schilling, DIVISION ENGINEER

LOS ANGELES COUNTY FLOOD CONTROL DISTRICT

SUBDRAINAGE SYSTEM FOR R.C. RECTANGULAR OPEN CHANNEL CASE I

APPROVED BY Walter E. Black, CHIEF ENGINEER

SCALE: AS SHOWN · DATE: SEPT. 1966 · SHEET 1 OF 3 · NO. 2-D295.1

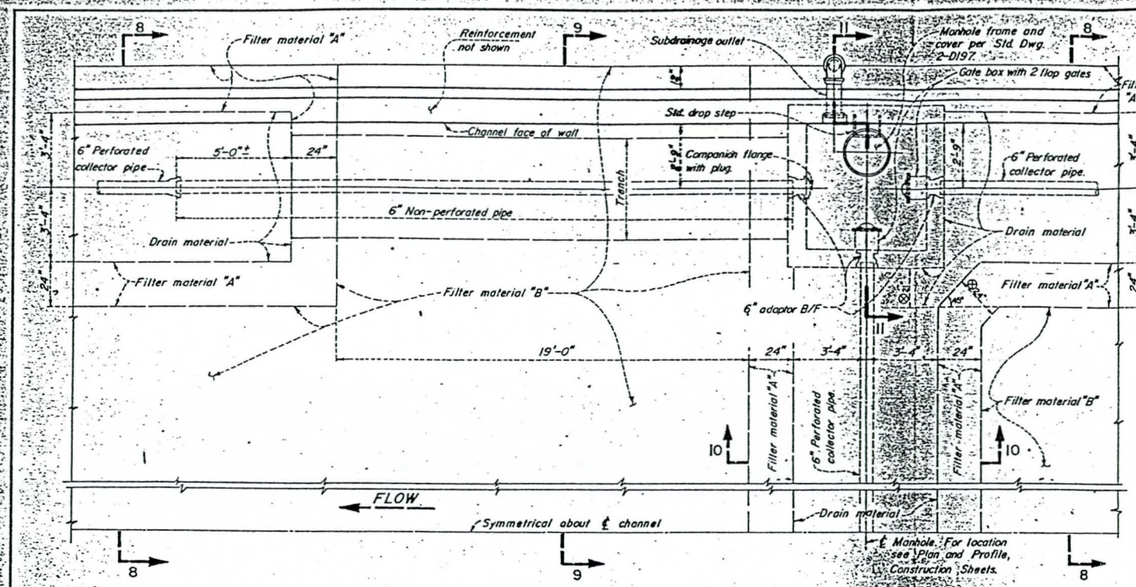

SUBDRAINAGE PLAN—CASE II

DOUBLE DRAIN (ONE EACH SIDE) AND MANHOLE EACH SIDE

SCALE: 3/8"=1'-0"

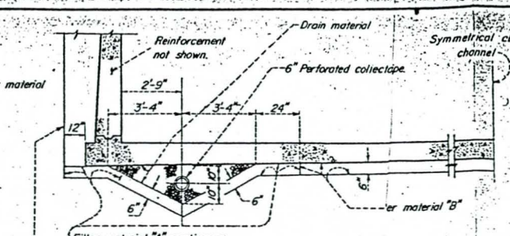

SECTION 8-8

SCALE: 3/8"=1'-0"

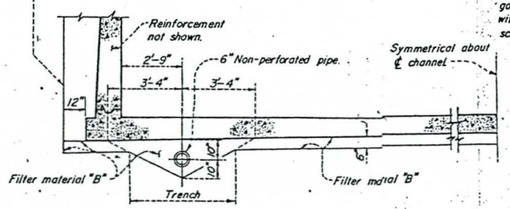

SECTION 9-9

SCALE: 3/8"=1'-0"

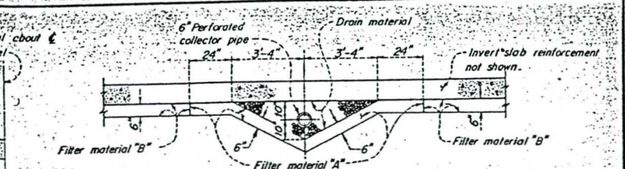

SECTION 10-10

SCALE: 3/8"=1'-0"

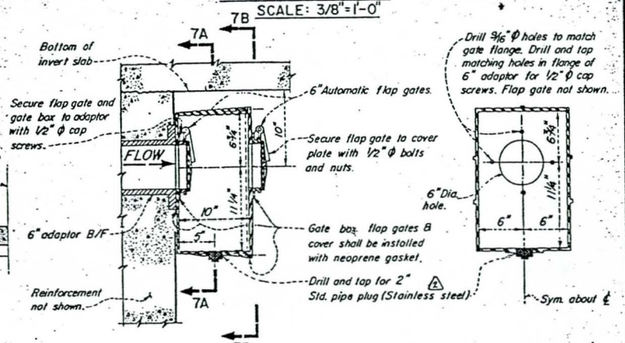

SECTION 7-7 (Sh. 1, 2, 3)

SCALE: 1-1/2"=1'-0"

SECTION 7A-7A

NOTE:
See General Notes Sheet 1 for material specifications.

NOTE:
⚠ Add #8 bars as shown, top and bottom faces. Bend up bottom bars into wall. Cut top bars 2" clear of edge of concrete. Typical channel wall and base slab reinforcement not shown. Cut typical wall base slab reinforcement 2" clear of manhole frame. Reinforcement shown is typical for manholes.

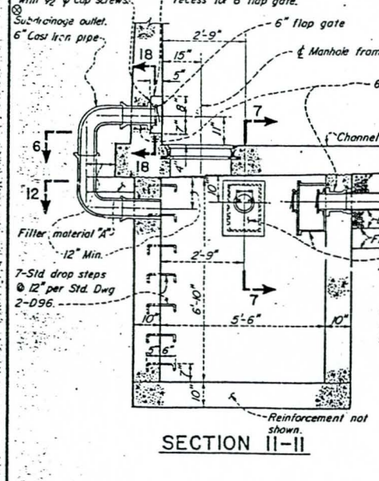

SECTION 11-11

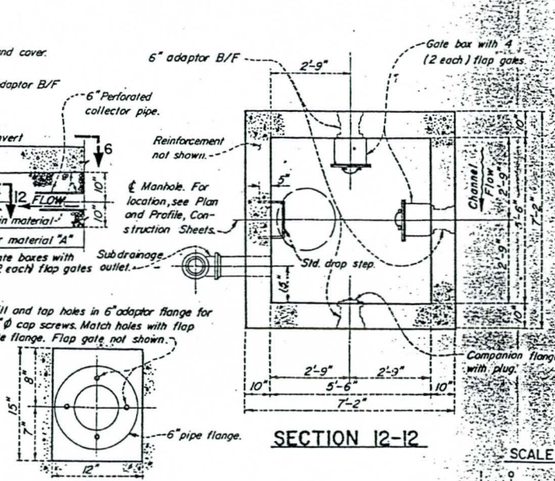

SECTION 12-12

SECTION 18-18

SCALE: 1-1/2"=1'-0"

SCALE: 1/2"=1'-0"

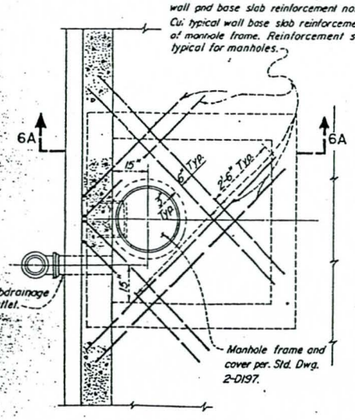

SECTION 6-6 (Sh. 1, 2, 3)

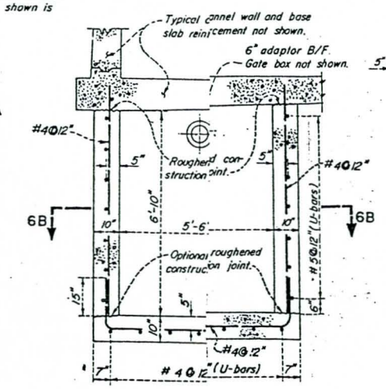

SECTION 6A-6A

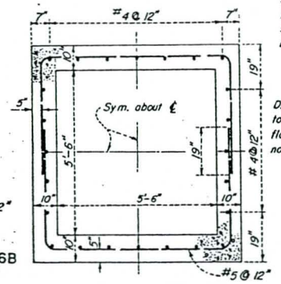

SECTION 6B-6B

SCALE: 1/2"=1'-0"

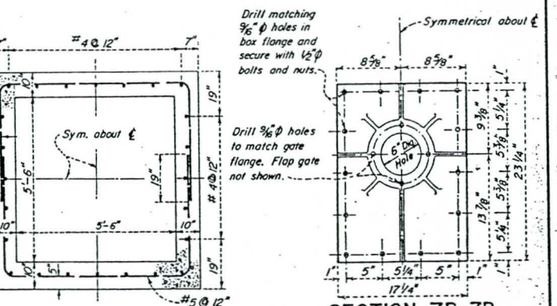

SECTION 7B-7B

SCALE: 1-1/2"=1'-0"

NOTE:
FOR GENERAL NOTES SEE SHEET 1.

REVISIONS			
MARK	DATE	DESCRIPTION	
⊙	1-18-63	Changed Date	
⊕	6-25-63	General Revisions	
	9-13-66	General Minor Revisions	
△	4-15-67	Revise bars	
△	3-19-71	Revised Material	

LOS ANGELES COUNTY FLOOD CONTROL DISTRICT

SUBDRAINAGE SYSTEM FOR R.C. RECTANGULAR OPEN CHANNEL CASE II

DRAWN BY N.B.	DESIGNED BY	APPROVED BY	
TRACED BY H.L.K.		CHIEF ENGINEER	
CHECKED BY E.W.R.	SUBMITTED BY D.H.H.	SCALE AS SHOWN	© DATE JAN. 1963
RECOMMENDED BY			NO. 2-D295.2 SHEET 2 OF 3

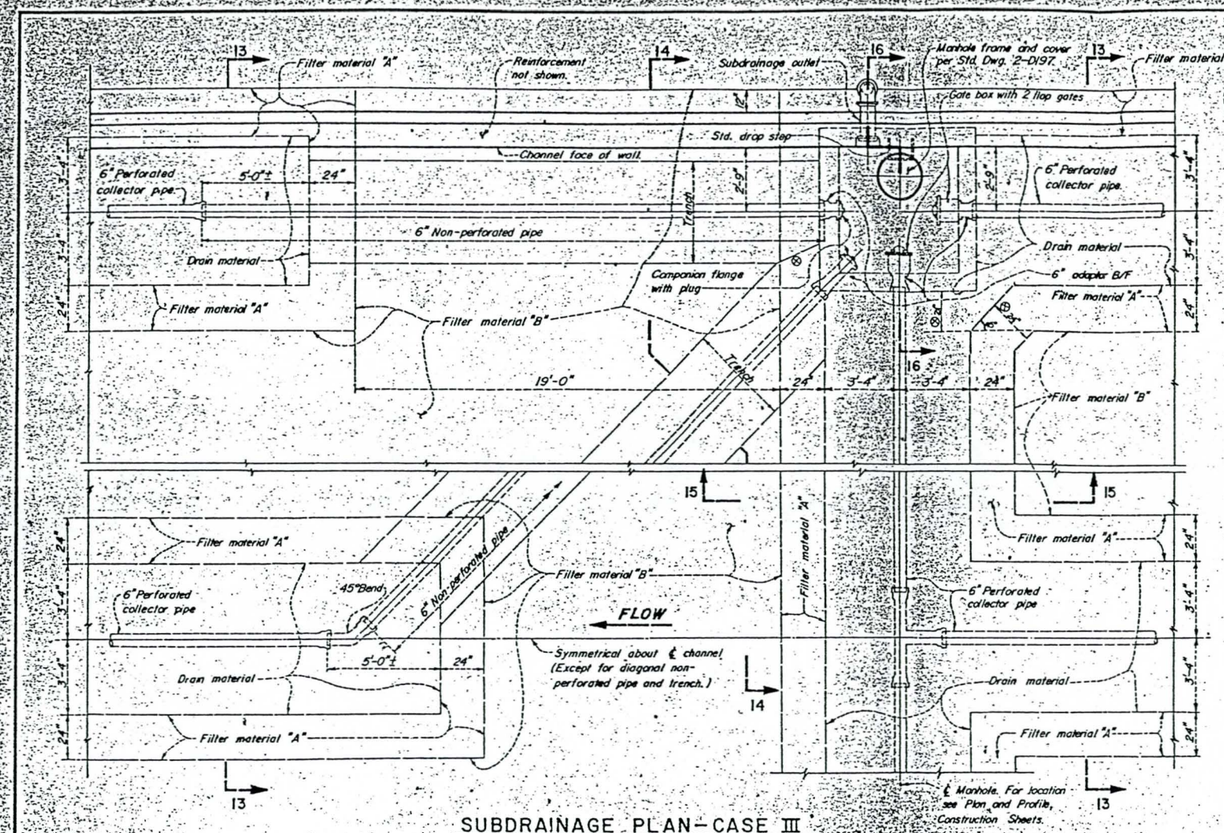

SUBDRAINAGE PLAN-CASE III

TRIPLE DRAIN (ONE EACH SIDE AND ON CENTERLINE) AND MANHOLE EACH SIDE

SCALE: 3/8"=1'-0"

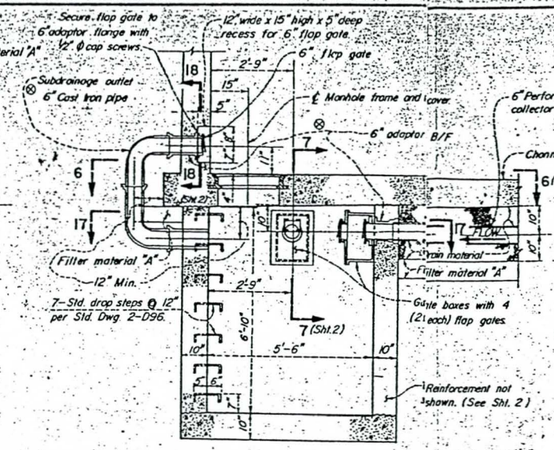

SECTION 16-16

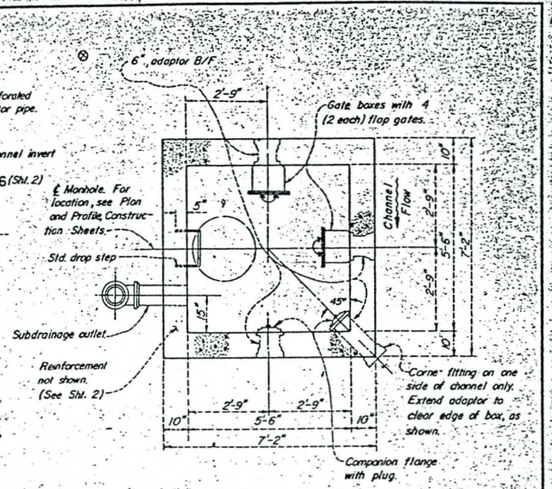

SECTION 17-17

SCALE: 1/2"=1'-0"

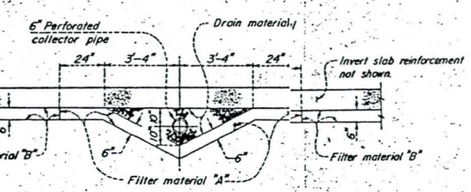

SECTION 15-15

SCALE: 3/8"=1'-0"

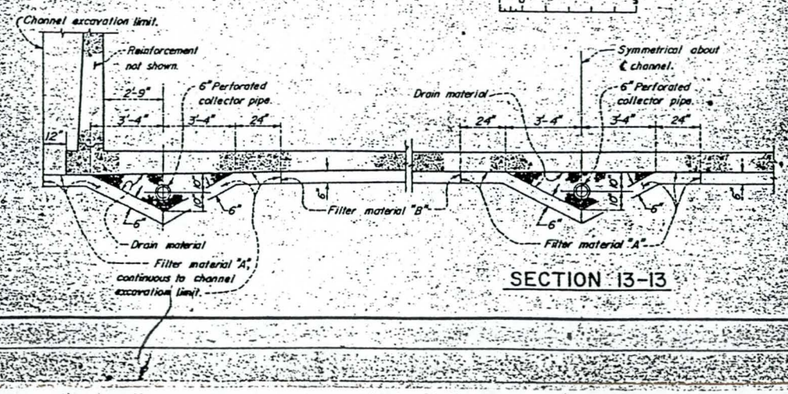

SECTION 13-13

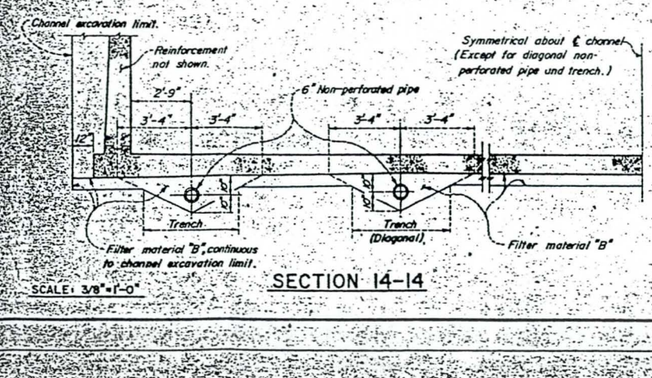

SCALE: 3/8"=1'-0"

SECTION 14-14

NOTE:
- FOR GENERAL NOTES SEE SHEET 1.

REVISIONS		
MARK	DATE	DESCRIPTION
⊙	1-18-63	Changed Date
⊗	6-25-63	General Revisions
	3-14-66	General Minor Revisions

LOS ANGELES COUNTY FLOOD CONTROL DISTRICT

SUBDRAINAGE SYSTEM FOR R.C. RECTANGULAR OPEN CHANNEL CASE III

DRAWN BY N.B. | DESIGNED BY | APPROVED BY W. S. Malmy, CHIEF ENGINEER

TRACED BY H.L.H. | CHECKED BY R.W.R. | DESIGNATED BY D.N.M.

RECOMMENDED BY R. H. Wade Jr.

SCALE: AS SHOWN | DATE: JAN. 1963 | NO. 2-D295.3 | SHEET 3 OF 3

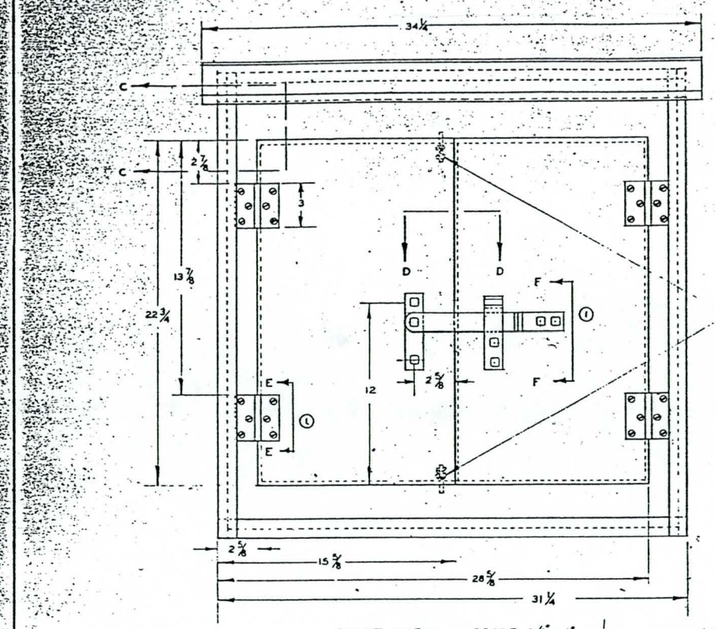

FRONT VIEW SCALE 1/4" = 1"

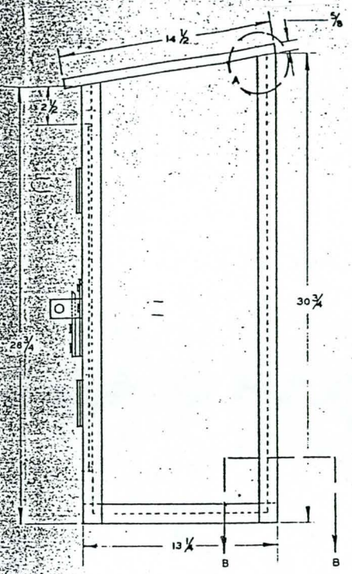

SIDE VIEW
SCALE 1/4" = 1"

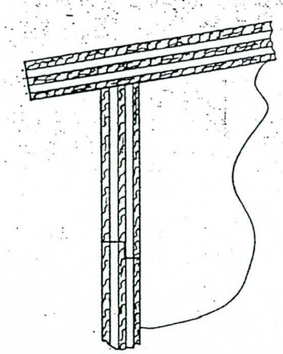

SECTION C-C
SCALE 1" = 1"

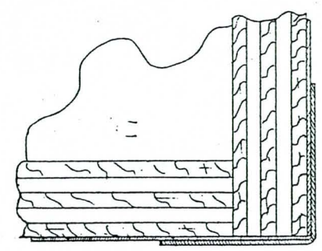

SECTION B-B
SCALE 1" = 2"

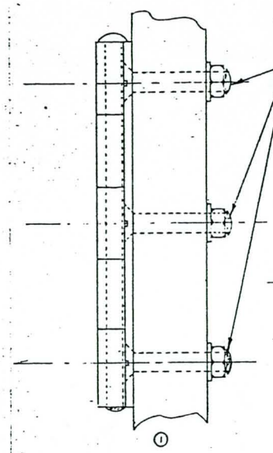

SECTION E-E
SCALE 1" = 2"

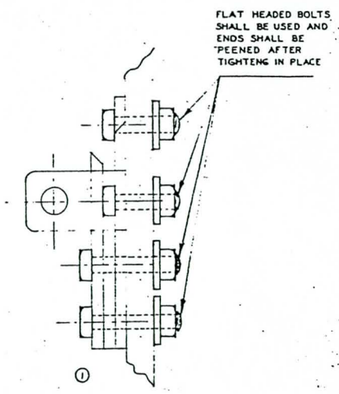

SECTION F-F
SCALE 3/4" = 1"

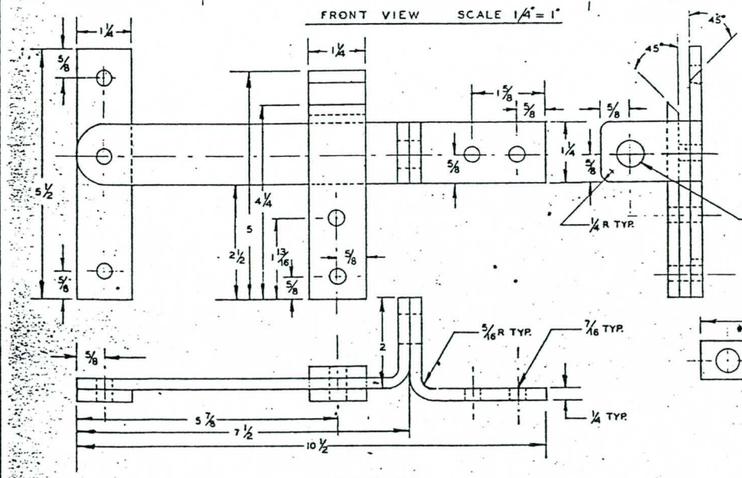

HASP DETAIL
SCALE 3/4" = 1"

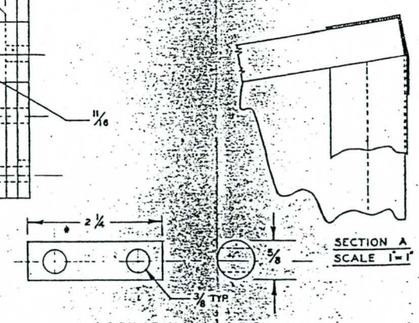

SECTION A
SCALE 1" = 1"

LOCK PIN
SCALE 1" = 1"

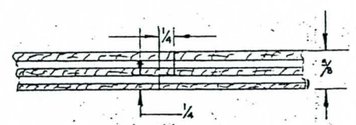

SECTION D-D
SCALE 1" = 1"

NOTES

1. UTILITY BOX SHALL BE CONSTRUCTED OF 5/8 INCH FIVE PLY PLASTIC WATER RESISTANT PLYWOOD.
2. ALL JOINTS SHALL BE GLUED WITH A WATER RESISTANT GLUE AND THEN SECURE WITH #6 BRASS SCREWS.
3. ALL EXTERNAL CORNERS AND EDGES SHALL BE FITTED WITH A PREBENT 20 GAGE 2 1/2 INCH WIDE SHEET METAL STRIP, ATTACHED WITH 20 GAGE 1/2 INCH LONG BRASS ESCUTCHEON PINS ON BOTH EDGES EVERY 2 INCHES OR EQUAL.
4. REMOVE ALL BURRS AND SHARP EDGES ON FINISHED WORK.
5. DIMENSIONS IN INCHES UNLESS OTHERWISE NOTED.
6. HASP SHALL BE CONSTRUCTED OF 1 1/4" x 1/4" FLAT MILD STEEL STRIP.
7. HASP SHALL BE CUT, DRILLED, AND BENT. ALL PARTS GALVANIZED.
8. ATTACHING HARDWARE FOR HASP SHALL BE 3/8 INCH 2 INCHES LONG FLAT HEADED BOLTS. THREADS SHALL BE BATTERED OR LOCK NUTS USED ON ALL BOLTS.
9. BARREL BOLTS, BRASS CONSTRUCTION, SHALL BE USED AS SHOWN, BOLTS SHALL BE 2 1/2 INCHES LONG. CAT #1078J CALIF. HARDWARE OR EQUAL.
10. LOOSE PIN, BUTTS HINGES, WROUGHT STEEL, PLAIN BEARING, DULL BRASS FINISH 3" X 3" CAT. # FBT241F CALIF. HARDWARE OR EQUAL.
11. ATTACHING HARDWARE SHALL BE OF BRASS OR OF EQUALLY NON-CORROSIVE CONSTRUCTION.
12. FINISH SHALL BE A MINIMUM OF TWO COATS OF GRAY COLOR EXTERIOR HOUSE PAINT. L.A.C.F.C.D. STOCK ITEM #14205 OR EQUAL.

(1) 13 ALL EXPOSED EDGES OF PLYWOOD SHALL BE SEALED

SUPERSEDES DWG #2-D258

REVISIONS			
MARK	DATE	DESCRIPTION	
(1)	2-5-65	ADDED VIEWS	

LOS ANGELES COUNTY FLOOD CONTROL DISTRICT

STANDARD

ELECTRICAL UTILITY

EQUIPMENT BOX

DESIGNED — DRAWN F.B. — CHECKED RMH — SUBMITTED — DIVISION CHIEF — ASSISTANT CHIEF ENGINEER — APPROVED M. E. Salzburg CHIEF ENGINEER — 4/9/68

SCALE NOTED — DATE 6-18-62 — NO. 2-D297 — SHEET 1 OF 1

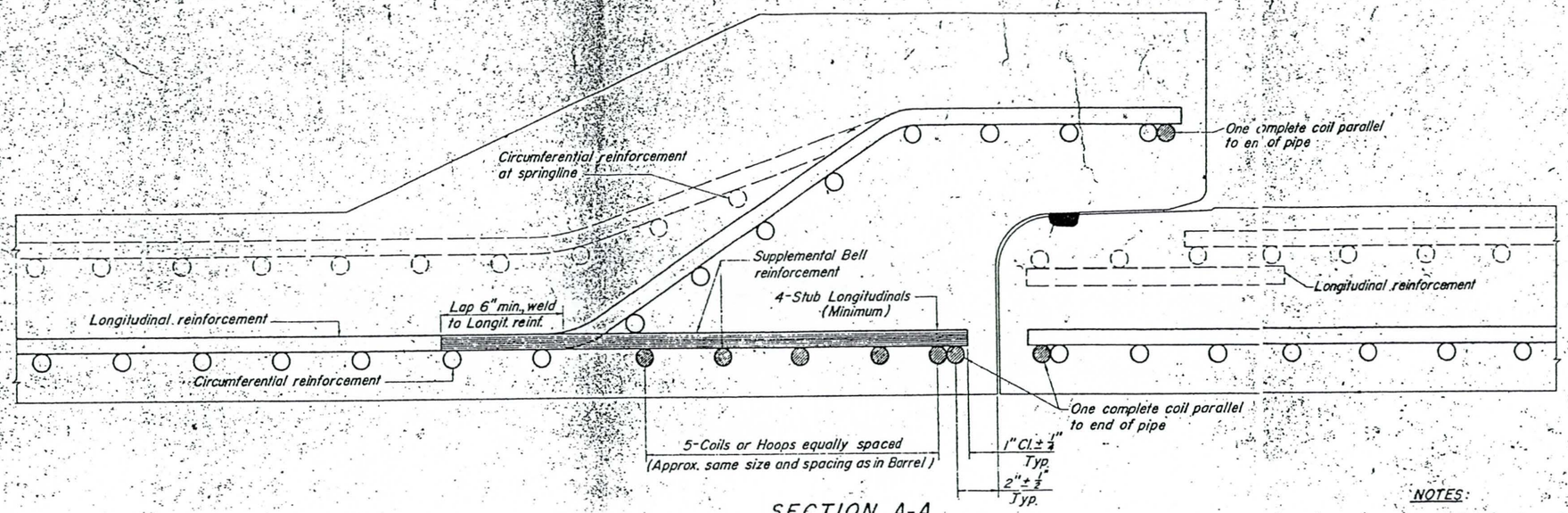

SECTION A-A
No Scale

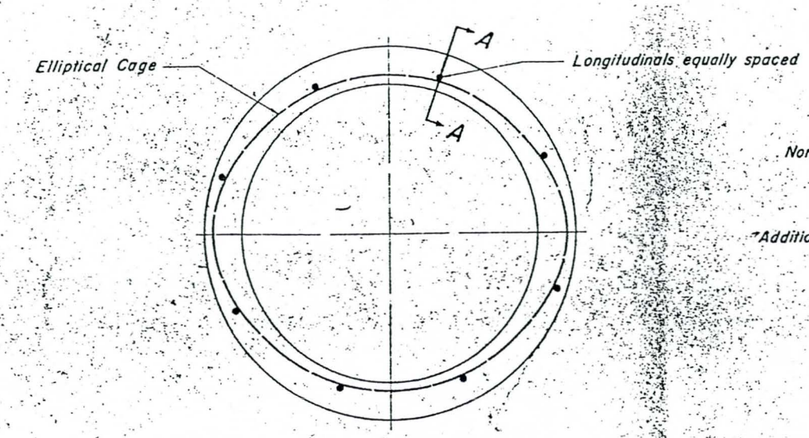

SECTION THROUGH BARREL
No Scale

LEGEND

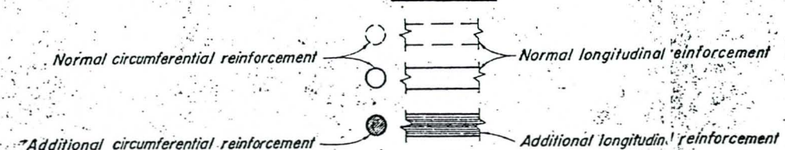

NOTES:

1. This detail applies where a single elliptical cage is used. Where one elliptical cage and one inner circular cage is used, the size and spacing of the additional circumferential steel reinforcement shall be that of the elliptical cage. Where two circular cages are used the additional steel reinforcement is not required.

△ 2. The additional steel shown hereon is not required, provided:

a. The normal circumferential reinforcement without change in diameter(s) is carried to within approximately two inches of the pipe end and one complete coil is placed parallel to the end of the pipe.

b. A minimum of three coils, including one complete coil parallel to the end of the pipe, is placed in the bell.

REVISIONS		
MARK	DATE	DESCRIPTION
△	8-21-63	Added Note

LOS ANGELES COUNTY FLOOD CONTROL DISTRICT

ADDITIONAL STEEL REINFORCEMENT FOR BELL END R.C. PIPE

APPROVAL RECOMMENDED BY
ASST. CHIEF DEPUTY ENGINEER
LOS ANGELES COUNTY FLOOD CONTROL DISTRICT

DRAWN BY G.R.F. | TRACED BY G.R.F. | DESIGNED BY D.Y.M. | DESIGNED BY R.E.S. | CHECKED BY C.W.K.

APPROVED BY
CHIEF ENGINEER

SCALE NONE | DATE MAR 1965 | NO. 2-D 895 | SHEET 1 OF 1

D	L	T
12"	1.0'	4"
18"	1.0'	5"
24"	1.0'	6"
36"	1.5'	8"
48"	1.5'	10"
57"	1.5'	10"
60"	1.75'	11"
66"	1.75'	11"

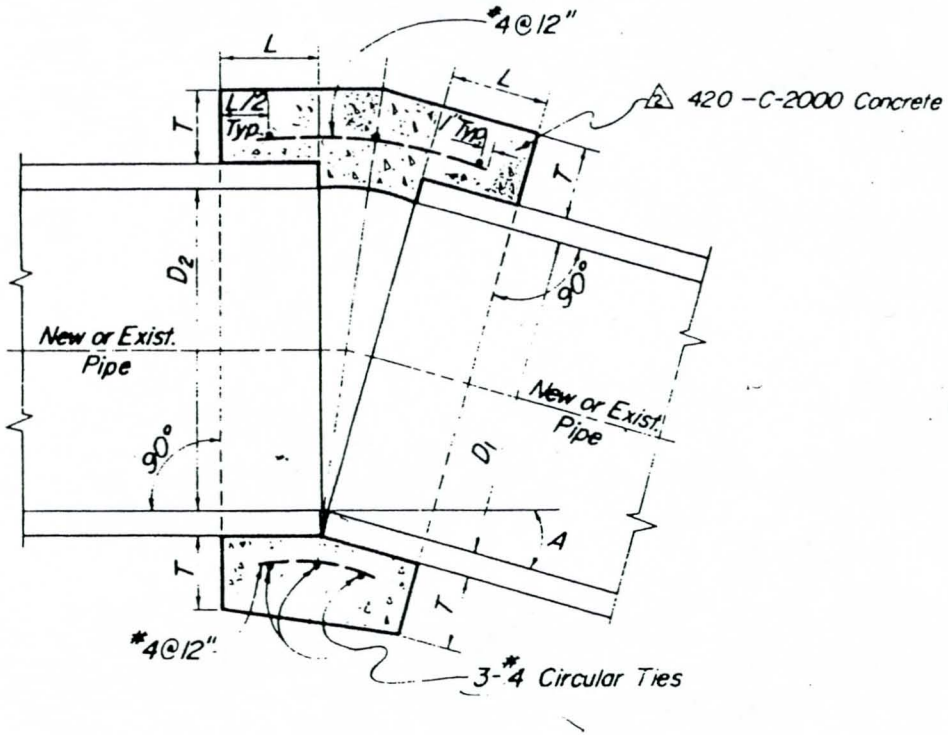

NOTES

1. A concrete collar is required where the change in grade exceeds 0.10 ft. per foot.
2. Where pipes of different diameters are joined with a concrete collar, L and T shall be those of the larger pipe $D=D_1$ or D_2, whichever is greater.
3. For pipe larger than 66" a special collar detail is required.
4. For pipe size not listed use next size larger.
5. Omit reinforcing on pipes 24" and less in diameter and on all pipes where angle A is less than 10°.
6. Where reinforcing is required the diameter of the circular ties shall be D + (2 x wall thickness) + 8".
7. When D_1 is equal to or less than D_2, join inverts and when D_1 is greater than D_2, join soffits.
8. Pipe may be corrugated metal pipe, concrete pipe, or reinforced concrete pipe, △ or asbestos cement pipe.
9. △2 Not to be used for a size change on the mainline.

REVISIONS		
MARK	DATE	DESCRIPTION
	7-8-69	Revised Note 8
△2	4-1-72	Revised Concrete Designation & added Note 9

LOS ANGELES COUNTY FLOOD CONTROL DISTRICT

CONCRETE COLLAR

FOR PIPES 2 INCHES THROUGH 66 INCHES

DRAWN BY G.R.E. DESIGNED BY D.Y.M.
TRACED BY G.R.E. SUBMITTED BY C.W.H.
CHECKED BY H.S.M.
RECOMMENDED BY
DIVISION ENGINEER

APPROVED BY
ENGINEER

SCALE NONE DATE DEC 1962 NO. 2-5393 SHEET OF

APPROVAL RECOMMENDED BY
ASST. CHIEF DEPUTY ENGINEER
LOS ANGELES COUNTY FLOOD CONTROL DISTRICT

omplete coil parallel
l of pipe

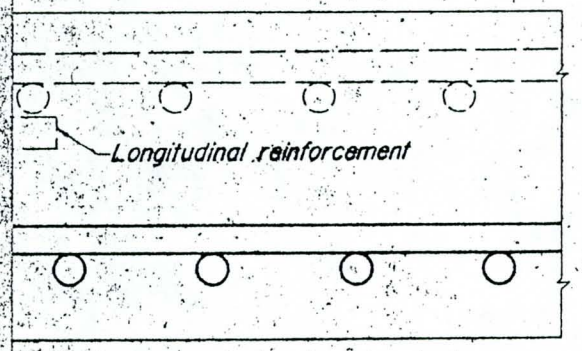

reinforcement

l reinforcement

NOTES:

1. This detail applies where a single elliptical cage is used. Where one elliptical cage and one inner circular cage is used, the size and spacing of the additional circumferential steel reinforcement shall be that of the elliptical cage. Where two circular cages are used the additional steel reinforcement is not required.

△ 2. The additional steel shown hereon is not required, provided:

a. The normal circumferential reinforcement without change in diameter(s) is carried to within approximately two inches of the pipe end and one complete coil is placed parallel to the end of the pipe.

b. A minimum of three coils, including one complete coil parallel to the end of the pipe, is placed in the bell.

REVISIONS		
MARK	DATE	DESCRIPTION
△	8-21-63	Added Note

LOS ANGELES COUNTY FLOOD CONTROL DISTRICT

ADDITIONAL STEEL REINFORCEMENT FOR BELL END R.C. PIPE

APPROVAL RECOMMENDED BY

ASST. CHIEF DEPUTY ENGINEER
OS ANGELES COUNTY FLOOD CONTROL DISTRICT

DRAWN BY G.R.E.
TRACED BY G.R.E.
CHECKED BY D.Y.M.
RECOMMENDED BY
DIVISION ENGINEER (DESIGN)
DESIGNED BY R.J.S.
SUBMITTED BY C.W.M.
APPROVED BY
CHIEF ENGINEER
SCALE NONE
DATE MAR. 1963
NO. 2-B395
SHEET 1 OF 1

SKETCH

DETAILS OF SHORING INDICATING SIZE AND SPACING OF ALL MEMBERS.

SEQUENCE OF PLACEMENT AND REMOVAL OF MEMBERS SHALL BE NOTED AS REQUIRED TO INSURE SAFETY OF WORKMEN.

CASE _____; SHORING FOR _____ EXCAVATION

APPLICABLE REACHES:

STA. _____ TO STA. _____

STA. _____ TO STA. _____

▲ NOTE:

REACHES GIVEN ARE APPROXIMATE. IF A TYPE OF SOIL IS ENCOUNTERED WITHIN THE ABOVE REACHES WHICH, IN ACCORDANCE WITH THE CRITERIA SET FORTH ON STANDARD DRAWING NO. 2-D 466, REQUIRES THE USE OF A DIFFERENT METHOD OF SHORING, THEN SHORING DETAILS WILL BE REVISED AS PROVIDED IN THE PROJECT SPECIFICATIONS.

DESIGN CRITERIA

1. DESIGN LOADS BASED ON L.A.C.F.C.D. "CRITERIA FOR THE DESIGN OF SHORING FOR EXCAVATIONS.
2. SOIL TYPE _____
   (K or γ = ____ p.c.f.)
   △ φ = ____°
3. ALL TIMBER SHALL BE _____ GRADE.
4. ALLOWABLE STRESSES:

STRESS	WOOD	STEEL
FLEXURAL		
AXIAL COMPRESSION		
SHEAR		
MODULUS, E.		

5. MAXIMUM EXCAVATION DEPTH _____ FEET.

CALCULATIONS

CALCULATIONS BY

NAME _____

R.C.E. NO. _____

ADDRESS _____

PHONE _____

DATE _____

SIGNATURE _____

▲LOS ANGELES COUNTY
FLOOD CONTROL DISTRICT

ACCEPTED BY _____

DATE _____

PROJECT NO. _____

EXCAVATION SHORING SYSTEM

(17½" TRIM LINE DIMENSION)

(4" TRIM LINE DIMENSION)

REVISIONS

MARK	DATE	DESCRIPTION
△	8-3-64	REVISED DESIGN CRITERIA
▲	10-10-73	REVISED TITLE BLOCK & NOTE

LOS ANGELES COUNTY
FLOOD CONTROL DISTRICT

SAMPLE SHEET

FOR USE AS A GUIDE
IN PREPARING CALCULATIONS
FOR SHORING OF EXCAVATIONS

SCALE	DATE	DWG. NO. 2-D 400
NONE	AUG. 1963	SHEET 1 OF 1

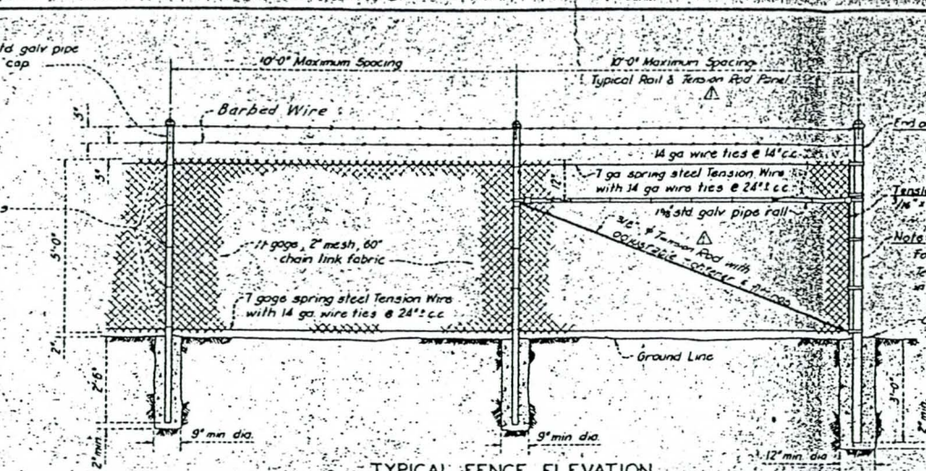

TYPICAL FENCE ELEVATION

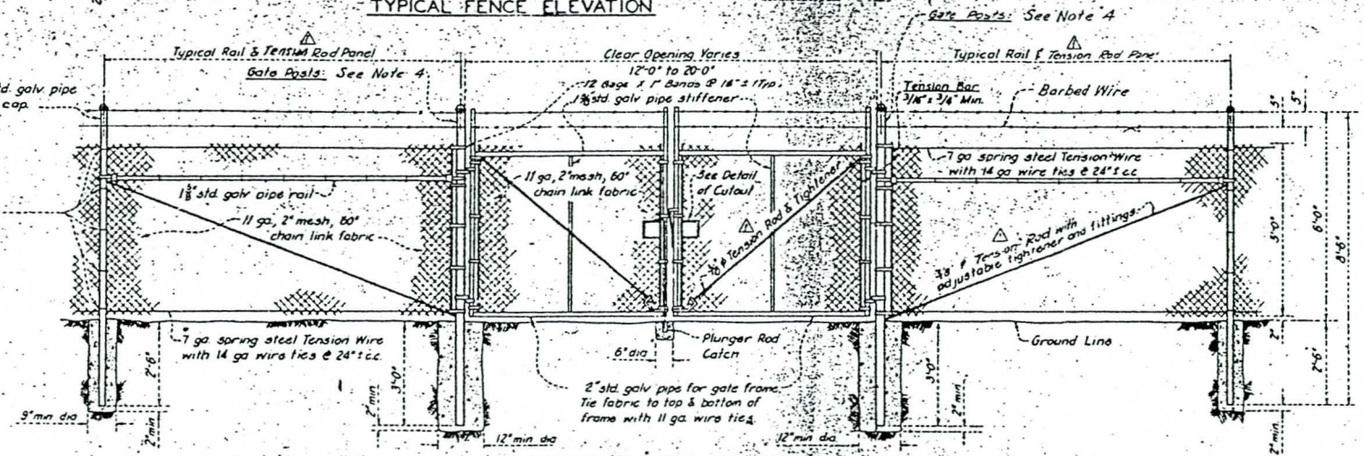

DOUBLE DRIVE GATE DETAIL

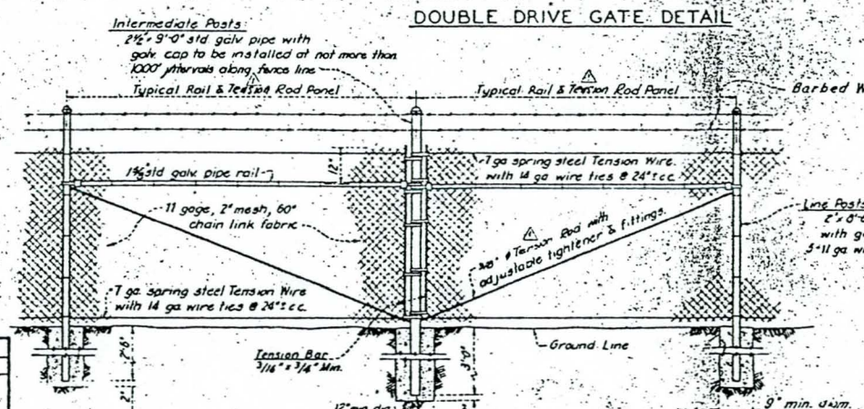

INTERMEDIATE POST DETAIL

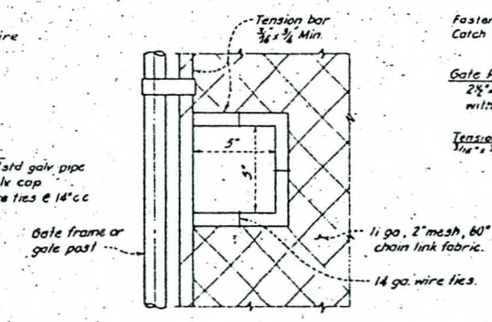

DETAIL OF CUTOUT FOR CHAIN AND LOCK

SCALE: NONE

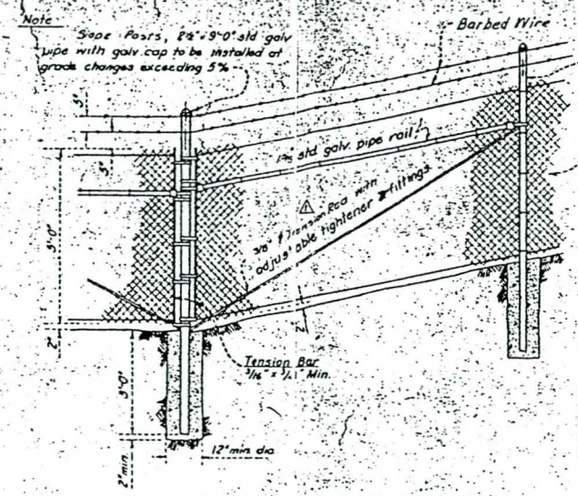

TYPICAL FENCE ON SLOPE

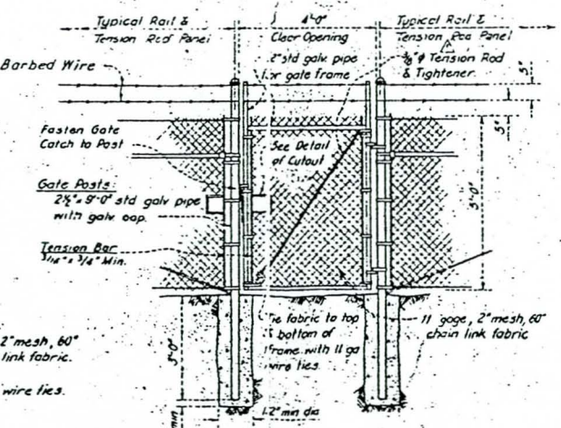

TYPICAL WALK GATE

Drawn by	REVISIONS		
B.T.B.	MARK	DATE	DESCRIPTION
Checked by F.W.R.	△	4-3-69	Changed "Trees" to "Foliage"
Reviewed by V.M.	△	6-4-71	Added Note 10 & changed pipe diameter
Submitted by C.W.H.	△	4-1-72	Revised Concrete Designation

Supersedes Dwg. No. 2-D403

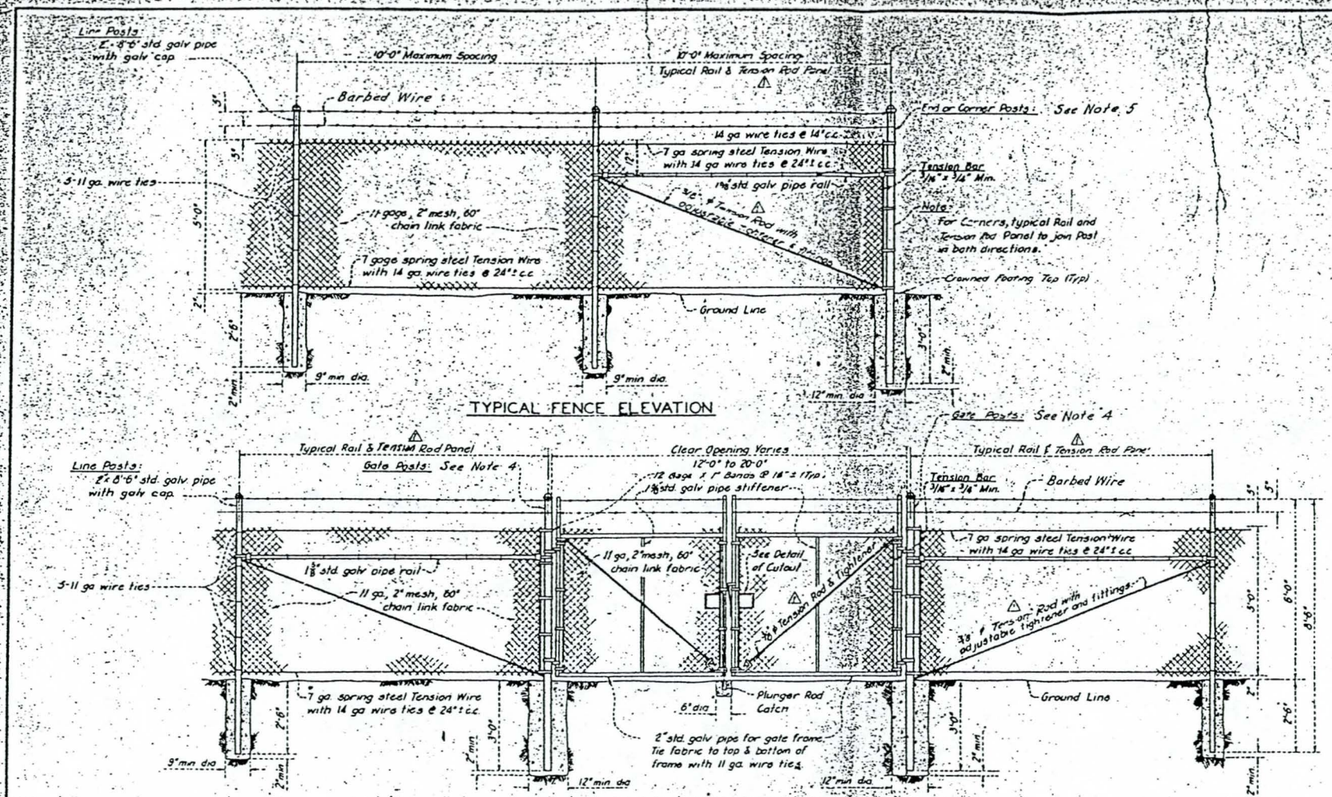

TYPICAL FENCE ELEVATION

DOUBLE DRIVE GATE DETAIL

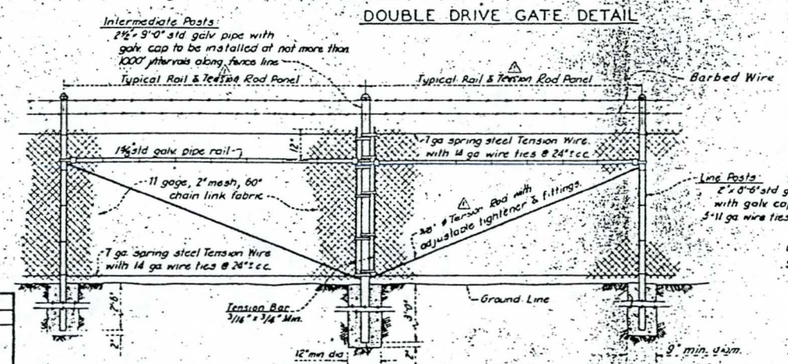

INTERMEDIATE POST DETAIL

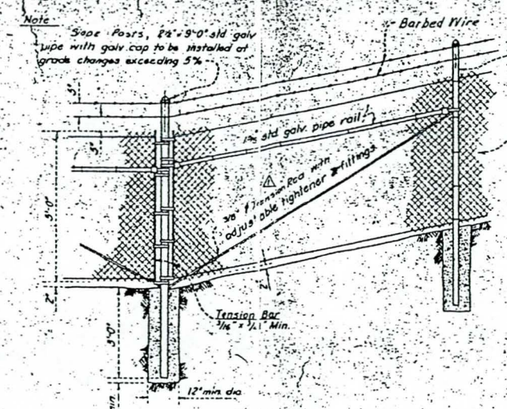

TYPICAL FENCE ON SLOPE

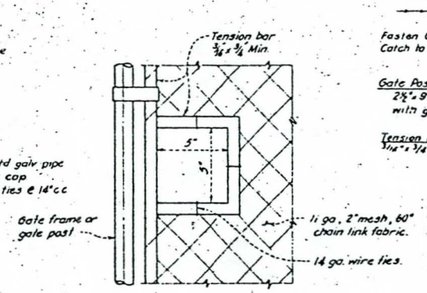

DETAIL OF CUTOUT FOR CHAIN AND LOCK

SCALE: NONE

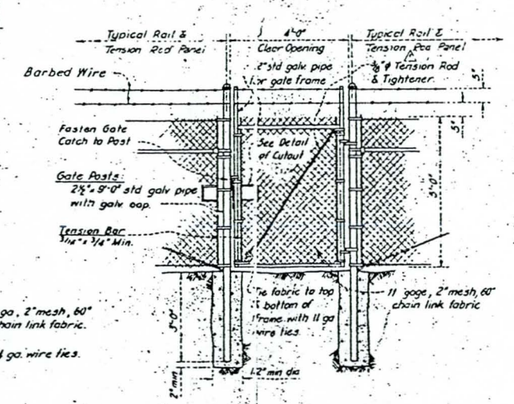

TYPICAL WALK GATE

GENERAL NOTES

1. All chain link fence materials & fittings shall conform to "Standard Specifications For Public Works Construction" sections 206-6 and 206-7 unless otherwise specified.
2. Adjustable tighteners shall be turnbuckle or equivalent, having 6-inch min. take up.
3. All gate hinges shall be heavy duty, malleable iron or steel, industrial service type 270 degree swing, of approved quality and design.
4. Gate posts shall be 3" X 9'-0" pipe for 12'-0" openings, and 4"X 9'-0" pipe for openings greater than 12'-0".
5. Corner or End posts shall be 3" X 9'-0" pipe. Changes in line where the angle of deflection is 30 degrees or more shall be considered a corner.
6. Secure galv. cap to post with 1/4 inch galv. round head rivet.
7. Concrete shall be Class 420-C-2000.
8. The fabric shall be placed on the outward facing side of the posts, stretched taut, and securely fastened.
9. Gates shall be provided with a combination spring latch and plunger rod of approved design.
10. Dimensions shown for Standard Galvanized Pipe and Posts are nominal outside diameters.

DRAWN BY B.T.B.	REVISIONS		
CHECKED BY F.W.R.	MARK	DATE	DESCRIPTION
DESIGNED BY V.M.	1	4-2-63	Changed "Trees" to "Tenuous"
SUBMITTED BY C.W.H.	2	6-4-71	Added Note 10 & changed pipe diameter
	3	4-1-72	Revised Concrete Designation

LOS ANGELES COUNTY FLOOD CONTROL DISTRICT

TYPICAL FENCE AND GATE DETAILS FOR SPREADING GROUNDS RIGHTS OF WAY

RECOMMENDED BY: C. F. Caballero, DIVISION ENGINEER (DESIGN)

APPROVED BY: Walter J. Wood, 1-8-69, CHIEF ENGINEER

RECOMMENDED BY: Paul Wilkinson, ASST. CHIEF DEPUTY ENGINEER

SCALE	DATE	DWG. NO.	SHEET	OF
1/2" = 1'-0"	JAN '69	2-D403	1	1

Supersedes Dwg. No. 2-D403 dated April, 1964

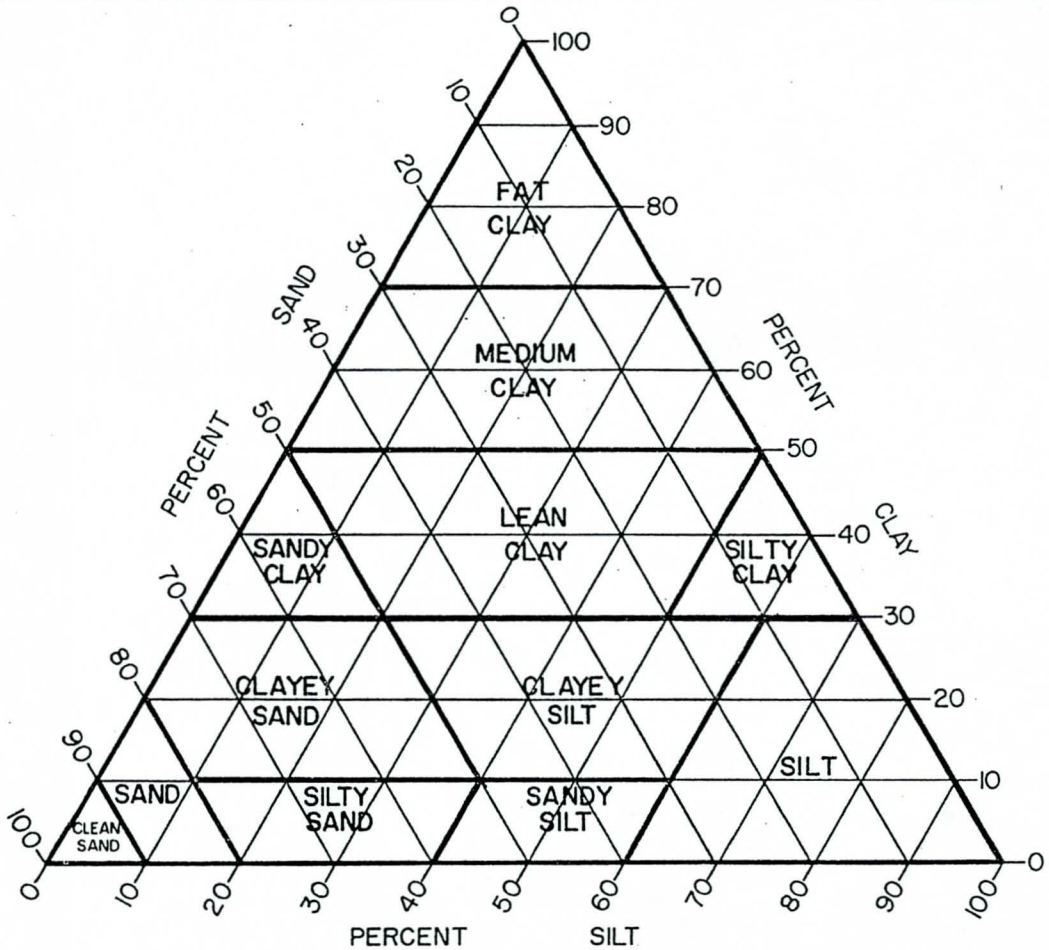

SOIL FRACTIONS	PARTICLE SIZE	
	LOWER LIMIT	UPPER LIMIT
	MM.	MM.
CLAY		.005
SILT	.005	.05
SAND (SEE NOTE 3)	.05	2.0
GRAVEL	2.0	3.0 INCHES

NOTES

Use of Chart

1. *Soils with percentages on a boundary line are classified directly below the line.*
2. *Soils with 11 percent or more gravel size particles are classified by the chart with the modifying adjective "gravelly" preceeding the classification (example: gravelly clayey sand); Soils with 51 percent or more gravel size particles are classified as "gravel" with the classification by the chart being the modifying adjective(s) (example: clayey sandy gravel).*
3. *Soils classified from the chart as "clean sand", "sand", "silty sand", "clayey sand", "sandy silt" or "sandy clay" with 50 percent or more of the sand size particles falling between the indicated sieve sizes, shall have the classification modified by the appropriate adjectives as follows:*

SIEVE No.	SIZE (MM)	DESCRIPTION
10	2.0	Very Coarse
16	1.19	Coarse
30	0.590	Medium
50	0.297	Fine
100	0.149	Very Fine
270	0.050	

(examples: clayey very fine sand; fine sandy clay; and gravelly coarse clean sand).

4. *Percentages are by dry weight. To enter triangular chart, use percentages based on material finer than 2.0 mm, so that sand + silt + clay = 100 percent.*

APPROVAL RECOMMENDED BY
G.W. Outland
ASST. CHIEF DEPUTY ENGINEER
LOS ANGELES COUNTY FLOOD CONTROL DISTRICT

REVISIONS		
MARK	DATE	DESCRIPTION

LOS ANGELES COUNTY FLOOD CONTROL DISTRICT

SOIL CLASSIFICATION CHART

DRAWN BY R.R.D. DESIGNED BY
LOGGED BY CHECKED BY C.E.L.
SUBMITTED BY 12/10/64
DIVISION ENGINEER FOUNDATION AND TESTING

APPROVED BY
CHIEF ENGINEER

SCALE NONE | DATE 12-10-64 | NO. 2-D412 | SHEET 1 OF 1

UNIFIED SOIL CLASSIFICATION (INCLUDING IDENTIFICATION AND DESCRIPTION)

Major Divisions (1)	Major Divisions (2)		Group Symbols (3)	Typical Names (4)	Field Identification Procedures (Excluding particles larger than 3 inches and basing fractions on estimated weights) (5)	Information Required for Describing Soils (6)	Laboratory Classification Criteria (7)		Group Symbols (8)
Coarse-grained Soils More than half of material is larger than No. 200 sieve size. The No. 200 sieve size is about the smallest particle visible to the naked eye.	Gravels More than half of coarse fraction is larger than No. 4 sieve size. (For visual classification, the ¼-in. size may be used as equivalent to the No. 4 sieve size)	Clean Gravels (Little or no fines)	GW	Well-graded gravels, gravel-sand mixtures, little or no fines.	Wide range in grain sizes and substantial amounts of all intermediate particle sizes.	For undisturbed soils add information on stratification, degree of compactness, cementation, moisture conditions and drainage characteristics.	Use grain size curve in identifying the fractions as given under field identification. Determine percentages of gravel and sand from grain-size curve. Depending on percentage of fines (fraction smaller than No. 200 sieve size) coarse-grained soils are classified as follows: Less than 5%: GW, GP, SW, SP. More than 12%: GM, GC, SM, SC. 5% to 12%: Borderline cases requiring use of dual symbols.	$C_u = \frac{D_{60}}{D_{10}}$ Greater than 4; $C_c = \frac{(D_{30})^2}{D_{10} \times D_{60}}$ Between one and 3	GW
			GP	Poorly-graded gravels, gravel-sand mixtures, little or no fines.	Predominately one size or a range of sizes with some intermediate sizes missing.			Not meeting all gradation requirements for GW	GP
		Gravels with Fines (Appreciable amount of fines)	GM	Silty gravels, gravel-sand-silt mixtures.	Nonplastic fines or fines with low plasticity. (for identification procedures see ML below)	Give typical name; indicate approximate percentages of sand and gravel, max. size; angularity, surface condition, and hardness of the coarse grains; local or geologic name and other pertinent descriptive information; and symbol in parentheses.		Atterberg limits below "A" line or PI less than 4 (Above "A" line with PI between 4 and 7 are borderline cases requiring use of dual symbols.)	GM
			GC	Clayey gravels, gravel-sand-clay mixtures.	Plastic fines (for identification procedures see CL below)			Atterberg limits above "A" line with PI greater than 7 (Above "A" line with PI between 4 and 7 are borderline cases requiring use of dual symbols.)	GC
	Sands More than half of coarse fraction is smaller than No. 4 sieve size.	Clean Sands (Little or no fines)	SW	Well-graded sands, gravelly sands, little or no fines.	Wide range in grain sizes and substantial amounts of all intermediate particle sizes.			$C_u = \frac{D_{60}}{D_{10}}$ Greater than 6; $C_c = \frac{(D_{30})^2}{D_{10} \times D_{60}}$ Between one and 3	SW
			SP	Poorly-graded sands, gravelly sands, little or no fines.	Predominantly one size or a range of sizes with some intermediate sizes missing.	Example: Silty sand, gravelly; about 20% hard, angular gravel particles ½-in. max. size; rounded and subangular sand grains coarse to fine; about 15% nonplastic fines with low dry strength; well compacted and moist in place; alluvial sand; (SM).		Not meeting all gradation requirements for SW	SP
		Sands with Fines (Appreciable amount of fines)	SM	Silty sands, sand-silt mixtures.	Nonplastic fines or fines with low plasticity. (for identification procedures see ML below)			Atterberg limits below "A" line or PI less than 4 (Limits plotting in hatched zone with PI between 4 and 7 are borderline cases requiring use of dual symbols.)	SM
			SC	Clayey sands, sand-clay mixtures.	Plastic fines (for identification procedures see CL below.			Atterberg limits above "A" line with PI greater than 7 (Limits plotting in hatched zone with PI between 4 and 7 are borderline cases requiring use of dual symbols.)	SC

Identification Procedures on Fraction Smaller than No. 40 Sieve Size

Major Divisions (1)	Major Divisions (2)	Group Symbols (3)	Typical Names (4)	Dry Strength (Crushing characteristics)	Dilatancy (Reaction to shaking)	Toughness (Consistency near PL)	Information Required for Describing Soils (6)
Fine-grained Soils More than half of material is smaller than No. 200 sieve size.	Silts and Clays Liquid limit less than 50	ML	Inorganic silts and very fine sands, rock flour, silty or clayey fine sands or clayey silts with slight plasticity.	None to slight	Quick to slow	None	Give typical name, indicate degree and character of plasticity, amount and max. size of coarse grains, color in wet condition, odor if any, local or geologic name, and other pertinent descriptive information; and symbol in parentheses.
		CL	Inorganic clays of low to medium plasticity, gravelly clays, sandy clays, silty clays, lean clays.	Medium to high	None to very slow	Medium	
		OL	Organic silts and organic silty clays of low plasticity.	Slight to medium	Slow	Slight	For undisturbed soils add information on structure, stratification, consistency in undisturbed and remolded states, moisture and drainage conditions.
	Silts and Clays Liquid limit greater than 50	MH	Inorganic silts, micaceous or diatomaceous fine sandy or silty soils, elastic silts.	Slight to medium	Slow to none	Slight to medium	
		CH	Inorganic clays of high plasticity, fat clays.	High to very high	None	High	Example: Clayey silt, brown, slightly plastic, small percentage of fine sand, numerous vertical root holes, firm and dry in place, loess, (ML).
		OH	Organic clays of medium to high plasticity, organic silts.	Medium to high	None to very slow	Slight to medium	
Highly Organic Soils		Pt	Peat and other highly organic soils.	Readily identified by color, odor, spongy feel and frequently by fibrous texture.			

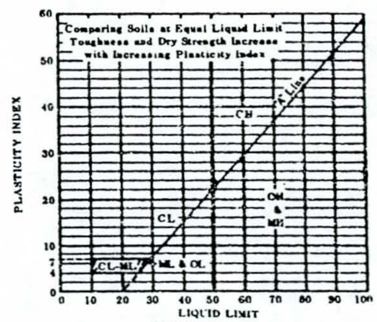

PLASTICITY CHART
For laboratory classification of fine-grained soils

(1) Boundary classifications: Soils possessing characteristics of two groups are designated by combinations of group symbols. For example GW-GC, well-graded gravel-sand mixture with clay binder. (2) All sieve sizes on this chart are U. S. standard.

FIELD IDENTIFICATION PROCEDURES FOR FINE-GRADED SOILS OR FRACTIONS

These procedures are to be performed on the minus No. 40 sieve size particles, approximately 1/64 in. For field classification purposes, screening is not intended, simply remove by hand the coarse particles that interfere with the tests.

Dilatancy (Reaction to shaking)

After removing particles larger than No. 40 sieve size, prepare a pat of moist soil with a volume of about one-half cubic inch. Add enough water if necessary to make the soil soft but not sticky. Place the pat in the open palm of one hand and shake horizontally, striking vigorously against the other hand several times. A positive reaction consists of the appearance of water on the surface of the pat which changes to a livery consistency and becomes glossy. When the sample is squeezed between the fingers, the water and gloss disappear from the surface, the pat stiffens and finally it cracks or crumbles. The rapidity of appearance of water during shaking and of its disappearance during squeezing assist in identifying the character of the fines in a soil.

Very fine clean sands give the quickest and most distinct reaction whereas a plastic clay has no reaction. Inorganic silts such as a typical rock flour, show a moderately quick reaction.

Dry Strength (Crushing characteristics)

After removing particles larger than No. 40 sieve size, mold a pat of soil to the consistency of putty, adding water if necessary. Allow the pat to dry completely by oven, sun, or air drying and then test its strength by breaking and crumbling between the fingers. This strength is a measure of the character and quantity of the colloidal fraction contained in the soil. The dry strength increases with increasing plasticity.

High dry strength is characteristic for clays of the CH group. A typical inorganic silt possesses only very slight dry strength. Silty fine sands and silts have about the same slight dry strength, but can be distinguished by the feel when powdering the dried specimen. Fine sand feels gritty whereas a typical silt has the smooth feel of flour.

Toughness (Consistency near plastic limit)

After removing particles larger than the No. 40 sieve size, a specimen of soil about one-half inch cube in size is molded to the consistency of putty. If too dry, water must be added and if sticky, the specimen should be spread out in a thin layer and allowed to loose some of its moisture by evaporation. Then the specimen is rolled out by hand on a smooth surface or between the palms into a thread about one-eighth inch in diameter. The thread is then folded and rerolled repeatedly. During this manipulation the moisture content is gradually reduced and the specimen stiffens, finally loses its plasticity, and crumbles when the plastic limit is reached.

After the thread crumbles, the pieces should be lumped together and a slight kneading action continued until the lump crumbles.

The tougher the thread near the plastic limit and the stiffer the lump when it finally crumbles, the more potent is the colloidal clay fraction in the soil. Weakness of the thread at the plastic limit and quick loss of coherence of the lump below the plastic limit indicate either inorganic clay of low plasticity, or materials such as kaolin-type clays and organic clays which occur below the A-line.

Highly organic clays have a very weak and spongy feel at the plastic limit.

APPROVAL RECOMMENDED BY

G.W. Outland

ASS'T CHIEF DEPUTY ENGINEER
LOS ANGELES COUNTY FLOOD CONTROL DISTRICT

REVISIONS		
MARK	DATE	DESCRIPTION

DRAWN BY JJG — DESIGNED BY
LOGGED BY — CHECKED BY GLB
SUBMITTED BY [signature] 4/1/65
DIVISION ENGINEER FOUNDATION AND TESTING

LOS ANGELES COUNTY FLOOD CONTROL DISTRICT

UNIFIED SOIL CLASSIFICATION SYSTEM

APPROVED BY Walter J. Wood, CHIEF ENGINEER

SCALE	DATE	NO. 2-0413
NONE	3-22-65	SHEET 1 OF 1

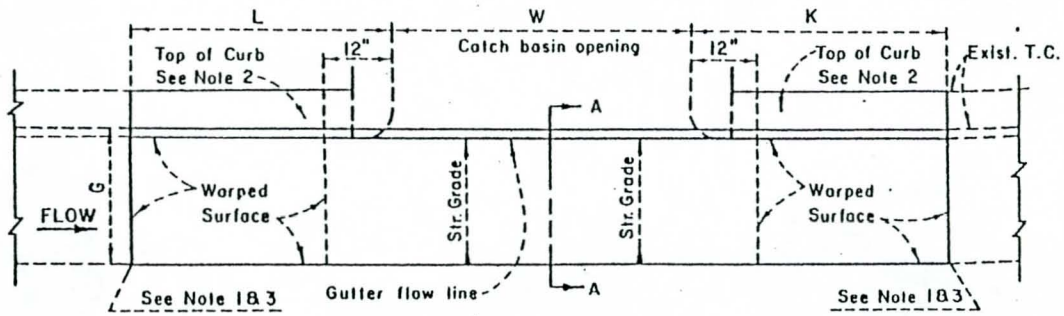

PLAN

For Catch Basins Nos. 1, 2, 3, 6, 7 & 9 (2)

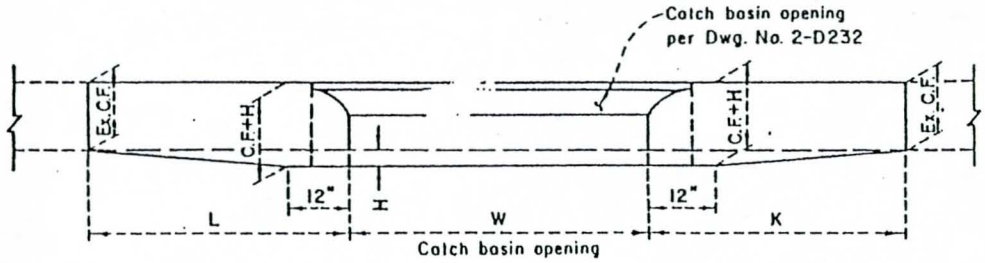

ELEVATION

Note: Taken along Gutter Flow Line

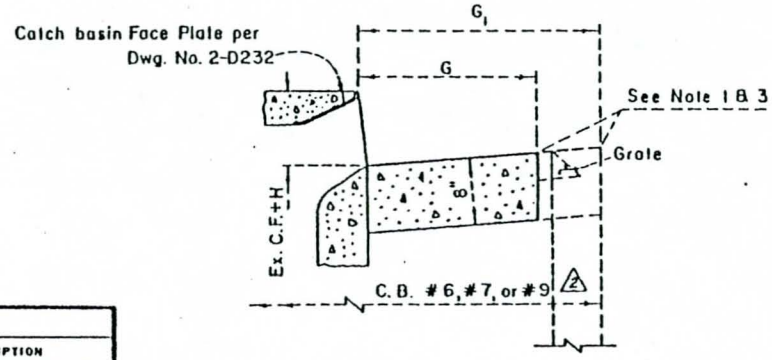

SECTION A-A

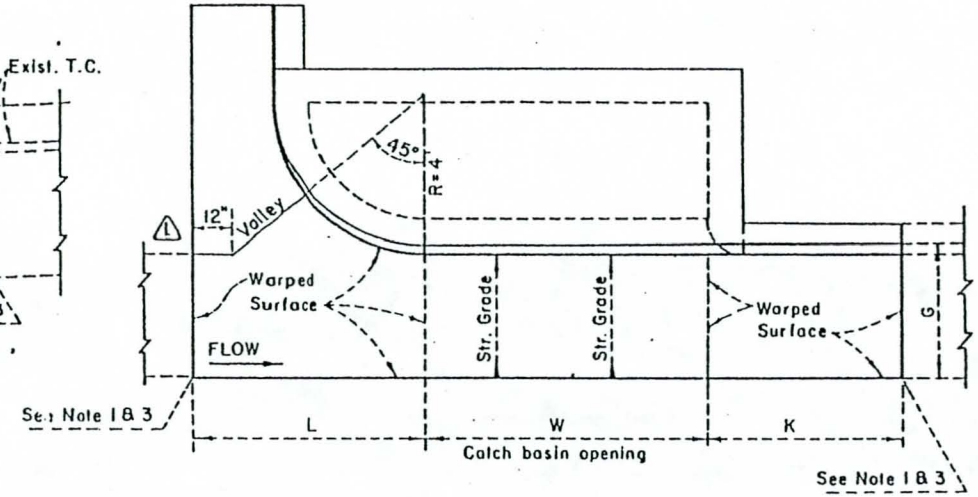

PLAN

For Catch Basin No. 8
Case B only

NOTES:

(1) 1. Elevations at outer corners and outer edge shall conform to finished street surface unless otherwise shown on project drawings.

2. Where no curb exists, curbs shall be constructed between ends of Local Depression. The curb section shall conform to that of the controlling agency.

3. G = Existing gutter for Catch Basins Nos. 1, 2, 3, and 8 (Case B).
   G_1 = Measured to outer edge for Catch Basins Nos. 6, 7, and 9 (see Section A-A). (2)
   L = K = 6 feet unless otherwise specified on project drawings.
   H = 1 inch when G = 1 foot.
   H = 2 inches for lengths of G greater than 1 foot. On Catch Basin No. 8, Case B, H shall be measured at the ends of W (catch basin opening).

4. Concrete compressive strength shall be 3,000 p.s.i. at 28 days.

5. This standard may be used to intercept flows from both directions. (Exceptions: Catch Basins Nos. 6 and 8).

DRAWN BY	REVISIONS		
A. SH.	MARK	DATE	DESCRIPTION
CHECKED BY K.O.	(1)	5-10-68	REVISED (A to H) & Title
	(2)	12-1-73	ADDED C.B. No 9
DESIGNED BY K.O.			
SUBMITTED BY C.W.H.			

LOS ANGELES COUNTY
FLOOD CONTROL DISTRICT

LOCAL DEPRESSION NO. 4

(1)

RECOMMENDED BY C. F. Eshelby, DIVISION ENGINEER - O&M

APPROVAL RECOMMENDED BY G. W. Rutland, ASS'T CHIEF DEPUTY ENGINEER

APPROVED BY Walter J. Wood, CHIEF ENGINEER

SCALE	DATE	DWG. NO. 2-D 415
NONE	MAR., 1966	SHEET 1 OF 1

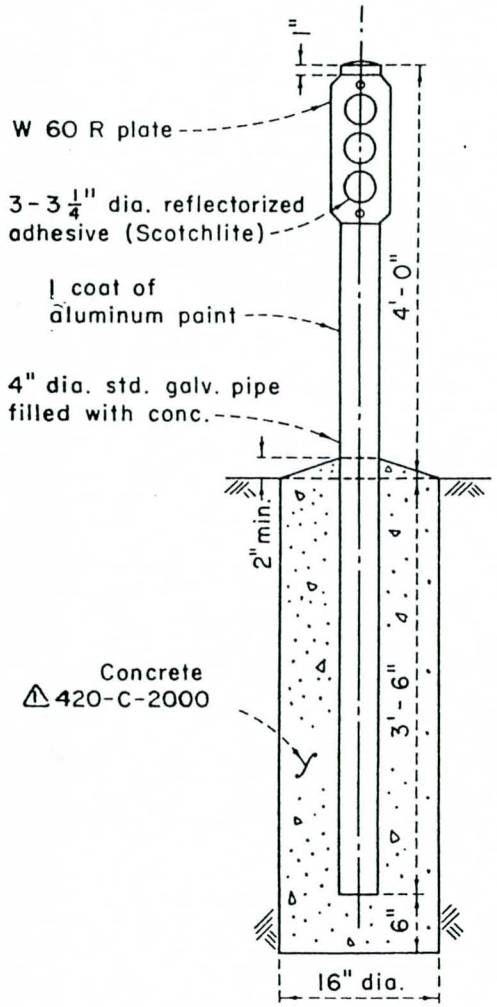

ELEVATION

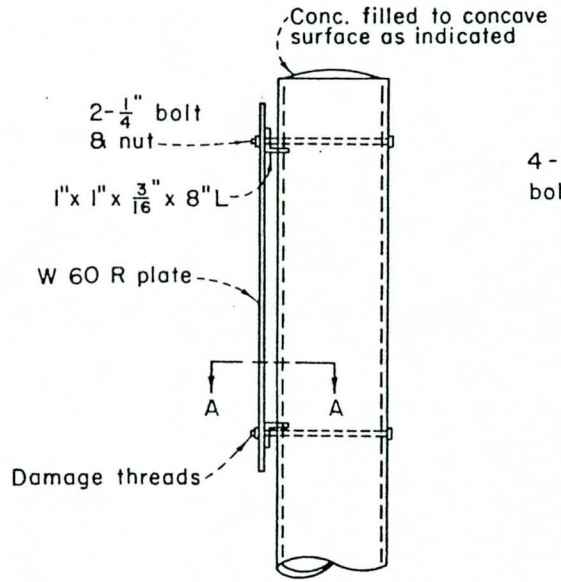

DETAIL B-B

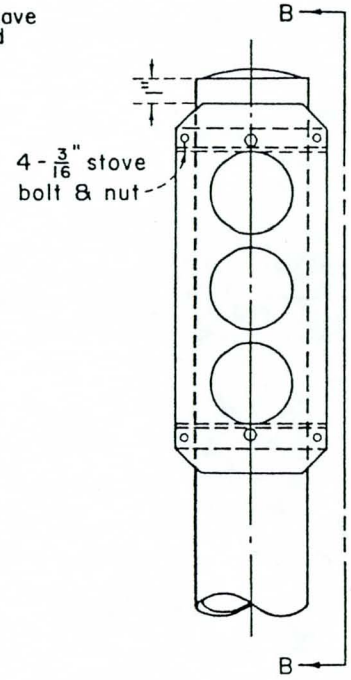

DETAIL C

NOTES:

1. W 60 R plate shall be per State of California "Manual of Warning Signs, Lights and Devices for Use in Performance of Work Upon Highway."
2. The reflectors shall be cut from yellow "Scotchlite"- flat top reflective sheeting, as manufactured by Minnesota Mining and Manufacturing Company, of District-approved equivalent.
3. One-fourth-inch bolts shall be tack coated with asphaltic paint prior to placement of concrete fill in pipe.
4. All ferrous parts shall be galvanized or coated with aluminum paint.
5. All concrete shall be 420-C-2000. △1

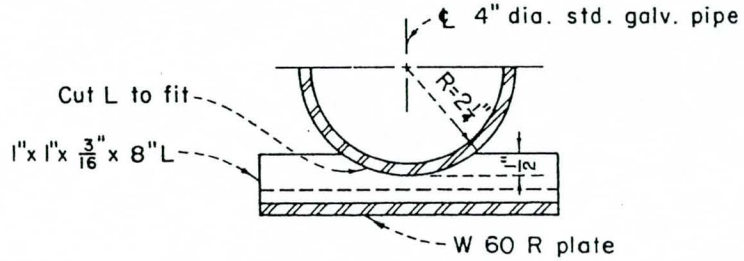

SECTION A-A

Note: bolt not shown

DRAWN BY	REVISIONS		
ASH	MARK	DATE	DESCRIPTION
CHECKED BY K.O.	△1	4-1-72	REVISED CONCRETE DESIGNATION
DESIGNED BY K.O.			
SUBMITTED BY C.W.H.			

LOS ANGELES COUNTY
FLOOD CONTROL DISTRICT

CLEARANCE MARKER

RECOMMENDED BY C F Eshelby DIVISION ENGINEER DESIGN

APPROVAL RECOMMENDED BY F. W. Wilson ASS'T CHIEF DEPUTY ENGINEER

APPROVED BY Walter J. Wood 5-17-66 ASS'T CHIEF ENGINEER

SCALE	DATE	DWG. NO. 2-D 416
NONE	5-10-66	SHEET 1 OF 1

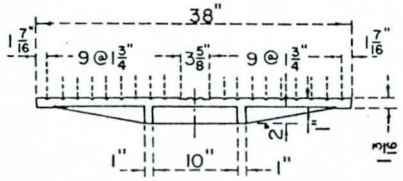

SECTION A-A

Scale: 1" = 1'-0"

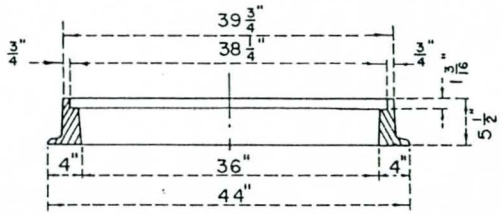

SECTION B-B

Scale: 1" = 1'-0"

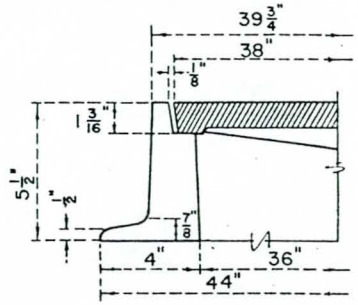

DETAIL

Scale: 3" = 1'-0"

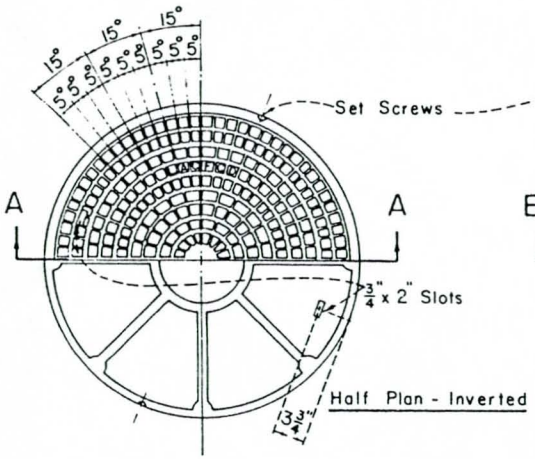

PLAN OF COVER

WEIGHT - 340 LBS.

Scale: 1" = 1'-0"

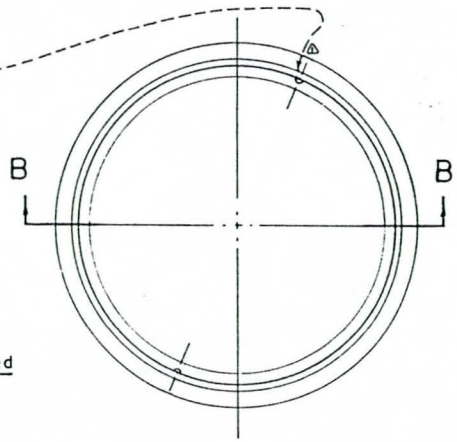

PLAN OF FRAME

WEIGHT - 335 LBS.

Scale: 1" = 1'-0"

NOTES:

1. The Manhole Frame and Cover shall be made of gray cast iron conforming to the latest A.S.T.M. standard A48, class 30 or better.
2. All parts of the Manhole Frame and Cover except machined surfaces shall be coated with asphaltum paint.
3. △3. The Manhole Frame and Cover shall be inspected by the engineer prior to shipment. Acceptance will be indicated by marking with the District's stencil.
4. Covers shall bear the letter "D" for Storm Drain structures.
5. Covers for Manholes located in right of way, easements, alleys, parkways and all other places except paved streets shall be provided with allen socket set screw locking devices. The Contractor shall drill and tap two holes to a depth of 1" at 90° to slots and install 3/4" x 3/4" allen socket set screws therein.
6. △6. Foundry Mark and Heat Number shall be shown on the inside of the frame and on the bottom of the cover.
7. △7. The weights of the frame and cover shall not vary more than two percent from those given hereon.

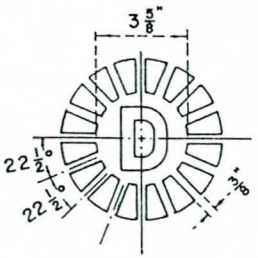

DETAIL OF LETTER

Scale: 3" = 1'-0"

Note: Surface of Letter shall be flush with finished surface of cover.

DRAWN BY	REVISIONS		
S.Y.H.	MARK	DATE	DESCRIPTION
CHECKED BY R.J.S.	△1	3-22-68	Location of set screws
DESIGNED BY V.M.	△2	10-14-70	Added note
SUBMITTED BY C.W.H.	△3	1-14-71	Added note
	△4	1-14-71	Revised Note 3

LOS ANGELES COUNTY
FLOOD CONTROL DISTRICT

SPECIAL MANHOLE FRAME AND COVER

RECOMMENDED BY C. F. Fahlberg DIVISION ENGINEER (DESIGN)

APPROVAL RECOMMENDED BY Milan W. Ransom ASS'T CHIEF DEPUTY ENGINEER

APPROVED BY Walter J. Wood CHIEF ENGINEER

SCALE	DATE	DWG. NO. 2-D427
AS SHOWN	JAN., 1968	SHEET 1 OF 1

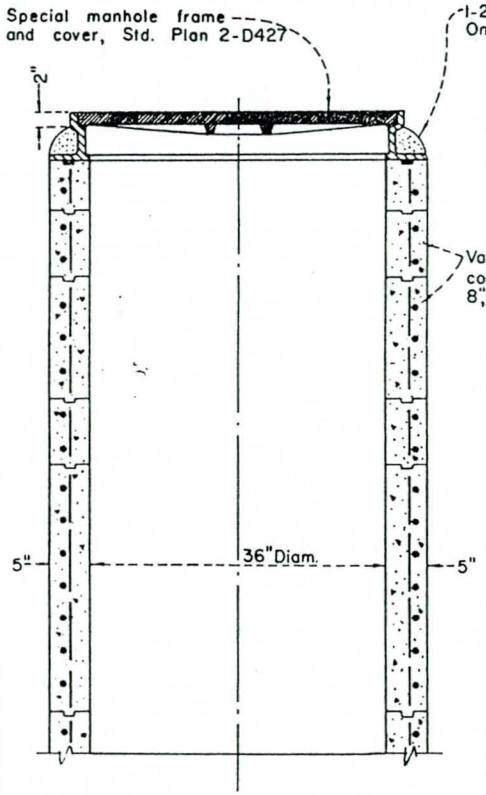

VERTICAL SECTION
OF SPECIAL MANHOLE SHAFT
WITH GRADE RING RISERS

SCALE: 1" = 1'-0"

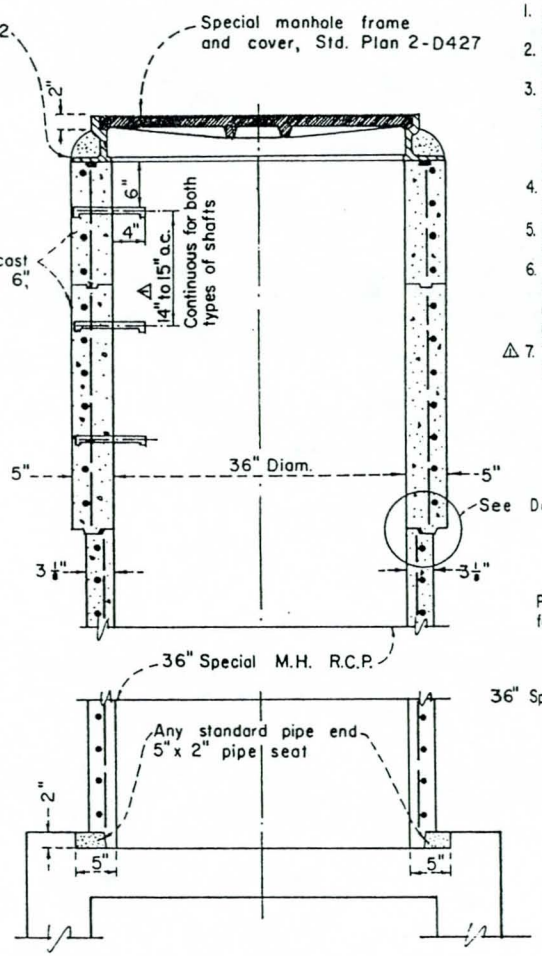

VERTICAL SECTION
OF SPECIAL MANHOLE SHAFT
WITH REINFORCED CONCRETE PIPE

SCALE: 1" = 1'-0"

NOTES:

1. All joints shall be filled with 1-2 mortar and neatly pointed or wiped on inside of shaft.
2. Collar of 1-2 mortar around cover frame shall be omitted in rock and oil streets and in paved streets.
3. Steps shall be 3/4 inch round galvanized steel. Top step shall be placed 6 inches beneath the manhole cover frame. Width of all steps shall be 14 inches between leg centers. Spacing of steps in shaft shall be 14" to 15" △ on center. See Std. Dwg. 2-D96.
4. The concrete used shall be of such strength so as to develop 3500 p.s.i. or greater in 28 days.
5. In lieu of modifying the special manhole R.C.P. as shown on the detail, a precast transition ring may be used.
6. The precast manhole structures will be inspected by the Engineer prior to shipment to the job site, and he will indicate acceptance by marking the structures with the District's stamp.
7. △ The surfaces of cones shall be smooth and neatly finished. Shafts with imperfect molding or honeycomb surfaces will not be accepted.

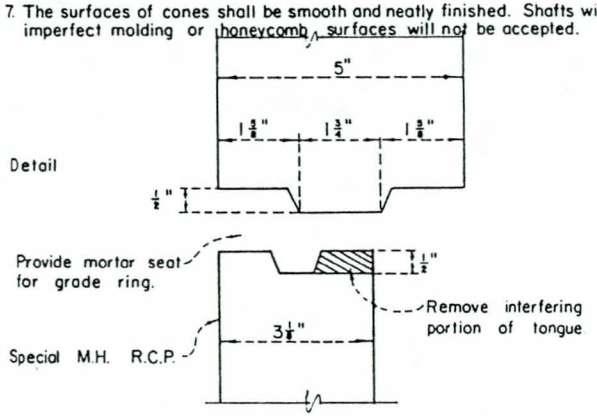

DETAIL SCALE: 1/2" = 1"

DRAWN BY	REVISIONS		
S.Y.H.	MARK	DATE	DESCRIPTION
CHECKED BY R.J.S.	△	11-19-70	Step Spacing and added note 7.
DESIGNED BY V.M.			
SUBMITTED BY C.W.H.			

LOS ANGELES COUNTY
FLOOD CONTROL DISTRICT

CONCRETE RINGS AND PIPE
FOR
SPECIAL MANHOLE SHAFT

RECOMMENDED BY: E. F. Schulling, DIVISION ENGINEER - DESIGN
APPROVAL RECOMMENDED BY: Milton W. Ransom, ASS'T CHIEF DEPUTY ENGINEER
APPROVED BY: Walter J. Wood, CHIEF ENGINEER

SCALE	DATE	DWG. NO. 2-D428
AS SHOWN	JAN. 1968	SHEET 1 OF 1

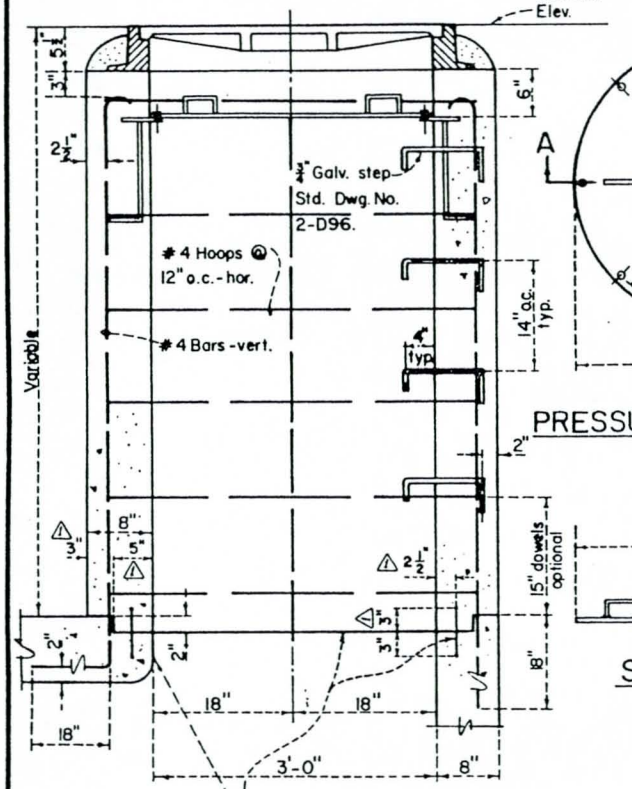

Manhole or storm drain conduit

Provide construction joint with continuous waterstop when manhole shaft is not poured monolithic with manhole or storm drain conduit

VERTICAL SECTION OF SPECIAL PRESSURE MANHOLE SHAFT

Scale: 1" = 1'-0"

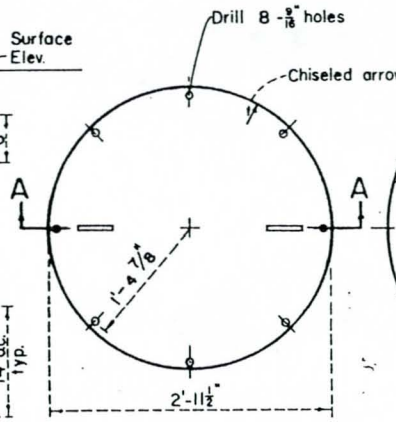

PRESSURE PLATE PLAN

Scale: 1" = 1'-0"

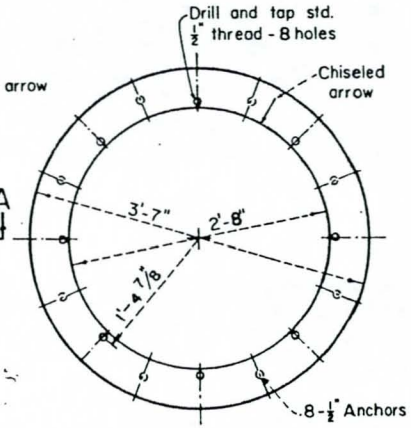

PRESSURE PLATE RING PLAN

Scale: 1" = 1'-0"

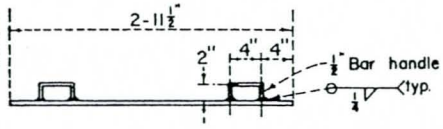

SECTION A-A

Scale: 1" = 1'-0"

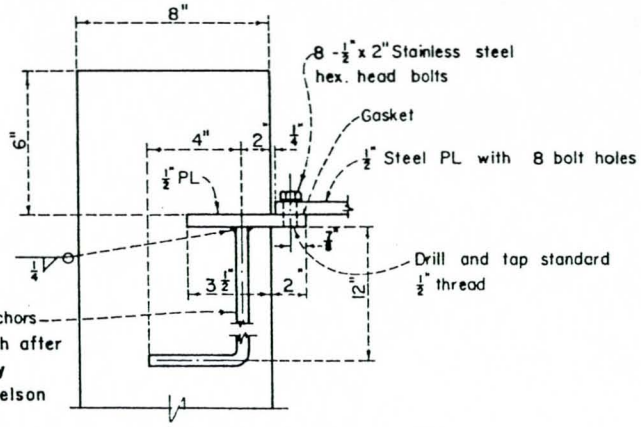

DETAIL

Scale: 3" = 1'-0"

NOTES:

1. This structure may be used for hydrostatic heads up to 25 feet above the pressure plate.
2. Where Special Pressure Manhole is specified on the storm drain plans, Special Pressure Manhole Shaft with pressure plate per this standard and Special Manhole Frame and Cover per standard drawing 2-D427 shall be used.
3. Concrete strength shall be f'_c = 3,000 p.s.i. at 28 days.
4. Gasket material shall be neoprene (or equal) 1/16" thick by 1¼" wide.
5. Reinforcement for the shaft shall be intermediate grade per ASTM A15. Hoops may be electrically butt welded or the ends lapped 18".
6. Bolts shall be stainless steel conforming to A.S.T.M. A320, Grade B8.
7. Pressure plate and pressure plate ring shall be steel conforming to ASTM A36. Plates shall be marked in sets and a chiseled arrow stamped on both plates, after drilling and tapping, to facilitate field assembly.
8. The pressure plate and pressure plate ring shall be galvanized.
9. △ See Contract Specifications for physical requirements of waterstop.

DRAWN BY	REVISIONS		
S.Y.H.	MARK	DATE	DESCRIPTION
CHECKED BY R.J.S.	△	5-18-72	Add - waterstop & Note 9.
DESIGNED BY V.M.			
SUBMITTED BY C.W.H.			

LOS ANGELES COUNTY FLOOD CONTROL DISTRICT

SPECIAL PRESSURE MANHOLE SHAFT AND PRESSURE PLATE DETAILS

RECOMMENDED BY C. E. Cohelly — DIVISION ENGINEER - DESIGN

APPROVAL RECOMMENDED BY William W. Rawson — ASS'T CHIEF DEPUTY ENGINEER

APPROVED BY Walter J. Wood 4/16/69 — CHIEF ENGINEER

SCALE	DATE	DWG. NO. 2-D429
AS SHOWN	4-15-69	SHEET 1 OF 1

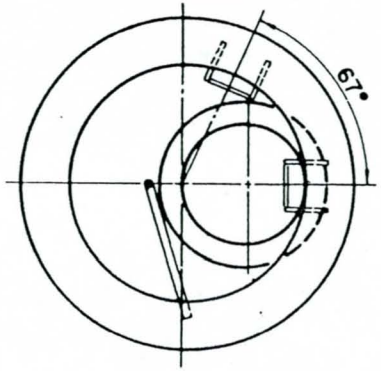

SECTION A-A

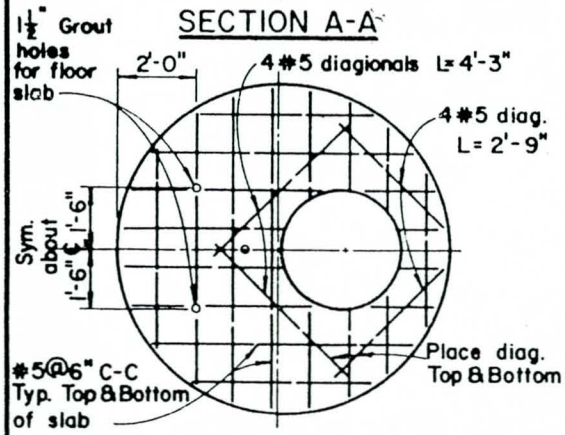

SECTION B-B

REINFORCEMENT DETAILS FOR FLOOR AND ROOF SLABS

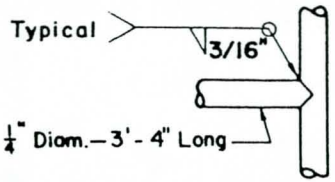

DETAIL A - Rotated 90°

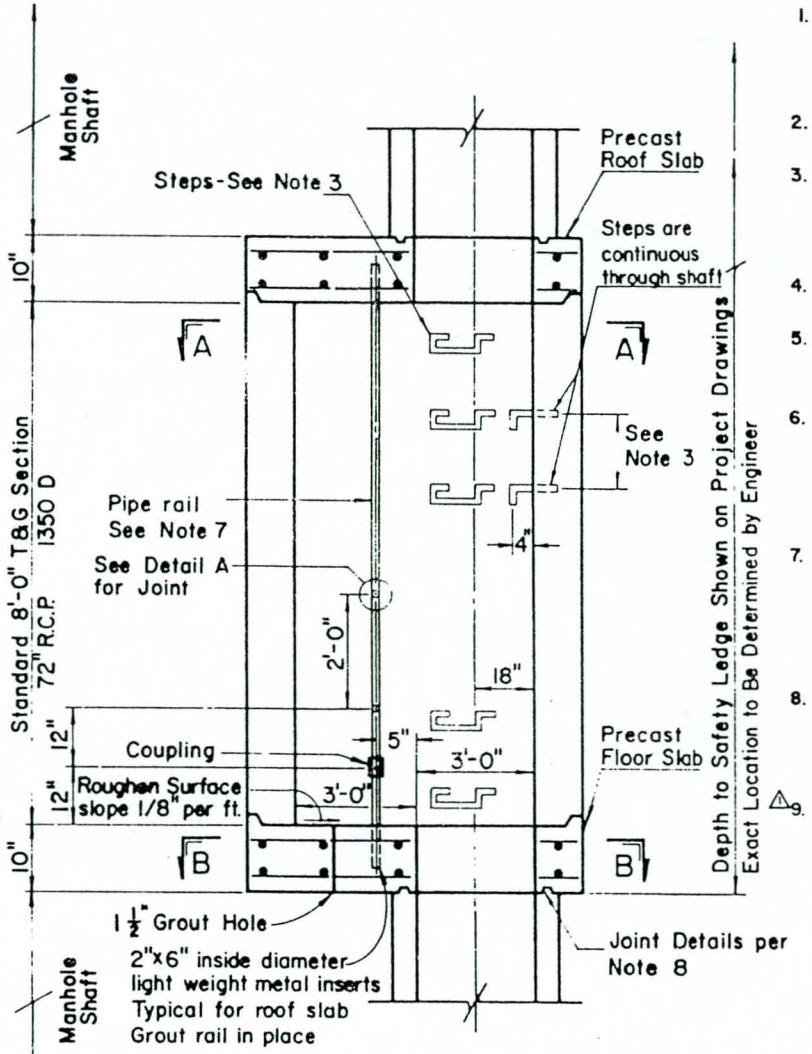

VERTICAL SECTION

NOTES

1. Manhole shaft safety ledge will be noted on the project drawings when required. Generally, it is to be constructed in deep manhole shafts 20 ft. or greater in depth.
2. A safety ledge shall not be used if a pressure manhole is required.
3. Steps shall be 3/4" round galvanized steel anchored 4" in the wall of the structure. Steps shall be placed to match the spacing of the manhole shaft, See District Drawing 2-D96.
4. Concrete shall develop 3000 p.s.i. or greater in 28 days.
5. Reinforcement shall be per ASTM A615, Grade 40. Reinforcing steel shall terminate 2" clear of concrete surfaces unless otherwise shown.
6. Grout holes, pipe, and fittings shall be provided in the floor slab. Pressure grouting shall be used to fill voids and to secure uniform bearing. The grout shall be neat cement grout and grouting pressures shall be as determined in the field by the Engineer.
7. Pipe rail shall be fabricated of 1-1/4" standard galvanized pipe composed of two sections 7.5' & 1.5' in length joined by a galvanized coupling. The coupling shall be threaded a minimum of 2" on each pipe length.
8. Roof and floor slabs shall be precast and keyed for reinforced concrete pipe sections as shown. All joints shall be filled with 1-2 mortar and neatly pointed or wiped on the inside.
9. △1 72" R.C.P. shall be provided with two circular cages of reinforcement.

DRAWN BY	REVISIONS		
G.D.M.	MARK	DATE	DESCRIPTION
CHECKED BY R.J.S.	△1	6-5-72	Added Note No. 9
DESIGNED BY V.C.M.			
SUBMITTED BY C.W.H.			

LOS ANGELES COUNTY
FLOOD CONTROL DISTRICT

MANHOLE SHAFT
SAFETY LEDGE

RECOMMENDED BY D. F. Milne DIVISION ENGINEER (DESIGN)
APPROVAL RECOMMENDED BY C. Magnuson ASS'T CHIEF DEPUTY ENGINEER
APPROVED BY A. E. Barrington 10-26-70 CHIEF ENGINEER

SCALE	DATE	DWG. NO. 2-D430
NONE	10-23-70	SHEET 1 OF 1

ASBESTOS CEMENT PIPE D-LOADS

R.C. PIPE D-LOAD	A.C. PIPE WALL THICKNESS	A.C. PIPE INSIDE DIAMETER (INCHES) 15	18	21	24	27	30	33	36	39	42
800	1.00 inches	5350	5250	5200	5150	5100	5100	5050	5050	5050	5050
	1.25	3700	3650	3600	3600	3550	3550	3550	3500	3500	3500
	1.50	3000	2950	2950	2900	2900	2900	2850	2850	2850	2850
	1.75	2650	2600	2550	2550	2550	2500	2500	2500	2500	2500
	2.00	2400	2350	2350	2300	2300	2300	2300	2250	2250	2250
	2.25	2250	2200	2150	2150	2150	2150	2100	2100	2100	2100
1000	1.00	6650	6550	6500	6450	6400	6350	6350	6300	6300	6250
	1.25	4650	4550	4500	4500	4450	4400	4400	4400	4400	4350
	1.50	3750	3700	3650	3650	3600	3600	3600	3550	3550	3550
	1.75	3300	3250	3200	3150	3150	3150	3100	3100	3100	3100
	2.00	3000	2950	2900	2900	2850	2850	2850	2800	2800	2800
	2.25	2750	2750	2700	2700	2650	2650	2650	2650	2600	2600
1200	1.00	8000	7850	7750	7700	7650	7600	7600	7550	7550	7500
	1.25	5550	5450	5400	5350	5350	5300	5300	5250	5250	5250
	1.50	4500	4450	4400	4350	4300	4300	4300	4250	4250	4250
	1.75	3950	3850	3850	3800	3750	3750	3750	3700	3700	3700
	2.00	3550	3500	3450	3450	3400	3400	3400	3400	3350	3350
	2.25	3300	3250	3250	3200	3200	3150	3150	3150	3150	3150
1400	1.00	9300	9150	9050	9000	8900	8900	8850	8800	8800	8750
	1.25	6450	6350	6300	6250	6200	6150	6150	6150	6100	6100
	1.50	5250	5150	5100	5050	5050	5000	5000	4950	4950	4950
	1.75	4550	4500	4450	4400	4400	4350	4350	4350	4300	4300
	2.00	4150	4100	4050	4000	4000	3950	3950	3950	3900	3900
	2.25	3850	3800	3750	3750	3700	3700	3650	3650	3650	3650
1600	1.00	10600	10450	10350	10250	10200	10150	10100	10050	10000	10000
	1.25	7400	7250	7200	7150	7100	7050	7000	7000	6950	6950
	1.50	6000	5900	5850	5800	5750	5700	5700	5650	5650	5650
	1.75	5200	5150	5100	5050	5000	5000	4950	4950	4950	4900
	2.00	4750	4650	4600	4600	4550	4500	4500	4500	4500	4450
	2.25	4400	4350	4300	4250	4250	4200	4200	4200	4150	4150
1800	1.00	11950	11750	11650	11550	11450	11400	11350	11300	11250	11250
	1.25	8300	8150	8100	8000	7950	7900	7900	7850	7850	7800
	1.50	6750	6650	6550	6500	6450	6450	6400	6350	6350	6350
	1.75	5850	5800	5700	5650	5650	5600	5600	5550	5550	5550
	2.00	5300	5250	5200	5150	5100	5100	5050	5050	5050	5000
	2.25	4950	4900	4800	4800	4750	4750	4700	4700	4700	4650

R.C. PIPE D-LOAD	A.C. PIPE WALL THICKNESS	A.C. PIPE INSIDE DIAMETER (INCHES) 15	18	21	24	27	30	33	36	39	42
2000	1.00 inches	13250	13050	12900	12800	12700	12650	12600	12550	12500	12500
	1.25	9200	9100	9000	8900	8850	8800	8750	8750	8700	8700
	1.50	7450	7350	7300	7200	7150	7150	7100	7100	7050	7050
	1.75	6500	6400	6350	6300	6250	6200	6200	6150	6150	6150
	2.00	5900	5800	5750	5700	5650	5650	5600	5600	5600	5550
	2.25	5500	5400	5350	5300	5300	5250	5250	5200	5200	5200
2200	1.00	14600	14350	14200	14100	14000	13900	13850	13800	13750	13750
	1.25	10150	10000	9850	9800	9750	9650	9650	9600	9550	9550
	1.50	8200	8100	8000	7950	7900	7850	7800	7800	7750	7750
	1.75	7150	7050	6950	6900	6850	6850	6800	6800	6750	6750
	2.00	6500	6400	6350	6300	6250	6200	6200	6150	6150	6100
	2.25	6050	5950	5900	5850	5800	5750	5750	5750	5700	5700
2400	1.00	15900	15650	15500	15350	15250	15200	15100	15050	15000	14950
	1.25	11050	10900	10750	10650	10600	10550	10500	10450	10450	10400
	1.50	8950	8800	8700	8650	8600	8550	8500	8500	8450	8450
	1.75	7800	7700	7600	7550	7500	7450	7400	7400	7350	7350
	2.00	7100	6950	6900	6850	6800	6750	6750	6700	6700	6650
	2.25	6600	6500	6400	6350	6300	6300	6250	6250	6200	6200
2600	1.00	17200	17000	16750	16650	16500	16450	16350	16300	16250	16200
	1.25	11950	11800	11650	11550	11500	11400	11350	11350	11300	11250
	1.50	9700	9550	9450	9350	9300	9250	9200	9200	9150	9150
	1.75	8450	8300	8250	8150	8100	8050	8050	8000	8000	7950
	2.00	7650	7550	7450	7400	7350	7300	7300	7250	7250	7200
	2.25	7150	7000	6950	6900	6850	6800	6800	6750	6750	6700
2800	1.00	18550	18250	18050	17900	17800	17700	17600	17550	17500	17450
	1.25	12900	12700	12550	12450	12350	12300	12250	12200	12150	12150
	1.50	10450	10300	10150	10100	10000	9950	9950	9900	9850	9850
	1.75	9100	8950	8850	8800	8750	8700	8650	8600	8600	8550
	2.00	8250	8150	8050	7950	7900	7900	7850	7800	7800	7800
	2.25	7650	7550	7500	7400	7350	7350	7300	7250	7250	7250
3000	1.00	19850	19550	19350	19200	19050	18950	18850	10800	18750	18700
	1.25	13800	13600	13450	13350	13250	13150	13100	13050	13050	13000
	1.50	11200	11000	10900	10800	10750	10700	10650	10600	10550	10550
	1.75	9750	9600	9500	9400	9350	9300	9250	9250	9200	9200
	2.00	8850	8700	8600	8550	8500	8450	8400	8400	8350	8350
	2.25	8200	8100	8000	7950	7900	7850	7800	7800	7750	7750

NOTES;

1. D-loads listed are for Asbestos Cement Pipe where the velocity exceeds 10 feet per second.
2. D-loads for Asbestos Cement Pipe, where the velocity is 10 feet per second or less, shall be 1.5 times the D-load for comparable Reinforced Concrete Pipe. Refer to District Standard Drawing 2-D213.1.

DRAWN BY	REVISIONS		
G.D.M.	MARK	DATE	DESCRIPTION
CHECKED BY V.C.M.			
DESIGNED BY R.J.S.			
SUBMITTED BY C.W.H.			

LOS ANGELES COUNTY
FLOOD CONTROL DISTRICT

"D" LOAD TABLE FOR DESIGN OF ASBESTOS CEMENT PIPE

RECOMMENDED BY C. Magness DIVISION ENGINEER (DESIGN)

APPROVAL RECOMMENDED BY Milan W. Ranson ASS'T CHIEF DEPUTY ENGINEER

APPROVED BY Walter J. Wood 10/15/69 CHIEF ENGINEER

SCALE	DATE	DWG. NO. 2-D431
NONE	10-15-69	SHEET 1 OF 1

DETAILS FOR LENGTHS IN EXCESS OF 20 FEET

DETAILS FOR LENGTHS OF 20 FEET OR LESS

Notes:

1. All fence materials and fittings shall conform to "Standard Specifications for Public Works Construction" Section 206-6 and 206-7, unless otherwise shown.
2. The fabric shall be placed on the downstream side of the posts, stretched taut, and fastened as shown.
3. Posts shall be 1 3/8" x 1 3/8" x 1'-8" minimum, galvanized Tee fence posts.

REVISIONS	
NO. DATE	DESCRIPTION

LOS ANGELES COUNTY FLOOD CONTROL DISTRICT

BREAK AWAY FENCING

RECOMMENDED BY: [illegible]

DATE 7-8-71 | SCALE AS SHOWN

NO. 2-D447

SHEET 1 of 1

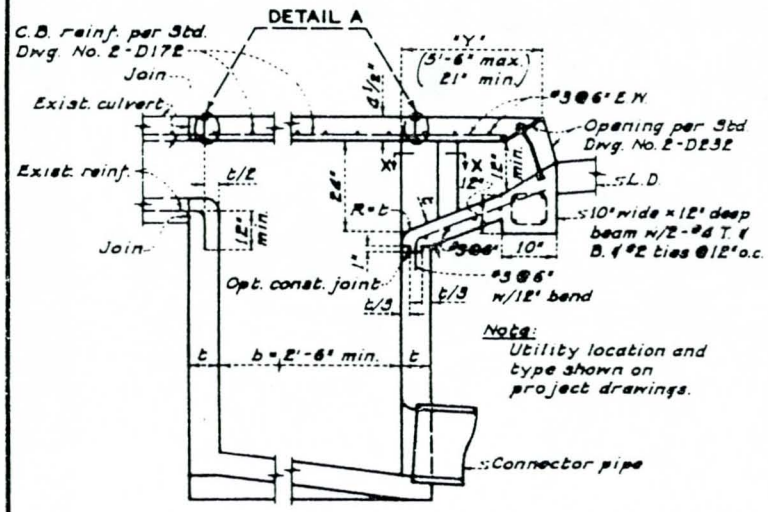

SECTION

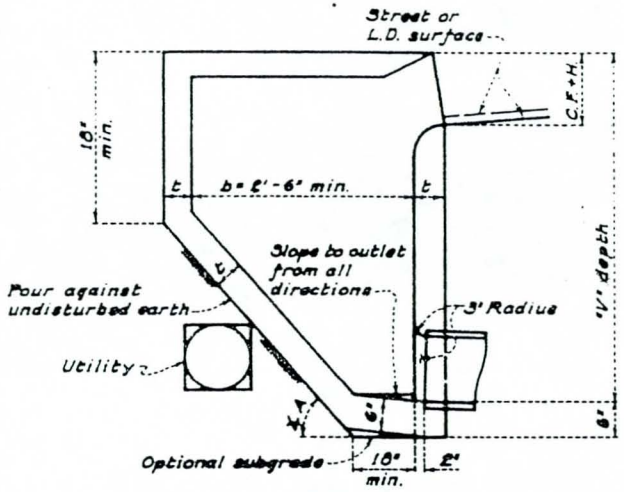

SECTION

CASE II

CATCH BASIN MODIFICATION TO AVOID EXISTING UTILITY

DESIGN NOTES

1. MODIFICATIONS ARE TO BE USED AS REQUIRED BY THE PROJECT DRAWINGS. ANY ADDITIONAL CHANGES ARE SUBJECT TO THE APPROVAL OF THE ENGINEER.
2. DETAILS NOT SHOWN SHALL BE PER THE APPLICABLE CATCH BASIN STANDARD DRAWINGS.
3. REFER TO THE PROJECT DRAWINGS FOR DETAILS OF THE UTILITY AND CULVERT.
4. INTERFERING PORTIONS OF EXISTING CULVERTS SHALL BE REMOVED ON A LINE NORMAL TO THE CULVERT CENTER LINE AND A PORTION OF THE CULVERT RECONSTRUCTED IF REQUIRED. SAW CUTTING SHALL BE USED TO PROVIDE A NEAT JOINT ON THE EXPOSED SURFACE.
5. △4 PLACE STEPS IN END WALL OF CATCH BASIN UNLESS OTHERWISE SHOWN.
6. WHEN REINFORCEMENT IS REQUIRED BY STANDARD DRAWING NO. 2-D 172, IT SHALL BE PLACED TO THE CONFIGURATION OF THE MODIFIED BASIN. IF ANGLE A EXCEEDS 45 DEGREES THE SLOPING PORTION OF THE INVERT SHALL BE REINFORCED AS THE REAR WALL. LENGTH OF BARS SHALL BE INCREASED AS NECESSARY.
7. ELECTRICALLY WELDED STEEL 1/2" x 8", SELECTION MAY BE EQUAL NOW BE USED IN LIEU OF THE REPORTED BAR ANCHORS. IF THE TOP SLABS OF THE CATCH BASIN AND THE CULVERT ARE NOT IN THE SAME PLANE THE ANCHORS ON THE CULVERT SIDE SHALL BE BENTTED.
8. △1 NO. 4 BARS @ 10" MAY BE USED IN LIEU OF NO. 3 BARS @ 6".

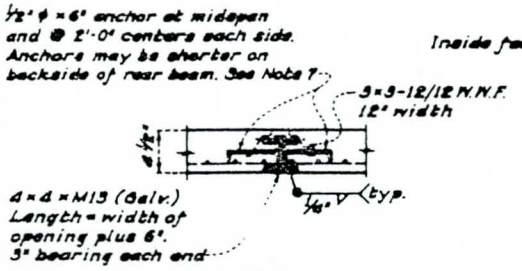

DETAIL A

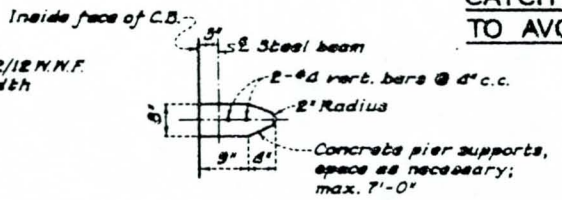

SECTION X-X

CASE I

CATCH BASIN MODIFICATION WITH REAR CULVERT ENTRANCE AND / OR ENTRANCE PROJECTION

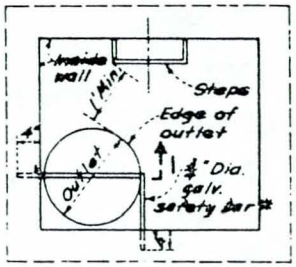

PLAN

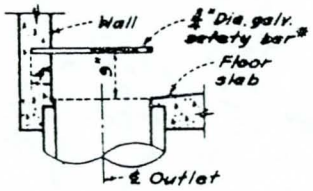

SECTION 1-1

*Note: Safety bar shall be 1/4" ϕ galv., hot-rolled steel per A.S.T.M. designation A-36.

△4 CASE III

SAFETY BAR FOR DROP OUTLET CATCH BASIN

DRAWN BY	REVISIONS		
R. Fujimoto	MARK	DATE	DESCRIPTION
CHECKED BY R. Smith	△1	2-[illegible]-74	#4 bars alternative
DESIGNED BY V. Martinez	△4	6-23-75	Added Case III & rev. Note 5
SUBMITTED BY [illegible]			

LOS ANGELES COUNTY FLOOD CONTROL DISTRICT

MODIFICATIONS FOR SIDE OPENING CATCH BASINS

RECOMMENDED BY [signature]
DIVISION ENGINEER (DESIGN)

APPROVED BY [signature] 5-2-72
CHIEF ENGINEER - CIVIL ENGINEER NO. 8786

SCALE	DATE	DWG. NO. 2-D461
None	Apr. 27, 72	SHEET 1 OF 1

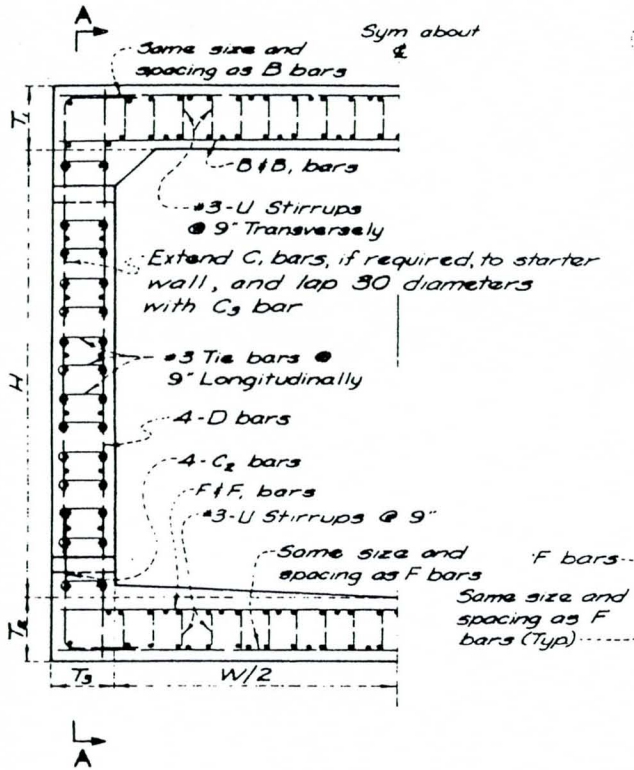

JACKED SECTION WITH ADDITIONAL REINFORCEMENT

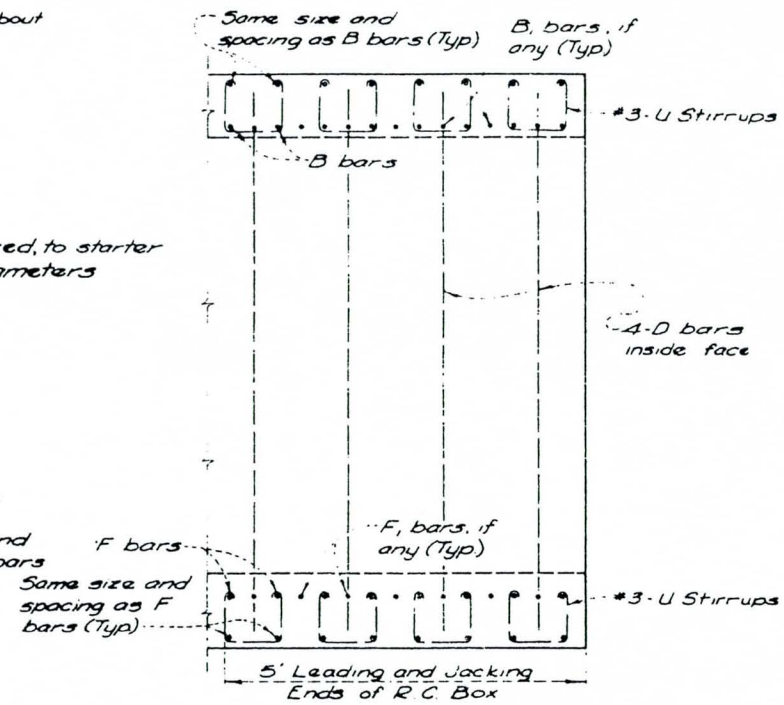

SECTION A-A

SIDE VIEW

NOTES:

1. THE CONTRACTOR SHALL USE JACKING HEADS OR LOAD SPREADING BEAMS OF SUCH DESIGN AND SIZE AS TO SPREAD THE JACKING FORCE UNIFORMLY OVER THE ENTIRE INVERT SECTION.
2. IF THE LOAD SPREADING DEVICE OR JACKING HEAD SELECTED DOES NOT PERMIT THE REQUIRED 20 BAR DIAMETER EXTENSION OF THE NORMAL LONGITUDINAL STEEL, CONTINUITY MAY BE MAINTAINED BY DOWELING FROM THE ADJACENT SECTION
3. THE LEADING EDGE OF THE CONDUIT SHALL BE EQUIPPED WITH A JACKING HEAD SECURELY ANCHORED THERETO. THE LENGTH AND DETAILS OF THE JACKING HEAD SHALL BE SUBJECT TO THE APPROVAL OF THE ENGINEER.
4. THE USE OF GUIDE RAILS, SLABS, CRADLES, ETC. WILL BE SUBJECT TO WRITTEN APPROVAL BY THE ENGINEER.
5. FOR MULTIPLE BARREL R.C. BOX SECTIONS THE ADDITIONAL STEEL SHALL BE PLACED IN ALL EXTERIOR WALLS AND SLABS
6. REFER TO THE PROJECT DRAWINGS FOR ADDITIONAL NOTES AND DETAILS.

ADDITIONAL LONGITUDINAL STEEL SCHEDULE

Member Thickness	Bar No and Spacing
6½" to 10"	#4 @ 9"
10½" to 13"	#5 @ 9"
13½ plus	#6 @ 9"

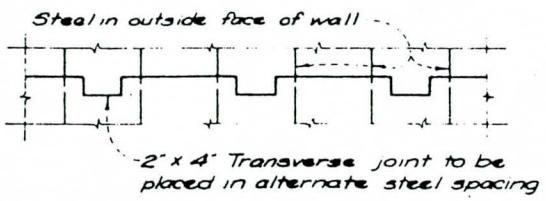

SECTION B-B

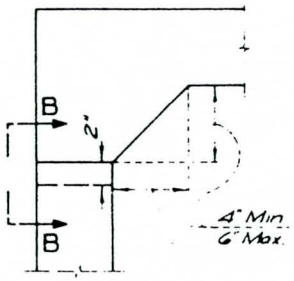

TOP OF WALL

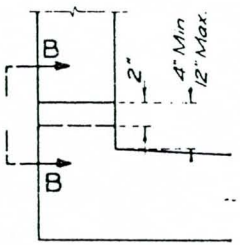

BASE OF WALL

CONSTRUCTION JOINT DETAILS FOR BOXES JACKED IN PLACE

LEGEND

- ● NORMAL R.C. BOX STEEL FOR SECTION TO BE JACKED.
- ○ ADDITIONAL R.C. BOX STEEL FOR MODIFIED SECTION.
- ADDITIONAL TRANSVERSE R.C. BOX STEEL.
- NORMAL TRANSVERSE R.C. BOX STEEL

REVISIONS		
MARK	DATE	DESCRIPTION

DRAWN BY B. Bartlett
CHECKED BY R. Smith
DESIGNED BY V. Martinez
SUBMITTED BY C. Hallstrom

LOS ANGELES COUNTY FLOOD CONTROL DISTRICT

ADDITIONAL REINFORCEMENT FOR JACKED R.C. BOX

RECOMMENDED BY [signature] DIVISION ENGINEER (DESIGN)

APPROVED BY [signature] 8-10-72 CHIEF ENGINEER CIVIL ENGINEER NO. 3726

SCALE	DATE	DWG. NO.
None	8-10-72	2-D465

SHEET 1 OF 1

GENERAL MINIMUM REQUIREMENTS

DESIGN

A SHORING SYSTEM SHALL CONSIST OF MAIN HORIZONTAL AND VERTICAL BRACING THAT WILL FUNCTION AS A TEMPORARY EARTH SUPPORTING STRUCTURE, SUPPORT FOR EXISTING IMPROVEMENTS, AND FOR PROTECTION OF WORKMEN. SHORING FOR EXCAVATIONS SHALL BE DESIGNED TO WITHSTAND NOT LESS THAN THE LOADS INDICATED HEREON AND SHALL COMPLY WITH THE STATE OF CALIFORNIA, DEPARTMENT OF INDUSTRIAL RELATIONS, CONSTRUCTION SAFETY ORDERS UNLESS MODIFIED ON THIS DRAWING OR IN THE SPECIAL PROVISIONS OF THE SPECIFICATIONS.

A. SOIL PARAMETERS "Kw"

Kw IS THE PRODUCT OF THE COEFFICIENT OF ACTIVE EARTH PRESSURE (K) AND THE UNIT WEIGHT OF SOIL (w).

VALUES OF "Kw" SHALL NOT BE LESS THAN NOTED IN THE SPECIAL PROVISIONS OF THE SPECIFICATIONS.

B. VERTICAL OR HORIZONTAL SHORES

SHORES SHALL BE DESIGNED FOR P = 0.8KwH UNLESS SOLID SUPPORT SHORES ARE USED IN WHICH CASE P = 0.6KwH MAY BE USED. SHORES SHALL NOT BE LESS THAN 2 INCHES THICK AND 8 INCHES WIDE, SPACED A MAXIMUM OF 9 FEET C-C HORIZONTALLY, AND EXTEND FROM TOP TO BOTTOM OF EXCAVATION. WHEN PILES ARE USED FOR VERTICAL SHORES, THE EMBEDMENT LENGTH AND ANY ANCHOR DETAILS SPECIFIED MUST BE SUPPORTED BY CALCULATIONS.

DEFINITIONS

1. SHEETING - A WALL OF PLANKS PLACED AGAINST THE TRENCH EARTH FACE, SPANNING VERTICALLY BETWEEN HORIZONTAL SUPPORTS.
2. LAGGING - A WALL OF PLANKS PLACED AGAINST THE TRENCH EARTH FACE, SPANNING HORIZONTALLY BETWEEN VERTICAL SUPPORTS.
3. TYPE A SOLID SUPPORT SHORES - EITHER CONTINUOUS ABUTTING SHEETING OR LAGGING (LAGGING MAY BE INTERMITTENTLY SPACED IF THE LOAD CONDITIONS PERMIT) PLACED IMMEDIATELY AFTER THE EXCAVATION REACHES THE SUBGRADE.
4. TYPE B SOLID SUPPORT SHORES - EITHER ABUTTING SHEETING OR ABUTTING LAGGING PLACED IMMEDIATELY SUBSEQUENT TO EXCAVATION AND ESTABLISHMENT OF THE TRENCH WALL. IN NO CASES SHALL THE DEPTH OF THE UNSUPPORTED TRENCH WALL EXCEED 24 INCHES.

C. HORIZONTAL BRACES OR STRUTS

STRUTS SHALL BE DESIGNED FOR P = 0.8KwH AND A 400 LB. CONCENTRATED LOAD AT THE CENTER LINE. HORIZONTAL SPACING OF BRACES OR STRUTS SHALL NOT EXCEED 9 FEET C-C, UNLESS AN APPROVED WALER SYSTEM IS UTILIZED. THE WALERS MUST BE OF SUFFICIENT STRENGTH TO SUSTAIN THE REACTIONS FROM THE VERTICAL MEMBERS, AND BE OF SUFFICIENT STIFFNESS TO MINIMIZE DEFLECTIONS OF THE VERTICAL MEMBERS. TO FACILITATE PLACEMENT OF PIPE THE CONTRACTOR MAY:

1. REMOVE THE CROSS BRACING BELOW THE LEVEL OF THE TOP OF THE PIPE. REMOVAL OF BRACES SHALL BE LIMITED TO A DISTANCE OF 14 FT. IN ADVANCE OF THE PLACEMENT OF PIPE.
2. REMOVE AN ENTIRE VERTICAL SHORING SET PROVIDED THAT THE MAXIMUM SPACING BETWEEN THE REMAINING SETS DOES NOT EXCEED 14'0" C-C.
3. IF ITEMS 1 OR 2 ABOVE ARE USED, WORKMEN WILL NOT BE PERMITTED IN THAT PORTION OF THE TRENCH WHERE THE SUPPORT HAS BEEN REMOVED.

IMMEDIATELY SUBSEQUENT TO PLACEMENT OF THE PIPE THE CONTRACTOR SHALL REPLACE THE VERTICAL SHORING SET PREVIOUSLY REMOVED WITH A SET DESIGNED TO SUPPORT THE EXCAVATION WALL FROM THE TOP OF THE PIPE TO THE GROUND SURFACE.

TO FACILITATE CONSTRUCTION OF POURED-IN-PLACE STRUCTURES THE 5-FT. LIMITATION NOTED IN THE CONSTRUCTION SAFETY ORDERS ON SPACING OF CROSS BRACING WILL BE WAIVED FOR THE AREA BELOW THE TOP OF THE STRUCTURE.

D. WALERS OR STRINGERS

WALERS SHALL BE DESIGNED FOR P = 0.8KwH. SPECIAL ATTENTION SHALL BE EXERCISED IN DESIGNING FOR HORIZONTAL SHEAR AND FOR THE CONDITION WHERE INTERMEDIATE WALERS AND/OR CROSS BRACING ARE REMOVED.

E. EXISTING IMPROVEMENTS AND SURCHARGE LOADS

ALL EXISTING IMPROVEMENTS MUST BE CONSIDERED IN THE DESIGN OF THE SHORING SYSTEM AND PROTECTED IN PLACE UNLESS OTHERWISE INDICATED ON THE PROJECT DRAWINGS OR SPECIFICATIONS. PARALLEL UTILITIES EXCEPT FOR METALLIC CONDUITS USED FOR THE PURPOSE OF CONTAINING ELECTRICAL CABLES AND PIPES 4 INCHES OR LESS IN DIAMETER USED FOR LOW PRESSURE GAS DISTRIBUTION SYSTEMS OUTSIDE OF THE LIMITS OF VERTICAL EXCAVATIONS MUST NOT BE EXPOSED BY USING SLOPING EXCAVATIONS. ALSO, EXISTING IMPROVEMENTS SHALL NOT IMPOSE ADVERSE LOADS ON THE SHORING OR BE SUBJECTED TO ADVERSE LOADS CAUSED BY THE SHORING. IN ADDITION TO THE EARTH LOADS, THE SHORING SYSTEM MUST SUSTAIN LOADS IMPOSED BY TRAFFIC, CONSTRUCTION EQUIPMENT, ADJACENT STRUCTURES, OR ANY OTHER SURCHARGE LOADS. THE LOAD IMPOSED ON THE SHORING SYSTEM BY NORMAL STREET VEHICULAR TRAFFIC MAY BE ASSUMED TO BE EQUAL TO THE LOAD IMPOSED BY TWO FEET OF EARTH.

MATERIALS GENERAL

ALL MATERIALS USED FOR SHORING, SHEETING, AND LAGGING IN COMPLYING WITH THE PROVISIONS OF THIS STANDARD DRAWING, MAY BE NEW OR USED BUT SHALL BE FREE FROM DEFECTS AND DAMAGE THAT MIGHT IN ANY WAY IMPAIR THEIR PROTECTIVE FUNCTION. ALLOWABLE STRESSES SPECIFIED IN THE PUBLICATIONS LISTED HEREON MAY BE INCREASED BY ONE-THIRD.

A. LUMBER

△1 DESIGN FOR LUMBER SHALL BE IN ACCORDANCE WITH NATIONAL DESIGN SPECIFICATIONS FOR STRESS-GRADE LUMBER. THE GRADE OR STRUCTURAL PROPERTIES OF LUMBER USED FOR SHORING, SHALL CORRESPOND TO THAT SPECIFIED IN CURRENT STANDARD GRADING AND DRESSING RULES OR THE WEST COAST LUMBER INSPECTION BUREAU. ALL LUMBER MUST BEAR THE GRADE STAMP. USED MATERIAL MAY BE DESIGNED IN ACCORDANCE WITH THE STANDARD GRADING AND DRESSING RULES IN EFFECT AT THE TIME THE LUMBER WAS GRADED. THE MAXIMUM PERMISSABLE FLEXURAL STRESS SHALL NOT EXCEED 2000 POUNDS PER SQUARE INCH. THE 2000 p.s.i. STRESS LIMITATION INCLUDES THE ONE-THIRD INCREASE NOTED HEREINABOVE. NON-STRESS GRADE LUMBER FOR SOLID SUPPORT SHORES MAY BE USED WHEN Kw≤30 p.c.f. PROVIDING THE FOLLOWING THICKNESS AND SPACING REQUIREMENTS ARE OBSERVED. △1

MINIMUM ROUGH THICKNESS OF SHEETING OR LAGGING	MAXIMUM VERTICAL SPACING OF WALERS FOR SOLID SHEETING	MAXIMUM HORIZ. SPACING OF UPRIGHTS FOR LAGGING
2 INCHES	4 FEET	4 FEET
3 INCHES	7 FEET	7 FEET

HOWEVER, THE MINIMUM ROUGH THICKNESS AND MAXIMUM SPACING TABULATED ABOVE FOR NON-STRESS GRADE LUMBER MAY BE DISREGARDED PROVIDED STRESS GRADE LUMBER OR STEEL IS DESIGNED TO BE USED FOR SOLID SUPPORT SHORES.

B. STRUCTURAL STEEL

△1 DIMENSIONS, PROPERTIES, AND DESIGN SHALL BE IN ACCORDANCE WITH THE CURRENT AISC MANUAL OF STEEL CONSTRUCTION.

C. SPECIAL SHORING SYSTEMS

SYSTEMS SUCH AS SPEED-SHORE, TREN-SHORE, ETC., WILL BE ALLOWED ONLY IF THE CONTRACTOR FILES OR HAS FILED WITH THE DISTRICT SUBSTANTIATING CERTIFIED TESTS CLEARLY DENOTING THE CAPACITY OF THE SYSTEM. UNTESTED MEMBERS OF SPECIAL SYSTEMS, COMPOSITE MEMBERS, BUILT-UP MEMBERS, ETC., MUST BE THEORETICALLY DESIGNED. VERTICAL SHORES MUST BE AT LEAST 8 INCHES WIDE. STRUTS TESTED UNDER IDEAL OR LABORATORY CONDITIONS △1 SHALL BE USED WITH A MINIMUM SAFETY FACTOR OF 1.5

D. SHIELDS

1. SHIELDS ARE ACCEPTABLE AS A MEANS OF SHORING EXCAVATIONS, AS SHOWN ON CASE IV, WITH THE FOLLOWING RESTRICTIONS.
   a. △1 ZONE A SHALL NOT INTERCEPT PROPERTY LINES OR INTERCEPT AN AREA REQUIRED BY THE SPECIFICATIONS FOR TRAFFIC.
   b. ZONE A SHALL NOT CONTAIN ANY EXISTING UTILITY OTHER THAN METALLIC ELECTRIC CONDUITS OR PIPE FOUR INCHES OR LESS IN DIAMETER USED FOR LOW PRESSURE GAS DISTRIBUTION.
   c. ZONES A AND B SHALL NOT SUPPORT SURCHARGE DEAD LOADS SUCH AS PILING OR BUILDINGS.

   THE RESTRICTIONS STATED IN b ABOVE WILL BE WAIVED PROVIDED THE CONTRACTOR SUBMITS WRITTEN APPROVAL FROM THE OWNER OF THE UTILITY FOR HIS PROPOSED CONSTRUCTION METHOD. THE CONTRACTOR COMPLIES WITH ANY SUPPORT OR PROTECTION METHODS REQUIRED BY THE UTILITY COMPANY, AND THE OWNER OF THE UTILITY STATES, IN WRITING, THAT THEY WILL ACCEPT RESPONSIBILITY △1 FOR ALL CLAIMS FOR DAMAGES THAT MAY ARISE AS A RESULT OF DISTURBANCE TO THE UTILITY. AN ACCEPTABLE SHORING SYSTEM MUST BE INSTALLED WHEN THE SHIELD IS REMOVED.
2. THE LENGTH OF UNSUPPORTED TRENCH IN FRONT OF THE SHIELD SHALL BE 3 FEET MAXIMUM FROM THE FORWARD EDGE OF THE SHIELD TO THE TOE OF SLOPE BEING EXCAVATED.
3. SHIELDS SHALL CONFORM TO THE DESIGN CRITERIA NOTED HEREON.

CALCULATIONS AND DRAWINGS

SHORING SYSTEMS SHALL BE DESIGNED BY A CIVIL OR STRUCTURAL ENGINEER REGISTERED IN THE STATE OF CALIFORNIA.

A. COMPLETE CALCULATIONS MUST BE SUBMITTED TO THE DISTRICT NOTING ALL ASSUMPTIONS AND REFERENCES. CALCULATIONS SHALL BE BASED ON STANDARD METHODS AND PROCEDURES BY RECOGNIZED AUTHORITIES. COMPUTER PRINTOUTS AND OTHER SUBMITTALS THAT DO NOT CLEARLY INDICATE THE COMPUTATION METHOD WILL NOT BE ACCEPTED. CROSS-SECTIONS OR SKETCHES SHOWING THE LOCATION OF EXISTING IMPROVEMENTS AND UTILITIES SHALL BE INCLUDED WHEN THE TYPE OF SHORING IS AFFECTED.

B. DISTRICT STANDARD DRAWING 2-D 400 SHOWS THE FORMAT THAT IS TO BE USED. HOWEVER, THE SUPPORTING CALCULATIONS MAY BE ATTACHED ON LETTER-SIZED PAPER.

ACCEPTANCE

IF FOUND IN CONFORMANCE WITH THIS DRAWING AND THE SPECIFICATIONS, THE DISTRICT WILL INDICATE ACCEPTANCE BY SIGNING THE SUBMITTED DRAWINGS. IF THE METHOD SELECTED AND ACCEPTED BY THE DISTRICT DOES NOT PROVIDE ADEQUATE SUPPORT UNDER ACTUAL FIELD CONDITIONS, IT SHALL BE REPLACED WITH AN ACCEPTED ALTERNATE. THE DETAILS ARE ALSO SUBJECT TO THE REVIEW OF THE DIVISION OF INDUSTRIAL SAFETY. ANY DEVIATION FROM THE ACCEPTED DESIGN MUST BE APPROVED BY THE DISTRICT.

NOTE: IF THE TRENCH WALLS ARE SLOPED, Kw=25 VALUES MAY BE REDUCED BY THE PERCENTAGES TABULATED BELOW. FOR Kw VALUES OTHER THAN 25 THE PERCENTAGE REDUCTION SHALL VARY UNIFORMLY FROM 0 AT A VERTICAL SLOPE TO 100 AT A SLOPE EQUAL TO THE ANGLE OF REPOSE OF THE SOIL BUT NOT GREATER THAN THE REDUCTION SHOWN FOR Kw=25.

SLOPE RATIO (HORIZONTAL TO VERTICAL)	PERCENTAGE REDUCTION
1:5.1 to Vertical	0
1:2.1 to 1:5	33
3/4:1.1 to 1:2	67
Horizontal to 3/4:1	100

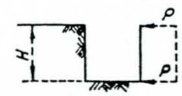

CASE I, VERTICAL

CASE II, SLOPING

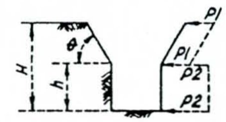

CASE III, COMBINED

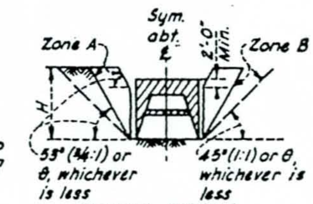

CASE IV, SHIELD

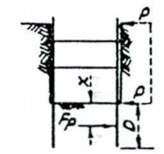

CASE V, BEAM PENETRATION △1

LEGEND:

P = UNIT PRESSURE IN p.s.f.

P1 = UNIT PRESSURE IN p.s.f. (USE Kw VALUE REQUIRED BY THE SLOPE)-

△1 P2 = UNIT PRESSURE IN p.s.f. (VERTICAL PORTION), VARIED FROM A VALUE EQUAL TO .8KwHT WHEN θ = 90° TO A VALUE EQUAL TO .8Kw [h+(.25(H-h))TAN θ] WHEN θ=53°

K = COEFFICIENT OF ACTIVE EARTH PRESSURE

w = UNIT WEIGHT OF SOIL IN p.c.f.

H = DEPTH OF EXCAVATION IN FEET.

h = DEPTH OF VERTICAL PORTION OF EXCAVATION IN FEET

θ = EXCAVATION ANGLE. NO SHORING IS REQUIRED AT THE ANGLE OF REPOSE AT WHICH THE SOIL WILL SAFELY STAND, BUT IN NO CASE SHALL THIS ANGLE BE GREATER THAN 53°

D = DEPTH OF PENETRATION IN FEET.

Fp = RESULTANT FORCE IN POUND PER FOOT OF BEAM WIDTH.

x = DISTANCE TO Fp FROM SUBGRADE IN FEET. △1

SUPERSEDES DWG. 2-D 399

REVISIONS		
MARK	DATE	DESCRIPTION
△1	7-75	Corrected equations, revised Materials General Notes A, B, C & D, & added Case V.

LOS ANGELES COUNTY
FLOOD CONTROL DISTRICT

CRITERIA FOR THE DESIGN OF SHORING FOR EXCAVATIONS

RECOMMENDED BY: Dymiline — DIVISION ENGINEER DESIGN

APPROVAL RECOMMENDED BY: C Turgusso — ASS'T CHIEF DEPUTY ENGINEER

APPROVED BY: A E Bunington — CHIEF ENGINEER — C.E. ENG NEER NO 8736 — 10-19-73

SCALE	DATE	DWG. NO. 2-D 466
None	10-4-73	SHEET 1 OF 1

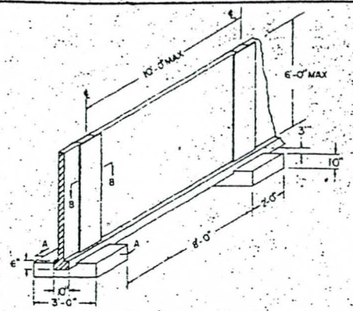

PAD FOOTING DETAIL

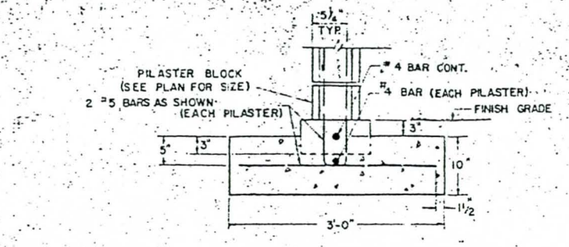

SECTION A - A

2-#7 WIRES LONGITUDINAL WITH 1-#14 CROSS WIRE AT 16" O.C. WELDED TO LONGITUDINAL WIRES (WIRES TO CONFORM TO A.S.T.M. A82) IN ALL LONGITUDINAL JOINTS. DURO-WALL LADDER TYPE NO. 4, EXTRA HEAVY, PREFABRICATED REINFORCEMENT OR EQUAL MAY BE SUBSTITUTED.

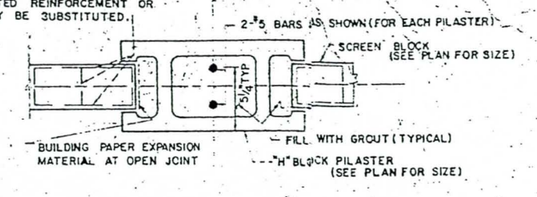

SECTION B-B

GENERAL NOTES

1. FOOTINGS SHALL BE LEVEL. IF GROUND SLOPES, STEP FOOTINGS SHALL BE USED. EACH STEP SHALL BE OF A HEIGHT TO FIT MASONRY SYSTEM. ALL EXCAVATIONS SHALL BE CLEAN AND CONTAIN NO LOOSE EARTH OR FOREIGN MATTER
2. CLASS 420-C-2000 CONCRETE SHALL BE USED FOR ALL FOOTINGS
3. MORTAR MIX SHALL BE CLASS "F".
4. CELLS CONTAINING REINFORCEMENT SHALL BE FILLED SOLIDLY WITH GROUT
5. LAP PREFABRICATED JOINT REINFORCING 6", OR ONE CROSS WIRE. LAP LAP VERTICAL STEEL 40 BAR DIAMETERS WHICH IS 15" FOR 3/8" BAR, 20" FOR 1/2" BAR, AND 25" FOR 5/8" BAR
6. THE FIRST COURSE MAY BE SET IN FRESH CONCRETE FOOTING.
7. THESE DESIGNS ARE NOT TO BE USED FOR RETAINING EARTH
8. THE SIZE, COLOR, AND TEXTURE OF THE PILASTER AND SCREEN BLOCKS SHALL BE AS SPECIFIED ON THE PLANS AND/OR AS APPROVED BY THE ENGINEER
9. ANY DEVIATION FROM THE DETAILS SHOWN HEREON SHALL BE DESIGNED BY A REGISTERED CIVIL ENGINEER AND SUBMITTED TO THE DISTRICT FOR APPROVAL
10. ALL MATERIALS AND METHODS SHALL COMPLY WITH THE STANDARD SPECIFICATIONS FOR PUBLIC WORKS CONSTRUCTION UNLESS OTHERWISE SHOWN
11. PILASTERS SHALL BE SPACED TO PROVIDE APPROXIMATELY EQUAL WIDTH PANELS. THE EXACT LOCATION SHALL BE DETERMINED IN THE FIELD.

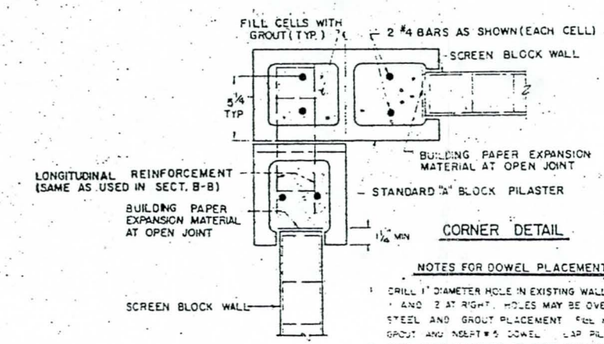

CORNER DETAIL

NOTE: INSERT SCREEN BLOCK PANELS INTO PILASTER A MIN OF 1½" AT OPEN JOINT, AND NO DEEPER THAN NECESSARY TO MEET THE CONSTRUCTION REQUIREMENTS AND MAINTAIN THE AESTHETICS OF THE WALL.

NOTES FOR DOWEL PLACEMENT DETAIL

1. DRILL 1" DIAMETER HOLE IN EXISTING WALL AS SHOWN IN ALTERNATES 1 AND 2 AT RIGHT. HOLES MAY BE OVERSIZED TO FACILITATE STEEL AND GROUT PLACEMENT. FILL HOLE WITH NONSHRINKING GROUT AND INSERT #5 DOWEL. LAP PILASTER STEEL 25"
2. CARE SHALL BE TAKEN TO AVOID DAMAGING EXISTING WALL REINFORCING WHEN DRILLING.
3. DOWELS SHALL BE PLACED SO AS TO MAINTAIN 1" EFFECTIVE d IN PILASTER
4. DOWELS SHALL BE ANGLED IN OPPOSITE DIRECTIONS IF POSSIBLE.
5. WHERE EXISTING WALL IS LESS THAN 10" THICK, OR LESS THAN 12" HIGH (INCLUDING TOP SLAB IF ATTACHED TO R.C. BOX) THE ENGINEER SHALL BE CONSULTED.
6. CONCRETE ANCHOR BOLTS WILL BE USED ONLY WITH DISTRICT APPROVAL

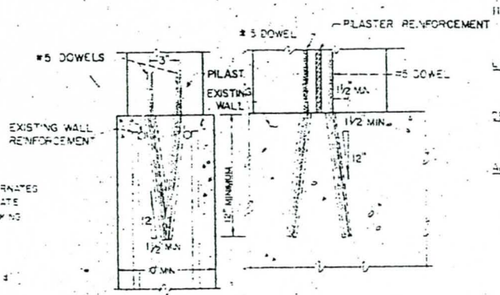

ALTERNATE #1 — CROSS SECTION

ALTERNATE #2 — FRONT VIEW

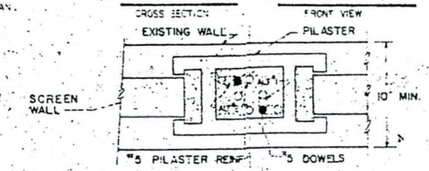

DOWEL PLACEMENT DETAIL
SHOWING TYPICAL CONSTRUCTION ON EXISTING CHANNEL WALL

DESIGN DATA

LIVE LOADS
WIND LOAD: 10 psf
SEISMIC LOAD: 0.20 X DEAD WEIGHT OF WALL

DEAD LOADS
WEIGHT OF CONCRETE: 150 psf
WEIGHT OF SCREEN BLOCKS: 22.5 psf

ALLOWABLE STRESSES (1970 U.B.C.)
f_c = 1500 psi
f_s = 33 ksi
f_c = 2000 psi AT 28 DAYS
f_s = 900 psi
SOIL BEARING: 1000 psf
f_c = 20,000 psi (PILASTER & FOOTING)
30,000 psi (JOINT REINF.)
n = 44 (REINF MASONRY)
n = 11 (REINF CONCRETE)

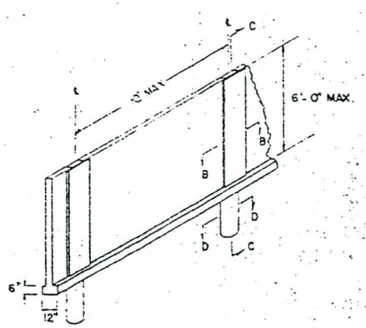

POSTHOLE FOOTING DETAIL

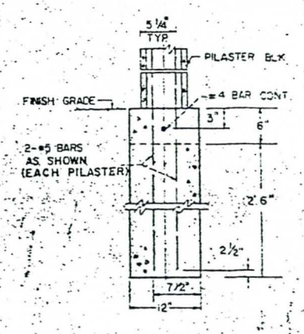

SECTION C-C

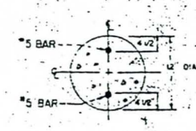

SECTION D-D

REVISIONS		
MK	DATE	DESCRIPTION

PREPARED BY: G. NADOW
CHECKED BY: R. HOLMBERG
DRAWN BY: J. MEIGS
SUBMITTED BY: [signature]

LOS ANGELES COUNTY FLOOD CONTROL DISTRICT

REINFORCED SCREEN BLOCK WALL

RECOMMENDED BY: [signature] DIV. WKR. ENGINEER — DATE 1-31-75
APPROVED BY: [signature] CHIEF ENGINEER (CIVIL ENGINEER OFFR)

NONE SCALE

NO. 2-D 470
SHEET ___ OF ___

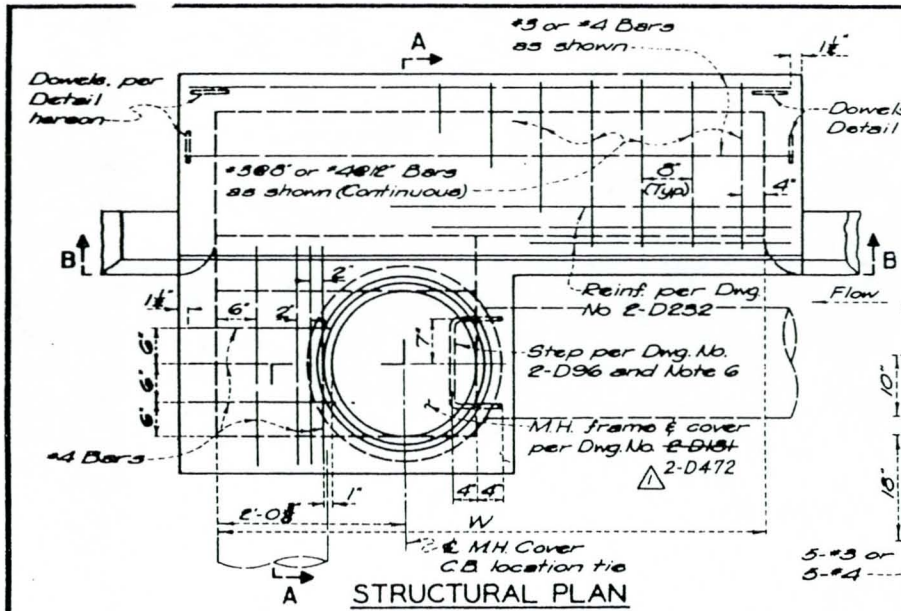

STRUCTURAL PLAN

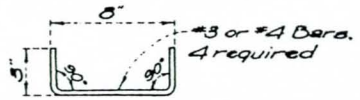

DETAIL OF DOWEL

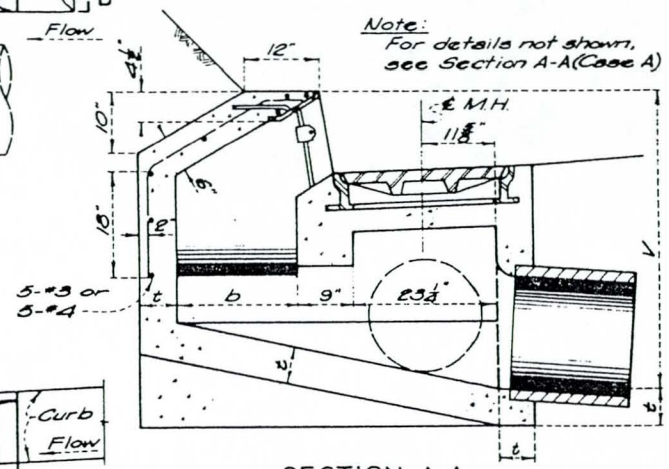

SECTION A-A

CASE B

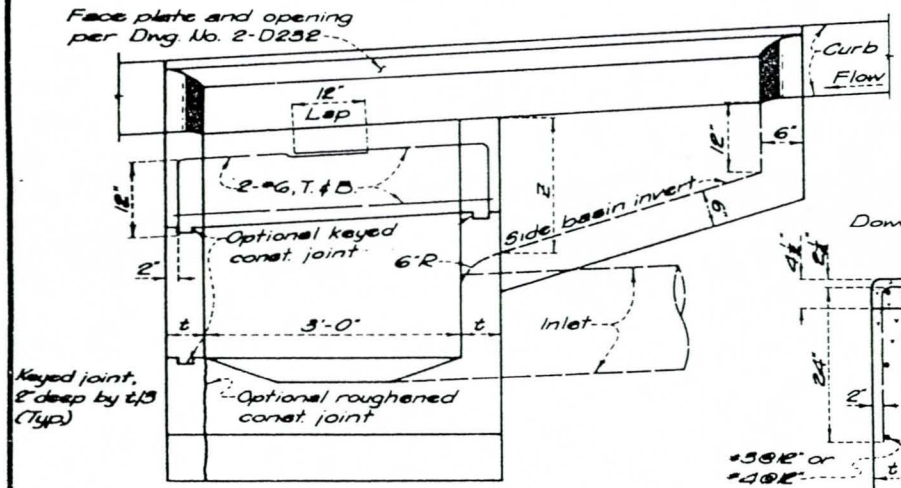

SECTION B-B

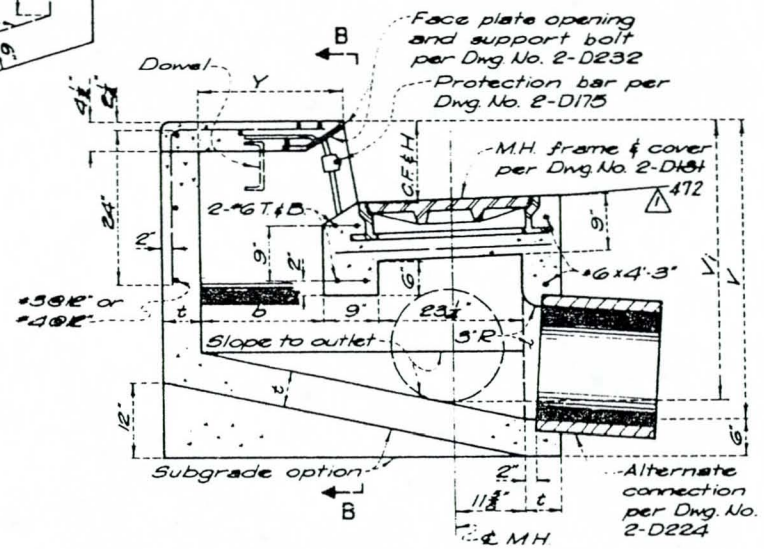

SECTION A-A

CASE A

NOTES

1. DESIGNATION:

   CATCH BASIN NO. 9 WITH LOCAL DEPRESSION NO. 4. CASE A UNLESS OTHERWISE NOTED ON THE GENERAL PLAN

2. CONNECTOR PIPES:

   PIPE MAY BE ON ANY ALIGNMENT AROUND THE WALLS OF THE MAIN BASIN CHAMBER AS SHOWN ON THE GENERAL PLAN. PIPE SHALL BE TRIMMED TO THE FINAL SHAPE AND LENGTH BEFORE THE PLACEMENT OF CONCRETE.

3. CONCRETE: DESIGN, fc'=3000 psi COMPRESIVE STRENGTH AT 28 DAYS. FLOOR OF THE BASIN SHALL SLOPE FROM ALL WALLS TO THE OUTLET AND SHALL BE GIVEN A STEEL-TROWELED FINISH SURFACE. STREET-SIDE WALLS OF THE BASIN SHALL BE POURED TO THE ELEVATION OF THE ADJACENT LOCAL DEPRESSION OR STREET SURFACE. CURVATURE OF THE SILL AND SIDE WALLS AT THE GUTTER OPENING SHALL BE FORMED BY CURVED FORMS; AND ALL EXPOSED EDGES, OR CORNERS, AND CONCRETE TO METAL FRAME EDGES SHALL BE GIVEN 1/4" RADIUS EDGER FINISH. SURFACE OF ALL EXPOSED CONCRETE SHALL CONFORM IN SLOPE, GRADE, COLOR, AND FINISH TO THE EXISTING, OR PROPOSED, CURB AND WALK ADJACENT TO THE BASIN.

4. REINFORCEMENT: (STANDARD DRAWING NO. 2-D171)

   TOP SLAB-AS REQUIRED ON THE STRUCTURAL PLAN. WALLS AND FLOOR-AS REQUIRED BY STANDARD DRAWING NO. 2-D172, SECTION 2.

5. DIMENSIONS: CURB FACE AT THE CATCH BASIN OPENING SHALL BE AS REQUIRED BY STD. DWGS. NO. 2-D415 OR AS SHOWN ON THE GENERAL PLAN.

   W=7', b=20", Y=24", V=4'-6", UNLESS OTHERWISE SHOWN ON THE GENERAL PLAN.

W	Z	V (MIN.)	t
7'	24"	4'-6"	6"
10'	24"	4'-6"	6"
14'	30"	4'-9"	6"
21'	36"	5'-0"	6"
		5'-1" (OR MORE)	8"

   b=15" TO 20" FOR (CASE A)
   b=20" ONLY FOR (CASE B)
   Vi FOR INFLOW PIPE AS SHOWN ON THE GENERAL PLAN.

6. STEPS: (STANDARD DRAWING NO. 2-D96)

   PLACE STEPS AT 12-INCH INTERVALS FROM THE FLOOR OF THE BASIN WITH THE TOP STEP AT 12 INCHES (MINIMUM) BELOW THE STREET SURFACE. CONSTRUCT STEPS ON FRONT WALL WHEN CONNECTOR PIPE IS ALIGNED TO END WALL.

DRAWN BY	REVISIONS		
B.T.B	MARK	DATE	DESCRIPTION
CHECKED BY V.C.M. & G.J.P.	1	3-1-74	Manhole Std.
DESIGNED BY G.J.P. & A.C.			
SUBMITTED BY R.J.S.			

LOS ANGELES COUNTY FLOOD CONTROL DISTRICT

CATCH BASIN NO. 9

PLAN, SECTIONS AND DETAIL

RECOMMENDED: Dymilue — DIVISION ENGINEER (MAINT.)

APPROVAL RECOMMENDED BY: E. Magness — ASS'T CHIEF/DEPUTY ENGINEER

APPROVED BY: A.E. Barrington — CHIEF ENGINEER - CIVIL ENGINEER NO. 8726 — 11-19-73

SCALE	DATE	DWG. NO. 2-D471
NONE	12-1-73	SHEET 1 OF 1

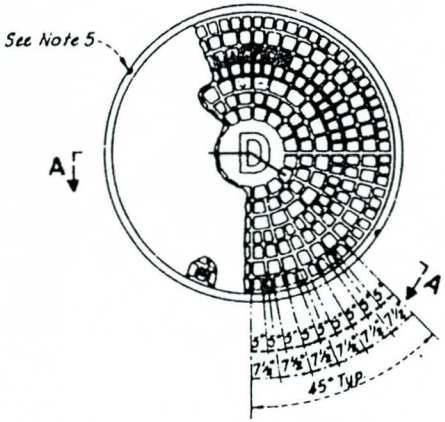

TOP PLAN OF COVER

WEIGHT 175 LBS.

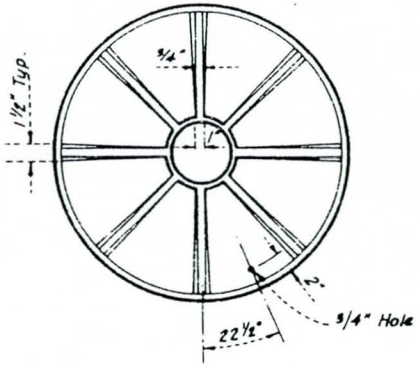

BOTTOM PLAN OF COVER

NOTES

1. MANHOLE FRAMES AND COVERS SHALL BE MADE OF GRAY CAST IRON CONFORMING TO ASTM A-48, CLASS 35, AND PAINTED WITH ASPHALTUM PAINT EXCEPT FOR MACHINED SURFACES.
2. FOUNDRY MARK SHALL BE SHOWN ON THE INSIDE OF THE FRAME AND ON THE BOTTOM OF THE COVER.
3. THE MANHOLE FRAME AND COVER SHALL BE INSPECTED BY THE ENGINEER PRIOR TO SHIPMENT. ACCEPTANCE WILL BE INDICATED BY MARKING WITH THE DISTRICT'S STENCIL.
4. COVERS SHALL BEAR THE LETTER "D" FOR STORM DRAINS.
5. COVERS FOR MANHOLES LOCATED IN EASEMENTS, ALLEYS, PARKWAYS, AND ALL OTHER PLACES EXCEPT PAVED STREETS SHALL BE PROVIDED WITH ALLEN SOCKET SET SCREW LOCKING DEVICES. THE CONTRACTOR SHALL DRILL AND TAP TWO HOLES TO A DEPTH OF 1 INCH AT 90 DEGREES TO PICK HOLE AND INSTALL 3/4-BY-3/4-INCH ALLEN SOCKET SET SCREWS.
6. COVER WAS DESIGNED, TESTED AND PROMULGATED BY THE APWA-AGC JOINT COOPERATIVE COMMITTEE SOUTHERN CALIFORNIA CHAPTER.
7. △1 THE WEIGHT OF THE COVER SHALL NOT VARY MORE THAN FIVE PER CENT FROM THAT GIVEN HEREON.

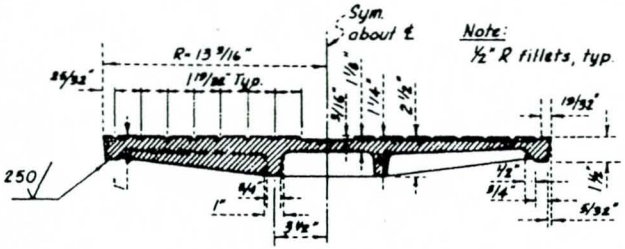

SECTION A-A

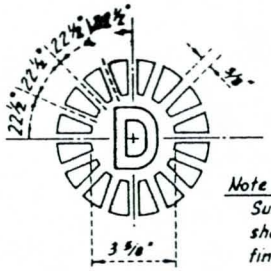

Note:
Surface of letter shall be flush with finished surface of cover.

DETAIL OF LETTER

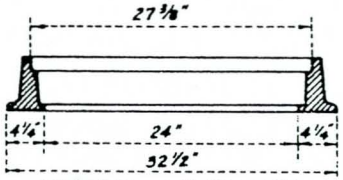

SECTION OF FRAME

WEIGHT 265 LBS.

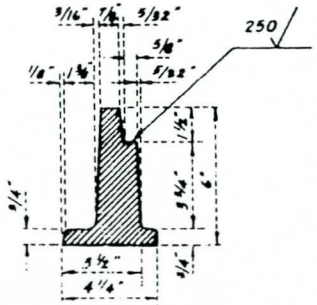

DETAIL OF FRAME

SUPERSEDES DWG. NO. 2-D181

LOS ANGELES COUNTY
FLOOD CONTROL DISTRICT

STANDARD
24-INCH MANHOLE FRAME AND COVER

DRAWN BY	REVISIONS		
J. Stephenson	MARK	DATE	DESCRIPTION
CHECKED BY V.C.W.	△1	2-75	Changed weight of M.H. frame and revised Note 7.
DESIGNED BY APWA-AGC			
SUBMITTED BY RJS			

RECOMMENDED BY D. Mulvihill, DIVISION ENGINEER (MAINT.)

APPROVAL RECOMMENDED BY C. Jacquess, ASST. CHIEF DEPUTY ENGINEER

APPROVED BY A. E. Broughton, CHIEF ENGINEER - CIVIL ENGINEER OFFR. 3-15-74

SCALE	DATE	DWG. NO. 2-D472
None	Mar 6, 1974	SHEET 1 OF 1

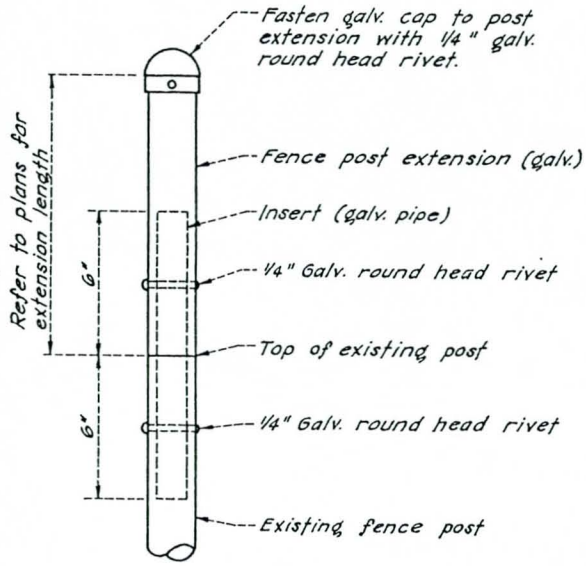

TYPE A

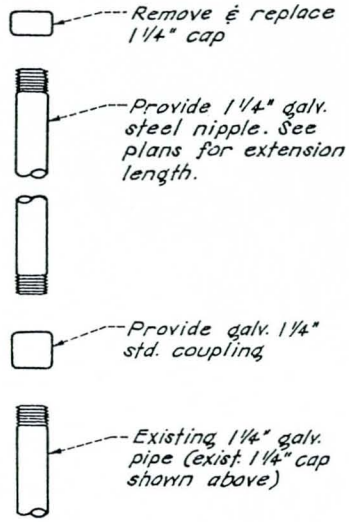

TYPE B

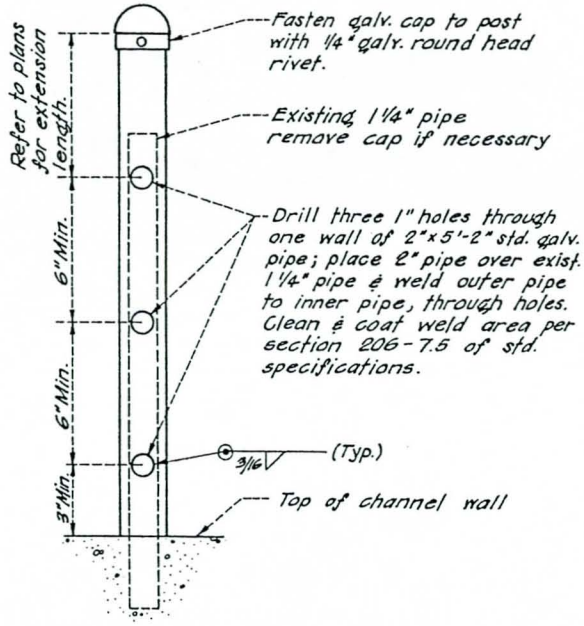

TYPE C

▲ General Note :

All existing pipe size may vary. The contractor shall verify in the field to determine exact size of existing pipe and required sleeve.

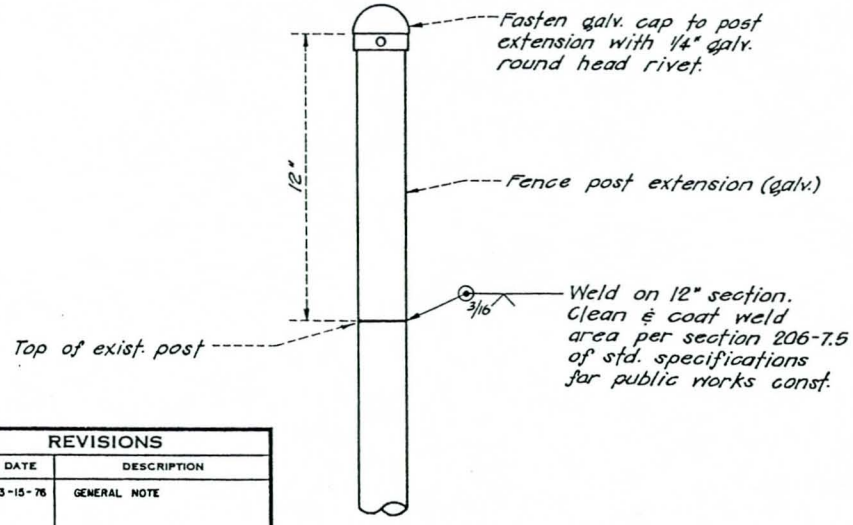

TYPE D

DRAWN BY	REVISIONS		
T. Rini	MARK	DATE	DESCRIPTION
CHECKED BY G. Nadow	▲	3-15-76	GENERAL NOTE
DESIGNED BY R. Holmberg			
SUBMITTED BY J. McElroy			

LOS ANGELES COUNTY
FLOOD CONTROL DISTRICT

TYPICAL FENCE POST EXTENSION DETAILS

RECOMMENDED BY — DIVISION ENGINEER (DESIGN)

APPROVAL RECOMMENDED BY — ASS'T CHIEF DEPUTY ENGINEER

APPROVED BY — CHIEF ENGINEER

SCALE	DATE	DWG. NO. 2-D473
NONE	Feb. '75	SHEET 1 OF 1

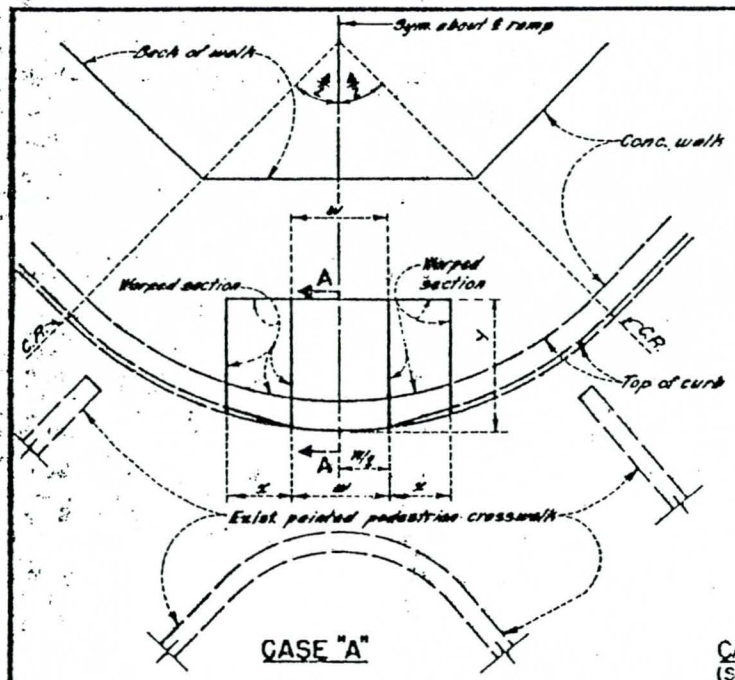

CASE "A"

CASE "D"
(SEE NOTE 2)

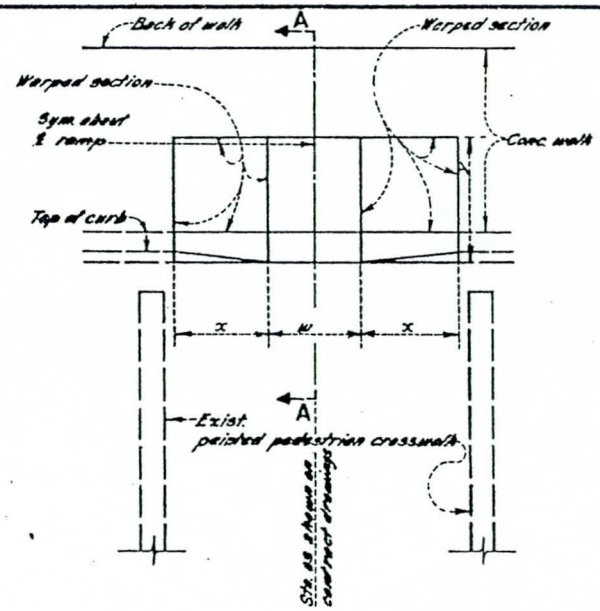

CASE "C"

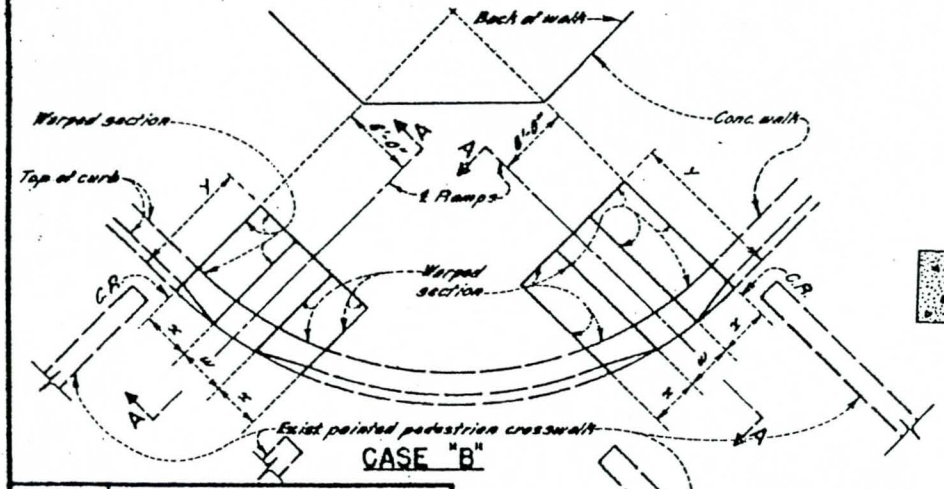

CASE "B"

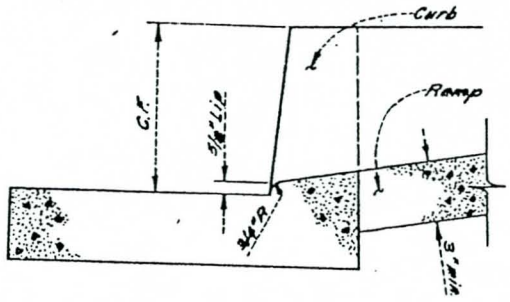

SECTION A-A

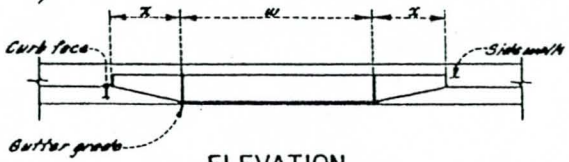

ELEVATION
(ALL CASES)

NOTES

1. SPECIFICATIONS
   STANDARD SPECIFICATIONS FOR PUBLIC WORKS CONSTRUCTION, (LATEST EDITION). SECTION 303-5 PERTAINING TO CONCRETE CURB AND WALK SHALL APPLY UNLESS OTHERWISE NOTED.

2. DEFINITION
   A SIDEWALK RAMP SHALL BE CONSTRUCTED WHEN SO INDICATED ON THE GENERAL PLAN IN LOCATIONS WHERE EXISTING CURB AND SIDEWALK MUST BE REMOVED AS A RESULT OF THE DISTRICT CONSTRUCTION. THE CASE SHALL BE AS GIVEN ON THE GENERAL PLAN.
   IN THE EVENT ONLY ONE RAMP ADJACENT TO A C.R. IS DESIRED, CASE B MAY BE MODIFIED BY ELIMINATING ONE RAMP. THIS CASE SHALL BE REFERRED TO AS CASE D ON THE GENERAL PLAN.

3. DIMENSIONS
   MINIMUM THICKNESS OF RAMP SHALL BE 3 INCHES. W=4'-0" UNLESS OTHERWISE SHOWN ON THE GENERAL PLAN. FOR 8" CURB X AND Y SHALL BE 64" UNLESS OTHERWISE NOTED ON THE GENERAL PLAN. WHEN CURB IS NOT 8" THEN X AND Y SHALL BE 8 X CURB FACE IN INCHES, UNLESS OTHERWISE NOTED ON THE GENERAL PLAN. USE C.R. AS LIMIT OF X DIMENSION WHEN X DIMENSION IS WITHIN 1' OF C.R. Y DIMENSION SHALL NOT EXTEND BEYOND BACK OF WALK. USE BACK OF WALK AS LIMIT OF Y DIMENSION WHEN LIMIT OF Y DIMENSION IS WITHIN 1' OF BACK OF WALK. 5/8 INCH LIP HAS TOLERANCE OF 1/8 INCH PLUS OR MINUS. FOR CASE "B" XSLOPES ADJACENT TO C.R. SHALL BE 48" UNLESS OTHERWISE NOTED.

4. CONCRETE
   THE CONCRETE SHALL BE PLACED ACCORDING TO SPECIFICATIONS SECTION 303-5 EXCEPT THE FINAL FINISH SHALL BE DONE WITH A HEAVY BROOM TRANSVERSE TO THE RAMP CENTERLINE.
   RAMP SHALL HAVE NO ABRUPT CHANGES IN ELEVATION OR ANGLE OF SLOPE.
   INTERFERING EXISTING SIDEWALK AND CURB SHALL BE REMOVED ACCORDING TO SPECIFICATION SUBSECTION 300-1.3.
   USE 517-C-2500 CONCRETE.

DRAWN BY	REVISIONS		
A. Trosch	MARK	DATE	DESCRIPTION
CHECKED BY G. Pedersen			
DESIGNED BY D. Greenwood			
SUBMITTED BY R. Smith			

LOS ANGELES COUNTY
FLOOD CONTROL DISTRICT

SIDEWALK ACCESS RAMP
FOR HANDICAPPED PERSONS

RECOMMENDED BY D. J. Milne — DIVISION ENGINEER (WORKS)
APPROVAL RECOMMENDED BY C. Fragassa — ASST. CHIEF DEPUTY ENGINEER
APPROVED BY A. E. Remington — CHIEF ENGINEER - CITY ENGINEER RO 8716 — 3-29-74

SCALE	DATE	DWG. NO. 2-D475
NONE	4-1-74	SHEET 1 OF 1

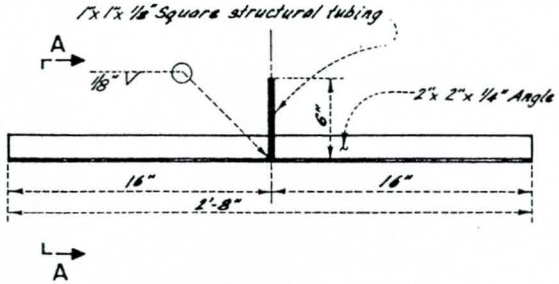

DETAIL OF CENTER STAND

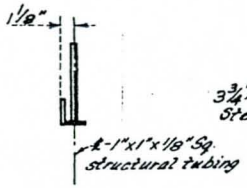

SECTION A-A

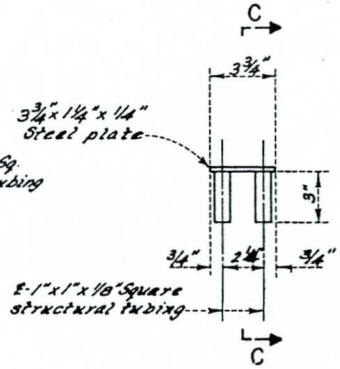

DETAIL OF POST CAP

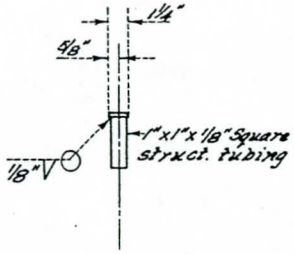

SECTION C-C

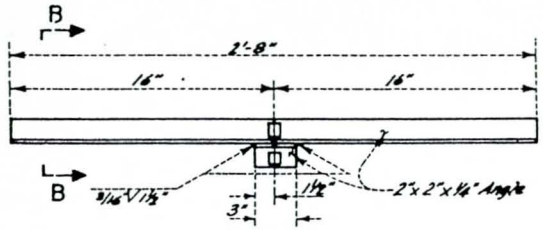

DETAIL OF END STAND

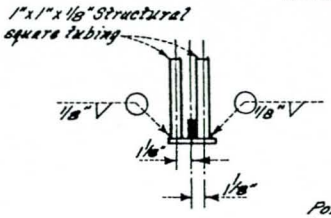

SECTION B-B

GENERAL NOTES

1. ALL CHAIN LINK FENCE MATERIALS SHALL CONFORM TO "STANDARD SPECIFICATIONS FOR PUBLIC WORKS CONSTRUCTION" SECTIONS 206-6 AND 206-7 UNLESS OTHERWISE SPECIFIED.
2. FABRIC SHALL BE TIED TO TOP AND BOTTOM RAILS & CENTER POSTS WITH 11 GA. WIRE AT MAX. 15" INTERVAL.
3. POST-RAIL JOINTS SHALL BE WELDED ALL AROUND WITH 1/8" FILLET WELD.
4. IN LIEU OF GALVANIZING, POSTS MAY BE PAINTED WITH A ZINC CHROMATE PRIMER COAT AND AN ALL-PURPOSE ALUMINUM FINISH COAT.
5. FENCE PANELS SHALL BE HOSED OFF WITH WATER WHEN NECESSARY TO REMOVE ACCUMULATED DIRT SO THAT A CLEAN APPEARANCE IS MAINTAINED AT ALL TIMES.
6. ⚠ SAND BAGS SHALL BE PLACED ON THE END STANDS TO INCREASE STABILITY WHEN OVERTURNING IS A PROBLEM, AS DETERMINED BY THE ENGINEER.

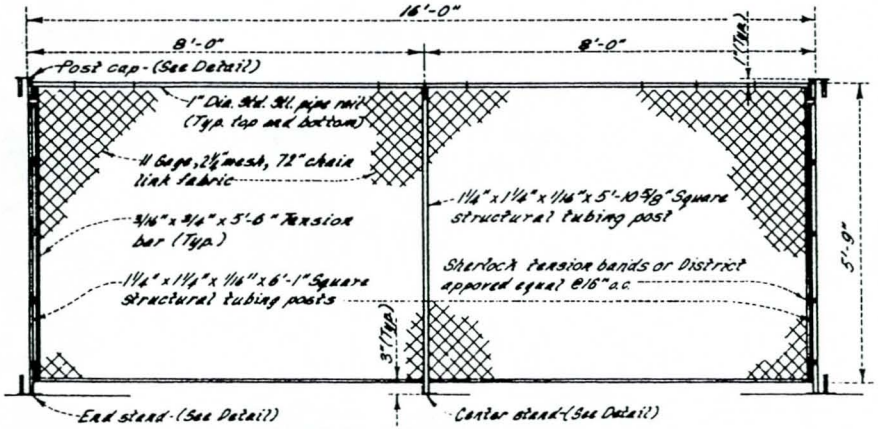

TYPICAL FENCE ELEVATION

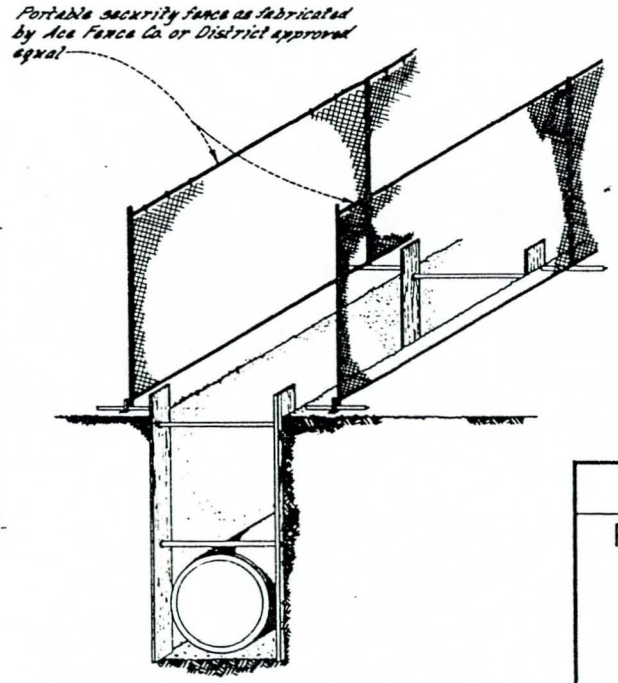

TYPICAL FIELD INSTALLATION

DRAWN BY	REVISIONS		
A. Trask	MARK	DATE	DESCRIPTION
CHECKED BY G. Pederson	⚠	4-1-74	Note 6 added
DESIGNED BY D. Greenwood			
SUBMITTED BY A. Smith			

LOS ANGELES COUNTY
FLOOD CONTROL DISTRICT

PORTABLE SECURITY FENCE FOR OPEN TRENCHES

RECOMMENDED BY D J Milne — DIVISION ENGINEER DESIGN

APPROVAL RECOMMENDED BY C Tibbetts — ASS'T CHIEF DEPUTY ENGINEER

APPROVED BY A E Bumgardner — 3-6-74 — ASSISTANT CHIEF ENGINEER NO. 8-26

SCALE	DATE	DWG. NO. 2-D476
NONE	3-1-74	SHEET 1 OF 1

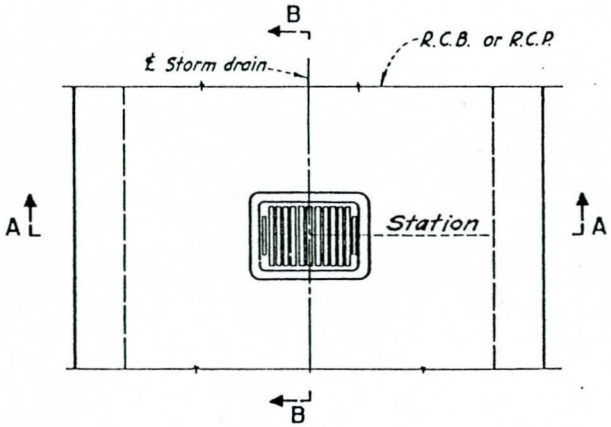

PLAN

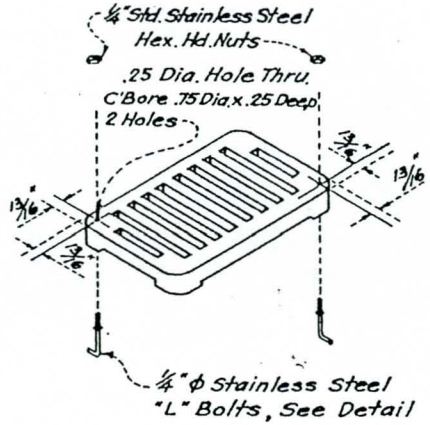

DETAIL A

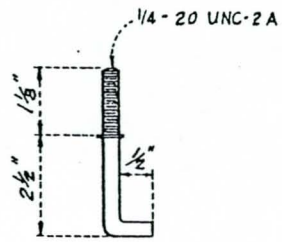

DETAIL OF "L" BOLT

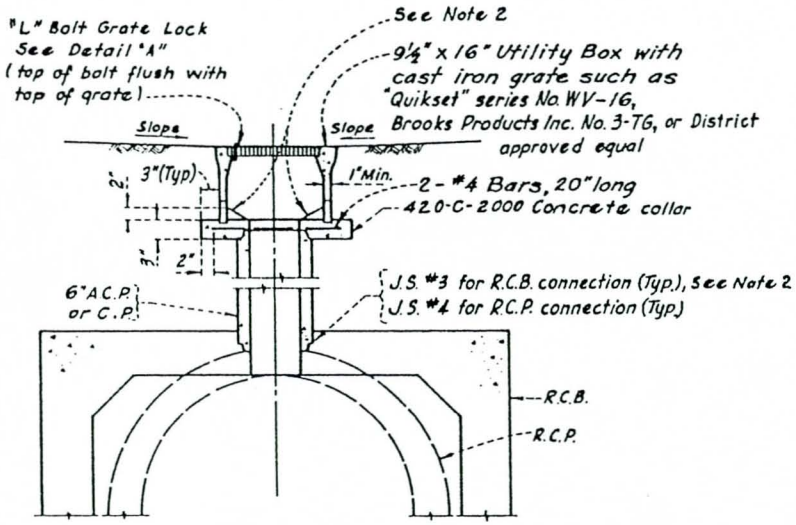

SECTION A—A

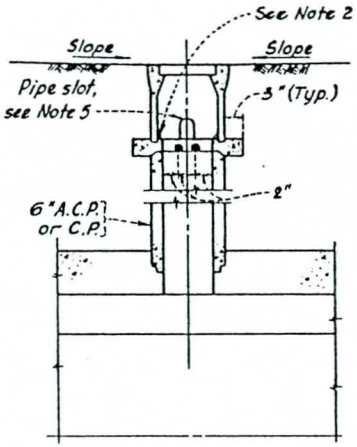

SECTION B—B

NOTES

1. CONNECTOR PIPE
   LOCATE PIPE AS INDICATED ON THIS DRAWING.
2. CONCRETE
   DESIGN f'_c = 3,000 psi COMPRESSIVE STRENGTH AT 28 DAYS.

   FLOOR OF BASIN SHALL SLOPE FROM ALL WALLS TO THE OUTLET AND SHALL BE GIVEN A STEEL-TROWELED SURFACE FINISH.

   3" THICK CONCRETE ENCASEMENT SHALL BE USED IN LIEU OF 6" THICK CONCRETE ENCASEMENT WHEN REQUIRED BY STD. DWG. NO. 2-D 191.
3. DIMENSIONS
   AS INDICATED ON THIS DRAWING.
4. GRATINGS
   ONE GRATING IS REQUIRED AS SHOWN.
5. GENERAL
   GRATING AND BASIN ARE NOT DESIGNED FOR VEHICULAR TRAFFIC AND MUST NOT BE USED IN LOCATIONS WHERE SUCH TRAFFIC WILL OCCUR.

   EMBED UTILITY BOX 1/2" INTO CONCRETE COLLAR. SEAL PIPE SLOTS IN UTILITY BOX WALLS WITH CONCRETE.

DRAWN BY	REVISIONS		
B Bartlett	MARK	DATE	DESCRIPTION
J. Stephenson			
CHECKED BY			
G Pederson			
DESIGNED BY			
A. Chan			
SUBMITTED BY			
R. Smith			

LOS ANGELES COUNTY
FLOOD CONTROL DISTRICT

YARD INLET

PLAN AND SECTION

RECOMMENDED BY — DIVISION ENGINEER (DESIGN)

APPROVAL RECOMMENDED BY — ASS'T CHIEF DEPUTY ENGINEER

APPROVED BY — CHIEF ENGINEER - CIVIL ENGINEER No. 8726 — 8-16-74

SCALE	DATE	DWG. NO. 2-D 479
None	8-15-74	SHEET 1 OF 1