URBAN DRAINAGE AND FLOOD CONTROL DISTRICT

Property of
Flood Control District of MC Library
Please Return to
2801 W. Durango
Phoenix, AZ 85009

TECHNICAL REVIEW GUIDELINES for GRAVEL MINING ACTIVITIES

Within or Adjacent to 100-year Floodplains

Prepared In Cooperation With:

Adams County
Colorado Rock Products Association

December 1987
Project Consultant: Wright Water Engineers, Inc.

116.005

TECHNICAL REVIEW GUIDELINES
FOR
GRAVEL MINING ACTIVITIES
Within or Adjacent to 100-Year Floodplains

December 1987

Urban Drainage & Flood Control District
2480 West 26th Avenue, Suite 156B
Denver, Colorado 80211
(303) 455-6277

Prepared in Cooperation with:

ADAMS COUNTY
COLORADO ROCK PRODUCTS ASSOCIATION
Project Consultant:
WRIGHT WATER ENGINEERS, INC.

TABLE OF CONTENTS

Chapter	Description	Page
1.0	INTRODUCTION	1-1
1.1	Title	1-1
1.2	Jurisdiction	1-1
1.3	Purpose	1-1
1.4	Enactment Authority	1-2
1.5	Definition of Terms and Abbreviations	1-2
2.0	OFF RIVER GRAVEL MINING	2-0
2.1	Types of River Alignment	2-1
2.2	Revegetation of Berms	2-5
2.3	Riverbank Protection	2-7
2.4	Pitside Bank Protection	2-13
2.5	Lateral Berms	2-23
2.6	Berm Top Widths - Riverbank Berms	2-28
2.7	Berm Top Width - Lateral Berms	2-30
2.8	Berm Top Widths - Summary Table	2-32
3.0	IN-RIVER GRAVEL MINING	3-1
3.1	Groundwater Impacts	3-2
3.2	Sediment Transport	3-2
3.3	Water Quality	3-2
3.4	Sideslope Protection	3-2
3.5	Headcutting Control	3-3
3.6	Upstream Protection	3-5
4.0	RECLAMATION	4-1
4.1	Recreational Criteria	4-1
4.2	Revegetation Criteria	4-2

LIST OF FIGURES

Figure	Description	Page
2.1	Typical Minimum Maintenance Alignment	2-4
2.2	Typical Riprap Slope Protection	2-9
2.3	Typical Riprap and Vegetation Slope Protection	2-11
2.4	Jetty Slope Protection	2-12
2.5	Typical Riprap Slope Protection	2-15
2.6	Typical Soil Cement Slope Protection	2-17
2.7	Typical Reinforced Riprap Core	2-19
2.8	Riprap Spillway Stabilization	2-22
2.9	Concrete Spillway Stabilization	2-24
2.10	Soil Cement Spillway Stabilization	2-25
3.1	Typical Instream Headcutting Control Structures	3-4

LIST OF TABLES

Table	Description	Page
2.1	Riverbank Berm Top Width	2-33
2.2	Lateral Berm Top Width	2-34

CHAPTER 1.0
INTRODUCTION

1.1 TITLE

These technical review guidelines together with all future amendments shall be known as "Technical Review Guidelines for Gravel Mining Activities Within or Adjacent to 100-year Floodplains" (hereafter called "Guidelines").

1.2 JURISDICTION

These Guidelines shall apply to all proposed gravel mining operations, or any other excavation below the normal water level of the 100-year floodplain, or within 500 feet of the low flow channel if outside the 100-year floodplain of the South Platte River and its tributaries within the Urban Drainage & Flood Control District (hereinafter called the "District").

1.3 PURPOSE

Presented in these Guidelines are the minimum requirements proposed for gravel mining operations located in or adjacent to 100-year floodplain within the District. It is the intent of these Guidelines to help protect property owners adjacent to rivers and streams from unreasonable hazard resulting from river or stream instabilities. These Guidelines were originally designed to protect South Platte River and related properties and infrastructure from adverse impacts resulting from the extraction of gravel in or near the river by providing guidelines for maintaining its stability and protecting overbank areas from catastrophic failure. As a result these Guidelines are directly applicable to operations along the South Platte River. However, they

should also provide initial guidance for operations along its tributaries, but may require modifications on a case-by-case basis to recognize differences in hydrology and site conditions. These Guidelines are also intended to provide a consistent bases for District review and action in matters dealing with gravel mining within or adjacent to 100-year floodplains.

1.4 ENACTMENT AUTHORITY

These Guidelines are adopted by the Urban Drainage & Flood Control District's Board of Directors as District's review guidelines. These Guidelines are not intended to supersede the Rules and Regulations for Mining Operations in the State of Colorado as adopted by the Colorado Mined Land Reclamation Board (34-32-108, CRS) but rather to supplement them. All referrals by all general purpose governments and special districts within the District will be reviewed using these Guidelines as the basis for comment and, if necessary, action before the Colorado Mined Lane Reclamation Board where existing or proposed mining activities threaten the long-term stability of the South Platte River.

1.5 DEFINITION OF TERMS AND ABBREVIATION

1.5.1 Definitions. As used in these Guidelines, the following definitions shall apply:

Adjacent	Within 400 feet when used in reference to the South Platte River. The 400 foot distance shall be measured from the top of the river bank to the top of the gravel pit bank or from the Master Plan alignment boundary to the top of the gravel pit bank, whichever is greater.

Berms	Areas of native material or fill material separating a river or stream from the overbank gravel pits or one overbank gravel pit from another overbank gravel pit.
County	A county totally or partially within District's boundaries.
District	Urban Drainage & Flood Control District
FHAD	A Flood Hazard Area Delineation report prepared by District.
Floodplain	Land adjacent to a watercourse which is subject to flooding as a result of the occurrence of the 100-year or 1 percent frequency flood of a watercourse.
Flood Profile	A graph or a longitudinal profile showing the relationship of the water surface elevation of a flood event to location along a stream or river.
Floodway	That area of the floodplain required for a reasonable passage or conveyance of the 100-year flood and which will convey the flood flows with not more than 0.5 foot rise in the water surface elevation based on the assumption that there will be an equal degree of encroachment onto the overbank conveyances on both sides of the floodplain.

Guidelines	Technical Review Guidelines for gravel mining activities within or adjacent to 100-year floodplains.
Guidelines for Vegetation	Godi, Donald H., and Associates, "Guidelines for Development and Maintenance of Natural Vegetation" for Urban Drainage & Flood Control District, Denver, Colorado, July, 1984.
High Water Line	The elevation used to determine the volume of overbank gravel pits. The high water line elevation shall be the spillway elevation when only one spillway is used or the average of both spillways when two are used.
Hydraulic Radius	The area of flow divided by the length of the section exposed to water.
Instream Mining	Mines located in the channel of the South Platte River or any of its tributaries, or gravel mines which were originally out of the channel if it is proposed to relocate the river or stream through those gravel mines in the future.
Interior Banks	Banks which face the interior portion of gravel pits.
Invert	The lowest point in the river or stream channel.

Jetties (Groins)	Bank stabilization technique involving the placement of strips of stabilized fill projecting into the river channel from the banks.
Lateral Berms	Berms constructed or left in place between pits which are perpendicular to the general direction of flow of a river or a stream.
Local Government	Any general purpose government or a special district totally or partially within District boundaries.
Low Flow Channel	That portion of the channel which is subjected to continuous flow or frequent flows and where the flows are concentrated.
Master Plan	The South Platte River Major Drainageway Planning from Chatfield Dam to Baseline Road Phase B report prepared in June of 1985 or any other Major Drainageway Plan prepared by the District.
Pitside Banks	The interior bank of a gravel pit located adjacent to a river or a stream.
Reach	A hydraulic engineering term to describe longitudinal segments of a stream or river.

Riprap	Broken stone or boulders placed compactly or irregularly on earth or gravel surfaces to protect against the erosive action of water.
River Banks	The banks of a river or a stream.
Riverside Berms	Berms immediately adjacent to a river or a stream (see berms).
Rubble	Inert materials such as concrete blocks, broken concrete, or concrete pavement with a specific gravity of 2.3 or greater which can be used in lieu of rock riprap for erosion protection.
Safety Factor	The ratio of forces resisting movement to those attempting to initiate movement. (abbreviated SF).
Setback	The distance between any property line and the wall or support of structure. Setbacks are not applicable to fences except where specifically indicated.
Thalweg	The lowest portion of a river or a stream channel.
Urban Storm Drainage Criteria Manual	(Abbreviated USDCM) The latest version of the Criteria of the Urban Drainage and Flood Control District.

1.5.2 Abbreviations

As used in these Guidelines, the following abbreviations shall apply:

A_p	Area of gravel pit at the high water line, in square feet.
B	Bottom width of channel, in feet.
D_{50}	Median riprap particle size, in feet.
INV	River or stream invert (i.e., thalweg).
L	Length of the channel crossing between two curves, in feet.
L_H	Horizontal spacing between jetties, in feet.
L_m	Meander length of two consecutive bends and crossings, in feet.
L_s	Length of side channel spillway crest, in feet.
L_{s1}	Length of lateral berm spillway, in feet.
Min	Minimum
n	Stability Factor
NWL	Normal water level

R	Hydraulic radius at normal depth of flow down pitside slope, in feet.
R_H	Horizontal radius of the channel centerline, in feet.
S	Face slope of pitside bank, in feet per foot.
SF	Safety factor
SPR	South Platte River
S_s	Specific gravity of riprap particles.
USDCM	Urban Storm Drainage Criteria Manual.
W.S.	Water surface
	Specific weight of water (equal to 62.4 lbs/ft^3).
	Deflection angle of the horizontal curve, in degrees.
	Face slope of pitside bank, in degrees.
s	Tractive force, in lbs/ft^2.
Ø	Angle of repose of pitside bank construction materials, in degrees.

CHAPTER 2.0

OFF RIVER GRAVEL MINING

2.1 TYPES OF RIVER ALIGNMENT

The centerline alignment of the South Platte River, and possibly its tributaries affects stability. This section describes three classifications of river alignment and how each affects the stability of the South Platte River. This description may or may not apply to tributary streams.

2.1.1 Existing Unstable Alignment

The alignment of the South Platte River through Adams County in 1985 is considered unstable. Studies of aerial photos taken since 1937 clearly show the river continuously shifting its main channel horizontally, sometimes as much as 1,700 feet. In more recent years, the river also has exhibited a tendency to lower its thalweg through degradation. As it exists today, the river channel is considered unstable and capable of significant lateral and vertical movement.

As a minimum, if the gravel mining operator elects to preserve the river in its current unstable alignment, the river banks shall be regraded to have a 3H:1V side slope and then revegetated per section 2.2 of these Criteria. Sufficient river channel width must be provided to convey the 100-year flood to 88th Avenue and the 10-year flood downstream of 88th Avenue as described in the Master Plan. It is the intent to provide this capacity by natural erosion phenomena or excavation, if necessary.

2.1.2 Master Plan Alignment

The alignment shown in the South Platte River Phase B Master Plan, prepared by Wright Water Engineers for the Urban Drainage

& Flood Control District in 1985, is a special case. It is a combination of a minimum maintenance alignment and more heavily protected channel that in some reaches differs from the minimum maintenance alignment requirements. The Master Plan alignment was developed in order to satisfy many constraints including: (1) the minimum maintenance alignment requirements, (2) property boundaries, (3) location of the existing river, and (4) proposed improvements by the County and gravel operators. The Phase B Master Plan clearly defines the horizontal alignment of the channel, the required invert profile of the channel in its ultimate configuration and methods of bank protection proposed along the entire river. This alignment can be changed if it is technically demonstrated that the change is consistent with the intent of the Master Plan as approved by the District.

2.1.3 Minimum Maintenance Alignment

This alignment is intended to be used only when the operator can demonstrate that a change will benefit the extraction operation and still comply with the intent of the Master Plan alignment.

Studies by the District have resulted in a recommended river alignment that is expected to require significantly less maintenance to retain the river's lateral stability. The configuration of the channel cross section and geometric properties of "minimum maintenance alignment" channel are illustrated on Figure 2.1 and have the following characteristics:

R_H = 400 to 1,500 feet

Δ = R/60 + 50°

B = 250 feet

L = 300 to 700 feet

L_m/B = 7 to 15

In which,

R_H = horizontal radius of the channel centerline in feet.

Δ = deflection angle of the horizontal curve in degrees. (a tolerance of $\pm 10'$ is acceptable.)

B = bottom width of the channel in feet.

L = length of the channel crossing between two curves in feet.

L_m = meander length of two consecutive bends and crossings in feet.

The banks of the minimum maintenance alignment channel should be sloped back at a ratio of no less than 4 horizontal to 1 vertical (4H:1V) except where riprap or riprap with vegetation is used. In the riprap sections, the banks will be no steeper than 2.5H:1V. Riprap or riprap with vegetation shall be used to protect the banks on the outside of bends and shall be continued into the downstream crossing for a distance of 450 feet as shown on Figure 2.1. Riprap with vegetation may be substituted for riprap alone, but may be required by District or the County in aesthetically sensitive areas or where wildlife habitat reestablishment is considered important.

Vegetation only may be used in areas where, due to hydraulic conditions, riprap is not required. In the portions of channel not requiring riprap bank protection as specified above, vegetation by itself may be used to protect banks above the 2-year flood. Below the 2-year flood level, riprap or riprap with vegetation shall be used.

An armor layer shall be provided at each crossing between channel bends. The armoring layer shall be no less than 18 inches

FIG. 2.1

TYPICAL MINIMUM MAINTENANCE ALIGNMENT

1" = 500'

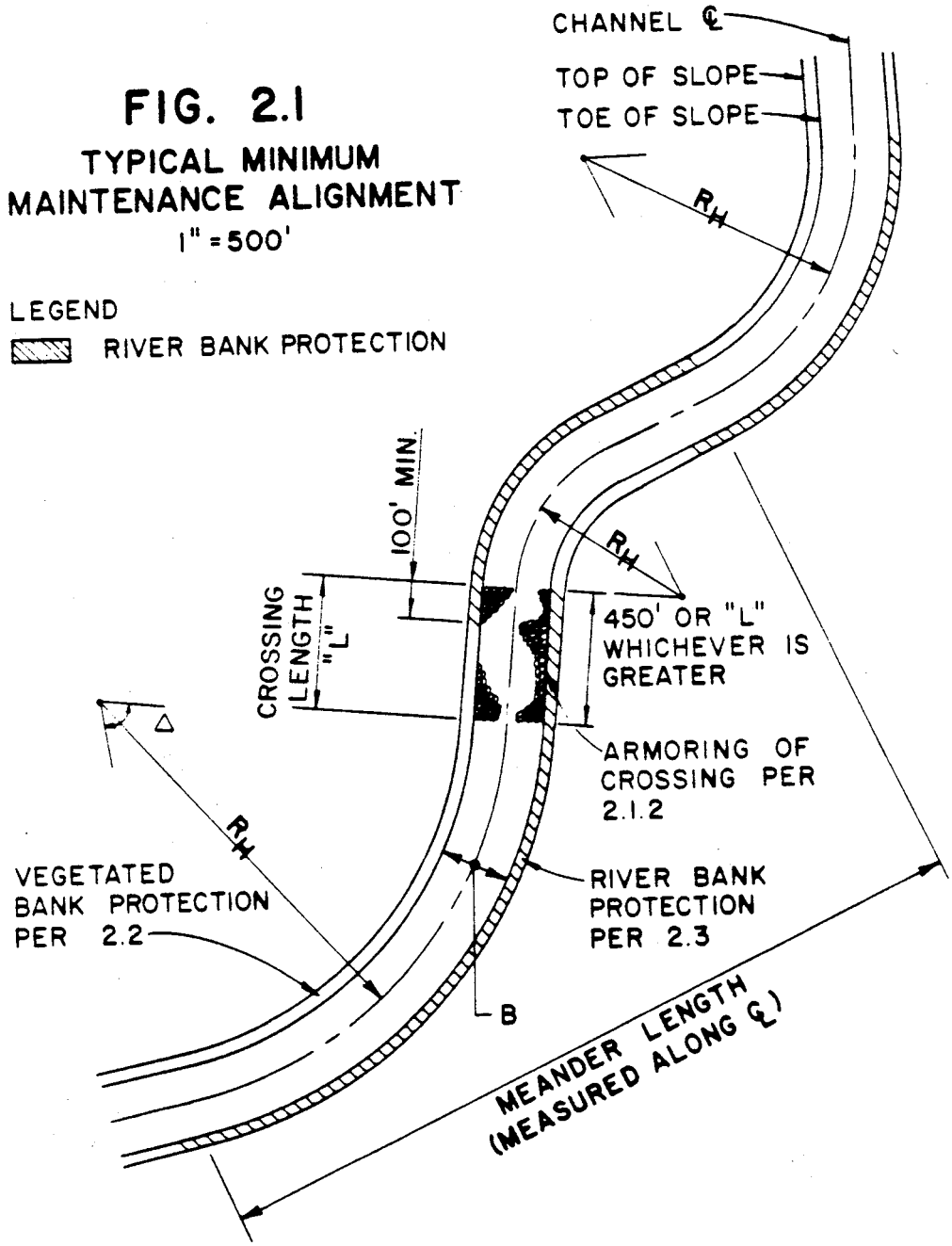

WRIGHT WATER ENGINEERS, INC.

thick to protect the river profile from degrading and shall consist of Type L or larger riprap as defined in the USDCM, or a gradation of cobble equivalent to Type L riprap.

The minimum maintenance alignment channel is designed to control the 10-year flood. However, all berms will be designed to withstand the 100-year flood without failure during overtopping. If a 100-year berm is requested by the Adams County Engineer, then the higher standard shall supersede the recommended standard, and all design shall conform accordingly. If the operator chooses to elevate the unprotected riverside berm above the 10-year level, the berm shall be protected in a manner consistent with the protection requirements for a minimum maintenance channel alignment for the entire height of the berm.

2.2 REVEGETATION OF BERMS

All berms shall be revegetated with native type grasses and vegetation to control soil erosion, to improve aesthetics and to provide habitats for birds and small animals. Revegetation shall be required on all surfaces of the berms that are not protected using the techniques described in Sections 2.3.1 - Riprap, 2.3.2 - Riprap with Vegetation, 2.4.1 - Riprap, 2.4.2 - Riprap with Vegetation and 2.4.3 - Soil Cement.

Revegetation shall occur as soon after the construction of the berms as possible. The revegetation shall take place in accordance with the requirements of the District as specified in the Guidelines for Vegetation.

2.2.1 Revegetation of River Banks

Revegetation of all river banks not otherwise protected using techniques described in Sections 2.3.1 - Riprap and 2.3.2 - Riprap with Vegetation shall be performed in accordance with the guidelines contained in "Guidelines for Development and Maintenance of Natural Vegetation" hereafter called Guidelines for Vegetation published by the District in 1984. This document contains guidelines for site preparation, selection of grass species, landscape plantings, seed bed preparation, seeding, mulching, fertilizing, irrigation for establishment of vegetation and follow-up maintenance. All vegetated slopes not incorporating riprap should be constructed no steeper than 4H:1V.

2.2.2 Revegetation of Pitside Banks and Top of Berm

Revegetation of pitside banks and tops of berms not otherwise protected with riprap or soil cement shall be done in accordance with the Guidelines for Vegetation (see Section 2.2.1 - Revegetation of Riverbank Berms) and the minimum requirements of the Colorado Mined Land Reclamation Division for reclamation of gravel mines. The allowable slope should be no steeper than 4H:1V.

2.2.3 Revegetation of Riprap With Vegetation Areas

In areas to be protected using the riprap with vegetation technique as described in 2.3.2 - Riprap with Vegetation, it is important that soil fill the voids between the rocks completely. The placement of the rock, soil, and topsoil mixture shall be in accordance with the requirements of Section 2.3.2 - Riprap with Vegetation. Live willow slash shall be mixed into

the upper layers of the soil-rock mixture to encourage growth of pioneer shrub-type vegetation. The seed bed preparation and all other steps needed to establish a healthy native grass cover shall be performed in accordance with the Guidelines for Vegetation unless specifically modified in this document. The steepest allowable slope shall be 2.5H:1V.

The placement of vegetation on channel banks, with or without riprap, shall be limited to the area above the 2-year water surface elevation only. Below this elevation riprap will be required.

2.3 RIVERBANK PROTECTION

In areas where the water currents in the river will have a tendency to erode the river banks, it is necessary to provide additional bank protection over what is provided simply by bank vegetation. The next three subsections provide the criteria for the design and installation of three types of allowable bank protection for the South Platte River in Adams County. This type of protection is required for the protected areas of the existing channel alignment conditions and for the areas defined under Sections 2.1.2 - Master Plan Alignment and 2.1.3 - Minimum Maintenance Alignment for the minimum maintenance alignment river channel configurations.

Riverbank protection must be provided at the time that mining occurs adjacent (within 400 feet) to the river channel. It will not be necessary for gravel mining operators to complete improvements on the entire reach along their permit boundary prior to the commencement of mining activities unless the areas are experiencing ongoing bank erosion as determined by the Adams County Engineer or District. However, the portions to be stabilized shall precede the commencement of mining activities along any portion adjacent (within 400 feet) of the river.

2.3.1 Riprap

Riprap along riverbanks shall be designed in accordance with the provision of the USDCM except that the banks along the rivers and streams protected with riprap or riprap with vegetation are to be sloped at no steeper than 2.5H:1V up to the 2-year flood level and 4H:1V above the 2-year flood level. All riprap sizing is to be based on the velocities associated with the 100-year event. The rock will be extended vertically downward beyond the toe of the slope at least 5 feet below the channel thalweg (Phase B Master Plan low flow channel bottom). All type VL and L riprap shall be buried and revegetated as required by the USDCM. Larger rock may be buried at the discretion of the owner. If rock is to be buried, the provisions of Sections 2.3.2 - Riprap with Vegetation shall be followed. Typical rock and bedding placement details are illustrated on Figure 2.2.

2.3.2 Riprap with Vegetation

Rock used in conjunction with vegetation shall be sized in accordance with the requirements of the USDCM. The velocities associated with the 100-year flood are to be used for determining rock sizes. The sizing of riprap shall be in accordance with Section 2.3.1 - Riprap.

Soil, seed and rock shall be mixed into one homogeneous mixture with all voids filled. Seed mixtures used in this mass are to conform with the Guidelines for Vegetation; however, they should also include dormant willow slash to encourage the growth of willow shrubbery in addition to native grasses as required. Willow slash shall be included at a rate of 20 pounds of dormant willow slash per 100 pounds of live seed of grass mixture. The combination of seed, willow slash, soil,

FIG. 2.2
TYPICAL RIPRAP SLOPE PROTECTION
(MINIMUM MAINTENANCE ALIGNMENT)

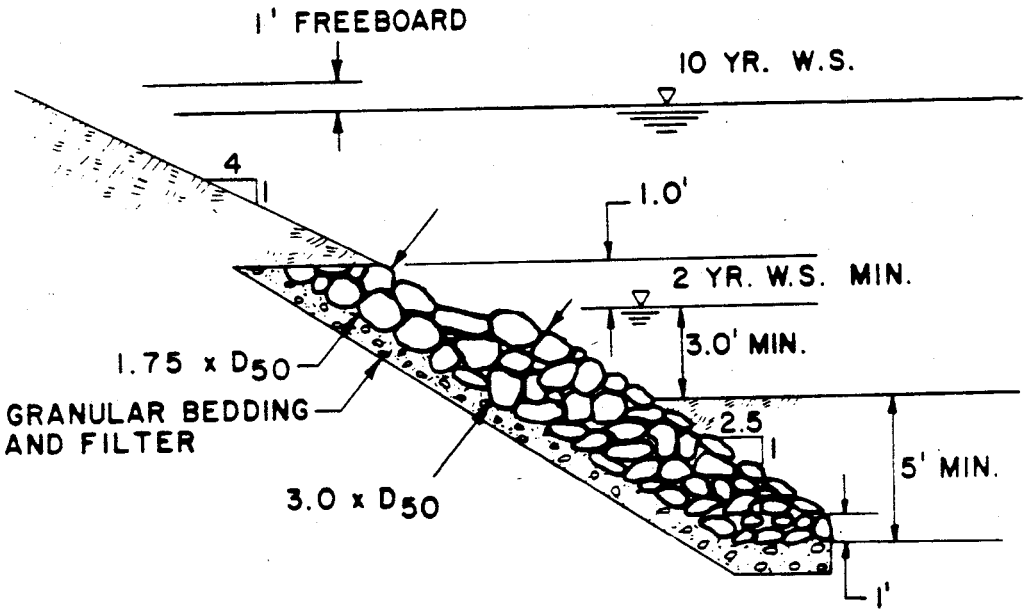

WRIGHT WATER ENGINEERS, INC.

and riprap shall be mixed as needed to provide a homogeneous mass and in a separate operation, transported and placed on the slope to be revegetated. Mixing shall be accomplished using mechanical equipment such as dozers, loaders or backhoes, or by batch mixing using equipment designed specifically for such an operation.

Placement of the mass shall be accomplished in a manner to assure that no segregation of the various constituents occurs. No bedding will be allowed under riprap with vegetation. Subsequent to the placement of the mass, a 6-inch to 12-inch layer of topsoil will be placed above the rock. A typical detail of this installation is shown in Figure 2.3.

2.3.3 Jetties (Groins)

Jetties may be used to protect river banks when the river is in its existing, unstable alignment. The jetties must be installed in such a manner that they not only control river flows during normal and minor flood events, but also protect against embankment erosion during larger events.

The geometric characteristics will conform to those shown on Figure 2.4. The jetties will project from the toe of the channel bank a minimum of 15 feet and a maximum of 25 feet. This distance will be measured from the toe of the bank normal slope (after regrading to 4H:1V) where it intersects the channel invert. The spacing of jetties shall be such that the ratio of centerline spacing to projection is less than or equal to 3. All jetties will extend into the bank a minimum of 15 feet as measured from the toe of the bank slope. Jetties will be constructed perpendicular to the centerline of the channel or with an orientation in the downstream direction of up to 45 degrees.

FIG. 2.3

TYPICAL RIPRAP AND VEGETATION SLOPE PROTECTION

(MINIMUM MAINTENACE ALIGNMENT)

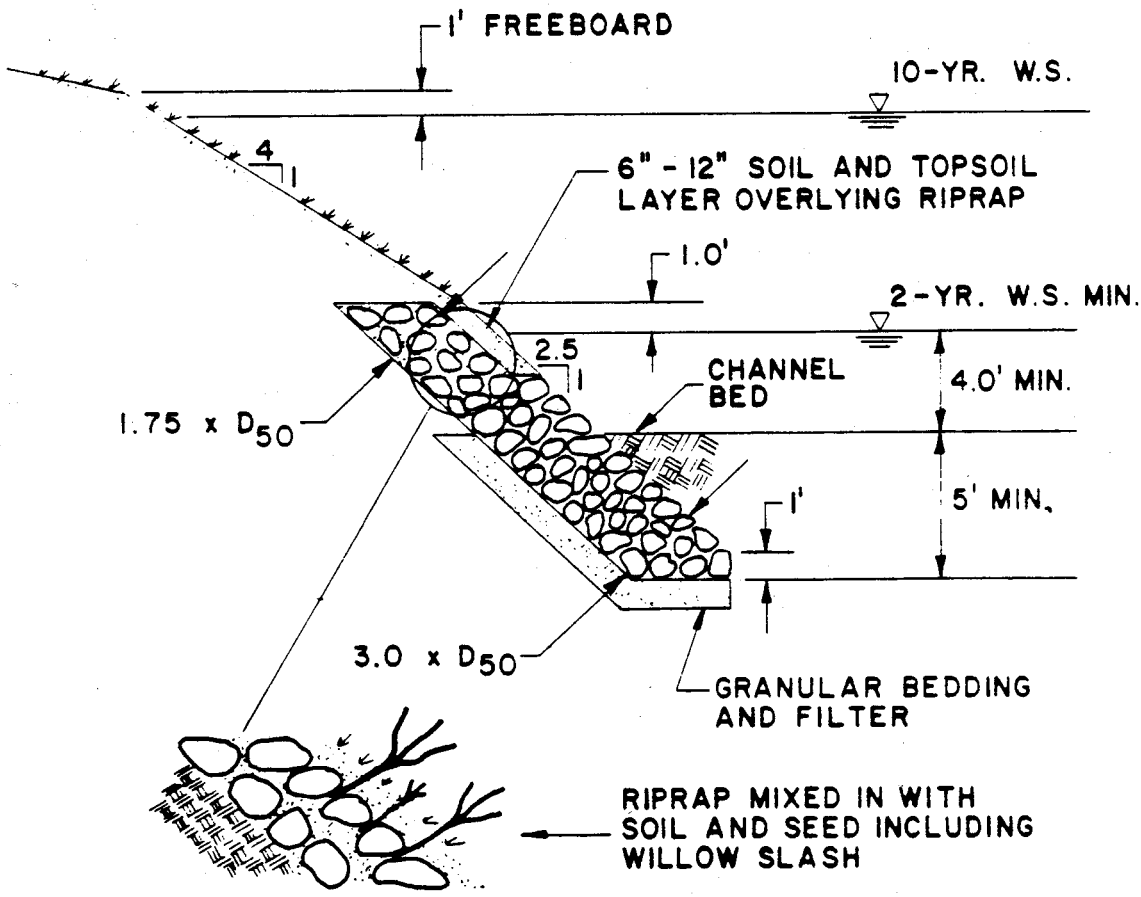

WRIGHT WATER ENGINEERS, INC.

FIG. 2.4
JETTY SLOPE PROTECTION

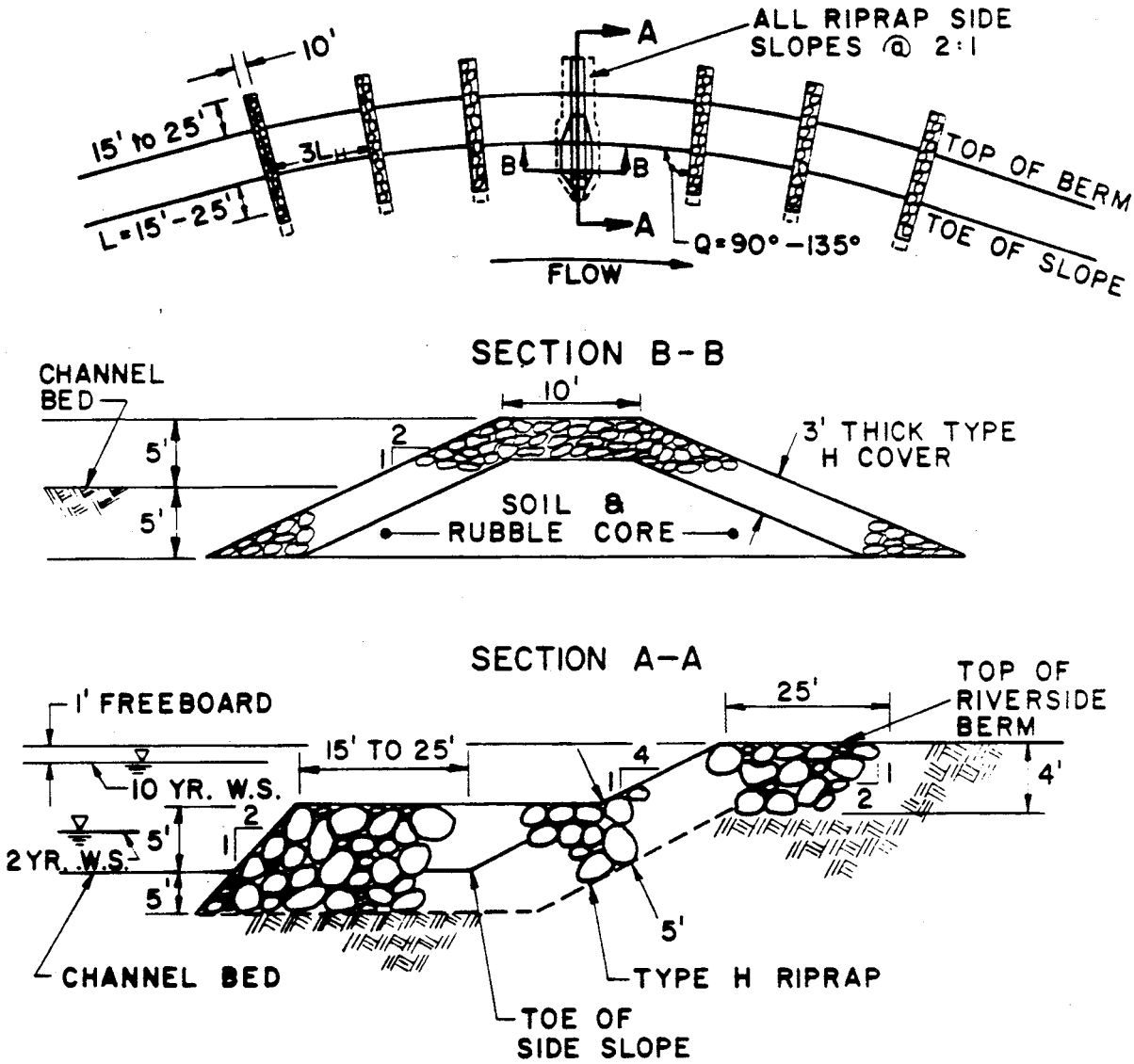

WRIGHT WATER ENGINEERS, INC.

All jetties will be constructed of Type H riprap (USDCM classification) and toed into the existing riverbed a minimum of 5 feet. The core of the jetties may be constructed from a mixture of concrete rubble with no exposed rebar and soils. However, the surface of the jetty must be Type H rock. Banks between jetties are to be revegetated in accordance with the requirements of Section 2.2.1 - Revegetation of River Banks.

2.4 PITSIDE BANK PROTECTION

The interior banks of reclaimed gravel pits require additional erosion protection beyond revegetation if the berm is to be protected from loss during large flood events. Protection of the pitside banks permits the reduction of top width of the berm provided it is accomplished using the requirements specified in the next five subsections.

Construction of the pitside bank protection will occur coincidentally with the construction of river bank erosion protection measures. That is, when mining activities abut against a river or stream, erosion protection of both the river bank and the pitside bank must be undertaken. In areas experiencing ongoing bank erosion as determined by District, it may be necessary to provide river bank protection prior to the commencement of mining operations, however, it will not be necessary to construct pitside bank protection measures until such time as gravel extraction is completed.

2.4.1 Riprap

When riprap is used to stabilize the pitside slope, the rock shall be placed at a slope no steeper than 2.5H:1V. Riprap sizing will be in accordance with the safety factor method. The minimum safety factor shall be 1.25.

$$SF = \frac{\cos \Theta \tan \phi}{n \tan \phi + \sin \Theta}$$

$$n = \frac{21}{(S_s - 1)} \frac{\tau_s}{D_{50}}$$

$$\tau_s = \gamma R S$$

In which,

Θ	=	face slope of pitside bank, in degrees
ϕ	=	angle of repose of pitside bank construction materials in degrees
S_s	=	specific gravity of riprap particles
γ	=	specific weight of water = 62.4 lbs/ft^3
D_{50}	=	median riprap particle size, in feet
R	=	hydraulic radius at normal depth of flow down pitside slope, in feet
S	=	face slope of pitside bank, in feet per foot
SF	=	Safety factor
τ_s	=	Tractive force

Once the D_{50} is established using the above described procedure, a gradation is to be selected. The gradation shall follow the general provisions specified in the USDCM. Material shall be placed in accordance with the criteria specified in the USDCM and as shown on Figure 2.5.

2.4.2 Riprap with Vegetation

The methodology presented in Section 2.4.1 - Riprap shall be used for sizing riprap when used in conjunction with vegetation on pitside banks. When riprap with vegetation is to be used to stabilize the pitside bank of riverside berms, the placement shall be in accordance with the requirements presented in Section 2.3.2 - Riprap with Vegetation.

FIG. 2.5
TYPICAL RIPRAP SLOPE PROTECTION
(PITSIDE SLOPE)

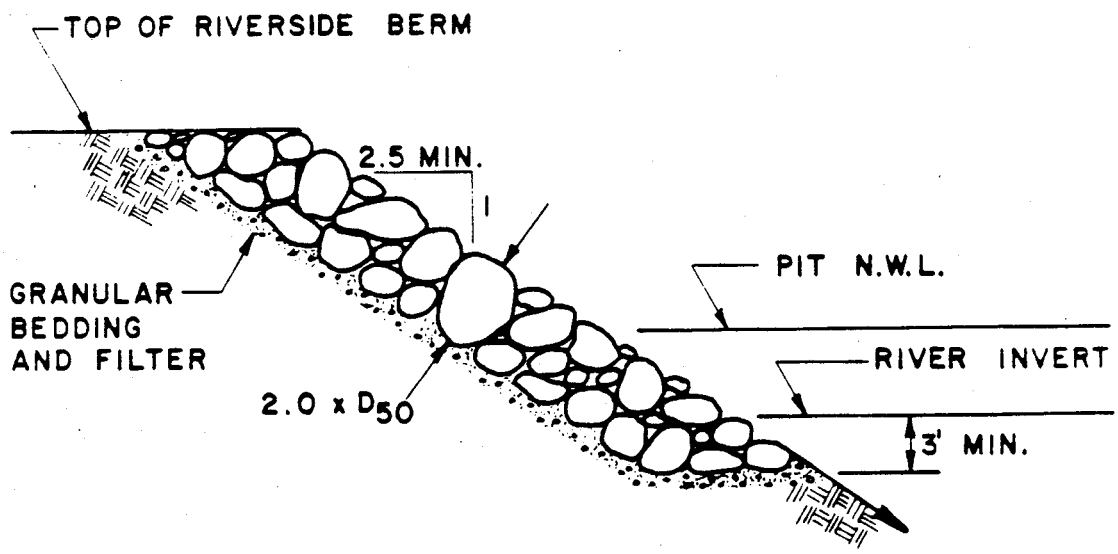

WRIGHT WATER ENGINEERS, INC.

2.4.3 Soil Cement

Soil cement may be used to stabilize the pitside slopes of riverside berms against erosion during overtopping. The soil cement must be placed on the pitside slope face in maximum 8-inch lifts at a width of 6 to 8 feet. The general geometric configuration of the soil cement stabilization will conform to the requirements as shown on Figure 2.6.

Soil cement will consist of a mixture of Portland cement, native soils (if conforming to gradation limitations) and water. Native soils may be used if they conform to the following three requirements: (1) the soil contains no material retained on a 2-inch sieve; (2) at least 55 percent of the material passes the No. 4 sieve; and (3) between 5 percent and 35 percent of the material pass the No. 200 sieve. The soil cement mixture should have a minimum of 10 percent Type 2 Portland cement as measured by weight. The moisture content of the soil should range between 10 and 15 percent. In order to determine the proper cement content, optimum moisture content and maximum density of the soil cement mixture, standard laboratory tests must be performed. These test are: ASTM D558, D559 and D560.

Mixing of the soil and cement may be accomplished at the site with mechanical means such as dozers, loaders, etc. or with mechanical batch mixing equipment specifically designed for the preparation of soil cement mixtures. Placement of the mixed and moistened soil cement mixture may be accomplished by standard construction means. Compaction will be accomplished with normal embankment compaction equipment which shall include sheepsfoot roller compaction in order to minimize weaknesses at the interface between successive lifts of soil cement.

FIG. 2.6

TYPICAL SOIL CEMENT SLOPE PROTECTION

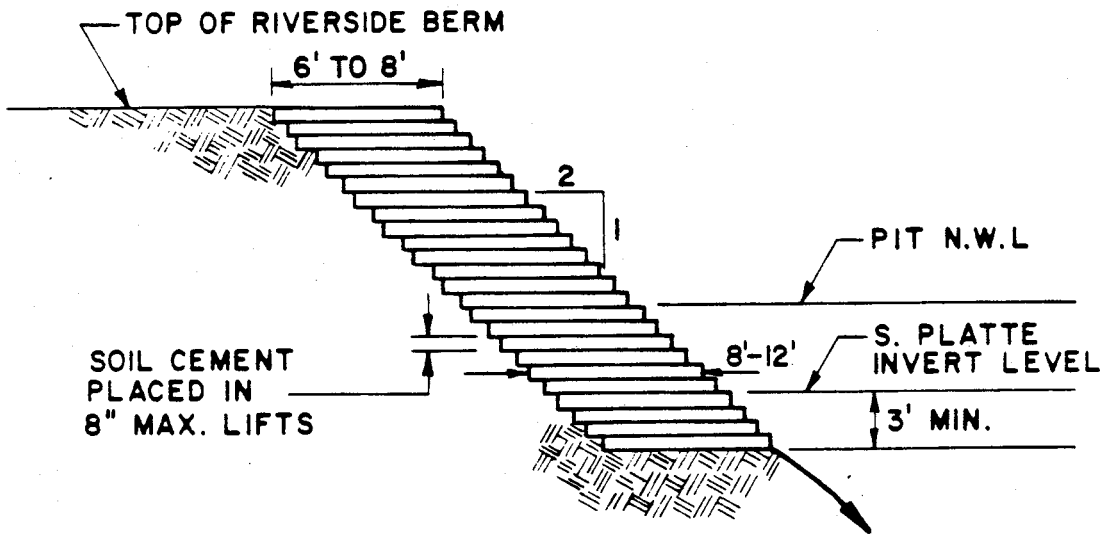

WRIGHT WATER ENGINEERS, INC.

2.4.4 Reinforced Core

A reinforced core may be used to stabilize the pitside slope of riverside berms against erosion from overtopping. The geometric configuration of the reinforced core should conform to the requirements indicated on Figure 2.7. The reinforced core will be made out of large riprap (Type VH or larger as defined in the USDCM or large rubble) with a 5 foot thick layer of material on the pitside face grouted. Soil cement or some other material approved by the District may be used as a core reinforcement in lieu of riprap. The core will be placed within the berm no more than 25 feet from the top of the pitside slope.

2.4.5 Side Channel Spillway

Side channel spillways may be provided between the river and the pit in order to minimize the potential for failure of the riverside berms. The stabilized spillway allows water to pass between the river and the pit. A spillway on the upstream end of the pit and one at the downstream end of the pit will be required unless the pit is small, in which case one spillway will be sufficient. Side channel spillways prevent the build-up of large differential heads between the river and water in the pit.

Because of the nature of the hydraulic response of the spillways, the differential head cannot be completely eliminated. The objective is to minimize, to the extent possible, the differential head between water in the river and water in the pit when the riverside berms overtop.

FIG. 2.7

TYPICAL REINFORCED RIPRAP CORE

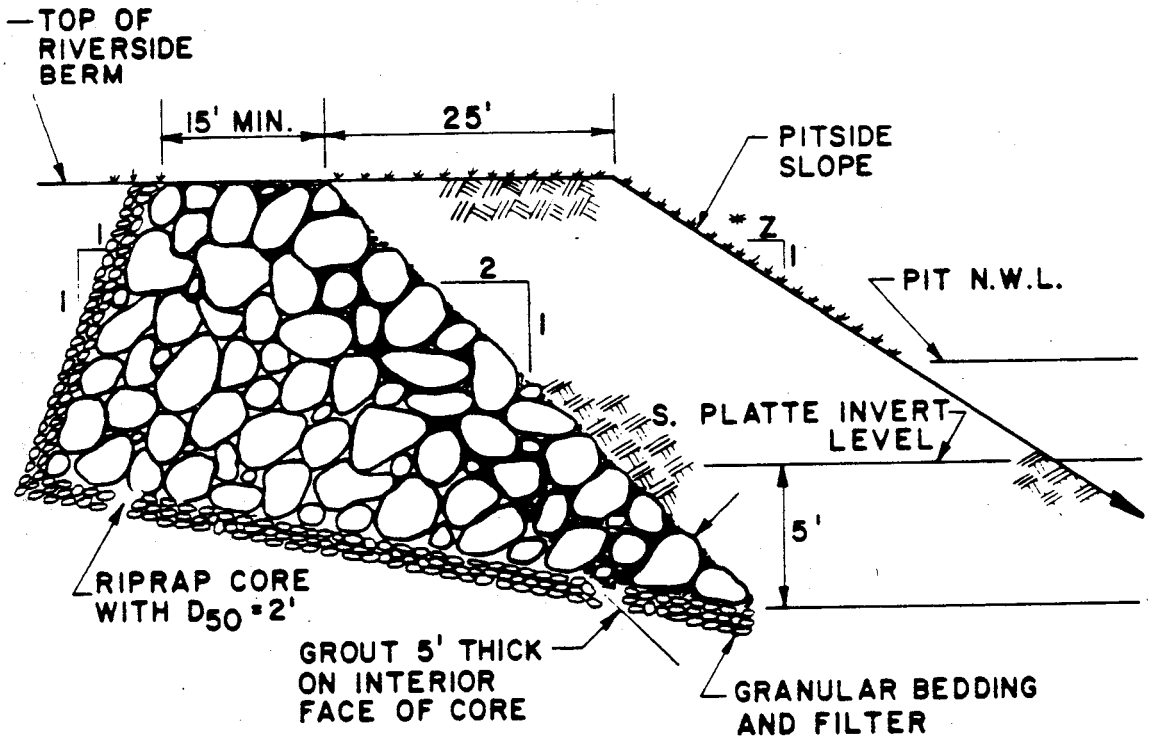

* Z VARIES WITH RECLAIMED USE

WRIGHT WATER ENGINEERS, INC.

The elevation of the spillway crest shall be approximately 1 foot above the 2-year flood elevation. This is approximately 5 feet above the channel invert for the Master Plan cross section for South Platte River.

When the riverside berm length of the gravel pit, is less than 1,300 feet, only one side channel spillway will be required, and it shall be located approximately in the midpoint of the berm. If the length of the berm is greater than 1,300 feet, two spillways will be required and will be located along the berm approximately one-fourth of the berm length from the upstream and downstream ends of the berm.

When the length of the berm is less than 1,300 feet the spillway bottom length shall conform to the following geometric relationship:

$$L_s = A_p/12{,}000$$

or

$$L_s = 100 \text{ feet whichever is greater.}$$

In which

L_s = length of the side channel spillway

A_p = area of pit measured in square feet at the high water line

When the length of the riverside berm is greater than 1,300 feet, two spillways shall be constructed and the bottom length of each spillway shall conform to the following relationship:

$$L_s = 0.6\ A_p/12{,}000$$

or

$$L_s = 100 \text{ feet whichever is greater}$$

In which

L_s = length of side channel spillway crest

A_p = area of pit measured in square feet at the high water line

Riprap with the grouted riprap rundown on the pit sideslope may be used to stabilize the spillways. Construction of this type of spillway stabilization must conform to the requirements indicated in Figure 2.8. The river bank should be stabilized in accordance with the requirements of Section 2.3 - Riverbank Protection. The crest of the spillway will be vegetated and shall have a 10-foot wide stabilized maintenance access trail along the entire length of the spillway. The objective is to provide a smooth flat driving surface with the ramps between top of berm and spillway bottom being no steeper than 10 percent. Access ramps, if sloped different than the side slopes of the spillway shall not protrude into the bottom width of the spillway. The pitside rundown slope will be protected using Type GM grouted riprap. Grout used for the grouted riprap portion of this structure shall have a minimum compressive strength of 2,000 psi. A concrete mix having 3/4-inch maximum aggregate, 4-inch slump and 2,000 psi - 28 day compressive strength may be substituted for grout. The grout shall be placed in a manner which ensures that all voids within the entire riprap mass are filled with grout.

Concrete may be used to protect spillways through riverside banks. The design of the concrete shall include consideration of all forces which may be encountered including, but not limited to, uplift forces and pore pressures generated by underlying materials. The river banks shall be protected in accordance with the requirements of Section 2.3 - Riverbank

FIG. 2.8
RIPRAP SPILLWAY STABILIZATION

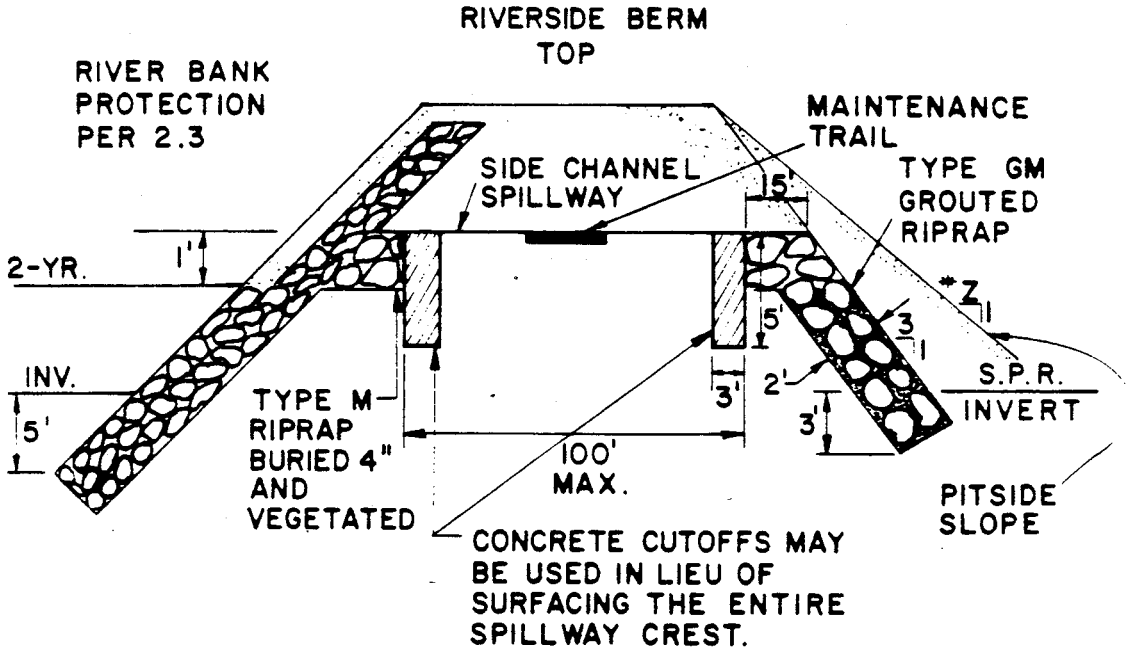

* Z VARIES WITH RECLAIMED USE

WRIGHT WATER ENGINEERS, INC.

Protection. The crest of the spillway and the downstream rundown will be protected using concrete. The geometric configuration of the concrete used to protect the spillway should conform to the dimensions shown on Figure 2.9.

Soil cement is also an acceptable form of protection for side channel spillways. The river banks should be protected in accordance with the requirements of Section 2.3 - Riverbank Protection. The crest of the riverside berm will be protected with a layer of riprap and vegetation. The layer of soil cement on the spillway crest must be a minimum of 2 feet thick. The pitside slope is to be protected with soil cement placed in horizontal layers not exceeding 8 inches in thickness and between 8 and 12 feet wide. The soil cement should conform to the requirements of Section 2.4.3 - Soil Cement. The geometric configuration of soil cement for stabilizing side channel spillways should conform to the dimensions shown on Figure 2.10.

2.5 LATERAL BERMS

Lateral berms are berms constructed, or left in place, between pits and are perpendicular to the general direction of flow of the South Platte River. These lateral berms separate gravel mining pits from one another. Lateral berms may be overtopped during major floods. When overtopped, the berms are subject to erosion due to the relatively high velocity flow and, in time, may fail resulting in a rapid release of water. This phenomenon can propagate in the downstream direction potentially increasing with each successive failure. By protecting lateral berms from catastrophic failure the likelihood of such downstream propagation can be significantly decreased.

FIG. 2.9

CONCRETE SPILLWAY STABILIZATION

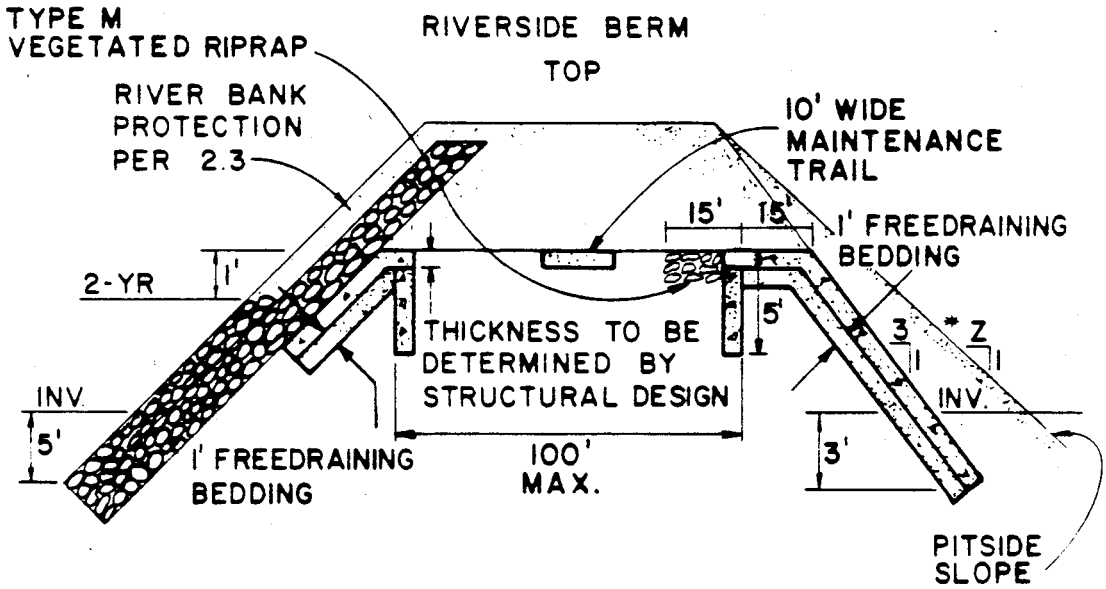

* Z VARIES WITH RECLAIMED USE

WRIGHT WATER ENGINEERS, INC.

FIG. 2.10

SOIL CEMENT SPILLWAY STABILIZATION

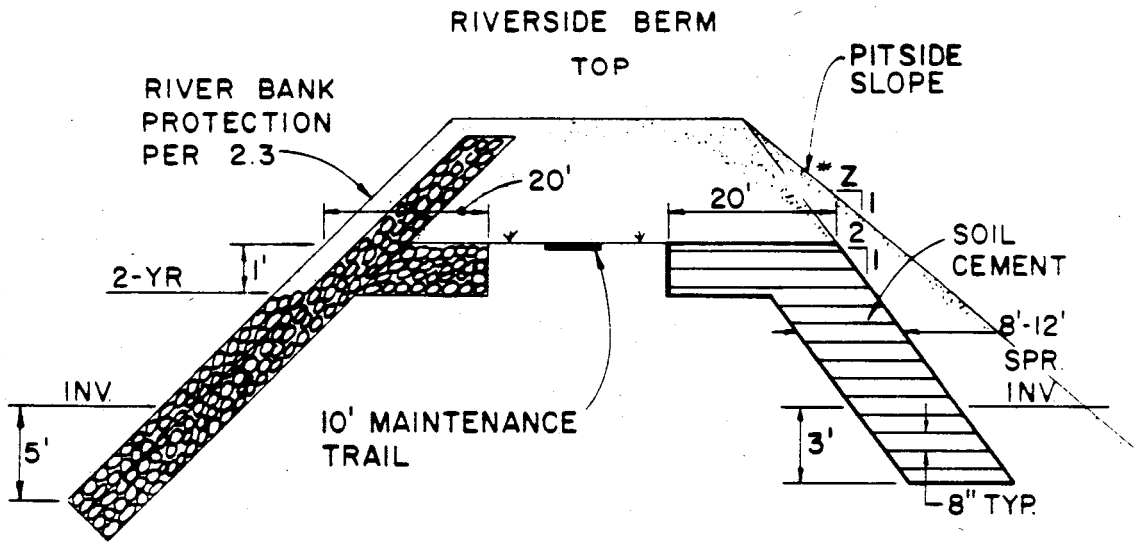

*Z VARIES WITH RECLAIMED USE

WRIGHT WATER ENGINEERS, INC.

The stabilization of lateral berms should be accomplished when mining reaches the berm location. When the lateral berm is proposed immediately upstream or downstream of an existing gravel pit, the stabilization proposed in this section must be implemented prior to the initiation of mining operations adjacent to the berm. When no mining has occurred downstream or upstream, the berm may be stabilized when mining reaches the berm location.

2.5.1 Type A Lateral Berms

Type A lateral berms are berms between adjacent gravel pits. Spacing between Type A lateral berms shall not exceed 1/2 mile as measured longitudinally along a river or a stream channel. These berms must be protected against headcutting to withstand overtopping during the 100-year flood. Erosive forces on the upstream face of lateral berms will be minimal with the exception of wave action caused by winds across the gravel pit's water surface. The means for stabilizing the downstream face of the lateral berms are similar to those required to stabilize the pitside face of riverside berms and are as described in Section 2.5.3 - Protection of Lateral Berms.

2.5.2 Type B Lateral Berms

Type B lateral berms also are berms between adjacent gravel pits. These berms differ from Type A lateral berms in their spacing. Type B lateral berms are located at major arterial road crossings as opposed to every half mile. These berms are intended to provide a greater level of protection than the Type A lateral berms. This will be accomplished in part by the arterial road itself. The means for stabilizing the downstream face of Type B lateral berms are similar to those for Type A

lateral berms and are described in Section 2.5.3 - Protection of Lateral Berms.

2.5.3 Protection of Lateral Berms

Lateral berms are to be protected in a manner similar to the requirements for the pitside slopes of riverbank berms. In general, the crest of lateral berms are to be revegetated and the downstream face of lateral berms are to be stabilized and protected using the methods proposed in Section 2.4 - Pitside Bank Protection.

Riprap, riprap with vegetation, soil cement, and a reinforced core are all viable options for reinforcing both Type A and Type B lateral berms. These methodologies are to comply with the requirements of Section 2.4.1 - Riprap, 2.4.2 - Riprap with Vegetation, 2.4.3 - Soil Cement, and 2.4.4 - Reinforced Core, respectively. The general geometric characteristics of lateral berm protection will conform to the individual details for the selected method of protection except that the protection need extend only 3 feet below the pit normal water level.

2.5.4. Spillway for Type A Lateral Berms

A spillway will only be allowed for Type A lateral berm protection. The existing or future arterial road crossing associated with Type B lateral berms renders the spillway approach infeasible. The required length of the spillway for Type A lateral berms along the South Platte River will be determined using the following equation:

$$L_{s1} = 2{,}500/H^{1.5}$$

In which,

L_{s1} = length of lateral berm spillway
H = height between top of berm and spillway crest

2.6 BERM TOP WIDTHS - RIVERBANK BERMS

This section specifies the minimum top width for gravel mine berms located adjacent to the South Platte River. The top width requirements are specified to protect the berms from rapid failure during floods. Such failure may result in the South Platte River flowing through the adjacent gravel pits and subsequently damaging property along the river. The berm top width requirements consider long term stability and safety along the South Platte River. Localized damages to the berms may result during large floods and may require periodic repair and maintenance as determined by the Adams County Engineer.

The top widths are broken into two classifications, one for an unprotected river bank and one for protected river banks. Unless otherwise indicated, the requirements of Sections 2.3 - Riverbank Protection and 2.4 - Pitside Bank Protection constitute adequate bank protection.

The top widths are expressed as the distance between the top of the river bank slope to the top of the pitside slope. The area between these two tops of slopes should be no steeper than 3 percent and as a minimum have a stand of vegetation which reasonably closely resembles the native vegetation along the site.

2.6.1 Existing Unstable Alignment

When the river is allowed to maintain its existing unstable alignment, and no bank protection is provided beyond the nec-

essary revegetation, the minimum allowable top width of riverside berms will be 400 feet. This is the extreme case in terms of setback requirements imposed on gravel mining operators. It is, however, also the least costly measure in terms of capital expenditures.

When the river is maintained in its existing unstable alignment and the riverbank is protected in accordance with the requirements of Section 2.3 - Riverbank Protection the minimum allowable top width for the riverside berm will be 250 feet.

When the river is left in its existing unstable alignment and no river bank protection is provided, but pitside slope protection is provided in accordance with the requirements of Section 2.4 - Pitside Bank Protection, the allowable minimum top width will be 300 feet.

When the river is maintained in its existing unstable alignment and protection is provided for both the river bank and the pitside slope in accordance with Sections 2.3 - Riverbank Protection and 2.4 - Pitside Bank Protection, the allowable minimum top width of the riverside berm will be 150 feet.

2.6.2 Master Plan Alignment and Minimum Maintenance Alignment

The Master Plan alignment and the minimum maintenance alignment are two cases in which the alignment of the river is predetermined and riverside bank stabilization is provided. The Master Plan alignment is a modification of the minimum maintenance alignment and attempts to reconcile not only the geometric requirements but also property line constraints and constraints imposed by the existing river alignment.

Bank stabilization for the Master Plan alignment and the minimum maintenance alignment will be in accordance with those methodologies presented in Section 2.3 - Riverbank Protection. For the Master Plan alignment, the various acceptable types of bank stabilization are presented in the Master Plan drawings and differ slightly from the requirements specified in Section 2.1 - Types of River Alignment and 2.2 - Revegetation of Berms. The principal differentiation is in the required stabilization scheme. In most cases, where the Master Plan alignment deviates from the requirements specified, the areal extent of the recommended slope stabilization scheme will extend beyond those required if the minimum maintenance alignment were adhered to rigorously.

When the alignment of the South Platte River conforms to either the recommended Master Plan alignment or the minimum maintenance alignment, the minimum allowable top width without pitside bank protection will be 200 feet. This top width presumes that the river banks will be stabilized by the owner in accordance with the requirements specified in the Master Plan or as part of the minimum maintenance alignment.

When the requirements of the Master Plan alignment or the minimum maintenance alignment are adhered to and, in addition to complying with the requirements for river bank stabilization, the pitside slope of riverside berms are stabilized in accordance with Section 2.4 - Pitside Bank Protection, the minimum allowable top width for riverside berms will be 100 feet.

2.7 BERM TOP WIDTH-LATERAL BERMS

This section specifies the minimum top width for lateral berms located adjacent to the South Platte River and oriented perpendicular to the river. The top width requirement is specified to protect the berms

from failure during floods which result in an overtopping of lateral berms and cascading of water in the downstream direction. Instances of major flooding may result in some localized damage of the lateral berms in spite of the protection measures previously suggested. Routine repair and maintenance of all facilities associated with lateral berms must be accomplished.

2.7.1 Type A Lateral Berms

2.7.1.1 Unprotected Type A Lateral Berms. When Type A lateral berms are left in their unprotected natural state, the minimum allowable top width will be 250 feet. This assumes that the surface of the lateral berm is left in its native condition. If the lateral berm is to be reconstructed subsequent to excavation, the top of the lateral berm and the downstream slope must be revegetated in accordance with the requirements of Section 2.2 - Revegetation of Berms.

2.7.1.2 Protected Type A Lateral Berms. When Type A lateral berms are protected in accordance with the requirements of Section 2.5.3 - Protection of Lateral Berms, the minimum allowable top width will be 100 feet.

2.7.2 Type B Lateral Berms

The top width required for Type B lateral berms will exceed that required for Type A lateral berms because of the more critical nature of the Type B lateral berms. Type A lateral berms are designed to withstand flooding events up to the 100-year event, however, because of the possibility of more severe flood events, Type B lateral berms should withstand floods of higher magnitude than the 100-year event.

2.7.2.1 Unprotected Type B Lateral Berms. When Type B lateral berms are left unprotected except for vegetation as specified in Section 2.2 - Revegetation of berms the minimum allowable top width shall be 350 feet.

2.7.2.2 Protected Type B Lateral Berms. When Type B lateral berms are protected in accordance with the requirements of Section 2.5.3 - Protection of Lateral Berms, the minimum allowable top width shall be 200 feet.

2.8 BERM TOP WIDTHS - SUMMARY TABLE

This section presents a summary table of allowable berm top widths based on the methodologies employed for berm stabilization.

TABLE 2.1

RIVERBANK BERM TOP WIDTH

Area Stabilized	Alignment	Type of Stabilization	Minimum Top Width (ft)
None	2.1.1 -Existing Unstable	None	400
Riverbank only	2.1.1 - Existing unstable	2.3 - Riverbank protection	200
		2.3.1 - Riprap 2.3.2 - Riprap with vegetation 2.3.3 - Jetties	
	2.1.2 - Master Plan	2.3 - Riverbank protection	200
		2.3.1 - Riprap 2.3.2 - Riprap with vegetation 2.3.3 - Jetties	
	2.1.3 - Minimum Maintenance	2.3 - Riverbank protection	200
		2.3.1 - Riprap 2.3.2 - Riprap with vegetation 2.3.3 - Jetties	
Pitside bank only	2.1.1. - Existing unstable	2.4 - Pitside bank protection	300
		2.4.1 - Riprap 2.4.2 - Riprap with vegetation 2.4.3 - Soil cement 2.4.4 - Reinforced core 2.4.5 - Side channel spillway	
Riverbank and Pitside Bank	2.1.1 - Existing unstable	2.3 - Riverbank protection and 2.4 - Pitside bank protection	150
	2.1.2 - Master plan	2.3 - Riverbank protection and 2.4 - Pitside bank protection	100
	2.1.3 - Minimum maintenance	2.3 - Riverbank protection and 2.4 - Pitside bank protection	100

TABLE 2.2
LATERAL BERM TOP WIDTH

Berm Type	Type of Stabilization	Minimum Top Width (ft)
Type A	None	250
	2.5.3 - Protection of lateral berms	100
	2.4.1 - Riprap 2.4.2 - Riprap with vegetation 2.4.3 - Soil cement 2.4.4 - Reinforced core 2.5.4 - Spillway for Type A lateral berms	
Type B	None	350
	2.5.3 - Protection of lateral berms	200
	2.4.1 - Riprap 2.4.2 - Riprap with vegetation 2.4.3 - Soil cement 2.4.4 - Reinforced core 2.5.4 - Spillway for Type A lateral berms	

CHAPTER 3.0

IN-RIVER GRAVEL MINING

Mining in the mainstream of the South Platte River or any of its tributaries is strongly discouraged. Without extensive measures to protect the river, the impact of an instream sand gravel extraction can be widespread and severe. All operators proposing to mine the mainstream of the river shall demonstrate conclusively that they will not adversely impact the river and the properties, roads, bridges, diversion structures and utilities on the river for a distance of four miles in the upstream and downstream directions, in addition to taking the mitigating measures required in Chapter 3.0 and obtaining all other permits required by Federal and State law.

Instream mining of the river includes not only mines which are ongoing in the channel of the South Platte River or its tributaries, but also includes offstream gravel mines when it is proposed to relocate the river through such offstream gravel mines. The impacts of relocating a river or a stream through an off channel pit is equivalent to those associated with the actual mining of the South Platte River bed or its tributaries. As such, these requirements will apply to mines which actively mine within a river or stream channel as well as mining operations which propose to relocate a river or a stream through previously mined pits.

One form of instream mining will be allowed. Lowering of the channel invert to the elevation specified in the Master Plan will be allowed if the operation is stopped as soon as District determines the desired degradation has occurred and the associated bank and channel improvements are also constructed.

3.1 GROUNDWATER IMPACTS

The extraction of gravel and other products from the bed of the South Platte River or its tributaries shall be done in such a manner as to prevent damage to adjoining property. This requires that the adjacent groundwater table not be altered or if alteration takes place the owner of any groundwater rights shall be compensated commensurate with any damage which may occur. It also requires the compliance with applicable Colorado water laws and regulations governing injury to existing water rights as well as the compliance with applicable federal and Colorado water quality laws and regulations.

3.2 SEDIMENT TRANSPORT

The instream gravel pits may result in the deposition of significant portions of the sediment load carried by the South Platte River or its tributaries. The gravel operator must show that his mining will not adversely affect the stability of the river or a stream downstream from his site.

3.3 WATER QUALITY

Long range water quality concerns can be significant in an instream gravel pit lake because of pollution constituents in the river at the location of the excavation. Any operations in the river shall be required to comply with applicable federal and Colorado water quality laws and regulations.

3.4 SIDESLOPE PROTECTION

Excavation of materials from the bed of the South Platte River must be done in a manner which does not jeopardize the stability of the channel banks. To accomplish this, the side slopes of the river bank

above the pre-mining channel invert should be extended downward. This slope will generally be between 2.5 and 4 feet horizontal for every one foot vertical. The actual slope will depend on the method of bank stabilization proposed at the site.

3.5 HEADCUTTING CONTROL

When mining in the river bed is permitted, gravel operators must prevent long term headcutting from propagating in the upstream direction. The removal of material from the riverbed results in excessive headcutting which can and does endanger structures upstream crossing the river or a stream or located in the adjacent banks of same. It is imperative that the operators install positive controls as specified below to prevent headcutting of any type from occurring upstream as a result of gravel extraction from the river bottom.

3.5.1 Control Structures

The impacts of the instream gravel extraction must be mitigated with a positive structural control at the upstream end of the instream pit. The structure must be protected from failure through a wide variety of flow rates, gravel pit depths and inconsistent soil properties.

Instream control structures will generally require the construction of a structural control incorporating a double row of sheet piling such as that shown on Figure 3.1. Site specific designs incorporating specific soils and geometric information shall be prepared and submitted to District for approval.

FIG. 3.1

TYPICAL INSTREAM HEADCUTTING CONTROL STRUCTURE

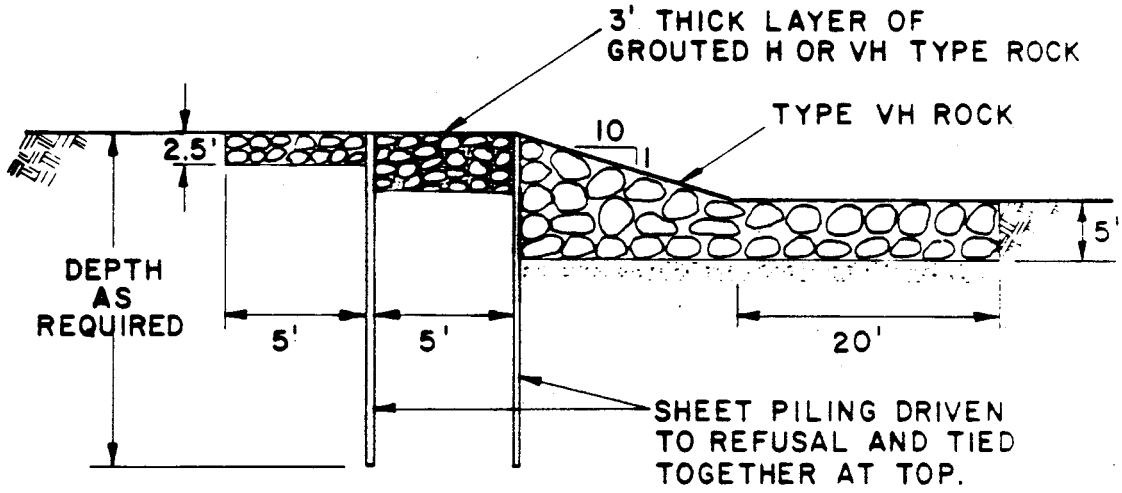

DEPTH OF SHEET PILING, GUAGE OF PILING, SIZE OF ROCK, AND ROCK AND FILTER GRADATIONS ARE TO BE DETERMINED BY A REGISTERED ENGINEER ON A SITE SPECIFIC BASIS AND ARE TO BE SUBMITTED TO THE COUNTY ENGINEER FOR APPROVAL.

PROVIDE AN OPENING FOR LOW FLOWS, SAFE PASSAGE OF BOATERS AND FISH MIGRATION. THE LOW FLOW OPENING SHALL BE DESIGNED IN STEPS OF POOLS AND CHUTES WITH THE LAST CREST OF THE DOWNSTREAM CHUTE BEING AT THE PROJECTED TAILWATER WHEN ALL GRAVEL IS REMOVED FROM THE PIT. THE VERTICAL DISTANCE BETWEEN SUCESSIVE CRESTS SHALL NOT EXCEED 18-INCHES.

WRIGHT WATER ENGINEERS, INC.

3.5.2 Location of Control Structures

The location of the positive control will be at the upstream end of the gravel pit. In no case should the top of the cutoff be any lower than the Master Plan invert of the South Platte River or the invert or its tributaries identified in Major Drainageway Planning Reports or FHAD reports. The positive control will be extended perpendicular to the main channel into the adjacent overbank a minimum of 250 feet. Where gravel pits exist in the overbank, a positive control should extend across the lateral berms as well.

3.5.3 Overbank Protection

In areas where there is no overbank gravel mining operation in existence and none is proposed, the overbank cutoff may be less substantial. In these cases, the overbank cutoff may consist of Type M (USDCM) riprap placed in a trench 6 feet deep and 3 feet wide and extending across the entire floodplain. This protection will begin at the end of the embedment of the structural positive control as discussed in Section 3.5.2 - Location of Control Structures.

3.6 UPSTREAM PROTECTION

Because of the increased energy grade line slope immediately upstream of the gravel pit cutoff structure, it will be necessary to protect the river upstream from general degradation and against potential damages to bridges, utility crossings and property.

3.6.1 Extent of Upstream Protection

The protection required upstream of the crest of the pit cutoff structure shall extend upstream a minimum of 175 feet.

3.6.2 Type of Protection

The type of protection used to protect the river bottom shall be riprap or cobble. The required size of protection shall be determined according to the requirements of the USDCM Major Drainage Chapter, Section 5-Riprap. Rock or cobble satisfying the proper gradation will be allowed.

CHAPTER 4.0
RECLAMATION

The mineral rules and regulations, published by the Colorado Mined Land Reclamation Board, establish the requirements for reclamation of mined lands in the State of Colorado. These requirements must be satisfied and adhered to for the life of the mine in order to obtain a mining permit for the extraction of gravel. The requirements presented in this document supplement those of the Mined Land Reclamation Board and recognize the special riverine corridor stability needs. In no case do the requirements of this document imply that the requirements of the Mined Land Reclamation Board, as a minimum, should not be adhered to.

4.1 RECREATIONAL CRITERIA

When gravel pit lakes are to be reclaimed as recreational amenities, the side slopes of the lakes should be sloped at a minimum of 5 horizontal to 1 vertical (5H:1V) for a distance from the top of the berm to a point 8 feet under the normal water surface. There the slope can be at 2H:1V to the lake bottom. Where concentrated swimming is to be actively encouraged, side slopes of 20H:1V, or flatter, are recommended in the beach areas.

Irregularities in the lake shorelines are required for variety in the environment and to enhance wildlife habitat. These irregularities also help protect the banks from wave action. Other recreational or wildlife features, such as islands, may be required by local government.

Corridors must be provided for access to recreational areas and maintenance trails. These corridors should be incorporated into riverside

berms, or through other portions of the lease properties if developed as part of a overall recreational master plan by the operators or by the local governments. A corridor of 100 feet minimum is recommended to accommodate multiple recreational uses. This river corridor minimum width should be maintained on both sides of the river for its entire length. The recreational corridor may be contained within the required top width of riverside berms.

4.2 REVEGETATION CRITERIA

Revegetation of all areas not receiving other stabilization techniques will be required. The revegetation should be installed in conformance with the Guidelines for Vegetation and must meet the approval of the Colorado Mined Land Reclamation Board.

The goal of revegetation is to reestablish the historic ground cover as closely as possible to promote the return of the historic animal population, to protect areas from erosion by wind and water and to improve the aesthetics of the area. To accomplish this, revegetation must be undertaken at the earliest opportunity. Revegetation must begin as soon as the slope has attained its required configuration subject to the seeding criteria specified in Guidelines for Vegetation. When slopes are in areas which will be inactive for periods in excess of six months vegetation must be reestablished.