Property of
Flood Control District of MC Library
Please Return to
2801 W. Durango
Phoenix, AZ 85009

FCD
Received May 28, 1985

CITY OF GLENDALE

SPECIFICATIONS FOR CONSTRUCTION OF MODIFICATIONS TO GLENDALE WELL NO. 8

W823043E

1985

JAMES M. MONTGOMERY, CONSULTING ENGINEERS, INC.

A023.502

CITY OF GLENDALE, ARIZONA

ADDENDUM NO. 1

SPECIFICATIONS FOR CONSTRUCTION OF
MODIFICATIONS TO GLENDALE WELL NO. 8
W82 3043E

NOTE: BIDDERS SHALL EXECUTE CERTIFICATION AT THE END OF THIS ADDENDUM AND SHALL ATTACH ADDENDUM TO SPECIFICATIONS SUBMITTED WITH THE BID.

---

1. INSTRUCTIONS TO BIDDERS, page I-6, paragraph I.20, TIME OF COMPLETION, line 4, change "90" to "120" consecutive calendar days.

2. DEEP WELL PUMPS, Section 302.02 (a) (3), BOLTS, page 302-5, delete, "of Type 416".

Dated: May 23, 1985

City of Glendale, Arizona

By: James M. Montgomery
Consulting Engineers, Inc.

Laurence R. Hampton, P.E.

BIDDER'S CERTIFICATION

I acknowledge receipt of the foregoing Addendum No. 1 and accept all conditions contained therein.

Dated:_____ Bidder:_____

By:_____
(signature)

_____
(title)

ENGINEERING DIVISION
LIBRARY

CITY OF GLENDALE, ARIZONA

SPECIFICATIONS FOR CONSTRUCTION OF

MODIFICATIONS TO GLENDALE WELL NO. 8

PROJECT W823043E

1985

James M. Montgomery, Consulting Engineers, Inc.
9830 North 32nd Street, Suite B-110
Phoenix, Arizona 85028

070183

PROJECT SPECIFICATIONS AND CONTRACT DOCUMENTS

PROJECT W823043E

MODIFICATIONS TO GLENDALE WELL NO. 8

PUBLIC WORKS/ENGINEERING DEPARTMENT

CITY OF GLENDALE

GLENDALE, ARIZONA

MAYOR

George R. Renner

COUNCILMEN

Richard Bellah
Joe A. Falbo
Bruce Heatwole
Robert L. Huffman
Quentin V. Tolby
Dillis R. Ward

CITY MANAGER

Martin Vanacour

CITY CLERK

Lavergne Behm

CITY ATTORNEY

Peter Van Haren

1985

070183

TABLE OF CONTENTS

Paragraph		Page
	BIDDING AND CONTRACTUAL DOCUMENTS	
	BIDDING REQUIREMENTS	
	Notice Inviting Bids	N-1
	Special Notice	SN-1
	Instructions to Bidders	I-1
	Bid Forms	
	o Proposal	B-1
	o List of Subcontractors	B-6
	o Equipment/Material Source Information	B-6
	o Bidders General Information	B-8
	o Bid Bond	B-10
	o Non-Collusion Affidavit	B-11
	CONTRACT FORMS	
	Agreement	A-1
	Performance Bond	P-1
	Payment Bond	P-3
	Certificate of Insurance	CI-1
	5% Preferential Affidavit	PA-1
	Contractor's Affidavit Regarding Settlement of Claims	LW-1
	CONDITIONS OF THE CONTRACT	
	GENERAL CONDITIONS	
	ARTICLE 1 - DEFINITIONS	
1.01	Owner	1-1
1.02	Engineer	1-1
1.03	Resident project representative	1-1
1.04	Contractor	1-1
1.05	Subcontractor	1-1
1.06	Contract	1-2
1.07	Contract documents	1-2
1.08	Specifications	1-2
1.09	Drawings; contract drawings	1-2
1.10	Date of completion	1-2
1.11	Contract price	1-3
1.12	Contract time	1-3
1.13	Change order	1-3
1.14	Field order	1-3
1.15	Notice of award	1-3
1.16	Notice to proceed	1-3
1.17	Bid	1-3
1.18	Underground facilities	1-3

TABLE OF CONTENTS

Paragraph		Page
ARTICLE 2 - SPECIFICATIONS, DRAWINGS, AND RELATED DATA		
2.01	Intent of contract documents	2-1
2.02	Specifications and drawings complementary	2-1
2.03	Discrepancies in the contract documents	2-1
2.04	Order of precedence of contract documents	2-1
2.05	Reference to standards or publications	2-2
2.06	References to proprietary products	2-2
2.07	Contract documents furnished to Contractor	2-2
ARTICLE 3 - ENGINEER-OWNER-CONTRACTOR RELATIONS		
3.01	Engineer's authority	3-1
3.02	Legal address of Contractor	3-1
3.03	Contractor's daily reports	3-1
3.04	Rights-of-way	3-1
3.05	Contractor's obligations	3-3
3.06	Claims and protests	3-4
3.07	Arbitration	3-5
3.08	Inspection and testing	3-5
3.09	Assignment forbidden	3-6
3.10	Subcontract limitations	3-6
3.11	Temporary suspension of work	3-7
3.12	Extensions of time for delay due to excusable inclement weather	3-9
3.13	Termination of contract by Owner (Contractor not at fault)	3-9
3.14	Termination of contract by Owner (Contractor default)	3-10
3.15	Termination of contract by Contractor	3-11
3.16	Failure to comply	3-11
3.17	Changed conditions	3-11
3.18	Lines and grades	3-12
3.19	Physical conditions	3-13
ARTICLE 4 - MATERIALS AND WORKMANSHIP		
4.01	Materials and equipment - general	4-1
4.02	Safeguarding of equipment, materials, and work	4-1
4.03	Contractor's utilities	4-1
4.04	Title to materials found on the work	4-1
4.05	Defective equipment, materials, or work	4-1
4.06	Character of workers	4-2
ARTICLE 5 - PROGRESS AND PAYMENT		
5.01	Breakdown of contract price of lump sum contracts	5-1
5.02	Changes	5-1
5.03	Extra work	5-2

TABLE OF CONTENTS

Paragraph		Page
5.04	Right to audit	5-7
5.05	Overtime work	5-8
5.06	Liquidated damages	5-8
5.07	Progress schedules	5-8
5.08	Monthly estimates and payments	5-9
5.09	Final estimate and payment	5-10
5.10	Final payment terminates liability of Owner	5-11
5.11	Release of retainage and other deductions	5-11

ARTICLE 6 - BONDS, INSURANCE, LEGAL RESPONSIBILITY, AND PUBLIC SAFETY

6.01	Performance bond	6-1
6.02	Payment bond	6-1
6.03	Additional surety	6-1
6.04	Maintenance and guarantee	6-1
6.05	Insurance	6-2
6.06	Indemnification of Owner and Engineer	6-3
6.07	Laws and regulations	6-4
6.08	Permits and licenses	6-4
6.09	Sales and use taxes	6-4
6.10	Labor discrimination	6-4
6.11	Public safety and convenience	6-5
6.12	Sanitary provisions	6-5
6.13	Federal safety and health regulations	6-5
6.14	Contractor's responsibility for losses and damage	6-5
6.15	Beneficial use or partial utilization	6-6

SUPPLEMENTAL GENERAL CONDITIONS

ARTICLE 7 - GENERAL

7.01	General	7-1
7.02	Supplemental definitions	7-1
7.03	Subcontract limitations	7-1
7.04	Binding arbitration	7-1
7.05	Physical conditions	7-3
7.06	Excusable inclement weather delays	7-4

ARTICLE 8 - AMOUNTS OF LIQUIDATED DAMAGES AND INSURANCE

8.01	Amount of liquidated damages	8-1
8.02	Insurance	8-1

ARTICLE 9 - CITY OF GLENDALE REQUIREMENTS

9.01	General	9-1
9.02	Permits	9-1
9.03	Subcontractors	9-1
9.04	Staking and inspection	9-2
9.05	Dust prevention	9-2

TABLE OF CONTENTS

Paragraph		Page
9.06	Excess material	9-2
9.07	Electric power and water	9-2
9.08	Maintenance of irrigation facilities	9-3
9.09	Clean-up	9-3
9.10	Payments to contractor	9-3
9.11	Existing utilities	9-3
9.12	Energized aerial electrical power lines	9-4
9.13	Survey control points and monuments	9-4
9.14	Southwest Gas facilities exposed during construction	9-4

TECHNICAL PROVISIONS

DIVISION 100 - GENERAL REQUIREMENTS

SECTION 101 - GENERAL

101.01	The requirement	101-1
101.02	Description of work	101-1
101.03	Site of work	101-1
101.04	Beginning and completion of the work	101-1
101.05	Contract drawings	101-1
101.06	Order of the work	101-1
101.07	Interference with adjacent work	101-2
101.08	Salvage	101-2
101.09	Abbreviations	101-2

SECTION 110 - MOBILIZATION

110.01	Definition and scope	110-1
110.02	Payment for mobilization	110-1

SECTION 130 - CONTRACTOR SUBMITTALS

130.01	General	130-1
130.02	Shop drawings	130-1
130.03	Contractor's schedules	130-2
130.04	Submittal of proposed equivalent products	130-3
130.05	Samples	130-3
130.06	Technical manuals	130-3
130.07	Spare parts lists	130-5
130.08	Record drawings	130-5

SECTION 140 - QUALITY CONTROL

140.01	Site investigation and control	140-1
140.02	Inspection of the work	140-1
140.03	Time of inspection and tests	140-1
140.04	Sampling and testing	140-2
140.05	Right of rejection	140-2

TABLE OF CONTENTS

Paragraph		Page
SECTION 150 - TEMPORARY CONSTRUCTION FACILITIES		
150.01	Contractor's plant and equipment	150-1
150.02	Utilities	150-1
150.03	Safety	150-2
SECTION 152 - SITE ACCESS		
152.01	Highway limitations	152-1
152.02	Temporary crossings	152-1
SECTION 154 - ENVIRONMENTAL CONTROLS		
154.01	Explosives and blasting	154-1
154.02	Dust abatement	154-1
154.03	Rubbish control	154-1
154.04	Sanitation	154-1
154.05	Chemicals	154-2
SECTION 160 - PROTECTION AND RESTORATION OF EXISTING FACILITIES		
160.01	General	160-1
160.02	Protection of street or roadway markers	160-1
160.03	Restoration of pavement	160-1
160.04	Existing utilities and improvements	160-3
160.05	Notification by the Contractor	160-4
SECTION 170 - EQUIPMENT TESTING AND PLANT START-UP		
170.01	General	170-1
170.02	Equipment testing	170-1
SECTION 190 - PROJECT CLOSEOUT		
190.01	Final cleanup	190-1
190.02	Closeout timetable	190-1
190.03	Technical Manual Submittals	190-1
190.04	Final submittals	190-1
190.05	Maintenance and guarantee	190-2
190.06	Bond	190-2
DIVISION 200 - CIVIL		
SECTION 201 - EARTHWORK		
201.01	Trench excavation, backfilling, and compaction	201-1

TABLE OF CONTENTS

Paragraph		Page
SECTION 203 - WELL CLEANING		
203.01	Initial cleaning	203-1
203.02	Acidize the well	203-1
203.03	Video survey	203-2
203.04	Disinfection	203-2
203.05	Completion of the well	203-2
203.06	Safety procedures	203-2
SECTION 204 - PAINTING AND COATINGS		
204.01	General	204-1
204.02	Safety and health requirements	204-2
204.03	Atmospheric conditions	204-3
204.04	Factory-applied coatings and touch-up	204-3
204.05	Aluminum metal installation	204-3
204.06	Cleanup	204-4
204.07	Warranty inspection	204-4
204.08	System A - ungalvanized ferrous metal, normal environment	204-4
204.09	System H - ferrous metal, buried, or submerged in wastewater	204-4
204.10	System J - buried galvanized and black steel pipe	204-5
204.11	System K - buried miscellaneous ferrous surfaces, couplings, valves, and flanged joints (excluding pipe)	204-5
SECTION 205 - CONCRETE		
205.01	General	205-1
205.02	Compressive strength	205-1
205.03	Cement	205-1
205.04	Aggregates	205-1
205.05	Slump	205-1
205.06	Forms	205-1
205.07	Placement of concrete	205-1
205.08	Finish of concrete surfaces	205-1
205.09	Curing	205-2
SECTION 208 - REINFORCEMENT STEEL		
208.01	General	208-1
208.02	Materials	208-1
208.03	Installation	208-1
SECTION 209 - STRUCTURAL STEEL AND MISCELLANEOUS METALWORK		
209.01	General	209-1
209.02	Fabrication and erection	209-1

TABLE OF CONTENTS

Paragraph		Page
209.03	Welding	209-1
209.04	Galvanizing	209-1
209.05	Bolts	209-2
209.06	Power-driven pins	209-2

SECTION 214 - PIPING

214.01	General	214-1
214.02	Small steel pipe	214-1
214.03	Ductile iron pipe	214-1
214.04	Copper tubing	214-2
214.05	Asbestos-cement water pipe	214-2
214.06	PVC (polyvinyl chloride) pipe	214-3
214.07	Mechanical-type couplings	214-3
214.08	Sleeve-type couplings	214-3
214.09	Gaskets and bolts	214-4
214.10	Insulating connections	214-4
214.11	Pressure gages	214-4

SECTION 215 - VALVES AND GATES

215.01	General	215-1
215.02	Epoxy coating	215-2
215.03	Gate valves	215-3
215.04	Swing check valves	215-3
215.05	Air-vacuum and air release valves	215-3
215.06	Backflow preventer	215-3
215.07	Solenoid valves	215-3
215.08	Undesignated small valves	215-4

SECTION 216 - TESTING AND DISINFECTING

216.01	General	216-1
216.02	Disinfecting pipelines	216-1
216.03	Connections to existing system	216-1

DIVISION 300 - MECHANICAL

SECTION 300 - MECHANICAL WORK - GENERAL

300.01	General	300-1
300.02	Noise level	300-1
300.03	Vibration level	300-1
300.04	Couplings	300-1
300.05	Shafting	300-2
300.06	Bearings	300-2
300.07	Flexible connectors	300-3
300.08	Insulating connections	300-3
300.09	Supports, foundations, and pipe hangers	300-4
300.10	Gaskets and packings	300-5

TABLE OF CONTENTS

Paragraph		Page
300.11	Machine finish	300-5
300.12	Tolerances	300-6
300.13	Welding	300-6
300.14	Protective coatings	300-6
300.15	Protection of equipment	300-6
300.16	Nameplates	300-7
300.17	Tools	300-7
300.18	Flanges and pipe threads	300-7
300.19	Inspection, start-up, and field adjustment	300-7

SECTION 301 - ELECTRIC MOTORS

301.01	General	301-1
301.02	Manufacturer and supplier	301-1
301.03	Design characteristics	301-1
301.04	Motor Voltage	301-1
301.05	Motors installed indoors	301-2
301.06	Explosion-proof motors	301-2
301.07	Insulation (heavy duty motors)	301-2
301.08	Bearings	301-2
301.09	Nameplates	301-3
301.10	Shop Drawings	301-3
301.11	Information to manufacturers	301-4
301.12	Manufacturers	301-4

SECTION 302 - PUMPING EQUIPMENT

302.01	General	302-1
302.02	Deep well pumps (motor driven)	302-3
302.03	Horizontal booster pump	302-8

SECTION 303 - CHLORINATION EQUIPMENT

303.01	General	303-1
303.02	Vacuum regulators	303-1
303.03	Chlorine ejectors	303-2
303.04	Chlorine diffusers	303-2
303.05	Valves, meters, adapters, gas and solution piping	303-2
303.06	Aluminum housing	303-3
303.07	Booster pump	303-4

SECTION 312 - FLOW METERS

312.01	General	312-1
312.02	In-line propeller meters	312-1

DIVISION 400 - ELECTRICAL

SECTION 400 - ELECTRICAL WORK

400.01	General	400-1
400.02	Codes and standards	400-1

TABLE OF CONTENTS

Paragraph		Page
400.03	Working drawings	400-1
400.04	Record drawings	400-2
400.05	Equipment, materials, and workmanship	400-2
400.06	Testing	400-2
400.07	Shop drawings and catalog data	400-3
400.08	Area designations	400-3
400.09	Utility service facilities	400-4
400.10	Grounding	400-4
400.11	Equipment anchoring	400-5
400.12	Housekeeping pads	400-5
400.13	Conductor and equipment identification	400-5
400.14	Finish	400-6
400.15	Underground raceway	400-7
400.16	Raceway	400-7
400.17	Wire and cable	400-9
400.18	Splices and terminations	400-10
400.19	Conduit fittings	400-11
400.20	Boxes and covers	400-12
400.21	Motor control	400-12
400.22	Nameplates	400-13
400.23	Telemetry and control equipment	400-13
400.24	Tests, inspections, clean-up, and spares	400-14

NOTICE INVITING BIDS

RECEIPT OF BIDS: Sealed bids will be received at the office of the City of Glendale Engineering Department, Owner of the work located at 5850 West Glendale Avenue, Glendale, Arizona, 85301 until 2:00 p.m., on Tuesday, May 28, 1985, for furnishing all plant, material, equipment and labor, and to complete contruction of:

Modifications to Glendale Well No. 8 - Project W823043E

DESCRIPTION OF WORK: The work involves modifications to the existing City of Glendale Well No. 8. This includes cleaning, video taping, and test pumping the existing well, furnishing and installing a submersible pump and motor, a pitless unit, and all electrical wiring, cabinets, and controls. The work also requires construction of a water transmission line to include approximately 260 feet of 8-inch diameter ductile iron pipe with valves and fittings, and approximately 270 feet of 8-inch diameter asbestos cement pipe and fittings. The project also includes the installation of a telemetry pump control system, furnished by the City of Glendale. The electrical and telemetry controls will be installed in an existing sewage lift station control room, located near the well site.

SITE OF WORK: The site of the work is located in Section 12, Township 3 North, Range 1 East, approximately 150 feet west of the centerline of 67th Avenue, and 1300 feet south of the centerline of Greenway Road, between Greenway and Thunderbird Roads, within the city limits of Glendale, Arizona.

COMPLETION OF WORK: All work must be completed within 120 calendar days after the commencement date stated in the Notice to Proceed.

OPENING OF BIDS: The bids will be publicly opened and read at 2:00 p.m. on Tuesday, May 28, 1985, at the above-mentioned office of the Owner.

OBTAINING CONTRACT DOCUMENTS: The Contract Documents are entitled "Modifications to Glendale Well No. 8 - Project W823043E". All Contract Documents may be obtained at the office of James M. Montgomery, Consulting Engineers, Inc., 9830 North 32nd Street, Suite B-110, Phoenix, Arizona, 85028, upon payment of $25.00 (non-refundable) for each set of Contract Documents (including specifications and accompanying reduced scale drawings). The scale of the reduced drawings is about one-half of the original scale. If full-scale drawings are desired they may be purchased at reproduction cost from James M. Montgomery, Consulting Engineers, Inc. Checks for the non-refundable fee should be made payable to James M. Montgomery, Consulting Engineers, Inc..

BID SECURITY: Each bid shall be accompanied by a certified or cashier's check or bid bond in the amount of 5 percent of the total bid price payable to the City of Glendale, Arizona as a guarantee that the bidder, if its bid is accepted, will promptly execute the Contract.

BIDS TO REMAIN OPEN: The Bidder shall guarantee the Total Bid Price for a period of 30 calendar days from the date of bid opening.

NOTICE INVITING BIDS

PRE-BID VISIT TO PROJECT SITE: Prospective bidders are encouraged to attend a pre-bid walk through of the proposed project site which will be conducted jointly by the Owner and Engineer following the pre-bid conference, scheduled for 10:00 a.m. on Tuesday, May 21, 1985. The object of the walk through is to acquaint bidders with the site conditions.

ADDRESS AND MARKING OF BID: The envelope enclosing the bid shall be sealed and addressed to the City of Glendale Engineering Department and delivered or mailed to 5850 West Glendale Avenue, Glendale, Arizona, 85301. The envelope shall be plainly marked on the outside, lower right-hand corner, indicating:

(1) The Bidder's name;
(2) The project number;
(3) The title of the project; and
(4) The time and date the bids are to be received.

The certified or cashier's check, money order, or bidder's bond shall be enclosed in the same envelope with the bid.

OWNER'S RIGHTS RESERVED: The Owner reserves the right to reject any or all bids, to waive any informality in a bid, and to make awards to the lowest responsive, responsible bidder as it may best serve the interest of the Owner.

Date: May 1, 1985

Owner: CITY OF GLENDALE, ARIZONA

Published: The Glendale Star

By: Martin Vanacour
City Manager

SPECIAL NOTICE

Bidder's attention is called to the fact that no bid is complete without the return of this book of project specifications and contract documents. Addenda shall be attached inside the front cover of this booklet. Bids will be returned unopened, if not submitted properly sealed.

Bids shall be enclosed in sealed envelopes, marked in the outside lower right-hand corner, indicating:

(1) The Bidder's name;
(2) The project number;
(3) The title of the project; and
(4) The time and date the bids are to be received.

INSTRUCTIONS TO BIDDERS

I.1. BID FORM. The bid shall be made on the bidding schedule(s) bound herein and the pages shall not be removed from the bound volume. The complete volume shall be enclosed in a sealed envelope bearing the name of the bidder and name of the project. In the event there is more than one bidding schedule, the bidder may bid on any individual schedule or on any combination of schedules.

I.2. SUBMISSION OF BIDS. The bid shall be delivered by the time and to the place stipulated in the Notice Inviting Bids. It is the bidder's sole responsibility to see that his bid is received in proper time. Any bid received after the scheduled closing time for receipt of bids will be returned to the bidder unopened.

I.3. WITHDRAWAL OF BID. The bid may be withdrawn by the bidder by means of a written request, signed by the bidder or his properly authorized representative. Such written request must be delivered to the place stipulated in the Notice Inviting Bids for receipt of bids prior to the scheduled closing time for receipt of bids.

I.4. MODIFICATIONS AND UNAUTHORIZED ALTERNATIVE BIDS. Unauthorized conditions, limitations, or provisos attached to a bid will render it informal and may cause its rejection as being non-responsive. The completed bid forms shall be without interlineations, alterations, or erasures. Alternative bids will not be considered unless called for. Oral, telegraphic, or telephonic bids or modifications will not be considered.

I.5. DISCREPANCIES IN BIDS. In the event there is more than one bid item in a bidding schedule, the bidder shall furnish a price for all bid items in the schedule, and failure to do so will render the bid non-responsive and may cause its rejection. In the event there are unit price bid items in a bidding schedule and the "amount written in words" for a unit price bid item does not equal the product of the unit price and quantity, the unit price written in words shall govern and the amount will be corrected accordingly, and the Contractor shall be bound by said correction. In the event there is more than one bid item in a bidding schedule and the total indicated for the schedule does not agree with the sum of the prices bid on the individual items, the prices written in words bid on the individual items shall govern and the total for the schedule will be corrected accordingly, and the Contractor shall be bound by said correction.

I.6. BID SECURITY, BONDS, AND INSURANCE: Each bid shall be accompanied by a certified or cashier's check or approved bid bond in the amount stated in the Notice Inviting Bids. Said check or bond shall be made payable to the Owner and shall be given as a guarantee that the bidder, if awarded the work, will enter into a contract within 10 calendar days after receipt of the agreement forms from the Owner, and will furnish the necessary insurance certificates, Payment Bond, and Performance Bond; each of said bonds to be in the amount stated in the General Conditions. In case of refusal or failure to enter into said contract, the check or bid bond, as the case may be, shall be forfeited to the Owner. If the bidder elects to furnish a bid bond as his bid security, he shall use the bid bond form bound herein, or one conforming substantially to it in form.

The form of the Contract, which the successful bidder as Contractor will be required to execute, and the forms of the bonds and insurance form which he will be required to furnish are included in the Contract Documents and should be carefully examined by the bidder. The contract, bonds and insurance form will be executed in four (4) original counterparts.

I.7. BIDDER'S EXAMINATION OF CONTRACT DOCUMENTS AND SITE

(a) It is the responsibility of each Bidder before submitting a Bid, to:

(1) Examine the Contract Documents thoroughly.

(2) Visit the site to become familiar with local conditions that may affect cost, progress, performance, or furnishing of the work.

(3) Consider federal, state and local Laws and Regulations that may affect cost, progress, performance or furnishing of the work.

(4) Study and carefully correlate the Bidder's observations with the Contract Documents.

(5) Notify the Engineer of all conflicts, errors, or discrepancies in the Contract Documents.

(b) Reference is made to the Supplemental General Conditions for identification of:

(1) Those reports of explorations and tests of subsurface conditions at the site which have been utilized by the Engineer in the preparation of the Contract Documents. The Bidder may rely upon the accuracy of the technical data contained in such reports but not upon non-technical data, interpretations, or opinions contained therein or for the completeness thereof for the purposes of bidding or construction.

(2) Those drawings of physical conditions in or relating to existing surface and subsurface conditions (except Underground Facilities) which are at or contiguous to the site have been utilized by the Engineer in the preparation of the Contract Documents. The bidder may rely upon the accuracy of the technical data contained in such drawings but not upon the completeness thereof for the purposes of bidding or construction.

Copies of such reports and drawings will be made available by Owner to any Bidder on request. Those reports and drawings are not part of the Contract Documents, but the technical data contained therein upon which the Bidder is entitled to rely, as provided in Paragraph 7.05 of the Supplemental General Conditions, are incorporated therein by reference.

(c) Information and data reflected in the Contract Documents with respect to Underground Facilities at or contiguous to the site is based upon information

and data furnished to the Owner and the Engineer by Owners of such Underground Facilities or others, and the Owner does not assume responsibility for the accuracy or completeness thereof unless it is expressly provided otherwise in the Supplemental General Conditions and/or the Section entitled "Protection and Restoration of Existing Facilities" of the Technical Provisions.

(d) Provisions concerning responsibilities for the adequacy of data furnished to prospective Bidders on subsurface conditions, Underground Facilities and other physical conditions, and possible changes in the Contract Documents due to differing conditions appear in Paragraph 3.19 of the General Conditions.

(e) Before submitting a Bid, each Bidder will, at Bidder's own expense, make or obtain any additional examinations, investigations, explorations, tests, and studies and obtain any additional information and data which pertain to the physical conditions (surface, subsurface, and Underground Facilities) at or contiguous to the site or otherwise which may affect cost, progress, performance or furnishing of the Work and which the Bidder deems necessary to determine its Bid for performing and furnishing the Work in accordance with the time, price, and other terms and conditions of the Contract Documents.

(f) On request in advance, Owner will provide each Bidder access to the site to conduct such explorations and tests as each Bidder deems necessary for submission of a Bid. Bidder shall fill all holes and shall clean up and restore the site to its former condition upon completion of such explorations.

(g) The lands upon which the Work is to be performed, right-of-way and easements for access thereto and other lands designated for use by the Contractor in performing the Work are identified in the Contract Documents. All additional lands and access thereto required for temporary construction facilities or storage of materials and equipment are to be provided by the Contractor. Easements for permanent structures or permanent changes in existing structures are to be obtained and paid for by the Owner unless otherwise provided in the Contract Documents.

(h) The submission of a Bid will constitute an incontrovertible representation by the Bidder that the Bidder has complied with every requirement of this Article I.7, that without exception the Bid is premised upon performing and furnishing the Work required by the Contract Documents and such means, methods, techniques, sequences, or procedures of construction as may be indicated in or required by the Contract Documents, and that the Contract Documents are sufficient in scope and detail to indicate and convey understanding of all terms and conditions for performance and furnishing of the Work.

I.8. QUANTITIES OF WORK. The quantities of work or material stated in unit price items of the Bid are supplied only to give an indication of the general scope of the work; the Owner does not expressly or by implication agree that the actual amount of work or material will correspond therewith, and reserves the

right after award to increase or decrease the amount of any unit price item of the work by an amount up to and including 25 percent of any bid item, or to omit portions of such work as may be deemed necessary or expedient by the Engineer, without a change in the unit price, and shall include the right to delete any bid item in its entirety, or to add additional bid items up to and including an aggregate total amount not to exceed 25 percent of the total amount of the Contract.

I.9. COMPETENCY OF BIDDERS. In selecting the lowest responsible bidder, consideration will be given not only to the financial standing but also to the general competency of the bidder for the performance of the work covered by the bid. To this end, each bid shall be supported by a statement of the bidder's experience as of recent date on the form entitled "INFORMATION REQUIRED OF BIDDER," bound herein.

I.10. DISQUALIFICATION OF BIDDERS. More than one bid from an individual, firm, partnership, corporation, or association under the same or different names will not be considered. If Owner believes that any bidder is interested in more than one bid for the work contemplated, all bids in which such bidder is interested will be rejected. If Owner believes that collusion exists among the bidders, all bids will be rejected.

I.11. RETURN OF BID SECURITY. The bid securities of the three (3) lowest bidders will be retained until the contract is awarded, or other disposition made thereof. The bid securities of all bidders, except the three (3) lowest, will be returned promptly after the canvass of bids.

I.12. AWARD OF CONTRACT. Award of a contract, if it be awarded, will be based primarily on the lowest overall cost to the Owner, and will be made to a responsive, responsible bidder whose bid complies with all the requirements prescribed. Any such award will be made within 30 calendar days after opening of the bids, unless otherwise specified in the Notice Inviting Bids. Unless otherwise indicated, a single award will not be made for less than all the bid items in an individual bidding schedule. In the event the entire work is contained in more than one bidding schedule, the Owner may award schedules individually or in combination. In the case of 2 bidding schedules which are alternative to each other, only one of such alternative schedules will be awarded.

I.13. EXECUTION OF CONTRACT. The bidder to whom award is made shall execute a written contract with the Owner on the form of agreement provided, shall secure all insurance, and shall furnish all certificates and bonds required by the Contract Documents within 10 calendar days after receipt of the agreement forms from the Owner. Failure or refusal to enter into a contract as herein provided or to conform to any of the stipulated requirements in connection therewith shall be just cause for annulment of the award and forfeiture of the bid security. If the successful bidder refuses or fails to execute the Contract, the Owner may award the Contract to the second lowest

responsive, responsible bidder. If the second lowest responsive, responsible bidder refuses or fails to execute the Contract, the Owner may award the Contract to the third lowest responsive, responsible bidder. On the failure or refusal of such second or third lowest bidder to execute the Contract, each such bidder's bid securities shall be likewise forfeited to the Owner.

I.14. INTERPRETATIONS. All questions about the meaning or intent of the Contract Documents are to be directed to the Engineer. Interpretations or clarifications considered necessary by the Engineer in response to such questions will be issued by addenda mailed or delivered to all parties recorded by the Engineer as having received the Bidding Documents. Questions received less than 10 days prior to the date for opening of Bids may not be answered. Only questions answered by formal written addenda will be binding. Oral and other interpretations or clarifications will be without legal effect. Questions shall be addressed to:

Thomas M. Galeziewski
James M. Montgomery, Consulting Engineers, Inc.
9830 North 32nd Street, Suite B-110
Phoenix, Arizona 85208
Phone: (602)971-6091

I.15. LIQUIDATED DAMAGES. Provisions for liquidated damages if any, are set forth in the Supplemental General Conditions.

I.16. SUBSTITUTE OR "OR-EQUAL" ITEMS. The Contract, if awarded, will be on the basis of materials and equipment described in the Drawings or specified in the Specifications without consideration of possible substitute or "or-equal" items. Whenever it is indicated in the Drawings or specified in the Specifications that a substitute or "or-equal" item of material or equipment may be furnished or used by Contractor if acceptable to Engineer, application for such acceptance will not be considered by Engineer until after the effective date of the agreement. The procedure for submission of any such application by Contractor an consideration by Engineer is set forth in the General Requirements.

I.17. ADDENDUM. Any addenda issued during the time of bidding, forming a part of the documents received by the bidder for the preparation of his bid, shall be covered in the bid and shall be made a part of the contract.

I.18. ASSIGNMENT OF CONTRACT. No assignment by the Contractor of any contract to be entered into hereunder, or any part thereof, or of funds to be received thereunder by the Contractor, will be recognized by the Owner unless such assignment has had prior approval of the Owner and the Surety has been given due notice of such assignment in writing and has consented thereto in writing.

I.19. PLANS AND SPECIFICATIONS TO SUCCESSFUL BIDDER. The sucessful bidder may obtain five (5) sets of plans and specifications for this project from the City at no cost.

I.20. TIME OF COMPLETION. The Contractor shall commence work under this project on or before the tenth day following receipt of the Notice to Proceed for that project from the City of Glendale and shall fully complete all work under the project within ~~90~~ 120 consecutive calendar days from and including the date of receipt of such notice. The Contractor shall, at all time, during the continuance of the contract, prosecute the work with such force and equipment as is sufficient to complete all work within the time specified.

I.21. CITY OF GLENDALE TRANSACTION PRIVELEGE TAX. The City of Glendale transaction privilege tax shall be waived under the conditions of this contract; however, the Contractor shall be responsible for reporting and payment of all other county, state or federal taxes.

I.22. PRE-BID CONFERENCE. A pre-bid conference will be held at 10:00 a.m. on Tuesday, May 21, 1985, in the conference room at the Engineering Department, 5850 West Glendale Avenue, Glendale Arizona. Bidders, contractors, and other interested parties are invited to attend this conference which will be conducted by the Owner and Engineer to answer any questions.

I.23. 5% PREFERENTIAL AFFIDAVIT. Qualifying Contractors shall complete and submit a notarized statement, to accompany the bid, that business taxes have been paid in the State of Arizona in accordance with the terms and provisions of the Preference Statute, ARS-34-241, 34-242 and 34-243. The "5% Preferential Affidavit" form is included following the proposal for the purpose of qualification.

Contractors not completing the affidavit will be presumed to not qualify for 5% preference in accordance with Statutes.

- END OF INSTRUCTIONS TO BIDDERS -

BID FORMS

PROPOSAL

Place _____

Date _____

Proposal of _____,

a Corporation organized and existing under the laws of the State of _____;

a partnership consisting of _____;

or an individual trading as _____.

TO THE HONORABLE MAYOR AND COUNCIL
CITY OF GLENDALE
GLENDALE, ARIZONA

Gentlemen:

The undersigned hereby proposes and agrees to furnish any and all required labor, materials, construction equipment, transportation and services for the construction of:

Project: W823043E - Modifications to Glendale Well No. 8.,

in strict conformity with the plans and specifications for the following unit prices:

(Extension of these unit prices on the basis of estimated quantities and the totaling of these extensions are for the purpose of comparing bids only. The mathematics of such extensions and totaling will be checked and corrected by the Public Works/Engineering Department, before evaluating the bids, and the lowest of such corrected and checked totals will determine the lowest bids.)

NOTE: IN CASE OF DISCREPANCY, THE AMOUNT SHOWN IN WORDS SHALL GOVERN.

For Project No. W823043E

BID SCHEDULE

Pay Item No.	Unit and Approx. Quantities	DESCRIPTION UNIT BID PRICE IN WORDS	Unit Bid Price DOLLARS & CENTS	Amount Bid DOLLARS & CENTS
1.	1 L.S.	Mobilization, for the sum of: _____ and __ /100 Dollars per L.S.		
2.	1 L.S.	Well cleaning and test pumping, to include all equipment, materials, and labor necessary for cleaning, test pumping, performing a video survey, and disinfecting Well No. 8, for the sum of: _____ and __ /100 Dollars per L.S.		
3.	270 L.F.	Furnishing and installing 8-inch diameter asbestos cement pipe and fittings, specials, adapters, etc. complete in place. Payment to be per MAG Specification Section 610.18, (A) (2), and the bid item shall include all costs for thrust blocks and anchors, for the sum of: _____ and __ /100 Dollars per L.F.		
4.	260 L.F.	Furnishing and installing 8-inch diameter, Class 50, double thickness cement lined ductile iron pipe and fittings, specials, adapters, etc. complete in place. Payment to be per MAG spec. Section 610.18, (A) (2), and the bid item shall include all costs for thrust blocks and anchors, for the sum of: _____ and __ /100 Dollars per L.F.		
5.	185 L.F.	Furnishing and installing 4-inch diameter, Schedule 80, PVC pipe and fittings, specials, adapters, etc., complete in place. The bid item shall include all costs of excavation, removal of obstructions, bedding, backfilling, compaction, and testing, for the sum of: _____ and __ /100 Dollars per L.F.		
6.	10 L.F.	Furnishing and installing 4-inch diameter, standard weight, steel pipe and fittings, specials, adapters, etc., complete in place, for the sum of: _____ and __ /100 Dollars per L.F.		

For Project No. W823043E

BID SCHEDULE

Pay Item No.	Unit and Approx. Quantities	DESCRIPTION UNIT BID PRICE IN WORDS	Unit Bid Price DOLLARS & CENTS	Amount Bid DOLLARS & CENTS
7.	2 EA.	Furnishing and installing resilient seated solid wedge gate valves, for the sum of: _____ and ___/100 Dollars per EA.		
8.	1 EA.	Furnishing and installing an 8-inch diameter, swing check valve, for for the sum of: _____ and ___/100 Dollars per EA.		
9.	1 EA.	Furnishing and installing an 8-inch diameter backflow preventer, for the sum of: _____ and ___/100 Dollars per EA.		
10.	1 EA.	Furnishing and installing a 2-inch air vacuum and air release assembly, for the sum of: _____ and ___/100 Dollars per EA.		
11.	1 EA.	Furnishing and installing 8-inch, in-line propeller flow meter, (M-1), with indicator dial totalizer, & transducer, complete in place, for the sum of: _____ and ___/100 Dollars per EA.		
12.	1 EA.	Furnishing and installing 8-inch in-line propeller flow meter (M-2), with indicator dial and totalizer, complete in place, for the sum of: _____ and ___/100 Dollars per EA.		
13.	9 EA.	Furnishing and installing permanent concrete pipe support pedestals, complete in place, for the sum of: _____ and ___/100 Dollars per EA.		
14.	525 S.F.	Furnishing and installing a 6-inch thick concrete foundation pad, complete in place, for the sum of: _____ and ___/100 Dollars per S.F.		
15.	1 EA.	Installation of owner furnished pump control valve, including all fittings, piping, solenoids, pressure gauges, & wiring, complete in place, for the sum of: _____ and ___/100 Dollars per EA.		
16.	1 L.S.	Painting exterior, above grade, pipe surfaces, including all labor, equipment, and materials, for the sum of: _____ and ___/100 Dollars per L.S.		

For Project No. W823043E

BID SCHEDULE

Pay Item No.	Unit and Approx. Quantities	DESCRIPTION UNIT BID PRICE IN WORDS	Unit Bid Price DOLLARS & CENTS	Amount Bid DOLLARS & CENTS
17.	1 LS.	Furnishing and installing a submersible pump and motor unit, including bowl assembly, column piping, shaft, pitless unit, and other required appurtenances. Complete and in place for the sum of: _____ and __/100 Dollars per LS.		
18.	1 LS.	Furnishing and installing an electrical system, including all cabinets, wiring, junction boxes, cable, and other required items, complete as detailed, for the sum of: _____ and __/100 Dollars per LS.		
19.	1 LS.	Installing owner-furnished telemetry equipment, complete as detailed, for the sum of: _____ and __/100 Dollars per LS.		
20.	1 LS.	Furnishing and installing a chlorination system, including chlorinator, tanks, meters, gauges, piping, and other appurtenances as required for a complete operating system, for the sum of: _____ and __/100 Dollars per LS.		
21.	400 LBS.	Furnishing and installing miscellaneous cast iron fittings, for the sum of: _____ and __/100 Dollars per LBS.		
		TOTAL AMOUNT OF BID ITEMS 1 THROUGH 21 INCLUSIVE, FOR THE SUM OF: _____ and __/100 Dollars XXXXXXXXX		
		_____ and __/100 Dollars XXXXXXXX		

BID FORMS

PROPOSAL

The undersigned hereby declares that he has visited the site(s) and has carefully examined the contract documents relating to the work covered by the above bid or bids.

Upon receipt of notice of the acceptance of this bid, we will execute the formal contract attached within ten (10) days, and will deliver a one hundred percent (100%) Performance Bond for the faithful performance of this Contract, together with a one hundred percent (100%) Payment Bond.

The bid security attached, with endorsement, in the sum of five percent (5%) of the total bid, is to become the property of the City of Glendale, Arizona in the event the Contract and Bonds are not executed within the time set forth, as liquidated damages for the delay and additional work caused thereby.

The undersigned has checked carefully all the above figures and understands that the City of Glendale, Arizona, will not be responsible for any errors or omissions on the part of the undersigned in making up this bid.

The undersigned understands that the Mayor and Council of the City of Glendale, Arizona, reserves the right to reject any or all bids or to waive any informalities in the bid.

Respectfully submitted,

_____

Contractor

By _____

_____

_____

(Complete business address)

SEAL - if Bidder
a Corporation

Bidder shall signify receipt of all Addenda here (if any):

_____

BID FORMS

INFORMATION REQUIRED OF BIDDER

LIST OF SUBCONTRACTORS

The Bidder shall list below the name and business address of each subcontractor who will perform work under this Contract in excess of one-half of one percent of the Contractor's total bid price, and shall also list the portion of the work which will be done by such subcontractor. After the opening of bids, no changes or substitutions will be allowed except as otherwise provided by law. The listing of more than one subcontractor for each item of work to be performed with the words "and/or" will not be permitted. The bidder's attention is directed to the provisions of Paragraph entitled "Subcontract Limitations," of the Supplemental General Conditions which stipulates the percent of the work to be performed with the bidders own forces. Failure to comply with this requirement will render the bid nonresponsive and may cause its rejection.

Work to be performed	Subcontr. license if applicable	Percent of total contract	Subcontractor's name & address
1 _____	_____	_____	_____
			_____
2 _____	_____	_____	_____
			_____
3 _____	_____	_____	_____
			_____
4 _____	_____	_____	_____
			_____
5 _____	_____	_____	_____
			_____
6 _____	_____	_____	_____
			_____
7 _____	_____	_____	_____
			_____

Note: Attach additional sheets if required.

BID FORMS

INFORMATION REQUIRED OF BIDDER

EQUIPMENT/MATERIAL SOURCE INFORMATION

The Bidder shall indicate opposite each item of equipment or material listed below, the name of the manufacturer of the equipment or material proposed to be furnished under the bid. The listing of more than one manufacturer for each equipment/material to be furnished with the words "and/or" will not be permitted. Failure to comply with this requirement will render the bid nonresponsive and may cause its rejection.

Equipment/Material	Manufacturer
Submersible Pump & Motor	_____
Pitless Unit	_____
Flow Meters	_____
Gate Valves	_____
Check Valves	_____
Backflow Preventer	_____
Ductile Iron Pipe	_____
Asbestos Cement Pipe	_____
Chlorination Equipment	_____
	_____
	_____
	_____
	_____
	_____
	_____
	_____
	_____

BID FORMS

INFORMATION REQUIRED OF BIDDER

BIDDER'S GENERAL INFORMATION

The bidder shall furnish the following information. Failure to comply with this requirement will render the Bid non-responsive and may cause its rejection. Additional sheets shall be attached as required.

(1) Contractor's name and address:

_____

_____

_____

(2) Contractor's telephone number: _____

(3) Contractor's license (if applicable): _____

Primary classification: _____

State License No. _____ Supplemental

classifications held, if any: _____

(4) Number of years as a contractor in construction work of this type:__

(5) Names and titles of all officers of contractor's firm:

_____

_____

_____

_____

_____

(6) Name of person who inspected site of proposed work for your firm:

Name: _____ Date of Inspection: _____

(7) Name, address, and telephone number of surety company and agent who

will provide the required bonds on this contract: _____

_____

(8) ATTACH TO THIS BID the experience resume of the person who will be designated chief construction superintendent or on-site construction manager.

BID FORMS

INFORMATION REQUIRED OF BIDDER

BIDDER'S GENERAL INFORMATION

(9) ATTACH TO THIS BID a financial statement, references, and other information, sufficiently comprehensive to permit an appraisal of contractor's current financial condition.

(10) List 3 projects completed as of recent date involving work of similar type and complexity:

Project	Contract price	Name, address and telephone number of owner

BID FORMS

BID BOND
(Surety Bond)

KNOW ALL MEN BY THESE PRESENTS:

That we, _____ as Principal, (hereinafter called the Principal and the _____ _____, a corporation duly organized under the laws of the State of _____, as Surety, (hereinafter called the Surety), are held and firmly bound unto the City of Glendale, a municipal corporation as Obligee, in the sum of five percent (5%) of the total amount of the bid of Principal, submitted by him to the Mayor and Council of the City of Glendale, for the work described below, for the payment of which sum, well and truly to be made, the said Principal and the said Surety, bind ourselves, our heirs, executors, and administrators, successors and assigns, jointly and severally, firmly by these presents, and in conformance with A.R.S. 34-201.

WHEREAS, the said Principal is herewith submitting its proposal for PROJECT W823043E - Modifications to Glendale Well No. 8.

NOW, THEREFORE, if the City of Glendale shall accept the proposal of the Principal and the Principal shall enter into a contract with the City of Glendale, in accordance with the terms of such proposal and give such bonds and Certificates of Insurance as specified in the Standard Specifications with good and sufficient Surety for the faithful performance of such contract and for the prompt payment of labor and material furnished in the prosecution thereof, or in the event of the failure of the Principal to enter into such contract and give such Bond and Certificates of Insurance, if the Principal shall pay to the City of Glendale the sum of money set forth above as liquidated damages for failure of the Principal to enter into the contract, then this obligation shall be null and void, otherwise to remain in full force and effect.

Signed and sealed this _____ day of _____, A.D., 1985

_____
Principal

Witness:

_____
Title

_____

_____
Surety

Witness:

_____
Title

_____

BID FORMS

NON-COLLUSION AFFIDAVIT

(THIS FORM TO BE EXECUTED BY EACH BIDDER AND SUBMITTED WITH BID)

State of _____)
) SS
County of _____)

_____, being first

duly sworn, deposes and says that he is _____
(sole owner, a partner, president, secretary, etc.)

of _____,
the party making the foregoing bid; that such bid is not made in the interest of or on behalf of any undisclosed person, partnership, company association, organization , or corporation; that such bid is genuine and not collusive or sham; that said bidder has not directly or indirectly induced or solicited any other bidder to put in a false or sham bid, and has not directly or indirectly colluded, conspired, connived, or agreed with any bidder or anyone else to put in a sham bid, nor that anyone shall refrain from bidding; that said bidder has not in any manner, directly or indirectly, sought by agreement, communication, or conference with anyone to fix the bid price of said bidder or of any other bidder, nor to fix any overhead, profit, or cost element of such bid price, nor of that of any other bidder, nor to secure any advantage against the public body awarding the contract or anyone interested in the proposed contract; that all statements contained in such bid are true; and, further, that said bidder has not directly or indirectly, submitted his bid price or any breakdown thereof, nor the contents thereof, nor divulged information or data relative thereto, nor paid and will not pay fee in connection therewith to any corporation, partnership, company, association, organization, bid depository, nor to any member or agent thereof, nor to any other individual except to such person or persons as have a partnership or other financial interest with said bidder in his general business.

Signed: _____

Title: _____

Subscribed and sworn to before me this
_____ day of _____, 1985

_____
Notary Public

(SEAL)

AGREEMENT

THIS AGREEMENT, made and entered into this _____ day of _____, 1985, by and between the City of Glendale, Arizona, a municipal corporation, organized and existing under and by virtue of the laws of the State of Arizona, party of the first part, hereinafter designated the Owner, and _____

_____,

of the City of _____, County of _____,

and State of _____, party of the second part, hereinafter designated the Contractor.

WITNESSETH: That the said Contractor has covenanted, and agreed, for and in consideration of the payments made as provided for in the proposal and specifications, to the Contractor by the said Owner, and under the penalty expressed in the Bond hereto attached, at his proper cost and expense to do all the work and furnish all materials, tools, labor, and all appliances and appurtenances called for by the Agreement, free from all claims, liens and charges whatsoever, in the manner, and under the conditions hereinafter specified, that are necessary for the construction of:

PROJECT W823043E - Modifications to Glendale Well No. 8.

The work done and materials and equipment furnished shall be strictly pursuant to and in conformity with the specifications and plans. The specifications and drawings furnished by the Contractor with his proposal and the additional drawings or prints and other information to be furnished by the Contractor in accordance with the specifications are made a part of this Agreement when and as approved by the City of Glendale shall be complementary therewith. Any work appearing in or upon the one and not mentioned in the others shall be executed according to the true intent and meaning of the said specifications and plans, drawings, or prints the same as though the said work were contained and described in all.

The Notice Inviting Bids, Special Notice, Instructions to Bidders, General Conditions, Supplemental General Conditions, Technical Provisions, Proposal, Bid Bond, Payment Bond, Performance Bond, Appendix, Plans and Addenda thereto, are hereby understood to be a part of this Agreement.

It is further covenanted and agreed that the work shall be executed under the direction and supervision of the City of Glendale, Arizona, or its properly authorized agents, on whose inspection all work shall be accepted or rejected.

The City shall have full power to reject or condemn all materials furnished or work performed under this contract which do not conform to the terms and conditions herein expressed.

To prevent all disputes and litigation, it is further agreed by and between the said City of Glendale, Arizona, and said Contractor, that the Public Works/Engineering Department, City of Glendale, shall determine all questions

in relation to the work and the construction thereof, and it shall in all cases decide all questions which may arise relative to the execution of the work under this contract on the part of the said Contractor and its estimates and decisions shall be final and conclusive; and such estimates and decisions in case any question may arise, shall be a condition precedent to the right of said Contractor to receive any money or compensation for anything done or furnished under this contract.

IN WITNESS WHEREOF, four (4) identical counterparts of this contract, each of which shall for all purposes be deemed an original thereof, have been duly executed by the parties hereinabove named, on the date and year first herein written.

ATTEST:

CITY OF GLENDALE, ARIZONA
PARTY OF THE FIRST PART (OWNER)

(SEAL)

_____
City Clerk

_____

_____
Title

APPROVED: (AS TO FORM)

_____
City Attorney

WITNESSES:

_____
PARTY OF THE SECOND PART (CONTRACTOR)

_____

_____

_____
Title

PERFORMANCE BOND

STATUTORY PERFORMANCE BOND PURSUANT TO TITLE 34,
CHAPTER 2, ARTICLE 2, OF THE ARIZONA REVISED STATUTES
(Penalty of this bond must be 100% of the Contract Amount

KNOW ALL MEN BY THESE PRESENTS:

That, _____

(hereinafter called the Principal), as Principal, and _____

_____, a corporation organized and existing under the laws of the State of _____ with its principal office in the City of _____, (hereinafter called the Surety), as Surety, are held and firmly bound unto the City of Glendale, a municipal corporation, (hereinafter called the Obligee), in the amount of _____ _____ Dollars ($_____), for the payment whereof; the said Principal and Surety bind themselves, and their heirs, administrators, successors and assigns, jointly and severally, firmly by these presents.

WHEREAS, The Principal has entered into a certain written Agreement with the Obligee, dated the _____ day of _____, 1985, to construct Project W823043E - Modifications to Glendale Well No. 8, which Agreement is hereby referred to and made a part hereof as fully and to the same extent as if copied at length herein.

NOW, THEREFORE, THE CONDITION OF THIS OBLIGATION IS SUCH, that if said Principal shall faithfully perform and fulfill all the undertakings, covenants, terms, conditions and agreements of said Agreement during the original term of said Agreement and any extension thereof, with or without notice to the Surety, and during the life of any guaranty required under the Agreement and shall also perform and fulfill all the undertakings, covenants, terms, conditions, and agreements of any and all duly authorized modifications of said Agremeent that may hereafter be made, notice of which modifications to the Surety being hereby waived; then the above obligation shall be void, otherwise to remain in full force and effect.

PROVIDED, HOWEVER, that this bond is executed pursuant to the providions of title 34, Chapter 2, Article 2, of the Arizona Revised Statutes and all liabilities on this bond shall be determined in accordance with the provisions of said Title, Chapter, and Article, to the extent as if it were copied at length herein.

PERFORMANCE BOND

The prevailing party or any party which recovers judgment on this bond shall be entitled to such reasonable attorney's fees as may be fixed by the Court or a judge thereof.

Witness our hands this _____ day of _____, 1985

_____
Principal Seal

By: _____

_____
Surety Seal

By: _____

_____
Agency of Record

_____
Agency Address

PAYMENT BOND

STATUTORY PAYMENT BOND PURSUANT TO TITLE 34,
CHAPTER 2, ARTICLE 2, OF THE ARIZONA REVISED STATUTES
(Penalty of this bond must be 100% of the Contract Amount)

KNOW ALL MEN BY THESE PRESENTS:

That, _____

(hereinafter called the Principal), as Principal, and _____

_____, a corporation organized and existing under the laws of the State of _____ with its principal office in the City of _____, (hereinafter called the Surety), as Surety, are held and firmly bound unto the City of Glendale, a municipal corporation, (hereinafter called the Obligee) in the amount of _____Dollars ($_____), for the payment whereof; the said principal and Surety bind themselves, and their heirs, administrators, successors and assigns, jointly and severally, firmly by these presents.

WHEREAS, the Principal has entered into a certain written Agreement with the Obligee, dated the _____ day of _____, 1985, to construct Project W823043E - Modifications to Glendale Well No. 8, which Agreement is hereby referred to and made a part hereof as fully and to the same extent as if copied at length herein.

NOW, THEREFORE, THE CONDITION OF THIS OBLIGATION IS SUCH, that if the said Principal shall promptly pay all monies due to all persons supplying labor or materials to him or his sub-contractors in the prosecution of the work provided for in said Agreement, then this obligation shall be void, otherwise to remain in full force and effect.

PROVIDED, HOWEVER, that this bond having been required of the said Principal in order to comply with the provisions of Title 34, Chapter 2, Article 2, of the Arizona Revised Statutes, all rights and remedies on this bond shall inure solely to such persons and shall be determined in accordance with the provisions, conditions, and limitations of said Title, Chapter and Article, to the same extent as if they were copied at length herein.

PAYMENT BOND

The prevailing party or any party which recovers judgment on this bond shall be entitled to such reasonable attorney's fees as may be fixed by the court or a judge thereof.

Witness our hands this _____ day of _____, 1985

_____
Principal Seal

By: _____

_____
Surety Seal

By: _____

_____
Agency of Record

_____
Agency Address

CERTIFICATE OF INSURANCE

CITY OF GLENDALE, ARIZONA
PUBLIC WORKS/ENGINEERING DEPARTMENT
CERTIFICATE OF INSURANCE

The _____
certifies that the following insurance policies have been issued on behalf of

Name of Insured _____

Address of Insured _____

Name and Address of Additional Named Insured: City of Glendale, Arizona
5850 West Glendale Avenue
Glendale, Arizona 85301

Type of Insurance	Policy No.	Eff. Date	Exp. Date	Limits of Liability
(1) Workmen's Compensation				Statutory
(2) Contractors Protective Bodily Injury				$500,000 ea. accid.
(2) Contractor(s) Protective Property Damage				$100,000 ea. accid. $100,000 aggregate
(3) Contractual Bodily Injury				$500,000 ea. occur.
(3) Contractual Property Damage				$100,000 ea. accid. $100,000 aggregate
(4) Automobile Bodily Injury and Property Damage				$500,000 ea. occur.

When the property includes construction of a new, or modification of an existing building (in addition to the above types):

(5) Fire and Extended Coverage plus Vandalism and Malicious Mischief - for the Full Amount of the Contract.

Policy No. Eff. Date Exp. Date

Policy Includes Coverage For:

(1) a. Damage caused by blasting.
b. Damage caused by collapse or structural injury.
c. Damage to underground utilities.

(2) Liability assumed in construction agreements and other types of contracts or agreements in effect in connection with insured operations.

(3) All owned, hired or non-owned automotive equipment used in connection with the insured operation.

CERTIFICATE OF INSURANCE

It is agreed that none of these policies will be cancelled or changed so as to affect this certificate until thirty (30) days written notice of such cancellation or change has been delivered to the City of Glendale.

It is further agreed that:

These policies shall not expire until all work has been completed and the project has been accepted by the City of Glendale. (If a policy does expire during the life of the Contract, a renewal Certificate of the required coverage must be sent to the City of Glendale not less than five (5) days prior to expiration date.) The Contractor hereby agrees to indemnify and save harmless the City of Glendale and any jurisdiction or agency issuing permits for any work included in the project, their officers, agents and representatives from all suits, actions, loss, damage, expense, cost, or claims of any character or any nature brought on account of any injuries sustained by any person or property arising out of the work done in fulfillment of the construction of the improvement under the terms of this agreement, or on account of any act or omission by the Contractor or his agents, or from any claims or amounts arising or recovered under Workmen's Compensation laws or any other law, by-law, ordinance, or order or decree.

This Certificate is not valid unless countersigned by an authorized representative of the Insurance Company.

Countersigned by

Date: _____

_____

_____

Signature

5% PREFERENTIAL AFFIDAVIT
For Resident Bidders Only

This affidavit form is for the use of Bidders who are able to qualify under Section 34-241 of the Arizona Revised Statutes.

State of Arizona,

County of _____.

_____ being first duly sworn, upon his oath deposes and says:

That he is _____ of the _____
(Title) (Company/Corporation)

_____ and that he makes this affidavit for and on behalf of said Company/Corporation being thereunto duly authorized; that in connection with the tender of bid to furnish labor, materials, construction equipment, transportation and services, for construction of Project W823043E - Modifications to Glendale Well No. 8, for the City of Glendale, Arizona.

The affiant certifies and declares that _____
(Company/Corporation)

_____
(Address)

has fully complied with the terms and provisions of the Arizona Revised Statutes, and by virtue of such compliance is entitled to the 5% preference authorized thereunder; that he makes this affidavit in order to induce the granting of the said 5% preference in connection with the hereinbefore described bid.

Signed and dated at _____, this _____ of _____, 1985.

_____
Contractor

By _____

STATE OF ARIZONA)
) SS
COUNTY OF MARICOPA)

Subscribed and sworn to by _____ before me

this _____ day of _____, 1985.

_____
Notary Public

My commission expires: _____

CONTRACTOR'S AFFIDAVIT REGARDING SETTLEMENT OF CLAIMS

CITY OF GLENDALE, ARIZONA
PUBLIC WORKS/ENGINEERING DEPARTMENT

CONTRACTOR'S AFFIAVIT REGARDING
SETLEMENT OF CLAIMS

Project W923043E - Modifications to Glendale Well No. 8.

To the City of Glendale, Arizona

Gentlemen:

This is to certify that all lawful claims for materials, rental of equipment and labor used in connection with the construction of the above project, whether by subcontractor or claimant in person, have been duly discharged.

The undersigned, for the consideration of $_____, as set out in the final pay estimate, as full and complete payment under the terms of the contract, hereby waives and relinquishes any and all further claims or right of lien under, in connectin with, or as a result of the above described project. The undersigned further agrees to indemnify and save harmless the City of Glendale against any and all liens, claims of liens, suits, actions, damages, charges and expenses whatsoever, which said City may suffer arising out of the failure of the undersigned to pay for all labor performance and materials furnished for the performance of said installation.

Signed and dated at _____, this _____

day of _____, 1985.

_____
Contractor

By _____

STATE OF ARIZONA)
) SS
COUNTY OF MARICOPA)

The foregoing instrument was subscribed and sworn to before me this _____

day of _____, 1985.

_____
Notary Public

My commission Expires _____

CONDITIONS OF THE CONTRACT

GENERAL CONDITIONS

ARTICLE 1 - DEFINITIONS

1.01 OWNER

The word "Owner" shall mean the entity so named in the Contract Documents, and who is referred to throughout the Contract Documents as singular in number and masculine in gender. The term Owner shall mean the Owner or his authorized representatives. All necessary action by Owner pertaining to the Contract will be taken by legally constituted authorities empowered to act on behalf of the Owner.

1.02 ENGINEER

The word "Engineer" shall mean the individual or firm authorized by the Owner to oversee the execution of this Contract, acting either directly or through properly authorized agents, each agent acting only within the scope of authority delegated to him by the Engineer. The responsibility of the Engineer under this Contract shall be limited and does not include responsibility for the superintendence of construction processes, site conditions, operations, equipment, personnel, or the maintenance of a safe place to work or any safety in, on, or about the site of the work.

1.03 RESIDENT PROJECT REPRESENTATIVE

The words "Resident Project Representative" shall mean the individual authorized by the Engineer to provide construction surveillance and administer the execution of the construction phase of this Contract, acting either directly or through properly authorized agents, each agent acting only within the scope of authority delegated to him by the Engineer. The responsibility of the Resident Project Representative under this Contract shall not include responsibility for the superintendence of the construction process, site conditions, operations, equipment, personnel, or the maintenance of a safe place to work or any safety in, on, or about the site of the work. Where a Resident Project Representative is provided at the site of the work, said person shall be the sole authorized representative of the Owner and the Engineer in all on-site relations with the Contractor.

1.04 CONTRACTOR

The word "Contractor" shall mean the party entering into Contract with the Owner for performance of the work called for in the Contract Documents, including the Contractor's authorized agents.

1.05 SUBCONTRACTOR

The word "Subcontractor" shall mean any person, firm, or corporation entering into agreement with the Contractor for performance of any part of the Contractor's obligation under the Contract, and whose contractual obligations are with the Contractor and not with the Owner.

1.06 CONTRACT

The word "Contract" shall mean the agreement between the Owner and the Contractor for the satisfactory performance of the construction work indicated on the drawings and specified herein and the consideration therefor, all as evidenced by the Contract Documents.

1.07 CONTRACT DOCUMENTS

The Contract Documents shall comprise the following documents: the Notice Inviting Bids, Instructions to Bidders, Bid Forms (including the Proposal, Bid Schedule(s), Information Required of Bidder data sheets, Bid Bond, and all required certificates and affidavits), Agreement, Performance Bond, Payment Bond, General Conditions, Supplemental General Conditions, Technical Provisions, Drawings, and all addenda and change orders executed pursuant to the provisions of the Contract.

1.08 SPECIFICATIONS

The word "Specifications" shall mean that portion of the Contract Documents comprising the Notice Inviting Bids, Instructions to Bidders, Bid Forms (including the Proposal, Bid Schedule(s), Information Required of Bidder data sheets, Bid Bond, and all required certificates and affidavits), General Conditions, Supplemental General Conditions, Technical Provisions and all addenda and change orders executed pursuant to the provisions of the Contract.

1.09 DRAWINGS; CONTRACT DRAWINGS

The words "Drawings" or "Contract Drawings" shall mean that portion of the Contract Documents comprising all drawings, plans, maps, profiles, diagrams, or other graphic representation delineating the location, nature, extent, and form of the work, together with applicable details and all addenda and change orders executed pursuant to the provisions of the Contract.

1.10 DATE OF COMPLETION

Completion of the work as referred to herein shall mean substantial completion. Such substantial completion of a project or specified area or part of a project occurs when the construction is sufficiently completed, in accordance with the Contract Documents, as modified by any change orders agreed to by the parties, so that the Owner can occupy or utilize the project or specified area or part of the project for the use and purpose for which it was intended. The Contractor shall not be relieved by issuance of a Notice of Completion from meeting all of the requirements of the Contract Documents, and is further obligated to complete or correct all outstanding items of work listed on any attachments to the Notice of Completion within the time specified thereon. The date of completion shall be the date of execution of the Notice of Completion by the Owner at the time of substantial completion of the work.

1.11 CONTRACT PRICE

The words "Contract Price" shall mean the total monies payable by the Owner to the Contractor under the terms and conditions of the Contract Documents.

1.12 CONTRACT TIME

The words "Contract Time" shall mean the number of calendar days stated in the Contract Documents for the completion of the work.

1.13 CHANGE ORDER

The words "Change Order" shall mean a document recommended by the Engineer, which is signed by the Contractor and the Owner and authorizes an addition, deletion, or revision in the work, or an adjustment in the Contract Price or the Contract Time issued on or after the date of execution of the Agreement.

1.14 FIELD ORDER

The words "Field Order" shall mean a written order issued by the Engineer with the approval of the Owner, which orders changes in the work in accordance with Paragraph 5.02 "Changes" but which does not necessarily involve a change in the Contract Price or the Contract Time. If the Contractor believes that a Field Order justifies an increase in the Contract Price and/or an extension of Contract Time and the parties are unable to agree as to the amount or extent thereof, the Contractor may file a protest and make a claim therefor as provided in Paragraph 3.06 "Claims and Protests."

1.15 NOTICE OF AWARD

The words "Notice of Award" shall mean the written notice by the Owner to the apparent successful bidder stating that upon compliance by the apparent successful bidder with the conditions precedent enumerated therein within the time specified, the Owner will enter into an Agreement.

1.16 NOTICE TO PROCEED

The words "Notice to Proceed" shall mean the written notice issued by the Owner to the Contractor authorizing him to proceed with the work and establishing the date of commencement of the Contract Time.

1.17 BID

The word "bid" shall mean the offer or proposal of the bidder submitted on the prescribed form setting forth the prices for the work to be performed.

1.18 UNDERGROUND FACILITIES

The words "Underground Facilities" shall mean all pipelines, conduits, ducts, cables, wires, manholes, vaults, tanks, tunnels, or other such facilities or

attachments and any encasements containing such facilities which have been installed underground to furnish any of the following services or materials: electricity, gas, steam, liquid petroleum products, telephone or other communications, cable television, sewage and drainage removal, traffic or other control systems, or water.

ARTICLE 2 - SPECIFICATIONS, DRAWINGS, AND RELATED DATA

2.01 INTENT OF CONTRACT DOCUMENTS

The intent of the Contract Documents is that the Contractor furnish all plant, labor, materials, equipment, and services, except as may be specifically noted otherwise, which are required or necessary to fully complete the work.

2.02 SPECIFICATIONS AND DRAWINGS COMPLEMENTARY

The Specifications and Drawings are complementary and what is called for in one shall be as binding as if called for in both.

2.03 DISCREPANCIES IN THE CONTRACT DOCUMENTS

Any discrepancies, conflicts, errors, or omissions found in the Contract Documents shall be promptly reported to the Engineer who will issue a correction in writing. The Contractor shall not take advantage of any such discrepancies, conflicts, errors, or omissions, but shall comply with any corrective measures regarding the same prescribed by the Engineer.

2.04 ORDER OF PRECEDENCE OF CONTRACT DOCUMENTS

In resolving conflicts resulting from conflicts, errors, or discrepancies in any of the Contract Documents, the order of precedence shall be as follows:

1. Agreement
2. Specifications
3. Drawings

Within the Specifications the order of precedence is as follows:

1. Addenda/Change orders
2. Contractor's Bid (Bid Form)
3. Supplemental General Conditions
4. Notice Inviting Bids
5. Instructions to Bidders
6. General Conditions
7. Technical Provisions
8. Referenced Standard Specifications

With reference to the Drawings the order of precedence is as follows:

1. Figures govern over scaled dimensions
2. Detail drawings govern over general drawings
3. Addenda/change order drawings govern over Contract Drawings
4. Contract Drawings govern over standard drawings
5. Contract Drawings govern over shop drawings

2.05 REFERENCE TO STANDARDS OR PUBLICATIONS

Any reference made in the Contract Documents to any specification, standard, or publication of any organization shall, in the absence of a specific designation to the contrary, be understood to refer to the latest edition of the specification, standard, or publication in effect as of the date of advertising the work, except to the extent that said standards or publications may be in conflict with applicable laws, ordinances, or governing codes. No requirements of these specifications or the drawings shall be waived because of any provisions of, or omission from, said standards or publications.

2.06 REFERENCES TO PROPRIETARY PRODUCTS

(a) Where references to proprietary products appear in the Contract Documents, whether or not followed by the words "or equal," it is for the purpose of establishing an acceptable standard of quality or design. Unless a substitute is expressly prohibited, the Contractor may request approval of a substitute for any such proprietary product within the 60 calendar days provided in Section entitled "Contractor Submittals" of the Technical Provisions. Such approval will not be given by the Engineer prior to award of a Contract. A request for substitution must be in writing and must include descriptive literature, specifications, test reports, or samples, as appropriate, to enable the Engineer to determine the acceptability of the product proposed for substitution. If substitution is requested as part of the Contractor's submittal of a proposed alternative product, the item(s) proposed for substitution shall be clearly indicated. No substitute product shall be used on the work until written approval has been received from the Engineer. Any revisions to structures, piping, mechanical, electrical, instrumentation, or any other work made necessary by such substitution must be submitted for the approval of the Engineer and the entire cost of these revisions shall be borne by the Contractor.

(b) Where a particular type or model number for an item of equipment is specified in addition to a word description of the item, it shall be understood that the word description shall take precedence, and the call out of type or model number is made solely for the convenience of the Contractor and no limit, restriction, or direction is indicated or intended thereby, nor is the accuracy or reliability of such type or model number guaranteed.

2.07 CONTRACT DOCUMENTS FURNISHED TO CONTRACTOR

The Owner will furnish to the Contractor 5 sets of the Contract Documents, including Specifications together with reduced drawings, if any, and 5 sets of full-scale Drawings. Additional quantities of the Contract Documents will be furnished at reproduction cost.

ARTICLE 3 - ENGINEER-OWNER-CONTRACTOR RELATIONS

3.01 ENGINEER'S AUTHORITY

(a) The Engineer shall have final technical authority on matters concerning (1) all questions which may arise as to the quality and acceptability of proposed substitute materials or equipment; (2) interpretation of Contract Documents; (3) review of all Contractor submittals, i.e., shop drawings, samples, and similar design-related items; (4) technical review authority over all design-related change orders; and (5) all questions as to the acceptable fulfillment of the Contract by the Contractor.

(b) During the construction phase, the Engineer shall have final technical authority on matters concerning (1) the quality and acceptability of materials and equipment furnished to meet the provisions of the Contract Documents; (2) acceptability of the rate of progress of the work; (3) review of quantities of work performed by the Contractor for pay purposes; (4) technical review of over all construction-related change orders which do not alter the project design; and (5) Contract Administration.

(c) Where a Resident Project Representative is provided at the site of the Work, said Resident Project Representative shall serve as the sole Owner/Engineer contact with the Contractor during the construction phase, and all submittals and communications between the Engineer and the Contractor and between the Owner and the Contractor shall be handled by utilizing the Resident Project Representative as their contact representative.

(d) Any differences relating to the Contract which may arise between the Contractor and any other prime contractors on the Project will be mediated by the Engineer; however, the Engineer will not mediate disputes between the Contractor and his subcontractors or suppliers.

3.02 LEGAL ADDRESS OF CONTRACTOR

The address given in the form entitled Information Required of Bidder is hereby designated as the place to which all notices, letters, and other communications to the Contractor will be mailed or delivered. The mailing or delivering to said address of any notice, letter, or other communication shall be deemed sufficient service thereof upon the Contractor. The date of such service shall be the date of such mailing or delivery. Said address may be changed at any time by a written notice signed by the Contractor and delivered to the Engineer.

3.03 CONTRACTOR'S DAILY REPORTS

Except where otherwise provided, the Contractor shall complete a daily report indicating manpower, major equipment, subcontractors, etc., involved in the performance of the work. The daily report shall be completed on forms prepared by the Contractor and approved by the Engineer, and shall be submitted to the Engineer at the conclusion of each work day.

3.04 RIGHTS-OF-WAY

(a) Lands or rights-of-way for the work to be constructed under the Contract

will be provided by the Owner as shown on the Drawings. Nothing contained in the Contract Documents shall be interpreted as giving the Contractor exclusive occupancy of the lands or rights-of-way provided. Any additional lands or rights-of-way required for construction operations shall be provided by the Contractor at his own expense; provided, that the Contractor shall not enter upon nor use any property not under the control of the Owner until a written temporary construction easement agreement has been executed, and a copy of said easement furnished to the Engineer prior to said use; and, neither the Owner nor the Engineer shall be liable for any claims or damages resulting from the Contractor's unauthorized trespass or use of any such properties.

(b) Except as may otherwise be provided, the Contractor shall secure, from the agencies having jurisdiction, the necessary permits to create obstructions, to make excavations if required under the Contract, and to otherwise encroach upon rights-of-way, and present evidence to the Engineer that such permission has been granted, before work is commenced. Regulations and requirements of all agencies concerned shall be strictly adhered to in the performance of this Contract, including the furnishing of insurance and bonds if required by such agencies. The enforcement of such requirements under this Contract shall not be made the basis for claims for additional compensation.

(c) The Contractor shall not do any work that would affect any oil, gas, sewer, or water pipeline; any telephone, telegraph, or electric transmission line; any fence; or any other structure, nor shall the Contractor enter upon the rights-of-way involved until notified by the Engineer that the Owner has secured authority therefor from the proper party. After authority has been obtained, the Contractor shall give said party due notice of his intention to begin work, and shall give said party convenient access and every facility for removing, shoring, supporting, or otherwise protecting such pipeline, transmission line, ditch, fence, or structure, and for replacing same. When 2 or more contracts are being executed at one time on the same or adjacent land in such manner that work on one contract may interfere with that on another, the Owner shall decide which contractor shall cease work, and which shall continue, or whether the work on both contracts shall progress at the same time, and in what manner. When the territory of one contract is the necessary or convenient means of access for the execution of another contract, such privilege of access or any other reasonable privilege may be granted by the Owner to the Contractor so desiring, to the extent, amount, in the manner, and at the times permitted. No such decision as to the method or time of conducting the work or the use of territory shall be made the basis of any claim for delay or damage, except as provided for temporary suspension of the work in Paragraph 3.11, hereof.

(d) Lands to be furnished by the Owner for camp sites, construction operations, concrete aggregate pits, roads, and other purposes will be specifically shown on the drawings or provided for in the Technical Provisions. Should the Contractor find it necessary to use any additional land for his camp or for other purposes during the construction of the work, he shall provide for the use of such lands at his own expense.

3.05 CONTRACTOR'S OBLIGATIONS

(a) The Contractor, at his own sole cost and expense, shall perform all labor and services and furnish all the materials, tools, and appliances, except as hereinafter otherwise definitely provided, necessary or proper for performing and completing the work required by the Contract Documents, in the manner and within the time stipulated in the Technical Provisions. He shall furnish, erect, maintain, and remove the construction plant and such temporary works as may be required. The Contractor alone shall be responsible for the safety, efficiency, and adequacy of his plant, appliances, and methods, and for any damage which may result from their failure or their improper construction, maintenance, or operation. All the labor and materials shall be performed and furnished strictly pursuant to and in conformity with the Contract Documents, the lines and grades and other directions of the Engineer as given from time to time during the progress of the work under the terms of the Contract, and in accordance with working drawings to be furnished from time to time as provided herein. The Contractor shall complete the entire work in accordance with the Contract Documents and at the prices fixed in the Contract. The amount of any applicable sales or use tax imposed by the State or any political subdivision or municipality thereof, shall be included in the prices named in the Bidding Schedule(s).

(b) A technically qualified English-speaking supervisor or superintendent, shall be designated in writing as the Contractor's representative at the site, and who shall supervise or superintend the work and shall provide competent supervision of the work until its completion. The supervisor or superintendent shall have full authority to act in behalf of the Contractor; and all directions given by the Engineer to said supervisor or superintendent shall be considered as having been given to the Contractor. If said supervisor or superintendent is not present on that part of the work where the Engineer desires to give instructions, such instructions may be given by the Engineer to the foreman in charge of the particular work to which the instructions apply. Such instructions given to a foreman likewise shall be considered given to the Contractor. Such instructions given by the Engineer to the said supervisor or superintendent or to a foreman, will be confirmed in writing. All instructions and directions given by the Engineer will be limited to matters properly falling within the Engineer's authority as specified in Paragraph 3.01, herein.

(c) The Contractor's supervisor or superintendent shall be present at the site of the work at all times while work under the Contract is in progress. Failure to observe this requirement shall be considered as suspension of the work by the Contractor, until such time as such supervisor or superintendent is again present at the site. No payment will be allowed for any work performed in the absence of such supervisor or superintendent. Work performed in violation of these provisions is subject to removal and reconstruction or reinstallation. No extensions of time will be granted, nor will additional payment be allowed for any costs to the Contractor of slowdown, delays, idled equipment, or any other costs incurred by the Contractor as the direct or indirect result of such suspension. If in the normal conduct of the business of the Contractor it may become necessary for the designated

supervisor or superintendent to leave the site of the work for any reason, the Contractor shall provide an authorized alternate, and a written notice thereof shall be provided to the Engineer prior to any such absence. Whenever the work is defined as being suspended under the provisions of this Paragraph any such suspension in excess of 60 days shall be just cause for the Owner to terminate the Contract under the provisions of Paragraph 3.14, herein.

3.06 CLAIMS AND PROTESTS

(a) If the Contractor considers any work demanded of him to be outside the requirements of the Contract, or if he considers any order, instruction, or decision of the Engineer or his Resident Project Representative, or of any inspector to be unfair, he shall, immediately upon receipt of such order, instruction, or decision, ask for a written confirmation of the same. Upon receipt of written confirmation, the Contractor shall proceed without delay to perform the work or to conform to the order, instruction, or decision; but, unless the Contractor finds such order, instruction, or decision satisfactory, he shall within 10 calendar days after receipt of same, file a written protest with the Engineer, stating clearly and in detail his objections and the reasons therefor.

(b) Any decision, order, instructions, notice, or act or omission of the Engineer as to which the Contractor has submitted a protest shall be final and conclusive on the Contractor if he fails to submit or document a statement of his factual and legal contentions with respect thereto in the manner and within the times above specified prior to the date of the Notice of Completion, and such failure shall constitute a waiver of all claims in connection therewith, whether direct or consequential in nature. However, the Engineer may, if the Contractor shows good cause and if the interests of the Owner will not be prejudiced, consider and decide a properly documented protest on its merits notwithstanding the Contractor's failure to submit it within the time above stated. The foregoing provision shall create no right in the Contractor, and failure or refusal of the Engineer to exercise his authority thereunder shall not be subject to claim by the Contractor.

(c) All protests under this Paragraph will be disposed of by agreement between the Engineer and the Contractor; except, that when agreement cannot be reached, the protest will be disposed of by the Engineer's decision. The Contractor will be informed of the Engineer's decision within 30 calendar days after the Contractor last submits data pertinent to the protest as provided for in Paragraph 3.06(a), and (b), herein. The Engineer's decision shall be final and conclusive; provided, that the Contractor's right to seek relief as provided in Paragraph 3.06(e), herein, shall not be prejudiced thereby for all claims submitted to the Engineer prior to execution by the Owner of a Notice of Completion. Failure of the Contractor to submit all claims to the Engineer prior to execution of said Notice of Completion shall constitute a waiver by the Contractor of all such claims, and the decision of the Engineer shall be final and binding upon the Contractor.

(d) In all matters concerning the validity, interpretation, performance, effect or otherwise of the Contract, the laws of the State in which the

project is located shall govern and be applicable. Pending final disposition of a protest, the Contractor shall proceed diligently with the performance of the Contract and in accordance with the Engineer's decision as applicable.

(e) It shall be understood and agreed that if a claim or protest is made in accordance with the foregoing provisions, and the Contractor refuses to accept the decision of the Engineer as final, the matter may be disposed of either by litigation or upon mutual agreement of the parties, by arbitration. In those states having statutes enforcing agreements to arbitrate existing construction controversies and any that may arise in the future, the dispute may then be settled by arbitration in accordance with the provisions of Paragraph 3.07 herein. In the remaining states, any agreement to arbitrate shall be determined at the time a controversy arises.

3.07 ARBITRATION

Where permitted by law all claims, disputes, and other matters in question between the Contractor and the Owner arising out of, or relating to, the Contract Documents or the breach thereof, except as provided in Paragraph 3.06, herein, and except for claims which have been waived by the making or acceptance of final payment as provided by Paragraph 5.10, may be decided by arbitration. If binding arbitration is required, it shall conform to the requirements specified in the Supplemental General Conditions.

3.08 INSPECTION AND TESTING

(a) All materials furnished and all work performed under the Contract shall be subject to review by the Engineer. Such review may include mill, plant, shop, or field inspection as required. The Engineer shall be permitted access to all parts of the work, including plants where materials or equipment are manufactured or fabricated, and shall be furnished with such materials, information and assistance by the Contractor and his subcontractors and suppliers as is required to make a complete and detailed inspection.

(b) Work done in the absence of prescribed inspection may be required to be removed and replaced under the proper inspection, and the entire cost of removal and replacement, including the cost of all materials which may be furnished by the Owner and used in the work thus removed, shall be borne by the Contractor, regardless of whether the work removed is found to be defective or not. Work covered up without the authority of the Engineer, shall, upon order of the Engineer, be uncovered to the extent required, and the Contractor shall similarly bear the entire cost of performing all the work and furnishing all the materials necessary for the removal of the covering and its subsequent replacement.

(c) Except as otherwise provided herein, the cost of review and inspection will be paid by the Owner. All inspection fees imposed by public agencies other than the Owner shall be paid by the Contractor.

(d) The Engineer will make, or have made, such inspections and tests as he deems necessary to see that the work is being accomplished in accordance with

the requirements of the Contract. Unless otherwise specified in the Supplemental General Conditions, the cost of such inspection and testing will be borne by the Owner. In the event such inspections or tests reveal non-compliance with the requirements of the Contract, the Contractor shall bear the cost of such corrective measures deemed necessary by the Engineer, as well as the cost of subsequent reinspection and retesting. It shall be understood and agreed that the inspection or making of tests shall not constitute an acceptance of any portion of the work nor relieve the Contractor from compliance with the terms of the Contract.

3.09 ASSIGNMENT FORBIDDEN

The Contractor shall not assign, sublet, sell, transfer, or otherwise dispose of the Contract or any portion thereof, or his right, title, or interest therein, or his obligations thereunder, without the written consent of the Owner. If the Contractor violates this provision, the Contract may be terminated at the option of the Owner. In such event, the Owner shall be relieved of all liability and obligations to the Contractor and to his assignee or transferee, growing out of such termination.

3.10 SUBCONTRACT LIMITATIONS

(a) Pursuant to the Supplemental General Conditions, subcontracts will be permitted to such extent as shall be shown to be necessary or advantageous to the Contractor in the prosecution of the work and without injury to the Owner's interests. The resubletting of work by a subcontractor shall be subject to the same limitations as an original subletting. Each subcontractor shall be properly licensed for the type of work which he is to perform.

(b) A copy of each subcontract, if in writing (or if not in writing, then a written statement signed by the Contractor giving the name of the subcontractor and the terms and conditions of each subcontract), shall be filed promptly with the Engineer upon the Engineer's request. Each subcontract shall contain a reference to the Agreement and the General and Supplemental General Conditions of the Contract between the Owner and the Contractor, and the terms of said agreement and conditions of the Contract shall be made a part of each subcontract insofar as applicable to the work covered thereby. Each subcontract shall provide for annulment of same by the Contractor upon written order of the Engineer, if, in the Engineer's opinion, the Subcontractor fails to comply with the requirements of the prime Contract insofar as the same may be applicable to this work.

(c) The Contractor shall be responsible to the Owner and Engineer for the acts and omissions of his subcontractors and their employees to the same extent as he is responsible for the acts and omissions of his own employees. Nothing contained in this Section shall create any contractual relationship between any subcontractor and the Owner or Engineer nor relieve the Contractor of any liability or obligation under the prime Contract.

3.11 TEMPORARY SUSPENSION OF WORK

(a) GENERAL. The Owner acting through the Engineer may, by written notice to the Contractor, temporarily suspend the work, in whole or in part, for such period or periods as Owner may deem necessary. Suspended work shall be resumed by the Contractor within 10 calendar days of receipt from the Engineer of written notice to proceed.

(b) EFFECTIVE DATE. Such suspension shall be effective upon receipt by the Contractor of the written order suspending the work and shall be terminated upon receipt by the Contractor of the written order terminating the suspension.

(c) ADJUSTMENT OF TIME. If the Contractor is delayed in completion of the work beyond the time named in the Contract Documents for the completion of the work, by acts of God or of the public enemy, fire, floods, epidemics, quarantine restrictions, strikes, labor disputes, shortage of materials, sabotage, or freight embargoes, the Contractor shall be entitled to an adjustment in the time of completion. No such adjustment will be made unless the Contractor shall notify the Engineer in writing of the causes of delay within 10 calendar days from the beginning of any such delay. The Engineer shall ascertain the facts and the extent of the delay. No adjustment in time shall be made for delays resulting from noncompliance with the Contract and the occurrence of such shall not relieve the Contractor from the necessity of maintaining the required progress.

(d) In the event that Contract completion is delayed beyond the time named in the Specifications by reason of shortages of Contractor-furnished materials, the Contractor shall be entitled to an adjustment in the time of completion; provided, however, that the Contractor shall furnish documentation acceptable to the Engineer that he placed or attempted to place firm orders with suppliers a reasonable time in advance of the required date of delivery of the materials in question, that such shortages shall have developed following the date such orders were placed or attempts made to place same, that said shortages are general throughout the affected industry, and that the Contractor shall, to the degree possible, have made revisions in the sequence of his operations, within the terms of the Contract, to offset the expected delay. The Contractor shall notify the Engineer, in writing, concerning the cause of delay, within 10 calendar days of the beginning of such delay. The validity of any claim by the Contractor to an adjustment in the time of completion shall be determined by the Engineer, and his findings thereon shall be based on his own knowledge and observations of the events involved and documentation submitted by the Contractor, showing all applicable facts relative to the foregoing provisions. Only the physical shortage of material will be considered under these provisions as a cause for adjustment of time and no consideration will be given to any claim that material could not be obtained at a reasonable, practical, or economical cost or price, unless it is shown to the satisfaction of the Engineer that such material could have been obtained only at exorbitant prices entirely out of line with current rates taking into account the quantities involved and the usual practices in obtaining such quantities.

(e) If the Contractor is delayed in completion of the work by reason of changes made under the provisions of Paragraph 5.02 or changed conditions as provided under Paragraph 3.17, herein, or by failure of the Owner to acquire right-of-way as provided under Paragraph 3.04, herein, or by any act of the Engineer or of the Owner, not contemplated by the Contract, an adjustment in the time of completion will be made by the Owner. In the event of such delay, the Contractor shall notify the Engineer in writing of the causes of delay within 15 calendar days from the beginning of any such delay. The Engineer shall ascertain the facts and the extent of the delay.

(f) TIME OF COMPLETION. The Contractor shall complete all or any designated portion of the work called for under the Contract within the number of calendar days set forth in the Contract Documents.

(g) PAYMENT FOR DELAY. The Contract Price(s) paid for the work shall include full compensation for all costs incurred by reason of any delay to the work, except as otherwise provided in this Article. No payment will be made for delay caused by failure on the part of the Contractor to carry out the provisions of the Contract, including failure to provide materials and workmanship meeting the requirements of the Contract Documents, or failure to provide a supervisory representative at the site at all times while work is in progress. In the event of a delay caused by suspension of the work for the sole convenience and benefit of the Owner, or by the failure of the Owner to furnish within Contract time requirements, access to the work, right-of-way, utility relocation, drawings, materials, or equipment for which the Owner is responsible under the Contract; and, provided that the Engineer or Owner has notified the Contractor in accordance with Paragraph 3.11(a), hereof, the Contractor will be entitled to payment of the following costs, to the extent that no other contractor is liable therefor and subject to the succeeding provisions:

(1) Those actual necessary costs of idle time of construction equipment, idle time of workers, moving of construction equipment, and hauling of materials and equipment which are incurred solely by reason of the delay and which could not have been avoided by the judicious handling of forces, construction equipment and plant, with allowance for overhead and profit as provided in Paragraph 5.03 entitled "Extra Work."

(2) Costs incurred, with the written approval of the Engineer, to mitigate the foregoing costs, with allowance for overhead and profit as provided in Paragraph 5.03 entitled "Extra Work."

The Contractor shall maintain complete and accurate daily records of all such costs, clearly distinguishing them from the costs of other portions of the work, and shall submit a detailed written report of such costs to the Engineer. In addition, the Contractor shall submit evidence of any cause of delay specified hereinabove. As soon as practicable, following receipt of such report and evidence, if required, the Engineer will determine the nature and extent of such costs and will, if he finds that payment is due, issue an extra work order therefor, subject to the provisions for Extra Work under Paragraph 5.03. If the Engineer determines that payment is not due, he will so advise the Contractor in writing. Should the Contractor disagree with

such finding, he may submit a notice of protest to the Engineer as provided in Paragraph 3.06, herein. The Contractor shall provide the Engineer with access to his daily cost records or certified copies thereof as requested. All such records shall be retained by the Contractor and opened to inspection and audit by the Owner and his authorized representatives. Except for the additional compensation provided hereinbefore, the Contractor shall have no claim for damage or compensation for any delay or hindrance whether or not contemplated by the Contract.

3.12 EXTENSIONS OF TIME FOR DELAY DUE TO EXCUSABLE INCLEMENT WEATHER

(a) Time of completion will be extended for as many calendar days in excess of the average number of days of excusable inclement weather as defined in (b) hereinbelow, as the Contractor is specifically required under the provisions of the Technical Provisions to suspend construction operations, or as many calendar days as the Contractor is prevented by excusable inclement weather, or conditions resulting immediately therefrom, from proceeding with at least 75 percent of the normal labor and equipment force engaged on any critical path operation. The "critical path operation" shall mean any activity or combination of activities of the work, which, if delayed, will delay the time of completion of the Contract.

(b) Excusable inclement weather shall mean any weather condition sufficient to prevent all construction from proceeding, the duration of which varies in excess of 10 percent from the average conditions expected at the location of the work at the time of the delay, as determined from U.S. Weather Bureau records for the corresponding time of the year for the 3-year period prior to awarding the contract. No extensions of time will be allowed for any inclement weather that could reasonably have been predicted from such weather records at the time of submitting the Contractor's bid.

(c) Should the Contractor prepare to begin work at the regular starting time at the beginning of any regular work shift on any day on which excusable inclement weather, as defined in Paragraph 3.12(a), herein, or the conditions resulting from the weather, or the condition of the work prevents the work from beginning at the usual starting time and the crew is dismissed as a result thereof, Contractor will not be charged for a working day whether or not conditions change thereafter during said day and the major portion of the day could be considered to be suitable for such construction operations.

(d) The Contractor shall base its construction schedule upon the inclusion of the number of days of excusable inclement weather specified in Paragraph entitled "Excusable inclement weather delays" of the Supplemental General Conditions. Excusable inclement weather is defined in Paragraph 3.12 (a) herein. No extension of the Contract Time due to excusable inclement weather will be considered until after the specified number of days of excusable inclement weather has been reached.

3.13 TERMINATION OF CONTRACT BY OWNER (CONTRACTOR NOT AT FAULT)

(a) The Owner may terminate the Contract upon 10 calendar days written notice to the Contractor, if it is found that reasons beyond the control of

either the Owner or Contractor make it impossible or against the Owner's interests to complete the work. In such a case, the Contractor shall have no claims against the Owner except: (1) for the value of work performed up to the date the Contract is terminated; and, (2) for the cost of materials and equipment on hand, in transit, or on definite commitment, as of the date the Contract is terminated, which would be needed in the work and which meet the requirements of the Contract Documents. The value of work performed and the cost of materials and equipment delivered to the site, as mentioned above, shall be determined by the Engineer in accordance with the procedure prescribed for the making of the final estimate and payment under Paragraph 5.09.

(b) When written notice to discontinue work as provided for in Paragraph 3.11, herein, is served upon the Contractor after the work has been damaged by an act of God or other causes as defined in said Paragraph 3.11, the Owner or the Contractor, before work other than investigative work is resumed, may terminate the Contract. Upon such termination the Contractor shall be paid for work performed to the time of occurrence of said act of God or other named causes at the unit prices named in the Contract, or in the event no unit prices are named, a sum equal to that portion of the lump sum price which the work completed to the time of occurrence of the act of God bears to the total work to be performed under the Contract, as determined by the Engineer.

3.14 TERMINATION OF CONTRACT BY OWNER (CONTRACTOR DEFAULT)

(a) In the event of default by the Contractor, the Owner may either suspend the work under the provisions of Paragraph 3.11, herein, or upon 10 calendar days written notice to the Contractor may terminate the Contract as provided herein. It shall be considered a default by the Contractor whenever he shall: (1) declare bankruptcy, become insolvent, or assign his assets for the benefit of his creditors; (2) fail to provide materials or workmanship meeting the requirements of the Specifications; (3) disregard or violate important provisions of the Contract Documents or Engineer's instructions, or fail to prosecute the work according to the approved progress schedule; or, (4) fail to provide a qualified superintendent, competent workmen, or subcontractors, or materials or equipment meeting the requirements of the Contract Documents.

(b) In the event the Contract is terminated in accordance with Paragraph 3.14(a), herein, the Owner may take possession of the work and of all materials, tools, equipment, and property of the Contractor, which have been provided in connection with the work, and may complete the work by whatever method or means he may select. The cost of completing the work shall be deducted from the balance which would have been due the Contractor had the Contract not been terminated and the work completed in accordance with the Contract Documents. If such cost exceeds the balance which would have been due, the Contractor shall pay the excess amount to the Owner. If such cost is less than the balance which would have been due, the Contractor shall not have claim to the difference except to such extent as may be necessary, in the opinion of the Engineer, to reimburse the Contractor or the Contractor's sureties for any expense properly incurred for materials, tools, equipment,

property, and labor devoted to the prosecution of the work, of which the Owner shall have received the benefit. In computing such expenses, as it relates to equipment and property, the salvage value at completion of the work shall be deducted from the depreciated value at the time the Contract was terminated, and the difference shall be considered as an expense.

3.15 TERMINATION OF CONTRACT BY CONTRACTOR

The Contractor may terminate the Contract upon 10 calendar days written notice to the Owner, whenever: (1) the entire work has been suspended under the provisions of Paragraph 3.11, herein, for more than 90 consecutive calendar days through no fault or negligence of the Contractor, and notice to resume work or to terminate the Contract has not been received from the Owner within this time period; or, (2) the Owner should fail to pay the Contractor any substantial sums due him in accordance with the terms of the Contract and within 60 calendar days after presentation to the Owner by the Contractor of a proper claim therefor, unless within said 10-day period the Owner shall have remedied the condition upon which the payment delay was based. In the event of such termination, the Contractor shall have no claims against the Owner except for those claims specifically enumerated in Paragraph 3.13, herein, and as determined in accordance with the requirements of said Paragraph.

3.16 FAILURE TO COMPLY

If the Contractor should refuse or neglect to comply with the provisions of the Contract or the orders of the Engineer, the Owner may have such provisions or orders carried out by others at the expense of the Contractor.

3.17 CHANGED CONDITIONS

(a) The Contractor shall notify the Engineer in writing of the following unforeseen conditions, hereinafter called changed conditions, promptly (but in no event later than 15 days) upon their discovery and before they are disturbed:

(1) Subsurface or latent physical conditions at the site of the work differing materially from those indicated, described, or delineated in the Contract Documents;

(2) Unknown physical conditions at the site of the work of an unusual nature differing materially from those ordinarily encountered and generally recognized as inherent in work of the character provided for in the Contract Documents; and

(3) Delays caused by the Owner which alter the Contractor's schedule of operations by extending the Contractor's operations into a season whereby the number of available days during which work can be performed is reduced as the direct and sole result of inclement weather, as defined in Paragraph 3.12(b), herein, or conditions resulting therefrom; provided, that such delay is sufficient to prevent the Contractor from proceeding with at least 75 percent of the normal labor and equipment

force currently engaged in construction operations for at least 60 percent of the total daily time being currently spent on the controlling operation.

(b) The Engineer will promptly investigate conditions of which he is so notified, or any conditions discovered by him which appear to be changed conditions, and will, as soon as practicable, issue appropriate orders or instructions. If he determines that the conditions are changed conditions, as defined in Paragraph 3.17(a), herein; that they will materially increase or decrease the costs of any portion of the work; and that such change in costs is not or will not be accounted for in any order for changes in design necessitated by the conditions, he will issue a change order adjusting the compensation for such portion of the work in accordance with the provisions for changes and extra work in Paragraphs 5.02 and 5.03, respectively, in the same manner as if the increase or decrease in costs had been due to changes in design. If the Engineer determines that conditions of which he has been notified by the Contractor do not justify an adjustment in compensation, he will so advise the Contractor in writing. Should the Contractor disagree with such determination, he may file a written protest to the Engineer as provided in Paragraph 3.06, herein.

(c) The Contractor may be entitled to a time extension for delay due to changed conditions or unseasonable inclement weather, subject to the provisions of Paragraph 3.12, herein.

(d) Should the Owner temporarily suspend the work by reason of conditions later determined to be changed conditions, such suspension will be considered to be for convenience and benefit of the Owner under Paragraph 3.11, herein. A suspension of the work by reason of conditions claimed by the Contractor to be changed conditions, but later determined not to be changed conditions, will be considered to be for conditions unfavorable for the proper prosecution of the work under said Paragraph 3.11, herein.

(e) The Contractor's failure to give notice of changed conditions promptly upon their discovery and before they are disturbed shall constitute a waiver of all claims in connection therewith, whether direct or consequential in nature.

3.18 LINES AND GRADES

(a) The Engineer will provide one bench mark, near or on the site of the work, and will provide two points near or on the site to establish a base line for use by the Contractor for alignment control. Unless otherwise specified in the Supplemental General Conditions, the Contractor shall furnish all other lines, grades, and bench marks required for proper execution of the work.

(b) The Contractor shall preserve all bench marks, stakes, and other survey marks, and in case of their removal or destruction by his own employees or by his subcontractor's employees, he shall be liable for the cost of their replacement.

3.19 PHYSICAL CONDITIONS

(a) EXPLORATIONS AND REPORTS. Reference is made to the paragraph entitled "Physical Conditions" of the Supplemental General Conditions for identification of those reports of explorations and tests of subsurface conditions at the site that have been utilized by the Engineer in the preparation of the Contract Documents. The Contractor may rely upon the accuracy of the technical data contained in such reports. However, the interpretation of such technical data is the responsibility of the Contractor, together with nontechnical data, interpretations, and opinions contained in such reports or the completeness thereof for the Contractor's purposes.

(b) EXISTING STRUCTURES. Reference is made to the paragraph entitled "Physical Conditions" of the Supplemental General Conditions for identification of those drawings of physical conditions in or relating to existing surface and subsurface structures (except Underground Facilities referred to in paragraph 3.19 (d) herein) which are at or contiguous to the site that have been utilized by the Engineer in preparation of the Contract Documents. Contractor may rely upon the accuracy of the technical data contained in such drawings, but not for the completeness thereof for the Contractor's purposes. Except as indicated in the immediately preceding sentence, the Contractor shall have full responsibility with respect to physical conditions in or relating to such structures.

(c) REPORT OF DIFFERING CONDITIONS. If the Contractor believes that (1) any technical data on which the Contractor is entitled to rely as provided in paragraphs 3.19 (a) and (b) is inaccurate, or (2) any physical condition uncovered or revealed at the site differs materially from that indicated, reflected or referred to in the Contract Documents, the Contractor shall notify the Engineer in accordance with Paragraph 3.17 entitled "Changed Conditions" of the General Conditions for resolution of the inaccuracy or difference.

(d) UNDERGROUND FACILITIES

(1) SHOWN OR INDICATED. The information and data shown or indicated in the Contract Documents with respect to existing Underground Facilities at or contiguous to the site is based on information and data furnished to the Owner or Engineer by the owners of such Underground Facilities or by others. Unless it is expressly provided in the Supplemental General Conditions and/or the Section entitled "Protection and Restoration of Existing Facilities" of the Technical Provisions: the Owner and the Engineer shall not be responsible for the accuracy or completeness of any such information or data; and the Contractor shall have full responsibility for reviewing and checking all such information and data for locating all Underground Facilities shown or indicated in the Contract Documents, for coordination of the Work with the owners of such Underground Facilities during construction, for the safety and protection thereof and repairing any damage thereto resulting from the

Work, the cost of all of which will be considered as having been included in the Contract Price.

(2) NOT SHOWN OR INDICATED. If an Underground Facility is uncovered or revealed at or contiguous to the site which was not shown or indicated in the Contract Documents and which the Contractor could not reasonably have been expected to be aware of, the Contractor shall identify the owner of such Underground Facility and give written notice thereof to that owner and shall notify Engineer in accordance with Section entitled "Protection and Restoration of Existing Facilities" of the Technical Provisions for resolution.

ARTICLE 4 - MATERIALS AND WORKMANSHIP

4.01 MATERIALS AND EQUIPMENT - GENERAL

(a) Unless otherwise specified, shown, or permitted by the Engineer, all materials and equipment incorporated in the work shall be new and of current manufacture. The Engineer may request the Contractor to furnish manufacturer's certificates to this effect.

(b) All packaged manufactured products for use on the work shall be delivered to the work in their original, unopened packages, bearing thereon the manufacturer's name and the brand name of the product.

(c) Wherever any product or material is selected to be used on the work, all such products or materials shall be of the same brand and manufacture throughout the work.

4.02 SAFEGUARDING OF EQUIPMENT, MATERIALS, AND WORK

The Contractor shall properly safeguard all equipment, materials, and work against loss, damage, malicious mischief, or tampering by unauthorized persons until acceptance of the work by the Owner. Locked and covered storage or continuous surveillance by a watchman shall be provided as necessary to accomplish this purpose.

4.03 CONTRACTOR'S UTILITIES

(a) Unless otherwise specified in the Technical Provisions the Owner will furnish, without charge, reasonable quantities of water required by the Contractor in performance of the work under the Contract; however, the Contractor shall provide all facilities necessary to convey the water from the Owner-designated source to the points of use in accordance with the requirements of the Technical Provisions.

(b) The Contractor shall provide his own telephone and all electric power required in performance of the work under the Contract, and shall pay all installation charges and monthly bills in connection therewith.

4.04 TITLE TO MATERIALS FOUND ON THE WORK

The Owner reserves the right to retain title to all soils, stone, sand, gravel, and other materials developed and obtained from excavations and other operations connected with the work. Unless otherwise specified in the Contract Documents, neither the Contractor nor any subcontractor shall have any right, title, or interest in or to any such materials. The Contractor will be permitted to use in the work, without charge, any such materials which meet the requirements of the Contract Documents.

4.05 DEFECTIVE EQUIPMENT, MATERIALS, OR WORK

(a) Inspection of the work shall not relieve the Contractor of any of his obligations under the Contract. Even though equipment, materials, or work required to be provided under the contract have been inspected, accepted, and estimated for payment, the Contractor shall, at his own expense, replace or

repair any such equipment, materials, or work found to be defective or otherwise not to comply with the requirements of the Contract up to the end of the maintenance and guarantee period as provided in Paragraph 6.04.

(b) Any equipment or materials brought upon the job site by the Contractor and subsequently rejected by the Engineer as not complying with the requirements of the Contract shall be removed immediately by the Contractor to a satisfactory distance from the job site.

(c) If the Contractor shall fail to repair or replace unsatisfactory equipment, materials, or work, or to remove unsatisfactory equipment or materials from the job site, within 10 calendar days after being ordered to do so by the Engineer, the Engineer, acting on behalf of the Owner, may make the ordered repairs or remove the condemned equipment or materials and the Owner will deduct the cost thereof from any monies due or to become due the Contractor.

4.06 CHARACTER OF WORKERS

None but skilled workers shall be employed on work requiring special qualifications. When required in writing by the Engineer, the Contractor or any subcontractor shall discharge any person who is, in the opinion of the Engineer, incompetent, disorderly, or otherwise unsatisfactory, and shall not again employ such discharged person on the work except with the consent of the Engineer. Such discharge shall not be the basis of any claim for damages against the Owner or any of his agents.

ARTICLE 5 - PROGRESS AND PAYMENT

5.01 BREAKDOWN OF CONTRACT PRICE OF LUMP SUM CONTRACTS

Prior to execution of a lump sum contract, if requested by the Engineer, the Contractor shall submit a detailed price breakdown for Engineer's review showing the allocated portion of the total bid price to the various items of work designated by the Engineer. Such price allocation shall include quantities, unit prices, and any other information required, in sufficient detail, to enable it to be used by the Engineer in preparing monthly progress payment estimates. The Contractor shall use the allocation of Total Contract Price (Bid Breakdown) form bound with the Specifications if one is included.

5.02 CHANGES

(a) If the Engineer finds it inadvisable to comply strictly with these Contract Documents, the Engineer with the approval of the Owner may prescribe a modification of requirements or of methods of work; and for such purposes the Engineer may at any time during the life of the Contract, by written field order make such changes as he shall find necessary in the design, line, grade, form, location, dimensions, plan, or material of any part of the work or equipment hereinafter specified, or in the quantity or character of the work or equipment to be furnished. If such changes increase or diminish the quantity or amount of work to be done, they shall not constitute the basis for a claim for damages or anticipated profits on the work that may be dispensed with; provided, that if such changes or alterations render useless any work already done or materials already furnished or used in the work, the Engineer shall make reasonable allowance therefor, which action shall be binding upon both parties.

(b) In the event of increasing or decreasing of work, the total amount of work actually done or materials or equipment furnished shall be paid for according to the unit price established for such work under the Contract, wherever such unit price has been established; provided, that an adjustment in compensation will be made for changes which result in an increase or decrease in the quantity of any unit price item of the work in excess of 25 percent. In the event no prices are named in the Contract to cover increases in the work to be done, or a combination of increases and decreases in such work, the cost of such changes shall be covered as hereinafter provided for extra work.

(c) In the event a part of the work is to be entirely eliminated and no lump sum or unit price is named in the Contract to cover such eliminated work, the cost of the eliminated work shall be agreed upon in writing by the Engineer and the Contractor. If after the expiration of a reasonable time, the Engineer and the Contractor fail to agree upon the cost of the eliminated work, the Engineer will unilaterally fix the cost of the eliminated work based upon his estimates of decreased labor and material costs to be incurred by the Contractor. Whether established by agreement of the parties or unilaterally by the Engineer, to the cost of the eliminated work will be added the allowances for overhead and profit, in accordance with the provisions of Paragraph 5.03, herein.

(d) The Contractor shall proceed to immediately revise his schedule to accommodate the changed work upon receipt of a written field order to make the changes, notwithstanding the fact that an agreement has not been reached regarding the cost of the changes. The Contractor shall complete the changed work in accordance with the revised schedule. If, in the opinion of the Engineer, the Contractor is not performing the changed work in accordance with the revised schedule, the Engineer may withhold certification of estimates for payment until such time that the Contractor does perform in accordance with the revised schedule. In the absence of a prior agreement as to the effect on time and cost of the changed work, the Contractor shall submit to the Engineer, within 30 calendar days after receipt of a written field order to perform changes, his claim for an extension of time and for the additional compensation which he considers necessary as a result of performing the changes; such claim shall contain an itemized cost breakdown of claimed additional compensation. If the Contractor fails to submit in writing his claims for increased compensation or extension of time within 30 calendar days after receipt of a written field order to perform changes, the Engineer may make an equitable adjustment of the Contract completion time and compensation based on his judgment of increases or decreases in costs or in time required to complete the Contract due to the changes.

(e) When required to perform and complete the changed work in accordance with the revised schedule, the Contractor shall provide additional labor, materials, equipment, or other factors of production in excess of those in use before the changed work was ordered.

5.03 EXTRA WORK

(a) GENERAL

(1) If during the performance of the Contract it shall, in the opinion of the Engineer, become necessary or desirable for the proper completion of the Contract to order work done or materials or equipment furnished which, in the opinion of the Engineer, are not susceptible of classification under the unit-price items named in the Bidding Schedule, and are not included in any item for which a lump sum is bid, the Engineer, with the approval of the Owner, may order and the Contractor shall do and perform such work and furnish such materials and equipment. Such labor, material, and equipment will be classed as extra work and shall be ordered in writing before such work is started. No extra work will be paid for unless ordered in writing. All claims for extra work shall be submitted to the Owner on standard forms provided by the Owner, and shall be supplemented by such other data as the Engineer may require.

(2) Extra work and work involving a combination of increases and decreases in the work will ordinarily be paid for at a lump sum or unit price agreed upon in writing by the Engineer and the Contractor before the extra work order is issued. In the negotiation of lump sum or unit prices, the agreed estimated cost of the work plus an allowance for overhead and profit, not to exceed the allowances in Paragraph 5.03(a)(3), herein, shall be used. In the event the Contractor fails to submit his proposal within 30 calendar days after receipt of a written

order to perform the extra work, or the Engineer and the Contractor fail to agree upon a price or time adjustment, or both, within a reasonable time, or if in the judgment of the Engineer, it is impracticable because of the nature of the work or for any other reason to fix the price or to adjust the time for completion before the extra work order is issued, equitable payment for extra work and an equitable adjustment in the Contract time for completion of the Contract, if justified, will be made by the Engineer on the basis of his estimate of increases or decreases in the Contractor's cost of the work due to changes, plus an allowance for overhead and profit in accordance with the schedule set forth in Paragraph 5.03(a)(3), herein, or at the option of the Engineer, payment may be made on the basis of cost-plus pursuant to Paragraph 5.03(a)(3), herein.

(3) Extra work and work involving a combination of increases and decreases in the work ordered on the basis of cost-plus will be paid for at the actual necessary cost as determined by the Engineer, plus allowances for overhead and profit. For work involving a combination of increases and decreases in the work the actual necessary cost will be the arithmetic sum of the additive and deductive costs. The allowance for overhead and profit shall include full compensation for superintendence, bond and insurance premiums, taxes, office expense, and all other items of expense or cost not included in the cost of labor, materials, or equipment provided for under Paragraphs 5.03(b),(c), and (d), herein. For projects without federal/state grant participation, the allowance for overhead and profit will be made in accordance with the following schedule:

ACTUAL NECESSARY COST	OVERHEAD AND PROFIT ALLOWANCE
Labor	20 percent
Materials	15 percent
Equipment	15 percent

For projects with federal/state grant participation, the Contractor shall conform to the requirements of Section entitled "Federal Requirements" of the Supplemental General Conditions.

The actual necessary cost for labor, materials, or equipment will be computed in accordance with Paragraphs 5.03(b), (c), and (d), respectively, herein. Superintendence, bond and insurance premiums, taxes, and other general expense is included under overhead and profit allowance in Paragraph 5.03(a)(3), herein, and shall not be included in the computation of actual necessary cost. It is understood that labor, materials, and equipment may be furnished by the Contractor or by the subcontractor on behalf of the Contractor. When all or any part of the extra work is performed by a subcontractor, the allowance specified hereinbefore shall be applied to the labor, materials, and equipment costs of the subcontractor, to which the Contractor may add 5 percent of the Subcontractor's total cost for the extra work. Regardless of the number of hierachical tiers of subcontractors, the 5 percent increase

above the subcontractor's total cost which includes the allowances for overhead and profit specified hereinbefore may be applied 1 time only for each separate extra work transaction. The Contractor shall furnish the Engineer daily report sheets covering the direct costs of labor and materials and charges for equipment, whether furnished by the Contractor, subcontractor, or other forces, and the report sheets shall be signed by the Contractor or his authorized agent. The daily report sheets shall provide names or identifications and classifications or workmen, and hours worked; size, type, and identification number of equipment, and hours operated. Material charges shall be substantiated by valid copies of vendor's invoices. The Engineer will make any necessary adjustments and compile the costs of cost-plus work. When these reports are agreed upon and signed by both parties, they shall become the basis of payment for the work performed, but shall not preclude subsequent adjustment based on a later audit.

(b) LABOR. The cost of labor used in performing the work by the Contractor, a subcontractor, or other forces will be the sum of the following:

(1) The actual wages paid plus any employer payments to, or on behalf of workers for fringe benefits including health and welfare, pension, vacation, and similar purposes. The cost of labor may include the wages paid to foremen when determined by the Engineer that the services of foremen do not constitute a part of the overhead allowance.

(2) All payment imposed by State and Federal laws including, but not limited to, compensation insurance, and social security payments.

(3) The amount paid for subsistence and travel required by collective bargaining agreements, or in accordance with the regular practice of the employer.

At the beginning of the Contract and as later requested by the Engineer, the Contractor shall furnish the Engineer proof of labor compensation rates being paid.

(c) MATERIALS. The cost of materials used in performing the work will be the cost to the purchaser, whether Contractor, subcontractor or other forces, from the supplier thereof, except as the following are applicable:

(1) Cash or trade discounts available to the purchaser shall be credited to the Owner notwithstanding the fact that such discounts may not have been taken by the Contractor.

(2) In materials secured by other than a direct purchase and direct billing to the purchaser, the cost shall be deemed to be the price paid to the actual supplier as determined by the Engineer. Markup except for actual costs incurred in the handling of such materials will not be allowed.

(3) Payment for materials from sources owned wholly or in part by the purchaser shall not exceed the price paid by the purchaser for similar

materials from said sources on Contract items or the current wholesale price for such materials delivered to the jobsite, whichever price is lower.

(4) If in the opinion of the Engineer the cost of materials is excessive, or the Contractor does not furnish satisfactory evidence of the cost of such materials, then the cost shall be deemed to be the lowest current wholesale price for the quantity concerned delivered to the jobsite less cash or trade discount. The Owner reserves the right to furnish materials for the work and no claim shall be made by the Contractor for costs and profit on such materials.

(d) EQUIPMENT. The Contractor will be paid for the use of equipment at the rental rate listed for such equipment specified in the current edition of the "Rental Rate Blue Book" as published by Dataquest Incorporated, 1290 Ridder Park Drive, San Jose, California 95131, phone (408) 971-9100. Such rental rate will be used to compute payments for equipment whether the equipment is under the Contractor's control through direct ownership, leasing, renting, or another method of acquisition. The rental rate to be applied for use of each item of equipment shall be the rate resulting in the least total cost to the Owner for the total period of use. If it is deemed necessary by the Contractor to use equipment not listed in the foregoing publication, an equitable rental rate for the equipment will be established by the Engineer. The Contractor may furnish cost data which might assist the Engineer in the establishment of the rental rate.

(1) The rental rates paid, as above provided, shall include the cost of fuel, oil, lubrication supplies, small tools, necessary attachments, repairs and maintenance of all kinds, depreciation, storage, insurance, and all incidentals. Operators of equipment will be separately paid for as provided in Paragraph 5.03(b), herein.

(2) All equipment shall, in the opinion of the Engineer, be in good working condition and suitable for the purpose for which the equipment is to be used.

(3) Before construction equipment is used on the work, the Contractor shall plainly stencil or stamp an identifying number thereon at a conspicuous location, and shall furnish to the Engineer, in duplicate, a description of the equipment and its identifying number.

(4) Unless otherwise specified, manufacturer's ratings and manufacturer approved modifications shall be used to classify equipment for the determination of applicable rental rates. Equipment which has no direct power unit shall be powered by a unit of at least the minimum rating recommended by the manufacturer.

(5) Individual pieces of equipment or tools having a replacement value of $100 or less, whether or not consumed by use, shall be considered to be small tools and no payment will be made therefor.

(6) Rental time will not be allowed while equipment is inoperative due to breakdowns.

(e) EQUIPMENT ON THE WORK. The rental time to be paid for equipment on the work shall be the time the equipment is in productive operation on the extra work being performed and, in addition, shall include the time required to move the equipment to the location of the extra work and return it to the original location or to another location requiring no more time than that required to return it to its original location, except that moving time will not be paid if the equipment is used on other than the extra work, even though located at the site of the extra work. Loading and transporting costs will be allowed, in lieu of moving time, when the equipment is moved by means other than its own power, except that no payment will be made for loading and transporting costs when the equipment is used at the site of the extra work on other than the extra work. The following shall be used in computing the rental time of equipment on the work.

(1) When hourly rates are listed, any part of an hour less than 30 minutes of operation shall be considered to be 1/2-hour of operation, and any part of an hour in excess of 30 minutes will be considered one hour of operation.

(2) When daily rates are listed, any part of a day less than 4 hours of operation shall be considered to be 1/2-day of operation. When owner-operated equipment is used to perform extra work to be paid for on a cost-plus basis, the Contractor will be paid for the equipment and operator, as follows:

- Payment for the equipment will be made in accordance with the provisions in Paragraph 5.03(d), herein.

- Payment for the cost of labor and subsistence or travel allowance will be made at the rates paid by the Contractor to other workers operating similar equipment already on the project, or in the absence of such labor established by collective bargaining agreements for the type of workmen and location of the work, whether or not the operator is actually covered by such an agreement. A labor surcharge will be added to the cost of labor described herein in accordance with the provisions of Paragraph 5.03(b), herein, which surcharge shall constitute full compensation for payments imposed by State and Federal laws and all other payments made to or on behalf of workers other than actual wages.

- To the direct cost of equipment rental and labor, computed as provided herein, will be added the allowances for equipment rental and labor as provided in Paragraph 5.03(a)(3), herein.

(f) SPECIAL SERVICES. Special extra work or services are defined as that extra work characterized by extraordinary complexity, sophistication or innovation, or a combination of the foregoing attributes which are unique to the construction industry. The following may be considered by the Engineer in making estimates for payment for special services:

(1) When the Engineer and the Contractor, by agreement, determine that a special service or extra work is required which cannot be performed by the forces of the Contractor or those of any of his subcontractors, the special service or extra work may be performed by an entity especially skilled in the work to be performed. After validation of invoices and determination of market values by the Engineer, invoices for special services or extra work based upon the current fair market value thereof may be accepted without complete itemization of labor, material, and equipment rental costs.

(2) When the itemization of labor, material and equipment rental costs is impractical, or not in accordance with established billing practices of the special service industry involved, the Engineer may accept other evidence of the cost of special services in lieu of itemized invoices.

(3) When the Contractor is required to perform extra work necessitating special fabrication or machining process in a fabrication or a machine shop facility away from the jobsite, the charges for that portion of the extra work performed at the off-site facility may, by agreement, be accepted as a special service and accordingly, the invoices for the work may be accepted without detailed itemization.

(4) All invoices for special services will be adjusted by deducting all cash or trade discounts offered or available, whether the discounts were taken or not. In lieu of the allowances for overhead and profit specified in Paragraph 5.03(a)(3), herein, an allowance of 5 percent will be added to invoices for special services.

(g) When extra work ordered by the Engineer is performed by forces other than the Contractor's organization, the Contractor shall reach agreement with such other forces as to the distribution of the payment made by the Owner for such work.

(h) All extra work performed hereunder shall be subject to all of the provisions of the Contract and the Contractor's sureties shall be bound with reference thereto as under the original Contract. Copies of all amendments to surety bonds or supplemental surety bonds shall be submitted to the Engineer for review prior to the performance of any extra work hereunder.

5.04 RIGHT TO AUDIT

If the Contractor submits a claim to the Engineer for additional compensation, the Engineer shall have the right, as a condition to considering the claim, and as a basis for evaluation of the claim, and until the claim has been settled, to audit the Contractor's books to the extent they are relevant, as determined by the Engineer. This right shall include the right to examine books, records, documents, and other evidence and accounting procedures and practices, sufficient to discover and verify all direct and indirect costs of whatever nature claimed to have been incurred or anticipated to be incurred and for which the claim has been submitted. The right to audit shall include the right to inspect the Contractor's plants, or such parts thereof, as may be or have been engaged in the performance of this

Contract. The Contractor further agrees that the right to audit encompasses all subcontracts and is binding upon subcontractors. The rights to examine and inspect herein provided for shall be exercisable through such representatives as the Engineer deems desirable during the Contractor's normal business hours at the office of the Contractor. The Contractor shall make available to the Engineer for auditing, all relevant accounting records and documents, and other financial data, and upon request, shall submit true copies of requested records to the Engineer.

5.05 OVERTIME WORK

(a) Except as otherwise provided in this Paragraph, the Contractor shall receive no additional compensation for overtime work, i.e., work in excess of 8 hours in any one calendar day or 40 hours in any one calendar week, even though such overtime work may be required under emergency conditions and may be ordered by the Engineer in writing. Additional compensation will be paid the Contractor for overtime work only in the event extra work is ordered by the Engineer and the change order specifically authorizes the use of overtime work and then only to such extent as overtime wages are regularly being paid by the Contractor for overtime work of a similar nature in the same locality.

(b) All costs of inspection and testing performed during overtime work by the Contractor which is allowed solely for the convenience of the Contractor shall be borne by the Contractor. The Owner shall have the authority to deduct the cost of all such inspection and testing from any partial payments otherwise due to the Contractor.

5.06 LIQUIDATED DAMAGES

(a) The Contractor shall pay to the Owner the amount specified in the Supplemental General Conditions, not as a penalty but as liquidated damages, if he fails to complete the work or specified parts of the work within the time or times agreed upon. The periods for which said damages shall be paid shall be the number of calendar days from the agreed date or dates of completion as contained in the Contract, or from the date of termination of any extension of time approved by the Owner, to the date or dates the Engineer certifies completion of work or specified parts of the work to the Owner as provided in Paragraph 5.09, herein. The Owner may deduct the amount of said damages from any monies due or to become due the Contractor.

(b) The said amount is fixed and agreed upon by and between the Contractor and the Owner because of the impracticability and extreme difficulty of fixing and ascertaining the actual damages the Owner would sustain; and said amount is agreed to be the amount of damages which the Owner would sustain.

(c) All times specified in the Contract Documents are hereby declared to be of the essence.

5.07 PROGRESS SCHEDULES

Within 30 calendar days after award of the Contract, or at such times as may be required by the Engineer, the Contractor shall submit construction

schedules showing the order in which he proposes to carry on the work and the dates when the various parts are to be begun and completed. Schedules shall be subject to the approval of the Engineer and if, in his opinion, a submitted schedule is inadequate to secure the completion of the work in the time agreed upon, or is otherwise not in accordance with the requirements of the Contract Documents, he may require the Contractor to submit a new schedule which will assure timely completion of the work. Schedules shall conform to the requirements of the Technical Provisions.

5.08 MONTHLY ESTIMATES AND PAYMENTS

(a) Unless otherwise prescribed by law, prior to the last day of each month, the Contractor shall prepare and submit to the Engineer, an estimate of the cumulative amount and value of work performed by the Contractor up to that date. Except as may otherwise be provided in the Supplemental General Conditions, said amount will include 80 percent of the value of all acceptable materials and equipment for the Contract that have been delivered and suitably stored at the project site but not yet used in the work, provided any such individual item has a value of more than $5000 and will become a permanent part of the improvement. Said value will be based on certified copies of invoices delivered by the Contractor to the Engineer. To this figure will be added all amounts due or paid the Contractor for performance of extra work in accordance with change orders.

(b) Upon verification and approval by the Engineer, such estimates shall be prepared in the form directed by the Engineer and delivered to the Engineer not later that the last day of each calendar month for approval and submittal to the Owner for payment.

(c) Unless otherwise prescribed by law, the Owner may retain a portion of the amount otherwise due to the Contractor, as follows:

(1) Retention of 10 percent of each approved progress payment until the work of the Contract is 50 percent complete; then, subject to the written approval of the Contractor's Surety, the Owner may, at his option, refund that portion of retainage held by the Owner that is in excess of 5 percent of the total of all work done to date and thereafter continue to retain 5 percent of the value of all approved progress payment requests subsequently submitted.

(2) The Owner may reinstate up to 10 percent retention of the total of all work done if the Owner determines, at its discretion, that the Contractor is not performing the Contract satisfactorily, or there is other specific cause for such withholding.

Additional deductions will be made from each monthly payment request for amounts due the Owner for equipment or materials furnished or services rendered. Further deductions may be made as provided in Paragraph 5.09. From the balance thus determined will be deducted the amount of all previous payments, and the remainder shall constitute the monthly payment due the Contractor. Within 30 calendar days after receipt of the Engineer's recommendation of the monthly payment due the Contractor and subject to the deductions provided under Paragraphs 5.08(c) and 5.08(g), herein, the Owner will pay the amount found due.

(d) On lump-sum contracts the Engineer's estimate of the monthly payment due the Contractor will not be required to be made by strict measurement, and an approximate estimate will suffice. The monthly payments may be withheld or reduced if, in the Engineer's opinion, the Contractor is not diligently or efficiently endeavoring to comply with the intent of the Contract, or if the Contractor fails to pay his labor and material bills as they become due. On unit-price contracts, all field measurements shall be carefully made and the monthly pay estimate shall be computed on the basis of said unit prices and all quantities shall be subject to review by the Engineer prior to approval for payment.

(e) The Contractor shall furnish the Engineer promptly, upon request, all information and records necessary to determine the cost of the work for purposes of estimating monthly payments, including an itemized statement, in a form satisfactory to the Engineer, of the actual cost of all acceptable materials delivered by the Contractor to the site.

(f) No monthly payment shall be construed as an acceptance of the work or of any portion of the work, nor shall the making of such payment preclude the Owner from demanding and recovering from the Contractor such damages as it may sustain by reason of the Contractor's failure to comply with the requirements of the Contract.

(g) In the event the Contract is terminated, any funds due the Contractor and retained by the Owner in accordance with Paragraph 5.08(a), herein, shall become the property of the Owner to the extent necessary to repay to the Owner any excess in the contract price above the cost of the work completed at the time of termination. After issuance of notice to discontinue work, no further payments will be made to the Contractor for the work covered by the notice until completion of the work and final settlement has been made.

5.09 FINAL ESTIMATE AND PAYMENT

(a) After the Contractor has certified to the Engineer that he believes he has completed all of the work on the Contract the Engineer will perform a pre-final inspection. When the Engineer is of the opinion that the Contractor has completely performed all work required under the Contract, he will report physical completion of the work to the Owner and will recommend acceptance of the work.

(b) After acceptance of the work by the Owner's governing body, the Owner will make final payment to the Contractor of the amount remaining <u>after</u> deducting all prior payments and all amounts to be kept or retained under the provisions of the Contract, including the following items:

(1) Liquidated damages, as applicable.

(2) Two times the value of outstanding items of pickup work or punch list items indicated on the Notice of Completion as being yet uncompleted or uncorrected, as applicable. All such work shall be completed or corrected to the satisfaction of the Owner within the time stated on the Notice of Completion, otherwise the Contractor does hereby

waive any and all claims to all monies withheld by the Owner under the Contract to cover the value of all such uncompleted or uncorrected items.

5.10 FINAL PAYMENT TERMINATES LIABILITY OF OWNER

Final payment is defined as the last progress payment made to the Contractor for earned funds, less retainage as applicable, less deductions listed in Paragraph 5.09(b)(1) and (2), herein. The acceptance by the Contractor of the final payment referred to in Paragraph 5.09, herein, shall be a release of the Owner and its agents from all claims of liability to the Contractor for anything done or furnished for, or relating to, the work or for any act or neglect of the Owner or of any person relating to or affecting the work, except demands against the Owner for the remainder, if any, of the amounts kept or retained under the provisions of Paragraph 5.09, herein; and excepting pending, unresolved claims filed prior to the date of Notice of Completion under Paragraph 3.06(c).

5.11 RELEASE OF RETAINAGE AND OTHER DEDUCTIONS

(a) After filing the Notice of Completion, and not more than 45 calendar days thereafter (based on a 30-day lien filing period and 15-day processing time), the Owner will release to the Contractor the retainage funds withheld pursuant to Paragraph 5.08(c), herein, less any deductions to cover pending Stop Notice Claims; except, that upon submittal of a Stop Notice Release Bond issued by an approved Surety Company executed in favor of the General Contractor or other prime contractors, the Owner will release such portion of the retainage funds to said General Contractor or other prime contractors that is being held solely to cover Stop Notice Claims pursuant to applicable State Law.

(b) After filing of Notice of Completion, the Contractor shall have 45 calendar days to complete any outstanding items of pickup work remaining to be completed or corrected as listed on a final punch list made a part of the Notice of Completion. Upon expiration of said 45 days, the amounts withheld pursuant to the provisions of Paragraph 5.09(b)(2), herein, for all remaining work items will be returned to the Contractor; provided, that said work has been completed or corrected to the satisfaction of the Owner within said 45 days. Otherwise, the Contractor does hereby waive any and all claims for all monies withheld by the Owner under the Contract to cover two times the value of such remaining uncompleted or uncorrected items.

ARTICLE 6 - BONDS, INSURANCE, LEGAL RESPONSIBILITY, AND PUBLIC SAFETY

6.01 PERFORMANCE BOND

The Contractor shall secure with a corporate surety or sureties satisfactory to the Owner, a bond in the amount at least equal to the Contract Price as security to guarantee faithful performance of the Contract.

6.02 PAYMENT BOND

The Contractor shall secure with a corporate surety or sureties satisfactory to the Owner, a bond in the amount at least equal to the Contract Price as security to guarantee payment of claims of laborers and materialmen under the Contract.

6.03 ADDITIONAL SURETY

If, during the life of the performance bond, any of the sureties named in said bond become insufficient in the opinion of the Owner, he may require the Contractor to furnish additional sufficient sureties within 10 calendar days of receipt of written order to do so. In the event the Contractor fails or neglects to furnish sufficient additional sureties, when ordered, within the prescribed time period, the Owner may suspend the work or terminate the Contract, and the Contractor shall have no claim for damages.

6.04 MAINTENANCE AND GUARANTEE

(a) The Contractor shall guarantee the entire work constructed by him under the Contract to be free of defects in materials and workmanship for a period of one year following the date of completion of the work as defined in Paragraph 1.10, herein. The Contractor shall agree to make, at his own expense, any repairs or replacements made necessary by defects in materials and workmanship which become evident within said guarantee period. The Contractor hereby agrees to indemnify and hold harmless the Owner, the Engineer, and their officers, agents and employees, against and from all claims and liability arising from damage and injury due to said defects. The Contractor shall make all repairs and replacements promptly upon receipt of written order from the Engineer. If the Contractor fails to make the repairs and replacements promptly, the Owner may do the work and the Contractor and his surety shall be liable to the Owner for the cost of such work.

(b) The performance of guarantee and conditions specified in Paragraph 6.04(a), herein, shall be secured by a surety bond which shall be delivered by the Contractor to the Owner prior to the date on which final payment is made to the Contractor. Said bond shall be in an approved form and executed by a surety company or companies satisfactory to the Owner, in the amount of 10 percent of the Contract price, or $1,000, whichever is greater. Said bond shall remain in force for the duration of the guarantee period specified in Paragraph 6.04(a), herein. Instead of providing such a bond as described above, the Contractor may, at his option, provide for the performance bond furnished under the Contract to remain in force for said amount until the expiration of said guarantee period; provided, that the amount of said performance bond may be reduced to 10 percent of the Contract price, or $1000, whichever is greater, beginning at the date of the Notice of Completion.

(c) Specific guarantees for periods longer than one year may be specified in the Technical Provisions for certain items or portions of the work.

6.05 INSURANCE

(a) GENERAL. After receipt of Notice of Award and pprior to execution of the Agreement by the Owner, the Contractor shall obtain all the insurance required under this Paragraph and submit said insurance policies to the Engineer for review. In addition, the Contractor shall provide the Engineer with corresponding certificates of insurance. The Contractor shall not allow any subcontractor to commence work on it's subcontract until the insurance required of the subcontractor has been so obtained and reviewed. Unless otherwise specified, all insurance required under this Paragraph shall be maintained continuously during the life of the Contract up to the date of acceptance of the work by the Owner's governing body, but Contractor's liabilities under this Contract shall not be deemed limited in any way to the insurance coverage required.

(b) WORKERS' COMPENSATION INSURANCE. The Contractor shall procure and maintain Workers' Compensation Insurance as required by applicable State or territorial law for all of his employees to be engaged in work at the site of the project under this Contract and, in case of any such work sublet, the Contractor shall require the subcontractor similarly to provide Workers' Compensation Insurance for all of the latter's employees to be engaged in such work unless such employees are covered by the protection afforded by the Contractor's Workers' Compensation Insurance. In case any class of employees engaged in hazardous work on the project under this Contract is not protected under the Workers' Compensation Statute, the Contractor shall provide and shall cause each subcontractor to provide adequate employer's liability insurance for the protection of such of his employees as are not otherwise protected.

(c) CONTRACTOR'S PUBLIC LIABILITY AND PROPERTY DAMAGE INSURANCE AND VEHICLE LIABILITY INSURANCE. The Contractor shall procure and maintain Contractor's Public Liability Insurance, Contractor's Property Damage Insurance and Vehicle Liability Insurance in the amounts specified in the Supplemental General Conditions.

(d) SUBCONTRACTOR'S PUBLIC LIABILITY AND PROPERTY DAMAGE INSURANCE AND VEHICLE LIABILITY INSURANCE. The Contractor shall either: (1) require each of his subcontractors to procure and to maintain Subcontractor's Public Liability and Property Damage Insurance and Vehicle Liability Insurance of the type and in the amounts specified in the Supplemental General Conditions; or, (2) insure the activities of his subcontractors in his own policy, in like amount.

(e) BUILDER'S RISK INSURANCE (ALL RISK COVERAGE). The Contractor shall procure and maintain Builder's Risk Insurance (All Risk coverage) on a 100 percent completed value basis for the benefit of the Owner, the Contractor and subcontractors as their interests may appear. The Builder's Risk policy shall insure against all risks of direct physical loss or damage to property from any external cause including flood and earthquake. Allowable

exclusions, if any, shall be as specified in the Supplemental General Conditions.

(f) SCOPE OF INSURANCE. The insurance required under Paragraph 6.05(c) and (d), herein, shall provide adequate protection for the Contractor and his subcontractors, respectively, against damage claims which may arise from operations under this Contract, whether such operations be by the insured or by anyone directly or indirectly employed by him. In addition, the insurance required under Paragraphs 6.05(c), (d), and (e), herein, shall name the Owner, the Engineer, and their officers, agents, and employees as "additional insureds" under the policies.

(g) PROOF OF INSURANCE. The Contractor shall furnish the Engineer with certificates showing the type, amount, class of operations covered, effective dates and dates of expiration of policies. Such certificates shall also contain substantially the following statement: "The insurance covered by this certificate will not be cancelled or materially altered, except after 30 days written notice has been received by the Owner."

6.06 INDEMNIFICATION OF OWNER AND ENGINEER

(a) To the fullest extent permitted by law, the Contractor shall indemnify and hold harmless the Owner, the Engineer, and their officers, agents, and employees, against and from all claims and liability arising under or by reason of the Contract or any performance of the work, but not from the sole negligence or willful misconduct of the Owner and/or the Engineer. Such indemnification by the Contractor shall include but not be limited to the following:

(1) Liability or claims resulting directly or indirectly from the negligence or carelessness of the Contractor or his agents in the performance of the work, or in guarding or maintaining the same, or from any improper materials, implements, or appliances used in its construction, or by or on account of any act or omission of the Contractor or his agents;

(2) Liability or claims arising directly or indirectly from or based on the violation of any law, ordinance, regulation, order, or decree, whether by the Contractor or his agents;

(3) Liability or claims arising directly or indirectly from the use or manufacture by the Contractor, his agents, or the Owner in the performance of this Contract of any copyrighted or uncopyrighted composition, secret process, patented or unpatented invention, article, or appliance, unless otherwise specifically stipulated in this Contract;

(4) Liability or claims arising directly or indirectly from the breach of any warranties, whether express or implied, made to the Owner or any other parties by the Contractor or his agents;

(5) Liabilities or claims arising directly or indirectly from the willful misconduct of the Contractor or his agents; and,

(6) Liabilities or claims arising directly or indirectly from any breach of the obligations assumed herein by the Contractor.

(b) The Contractor shall reimburse the Owner, and the Engineer for all costs and expenses, including attorney's fees, incurred by said Owner, and the Engineer in enforcing the provisions of this Paragraph.

6.07 LAWS AND REGULATIONS

The Contractor shall observe and comply with all Federal, State, and local laws, ordinances, codes, orders, and regulations which in any manner affect those engaged or employed on the work, the materials used in the work, or the conduct of the work. If any discrepancy or inconsistency should be discovered in this Contract in relation to any such law, ordinance, code, order, or regulation, the Contractor shall report the same in writing to the Engineer. The Contractor shall indemnify and hold harmless the Owner, the Engineer, and their officers, agents, and employees, against all claims or liability arising from violation of any such law, ordinance, code, order, or regulation, whether by himself or by his employees or subcontractors. Any particular law or regulation specified or referred to elsewhere in these Contract Documents shall not in any way limit the obligation of the Contractor to comply with all other provisions of Federal, State, and local laws and regulations.

6.08 PERMITS AND LICENSES

(a) Within 10 calendar days of the commencement date stated in the Notice to Proceed, the Contractor shall submit a complete list of all permits he will obtain indicating the Agency required to grant the permit and the expected date of submission for the permit and required date for receipt of the permit.

(b) Unless otherwise provided in the Supplemental General Conditions, the Contractor shall obtain at his own expense all permits and licenses required for prosecution of the work, and shall pay all taxes properly assessed against his equipment or property used in connection with the work.

(c) Similarly, the Contractor shall bear all costs of inspection required by agency or utility from which the permit was obtained, as well as all costs, relating to traffic control or safeguarding of persons or property required by said agency or utility.

6.09 SALES AND USE TAXES

The Contractor shall pay all sales and use taxes assessed by Federal, State or local authorities on materials furnished by the Contractor in performance of the work.

6.10 LABOR DISCRIMINATION

No discrimination shall be made in the employment of persons upon the work by the Contractor or by any subcontractor under him, because of the race, color,

sex, or religion of such persons, and there shall be full compliance with the provisions of applicable State and Federal laws in this regard.

6.11 PUBLIC SAFETY AND CONVENIENCE

(a) The Contractor shall at all times conduct his work so as to assure the least possible obstruction to traffic and inconvenience to the general public, and adequate protection of persons and property in the vicinity of the work.

6.12 SANITARY PROVISIONS

The Contractor shall provide and maintain such sanitary accommodations for the use of it's employees and those of it's subcontractors as may be necessary to comply with the requirements of State and local health departments.

6.13 FEDERAL SAFETY AND HEALTH REGULATIONS

(a) Contractors and subcontractors shall comply with the provisions of the "Safety and Health Regulations for Construction," as promulgated by the Secretary of Labor under Section 107 of the "Contract Work Hours and Safety Standards Act", as set forth in Title 29 CFR Part 1926.

(b) Contractors and subcontractors shall comply with the provisions of the Occupational Safety and Health Standards, promulgated by the Secretary of Labor under the "Occupational Safety and Health Act of 1970", as set forth in 29 CFR 1926. Where an individual State act on occupational safety and health standards has been approved by Federal authority, then the provisions of said State act shall control.

6.14 CONTRACTOR'S RESPONSIBILITY FOR LOSSES AND DAMAGE

(a) RISK OF LOSS. Except as otherwise provided in the Contract Documents and except as to the cost of repair or restoration of damage to the work caused by an act of God or other causes as specified for adjustment of time in Paragraph 3.11(c), the Contractor shall bear all losses resulting to him on account of the amount or character of the work, or from any unforeseen obstructions or difficulties which may be encountered, or from an encumbrance on the line of the work, or because the nature of the ground in or on which the work is done is different from what is assumed or on account of the weather, floods, or other causes.

(b) MATERIALS AND FACILITIES. The Contractor shall be responsible for materials and facilities as hereinafter provided and in the event of his failure to carry out said responsibilities, the same may be carried out by the Owner at the expense of the Contractor.

(1) The Contractor shall be responsible for any material furnished him and for the care of all work until its completion and final acceptance, and he shall at his own expense replace damaged or lost material and repair damaged parts of the work.

(2) The Contractor shall protect Owner facilities from damage resulting from his work. Owner facilities damaged by or as a result of the Contractor's work under this Contract shall be repaired or replaced, as directed by the Engineer, at the Contractor's expense.

6.15 BENEFICIAL USE OR PARTIAL UTILIZATION

(a) The Owner shall have the right to utilize or place into service any item of equipment or other usable portion of the work prior to completion of the entire project. Whenever the Owner plans to exercise said right, the Contractor will be notified in writing by the Owner, identifying the specific portion or portions of the work to be so utilized or otherwise placed into service, hereinafter referred to as beneficial use.

(b) It shall be understood by the Contractor that until such written notification is issued, all responsibility for care and maintenance of all items or portions of the work to be placed into beneficial use shall be borne by the Contractor. Upon issuance of said written notice of beneficial use, the Owner will accept responsibility for the protection and maintenance of all such items or portions of the work described in the written notice, and it is further understood that the manufacturer's warranties of any affected equipment will commence not later than the date of said notice.

(c) The Contractor shall retain full responsibility for satisfactory operation of the total project, however, and the Contractor's guarantee period shall commence only after the date of completion for the entire project as defined in Paragraph 1.10 herein. Such guarantee of total systems operation shall include that portion or portions previously placed into beneficial use by the Owner.

- END OF GENERAL CONDITIONS -

SUPPLEMENTAL GENERAL CONDITIONS

ARTICLE 7 - GENERAL

7.01 GENERAL

(a) These Supplemental General Conditions amend or supplement the General Conditions of the Contract herein, and any other provisions of the Contract Documents as indicated herein. All provisions which are not so amended or supplemented remain in full force and effect.

(b) The terms used in these Supplemental General Conditions which are defined in the General Conditions of the Contract have the meanings assigned to them in the General Conditions of the Contract herein.

7.02 SUPPLEMENTAL DEFINITIONS

In addition to the provisions of Paragraph 1.01 and 1.02 respectively, the following supplemental definitions shall apply.

(a) OWNER

The "Owner" is the City of Glendale, Arizona, with municipal offices located at 5850 West Glendale Avenue, Glendale Arizona, 85301.

(b) ENGINEER

The Engineer is the firm of James M. Montgomery, Consulting Engineers, Inc., located at 9830 North 32nd Street, Suite B-110, Phoenix, Arizona, 85028.

7.03 SUBCONTRACT LIMITATIONS

In addition to the provisions of Paragraph 3.10 of the General Conditions, the Contractor shall perform not less than 20 percent of the work with his own forces (i.e., without subcontracting). The 20 percent requirement shall be understood to refer to the work, the value of which totals not less than 20 percent of the Contract Price.

7.04 BINDING ARBITRATION

In addition to the provisions of Paragraph 3.07 of the General Conditions, the following shall apply if the Owner and the Contractor mutually agree to arbitrate.

(a) All claims, disputes, and other matters in question between the Contractor and Owner arising out of, or relating to, the Contract Documents or breach thereof, except as provided in Paragraph 3.06 of the General Conditions, and except for claims which have been waived by the making or acceptance of final payment as provided in Paragraph 5.10 of the General Conditions shall be decided by arbitration in accordance with the Construction Industry Arbitration Rules of the American Arbitration Association; provided that arbitration awards must be presented in writing and include the following elements:

(1) Legal "findings of fact" established by the arbiter.

(2) Specific breakdown of the dollar amounts allocated for each issue under arbitration.

(3) The arbiter's "conclusions of law".

(4) A summary of the evidence.

(5) Reasons underlying the arbiter's award.

(b) No arbitration arising out of or relating to the Contract Documents shall include, by consolidation, joinder or in any other manner, the Engineer, his employees or consultants except by written consent containing a specific reference to the Owner-Contractor Agreement and signed by the Engineer, the Owner, the Contractor and any other person sought to be joined. No arbitration shall include by consolidation, joinder or in any other manner, parties other than the Owner, the Contractor and any other persons substantially involved in a common question of fact or law, whose presence is required if complete relief is to be accorded in the arbitration. No person other than the Owner or Contractor shall be included as an original third party or additional third party to an arbitration whose interest or responsibility is insubstantial. Any consent to arbitration involving an additional person or persons shall not constitute consent to arbitration of any dispute not described therein or with any person not named or described therein. The foregoing agreement to arbitrate and any other agreement to arbitrate with an additional person or persons duly consented to by the parties to the Owner-Contractor Agreement shall be specifically enforceable under the prevailing arbitration law. The award rendered by the arbitrators shall be final, and judgment may be entered upon it in accordance with applicable law in any court having jurisdiction thereof.

(c) Notice of the demand for arbitration shall be filed in writing with the other party to the Owner-Contractor Agreement and with the American Arbitration Association, and a copy shall be filed with the Engineer. The demand for arbitration shall be made within the time limits specified in Paragraph 7.04(d), herein, and in all other cases within a reasonable time after the claim, dispute or other matter in question has arisen, and in no event shall it be made after the date when institution of legal or equitable proceedings based on such claim, dispute or other matter in question would be barred by the applicable statute of limitations.

(d) No demand for arbitration of any such claim, dispute or other matter may be made until the earlier of: (1) the date on which the Engineer has rendered a written decision; or, (2) the tenth day after the parties have presented their evidence to the Engineer or have been given a reasonable opportunity to do so if the Engineer has not rendered his written decision by that date. When such a written decision of the Engineer states: (1) that the decision is final but subject to appeal; and, (2) that any demand for arbitration of a claim, dispute or other matter covered by such decision must be made within

30 days after the date on which the party making the demand receives the written decision; failure to demand arbitration within said 30 days' period will result in the Engineer's decision becoming final and binding upon the Owner and the Contractor. If the Engineer renders a decision after arbitration proceedings have been initiated, such decision may be entered as evidence but will not supersede any arbitration proceedings unless the decision is acceptable to all parties concerned.

(e) Unless otherwise agreed in writing, the Contractor shall carry on the work and maintain its progress during any arbitration proceedings, and the Owner shall continue to make payments to the Contractor in accordance with the Contract Documents.

7.05 PHYSICAL CONDITIONS

In the preparation of the Drawings and Specifications, the Engineer has relied upon:

(a) The following reports of explorations and tests of subsurface conditions at the site of the work:

(1) Report dated January 13, 1984 prepared by Sergent, Hauskins & Beckwith, entitled "Geotechnical Investigation Report - Sewage Lift Stations, 55th Avenue and Arizonal Canal; 67th Avenue and Arizona Canal; Glendale Arizona", consisting of 22 pages.

(2) Report dated August 30, 1982 prepared by Thomas-Hartig & Associates, Inc. entitled "Arizona Canal Diversion Channel Bridge" consisting of 36 pages.

(b) The following drawings of physical conditions in or relating to existing surface and subsurface structures (except Underground Facilities) which are at or contiguous to the site of the work:

(1) Drawings dated June 4, 1984 prepared by Flood Control District of Maricopa County entitled "67th Avenue Bridge at Arizona Canal Diversion Channel", consisting of 29 sheets, numbered 1 to 29 inclusive.

(2) Drawings dated September 21, 1984 prepared by PRC Toups entitled "City of Glendale Lift Station and Sewer Relocation at 67th Avenue and the Arizona Canal Diversion Channel - S823040E", consisting of 12 sheets, numbered 1 to 12 inclusive.

Copies of these reports and drawings may be examined at the office of James M. Montgomery, Consulting Engineers, Inc. during regular business hours. As provided in Paragraph 3.19 of the General Conditions and as identified and established above, the Contractor may rely upon the accuracy of the technical data contained in these reports and drawings which are incorporated in the Contract Documents by reference. However, the interpretation of such

technical data is the responsibility of the Contractor, together with nontechnical data, interpretations, and opinions contained in such reports or drawings, which are not a part of the Contract Documents, or the completeness thereof for the Contractor's purposes.

7.06 EXCUSABLE INCLEMENT WEATHER DELAYS

The Contractor's construction schedule shall be based upon the inclusion of at least 2 days of excusable inclement weather delays.

ARTICLE 8 - AMOUNTS OF LIQUIDATED DAMAGES AND INSURANCE

8.01 AMOUNT OF LIQUIDATED DAMAGES

The Contractor shall, as provided in Paragraph 5.06 of the General Conditions, and in accordance with Section 108.9 of the Uniform Standard Specifications for Public Construction, Maricopa Association of Governments, pay to the Owner as fixed, agreed, and liquidated damages for each calendar day's delay in completion of the work beyond the time agreed upon, the amount of $100 per day.

8.02 INSURANCE

(a) The Contractor shall, as provided in Paragraph 6.05 of the General Conditions, maintain the required insurance in the amounts shown on the "Certificate of Insurance" form in the Contract Documents section of this specification.

(b) The Contractor shall exclude earthquake coverage from the Builder's Risk Insurance requirements under Paragraph 6.05 (e) of the General Conditions.

ARTICLE 9 - CITY OF GLENDALE REQUIREMENTS

9.01 GENERAL

By Ordinance No. 1110 New Series, the City of Glendale adopted the "Uniform Standard Specifications for Public Works Construction", which are sponsored and distributed by the Maricopa Association of Governments. Copies of these documents, with revisions, are on file in the office of the Clerk of the City of Glendale, and are hereby made a part of these Contract Documents as "Referenced Standard Specifications".

Whenever in the Uniform Standard Specifications, the words "The Contracting Agency" are used, the meaning shall be the City of Glendale.

In all cases where ASTM, AASHTO, AWWA, USAG, Federal, City of Phoenix, MAG Specifications, Maricopa County, Arizona State Highway, or other standard specifications are referred to, unless otherwise stated, revisions, supplements or addenda issued on or before the date of this contract, shall prevail.

Conflicts within these Contract Documents shall be resolved according to the order of precedence of the Contract Documents found in Paragraph 2.04.

9.02 PERMITS

The City has obtained certain required permits which are included in the project specifications, but it will be the duty of the Contractor to determine that all the necessary permits have been obtained. The Contractor shall, at his own expense, obtain all required permits which have not been furnished by the City. A no-fee permit will be issued for work in the City of Glendale right-of-way and easement. (Also see Paragraph 9.05, Dust Prevention.)

9.03 SUBCONTRACTS

Subcontracts shall be in accordance with, and the Contractor shall be bound by, the following provisions:

(a) All subcontracts shall be subject to the approval of the City.

(b) All subcontracts shall be in writing and shall provide that all work to be performed thereunder shall be performed in accordance with the terms of the Contract.

(c) Certified copies of any and all subcontracts shall be furnished to the City Engineering Department; however, prices may be omitted.

(d) Subcontracts shall conform to the regulations governing employment of labor.

(e) The subcontracting of any part of the work will in no way relieve the Contractor of his responsibility under the Contract.

9.04 STAKING AND CONSTRUCTION MONITORING

Staking shall be provided by the Contractor. The Public Works/Engineering Department of the City of Glendale will not provide any staking services for this project.

Construction monitoring services will be provided by James M. Montgomery, Consulting Engineers, Inc. (JMM). Construction monitoring services by JMM shall not be considered as direct control of the individual workman and his work. The direct control shall be solely the responsibility of the Contractor.

9.05 DUST PREVENTION

The Contractor shall take whatever steps, procedures, or means required to prevent abnormal dust conditions due to his construction operations in connection with this Contract. The dust control measures shall be maintained at all times during construction of the project, to the satisfaction of the Engineer, in accordance with the requirements of the "Maricopa County Health Department Air Pollution Control Regulations" which have been adopted pursuant to the authority granted by Section 36-779, Arizona Revised Statutes.

The Contractor shall be required to obtain the necessary permit from the Maricopa County Air Pollution Control Bureau, 1845 East Roosevelt Street, (602)258-6381, extension 372.

9.06 EXCESS MATERIAL

Excess material shall be removed from the work site and wasted at a location approved by the Engineer. Broken concrete and asphalt may be delivered to the Glendale Sanitary Landfill located at 115th Avenue and Glendale Avenue. The prevailing regulations and fee schedule shall not be waived for work under this project. All materials, to be disposed of at the landfill, shall be weighed and disposed of at the prevailing rate.

9.07 ELECTRIC POWER AND WATER

The Contractor shall make his own arrangements for electric power and water. Subject to the convenience of the City, he may be permitted to connect to existing facilties where available, but he shall meter and bear the cost of such power or water. Fire hydrant meters may be obtained from the City of Glendale. Installation and removal of meters should be scheduled at least twenty-four (24) hours in advance through the Public Works/Field Operations Department at 931-5561. A $325.00 deposit is required for each meter. The cost of the water is at the prevailing rate.

9.08 MAINTENANCE OF IRRIGATION FACILITIES

Where irrigation facilitiles interfere with construction, the Contractor shall remove and replace the affected irrigation facilities to its original conditions. Final acceptance of replaced facilities will depend upon final approval of the Engineer.

9.09 CLEAN-UP

After all work under this Contract is completed, the Contractor shall remove all loose concrete, lumber, wire, reinforcing, debris, and other materials not incorporated in the work, from the site of the work. Clean-up shall include the removal of all excess pointing mortar materials within pipes and removal of oversize rocks and boulders left after finish grading. The Contractor shall provide for the disposal of all waste products, debris, etc., and shall make necessary arrangements for such disosal.

9.10 PAYMENTS TO CONTRACTOR

The measurements of quantities and the payments to the Contractor shall be in accordance with MAG Uniform Standard Specifications for Public Works Construction, Part 100 - General Conditions, Section 109 - Measurements and Payments, as modified by Article 5 of the General Conditions.

Payments will be made on the basis of itemized monthly statements provided by the Contractor and shall be submitted with an updated progress schedule in accordance with the standard specifications and the General Conditions. Three (3) copies of the itemized statement should be submitted to the City Engineering Department. After verification, payments will be processed within thirty (30) days.

The City will make a partial payment to the Contractor on the basis of an estimate prepared by the contractor, and approved by the City Engineer, for work completed through the last day of the preceding calendar month.

The City will retain ten percent (10%) of each such estimate until acceptance of the project and final payment.

Upon 100% completion and acceptance of the project, and with the request for final payment, the Contractor shall complete and submit the lien waiver form which is included in these specifications.

9.11 EXISTING UTILITIES

The Contractor is hereby advised that the location of all utilitlies, as shown on the plans, may not be complete nor exact and the Contractor shall satisfy himself as to the exact location of the utilities by contacting the utility companies before proceeding with the work. The Contractor shall be responsible for any damage done to public or private property.

Utility companies and other interested parties have been provided with construction plans and the construction schedule for this project. The Contractor shall comply with MAG Specifications 105.6 to cooperate with the utility companies.

9.12 ENERGIZED AERIAL ELECTRICAL POWER LINES

The utility company maintains energized aerial electrical power lines in the immediate vicinity of this project. Do not consider these lines to be insulated. Construction personnel working in proximity to these lines are exposed to an extreme hazard from electrical shock. Contractors, their employees, and all other construction personnel working on this project must be warned of the danger and instructed to take adequate protective measures, including maintaining a minimum ten (10) feet clearance between the lines and all construction equipment and personnel. (See OSHA Std. 1926.550(a)15). As an additional safety precaution, Contractors should also be instructed to call the utility company to arrange, if possible, to have these lines de-energized or relocated when the work reaches their immediate vicinity. The cost of such temporary arrangements would be borne by the Contractor. The utility company can often respond to such requests if two days advance notice is given, but some situations may require up to sixty (60) days lead time for relocation or other arrangements.

9.13 SURVEY CONTROL POINTS AND MONUMENTS

Existing survey monuments indicated on the plans or found during construction shall be protected by the Contractor, and in the event removal is necessary, removal and replacement shall be performed by permission of the Engineer, under direct supervision of the Engineer or his authorized representative. Survey monuments shall be constructed to conform to the requirements of MAG Specifications, Section 405, and Standard Details.

9.14 SOUTHWEST GAS FACILTIES EXPOSED DURING CONSTRUCTION

The Contractor, upon exposing a gas line during construction , shall call Southwest Gas at 271-GASS. The Southwest Gas patrolman will respond, usually within an hour, to inspect the line. Minor cuts or abrasions to the pipe coating will be rewrapped and tracer wire will be reconnected at no cost to the City or the Contractor.

TECHNICAL PROVISIONS

DIVISION 100 - GENERAL

SECTION 101 - GENERAL REQUIREMENTS

101.01 THE REQUIREMENT

The Contractor shall furnish, in accordance with the Specifications and Drawings, all plant, labor, equipment, and materials required for construction of the Modifications to Glendale Well No. 8. Except as otherwise required in these specifications, construction of the project shall be in accordance with all applicable Maricopa Association of Governments' (MAG) Uniform Standard Specifications, latest revision.

101.02 DESCRIPTION OF WORK

The work involves modifications to the existing City of Glendale Well No. 8. This includes cleaning, video taping, and test pumping the existing well, furnishing and installing a submersible pump and motor, a pitless unit, and all electrical, wiring, cabinets, and controls. The work also requires construction of a water transmission line, to include approximately 260 feet of 8-inch diameter ductile iron pipe, with valves and fittings, and approximately 270 feet of 8-inch diameter asbestos cement pipe and fittings. The project also includes the installation of a telemetry pump control system, furnished by the City of Glendale. The electrical and telemetry controls will be installed in an existing sewage lift station control room, located near the well site.

101.03 SITE OF THE WORK

The site of the work is located in Section 12, Township 3 North, Range 1 East, approximately 150 feet west of the centerline of 67th Avenue and 1,300 feet south of the centerline of Greenway Road, between Greenway and Thunderbird Roads, within the city limits of Glendale, Arizona.

101.04 BEGINNING AND COMPLETION OF THE WORK

The Contractor shall begin work on or before the commencement date stated in the Notice to Proceed from the Owner, and shall complete all work under the Contract within 120 calendar days after said commencement date. The time stated for completion shall include final cleanup of the premises.

101.05 CONTRACT DRAWINGS

Contract drawings applicable to the work to be performed under the Contract are listed in the Table of Contents.

101.06 ORDER OF THE WORK

The work shall be carried on at such places on the project and also in such order or precedence as may be found necessary by the Engineer to expedite the completion of the project. After work has begun on any portion of designated

part of the project, it shall be carried forward to its final completion. All work shall conform to the provisions of the approved Contractor's schedule as specified under Paragraph "Contractor's Schedules" of Section entitled "Contractor Submittals" of the Technical Provisions.

101.07 INTERFERENCE WITH ADJACENT WORK

The Contractor shall cooperate fully with all utility forces of the Owner or forces of other public or private agencies engaged in the relocation, altering, or otherwise rearranging of any facilities which interfere with the progress of the work, and shall schedule the work so as to minimize interference with said relocation, altering, or other rearranging of facilities.

101.8 SALVAGE

The Owner may desire to salvage certain items of existing equipment which are to be dismantled and removed during the course of construction. Prior to removal of any existing equipment from the site of the work, the Contractor shall ascertain from the Engineer whether or not the particular item or items are to salvaged. Items to be salvaged shall be stockpiled on the site in a location as directed by the Engineer. All other items of equipment shall be disposed of off-site by the Contractor at his own expense.

101.09 ABBREVIATIONS

Wherever the following abbreviations are used they shall have the meanings indicated:

AASHTO..... American Association of the State Highway and Transportation Officials
ACI..... American Concrete Institute
AGA..... American Gas Association
AGMA..... American Gear Manufacturers' Association
AI..... The Asphalt Institute
AIA..... American Institute of Architects
AISC..... American Institute of Steel Construction
AISI..... American Iron & Steel Institute
AITC..... American Institute of Timber Construction
ANSI..... American National Standards Institute
APA..... American Plywood Association
API..... American Petroleum Institute
ASCE..... American Society of Civil Engineers
ASHRAE..... American Society of Heating, Refrigerating, and Air Conditioning Engineers
ASME..... American Society of Mechanical Engineers
ASQC..... American Society for Quality Control
ASTM..... American Society for Testing and Materials
AWPA..... American Wood Preservers Association
AWPI..... American Wood Preservers Institute
AWS..... American Welding Society
AWWA..... American Water Works Association
BBC..... Basic Building Code, Building Officials and Code

Administrators International
CBM..... Certified Ballast Manufacturers
CFR..... Code of Federal Regulations
CLFMI..... Chain Link Fence Manufacturers Institute
CRSI..... Concrete Reinforcement and Steel Institute
ETL..... Electrical Test Laboratories
IEEE..... Institute of Electrical and Electronics Engineers
IPCEA..... Insulated Power Cable Engineers Association
ISA..... Instrument Society of America
ISO..... Insurance Services Office
NACE..... National Association of Corrosion Engineers
NEC..... National Electrical Code
NEMA..... National Electrical Manufacturers Association
NFPA..... National Fire Protection Association
NFPA..... National Forest Products Association
OSHA..... Occupational Safety and Health Act of 1970
PCA..... Portland Cement Association
SAE..... Society of Automotive Engineers
SSBC..... Southern Standard Building Code, Southern Building Code Congress
SSPWC..... Standard Specifications for Public Works Construction
SSPC..... Steel Structures Painting Council
UBC..... Uniform Building Code, International Conference of Building Officials
U/L..... Underwriters' Laboratories, Inc.
WCLIB..... West Coast Lumber Inspection Bureau
WCRSI..... Western Concrete Reinforcing Steel Institute
WRI..... Wire Reinforcement Institute
WWPA..... Western Wood Products Association

- END OF SECTION -

SECTION 110 - MOBILIZATION

110.01 DEFINITION AND SCOPE

Mobilization shall include the obtaining of all permits, insurance, and bonds; moving onto the site of all plant and equipment; furnishing and erecting plants, temporary buildings, and other construction facilities; all as required for the proper performance and completion of the work. Mobilization shall include but not be limited to the following principal items:

(a) Moving on to the site of all Contractor's plant and equipment required for first month operations.

(b) Installing temporary construction power and wiring.

(c) Establishing fire protection system.

(d) Developing construction water supply.

(e) Providing on-site sanitary facilities and potable water facilities as specified.

(f) Arranging for and erection of Contractor's work and storage yard.

(g) Submittal of all required subcontractor insurance certificates and bonds.

(h) Obtaining all required permits.

(i) Posting all OSHA required notices and establishment of safety programs.

(j) Have the Contractor's superintendent at the job site full time.

110.02 PAYMENT FOR MOBILIZATION

The Contractor's attention is directed to the condition that no payment for mobilization, or any part thereof will be approved for payment under the Contract until all mobilization items listed above have been completed as specified.

- END OF SECTION -

SECTION 130 - CONTRACTOR SUBMITTALS

130.01 GENERAL

Wherever submittals are required hereunder, all such contractor submittals shall be submitted to the Engineer.

130.02 SHOP DRAWINGS

(a) Wherever called for in these Specifications or on the Drawings, or where required by the Engineer, the Contractor shall furnish to the Engineer for review, 8 copies of each submittal. The term "submittal" as used herein shall be understood to include detail design calculations, shop drawings, fabrication and installation drawings, erection drawings, lists, graphs, operating instructions, catalog sheets, data sheets, samples, and similar items. Unless otherwise required, said submittals shall be submitted to the Engineer at a time sufficiently early to allow review of same by the Engineer, and to accommodate the rate of construction progress required under the Contract.

(b) All shop drawings or other submittals shall be accompanied by the Engineer's standard submittal transmittal form. This form may be obtained in quantity from the Engineer at reproduction cost. Any submittal not accompanied by such a form, or where all applicable items on the form are not completed, will be returned for resubmittal. Upon submittal of a letter to the Engineer, designating a subcontractor or supplier as an agent of the Contractor within the limits and terms specified by the Contractor, the Contractor may authorize a material or equipment supplier to deal directly with the Engineer with regard to submittals; however, ultimate responsibility for the accuracy and completeness of the information contained in the submittal shall remain with the Contractor.

(c) Normally, a separate transmittal form shall be used for each specific item or class of material or equipment for which a submittal is required. Transmittal of a submittal of various items using a single transmittal form will be permitted only when the items taken together constitute a manufacturer's "package" or are so functionally related that expediency indicates review of the group or package as a whole. A multiple-page submittal shall be collated into sets, and each set shall be stapled or bound, as appropriate, prior to transmittal to the Engineer.

(d) Except as may otherwise be provided herein, the Engineer will return prints of each submittal to the Contractor through the Resident Project Representative, with his comments noted thereon, within 30 calendar days following their receipt by the Engineer. It is considered reasonable that the Contractor shall make a complete and acceptable submittal to the Engineer by the second submission of a submittal item. The Owner reserves the right to withold monies due the Contractor to cover additional costs of the Engineer's review beyond the second submission.

(e) If 3 copies of a submittal are returned to the Contractor marked "NO EXCEPTIONS TAKEN," formal revision and resubmission of said submittal will not be required.

(f) If 3 copies of a submittal are returned to the Contractor marked "MAKE CORRECTIONS NOTED," formal revision and resubmission of said submittal will not be required.

(g) If 1 copy of the submittal is returned to the Contractor marked "AMEND-RESUBMIT," the Contractor shall revise said submittal and shall resubmit 8 copies of said revised submittal to the Engineer.

(h) If 1 copy of the submittal is returned to the Contractor marked "REJECTED-RESUBMIT," the Contractor shall revise said submittal and shall resubmit 8 copies of said revised submittal to the Engineer.

(i) Fabrication of an item shall not be commenced before the Engineer has reviewed the pertinent submittals and returned copies to the Contractor marked either "NO EXCEPTIONS TAKEN" or "MAKE CORRECTIONS NOTED." Revisions indicated on submittals shall be considered as changes necessary to meet the requirements of the Contract Drawings and Specifications and shall not be taken as the basis of claims for extra work.

(j) All Contractor submittals shall be carefully reviewed by an authorized representative of the Contractor, prior to transmittal to the Engineer. Each submittal shall be dated, signed, and certified by the Contractor, as being correct and in strict conformance with the Contract Documents. No consideration for review by the Engineer of any Contractor submittals will be made for any items which have not been so certified by the Contractor. All noncertified submittals will be returned to the Contractor without action taken by the Engineer, and any delays caused thereby shall be the total responsibility of the Contractor.

(k) The Engineer's, review of Contractor submittals shall not relieve the Contractor of the entire responsibility for the correctness of details and dimensions. The Contractor shall assume all responsibility and risk for any misfits due to any errors in Contractor-submitted submittals. Any fabrication or other work performed in advance of the receipt of approved submittals shall be entirely at the Contractor's risk and expense. The Contractor shall be responsible for the dimensions and the design of adequate connections and details.

130.03 CONTRACTOR'S SCHEDULES

(a) The Contractor shall meet with the Engineer for a pre-construction conference prior to commencing work. At this time, the Contractor shall submit a progress schedule showing the order in which he proposes to carry out the work, the dates on which he will start the several phases of the work, and the contemplated date for completion of each phase.

(b) After the work is in progress, the Contractor shall submit supplementary progress schedules of the progress to date and projected to completion with each pay request submitted in accordance with Paragraph 20, "PAYMENTS TO CONTRACTOR", of the General Conditions. Schedule changes requiring an increase in the City's Engineering personnel on the project shall not be put into effect until the Engineer has made arrangements for additional personnel.

130.04 SUBMITTAL OF PROPOSED EQUIVALENT PRODUCTS

(a) All materials, processes, or equipment which are to be offered by the Contractor as equivalent to those indicated or specified in the Contract Documents shall be submitted to the Engineer within 60 calendar days after date of execution of the agreement.

(b) Wherever in the Specifications brand name products are specified in addition to the provisions for an "or equal" product, the Contractor is not required to submit catalog cuts or other product data for those products which are specified by brand name and catalog number, however, wherever an "equal" product is proposed, it shall be accompanied with copies of all product data and certification, as required, in addition to any submittals of samples required under Paragraph "Samples" herein; provided, that shop drawings shall be submitted for all products, whether specified by brand name or submitted as an "or equal," in accordance with the requirements of this Section.

130.05 SAMPLES

(a) Unless otherwise specified, whenever in the Specifications samples are required, the Contractor shall submit not less than 3 samples of each such item or material to the Engineer for approval at no additional cost to the Owner.

(b) Samples, as required herein, shall be submitted for approval a minimum of 15 working days prior to ordering such material for delivery to the job-site, and shall be submitted in an orderly sequence so that dependent materials or equipment can be assembled and reviewed without causing delays in the work.

(c) All samples shall be individually and indelibly labeled or tagged, indicating thereon all specified physical characteristics and manufacturer's names for identification and submittal to the Engineer for approval. Upon receiving approval of the Engineer, one set of the samples will be stamped and dated by the Engineer and returned to the Contractor and two sets will be retained by the Engineer.

(d) Unless otherwise specified, all colors and textures of specified items will be selected by the Engineer from the manufacturer's standard colors and standard product lines.

130.06 TECHNICAL MANUALS

(a) The Contractor shall furnish to the Engineer 5 identical sets of technical manuals. Each set shall consist of one or more volumes, each of which shall be bound in a standard size, 3-ring, looseleaf, vinyl plastic hard cover binder suitable for bookshelf storage. Binder ring size shall not exceed 2.5 inches. A table of contents shall be provided which indicates all equipment in the technical manuals.

(b) Using the outline provided in the Equipment Maintenance Summary Sheet (copy of which may be obtained from the Engineer), the Contractor shall include for each item of mechanical, electrical, and instrumentation equipment of the technical manuals the following:.

(1) Complete operating instructions, including location of controls, special tools or other equipment required, related instrumentation, and other equipment needed for operation.

(2) Lubrication schedules, including the lubricant SAE grade and type, temperature range of lubricants, and including frequency of required lubrication.

(3) Preventive maintenance procedures and schedules.

(4) Parts lists, by generic title and identification number, complete, with exploded views of each assembly.

(5) Disassembly and reassembly instructions.

(6) Name and location of nearest supplier and spare parts warehouse.

(7) Recommended troubleshooting and start-up procedures.

(8) Reproducible prints of the record drawings, including diagrams and schematics, as required under the electrical and instrumentation portions of these specifications.

(9) Tabulation of proper settings for all pressure relief valves, (low/high) pressure switches and other related equipment protection devices.

(10) Detailed test procedures to determine performance efficiency of equipment.

(11) List of all electrical relay settings including alarm and contact settings.

(c) All technical manuals shall be submitted in final form to the Engineer not later than the 75 percent of construction completion date. All discrepancies found by the Engineer in the technical manuals shall be corrected by the Contractor within 30 calendar days from the date of written notification by the Engineer.

(d) Incomplete or unapproved technical manuals at the 75 percent construction point shall constitute sufficient justification to withhold payment for work completed beyond that period in accordance with Paragraph "Technical Manual Submittals" of Section entitled "Project Closeout."

130.07 SPARE PARTS LISTS

The Contractor shall furnish to the Engineer 2 identical sets of spare parts information for all mechanical, electrical, and instrumentation equipment. The spare parts list shall include the current list price of each spare part. The spare parts list shall be limited to those spare parts which each manufacturer recommends be maintained by the Owner in inventory at the plant site. Each manufacturer or supplier shall indicate the name, address, and telephone number of its nearest outlet of spare parts to facilitate the Owner in ordering. The Contractor shall cross-reference all spare parts lists to the equipment numbers designated in the specifications or on the drawings. The spare parts lists shall be bound in standard size, 3-ring, looseleaf, vinyl plastic hard cover binders suitable for bookshelf storage. Binder ring size shall not exceed 2.5 inches.

130.08 RECORD DRAWINGS

(a) The Contractor shall keep and maintain, at the job site, one record set of drawings. On these, he shall mark all project conditions, locations, configurations, and any other changes or deviations which may vary from the details represented on the original contract drawings, including buried or concealed construction and utility features which are revealed during the course of construction. Special attention shall be given to recording the horizontal and vertical location of all buried utilities that differ from the locations indicated, or which were not indicated on the contract drawings. Said record drawings shall be supplemented by any detailed sketches as necessary or directed to indicate, fully, the work as actually constructed. These master record drawings of the Contractor's representation of as-built conditions, including all revisions made necessary by addenda, change orders, and the like shall be maintained up-to-date during the progress of the work.

(b) In the case of those drawings which depict the detail requirement for equipment to be assembled and wired in the factory, such as motor control centers and the like, the record drawings shall be updated by indicating those portions which are superseded by final shop drawings, and by including appropriate reference information describing the shop drawings by manufacturer, drawing and revision numbers.

(c) Record drawings shall be accessible to the Engineer at all times during the construction period and shall be delivered to the Engineer upon completion of the work.

(d) Requests for partial payments will not be approved if the record drawings are not kept current, and not until the completed record drawings, showing all variations between the work as actually constructed and as originally shown on the Contract Drawings or other Contract Documents, have been inspected by the Engineer.

(e) Final payment will not be approved until the Contractor-prepared record drawings have been delivered to the Engineer. Said up-to-date, record drawings may be in the form of a set of prints with carefully plotted information overlayed in pencil.

(f) Upon substantial completion of the work and prior to final acceptance, the Contractor shall complete and deliver a complete set of drawings to the Engineer for transmittal to the Owner, conforming to the construction records of the Contractor. This set of drawings shall consist of corrected plans showing the reported location of the work. The information submitted by the Contractor and incorporated by the Engineer into the Record Drawings will be assumed to be reliable, and the Engineer will not be responsible for the accuracy of such information, nor for any errors or omissions which may appear on the Record Drawings as a result.

- END OF SECTION -

SECTION 140 - QUALITY CONTROL

140.01 SITE INVESTIGATION AND CONTROL

(a) The Contractor shall verify all dimensions in the field and shall check field conditions continuously during construction. The Contractor shall be solely responsible for any inaccuracies built into the work due to his failure to comply with this requirement.

(b) The Contractor shall inspect related and appurtenant work and shall report in writing to the Engineer any conditions which will prevent proper completion of the work. Failure to report any such conditions shall constitute acceptance of all site conditions, and any required removal, repair, or replacement caused by unsuitable conditions shall be performed by the Contractor at his sole cost and expense.

140.02 INSPECTION OF THE WORK

(a) The work shall be conducted under the general observation of the Engineer and shall be subject to inspection by representatives of the Engineer acting on behalf of the Owner to insure strict compliance with the requirements of the Contract Documents. Such inspection may include mill, plant, shop or field inspection, as required. The Engineer shall be permitted access to all parts of the work, including plants where materials or equipment are manufactured or fabricated.

(b) The presence of the Engineer or any inspector(s), however, shall not relieve the Contractor of the responsibility for the proper execution of the work in accordance with all requirements of the Contract Documents. Compliance is a duty of the Contractor, and said duty shall not be avoided by any act or ommission on the part of the Engineer or any inspector(s).

(c) All materials and articles furnished by the Contractor shall be subject to rigid inspection, and no materials or articles shall be used in the work until they have been inspected and accepted by the Engineer or his authorized representative. No work shall be backfilled, buried, cast in concrete, hidden or otherwise covered until it has been inspected by the Engineer or his authorized representative. Any work so covered in the absence of inspection shall be subject to uncovering. Where uninspected work cannot be uncovered, such as in concrete cast over reinforcing steel, all such work shall be subject to demolition, removal, and reconstruction under proper inspection, and no addition payment will be allowed therefor.

140.03 TIME OF INSPECTION AND TESTS

Samples and test specimens required under these Specifications shall be furnished and prepared for testing in ample time for the completion of the necessary tests and analyses before said articles or materials are to be used. The Contractor shall furnish and prepare all required test specimens at his own expense. Except as otherwise provided in these Specifications, performance of the required tests will be by the Owner, and all costs therefor will be borne by the Owner at no cost to the Contractor; except, that the costs of any test which shows unsatisfactory results shall be borne by the Contractor. Whenever the Contractor is ready to backfill, bury, cast

in concrete, hide, or otherwise cover any work under the Contract, he shall notify the Engineer not less than 24 hours in advance to request inspection before beginning any such work of covering. Failure of the Contractor to notify the Engineer at least 24 hours in advance of any such inspections shall be reasonable cause for the Engineer to order a sufficient delay in the Contractor's schedule to allow time for such inspections and any remedial or corrective work required, and all costs of such delays, including its effect upon other portions of the work, shall be borne by the Contractor.

140.04 SAMPLING AND TESTING

(a) When not otherwise specified, all sampling and testing shall be in accordance with the methods prescribed in the current standards of the ASTM, as applicable to the class and nature of the article or materials considered; however, the Owner reserves the right to use any generally-accepted system of inspection which, in the opinion of the Engineer will insure the Owner that the quality of the workmanship is in full accord with the Specifications.

(b) Any waiver of any specific testing or other quality assurance measures, whether or not such waiver is accompanied by a guarantee of substantial performance as a relief from the specified testing or other quality assurance requirements as originally specified, and whether or not such guarantee is accompanied by a performance bond to assure execution of any necessary corrective or remedial work, shall not be construed as a waiver of any technical or qualitative requirements of the Specifications.

(c) Notwithstanding the existence of such waiver, the Engineer shall reserve the right to make independent investigations and tests as specified in the following Subparagraph and, upon failure of any portion of the work to meet any of the qualitative requirements of the Specifications, shall be reasonable cause for the Engineer to require the removal or correction and reconstruction of any such work.

(d) In addition to any other inspection or quality assurance provisions that may be specified, the Engineer shall have the right to independently select, test, and analyze, at the expense of the Owner, additional test specimens of any or all of the materials to be used. Results of such tests and analyses shall be considered along with the tests or analyses made by the Contractor to determine compliance with the applicable specifications for the materials so tested or analyzed; provided, that wherever any portion of the work is discovered, as a result of such independent testing or investigation by the Engineer, which fails to meet the requirements of the Specifications, all costs of such independent inspection and investigation, and all costs of removal, correction, and reconstruction or repair of any such work shall be borne by the Contractor.

140.05 RIGHT OF REJECTION

(a) The Engineer, acting for the Owner shall have the right, at all times and places, to reject any articles or materials to be furnished hereunder which, in any respect, fail to meet the requirements of these Specifications, regardless of whether the defects in such articles or materials are detected

at the point of manufacture or after completion of the work at the site. If the Engineer or inspector, through an oversight or otherwise, has accepted materials or work which is defective or which is contrary to the Specifications, such material, no matter in what stage or condition of manufacture, delivery, or erection, may be rejected by the Engineer for the Owner.

(b) The Contractor shall promptly remove rejected articles or materials from the site of the work after notification of rejection.

(c) All costs of removal and replacement of rejected articles or materials as specified herein shall be borne by the Contractor.

- END OF SECTION -

SECTION 150 - TEMPORARY CONSTRUCTION FACILITIES

150.01 CONTRACTOR'S PLANT AND EQUIPMENT

(a) GENERAL. It shall be the Contractor's responsibility to provide plant and equipment that is adequate for the performance of the work under this Contract within the time specified. All plant and equipment shall be kept in satisfactory operating condition, shall be capable of safely and efficiently performing the required work, and shall be subject to inspection and approval by the Owner's representative at any time within the duration of the Contract. All work hereunder shall conform to the applicable requirements of the OSHA Standards for Construction.

(b) SEPARATE CONTRACTS. Whenever portions of the work hereunder are let under separate contracts, all of the provisions of this Section shall apply to each such prime contractor, including the requirements for separate field offices and communications facilities.

(c) CONSTRUCTION LIGHTING. All work conducted at night or under conditions of deficient daylight shall be suitably lighted to insure proper work and to afford adequate facilities for inspection and safe working conditions.

(d) CONSTRUCTION WIRING. All wiring for temporary electric light and power shall be properly installed and maintained and shall be securely fastened in place. All electrical facilities shall conform to the requirements of Subpart K of the OSHA Safety and Health Standards for Construction.

(e) SEPARATION OF CIRCUITS. Unless otherwise permitted by the Engineer, circuits separate from lighting circuits shall be used for all power purposes.

(f) FIRE PROTECTION. The construction plant and all other parts of the work shall be connected with the Contractor's water supply system and shall be adequately protected against damage by fire. Hose connections and hose, water casks, chemical equipment, or other sufficient means shall be provided for fighting fires in the temporary structures and other portions of the work, and responsible persons shall be designated and instructed in the operation of such fire apparatus so as to prevent or minimize the hazard of fire. The Contractor's fire protection program shall conform to the requirements of Subpart F of the OSHA Standards for Construction.

150.02 UTILITIES

(a) WATER SUPPLY

(1) The Contractor shall provide, at his own expense, an adequate supply of water of a quality suitable for all his domestic and construction purposes. The Contractor shall provide and operate all pumping facilities, pipelines, valves, hydrants, storage tanks, and all other equipment necessary for the adequate development and operation of his water supply system. Water used for domestic purposes shall be free of contamination and shall conform to the requirements of the state and local authorities for potable water. The Contractor shall be solely responsible for the adequate functioning of his water supply system and

shall be solely liable for any claims arising from the use of same, including discharge or waste of water therefrom.

(b) WATER CONNECTIONS. The Contractor shall not make connection to, or draw water from, any fire hydrant or pipeline without first obtaining permission of the authority having jurisdiction over the use of said fire hydrant or pipeline and from the agency owning the affected water system. For each such connection made, the Contractor shall first attach to the fire hydrant or pipeline a valve and a meter, if required by said authority, of a size and type acceptable to said authority and agency.

(c) REMOVAL OF WATER CONNECTIONS. Before final acceptance of the work on the project, all temporary connections and piping installed by the Contractor shall be entirely removed, and all affected improvements shall be restored to their original condition, or better, to the satisfaction of the Engineer and to the agency owning the affected utility.

(d) POWER. The Contractor shall provide, at his own expense, all necessary power required for his operations under the Contract, and shall provide and maintain all temporary power lines required to perform the work in a safe and satisfactory manner.

(e) APPROVAL OF ELECTRICAL CONNECTIONS. All temporary connections for electricity shall be subject to approval of the Engineer and the power company representative, and shall be removed in like manner at the Contractor's expense prior to final acceptance of the work.

150.03 SAFETY

(a) GENERAL. Appropriate first aid facilities and supplies shall be kept and maintained by the Contractor at the site of the work. All persons within the construction area shall be required to wear protective helmets. In addition, all employees of the Contractor and his subcontractors shall be provided with, and required to use, personal protective and life saving equipment as set forth in Subpart E of the OSHA Safety and Health Standards for Construction (29CFR 1926).

(b) PUBLIC SAFETY. During the performance of the work the Contractor shall erect and maintain temporary fences, bridges, railings, and barriers and shall take all other necessary precautions and place proper guards for the prevention of accidents and he shall erect and maintain suitable and sufficient lights and other signals.

- END OF SECTION -

(b) PUBLIC SAFETY. During the performance of the work the Contractor shall erect and maintain temporary fences, bridges, railings, and barriers and shall take all other necessary precautions and place proper guards for the prevention of accidents and he shall erect and maintain suitable and sufficient lights and other signals.

- END OF SECTION -

SECTION 152 - SITE ACCESS

152.01 HIGHWAY LIMITATIONS

The Contractor shall make his own investigation of the condition of available public and private roads and of clearances, restrictions, bridge load limits, and other limitations affecting transportation and ingress and egress to the site of the work. It shall be the Contractor's responsibility to construct and maintain, at his own expense, any haul roads required for his construction operations.

152.02 TEMPORARY CROSSINGS

(a) GENERAL. Wherever necessary or required for the convenience of the public or individual residents at street or highway crossings, private driveways, or elsewhere, the Contractor shall provide suitable temporary bridges over unfilled excavations, except in such cases as the Contractor shall secure the written consent of the individuals or authorities concerned to omit such temporary bridges, which written consent shall be delivered to the Engineer prior to excavation. All such bridges shall be maintained in service until access is provided across the backfilled excavation. Temporary bridges for street and highway crossing shall conform to the requirements of the authority having jurisdiction in each case, and the Contractor shall adopt designs furnished by said authority for such bridges, or shall submit designs to said authority for approval, as may be required.

(b) STREET USE. Nothing herein shall be construed to entitle the Contractor to the exclusive use of any public street, alley, way, or parking area during the performance of the work hereunder, and he shall so conduct his operations as not to interfere unnecessarily with the authorized work of utility companies or other agencies in such streets, alleys, ways, or parking areas. No street shall be closed to the public without first obtaining permission of the Engineer and proper governmental authority. Where excavation is being performed in primary streets or highways, one lane in each direction shall be kept open to traffic at all times unless otherwise provided or shown. Toe boards shall be provided to retain excavated material if required by the Engineer or the agency having jurisdiction over the street or highway. Fire hydrants on or adjacent to the work shall be kept accessible to fire-fighting equipment at all times. Temporary provisions shall be made by the Contractor to assure the use of sidewalks and the proper functioning of all gutters, sewer inlets, and other drainage facilities.

(c) TRAFFIC CONTROL. For the protection of traffic in public or private streets and ways, the Contractor shall provide, place, and maintain all necessary barricades, traffic cones, warning signs, lights, and other safety devices in accordance with the requirements of the "Manual of Uniform Traffic Control Devices, Part VI - Traffic Controls for Street and Highway Construction and Maintenance Operations," published by U.S. Department of Transportation, Federal Highway Administration (ANSI D6.1-1978). The Contractor shall take all necessary precautions for the protection of the work and the safety of the public. All barricades and obstructions shall be illuminated at night, and all lights shall be kept burning from sunset until sunrise. The Contractor shall station such guards or flagmen and shall conform to such special safety regulations relating to traffic control as may be required by

the public authorities within their respective jurisdictions. All signs, signals, and barricades shall conform to the requirements of Subpart G, Part 1926, of the OSHA Safety and Health Standards for Construction.

(d) STREET CLOSURE. If closure of any street is required during construction, a formal application for a street closure shall be made to the authority having jurisdiction at least 30 days prior to the required street closure in order to determine necessary signing and detour requirements.

- END OF SECTION -

SECTION 154 - ENVIRONMENTAL CONTROLS

154.01 EXPLOSIVES AND BLASTING

The use of explosives on the work will not be permitted.

154.02 DUST ABATEMENT

The Contractor shall furnish all labor, equipment, and means required and shall carry out effective measures wherever and as often as necessary to prevent his operation from producing dust in amounts damaging to property, cultivated vegetation, or domestic animals, or causing a nuisance to persons living in or occupying buildings in the vicinity. The Contractor shall be responsible for any damage resulting from any dust originating from his operations. The dust abatement measures shall be continued until the Contractor is relieved of further responsibility by the Engineer. No separate payment will be allowed for dust abatement measures and all costs thereof shall be included in the Contractor's bid price.

154.03 RUBBISH CONTROL

During the progress of the work, the Contractor shall keep the site of the work and other areas used by him in a neat and clean condition, and free from any accumulation of rubbish. The Contractor shall dispose of all rubbish and waste materials of any nature occurring at the work site, and shall establish regular intervals of collection and disposal of such materials and waste. He shall also keep his haul roads free from dirt, rubbish, and unnecessary obstructions resulting from his operations. Equipment and material storage shall be confined to areas approved by the Engineer. Disposal of all rubbish and surplus materials shall be off the site of construction, at the Contractor's expense, all in accordance with local codes and ordinances governing locations and methods of disposal, and in conformance with all applicable safety laws, and to the particular requirements of Subpart H, Section 1926.252 of the OSHA Safety and Health Standards for Construction.

154.04 SANITATION

(a) TOILET FACILITIES. Fixed or portable chemical toilets shall be provided wherever needed for the use of employees. Toilets at construction job sites shall conform to the requirements of Subpart D, Section 1926.51 of the OSHA Standards for Construction.

(b) SANITARY AND OTHER ORGANIC WASTES. The Contractor shall establish a regular daily collection of all sanitary and organic wastes. All wastes and refuse from sanitary facilities provided by the Contractor or organic material wastes from any other source related to the Contractor's operations shall be disposed of away from the site in a manner satisfactory to the Engineer and in accordance with all laws and regulations pertaining thereto. Disposal of all such wastes shall be at the Contractor's expense.

154.05 CHEMICALS

All chemicals used during project construction or furnished for project operation, whether defoliant, soil sterilant, herbicide, pesticide, disinfectant, polymer, reactant or of other classification, shall show approval of either the U.S. Environmental Protection Agency or the U.S. Department of Agriculture. Use of all such chemicals and disposal of residues shall be in strict accordance with the printed instructions of the manufacturer.

- END OF SECTION -

SECTION 160 - PROTECTION AND RESTORATION OF EXISTING FACILITIES

160.01 GENERAL

(a) The Contractor shall protect all existing utilities and improvements not designated for removal and shall restore damaged or temporarily relocated utilities and improvements to a condition equal to or better than they were prior to such damage or temporary relocation, all in accordance with requirements specified herein, and in accordance with the requirements of the Contract Documents.

(b) The Contractor shall determine the exact locations and depths of all utilities indicated on the drawings. In addition to those indicated, the Contractor shall make exploratory excavations of all utilities. All such exploratory excavations shall be performed as soon as practicable after award of contract and, in any event, a sufficient time in advance of construction to avoid possible delays to the Contractor's work. When such exploratory excavations show the utility location as indicated on the drawings to be in error, the Contractor shall so notify the Engineer.

(c) The number of exploratory excavations required shall be that number which is sufficient to determine the alignment of the utility. All costs for such work shall be absorbed by the Contractor.

160.02 PROTECTION OF STREET OR ROADWAY MARKERS

The Contractor shall not destroy, remove, or otherwise disturb any existing survey markers or other existing street or roadway markers without proper authorization. No pavement breaking or excavation shall be started until all survey or other permanent marker points that will be disturbed by the construction operations have been properly referenced for easy and accurate restoration. It shall be the Contractor's responsibility to notify the proper representatives of the Owner of the time and location that work will be done. Such notification shall be sufficiently in advance of construction so that there will be no delay due to waiting for survey points to be satisfactorily referenced for restoration. All survey markers or points disturbed, without proper authorization by the Engineer, will be accurately restored by the Owner at the Contractor's expense after all street or roadway resurfacing has been completed.

160.03 RESTORATION OF PAVEMENT

(a) GENERAL. All paved areas including asphaltic concrete berms cut or damaged during construction shall be replaced with similar materials and of equal thickness to match the existing adjacent undisturbed areas, except where specific resurfacing requirements have been called for in the Contract Documents or in the requirements of the agency issuing the permit. All temporary and permanent pavement shall conform to the requirements of the affected pavement owner. All pavements which are subject to partial removal shall be neatly saw cut in straight lines.

(b) TEMPORARY RESURFACING. Wherever required by the public authorities having jurisdiction, the Contractor shall place temporary surfacing promptly after backfilling and shall maintain such surfacing for the period of time

fixed by said authorities before proceeding with the final restoration of improvements. Temporary resurfacing shall be constructed in accordance with the following requirements:

(1) Prior to placing the temporary resurfacing, the foundation material underlying the areas to receive surfacing shall be densified to the degree specified in the Technical Provisions.

(2) The subgrade shall be uniformly watered sufficiently to eliminate all dust, but not to such extent as to form mud or pools of water. The street and surrounding area shall be cleared of rubbish and debris. The street shall be swept and the surrounding area shall be cleaned thoroughly.

(3) The temporary resurfacing shall then be spread over the prepared foundation material and rolled with an 8-ton tandem roller in such a manner that after rolling the temporary resurfacing shall present a smooth surface for traffic, shall not be less than one inch in compacted thickness and shall be maintained free from bumps and depressions until permanent resurfacing is placed. The finished surface of said temporary resurfacing shall be flush with the adjoining pavement grade.

(4) The Contractor shall stockpile enough temporary resurfacing material on the job to insure a ready supply at all times for necessary repairs to the temporary resurfacing already placed.

(5) The temporary resurfacing shall be left in place until permanent resurfacing is constructed.

(6) No separate payment will be allowed for temporary resurfacing and all costs therefor shall be included in the Contractor's bid price.

(c) PERMANENT RESURFACING. In order to obtain a satisfactory junction with adjacent surfaces, the Contractor shall saw cut back and trim the edge so as to provide a clean, sound, vertical joint before permanent replacement of an excavated or damaged portion of pavement. Damaged edges of pavement along excavations and elsewhere shall be trimmed back by saw cutting in straight lines. All pavement restoration and other facilities restoration shall be constructed to finish grades compatible with adjacent undisturbed pavement.

(d) RESTORATION OF SIDEWALKS OR PRIVATE DRIVEWAYS. Wherever sidewalks or private roads have been removed for purposes of construction, the Contractor shall place suitable temporary sidewalks or roadways promptly after backfilling and shall maintain them in satisfactory condition for the period of time fixed by the authorities having jurisdiction over the affected portions before proceeding with the final restoration or, if no such period of times is so fixed, the Contractor shall maintain said temporary sidewalks or roadways until the final restoration thereof has been made.

160.04 EXISTING UTILITIES AND IMPROVEMENTS

(a) GENERAL. The Contractor shall protect all utilities and other improvements which may be impaired during construction operations. It shall be the Contractor's responsibility to ascertain the actual location of all existing utilities and other improvements indicated on the drawings that will be encountered in his construction operations, and to see that such utilities or other improvements are adequately protected from damage due to such operations. The Contractor shall take all possible precautions for the protection of unforeseen utility lines to provide for uninterrupted service and to provide such special protection as may be directed by the Engineer.

(b) UTILITIES TO BE MOVED. In case it shall be necessary to move the property of any public utility or franchise holder, such utility company or franchise holder will, upon proper application by the Contractor, be notified by the Engineer to move such property within a specified reasonable time, and the Contractor shall not interfere with said property until after the expiration of the time stipulated.

(c) OWNER'S RIGHT OF ACCESS. The right is reserved to the Owner and to the owners of public utilities and franchises to enter at any time upon any public street, alley, right-of-way, or easement for the purpose of making changes in their property made necessary by the work of this Contract.

(d) KNOWN UTILITIES. Existing utility lines that are shown on the drawings or the locations of which are made known to the Contractor prior to excavation and that are to be retained, and all utility lines that are constructed during excavation operations shall be protected from damage during excavation and backfilling and, if damaged, shall be immediately repaired by the Contractor at his expense.

(e) UNKNOWN UTILITIES. In the event that the Contractor damages any existing utility lines that are not shown on the drawings or the locations of which are not made known to the Contractor prior to excavation, a written report thereof shall be made immediately to the Engineer. If directed by the Engineer, repairs shall be made by the Contractor under the provisions for changes and extra work contained in Articles 5.02 and 5.03 of the General Conditions.

(f) COSTS BORNE BY OWNER. All costs of locating, repairing damage not due to failure of the Contractor to exercise reasonable care, and removing or relocating such utility facilities not indicated in the plans and specifications with reasonable accuracy, and for equipment on the project which was actually working on that portion of the work which was interrupted or idled by removal or relocation of such utility facilities, and which was necessarily idled during such work will be paid for as extra work in accordance with the provisions of Articles 5.02 and 5.03 of the General Conditions.

(g) UTILITIES TO BE REMOVED. When utility lines that are to be removed are encountered within the area of operations, the Contractor shall notify the Engineer a sufficient time in advance for the necessary measures to be taken to prevent interruption of the service.

(h) APPROVAL OF REPAIRS. All repairs to a damaged improvement shall be inspected and approved by an authorized representative of the improvement owner before being concealed by backfill or other work.

(i) RELOCATION OF UTILITIES. Where the proper completion of the work requires the temporary or permanent removal and/or relocation of an existing utility or other improvement which is shown on the drawings, the Contractor shall at his own expense, remove and, without unnecessary delay, temporarily replace or relocate such utility or improvement in a manner satisfactory to the Engineer and the owner of the facility. In all cases of such temporary removal or relocation, restoration to former location shall be accomplished by the Contractor in a manner that will restore or replace the utility or improvement as nearly as possible to its former locations and to as good or better condition than found prior to removal.

(j) MAINTAINING IN SERVICE. All oil and gasoline pipelines, power and telephone or other communication cable ducts, gas and water mains, irrigation lines, sewer lines, storm drain lines, poles, and overhead power and communication wires and cables encountered along the line of the work shall be maintained continuously in service during all the operations under the Contract, unless other arrangements satisfactory to the Engineer are made with the owner of said pipelines, duct, main, irrigation line, sewer, storm drain, pole, or wire or cable. The Contractor shall be responsible for and shall make good all damage due to his operations, and the provisions of this Section shall not be abated even in the event such damage occurs after backfilling or is not discovered until after completion of the backfilling.

160.05 NOTIFICATION BY THE CONTRACTOR

Prior to any excavation in the vicinity of any existing underground facilities, including all water, sewer, storm drain, gas, petroleum products, or other pipelines; all buried electric power, communications, or television cables; all traffic signal and street lighting facilities; and all roadway and state highway rights-of-way the Contractor shall notify the respective authorities representing the owners or agencies responsible for such facilities not less than 3 working days nor more than 5 working days prior to excavation so that a representative of said owners or agencies can be present during such work if they so desire.

- END OF SECTION -

SECTION 170 - EQUIPMENT TESTING AND PLANT STARTUP

170.01 GENERAL

Equipment testing is requisite to satisfactory completion of the contract and, therefore, shall be completed within the contract time. Except where otherwise provided, all work, specified in this Section shall be performed at no additional cost to the Owner.

170.02 EQUIPMENT TESTING

(a) The Contractor shall provide the services of an experienced and authorized representative of the manufacturer or supplier of each item of equipment indicated in the equipment schedules (excluding manually-operated valves smaller than 24 inches in size, and any other minor items of equipment specifically exempted by the Engineer in writing, injectors, tanks, batch-type disc meters, and rotameters), who shall visit the site of the work and inspect, check, adjust if necessary, and approve the equipment installation. In each case, the Contractor shall arrange to have the equipment supplier's representative revisit the job site as often as necessary until any and all trouble is corrected and the equipment installation and operation are satisfactory to the Engineer.

(b) The Contractor shall require that each equipment supplier's representative furnish to the Engineer a written report addressed to the Owner certifying that the equipment has been properly installed and lubricated, is in accurate alignment, is free from any undue stress imposed by connecting piping or anchor bolts, and has been operated satisfactorily under full-load conditions.

(c) The Contractor shall be responsible for scheduling all operations testing. The Contractor is advised that the Engineer and the Owner's operating personnel will witness operations testing and that the equipment supplier's representative shall be required to instruct the Owner's operating personnel in correct operation and maintenance procedures. The proposed operations and maintenance procedures shall be submitted in writing to the City for their review and approval a minimum of two weeks in advance of scheduling such instruction. Such instruction shall be scheduled at a time arranged with the Owner at least 2 weeks in advance and shall be provided while the respective representative's equipment is fully operational. On-site instruction shall be given by qualified persons who have been made familiar in advance with the equipment and systems in the plant. The Contractor shall have previously furnished the technical manuals required under Section entitled "Contractor Submittals" of the Technical Provisions.

(d) The Contractor shall notify the Engineer at least 3 days in advance of each equipment test.

(e) The Contractor shall furnish all personnel, power, water, chemicals, fuel, oil, grease, and all other necessary equipment, facilities, and services required for conducting the tests.

- END OF SECTION -

SECTION 190 - PROJECT CLOSEOUT

190.01 FINAL CLEANUP

The Contractor shall promptly remove from the vicinity of the completed work, all rubbish, unused materials, concrete forms, construction equipment, and temporary structures and facilities used during construction. Final acceptance of the work by the Owner will be witheld until the Contractor has satisfactorily complied with the foregoing requirements for final cleanup of the project site.

190.02 CLOSEOUT TIMETABLE

The Contractor shall establish dates for equipment testing, acceptance periods, and on-site instructional periods (as required under the Contract). Such dates shall be established not less than one week prior to beginning any of the foregoing items, to allow the Owner, the Engineer, and their authorized representatives sufficient time to schedule attendance at such activities.

190.03 TECHNICAL MANUAL SUBMITTALS

The Contractor's attention is directed to the condition that one percent of the contract price will be deducted from any monies due the Contractor as progress payments, if at the 75 percent construction completion point, the approved technical manuals have not been submitted in accordance with Section entitled "Contractor Submittals" of the Technical Provisions. The aforementioned amount will be retained by the Owner as the agreed, estimated value of the approved technical manuals. Any such retention of money for failure to submit the approved technical manuals on or before the 75 percent construction completion point shall be in addition to the retention of any payments due to the Contractor as specified in Article 5.08 of the General Conditions of the Contract.

190.04 FINAL SUBMITTALS

The Contractor, prior to requesting final payment, shall obtain and submit the following items to the Engineer for transmittal to the Owner:

(a) Written guarantees, where required.

(b) Operating manuals and instructions.

(c) Keying schedule.

(d) Maintenance stock items; spare parts; special tools.

(e) Completed record drawings.

(f) Bonds for roofing, maintenance, etc., as required.

(g) Certificates of inspection and acceptance by local governing agencies having jurisdiction.

(h) Releases from all parties who are entitled to claims against the subject project, property, or improvement pursuant to the provisions of law.

190.05 MAINTENANCE AND GUARANTEE

(a) The Contractor shall comply with the maintenance and guarantee requirements contained in Article 6.04 of the General Conditions.

(b) Replacement of earth fill or backfill, where it has settled below the required finish elevations, shall be considered as a part of such required repair work, and any repair or resurfacing constructed by the Contractor which becomes necessary by reason of such settlement shall likewise be considered as a part of such required repair work unless the Contractor shall have obtained a statement in writing from the affected private owner or public agency releasing the Owner from further responsibility in connection with such repair or resurfacing.

(c) The Contractor shall make all repairs and replacements promptly upon receipt of written order from the Owner. If the Contractor fails to make such repairs or replacements promptly, the Owner reserves the right to do the work and the Contractor and his surety shall be liable to the Owner for the cost thereof.

190.06 BOND

The Contractor shall provide a bond to guarantee performance of the provisions contained in Paragraph "Maintenance and Guarantee" above, and Article 6.04 of the General Conditions.

- END OF SECTION -

SECTION 201 - EARTHWORK

201.01 TRENCH EXCAVATION, BACKFILLING AND COMPACTION

Trench excavation, backfilling, and compaction shall be in accordance with MAG Section 601.

Control of backfill compaction is the responsibility of the Contractor. He shall provide all necessary testing to control his compaction procedure.

Compaction tests will be made at locations and depths selected by the City to determine compliance with the specifications. The cost of these tests shall be paid by the City, however, the Contractor, at no expense to the City shall excavate and compact the backfill in order that these tests may be taken.

If the test results indicate that the compaction is less than specified, the contractor shall recompact the trench for such length as determined by the City. After recompaction, the City shall re-test the recompacted area. The cost of all re-testing shall be borne by the Contractor.

- END OF SECTION -

SECTION 203 - WELL CLEANING

203.01 INITIAL CLEANING

(a) The Contractor shall mobilize at the site and set up over the well with a cable tool rig. The well is presently capped with a steel plate which shall be removed.

(b) The well shall be chlorinated as required in subsection (c) herein. Prior to starting the chlorination procedure, the Contractor shall remove a layer of oil which has accumulated on the surface of the water in the well. The oil layer is approximately 15 feet in depth.

(c) The Contractor shall chlorinate the well using a wire basket attached to the bottom of a bailer. The basket shall be filled with 2 pounds of tablet form HTH (70%) or equivalent. Starting from the top of the well, the well shall be swabbed in 40-foot sections until all the HTH has dissolved. It is estimated that this task will require a minimum of 8 hours.

(d) Using a circular wire brush attached to several lengths of drill pipe, the Contractor shall brush the walls of the well and remove the scale from the 18-inch diameter casing. Periodically, a bailer shall be used to remove debris from the well. The same brushing and bailer procedure shall be employed to clean the 16-inch diameter casing down to a depth of 1,319 feet. It is estimated that this task will require a minimum of 8 hours.

(e) After the well has been thoroughly brushed and bailed, the Contractor shall provide all materials necessary to conduct airlift pumping. The well shall then be pumped to remove the debris in the well. Pumping shall continue until the discharge water is clear. The wastewater shall be discharged to the nearest sanitary sewer manhole or by an alternative method approved by the Engineer. It is estimated that this task will require a minimum of 8 hrs.

203.02 ACIDIZE THE WELL

(a) The Contractor shall add sufficient muriatic acid (30 percent HCL) or equivalent to the well to form a 10-percent solution. It is estimated that 5,200 gallons of muriatic acid will be required. The acid shall be introduced to the well through a pipe which is raised from the bottom of the well to the static water level at 120 foot intervals. There shall be 8 injection points and at each interval, approximately 650 gallons of acid shall be injected through the pipe.

(b) The Contractor shall agitate the acid solution in the well with a surge block for a minimum period of 4 hours in the perforated zones.

(c) The following day, the Contractor shall install an air lift pump in the well and pump the chemical solution to waste into a neutralization basin capable of holding 2,000 gallons. The basin can be built on site, but shall be plastic lined. The waste shall be neutralized with hydrated lime or its equivalent so that the discharge pH from the basin is greater than 5. A method shall be used to monitor the pH of the wastewater as frequently as every five minutes to a pH value of 4. The well shall be pumped until the pH

of the well water is approximately the same as the native groundwater (approximately 8.0).

The treated discharge from the basin shall be pumped to the nearest sanitary sewer manhole or to an alternative location as approved by the Engineer.

203.03 VIDEO SURVEY

The Contractor shall conduct a video survey of the entire cased section of the well from the ground surface to a depth of 1,319 feet. The blank video tape shall be provided by the Engineer. The video camera used by the Contractor shall be capable of providing a side scan survey for up to 100 feet of casing, as well as providing the standard wide angle video survey.

203.04 DISINFECTION

(a) The same chlorination procedure shall be used as described in Section 203.01.

(b) Chlorine or other compounds approved by the State or local regulatory agencies shall be used as disinfectants. Unless superseded by Governmental regulation, the quantity of chlorine compounds used for disinfection shall be sufficient to produce a minimum of 200 parts per million (ppm) available chlorine in solution when mixed with the total volume of water in the well.

203.05 COMPLETION OF WELL

Upon completion of all work in connection with cleaning, chemical treatment and testing, the well shall be capped by tack welding a 1/4-inch steel plate over the top of the casing.

203.06 SAFETY PROCEDURES

The Contractor shall follow all safety procedures for the handling of dangerous chemicals as specified. Safety equipment will include, but is not limited to, the following: the use of protective gloves, goggles, respirators, and overalls to protect the body from chemical burns. Adequate ventilation of the area must be provided at all times.

- END OF SECTION -

SECTION 204 - PAINTING AND COATINGS

204.01 GENERAL

(a) Where practicable, each succeeding coat of paint shall be of a different color. Where a particular color is specified herein, it is for bidding purposes only. Finish colors shall be as selected by the Engineer.

(b) Each coat shall produce a minimum dry film thickness as specified herein. In areas where this thickness is not developed sufficient additional coats shall be applied to produce it.

(c) Where alternate painting systems are specified, selection from among the alternates is at the Contractor's option.

(d) The Contractor may substitute other paint materials for those specified herein provided that he first receives written approval from the Engineer stating that said proposed substituted materials are equal to those specified and are approved for use in the work.

(e) Unless otherwise approved by the Engineer in writing, all coatings applied under a single paint system shall be the product of a single manufacturer.

(f) Manufacturer's printed instructions shall be strictly followed in the application of proprietary coatings.

(g) The painting and coating subcontractor must posses a valid, state license as required for performance of the painting and coating work called for in this Section.

(h) The paint materials shall be delivered to the job site in the manufacturer's unopened containers and a list of all batch numbers shall be furnished to the Engineer prior to the start of work.

(i) Care shall be exercised not to damage adjacent work during sandblasting operations. Blasted surfaces shall not be left overnight before coating.

(j) Paint shall not be applied in extreme heat, nor in dust or smoke laden air, nor in damp or humid weather.

(k) Drying times shall be not less than called for in manufacturer's printed instructions.

(l) Stainless steel surfaces shall not be painted.

(m) Drop cloths shall be placed where required to protect floors and equipment from splatter and droppings.

(n) Spray painting shall be conducted under controlled conditions, and the Contractor shall be fully responsible for any damage to adjacent work or adjoining property occurring from spray painting.

(o) Each coat will be inspected by the Engineer prior to application of the next coat. Areas found to contain runs, overspray, roughness, or other signs of improper application shall be required to be recoated in accordance with the Engineer's instructions.

(p) The Contractor shall provide forced air ventilation, in accordance with applicable regulations, while work is being accomplished inside a tank or other closed area.

(q) Except as otherwise provided for in these specifications, painting of steel tanks shall be in accordance with the "AWWA Standard for Painting Steel Water-Storage Tanks" (AWWA D102).

(r) Woodwork shall be sanded smooth and knots and pitch streaks shall be painted with a thick coat of orange shellac or a resin sealer, except for stained wood. Nail holes and minor imperfections shall be filled with putty between first and second coat; color of putty shall match stain in the case of stained work.

(s) Interior surfaces of ducts behind grilles and diffusers, where duct is visible, shall be painted flat black.

(t) Unless otherwise directed or permitted by the Engineer, all piping, vents, conduits, items of equipment, miscellaneous fixtures, appurtenances and the like, shall be painted to match the color of adjacent wall and ceiling surfaces.

(u) Color samples and stain samples shall be submitted as required by the Engineer. Submittals shall conform to the provisions of Section 130. Stain samples shall be provided on the same material as the stain will be applied in the final installation.

204.02 SAFETY AND HEALTH REQUIREMENTS

(a) GENERAL. In accordance with requirements of OSHA Safety and Health Standards for Construction (29 CFR1926) and the applicable requirements of regulatory agencies having jurisdiction, as well as manufacturer's printed instructions and appropriate technical bulletins and manuals, the Contractor shall provide and require use of personnel protective lifesaving equipment for persons working in or about the project site.

(b) HEAD AND FACE PROTECTION AND RESPIRATORY DEVICES. Equipment shall include protective helmets which shall be worn by all persons while in the vicinity of the work. In addition, workers engaged in or near the work during sandblasting shall wear eye and face protection devices and air purifying, halfmask or mouthpiece respirators with appropriate filters. Barrier creams shall be used on any exposed areas of skin.

(c) VENTILATION. Where ventilation is used to control hazardous exposure, all equipment shall be explosion-proof. Forced air ventilation shall be provided to reduce the concentration of air contaminant to the degree such that a hazard does not exist. Air circulation and exhausting of solvent vapors shall be continued until coatings have fully cured.

(d) SOUND LEVELS. Whenever the occupational noise exposure exceeds maximum allowable sound levels, the Contractor shall provide and require the use of approved ear protective devices.

(e) ILLUMINATION. Adequate illumination shall be provided while work is in progress, including explosion-proof lights and electrical equipment. Whenever required by the Engineer, the Contractor shall provide additional illumination to cover all areas to be inspected. The level of illumination for inspection purposes shall be determined by the Engineer.

(f) TEMPORARY LADDERS AND SCAFFOLDING. All temporary ladders and scaffolding shall conform to applicable safety requirements. They shall be erected where requested by the Engineer to facilitate inspection and shall be moved by the Contractor to locations as requested by the Engineer.

204.03 ATMOSPHERIC CONDITIONS

No coating shall be applied: (1) when the surrounding air temperature or the temperature of the surface to be coated is below 40 degrees F.; (2) to wet or damp surfaces or in rain, fog or mist; (3) when the temperature is less than 5 degrees F. above the dewpoint; or (4) when it is expected the air temperature will drop below 40 degrees F., or less than 5 degrees F. above the dewpoint within 8 hours after application of coating. Dewpoint shall be measured by use of a sling psychrometer in conjunction with U.S. Department of Commerce Weather Bureau psychrometric tables.

204.04 FACTORY-APPLIED COATINGS AND TOUCH-UP

Except where factory application of finish coatings is permitted elsewhere in these specifications or by the Engineer in writing, all items of equipment shall be finish-painted after installation with the color selected or approved by the Engineer. Shop priming will be permitted in all cases. Materials and application as specified herein shall govern regardless of whether coatings are factory-applied or field-applied. After installation, any damaged areas in prime or finish coatings shall be repaired as directed by the Engineer.

204.05 ALUMINUM METAL INSTALLATION

Where aluminum surfaces come in contact with concrete or with metals not compatible with aluminum (aluminum and galvanized surfaces considered compatible), the aluminum surfaces shall be prevented from coming into direct contact with such parts: (1) by painting the dissimilar materials with a prime coat of zinc-chromate primer or other suitable primer, followed by 1 or 2 coats of aluminum metal and masonry paint or other suitable protective coating, excluding those containing lead pigmentation, or (2) by painting the dissimilar material with a coating of heavy-bodied bituminous paint, or (3) by placing a good quality calking material between the aluminum and the dissimilar material.

204.06 CLEANUP

Upon completion of the work, all staging, scaffolding and containers shall be removed from the site or destroyed in a manner approved by the Engineer. Coating spots and oil or stain upon adjacent surfaces shall be removed and the job site cleaned. All damage to adjacent surfaces or facilities resulting from the work performed under the contract shall be cleaned, repaired or refinished to the satisfaction of the Engineer at no additional cost to the Owner.

204.07 WARRANTY INSPECTION

A warranty inspection shall be conducted during the eleventh month following completion of all coating and painting work. The Contractor or his authorized representative shall attend this inspection. All defective work shall be repaired in accordance with these specifications and to the satisfaction of the Owner or Engineer. The Owner may, by written notice to the Contractor, reschedule the warranty inspection within the contract guarantee period, or may cancel the warranty inspection altogether.

204.08 SYSTEM A - UNGALVANIZED FERROUS METAL, NORMAL ENVIRONMENT

(a) AREA OF APPLICATION. All ungalvanized ferrous metal, indoors and outdoors; exclusive of surfaces which are buried, submerged, inside a hydraulic structure, or specified elsewhere.

(b) SURFACE PREPARATION. Sandblasted per SSPC-SP-6 (Commercial Blast Cleaning), except that SSPC-SP-3 (Power Tool Cleaning) or SSPC-SP-2 (Hand Tool Cleaning) will be permitted if Engineer determines that sandblasting will damage adjacent work.

(c) COATING

(1) AMERON ALTERNATE. Prime coat Amercoat 185 (3 mils). Finish coats (minimum of 2) Amercoat 5401 (3 mils). Total thickness of system (6 mils).

(2) ENGARD ALTERNATE. Prime coat Engard 126 (3 mils). Finish coats (minimum of 2) Engard 222 (3 mils). Total thickness of system (6 mils).

(3) KOPPERS ALTERNATE. Prime coat Koppers 622 HB (3 mils). Finish coats (minimum of 2) Koppers 501 (3 mils). Total thickness of system (6 mils).

204.09 SYSTEM H - FERROUS METAL, BURIED, OR SUBMERGED IN WASTEWATER

(a) AREA OF APPLICATION. All ungalvanized and galvanized ferrous metal, buried, submerged, intermittently submerged, or inside a hydraulic structure, except where another coating system is specifically indicated.

(b) SURFACE PREPARATION. Sandblasted per SSPC-SP-5 (White Metal Blast Cleaning).

(c) COATING

(1) AMERON ALTERNATE. Prime coat Amercoat 71 (1-1/2 mils). Finish coats (minimum of 2) Amercoat 78 HB (16 mils). Total thickness of system (17-1/2 mils). NOTE: Prime coat is for use as a shop primer only. Prime coat shall be omitted when both surface preparation and coating are to be performed in the field.

(2) ENGARD ALTERNATE. Prime coat Engard 422 (1-1/2 mils). Finish coats (minimum of 2) Engard 464 (16 mils). Total thickness of system (17-1/2 mils). NOTE: Prime coat is for use as a shop primer only. Prime coat shall be omitted when both surface preparation and coating are to be performed in the field.

(3) KOPPERS ALTERNATE. Prime coat Koppers 654 (1-1/2 mils). Finish coats (minimum of 2) Koppers 300-M (16 mils). Total thickness of system (17-1/2 mils). NOTE: Prime coat is for use as a shop primer only. Prime coat shall be omitted when both surface preparation and coating are to be performed in the field.

204.10 SYSTEM J - BURIED GALVANIZED AND BLACK STEEL PIPE

(a) SURFACE PREPARATION. Cleaned per SSPC-SP-3 (Power Tool Cleaning).

(b) WRAPPING. Prior to wrapping the pipe with PVC tape, the pipe first shall be primed using a primer recommended by the PVC tape manufacturer. After being primed, the pipe shall be wrapped with a 20-mil adhesive PVC tape, half-lapped, to a total thickness of 40 mils.

204.11 SYSTEM K - BURIED MISCELLANEOUS FERROUS SURFACES, COUPLINGS, VALVES, AND FLANGED JOINTS (EXCLUDING PIPE)

(a) SURFACE PREPARATION. Surfaces shall be thoroughly cleaned of all oil, grease, or other contaminants.

(b) COATING. Rich portland cement mortar coating to a minimum thickness of 1/8-in, following which such surfaces shall be enclosed in an 8-mil thick polyethylene sheet with all joints and edges lapped and sealed with tape.

- END OF SECTION -

SECTION 205 - CONCRETE

205.01

Concrete shall conform to the requirements of the MAG Standard Specification Sections 505 and 725 and the "Standard Specifications for Ready-Mixed Concrete" (ASTM C94), subject to the modifications and supplemental requirements contained in these specifications.

205.02

Thrust block and encasement concrete shall have a minimum 28-day compressive strength of 2,000 psi; all other concrete shall have a minimum 28-day compressive strength of 3,000 psi.

205.03

Except as may be otherwise provided in these specifications, cement shall conform to the "Standard Specification for Portland Cement" (ASTM C150) and shall be either Type II or Type V.

205.04

Aggregates shall conform to the "Standard Specifications for Concrete Aggregates" (ASTM C33). Coarse aggregate shall be of 1-1/2 inch maximum size.

205.05

The maximum slump for concrete to be used in footings and slabs shall be 3 inches; the maximum slump for all other concrete shall be 4 inches.

205.06

Forms for exposed concrete structures shall be of new Plyform at least 5/8 of an inch thick. All other forms shall be of smooth tongue and groove boards, shiplap, or plywood. Exposed vertical corners of all concrete structures shall be given a 3/4-inch chamfer. Forms shall not be removed until permission to do so has been received from the Engineer.

205.07

As concrete is placed in forms or in excavations, it shall be thoroughly settled and compacted throughout the entire depth of the layer which is being consolidated, into a dense homogeneous mass. Except in special cases where their use is deemed impracticable by the Engineer, the Contractor shall use high-speed internal vibrators of an approved immersion type.

205.08 FINISH OF CONCRETE SURFACES

(a) All finished or formed surfaces shall conform accurately to the shape, alignment, grades and sections as shown or ordered. Surfaces shall be free of fins, bulges, ridges, offsets, honeycombing, or roughness of any kind, and shall present a finished, smooth, continuous, hard surface.

(b) Exposed unformed surfaces of concrete shall be given a steel trowel finish. Excessive floating of surfaces while the concrete is plastic will not be permitted. Dusting on of dry cement or sand to absorb excess moisture will not be permitted. Unless otherwise shown, the edges of all exposed horizontal surfaces shall be finished with an edging tool to a radius of 1/2 of an inch.

205.09 CURING

All structural concrete shall be cured by being kept moist for 14 days after placing, or at the option of the Contractor, may be cured by use of a curing compound. The curing compound shall be Hunt Process 225-TU as manufactured by Hunt Process Co., Santa Fe Springs, CA; Select Cure CRB as manufactured by Select Products Co., Upland, CA; or equal. The curing compound shall contain a fugitive dye so that areas of application will be readily distinguishable. Encasement concrete and thrust blocks may be covered with earth 24 hours after placing.

- END OF SECTION -

SECTION 208 - REINFORCEMENT STEEL

208.01 GENERAL

(a) The Contractor shall furnish, fabricate, and install all reinforcement steel as shown and specified. The work shall further include the furnishing and installation of all tie wires, clips, supports, chairs, spacers, and other appurtenances necessary to fulfill the requirements of the specifications and produce finished concrete structures.

(b) Unless the Engineer issues a waiver in writing, the Contractor shall furnish shop bending diagrams, placing lists, and drawings of all reinforcement steel prior to fabrication in accordance with Section 130. Review of shop drawings by the Engineer will be limited to general compliance with the contract drawings. The Contractor shall be fully responsible for accuracy of dimensions and details, and said dimensions and details will be checked in the field by the Engineer at the time of placement.

208.02 MATERIALS

Reinforcement steel shall be deformed steel bars, or cold-drawn steel wire, or fabricated forms of those materials, as required by the applicable drawings and specifications. Materials shall conform in quality to the requirements of the "Specifications for Deformed Billet-Steel Bars for Concrete Reinforcement" (ASTM A 615) Grade 40 or Grade 60 as shown.

208.03 INSTALLATION

(a) CLEANING. Reinforcement steel, before being positioned, shall be free from loose mill and rust scale, and from coatings that may destroy or reduce the bond. Where there is delay in depositing concrete, reinforcement steel shall be reinspected and cleaned when necessary.

(b) FABRICATION. Reinforcement steel shall be accurately formed to the dimensions and shapes indicated on the applicable drawings, and the fabricating details shall be prepared in accordance with the "ACI Building Code" (ACI 318), except as modified by the drawings. Stirrups and tie bars shall be bent around a pin having a diameter not less than 1-1/2 inch for No. 3 bars, 2-inch for No. 4 bars, and 2-1/2 inch for No. 5 bars. Bends for other bars shall be made around a pin having a diameter not less than 6 times the minimum thickness, except for bars larger than 1 inch, in which case the bends shall be made around a pin of 8 bar diameters. Bars shall be bent cold.

(c) STRAIGHTENING. Reinforcement steel shall not be straightened or rebent in a manner that will injure the metal. Bars with kinks or bends not shown on the drawings shall not be used. Heating of the reinforcement will be permitted only when approved by the Engineer.

(d) PLACING. Reinforcement steel shall be accurately positioned in accordance with the drawings and secured by using annealed iron wire ties or suitable clips at intersections, and shall be supported by concrete or metal supports, spacers, or metal hangers. Metal clips or supports shall not be placed in contact with the forms. Tie wires shall be bent away from the forms in order to provide the specified concrete coverage. Bars additional to those shown on the drawings

which may be found necessary or desirable by the Contractor for the purpose of securing reinforcement in position shall be provided by the Contractor at his own expense.

(e) SPLICING. When it is necessary to splice reinforcement at points other than whereshown, the character of the splice shall be determined by the Engineer. When not otherwise shown, the lapping of splices shall be 32 bars diameters. Reinforcement bars, other than tie bars, shall not be spliced at points other than shown on the approved shop bending diagrams and placing lists. Laps of wire mesh shall be in accordance with the "ACI Building Code" (ACI 318), and adjoining sheets shall be securely tied together with No. 14 tie wire, one tie for each 2 running feet. Wires shall be staggered and tied in such a manner that they cannot slip.

- END OF SECTION -

SECTION 209 - STRUCTURAL STEEL AND MISCELLANEOUS METALWORK

209.01 GENERAL

The Contractor shall furnish, fabricate and install all structural steel and miscellaneous metalwork as specified and shown. All structural steel shapes, plates, bars, and their products shall conform to the "Specifications for Structural Steel" (ASTM A36). Unless otherwise shown, structural steel and miscellaneous metalwork of fabricated steel, which will be used in a corrosive environment and/or will be submerged in water/wastewater (1) shall be coated in accordance with Section 204 and (2) shall not be galvanized prior to coating. All structural steel and other miscellaneous metalwork shall be hot-dipped galvanized after fabrication in accordance with Paragraph 209.04. Unless otherwise shown, stainless steel metalwork shall be of Type 18-8 stainless steel and shall not be galvanized. Shop drawings of all structural steel and miscellaneous metalwork shall be submitted to the Engineer for review in accordance with Section 130.

209.02 FABRICATION AND ERECTION

Except as otherwise shown, the design, fabrication, and erection of structural steel shall conform to the requirements of the American Institute of Steel Construction "Manual of Steel Construction".

209.03 WELDING

(a) All welding shall be by the metal-arc method or gas-shielded arc method as described in the American Welding Society's "Welding Handbook" as supplemented by other pertinent standards of the AWS. Qualification of welders shall be in accordance with the AWS Standards governing same.

(b) In assembly and during welding, the component parts shall be adequately clamped, supported and restrained to minimize distortion and for control of dimensions. Weld reinforcement shall be as specified by the AWS code. Upon completion of welding, all weld splatter, flux, slag, and burrs left by attachments shall be removed. Welds shall be repaired to produce a workmanlike appearance, with uniform weld contours and dimensions. All sharp corners of material which is to be painted or coated shall be ground to a minimum of 1/32-inch on the flat.

209.04 GALVANIZING

All structural steel plates, shapes, bars and fabricated assemblies required to be galvanized shall, after the steel has been thoroughly cleaned of rust and scale, be galvanized in accordance with the "Specification for Zinc (Hot-Galvanized) Coating on Products Fabricated from Rolled, Pressed and Forged Steel Shapes, Plates, Bars and Strip" (ASTM A123). Any galvanized part that becomes warped during the galvanizing operation shall be straightened. Bolts, anchor bolts, nuts and similar threaded fasteners, after being properly cleaned, shall be galvanized in accordance with the "Specifications for Zinc Coating (Hot-Dip) on Iron and Steel Hardware" (ASTM A153). Field repairs to galvanizing shall be made using "Galvinox", "Galvo-Weld," or approved equal.

209.05 BOLTS

(a) The Contractor shall furnish and set all bolts and anchor bolts. Except where otherwise shown or specified, all bolts, anchor bolts, and nuts shall be steel, galvanized after fabrication in accordance with Paragraph 209.04. Threads on galvanized bolts and nuts shall be formed with suitable taps and dies such that they retain their normal clearance after hot-dip galvanizing.

(b) Except as otherwise provided herein, steel for bolts, anchor bolts and cap screws shall be in accordance with "Specifications for Carbon Steel Externally and Internally Threaded Standard Fasteners," Grade B (ASTM A307) or threaded parts of ASTM A36 and shall meet the following additional requirements:

(1) The nut material shall be free-cutting steel, and (2) The nuts shall be capable of developing the full strength of the bolts. Threads shall be Coarse Thread Series conforming to the requirements of the American Standard for Screw Threads. All bolts and cap screws shall have hexagon heads and nuts shall be Heavy Hexagon Series.

(c) Unless otherwise shown, all bolts, anchor bolts and nuts which are buried, submerged, or below the top of the wall inside any hydraulic structure shall be of Type 18-8 stainless steel.

(d) Unless otherwise shown, expanding-type anchors shall be steel expansion type Phillips Drill Company "Red Head" anchors, McCulloch Industries "Kwick-Bolt," or equal. Lead calking anchors will not be permitted. Size shall be as shown. Expansion type anchors which are to be embedded in grout may be steel. Non-embedded buried or submerged anchors shall be stainless steel in accordance with Subparagraph (c) herein.

209.6 POWER-DRIVEN PINS

(a) MATERIALS. Power-driven pins to be installed in concrete or steel shall be heat-treated steel alloy. If the pins are not inherently sufficiently corrosion-resistant for the conditions to which they are to be exposed, they shall be protected in an acceptable manner. Pins shall have capped or threaded heads capable of transmitting the loads the shanks are required to support. Pins that are connected to steel shall have longitudinal serrations around the circumference of the shank. Complete information describing pin capacity, connections, and proposed use locations shall be furnished to the Engineer.

(b) INSTALLATION. Power-driven pins shall be installed by a craftsman who is certified by the manufacturer as being qualified to install the manufacturer's pins. Pins shall be driven in one initial movement by an instantaneous force that has been carefully selected to attain the required penetration. Driven pins shall conform to the following requirements:

Material penetrated by pin	Material's minimum thickness	Pin's shank penetration in supporting material	Minimum space from pin's CL to edge of penetrated material	Minimum pin spacing
Concrete	16D	6D minimum	14D	20D
Steel	1/4-inch	Steel thickness plus 2D	4D	7D

D-Pin's shank diameter

- END OF SECTION -

SECTION 214 - PIPING

214.01 GENERAL

(a) The Contractor shall furnish and install all pipe, fittings, closure pieces, supports, bolts, nuts, gaskets, jointing materials, and appurtenances as shown and specified, and as required for a complete and workable piping system.

(b) All bolts, nuts, and studs used in the assembly of piping shall conform to the requirements of Section 209.

(c) All exposed piping shall be adequately supported with devices of appropriate design. Where details are shown, the supports shall conform thereto and shall be placed as indicated; provided that support for all piping shall be complete and adequate regardless of whether or not supporting devices are specifically shown.

(d) All water line construction shall be in accordance with the requirements of the MAG Standard Specification Section 610, subject to the modifications and supplemental requirements contained in these specifications.

214.02 SMALL STEEL PIPE

Unless otherwise shown, galvanized steel pipe and black steel pipe in sizes 6 inches in diameter and smaller shall conform to the requirements of the "Specifications for Black and Hot-Dip Zinc-Coated (Galvanized) Welded and Seamless Steel Pipe for Ordinary Uses" (ASTM A120), and shall be standard weight. Galvanized steel pipe shall not be cement mortar lined unless otherwise shown. Fittings for galvanized steel pipe shall be of galvanized malleable iron. Buried galvanized or black steel pipe shall be coated as specified in Section 204 or provided with an extruded high density polyethylene coating with minimum thickness of 35 mils

214.03 DUCTILE IRON PIPE

(a) GENERAL. Ductile iron pipe and fittings shall conform to the requirements of the MAG Specification Section 750, subject to the modifications and supplemental requirements contained in these specifications.

(b) DUCTILE IRON PIPE. Ductile iron pipe shall be of thickness Class 50 and shall conform to the requirements of the "American National Standard for Ductile Iron Pipe, Centrifugally Cast in Metal Molds or Sand-Lined Molds for Water or Other Liquids" (ANSI A21.51 AWWA C151) and "American National Standard for the Thickness Design of Ductile Iron Pipe (ANSI A21.50 AWWA C150).

(c) DUCTILE IRON FITTINGS. Ductile iron fittings shall conform to the "American National Standard for Gray Iron and Ductile Iron Fittings for Water and Other Liquids" (ANSI/AWWA C110) and shall be of 250 psi pressure rating.

(d) DUCTILE IRON PIPE JOINTS. Ductile iron pipe shall be furnished with mechanical joints, flanged joints, flexible couplings as required and shall

conform to the "American National Standard for Rubber-Gasket Joints for Cast Iron and Ductile Iron Pressure Pipe and Fittings" (ANSI A21.11 AWWA C111) and the "American National Standard for Flanged Cast Iron and Ductile Iron Pipe with Threaded Flanges" (ANSI A21.15 AWWA C115).

(e) CEMENT MORTAR LINING. Ductile iron pipe and fittings shall be lined with cement mortar in accordance with the requirements of the "American National Standard for Cement Mortar Lining for Cast Iron and Ductile Iron Pipe and Fittings for Water" (ANSI A21.4 AWWA C104) except that lining shall be double thickness, i.e., not less than 1/8 of an inch for pipe 3-12 inches in diameter.

(f) INSTALLATION. Ductile iron pipe shall be installed in accordance with Section 214.10(d) and also in accordance with the "American National Standard for Installation of Gray and Ductile Cast-Iron Water Mains and Appurtenances" (ANSI/AWWA C600). Buried pipe shall be polyethylene-encased in accordance with the "American National Standard for Polyethylene Encasement for Gray and Ductile Cast-Iron Piping for Water and Other Liquids" (ANSI A21.5/AWWA C105).

214.04 COPPER TUBING

Copper tubing shall conform to the requirements of the "Specifications for Seamless Copper Water Tube" (ASTM B88), and shall be Type K (soft). Fittings shall be soldered or sweated on and shall be of cast bronze or forged brass containing 85 percent copper.

214.05 ASBESTOS-CEMENT WATER PIPE

(a) MATERIALS. Asbestos-cement water pipe shall conform to the requirements of the MAG Standard Specification Section 752, subject to the modifications and supplemental requirements contained in these specifications.

Unless otherwise shown, asbestos-cement water pipe shall conform to the "AWWA Standard for Asbestos-Cement Pressure Pipe, 4 In. Through 24 In. for Water and Other Liquids" (AWWA C400), Class 150, provided however, that joints shall be "Ring-tite" as manufactured by Johns-Manville; "Fluid-tite" as manufactured by Certainteed Products Corp.; or equal. Fittings shall be of cast iron conforming in general to the requirements of the "American National Standard for Gray-Iron and Ductile-Iron Fittings, 2 In. Through 48 In. for Water and Other Liquids" (AWWA C110), provided however, that the ends shall be designed for said Ring-tite or Fluid-tite joints. Fittings shall be cement-mortar lined.

(b) INSTALLATION

(1) GENERAL. Asbestos-cement pipe shall be installed in accordance Section 214.01(d) and also in accordance with the "AWWA Standard for Installation of Asbestos-Cement Water Pipe" (AWWA C603), subject to the following additional requirements: Pipe shall not be laid using earth mounds. In order to prevent accumulations of air and to enable the pipeline to be drained, asbestos-cement pipelines shall not have any high or low points except where shown.

(2) INSPECTION. Prior to installation, all asbestos-cement pipe and couplings and all rubber rings shall be inspected for damage and defects in material and workmanship. All damaged or defective materials shall be rejected and removed from the job site.

(3) JOINTING TO CAST IRON. Joints between asbestos-cement pipe and cast-iron valves and fittings shall be "Ring-Tite" joints, or equal, sealed with a rubber ring gasket. After assembling the joint, the position of the rubber ring gaskets shall be located an even distance from the face of the valve or fitting, for the full circumference of the pipe.

(4) LAYING COPPER WIRE WITH ASBESTOS-CEMENT PIPE. Asbestos-cement pipelines shall be provided with No. 14 A.W.G. bare copper wire laid along the top of the pipe and held in place with ties or hitches of the same kind of wire. The ties or hitches shall be spaced not more than 13 feet apart. The copper wire is to be used in the future as a means of locating the pipe with an electronic-type pipe locater. As an alternative to copper wire, the Contractor may elect to provide pipe locating tape manufactured for this purpose. In such case, the Contractor shall furnish manufacturer's literature, in accordance with Section 130, completely describing the tape proposed to be furnished. No tape shall be used prior to receipt of written approval of the Engineer.

214.06 PVC (POLYVINYL CHLORIDE) PIPE

PVC pipe shall be made from all new rigid unplasticized polyvinyl chloride and shall be Normal Impact (Type I) Schedule 80, unless otherwise shown. Elbows and tees shall be of the same material as the pipe. Unless otherwise shown, joints shall be solvent-welded in accordance with the manufacturer's instructions. Expansion joints or pipe bends shall be provided to absorb pipe expansion over a temperature range of 100 degrees F.

214.07 MECHANICAL-TYPE COUPLINGS

Mechanical-type couplings shall be designed for a water working pressure not less than the design pressure of the pipe on which they are to be installed. Couplings for steel pipe shall be Gustin-Bacon, Victaulic Style 44, or equal, when pipe ends are banded, and Gustin-Bacon, Victaulic Style 77, or equal, when pipe ends are grooved, and shall be equipped with Grade H rubber gaskets. Couplings for ductile iron pipe shall be Gustin-Bacon, Victaulic Style 31, or equal, and shall be equipped with Grade M gaskets. Buried or submerged couplings shall be provided with Type 18-8 stainless steel bolts and nuts.

214.08 SLEEVE-TYPE COUPLINGS

Sleeve-type couplings shall be provided where shown, and shall be Rockwell , Style 411 equivalent styles manufactured by Dresser, or equal. Couplings shall be of steel with steel bolts, without pipe stop, and shall be of sizes to fit the pipe and fittings shown. The middle ring shall be not less than

1/4-inch in thickness and shall be either 5 or 7 inches long for standard steel couplings, and 16 inches long for long-sleeve couplings. Bolts for exposed couplings shall be hot-dip galvanized. Bolts for buried or submerged couplings shall be of type 18-8 stainless steel. Buried sleeve-type couplings shall be epoxy-coated at the factory as specified in Section 215.

214.09 GASKETS AND BOLTS

(a) Except as otherwise provided, gaskets for flanged joints shall be 1/16-inch thick laminated asbestos fiber or 1/8-inch thick rubber fabric.

(b) Wherever blind flanges are shown, the gaskets shall consist of 1/8-inch thick cloth-inserted rubber sheet which shall cover the entire inside surface of the blind flange and shall be cemented to the surface of the blind flange.

(c) Except as otherwise provided, bolts shall conform to the requirements of Section 209.

214.10 INSULATING CONNECTIONS

(a) GENERAL. Insulating bushings, unions, couplings or flanges, as appropriate, shall be used for joining pipes of dissimilar metals, and for piping systems where corrosion control and cathodic protection are involved.

(b) MATERIAL. Insulating connections shall be of nylon, teflon, polycarbonate, polyethylene or other non-conductive materials, and shall have ratings and properties to suit the service and loading conditions.

(c) INSTALLATION. All unsulating connections shall be installed in accordance with manufacturer's printed instructions.

214.11 PRESSURE GAGES

Pressure gages shall be provided on suction and discharge connections to pumps as specified under pumps; on discharge connections from blowers and compressors; each side of pressure reducing valves; and where shown. Gages shall be quality industrial type with stainless steel movement and stainless steel or alloy case. Unless otherwise shown, pressure gages shall have a 3-1/2 inch dial, 1/4 inch threaded connection and a shut-off valve. Gages shall be calibrated to read in applicable units, with an accuracy of ± 1 percent, to 150 percent of the working pressure of the pipe or vessel to which they are connected. Gages attached to systems involving chemical solutions, sludge, sewage or other liquids containing solids, shall be equipped with diaphragm seals or equivalent protective pressure sensing devices. Gages shall be as manufactured by U.S. Gauge, Foxboro, Marsh, or equal.

- END OF SECTION -

SECTION 215 - VALVES AND GATES

215.01 GENERAL

(a) The Contractor shall furnish and install all valves and gates as shown and specified. In addition, valve-operating units, stem extensions and other accessories shall be furnished and installed by the Contractor where shown, or where required in the opinion of the Engineer, to provide for convenience in operation. Where buried valves are indicated, the Contractor shall furnish and install valve boxes to grade. All valves and gates shall be new and of current manufacture. All gates shall be adequately braced to prevent warpage and bending under the intended use. All shut-off valves, 6-inch and larger, shall have operators with position indicators. Where buried, these valves shall be provided with valve boxes and covers containing position indicators.

(b) The flanges of valves may be raised or plain faced. Flanges of valves for water-working pressures of 175 psi or less shall be faced and drilled to 125-lb American Standard template. Flanges of valves for water-working pressures greater than 175 psi shall be faced and drilled to 250-lb American Standard template.

(c) Unless otherwise specified, each valve body shall be tested under a test pressure equal to twice its design water-working pressure.

(d) Unless otherwise specified, all interior bronze parts of valves except gate valve stems, shall conform to the requirements of the "Specification for Composition Bronze or Ounce Metal Castings," (ASTM B62). Gate valve stems shall be of bronze containing not more than 5 percent of zinc nor more than 2 percent of aluminum, and shall have a minimum tensile strength of 60,000 psi, a yield strength of 40,000 psi, and an elongation of at least ten percent in 2 inches, as determined by a test coupon poured from the same ladle from which the valve stems to be furnished are poured.

(e) Except where otherwise provided, ferrous surfaces, exclusive of stainless steel surfaces, in the water passages of all valves four-inch and larger, as well as the exterior surfaces of all submerged valves, shall be epoxy coated as specified in Paragraph 215.02.

(f) Shop drawings of all valves and operators including wiring diagrams and electrical data, shall be furnished as specified in Section 130.

(g) Where designated, certain valves and gates shall be furnished with electric operators provided by the valve or gate manufacturer. All operators of a given type shall be furnished by the same manufacturer. Where these operators are supplied by different valve manufacturers, the Contractor shall coordinate their operator selections to provide uniformity of each type of electric operator.

(h) Valves and operators in particular locations may require a combination of units, sensors, limit switches, and controls specified in other divisions of these Specifications. It shall be the responsibility of the Contractor to properly assemble and install these various items so that all systems are compatible and operating properly. The relationship between interrelated items shall be clearly noted on shop drawing submittals.

(i) Except when such requirement is waived by the Engineer in writing, a label shall be provided on all shut-off valves exclusive of hose bibbs and chlorine cylinder valves. The label shall be of 1/16-inch plastic, 2 inches by 4 inches in size, shall have white lettering on black background, and shall be permanently attached to the valve or on the wall adjacent to the valve as directed by the Engineer. The Contractor shall submit a schedule of valves to be labeled indicating in each case the valve location and the proposed wording for the label.

215.02 EPOXY COATING

(a) GENERAL. Where specified or shown, an epoxy coating shall be applied as specified herein.

(b) MATERIAL

(1) Except as otherwise provided herein, the material used shall be 100 percent powder epoxy and shall be 3-M Company "Scotchcoat," Michigan Chrome and Chemical Company "Miccron 650 or 651," or equal.

(2) Where, in the Engineer's opinion, because of the nature of the item being coated, it would be impossible to use the powder epoxy method without causing damage to the item, the use of a liquid epoxy will be permitted. Liquid epoxy shall be 3-M Company No. 302, SOC-CO Plastic Coating Co. Keysite 740, or equal.

(c) SURFACE PREPARATION. The surface shall be blast-cleaned in accordance with SSPC-SP-5 (White Metal Blast Cleaning). The grit size used shall be as recommended by the epoxy manufacturer.

(d) APPLICATION. Application of the epoxy coating shall be in accordance with the manufacturer's instructions, provided that, if liquid epoxy is permitted, it shall be applied in not less than 3 spray coats to give the required total thickness.

(e) THICKNESS OF COATING. The minimum dry coating thickness shall be 8 mils, except that the thickness of coating in the grooves for valves or fittings designed to receive a rubber gasket shall be approximately 5 mils.

(f) INSPECTION. Coating thickness shall be checked with a non-destructive magnetic type thickness gage. Coating integrity shall be tested with a sponge testing unit operating at approximately 60 volts. All pinholes shall be marked, repaired and retested. No pinholes or other irregularities will be permitted in the final coating.

(g) FIELD REPAIRS. If small local repairs are necessary, they shall be made using a liquid epoxy recommended by the manufacturer of the epoxy with which the item was initially coated. The surface shall first be hand-tool cleaned in accordance with SSPC-SP-2 (Hand Tool Cleaning). The repair epoxy material shall be applied in accordance with the manufacturer's instructions.

215.03 GATE VALVES

Gate Valves shall conform to the requirements of MAG Standard Specification Section 630, except as modified herein. Gate valves for water service shall conform to the "Standard for Gate Valves for Ordinary Water Works Service" (AWWA C509). Valves shall be of the resilient seated, solid wedge type with a rising stem, opening to the left, and provided with a 2-inch square operating nut or handwheel, as shown. Valves shall be flanged or have ends to match pipe and O-ring seals. All corrosive ferrous surfaces of the valves, 4-inch and larger, which will be in contact with water, shall be epoxy-coated as specified in Subparagraph 215.01(e).

215.04 SWING CHECK VALVES

Swing check valves shall be of the outside lever and spring or weight type, designed for a water-working pressure of 125 psi unless otherwise shown, and shall have a flanged cover piece to provide access to the disc. Corrosive ferrous surfaces of valves, 4-inch and larger, which will be in contact with water, shall be epoxy-coated as specified in Subparagraph 215.01(e). Swing check valves shall be as manufactured by Crane, Mueller, Kennedy, or equal.

215.05 AIR-VACUUM AND AIR RELEASE VALVES

Air-vacuum and air release valves shall be of the size shown and shall have flanged or screwed ends to match piping. Bodies shall be of high-strength cast iron. The float, seat, and all moving parts shall be constructed of Type 18-8 stainless steel. Seat washers and gaskets shall be of a material insuring water tightness with a minimum of maintenance. Valves shall be designed for minimum 150 psi water-working pressure, unless otherwise shown.

215.06 BACKFLOW PREVENTER

The backflow preventer assembly shall be a complete unit consisting of two independently acting spring-loaded toggle lever check valves and four test cocks arranged so that a test of each check valve can be made. The spring loading of the check valves shall be sufficient to hold at least 1 psi in the direction of flow. The headloss across the entire unit shall not exceed 10 psi at the rated flow.

All internal parts of the toggle lever check valves must be removable or replaceable without removal of the backflow preventer assembly from the line. All materials shall be corrosion resistant and all ferrous surfaces in the water passages shall be epoxy coated as specified in Paragraph 215.02. Backflow preventers shall be Clayton Model D, or equal.

215.07 SOLENOID VALVES

Solenoid valves shall be designed for not less than 150 psi water-working pressure and shall be provided where shown.

215.08 UNDESIGNATED SMALL VALVES

All valves not designated on the drawings as to type shall be subject to approval of the Engineer.

- END OF SECTION -

SECTION 216 - TESTING AND DISINFECTING

216.01 GENERAL

(a) All testing of pipelines shall conform to the MAG Specification Section 610.14, Testing. All disinfecting of pipelines shall conform to the MAG Standard Specification Section 611, except as modified herein.

(b) Disinfection operations shall be scheduled by the Contractor as late as possible during the contract time period so as to assure the maximum degree of sterility of the facilities at the time the work is accepted by the Owner. Bacteriological testing shall be performed at the City of Glendale lab at no cost to the Contractor. Results of the bacteriological testing shall be satisfactory with the State Department of Health.

(c) Release of water from structures and pipelines, after testing and disinfecting have been completed, shall be as directed by the Engineer.

216.02 DISINFECTING PIPELINES

(a) CHLORINATION. A chlorine-water mixture shall be applied by means of a solution-feed chlorinating device. The chlorine solution shall be applied at one end of the piping or pipeline through a tap in such manner that as the pipeline is filled with water, the dosage applied to the water entering the pipe shall be approximately 50 ppm. Care shall be taken to prevent the strong chlorine solution in the line being treated from flowing back into the line supplying the water.

(b) RETENTION PERIOD. Chlorinated water shall be retained in the pipeline long enough to destroy all non-spore-forming bacteria. This period shall be at least 24 hours. After the chlorine-treated water has been retained for the required time, the chlorine residual at the pipe extremities and at other representative points shall be least 25 ppm.

(c) CHLORINATING VALVES. During the process of chlorinating the piping and pipelines, all valves and other appurtenances shall be operated while the pipeline is filled with the heavily-chlorinated water.

(d) FINAL FLUSHING. Following chlorination, all treated water shall be thoroughly flushed from the pipelines at their extremities. Should the initial treatment fail to produce satisfactory disinfection of the pipe and pipelines, as evidenced by the chlorine residual, the chlorination procedure shall be repeated at no additional cost to the Owner, until acceptable results are obtained.

216.03 CONNECTIONS TO EXISTING SYSTEM

Where connections are to be made to an existing potable water system, HTH shall be added at the points of connection as directed by the Engineer.

- END OF SECTION -

DIVISION 300 - MECHANICAL

SECTION 300 - MECHANICAL WORK, GENERAL

300.01 GENERAL

The provisions of Section 300 apply to all mechanical equipment except where otherwise specified or shown.

(a) The Contractor shall furnish and install all equipment complete with necessary appurtenances as specified and shown.

(b) Piping, fittings and valves shall be as specified in Sections 214 and 215.

(c) The Contractor shall furnish complete shop drawings of all mechanical equipment, together with appurtenant piping, valves, and controls for review in accordance with Section 130.

(d) Shop fabrication shall be performed in accordance with these specifications and as indicated on the approved shop drawings.

(e) Each item of equipment shipped shall have a legible identifying mark corresponding to the equipment number shown or specified for the particular item.

300.02 NOISE LEVEL

All equipment shall meet OSHA noise level requirements

300.03 VIBRATION LEVEL

All vibrating equipment shall be provided with restrained spring-type vibration isolators or pads per manufacturer's recommendation.

Type of Equipment	Load Classification
Pump:	
Reciprocating	Moderate Shock
Centrifugal or rotary	Uniform

300.04 COUPLINGS

Flexible couplings shall be provided between the driver and the driven equipment to accommodate angular misalignment, parallel misalignment, end float, and to cushion shock loads. Where required for vertical shafts, three piece spacer couplings shall be installed.

(a) The equipment manufacturer shall select or recommend the size and type of coupling required to suit each specific application; installation shall be per equipment manufacturer's recommendation.

(b) Taperlock bushings may be used for easy installation and removal on shafts of various diameters.

(c) Where universal type couplings are shown, they shall be of the needle bearing type construction equipped with commercial type grease fittings.

300.05 SHAFTING

(a) GENERAL. All shafting shall be continuous between bearings and sized to transmit the power required. Keyways shall be accurately cut in line. Shafting shall not be turned down at the ends to accommodate bearings or sprockets whose bore is less than the diameter of the shaft. All shafts shall rotate in the end bearings and shall be turned and polished, straight and true.

(b) MATERIALS. Shafting materials shall be appropriate for the type of service and torque transmitted. Environmental elements such as corrosive gases, moisture and fluids shall be taken into consideration. Materials shall be as shown or specified unless furnished as part of an equipment assembly.

(1) Low carbon cold-rolled steel shafting shall conform to ASTM A108, Grade 1018.

(2) Medium carbon cold-rolled shafting shall conform to ASTM A108, Grade 1045.

(3) Corrosion-resistant shafting shall be stainless steel, or Monel; whichever is most suitable for the intended service.

(c) DIFFERENTIAL SETTLEMENT. Where differential settlement between the driver and the driven equipment may be expected, a shaft of sufficient length with 2 sets of universal type couplings shall be installed.

300.06 BEARINGS

(a) GENERAL. Bearings shall conform with the standards of the Anti-Friction Bearings Manufacturing Association (AFBMA).

(b) To assure satisfactory bearing application, fitting practice, mounting, lubrication, sealing, static rating, housing strength and other important factors shall be considered in bearing selection.

(c) All re-lubricatable type bearings shall be equipped with a hydraulic grease fitting in an accessible location and shall have sufficient grease capacity in the bearing chamber.

(d) All lubricated-for-life bearings shall be factory-lubricated with manufacturer's recommended grease to insure maximum bearing life and best performance.

(e) BEARING LIFE. Except where otherwise specified or shown, all bearings shall have a minimum B-10 life expectancy of 5 years or 20,000 hours, whichever occurs first. Where so specified, bearings shall have a minimum rated B-10 life expectancy corresponding to the type of service, as follows:

Type of Service	Design Life (years) (whichever occurs first)	B-10 Design Life (hours)
(1) 8-hour shift	10	20,000
(2) 16-hour shift	10	40,000
(3) Continuous	10	60,000

(f) Bearing housings shall be of cast iron or steel and bearing mounting arrangement shall be as specified or shown, or as recommended by the manufacturer. Split-type housings may be used to facilitate installation, inspection and disassembly.

(g) Sleeve-type bearings shall have a babbit or bronze liner.

300.07 FLEXIBLE CONNECTORS

(a) GENERAL. Flexible connectors shall be installed in all piping connections to engines, blowers, compressors and other vibrating equipment, and in piping systems as shown. Flexible connectors shall serve to isolate vibrations, compensate for pipe misalignment, movement and offsets.

(b) CONSTRUCTION. Flexible connectors shall have interlocked links or annular corrugated bellows of reinforced rubber or stainless steel suitable for the specific process fluid, operating temperature and pressure.

(c) CONNECTIONS. Flexible connectors installed in 2-inch and smaller pipe shall have threaded connections. Sizes 2 1/2-inches and larger shall be flanged. Flexible hose or ducts for low pressures may be clamped by means of stainless steel clamps.

300.08 INSULATING CONNECTIONS

(a) GENERAL. Insulating bushings, unions, couplings or flanges, as appropriate, shall be used for joining pipes of dissimilar metals, and for piping systems where corrosion control and cathodic protection are involved.

(b) MATERIAL. Insulating connections shall be of nylon, teflon, polycarbonate, polyethylene or other non-conductive materials, and shall have ratings and properties to suit the service and loading conditions.

(c) INSTALLATION. All insulating connections shall be installed in accordance with manufacturer's instructions.

300.09 SUPPORTS, FOUNDATIONS AND PIPE HANGERS

(a) EQUIPMENT SUPPORTS. All equipment supports, anchors, and restrainers shall be adequately designed for static, dynamic and seismic loads. A seismic force of 0.25 of gravity shall be assumed for this purpose, unless otherwise required by local conditions.

(b) EQUIPMENT FOUNDATIONS. Equipment foundations shall be as per manufacturer's recommendations. All mechanical equipment, tanks, control cabinets, etc. shall be mounted on minimum 4-inch high concrete bases, as shown on standard structural details, unless otherwise called for. Foundation drawings shall be submitted for review by the Engineer in accordance with Section 130.

(c) PIPE HANGERS, SUPPORTS AND GUIDES

(1) All supports and parts thereof shall conform to the latest requirements of the ANSI Code for Power Piping B31.1 and MSS Standard Practice SP-58, except as supplemented or modified by the requirements of these Specifications.

(2) Pipe supports for plumbing systems shall be in accordance with the latest edition of the Uniform Plumbing Code or local administration requirements.

(3) Designs generally accepted as exemplifying good engineering practice, using stock or production parts, shall be utilized wherever possible.

(4) Pipe hangers shall be capable of supporting the pipe in all conditions of operation. They shall allow free expansion and contraction of the piping, and prevent excessive stress on equipment.

(5) Wherever possible, horizontal piping shall be secured with pipe clamps.

(6) Wherever possible, suspended pipes shall be attached to structural beams.

(7) All rigid hangers shall provide a means of vertical adjustment after erection.

(8) Where the piping system is subject to shock loads, such as seismic disturbances or thrusts imposed by the actuation of safety valves, hanger design shall include hydraulic shock suppressors, Grinnell Fig. 200, Basic Engineers Model BE4-10, or equal.

(9) Hanger rods shall be subject to tensile loading only. At hanger locations where lateral or axial movement is anticipated, suitable linkage shall be provided to permit such movement.

(10) Where horizontal pipe movement is greater than 1/2 inch, or where the hanger rod deflection from the vertical is greater than 4 degrees from the cold to the hot position of the pipe, the hanger rod and structural attachment shall be offset in such a manner that the rod is vertical in the hot position.

(11) Free-standing pipe connections to equipment, like chemical feeders, pumps, etc., shall be firmly attached to fabricated steel frames made of angles, channels, or I-beams anchored to the structure.

(12) Hangers shall be designed so that they cannot become disengaged by movements of the supported pipe.

(13) Hangers shall be spaced in accordance with Section 214.

(14) Where practical, risers shall be supported with riser lugs independent of the connected horizontal piping.

(15) Supports, guides, and anchors shall be so designed that excessive heat will not be transmitted to the structure.

(16) All submerged hangers, brackets, bolts, and supports shall be of stainless steel.

300.10 GASKETS AND PACKINGS

(a) Gaskets shall be 1/16 inch thick compressed white asbestos as manufactured by Garlock Style 900/7735 or 7006/7819, John Crane Style 181, or equal.

(b) Packing around shafts shall be of compressible material, compatible with the fluid being used. Chevron-type "V" packing shall be Garlock No. 432, John Crane "Everseal", or equal.

300.11 MACHINE FINISH

The type of finish shall be the most suitable for the application and shall be shown in micro-inches in accordance with "American Standard Surface Roughness, Waviness and Lay" (ANSI B46.1). The following finishes shall be used:

(a) Surface roughness not greater than 63 micro-inches shall be required for all surfaces in sliding contact.

(b) Surface roughness not greater than 250 micro-inches shall be required for surfaces in contact where a tight joint is not required.

(c) Rough finish not greater than 500 micro-inches shall be required for other machined surfaces.

(d) Contact surfaces of shafts and stems, which pass through stuffing boxes, and bearings, shall be finished to not greater than 32 micro-inches.

300.12 TOLERANCES

Tolerances and clearances shall be as shown on the shop drawings and shall be closely adhered to. Machine work shall in all cases be of high-grade workmanship and finish, with due consideration to the special nature or function of the parts. Members without milled ends and which are to be framed to other steel parts of the structure may have a variation in the detailed length of not greater than 1/16 of an inch for members 30 feet or less in length, and not greater than 1/8 of an inch for members over 30 feet in length.

300.13 WELDING

Unless otherwise shown and noted, all welding shall conform with the following:

(a) Latest revision of AWWA Standard D100 "Standard for Welded Steel Elevated Tanks, Standpipes, and Reservoirs for Water Storage."

(b) Latest revision of AWWA Standard C206 "Standard for Field Welding of Steel Water Pipe Joints."

(c) All composite fabricated steel assemblies which are to be erected or installed inside a hydraulic structure, including any fixed or movable structural components of mechanical equipment, where contact surfaces between individual assembly members are inaccessible after fabrication of the assembly has been completed, shall be seal welded to prevent entrance of air or moisture.

(d) Requirements of Section 209.03.

300.14 PROTECTIVE COATINGS

All equipment shall be painted or coated in accordance with Section 204, unless otherwise approved by the Engineer. Nonferrous metal and corrosion-resisting steel surfaces shall be coated with grease or lubricating oil. Coated surfaces shall be protected from abrasion or other damage during handling, testing, storing, assembly, and shipping.

300.15 PROTECTION OF EQUIPMENT

All equipment shall be boxed, crated, or otherwise protected from damage and moisture during shipment, handling, and storage. All equipment shall be protected from exposure to corrosive fumes and shall be kept thoroughly dry at all times. Pumps, motors, drives, electrical equipment, and other equipment having anti-friction or sleeve bearings shall be stored in weathertight storage facilities prior to installation. For extended storage periods, plastic equipment wrappers should be avoided, to prevent accumulation of condensate in gears and bearings.

300.16 NAMEPLATES

Equipment nameplates of stainless steel shall be engraved or stamped and fastened to the equipment in an accessible location with No. 4 or larger oval head stainless steel screws or drive pins. Nameplates shall contain manufacturer's name, model, size, characteristics and appropriate data describing the machine performance ratings.

300.17 TOOLS

The Contractor shall supply one complete set of special wrenches or other special tools necessary for the assembly, adjustment, and dismantling of the equipment. All wrenches and spanners shall be of best quality, hardened steel forgings with bright, finished heads and with work faces dressed to fit nuts. The set of tools shall be neatly mounted in a labeled tool box of suitable design provided with a hinged cover.

300.18 FLANGES AND PIPE THREADS

All flanges on equipment and appurtenances provided under this section shall conform to ANSI B16.1, Class 125; or B16.5, Class 150, unless otherwise shown. All pipe threads shall be in accordance with ANSI B2.1.

300.19 INSPECTION, START-UP, AND FIELD ADJUSTMENT

(a) The Contractor shall demonstrate that all equipment meets the specified performance requirements. Upon completion of installation of mechanical equipment and controls, an experienced, competent, and authorized representative of the manufacturer or supplier of each item of major equipment shall visit the site of work to perform the following tasks:

(1) To inspect, check, adjust if necessary, and approve the equipment installation.

(2) To start-up and field-test the equipment for proper operation, efficiency, and capacity.

(3) To perform necessary field adjustments during the test period until the equipment installation and operation are satisfactory to the Engineer.

(4) To instruct the Owner's personnel in the operation and maintenance of the equipment. Instruction shall include step-by-step trouble shooting procedures with all necessary test equipment.

(b) The costs of all work performed in this Subsection by factory-trained representatives shall be borne by the Contractor. The Owner will pay for costs of power and water. When available, the Owner's operating personnel will provide assistance in the field testing.

- END OF SECTION -

SECTION 301 - ELECTRIC MOTORS

301.01 GENERAL

(a) All electric motors shall conform with these specifications unless otherwise specified or shown. EXCEPTIONS: Motors for valve operators, submersible pumps or motors which are an integral part of Standard Manufactured Equipment, i.e., non-NEMA mounting, common shaft with driven element, part of domestic or commercial use apparatus. For further motor details, see individual equipment specifications.

(b) If water cooling is required for the thrust bearings, the submittal prints shall indicate this requirement. Cooling water lines shall be provided complete with solenoid valve, flow indicator, thermometer, throttling valve and, (where subject to freezing), insulation with heat tracing.

301.02 MANUFACTURER AND SUPPLIER

(a) Contractor shall have the equipment manufacturer select and supply suitable electric motors for his equipment. The choice of motor manufacturer shall be his responsibility, subject to favorable review by the Engineer. Such review will consider future availability of replacement parts and compatibility with driven equipment.

(b) Electric motors driving identical machines shall be identical.

(c) The motor horsepower shall be not less than the estimated minimum specified for each driven machine. The nominal horsepower shall be adequate for the driven machine without infringement upon the motor service factor.

(d) If the estimated minimum horsepower specified is not adequate to satisfy the foregoing restrictions or any other requirements of these specifications, the motor with next larger horsepower shall be supplied at no additional cost to the Owner. In addition, any changes caused by increase in motor horsepower shall be made by the Contractor at no additional cost to the Owner; such changes may involve circuit breakers, magnetic starters, motor feeder conductors and conduit sizes, etc.

301.03 DESIGN CHARACTERISTICS

(a) GENERAL. All electric motors shall comply with NEMA Standard MG-1.

(b) Electric motors shall be NEMA Design B, (except as noted in equipment specifications for motors controlled for variable speed operation and other special motors,) constant speed squirrel-cage induction motors having normal starting torque with low starting current. In no case shall starting torque or breakdown torque be less than the value specified in NEMA Standard MG-1. Motors shall be suitable for part-winding, star delta starting, or 2-speed winding, as shown on the electrical drawings.

301.04 MOTOR VOLTAGE

(a) Motors shall be rated in accordance with the following, unless otherwise specified. Motors with obsolete voltage rating will not be accepted.

(b) Motors below 1/2-horsepower shall be rated 115-volts, single phase, 60 Hertz. Dual voltage motors rated 115/230-volts, 115/208-volts, or 120-240 volts are acceptable.

(c) Motors 1/2 horsepower and larger shall be rated 230 volts, 460 volts, or 4160 volts, 3-phase, 60-Hertz, as required and as shown on the electrical drawings. Dual voltage motors rated 230/460 volts or 208/230/460 volts are acceptable.

301.05 MOTORS INSTALLED INDOORS

(a) All motors installed indoors shall be open drip-proof with a service factor of 1.15 minimum. EXCEPTION: All motors larger than 50 Hp locatd in damp environment such as in pump and pipe galleries, tunnels, chemical feed and sludge areas, shall have 2 cycles of solid baked epoxy vacuum impregnation.

301.06 EXPLOSION-PROOF MOTORS

(a) All motors installed in Class I, or Class II areas (exposed to flammable vapors, gases, or dust) shall be explosion-proof. Such motors shall carry Underwriters' approval with nameplate and serial number. The equipment manufacturer shall be responsible for advising the motor manufacturer of the correct NEC T-code required for the application.

301.07 INSULATION (HEAVY DUTY MOTORS)

(a) Where called out as heavy duty motors in individual equipment specifications, electric motors shall be furnished with Class B or F insulation, rated to operate at a maximum ambient temperature of 65°C and at the altitudes where the motors will be installed and operated.

301.08 BEARINGS

(a) GENERAL. Bearings shall conform with Paragraph 300.08, except as supplemented or modified by the requirements of this specification.

(b) BEARING LIFE (STANDARD DUTY MOTORS). Unless otherwise specified, all motors shall be suitable for standard duty with a minimum bearing life of 5 years or 20,000 hours (B-10 rating), whichever comes first.

(c) BEARING LIFE (HEAVY DUTY MOTORS). Where equipment is specified for heavy duty service, bearings shall be designed for a minimum rated B-10 life of 10 years or 40,000 hours, whichever comes first.

(d) Fractional horsepower through 2 horsepower motors shall be furnished with Lubricated-for-Life ball bearings.

(e) Motors larger than 2 horsepower shall be furnished with relubricatable ball bearings except vertical pump motors.

(f) Vertical pump motors larger than 2 horsepower shall be furnished with relubricatable ball, spherical, roller, or plate type thrust bearings.

Lubrication shall be per manufacturer's recommendation for smooth operation and long life of the bearings.

301.09 NAMEPLATES

(a) All motors shall be fitted with a permanent, non-corrosive nameplate stamped or engraved with NEMA Standard motor data, including bearing description and lubrication instructions. Insulation class, ambient temperature and altitude rating, if applicable, shall be included.

301.10 SHOP DRAWINGS

(a) Complete motor data shall be included in the submittal of driven machinery shop drawings. Motor manufacturer shall prepare motor data to include:

(1) Machine name and specification number of driven machine

(2) Motor manufacturer

(3) Motor type or model and dimension drawing

(4) Nominal horsepower

(5) NEMA design

(6) Frame size

(7) Enclosure

(8) Winding insulation class and treatment

(9) Rated ambient temperature

(10) Service factor

(11) Voltage, phase and frequency rating

(12) Full load current at rated horsepower for application voltage

(13) Starting code letter, or locked rotor KVA, or current

(14) Special winding configuration such as part-winding, star-delta

(15) Rated full load speed

NOTE: Driven machinery shop drawing submittal without the above information will not be acceptable for review by the Engineer.

(b) If electrical work is subcontracted, the Contractor shall supply the electrical subcontractor with the latest approved (by the Engineer) copy of

the motor data. This information shall be used in the selection and installation of overload protection devices, and for verification and setting of circuit trip elements.

301.11 INFORMATION TO MANUFACTURERS

(a) The Bidders shall furnish a copy of these electric motor specifications to all prospective suppliers of motors for their comprehensive use prior to opening of bid. Thereafter, the Contractor shall ensure that his equipment suppliers are provided with copies of this Section 301 for use in motor selections and in the preparation of shop drawings.

301.12 MANUFACTURER

(a) Motors shall be General Electric, Westinghouse, U.S. Motors, or equal.

- END OF SECTION -

302.01 GENERAL

The provisions of Paragraph 302.01 shall apply to all pumping equipment except where otherwise specified or shown. The Contractor shall assure that the pumps, drives, drive motors, speed control equipment (where variable speed drives are required) and accessories be furnished by a single pump manufacturer whom the Contractor shall require to assume responsibility for the satisfactory performance of the complete system.

(a) GENERAL REQUIREMENTS

(1) GENERAL. The provisions of Section 300 shall apply to all pumping equipment.

(2) PIPING AND VALVES. Piping, fittings and valves shall be as specified in Sections 214 and 215.

(3) PAINTING AND COATING. Painting and coating shall be as specified in Section 204.

(4) ELECTRIC MOTORS. Motors shall be as specified herein.

(5) ELECTRICAL WORK. Electrical work, power and motor control equipment, instrumentation and meters shall be as specified in Section 400.

(6) BOLTS. All anchor bolts, nuts and washers shall be hot-dip galvanized, unless otherwise specified in individual equipment specifications. Buried or submerged bolts, nuts and washers shall be of Type 18-8 stainless steel.

(7) NAMEPLATES. Each pump shall be equipped with a stainless steel nameplate indicating rated head and flow, impeller size, pump speed, and manufacturer's name and model number.

(8) PRESSURE GAGES. All pumps (except sample pumps, sump pumps and hot water circulating pumps) shall be equipped with pressure gages installed at pump suction and discharge lines. Pressure gages shall be located in a representative location in order to achieve true and accurate readings. Pressure gages shall be furnished in conformance with Section 214.

(9) STANDARDS. Pumping equipment shall conform to ANSI B58.1 and AWWA E101 standards.

(10) PERFORMANCE CURVES. In no case shall the required horsepower at any point on the performance curve exceed the rated horsepower of the motor. All centrifugal pumps shall have a continuously rising curve.

(11) SPARE PARTS. All pumps shall be furnished with a complete set of necessary spare parts, such as seals, packing, gaskets, nuts, bolts, wear rings, and any other parts subject to wear. One set of spare bearings shall be furnished with each pump.

(b) PUMP CONSTRUCTION

(1) FLANGES. Suction and discharge flanges shall conform to ANSI standard B16.1 or B16.5. dimensions.

(2) LUBRICATION. Vertical pump shafts shall be product water-lubricated, unless otherwise specified.

(3) CASTINGS. Cast iron pump casings and bowls shall be of close-grained gray cast iron, conforming to ASTM A48, or equal.

(4) BRONZE. Bronze pump impellers shall conform to ASTM B62.

(5) STAINLESS STEEL. Stainless steel pump shafts shall be of Type 400 Series. Miscellaneous stainless steel parts shall be of Type 300 or 400 series (exclusive of Type 316, which shall be used on special approval only).

(6) HANDHOLES. Handholes on pump casings shall be shaped to follow the contours of the casing to avoid any obstructions in the water passage.

(7) VORTEX SUPPRESSORS. Where necessary, vertical pumps shall be furnished with vortex suppressors.

(8) DRAINS. All gland seals, air valves, and cooling water drains, and drains from variable speed drive equipment shall be piped to the nearest floor sink, or drain, with galvanized steel pipe or copper tube, properly supported with brackets.

(9) LUBRICATION TUBE. For all vertical propeller, mixed flow and turbine pumps, other than deep well pumps, of bowl sizes 10-inch and larger, provide a stainless steel tube along column for grease lubrication of bottom bearing.

(c) SHOP DRAWINGS. Shop drawings of all pumps shall be submitted for review by the Engineer in accordance with Section 130. Shop drawings shall contain the following information.

(1) Pump name, identification number and specification number.

(2) Performance curve and pump data.

(3) The manufacturer shall indicate points on the H/Q curves, and the limits recommended for stable operation between which the pumps may be operated without surge, cavitation and vibration. The stable operating range shall be as wide as possible based on actual hydraulic and mechanical tests.

(4) Pump detailed description and specification.

(5) Electrical data including control and wiring diagrams.

(6) Assembly and installation drawings including shaft size, coupling, anchor bolt plan, part nomenclature, material list, outline dimensions and shipping weights.

(d) EQUIPMENT TESTING

(1) GENERAL. Tests shall be performed in accordance with the Test Code for Centrifugal Pumps of the Standards of the Hydraulic Institute, Inc. Tests shall be performed on the actual assembled unit from shut-off head condition to 25 percent above the required design capacity. Prototype model tests will not be acceptable.

(2) FACTORY TESTS. All pumps 10 to 125 horsepower (inclusive), shall be factory-tested in accordance with the above specifications. Certified test data in triplicate shall be submitted to the Engineer through the Resident Project Representative. Equipment shall not be shipped until the test data have been approved by the Engineer.

All pumps, 150 horsepower and larger, shall be factory-tested and witnessed by representatives of the Engineer. Test results in triplicate shall be submitted to the Engineer through the Resident Project Representative. Equipment shall not be shipped until the test data have been approved by the Engineer.

(3) FIELD TESTS. All pumps shall be field-tested after installation to demonstrate satisfactory operation without causing excessive noise, cavitation, vibration, and overheating of the bearings.

(4) MODIFICATIONS. In the event of failure of any pump to meet any of the above requirements or efficiencies, the Contractor shall make all necessary modifications, repairs, or replacements to conform with these specifications at no additional compensation.

(e) The services of a factory representative to check the pumps during and after installation, shall be furnished for each pump, 10-horsepower and larger, at no additional cost to the Owner.

302.02 DEEP WELL PUMPS (MOTOR DRIVEN)

(a) Pump Location - Well No. 8, City of Glendale

(1) GENERAL. The Contractor shall furnish and install an existing water well one vertical deep-well turbine pump with a submersible motor. The pump and motor assembly shall have a lifetime lubrication system or shall be product lubricated. The pump manufacturer shall accept unit responsibility for the pump/motor assembly.

(2) OPERATING CONDITIONS. The pump will be used for pumping clean, cool groundwater into the City of Glendale water distribution system. It shall be installed in a well fitted with an 18-inch I.D. casing. The pump performance curve shall continuously rise to the shut off head and the horsepower curve shall have a non-overloading characteristic. The

pump shall be suitable for continuous operation under a varying range of head conditions and shall meet all of the following operational and dimensional requirements:

- Pump capacity

  - 725 gpm ±75 gpm @ 770 ft TDH
  - 900 gpm (minimum) @ 690 ft TDH
  - 1050 gpm ±50 gpm @ 595 ft TDH

- Shut-off head

  - 1,150 ft maximum
  - 800 ft minimum

- Minimum bowl efficiency (exclusive of pump column friction and discharge head losses)

  - 79 percent @ 770 ft TDH
  - 81 percent @ 690 ft TDH
  - 80 percent @ 595 ft TDH

o	Length of pump column from bottom of pitless unit to top of bowl assembly	(ft)	560
o	Maximum outside diameter of bowls	(in)	13
o	Minimum column diameter	(in)	8
o	Minimum impeller shaft diameter	(in)	1-11/16
o	Diameter of discharge	(in)	8
o	Minimum motor horsepower	(hp)	175
o	Maximum motor horsepower	(hp)	200
o	Maximum motor speed	(rpm)	1800

(3) PUMP CONSTRUCTION

- PUMP ELEMENT. The impellers shall be the enclosed type, constructed of bronze. They shall be accurately fitted, smoothly finished, and dynamically balanced at normal pump speed and shall have removable bronze wearing rings mounted in their companion cases. The bowl cases shall be constructed of close-grained cast iron, free from blow holes, sand holes, or other detrimental defects. The bowl cases shall be lined with porcelain enamel for sizes 18-inch in diameter and smaller, or 3 coats of an epoxy resin having a total thickness of 25 mils for larger sizes. The exterior surfaces of the bowl units shall be coated with 8 mils of epoxy.

The epoxy shall meet the requirements of Section 215. The epoxy resin shall be applied in strict accordance with the manufacturer's printed recommendations.

- PUMP BEARINGS. Pump bearings shall be bronze and synthetic rubber combination type which shall be easily removable. The length of the pump bearings shall be at least 2-1/2 times the diameter of the shaft.

- PUMP SHAFT. The pump shaft shall be of Type 416 stainless steel.

- INTERCONNECTOR. The interconnector shall couple the bowl unit to the motor. The interconnector shall include a bronze sleeve bearing or bearings to isolate the motor from the pump, which shall be of sufficient design to protect the motor from radial loads. This sleeve bearing shall be protected from sand and grit by a sand cap or labyrinth-type sand slinger.

  The interconnector shall include a suction strainer which has a net open area at least four times the area of the eye of the impeller. The strainer shall be constructed of stainless steel.

- PUMP MOTOR COUPLING. The pump motor coupling shall be constructed of stainless steel, Type 410, and shall be capable of transmitting the total torque of the unit, regardless of the direction of rotation.

- BOLTS. All screws, bolts, and nuts shall be of Type ~~416~~ 316 stainless steel.

- COLUMN. The column pipe shall be constructed of 8-inch steel pipe, not lighter than Schedule 30. The column shall be threaded and coupled, and shall conform to American Standard tapered pipe thread specifications. The columns shall be furnished in single lengths of 20 feet.

- DISCHARGE HEAD. The discharge head shall be a pitless unit type allowing discharge below ground surface as shown on the drawings. The pitless case shall be steel of sufficient size to accomodate the 8-inch pump discharge column and the 18-5/8-inch O.D. well casing. The pitless case shall be welded to the well casing at the appropriate depth to achieve the bury depth of the discharge pipe shown on the drawings. The pitless case shall be epoxy coated in accordance with Section 215. All water passages inside the unit shall be constructed of corrosion resistant material or shall be epoxy coated in accordance with Section 215.

  The pitless unit shall contain neoprene O-rings or other similar material to provide a watertight seal between the spool surface and the interior surface of the unit. All O-ring seats shall be accurately machined and constructed of either hot-dipped galvanized steel or stainless steel. The unit shall contain some method of

seal protection to prevent damage to O-rings during installation and servicing.

The pitless unit shall be equipped with a watertight cap, designed to allow removal without disconnecting interior cables. Watertight cable and/or sealed electrical conduit conections shall be included with the cap. A depth test block shall also be included in the cap. The pitless cap shall not include a screened well vent at the top. Well venting will be achieved as shown on the drawings.

The discharge connection from the pitless unit to the discharge pipe shall be an 8-inch diameter flanged steel connection. All welded connections shall be watertight and shall be in accordance with Section 209.

The pitless unit shall be installed according to the selected manufacturer's recommendations. The pitless unit shall be a Monitor PS Unit, Model 6-PS-20-22-WBWEO8F8-S, manufactured by Baker-Monitor Division, Evansville, Wisconsin; a Maass-Baski MB Pitless Unit, Model MB, HD, S-20, 22, 8, F-8, WT-6, SWC, ATB, manufactured by Maass, Division of Surinak Engineering and Manufacturing, Inc., Muskego, Wisconsin; or approved equal.

(4) MOTOR AND CABLE

o WELL PUMP MOTOR. The pump motor shall be of the vertical, submersible, squirrel cage induction type, designed for continuous duty underwater operation, and rated 480-volt, 3-phase, 60-Hz, with normal torque and reduced voltage starting. The motor shall not be overloaded above name-plate rating at any point on the pump curve, and the motor horsepower shall be as specified.

The motor shall be furnished with Class B or F insulation, rated to operate at a maximum ambient water temperature of 86°F/30°C. The insulation shall protect the windings against the attack of moisture, acids, alkalies, abrasives, and shall permanently seal out all moisture. The insulation shall consist of, as a minimum, two cycles of solid baked epoxy vacuum impregnation. The motor shall be NEMA Design , and shall conform to the latest revision of NEMA Standard MG1, Section MG-1-20, and shall have a service factor of 1.15.

The motor shall be either an oil filled type or a water filled type. The oil-filled motor shall be equipped with a mercury seal located in the top of the motor where the shaft extends through the motor casing to prevent the entrance of water into the internal parts of the motor. The motor shall be filled with a high dielectric strength mineral oil and the oil shall be circulated throughout the motor for cooling the rotor, stator winding, and bearings. The motor shall contain a balance tube from the bottom of the motor into the motor shaft coupling compartment above the motor, which shall cause a hydrostatic balance between the water outside and the oil within the motor.

For a water filled motor, the motor shall be equipped with a non-exclusive stainless steel rotary shaft seal fitted outside the motor cavity to prevent the intrusion of abrasives or other water borne contaminants. The water shall be circulated throughout the motor for cooling the rotor, windings, and bearings. The motor shall contain a caged diaphragm of molded neoprene or other suitable method for balancing internal and external water pressures and for providing maximum mechanical seal life.

Either type of motor shall be equipped with two bronze sleeve bearings, one at each end of the rotor. The motor shall also be equipped with bearings capable of restraining upthrust and downthrust. The bearings shall be designed for a minimum B-10 service life of 60,000 hours.

The motor shall be compatible with the pump assembly. The motor shall be new and unused, furnished by a manufacturer with a principal operation and an established system of after market service in the United States.

- SUBMERSIBLE CABLE. The downhole motor power cable shall be size 300 MCM and shall comply with the National Electric Code and applicable local codes. The cable shall have three (3) conductors of not less than seven strands, with each conductor contained in an oil and water resistant insulating synthetic rubber or plastic jacket. The three conductors shall be enclosed in an outer synthetic rubber or plastic jaket, which shall also be impervious to water and oil. The cable shall be suitable for continuous immersion.

  The length of cable to be furnished shall be the sum of the total pump setting (to reach the motor terminal connection), plus one foot for each 50 feet of setting to compensate for twist or sag during installation, plus sufficient length of cable to reach the sealed electrical conduit connections at the pitless unit cap. The cable shall be protected with a steel guard the full length of the cable from the entrance to the motor housing to the top of the pump bowl assembly. The cable shall be banded to the midpoint of each pipe column section with stainless steel bands.

(5) ACCESSORIES

- AIR DEPTH TESTING. There shall be provided a suitable air line of 1/4-inch copper tubing of sufficient length to extend from the discharge head to the top of the bowl assembly. The air line shall be securely fastened with stainless steel straps to the column pipe and care shall be exercised in lowering the pump assembly so that the air line is not damaged. The air line shall connect to the depth test block contained in the pitless unit.

(6) TESTING AND DISINFECTION. Testing and disinfection of the well and equipment shall be performed as required in Sections 203 and 216.

(7) EXPERIENCE REQUIREMENT. A bidder, or the manufacturer whose equipment the bidder proposes to furnish, in order to qualify shall have been engaged in the manufacture of deep well turbine pumps for at least 10 years. The manufacturer of the submersible motor also shall have had at least 10 years experience in the manufacture of submersible motors having capacities at least as large as those required herein.

(8) MANUFACTURER.

Byron Jackson Pump Division, model 11MQHC - 12 Stage Submersible

Peerless Pumps, model 12LD-9 Stage, Curve No. 4805968

Worthington Pumps, model 12M-75, 12 Stage

302.03 HORIZONTAL BOOSTER PUMP

(a) PUMP NAME: Chlorination Booster Pump

(1) GENERAL

Number of pumps	- 1
Sample or pump number	- B-1
Location	- Chlorination Building at Well 8 site
Service	- Continuous
Operation (hrs/day)	- 24

(2) OPERATING CONDITIONS

Capacity (gpm)	- 8.8
Pump head (TDH-ft)	- 138
Liquid to be pumped	- Water
Specific gravity of liquid	- 1.0
Liquid temperature	- 50-80 degrees F
Max. pump speed (rpm)	- 3600
Min. motor size (hp)	- 1.0
Max. motor speed (rpm)	- 3600

(3) PUMP DIMENSIONS

Min. size of suction connection (in.)	- 1.0 NPT
Min size of discharge connection (in.)	- 1.0 NPT

(4) PUMP CONSTRUCTION

Motor bracket and discharge body	- Cast iron
Casing	- Stainless steel
Impeller	- Thermoplastic or glass filled delrin

Bearings	- Water lubricated
Shaft coupling	- Stainless steel
Seal	- Mechanical seal
Pump base	- Cast iron or fabricated steel with drain
Mounting method	- Base-mounted

(5) DRIVER

Direct drive with horizontal, ODP electric motor suitable for 480-volt, 3-phase, 60 Hertz supply, in accordance with Section 301.

(6) MANUFACTURER

Jacuzzi, model 1H4B18T
Webtrol, model H10B8-3PH

- END OF SECTION -

SECTION 303 - CHLORINATION EQUIPMENT

303.01 GENERAL

(a) The Contractor shall furnish and install the following chlorination equipment, with all necessary controls, valves, piping and accessories, to provide a complete and workable system:

QUANTITY	EQUIPMENT
2	vacuum regulators with an automatic changeover system
1	chlorine gas ejector
1	chlorine solution diffusers
•	Required piping, fittings, valves and necessary accessories to complete the system as shown and specified.

(b) The Contractor shall furnish the services of an authorized factory representative of the chlorination equipment manufacturer to advise on installation and start-up of all the equipment, to make any necessary adjustments, and to instruct operating personnel in maintenance and operation. Said services shall be furnished at no additional cost to the Owner.

(c) All equipment shall be of rugged construction with all components designed for long and continuous operation in a corrosive (chlorine) atmosphere. Unless otherwise specified, all equipment and components of the chlorination system shall be as recommended by the Chlorine Institute, Inc.

303.02 VACUUM REGULATORS

(a)
- Point of chlorination : Well 8 discharge line to system
- Dosage control : Manual
- Feed range : 1.25 to 25 lb/day
- Mounting : Directly to 150 lb cylinders

(b) The vacuum regulators shall be equipped with automatic flow, proportional control, with a capacity range of 20:1, and manual dosage control. The vacuum regulators shall contain inside their cases all working parts like gas pressure and vacuum regulating valves, pressure-vacuum relief valve, meter for dosage rate, and panel front variable orifice control for manual dosage rate adjustment.

(c) Each vacuum regulator shall be designed so that the chlorine gas shall be continuously fed under less than atmospheric pressure from the time that it passes the inlet valve until it is absorbed in water at the ejector. If the water supply to the ejector should fail, or if the vacuum should fail to be maintained, for any reason whatsoever, the chlorine pressure reducing valve in the chlorinator shall close automatically. Provisions shall be made

for limiting the vacuum with the vacuum regulator in order to prevent back siphoning of water into the metering equipment. Means shall be provided for venting the equipment to the outside air to carry off excess chlorine due to leakage of valves or other causes. Surfaces of all parts which may at any time come in contact with chlorine gas in the presence of moisture shall be constructed of materials which are resistant to moist chlorine. The vacuum regulator case shall be constructed of fiber glass or similar chlorine corrosion-resistant material.

(d) Provisions for an automatic changeover system shall be supplied with the vacuum regulators. An indicator shall provide a visual signal when the chlorine gas supply is exhausted or interrupted. Each vacuum regulator shall have an indicator to show whether it is in "Reserve", "Operating" or "Empty" condition.

(e) MANUFACTURER. Capitol Controls, model 201Cl; Fischer and Porter, series 70Cl710; or equal.

303.03 CHLORINE EJECTORS

(a) GENERAL. The Contractor shall furnish and install one (1) chlorine ejector as shown. The ejectors shall be suitable for the capacities and pressure conditions listed herein.

(b) CONSTRUCTION. The ejectors shall be provided with threaded or flanged connections, manual throat adjustment and diaphragm shut-off. Each ejector shall be equipped with a vacuum gage. Manufacturer: Capitol Controls, Fischer and Porter, or equal.

(c) EJECTOR SCHEDULE

Point of application : Well 8 distribution main
Ejector size - inches : 1.0
Feed rate - lbs/day : 1.25 to 25 lbs/day
Dilution water - gpm : 8.5
Water pressure - psig : 120 (max.)
Back pressure - psig : 125 (max.)
Length of vapor line - ft : 8
Length of solution line - ft : 15

303.04 CHLORINE DIFFUSERS

The Contractor shall furnish and install one (1) chlorine diffuser as detailed and where shown to feed chlorine solution into the water stream. All diffusers shall be well supported with corrosion resistant supports and they shall be installed for easy removal and disconnection.

303.05 VALVES, METERS, ADAPTERS, GAS AND SOLUTION PIPING

(a) The Contractor shall furnish all chlorine gas and chlorine solution piping, valves, gas pressure gages, pressure switches and pressure regulators, strainers, expansion tanks, flexible tubing, adapters, steel and

PVC pipe and fittings required for the entire installation as shown. All pressure gages mounted on either chlorine gas or chlorine solution lines shall be protected with diaphragm seals.

(b) Steel pipe and fittings used for chlorine pressure lines, and PVC pipe and pipe fittings used for chlorine gas under vacuum, and chlorine solution shall be as specified in Section 215. All flanges and unions on chlorine pressure piping shall be ammonia type, suitable for that service. Threaded joints shall be made up with compounds especially recommended for chlorine service.

(c) The following items shall be furnished and installed as part of the chlorination equipment:

1 Set of installation drawings showing equipment configuration, isometric piping, wiring and special details.

303.05 EXTRA PARTS AND ACCESSORIES

In addition to the valves, flexible connections, etc. shown, the Contractor shall furnish the following extra parts, all of which shall meet the requirements of these specifications:

Item No.	Description	Quantity
1	3/8-inch flexible tank connections, each with two cylinder and header valves.	2
2	Chlorine gas pressure inlet and needle valve seats	2
3	3/4-inch chlorine gas shut-off line valves	2
4	Complete set of special gaskets	2 sets
5	Instruction books	3
6	Spare flowmeters for all chlorinators	1 set

303.06 ALUMINUM HOUSING

The chlorination facilitlies for this project shall be enclosed in an aluminum utility building, mounted on a 6-inch thick reinforced concrete pad, as shown on the drawings. The building shall have dimensions 4 feet by 6 feet by 7 feet high. The building shall be constructed of all extruded aluminum framing and Reynolds Aluminum Tuf-Rainlock siding, and shall have a raintight roof. The building shall come equipped with a foam sealed insulation and a roller guide door with a hasp for locking. The building shall have a natural mill finish. The building shall be as manufactured by United Aluminum, Phoenix, Arizona; or equal.

303.07 BOOSTER PUMP

The horizontal booster pump shall meet the requirements of specification sections 301 and 302.

- END OF SECTION -

SECTION 312 - FLOW METERS

312.01 GENERAL

(a) The Contractor shall furnish and install all meters specified and shown. For painting and coating see Section 204. For instrumentation see Section 400.

(b) EQUIPMENT DESIGNATION. In these specifications and on the drawings, meters are represented schematically and by assigned identification numbers for reference and location purposes. Meter numbers specified herein and on the drawings shall be employed exclusively throughout shop drawings, data sheets, and other related documents. Accuracy of flow metering equipment shall be as specified for each element type.

(c) INSTALLATION AND TEST. The Contractor shall assemble and install all equipment in strict accordance with the manufacturer's instructions under the supervision of the manufacturer's representative, under the general review of the Engineer. All installations shall be accomplished by competent craftsmen in a workmanlike manner. Equipment shall be prepared for operational use in accordance with manufacturer's instructions, including bench test and calibration, where required. Each item shall be subjected to an operating test over the total range of capability of the equipment. Where applicable, tests shall be conducted in accordance with the Test Code of the Standards of the Hydraulic Institute. The Contractor shall be furnished copies of factory test certifications and shall notify the Engineer one week in advance of all tests to be conducted on site. Final acceptance of the equipment is contingent on satisfactory operation after installation.

(d) SPARE PARTS. The Contractor shall provide a list of manufacturer's recommended spare parts and after the Engineer's approval, shall furnish all spare parts suitably packaged and labeled.

(e) SPECIAL TOOLS. A list of special tools required shall be submitted to the Engineer for approval. The tools shall be suitably wrapped and identified for application. Special tools shall include substitute steel spools for each meter for maintenance purposes. Each spool shall be labeled to identify the meter for which temporary replacement is required. The label shall include the meter identification number, size and service.

(f) SHOP DRAWINGS. Submit complete shop drawings of all meters for review in accordance with Section 130.

312.02 IN-LINE PROPELLER METERS (M-1, M-2)

(a) GENERAL. The Contractor shall furnish and install all in-line propeller meters where shown and as called out below. The meters shall be suitable for operation with water at process temperatures. Each propeller meter shall register flow to a guaranteed accuracy of ± 2 percent, throughout the range specified.

(b) CONSTRUCTION. The propeller meters shall have steel or cast iron meter tubes with plastic or stainless steel liners, stainless steel straightening vanes, and flanged or grooved ends, suitable for a minimum working pressure of 150 psi. Each meter shall feature a 4-pole magnetic type drive which will prevent the process fluid from contacting any gears, bearings, shafts, etc., within the meter. The rotation of the propeller shall be transmitted from the magnetic drive to the register and transmitter by means of a flexible or rigid connecting shaft. The propeller shall be of 3-bladed conical design, constructed of rigid plastic that will not flex or otherwise change in dimension under maximum flow conditions through the meter. Each meter shall be furnished with a 6-digit, direct-reading totalizer, registering in gallons and a local flow rate indicator. In addition, unit M-1 shall include an integral transmitter.

(c) INSTRUMENTATION. Those meters requiring remote indication, recording, or control shall be equipped with a transmitter which shall be of the optical pulse-rate generator type. The pulse frequency signal of 0-20 pulses per second shall be proportional to a flow from zero to maximum flow as shown. These pulse rate output signals shall be utilized by telemetry equipment furnished by the owner as required in Section 400 of these specifications.

(d) MANUFACTURER

Sparling Division of Envirotech Corp., model FM 112,
McCrometer, model MC0500-150,
or equal.

(e) SCHEDULE OF IN-LINE PROPELLER METERS

Ident. No.	Service	Size Inches	Flow Range GPM	Pressure Rating PSI	Ends
M-1	Water	8	0-1500	150	Flanged
M-2	Water	8	0-1500	150	Flanged

- END OF SECTION -

DIVISION 400 - ELECTRICAL WORK

400.01 GENERAL

(a) This Section of the Specification describes the material, management, and methods to be utilized by the Contractor for the installation of the work and systems described in other Sections.

(b) The work includes the work of this Division as well as the connection of equipment furnished under Divisions not specifically mentioned herein. The work includes all appurtenances required for a complete facility ready for service.

400.02 CODES AND STANDARDS

(a) All equipment and materials shall conform to the latest revision of the following standards:

(1) American National Standards Institute (ANSI).

(2) Institute of Electrical and Electronic Engineers (IEEE).

(3) National Electrical Manufacturers Association (NEMA).

(4) Underwriter's Laboratories (UL).

(5) Insulated Power Cable Engineers Association (IPCEA).

(6) American Society for Testing and Materials (ASTM).

(b) All electrical equipment and materials, and the design, construction, and installation thereof, shall comply with all applicable provisions of the OSHA Safety and Health Standards (29CFR1910 and 29CFR1926, as applicable), State Building Standards, and applicable local codes and regulations.

(c) Where the Contract Documents require a higher degree of workmanship or better quality of material than implied by the above codes and standards, then the Contract Documents shall prevail.

400.03 WORKING DRAWINGS

(a) The electrical Drawings constitute an integral part of this Contract and serve as the working drawings. They indicate general arrangements and locations.

(b) All items not specifically shown on the Drawings, but obviously required to obtain a workable installation, shall be included.

400.04 RECORD DRAWINGS

(a) In addition to the record drawing requirements specified in Section 130, the Contractor shall show depths and routing of all concealed below-grade electrical installations. This set of record drawings shall be available to the Engineer during construction.

400.05 EQUIPMENT, MATERIALS, AND WORKMANSHIP

(a) It is the intent of the Contract Documents to establish quality standards for all equipment and materials and to require first-class workmanship in order to facilitate trouble-free operation and minimum maintenance of the project.

(b) All equipment and materials furnished by the Contractor shall be new, shall be listed by UL, and shall bear the UL label, where UL requirements apply. All equipment and materials shall be products of reputable, experienced manufacturers. Similar items in the project shall be the products of the same manufacturer. All equipment and materials shall be of industrial grade and standard of construction, shall be of sturdy design and manufacture, and shall be capable of long, reliable, trouble-free service.

(c) All work, including installation, connection, calibration, testing, and adjustment, shall be accomplished by qualified, experienced personnel working under continuous, competent supervision. The final completed installation shall display superior work, employing industrial standards and methods.

400.06 TESTING

(a) The Contractor shall perform on-site tests, in the presence of the Engineer, to demonstrate compliance with the requirements of this Specification; submittal procedure shall be as required for shop drawings. Such testing shall include:

(1) Testing for ground resistance value specified under Grounding.

(2) Insulation resistance tests as specified under Wire and Cable.

(3) Operational testing of all equipment furnished and/or connected in performance of this contract.

400.07 SHOP DRAWINGS AND CATALOG DATA

(a) All submittals required by this Section shall be made in accordance with the General Conditions.

(b) Within 35 days after execution of the contract, the Contractor shall submit complete material lists for the work of this Section. Such lists shall state manufacturer and brand name of each class of material.

(c) Shop drawings are required for material and equipment which are listed in the appropriate sections. Shop drawings shall provide sufficient information to evaluate the suitability of the proposed material for the intended use and for compliance with this Specification; data shall include:

(1) Front, side, rear elevations and top views.

(2) Location of conduit entrances and access plates.

(3) Component data.

(4) Connection diagrams, terminal diagrams, internal wiring diagrams, conductor size, etc.

(5) Method of anchoring, weight.

(6) Finish.

(7) Nameplate.

(d) Catalog data shall be submitted to supplement the shop drawings. Catalog cuts, bulletins, brochures or the like, or photocopies of applicable pages thereof, or shop drawings, shall be submitted for mass produced, non-custom manufactured material. These catalog data sheets shall be stamped to indicate the project name, applicable Specification Section and Paragraph, and the model number and options shall be marked in space designated for such data in the stamp.

400.08 AREA DESIGNATIONS

(a) GENERAL PURPOSE LOCATIONS. For purposes of delineating electrical enclosure and electrical installation requirements of this project, certain areas have been classified in the Contract Documents as defined below. Electrical installations within these areas shall conform to the referenced code requirements for the area involved. Electrical work installed in areas which are not specifically classified shall be "General Purpose"; workmanship and enclosures shall comply with the general requirements of this Specification.

(b) WET LOCATIONS. All locations exposed to weather, are classified as wet locations. In this area classification, raceway shall be rigid steel conduit; entrances shall be threaded; fittings shall have gasketed covers; and covers shall be vertical or preferably horizontal at a low point to drain the fitting or conduit system. Threaded fastening hardware shall be stainless steel; mounting brackets galvanized. Attachments or assembly by welding must be galvanized after fabrication. Instruments and control cabinets, panels, switchboards and motor control centers located outdoors shall be "Weatherproof." Enclosures shall be mounted with a 1/4-inch air space from walls unless otherwise specifically noted on the drawings.

(c) CORROSIVE LOCATIONS. The Interior of the Chlorination Housing is classified as a corrosive location. In this location threaded hardware shall be stainless steel, all other hardware, fittings, and raceway shall be PVC coated. Enclosures shall be non-metallic with corrosion resistant hardware.

400.09 UTILITY SERVICE FACILITIES

(a) Electric service to the work of this contract will be from a motor control center provided by others. The Contractor shall make connections to the load terminals of a switch and fuse unit provided in the motor control center 480V, 3 phase power for the well pump and shall install circuit breakers in the motor control center lighting panel for 120/240V, 1 phase power. Contractor shall provide fuses for the well pump circuit as indicated.

(b) Public telephone service for the telemetry equipment will be from existing TELCO installations. Facilities provided for telephone service will be shall comply with the requirements of the utility. The contractor shall install conductor from the Telemetry Cabinet to the TELCO terminal strip as required by TELCO. The contractor shall assist the City in ordering telephone circuits to meet project requirements.

400.10 GROUNDING

(a) Ground continuity throughout the facility shall be maintained by installing an electrically continuous metallic raceway system or a non-metallic raceway with a grounding conductor, when non-metallic raceway is permitted in this Specification. Metallic raceway shall be installed with double lock nuts or hubs at enclosures; non-metallic raceway containing d-c conductors operating at more than 50-volts to ground and any a-c conductors shall contain a copper grounding conductor either bare, or green if insulated; such conductor shall be bonded to terminal and intermediate metallic enclosures. Ground conductors and metallic raceway shall be terminated and bonded to the motor control center ground bus.

(b) Grounding cable shall be copper and sized in accordance with Code requirements, when not sized on the Drawings.

(c) Insulated grounding bushings shall be employed for all grounding connections to steel conduits in switchboards, in motor control centers, in pullboxes and elsewhere where conduits do not terminate at a hub or a sheet metal enclosure.

(d) Where insulated bushings are required, they shall be installed in addition to double lock-nuts.

400.11 EQUIPMENT ANCHORING

(a) Freestanding or wall-hung equipment shall be anchored in place by methods that will resist 20 percent lateral force.

Anchoring methods and leveling criteria recommended by equipment manufacturers are a part of the work of this Contract; such recommendations shall be submitted as required for shop drawings.

400.12 HOUSEKEEPING PADS

(a) Concrete housekeeping pads are required for all floor-standing electrical equipment. Housekeeping pads shall be 2 inches above surrounding finished floor or grade unless otherwise shown and shall be 2 inches larger in both dimensions than the supported equipment unless otherwise shown.

400.13 CONDUCTOR AND EQUIPMENT IDENTIFICATION

(a) Completed electrical installation shall be provided with adequate identification to facilitate the proper control of circuits and equipment and to reduce maintenance effort.

(b) The Contractor shall assign to each control and instrumentation wire a unique identification number. This number shall be assigned to all conductors having common terminals and shall be shown on all shop drawings. These numbers shall appear within 3 inches of conductor terminals. "Control" shall be defined as any conductor used for alarm, annunciator, or signal purposes, or connect switch or relay contacts, or relay coils.

(1) The method of identification shall be either imprinted plastic coated cloth by Brady; or Thomas & Betts; imprinted heat shrink tubing or imprinted split-sleeve markers cemented in place; or equal.

(c) All 120/240-volt system feeder cables and branch circuit conductors shall be color coded black, Phase A; red, Phase B; blue, Phase C and white, neutral. 480 volt system conductors shall be color coded brown, Phase A; orange, Phase B; yellow, Phase C. Color coding tape shall be used where colored insulation is not available. Branch circuit switch shall be yellow. Insulated ground wire shall be green. Color coding and phasing shall be consistent throughout the site, but bars at panelboards, switchboards, and motor control centers shall be connected Phase A-B-C, top to bottom, or left to right facing connecting lugs.

(d) General purpose a-c control conductors shall be pink. General purpose d-c control conductors shall be blue.

(e) All spare conductors shall be terminated on terminal screws and shall be identified with a unique number as well as with destination.

(f) Nameplates shall be provided for all panelboards, panels, starters, switches, pushbutton stations, etc. In addition to the nameplates shown on the Drawings, control devices shall be equipped with standard collar type legend plates, as required.

(g) Control devices within enclosures shall be identified in accordance wtih the Drawings; identification shall be embossed plastic tape.

(h) Terminal strips shall be identified by imprinted, varnished, marker strips, attached under the terminal strip.

(i) Toggle switches which control loads out of sight of switch and multi-switch locations of more than 2 switches shall have suitable enscribed finish plates.

(j) Empty conduits shall be tagged at both ends to indicate destination at far end. When it is not possible to tag conduit, destination shall be identified by marking adjacent surface.

400.14 FINISH

(a) General purpose enclosures and other than general purpose enclosures which are smaller in volume than 500 cubic inches shall be finished in accordance with the manufacturer's standard procedures; finish color shall be ANSI 61.

(b) NEMA 3, 4, and 12 enclosures larger in volume than 500 cubic inches shall be finished according to Paint Section of these Specifications.

400.15 UNDERGROUND RACEWAY

(a) Underground raceway shall be thinwall for concrete encasement. Raceway shall be run on a grade line of at least 4 inches per 100 feet sloping towards pullboxes. Duct shall be installed and pullbox depths adjusted so that the top of the concrete envelope is a minimum of 18 inches below grade. Changes in direction of duct envelope shall be accomplished with long sweep bends of minimum radius of 24 times duct diameter where the change exceeds 10° horizontally or vertically. Bottom of trench shall be as stated elsewhere in these Specifications; top surface of envelope shall be colored with iron oxide in the proportion of one pound of oxide per sack of concrete. Raceway shall be cleaned by drawing through it a standard flexible mandrel one foot long and 1/4-inch less than the trade size of the duct through which the mandrel will be drawn. After passing of the mandrel, a wire brush and swab shall be drawn through. Raceway, in duct envelope, which does not require conductors, shall have a 1/8-inch polypropylene pull cord.

(b) Pullboxes shall be of precast concrete; concrete construction shall be for traffic loading, covers shall be traffic type. Covers shall be identified as "Electric". Pullboxes shall be equipped with pulling-in irons opposite and below each ductway entrance. All covers and lids shall be bolted to cast-in-place steel frames with corrosion resistant hardware. Frames shall be factory-primed; covers shall be galvanized and shall have lifting handles.

(c) Duct entrances shall be grouted smooth, duct shall be terminated with flush end bells. Sections of pre-fabricated pullboxes shall be assembled with waterproof mastic and shall be set on a 6-inch bed of gravel as recommended by the manufacturer.

(d) Pullboxes shall be by Brooks; Quikset; or equal.

400.16 RACEWAY

(a) MATERIAL. Raceway shall be rigid steel conduit, unless indicated otherwise. Rigid steel conduit shall be full weight, mild steel, hot-dip galvanized and bichromate coated inside and outside after galvanizing. All steel conduit installed in direct contact with earth and in concrete slabs on grade shall be corrosion protected. Corrosion protected conduit shall be left exposed until inspected and approved by the Engineer. Intermediate steel conduit (IMC) or equivalent quality may be used in place of rigid steel conduit.

Flexible metallic conduit shall be fabricated from galvanized interlocked steel strip. Liquid-tight flexible metallic conduit shall have an extruded polyvinylchloride covering of the flexible steel conduit.

Raceway which is required to be corrosion protected shall have a polyvinylchloride jacket. Polyvinylchloride jacketed conduit shall be Underwriters' Laboratories listed and all conduit, prior to coating, shall conform to Federal Specification WW-C-581d, ANSI rigid steel conduit specification C80.1-1959, and to Underwriters' Laboratories specifications. The zinc surfaces of the conduit shall remain intact and undisturbed on both the inside and the outside of the conduit through the preparation and application processing. A PVC coating shall be bonded to the galvanized outer surface of the conduit. The bond between the PVC coating and the conduit surface shall be greater than the tensile strength of the plastic. The thickness of the PVC coating shall be a minimum of 0.04 inch (40 mils). A PVC jacketed coupling shall be furnished with each length of conduit. a PVC sleeve equal to the O.D. of conduit shall extend 1-1/2 inches from each end of coupling.

(b) INSTALLATION

(1) Raceway shall be installed in the locations shown on the Drawings with due regard to field conditions and the work of other trades. Raceway system shall be electrically and mechanically complete before conductors are installed. Bends and offsets shall be smooth symmetrical and shall be accomplished with tools designed for the purpose intended. Factory elbows shall be used for all 3/4-inch conduit; bends in larger sizes of metallic conduit shall be accomplished by field bends or factory elbows.

(2) Empty conduits that are not terminated in pullboxes shall be plugged. Exposed raceway shall be installed perpendicular or parallel to building lines. Conduit shall be supported by 2-hole straps where concealed and one-hole cast clamps elsewhere at intervals specified by the National Electric Code. Conduit shall be terminated with flush couplings at exposed concrete surfaces. Conduit stubbed up for floor-standing equipment shall be placed in strict accordance with approved shop drawings. Metallic raceway installed below-grade or in wet locations and in concrete shall be made up with a conductive waterproof compound applied to threaded joints. Note: An acceptable compound is Zinc Clads Primer Coatings No. B69A45; HTL-4 by Crouse-Hinds; Kopr Shield by Thomas & Betts; or equal.

(3) Conduit may be cast integral with horizontal and vertical concrete slabs providing one-inch clearance is maintained between conduit surface and/or concrete surface. If this clearance cannot be maintained, raceway shall be installed exposed below elevated slabs; if slabs are on grade, it shall be thickened to provide three inches of concrete cover below the structural slab.

Where a run of concealed PVC conduit becomes exposed, a transition to rigid steel conduit is required. Such transition shall be accomplished with a factory elbow or a minimum 3-foot length of rigid steel conduit both terminating at the exposed concrete surface with a flush coupling. Non-metallic runs piercing concrete walls shall be accomplished with a short steel nipple terminating with flush couplings.

(4) Flexible conduit shall be used at dry locations for the connection of equipment such as motors, instruments, valves, pressure switches, subject to vibration or movement during normal operation or servicing. Flexible conduit may be used in lengths not exceeding 18 inches.

In locations other than dry, such connections shall be made using flexible liquid-tight conduit. Equipment subject to vibration or movement which is normally provided with wiring leads, such as solenoid valves, shall be installed with a cast junction box for the make-up of connections. Flex conduits shall be as manufactured by American Brass; Anaconda; Electroflex; or equal.

400.17 WIRE AND CABLE

(a) MATERIAL

(1) Conductors, including ground conductors, shall be copper. Insulation shall bear manufacturer's trademark, type and voltage rating, and conductor size. Wire and cable shall be a product of Anaconda; General Cable; General Electric; Okonite; Triangle; or equal. Cable assembly and cable testing shall comply with applicable requirements of IPCEA Publication No. S-61-402, and other relevant IPCEA publications.

(2) Control wire shall be stranded, coated copper machine tool grade UL, Type MTW. Conductors No. 14 and larger shall have 3/64-thick insulation. Wire shall be rated at 600 volts at 60°C in wet locations.

(3) Building wire conductors No. 4 and larger installed below grade or in concrete slabs on grade shall have type RHW-USE insulation, 600-volt; all other conductors No. 4 and larger shall have THWN insulation, 600-volt. All other building wire shall be 600-volt, type THW. Building wire No. 8 and larger shall be stranded; size 10 and smaller shall be solid.

(1) Conductors shall not be pulled into raceway until:

(aa) Raceway system has been inspected and approved by the Construction Engineer.

(bb) Plastering and concrete have been completed in affected areas.

(cc) Raceway system has been freed of moisture and debris.

(2) Conductors No. 1 and smaller shall be hand pulled; larger conductor may be installed using power winches. Wire pulling lubricant, where needed, shall be UL approved. Wire in panels, cabinets, and gutters shall be neatly grouped, using nylon tie straps, and fanned out to terminals.

400.18 SPLICES AND TERMINATIONS

(a) Control conductors shall be spliced or terminated only at the locations indicated on the Drawings and only on terminal strips or terminal lugs of vendor furnished equipment. For the purposes of this portion of the Specifications, "control conductors" are defined as conductors operating at 120-volts or less in circuits that indicate equipment status or that control the electric energy delivered to a power consuming device.

(b) All 120/240-volt and 480-volt branch circuit conductors may be spliced in suitable fittings at locations determined by the Contractor.

(c) 600-volt branch circuit conductors, No. 8 and larger, shall be spliced or terminated with compression connectors similar to Burndy "HI lug" or Thomas & Betts "Shure Stake", or equal; these splices shall be insulated with 2 layers of Scotch tape or equivalent by Plymouth, or equal. Conductors smaller than No. 8 may be spliced with pre-insulated spring connectors, 3M "Scotch-lok" or Ideal Wing Nuts, or equal. Conductors of these types may be terminated on termination lugs or screws normally furnished with vendor-furnished equipment.

(d) Control conductors shall be terminated under terminal screws with pre-insulated fork tongue lugs, Thomas & Betts RC Series; Burndy; or equal.

(e) Control devices, such as solenoid operated valves, that are normally supplied with conductor pigtails, shall be terminated as described for control conductors.

(f) Splices in 600-volt wire and cable which are not pre-insulated shall be taped with 2 layers, each layer half-lapped, of Scotch No. 33 tape; Plymouth Slipknot or equal. Splices of 600-volt conductors in concrete pullboxes shall be watertight using epoxy resin splicing kits similar and equal to 3M Scotchcoat, 82 series; or Burndy HySeal epoxy kits; or equal.

(g) Splices to motor leads in motor terminal boxes shall be taped with varnished cambric tape. This shall be overtaped with a high temperature vinly tape, by Plymouth, or equal.

400.19 CONDUIT FITTINGS

(a) Fittings shall comply with the same requirements as the raceway with which they will be used. Fittings having a volume less than 100 cubic inches for use with rigid steel conduit shall be cast or malleable of non-ferrous metal. Such fittings, larger than one inch, shall be "mogul size". Fittings or boxes larger than 100 cubic inches may be fabricated from galvanized sheet metal. Covers of fittings not in "dry" locations shall be closed with gaskets. Surface mounted cast fittings, housing wiring devices in outdoor and damp locations, shall have mounting lugs.

(b) Insulated bushings shall be molded plastic or malleable iron with insulating ring, shall be O-Z Type A and B, or equivalent types by Thomas & Betts; Steel City; Appleton: efcor; Gedney; or equal.

(c) Insulated grounding bushings shall be malleable iron with insulating ring and with ground lug, similar and equal to O-Z Type BL, or equivalent types by T & B; Steel City; Efcor; Gedney; or equal.

(d) Erickson couplings shall be used at all points of union between ends of rigid steel conduits which cannot be coupled; running threads and threadless couplings shall not be used. These shall be Appleton Type EC, 3-piece couplings, or equivalent types by T & B; Steel City; Efcor; Gedney; or equal.

(e) Liquid-tight fittings shall be Appleton Type ST, or equivalent types by Crouse-Hinds; T & B; Efcor; Gedney; or equal.

(f) Hubs, for threaded attachment of steel conduit to sheet metal enclosures, where required, shall be Appleton Type HUB, or equivalent types by T & B; Efcor; Myers Scru-tite; or equal.

(g) Transition fittings to mate steel to PVC conduit, and PVC access fitting, shall be as furnished or recommended by the manufacturer of the PVC conduit.

(h) Expansion couplings shall be installed wherever a raceway crosses a structural expansion joint. Such couplings shall be expansion and deflection fittings and shall accommodate late and transverse movement. Fittings shall be O-Z Type "D"; CrouseHinds Type "XD"; or equal. These fittings are required in metallic and non-metallic raceway installations; when the installation is in a non-metallic run, a 3 feet length of rigid conduit shall be used to connect the non-metallic conduit to the fitting.

400.20 BOXES AND COVERS

(a) Outlet boxes shall be used as junction boxes wherever possible. Where separate pullboxes are required, they shall have screw covers; outdoor boxes shall be galvanized with gasketed covers and threaded hubs. Indoor boxes shall be painted.

(1) Outlet, switch, and junction boxes flush-mounted in general purpose locations shall be one-piece, pressed steel, galvanized.

(2) Outlet, switch, and junction boxes in damp or wet locations and where surface mounted, shall be cast ferrous with zinc or cadmium plating and enamel finish and with mounting lugs. Boxes flush-mounted in concrete shall conform to this requirement, and no mounting lugs shall be required.

(3) Outlet, control station, and junction boxes, including covers, in corrosive locations shall be fiber glass reinforced polyester and shall be furnished with mounting lugs.

401.21 MOTOR CONTROL

(a) WELL PUMP MOTOR

(1) The Contractor shall furnish and install combination reduced voltage auto-transformer magnetic starter with motor circuit protector; starter shall be NEMA size V minimum. Motor starter shall have a 120-volt control transformer, and shall have a cover mounted "Run"/"Off"/"Auto" switch and run indicator and shall have a NEMA I enclosure. "Motor Circuit Protector" shall have low level sensing and a preventative to eliminate settings in excess of 1300 percent of sensor rating and shall be operable with cover door closed. Overload trip elements shall be ambient temperature compensated with manual reset button. Starter shall be the closed transition type with taps at 50, 65 and 85 percent full voltage taps set at 65 percent tap. The auto-transformer shall be protected by a thermal switch to prevent prolonged energization in

the "start" sequence. Timing of "Run" contact pick-up shall be adjustable.

(b) CHLORINE BOOSTER

(1) The Contractor shall furnish a corrosion resistant non-metallic control enclosure to house the control components shown on the drawing; enclosure shall have mounting lugs and shall be Crouse-Hinds "NJB" or Carlon, "Circuit-Safe" or equal. Pushbutton devices shall be corrosion resistant, Westinghouse PB-2 or equal. Contrctor identifier "CPR" within enclosure shall have contacts rated at 10A. 240 V.A.C. and a 240V.A.C. operating coil.

(2) Contractor shall furnish a two-pole manual starter for the booster pump; starter shall be NEMA IV enclosed.

400.22 NAMEPLATES

Nameplates shall be fabricated from white-center, black-face laminated plastic engraving stock, formica type ES-1, or equal. Each shall be fastened securely using fasteners of brass, cadmium plate, or stainless steel, screwed into inserts or tapped holes, as required. Engraved characters shall be block style of adequate size to be read easily at a distance of 6 feet with no characters smaller than 1/8-inch high. Abbreviations shall be a minimum. Nameplate application criteria is stated in Paragraph 400.13 of Section 400.

400.23 TELEMETRY & CONTROL EQUIPMENT

(a) The City of Glendale Arizona will furnish to the Contractor, at the Cholla Water Treatment Plant, the following equipment:

1. Telemetry cabinet.

2. Pressure switches, two.

3. Flow-to-waste control valve.

4. Pressure transmitter

(b) The Contractor shall inspect this equipment and inform the City of Glendale of damage prior to installation. Inspection here, shall be limited to removing shipping wrappers and inspection for physical damage to enclosing cabinets or housings.

(c) Contractor shall transport, install equipment and connect as indicated, control wire identification shall be determined by related wire/terminal numbers in the telemetry cabinet. Equipment shall not be energized without prior authorization from the City of Glendale.

(d) Contractor may contact Brian Day 602/931-5470 for information relative to owner furnished equipment.

(e) The Contractor shall install control devices in the telemetry cabinet as indicated on the drawing. Relay FWCX shall be 3-pole with 5A contacts and shall be enclosed within a plastic case.

400.24 TESTS, INSPECTIONS, CLEAN-UP, AND SPARES

(a) The Contractor shall furnish the labor and equipment to perform the testing described herein; testing shall be accomplished in the presence of the Owner and shall encompass the following:

(1) Remote and local controls of all motors and solenoids. Prior to testing of completed systems, or subsystems, the Contractor shall adjust pressure switches. Adjustment of valve limit switches shall be accomplished under the supervision of a representative of the valve manufacturer.

(b) Test reports required by other paragraphs of this Section shall be submitted as described for shop drawings. Such reports must be approved prior to final acceptance of the project.

(c) The project will be subject to continual inspection during construction, but particular attention will be placed on wire terminations, identification, setting of overload devices, cleanup and record drawings.

(d) Interior and exterior surfaces shall be cleaned of oil, grease, dirt, plaster, concrete etc.; surface scratches shall be repaired to match factory finishes. Panelboard and starter interiors shall be vacuumed cleaned. Pullboxes interiors shall be free of all dirt and debris. Cleaning referred to herein describes the condition of equipment at the time of final inspection.

(e) Prior to final acceptance of project furnish one spare set of dual element fuses for the well pump starter.

- END OF SECTION -

CITY OF GLENDALE

GLENDALE, ARIZONA

W823043E

MODIFICATIONS TO WELL NO. 8

MAYOR

GEORGE R. RENNER

CITY COUNCIL

RICHARD BELLAH
JOE A. FALBO
BRUCE E. HEATWOLE
ROBERT L. HUFFMAN
QUENTIN V. TOLBY
DILLIS R. WARD

CITY MANAGER

MARTIN VANACOUR

CITY CLERK

LAVERGNE BEHM

CITY ATTORNEY

PETER VAN HAREN

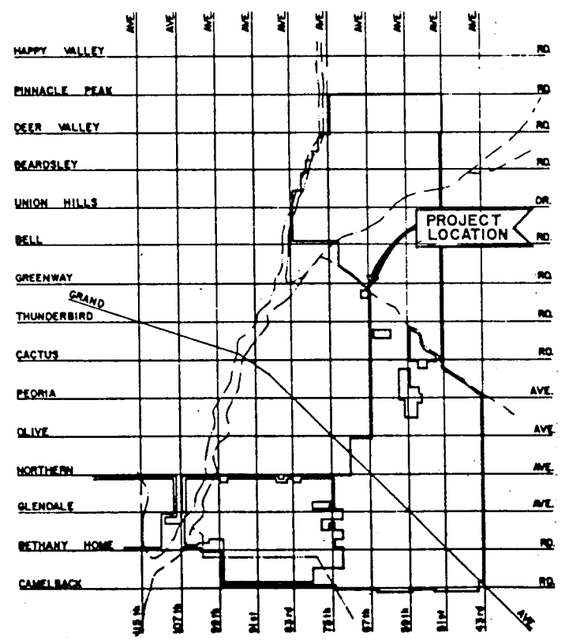

VICINITY MAP

INDEX OF DRAWINGS

CIVIL

C-1	TITLES, VICINITY MAP AND LIST OF DRAWINGS.
C-2	PLAN VIEW - PIPING
C-3	PIPING PLANS AND DETAILS
C-4	PIPING PROFILES
C-5	PIPING DETAILS

ELECTRICAL

E-1	ELECTRICAL PLANS AND DETAILS

APPROVED BY

CITY ENGINEER	4/30/85 DATE
MARICOPA COUNTY HEALTH DEPARTMENT	5-1-85 DATE
FLOOD CONTROL DISTRICT OF MARICOPA COUNTY	5/1/85 DATE

REV	DATE	BY	DESCRIPTION

SCALE: NONE

DESIGNED A. Vargas
DRAWN C. Griffith
CHECKED

SUBMITTED PROJECT ENGINEER — R.C.E. NO. — DATE 4/30/85
RECOMMENDED JAMES M. MONTGOMERY CONSULTING ENGINEERS, INC. — R.C.E. NO. 15127 — DATE 4/30/85

JAMES M. MONTGOMERY CONSULTING ENGINEERS, INC.
5050 NO. 22ND ST., SUITE A-117, PHOENIX, AZ 85016

APPROVED — DATE
APPROVED — DATE

CITY OF GLENDALE, ARIZONA
MODIFICATIONS TO WELL NO. 8 - W823043E
TITLES, VICINITY MAP AND INDEX OF DRAWINGS

SHEET C-1 OF 6 SHEETS

NOTE: THE ACTUAL LOCATION OF THE PUMP STATION HAS BEEN SHIFTED 20 FT. WEST OF THE LOCATION SHOWN. THE LOCATION OF THE PIPE AND VALVES FOR WELL 8 REMAINS AS SHOWN.

GENERAL NOTES

1. BENCH MARK LOCATION:
   M.C.H.D. BRASS CAP IN HANDHOLE @ 67th AVENUE AND GREENWAY ROAD - U.S.C.E. DATUM ELEVATION = 1218.96'
2. LOCATIONS OF EXISTING BURIED FACILITIES OR OF FACILITIES TO BE INSTALLED BY OTHERS ARE APPROXIMATE AND ARE SHOWN FOR INFORMATIONAL PURPOSES ONLY. PRIOR TO STARTING CONSTRUCTION, THE CONTRACTOR SHALL FIELD VERIFY THE LOCATIONS OF THESE FACILITIES AND ADJUST THE PIPE SLOPE & ALIGNMENTS AS NECESSARY FOR PROPER CONSTRUCTION OF THE PIPELINE. ALL SLOPE AND ALIGNMENT REVISIONS SHALL BE SUBMITTED TO THE ENGINEER FOR APPROVAL PRIOR TO THE START OF CONSTRUCTION.
3. THE CONTRACTOR SHALL USE INDUSTRIAL STANDARD BEND ANGLES AT ALL ANGLE POINTS SHOWN ON THE DRAWINGS. ADDITIONAL OFFSETS SHALL BE OBTAINED BY PULLING THE PIPE JOINTS (WITHIN MANUFACTURER'S TOLERANCES) TO ACHIEVE THE DESIRED ALIGNMENT.

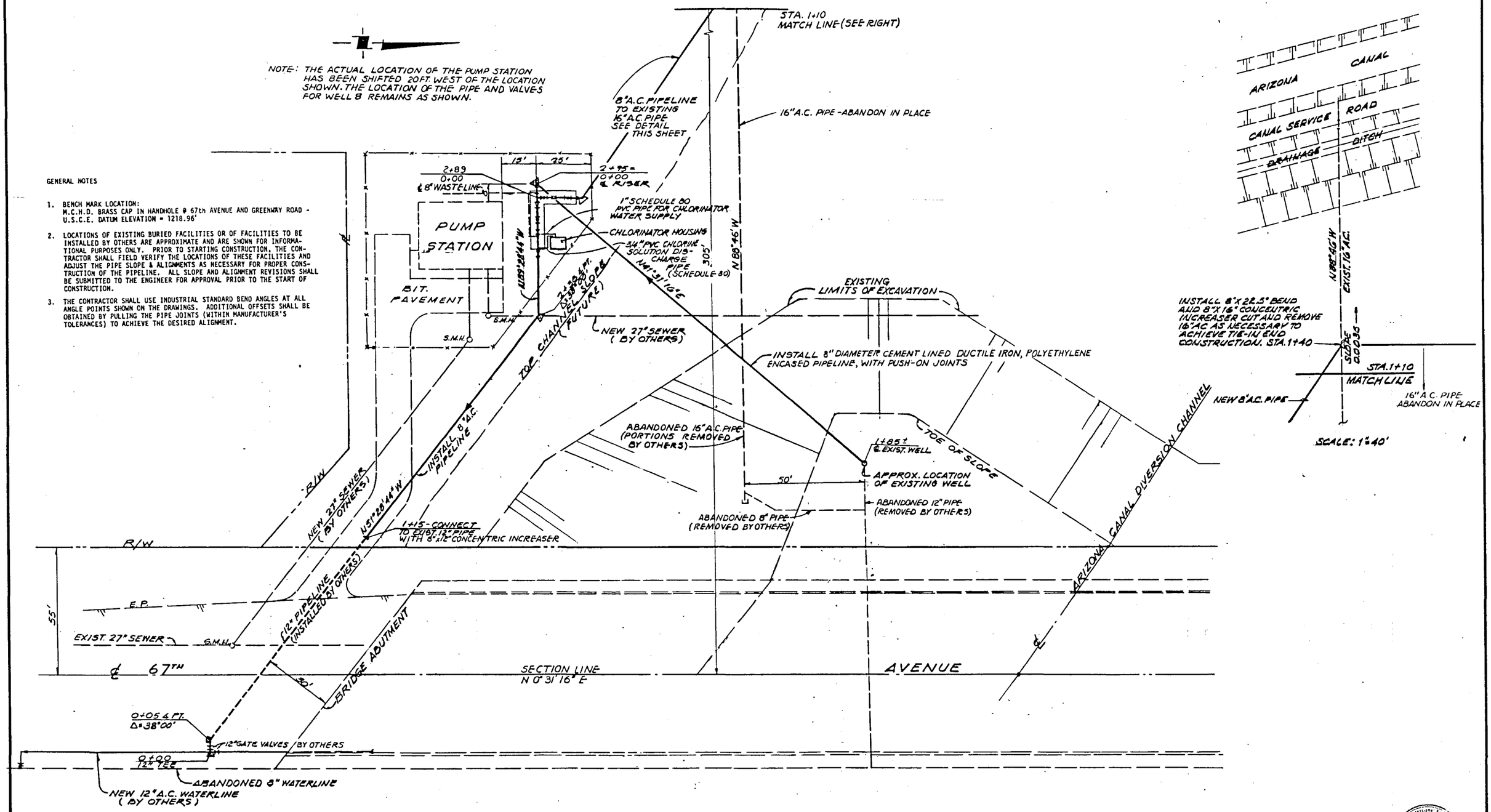

SITE PLAN

REV	DATE	BY	DESCRIPTION

SCALE: 1" = 20'

DESIGNED A. Vargas
DRAWN A. Vargas
CHECKED T. Dalgowski

SUBMITTED Thomas M. Dalgowski — PROJECT ENGINEER — R.C.E. NO. — DATE 4/30/85
RECOMMENDED Lawrence Haight — JAMES M. MONTGOMERY CONSULTING ENGINEERS, INC. — R.C.E. NO. 15129 — DATE 4/30/85

JAMES M. MONTGOMERY CONSULTING ENGINEERS, INC.
9830 No. 32nd STREET, SUITE A-117, PHOENIX, ARIZONA 85028

APPROVED — DATE
APPROVED — DATE

CITY OF GLENDALE, ARIZONA
MODIFICATIONS TO WELL 8 - W823043E
PLAN VIEW - PIPING

SHEET C-2 OF 6 SHEETS

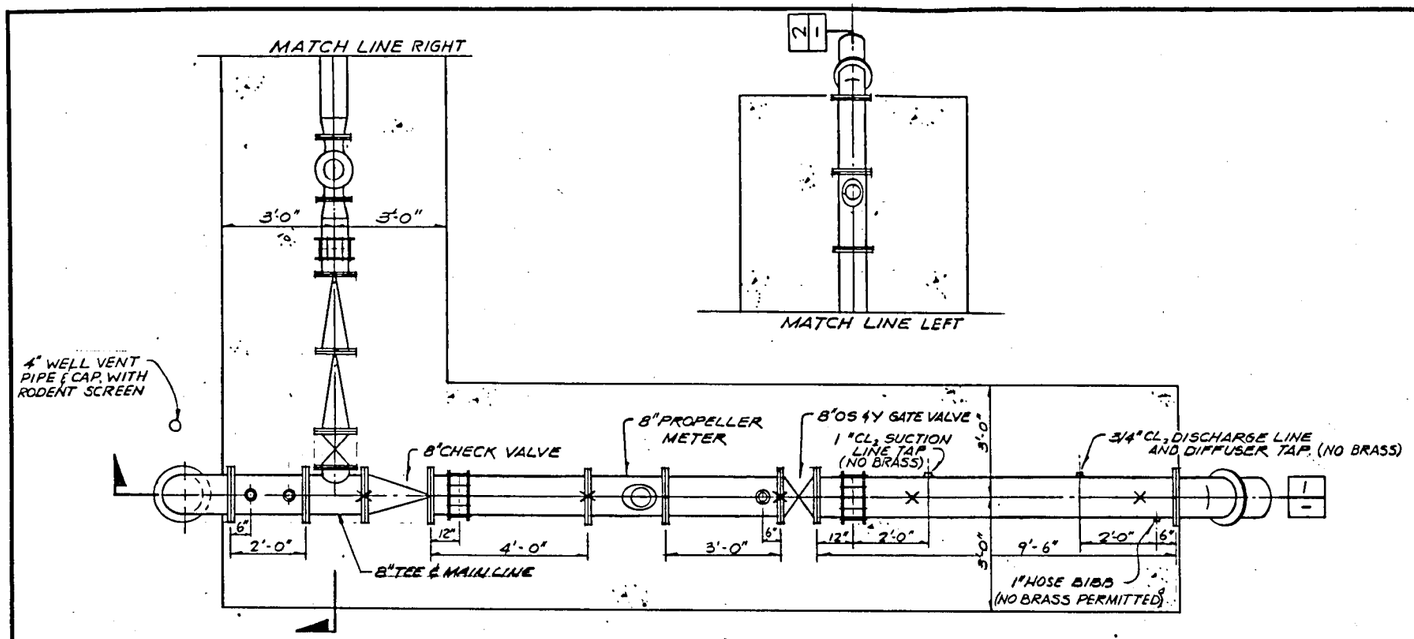

PLAN
1/2" = 1'-0"

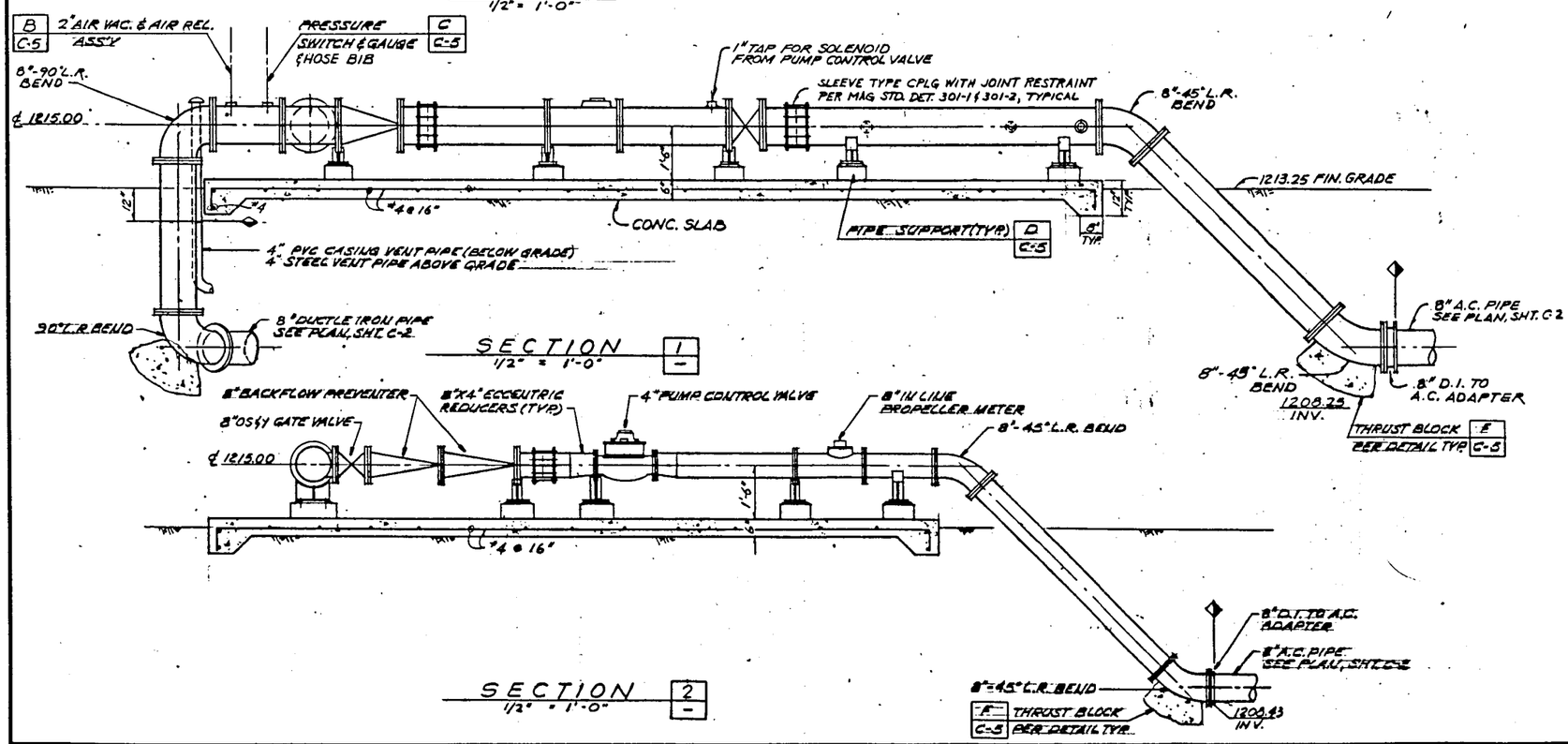

SECTION 1
1/2" = 1'-0"

SECTION 2
1/2" = 1'-0"

NOTES:
1. CONTRACTOR, SHALL REMOVE EXIST. WELL CAP & CASING AS NECESSARY TO INSTALL NEW PITLESS UNIT.
2. THE CONTRACTOR SHALL PLACE A 1½" THICK GROUTED SEAL (MIN.) AROUND THE WELL CASING TO A DEPTH OF 20' BELOW FIN. GRADE.

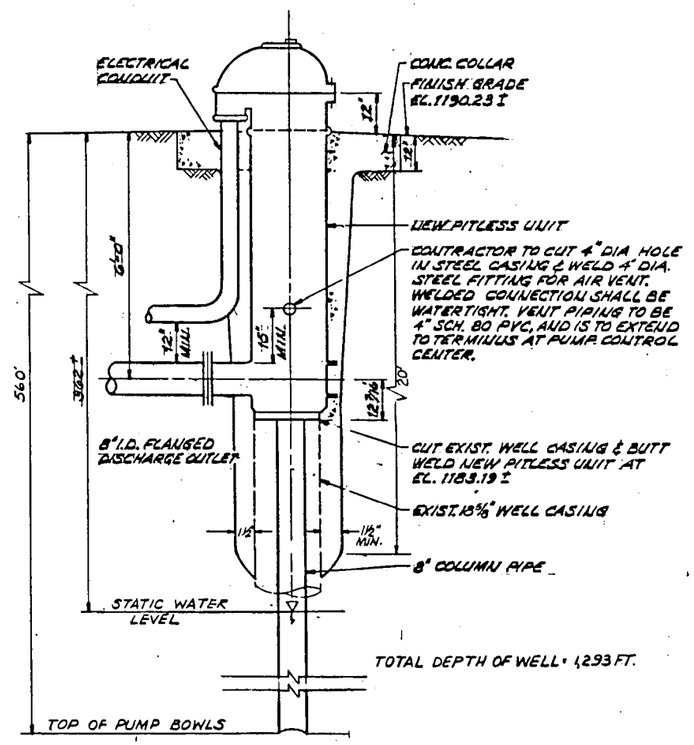

PITLESS UNIT INSTALLATION
NO SCALE

REV	DATE	BY	DESCRIPTION

SCALE: AS NOTED

DESIGNED A. Vargas
DRAWN A. Vargas
CHECKED

SUBMITTED — PROJECT ENGINEER — R.C.E. NO. — DATE 4/30/85
RECOMMENDED — JAMES M. MONTGOMERY CONSULTING ENGINEERS, INC. — R.C.E. NO. 15129 — DATE 4/30/85

JAMES M. MONTGOMERY CONSULTING ENGINEERS, INC.
9830 No. 32nd STREET, SUITE A-117, PHOENIX, ARIZONA 85028

APPROVED — DATE
APPROVED — DATE

CITY OF GLENDALE, ARIZONA
MODIFICATIONS TO WELL 8 - W8230436
PIPING PLAN & DETAILS

SHEET C-3 OF 6 SHEETS

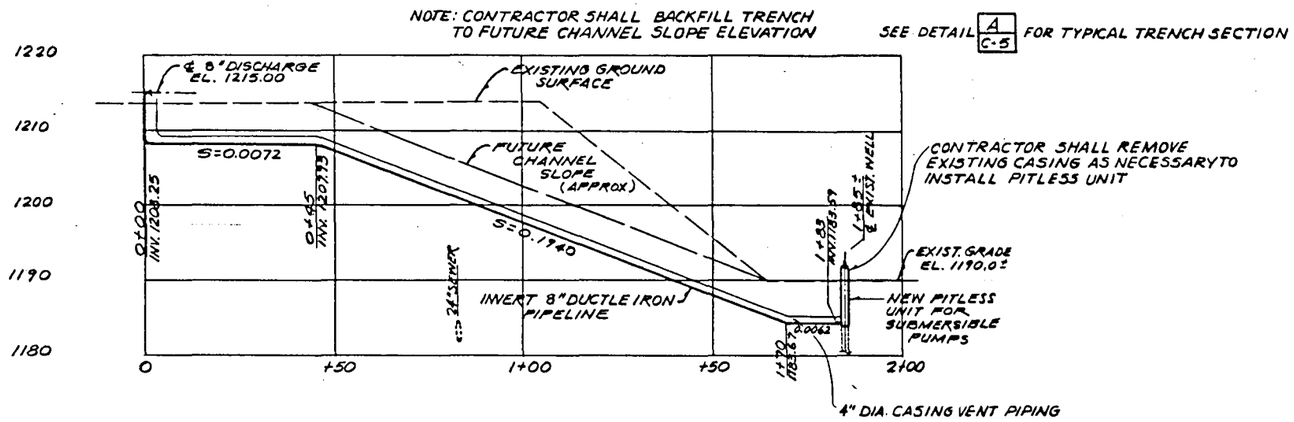

PROFILE - 8" WELL DISCHARGE

HORIZ. 1" = 20'
VERT. 1" = 10'

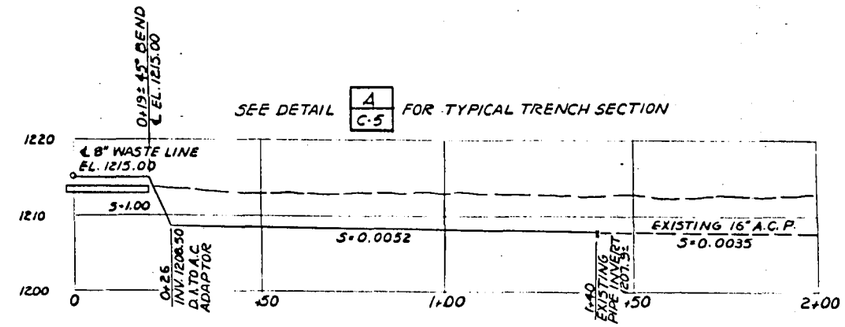

PROFILE - 8" SRP DISCHARGE

HORIZ. 1" = 20'
VERT. 1" = 10'

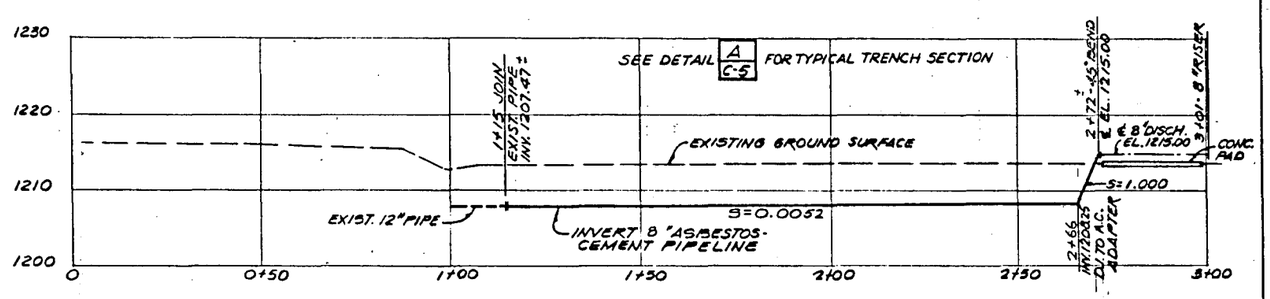

PROFILE - 8" PIPELINE

HORIZ. 1" = 20'
VERT. 1" = 10'

1. CYLINDER MOUNTED CHLORINATORS
2. WALL MOUNTED AUTOMATIC CHANGEOVER UNIT
3. REMOTE FLOWMETER
4. EJECTOR
5. BOOSTER PUMP
6. 3/4" SHUT-OFF VALVE
7. 1" Y-STRAINER AND BLOW-OFF VALVE
8. UNION
9. 3/4" PRESSURE RELIEF VALVE
10. 3/4" CHECK VALVE
11. 3/4" WATER PRESSURE GAUGE
12. 1" SHUT-OFF VALVE

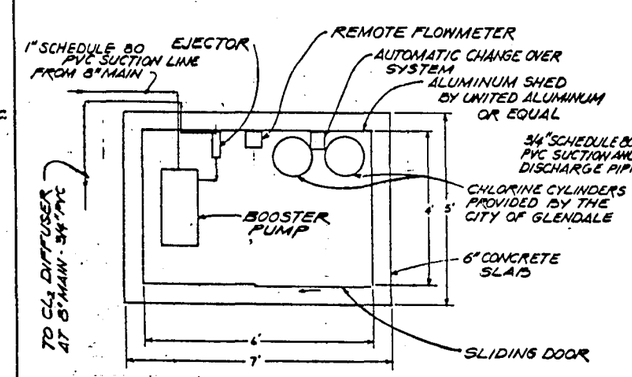

CHLORINATION FACILITIES AND HOUSING - PLAN

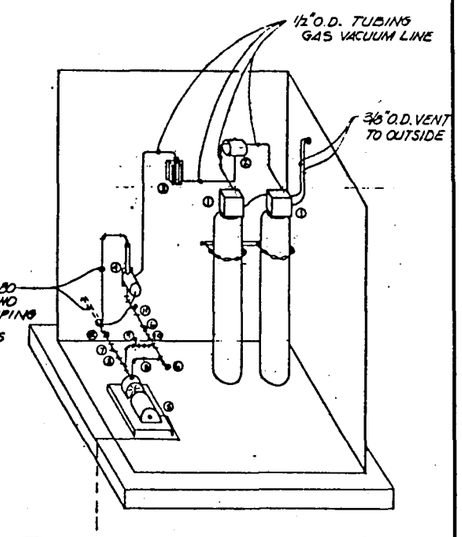

CHLORINATION BUILDING PIPING SCHEMATIC

REV	DATE	BY	DESCRIPTION	SCALE: AS NOTED	DESIGNED A. Vargas / DRAWN A. Vargas / CHECKED T. McGrath	SUBMITTED Thomas M. McGrath PROJECT ENGINEER — R.C.E. NO. — 4/30/85 DATE	RECOMMENDED James M. Montgomery JAMES M. MONTGOMERY CONSULTING ENGINEERS, INC. — 15729 R.C.E. NO. — 4/30/85 DATE	JAMES M. MONTGOMERY CONSULTING ENGINEERS, INC. 9830 No. 32nd STREET, SUITE A-117, PHOENIX, ARIZONA 85028	APPROVED ____ DATE / APPROVED ____ DATE	CITY OF GLENDALE, ARIZONA / MODIFICATIONS TO WELL 8 - W823043E / PIPING PROFILES	SHEET C-4 OF 6 SHEETS

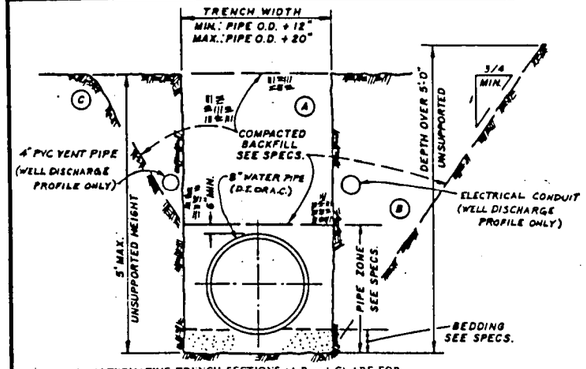

1. ALTERNATIVE TRENCH SECTIONS (A,B and C) ARE FOR USE ONLY WHERE STABLE, COMPACT SOIL CONDITIONS EXIST:

   A. Vertical trench walls-Section (A)
      1. For depths up to 5 feet, no trench support is required.
      2. For depths exceeding 5 feet, shoring or solid sheathing is required.

   B. Sloping trench walls-Section (B)
      1. Sloping trench wall section shall not be used without approval of engineer, unless specifically designated on plans or in specifications.
      2. Except as approved by engineer, unsupported sloping trench walls shall not be steeper than 3/4 horiz. to 1 vert.

   C. Combination of vertical and sloping trench walls-Section (C)
      1. Trench depths not exceeding 5 feet shall have vertical walls in pipe zone unless otherwise approved by engineer, or where specified.
      2. For trenches with combined walls and any depth exceeding 5 feet, design calculations by a registered civil engineer and approval by governing agency of support methods are required.

2. WHERE WET, UNSTABLE OR RUNNING SOIL IS ENCOUNTERED, SOLID SHEATHING IS REQUIRED FOR ALL VERTICAL TRENCH WALLS.

TYPICAL TRENCH SECTION — A

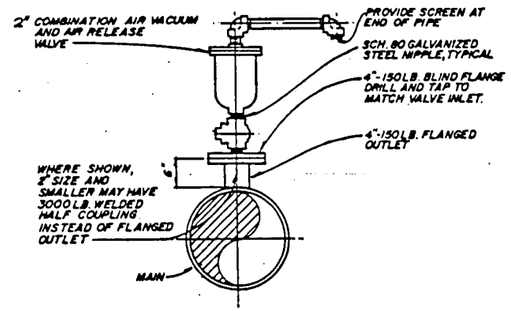

AIR-VACUUM AND AIR RELEASE VALVE ASS'Y. 3" AND SMALLER — B

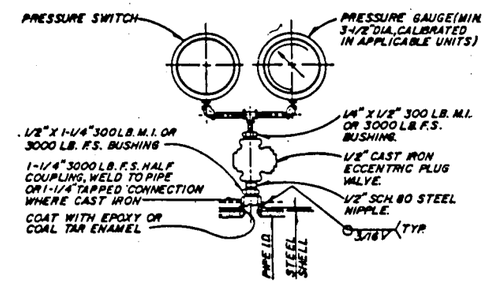

PRESSURE GAUGE AND PRESSURE SWITCH — C

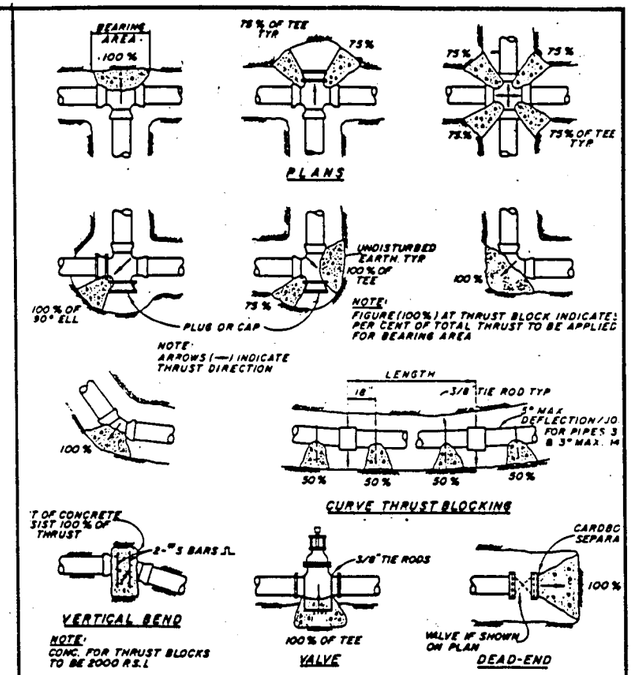

THRUST PER PSI OF WATER PRESSURE AT VARIOUS FITTINGS				
PIPE SIZE	DEAD END OR TEE	90° ELBOW	45° ELBOW	22-1/2° ELBOW
4	19	27	15	7
6	39	55	30	15
8	67	94	51	26
10	109	154	84	43
12	155	218	119	61
14	210	296	161	82
16	272	383	209	106
18	351	494	269	137
20	434	611	333	169
24	623	878	478	244

EXAMPLE:
8-INCH 90° ELBOW, PRESSURE = 200 lb./SQ. FT.
FROM TABLE: THRUST = 94 x 200 = 18,800 lb.
ASSUME BEARING STRENGTH OF SOIL = 2000 lb./SQ. FT.
$\frac{18,800}{2000}$ = 9.4 SQ. FT. = AREA OF BEARING REQUIRED FOR THRUST BLOCK.

SIDE THRUST PER 100 lb./SQ. IN. PRESSURE PER DEGREE OF DEFLECTION			
PIPE SIZE	SIDE THRUST-lb.	PIPE SIZE	SIDE THRUST-lb.
4	35	14	377
6	72	16	486
8	122	18	665
10	197	20	790
12	278	24	1150

MULTIPLY THRUST BY DEGREE OF DEFLECTION TO OBTAIN TOTAL THRUST

NOTES:
1. IN USING THE ABOVE TABLES, USE THE MAXIMUM INTERNAL PRESSURE ANTICIPATED (i.e. HYDROSTATIC TEST PRESSURE, POSSIBLE SURGE PRESSURE DUE TO PUMP SHUT-OFF, ETC.
2. SEE SOILS REPORT FOR BEARING STRENGTH OF SOIL. IN THE ABSENCE OF A SOILS REPORT, AN AVERAGE SOIL (SPADABLE MEDIUM CLAY) CAN BE ASSUMED TO HAVE A BEARING STRENGTH OF 2000 P.S.F.
3. THRUST BLOCKS ARE NOT REQUIRED ON P.V.C. PIPE WITH SOLVENT WELDED JOINTS.

CONCRETE THRUST BLOCKS FOR CAST IRON ASBESTOS CEMENT AND P.V.C. PIPE — F

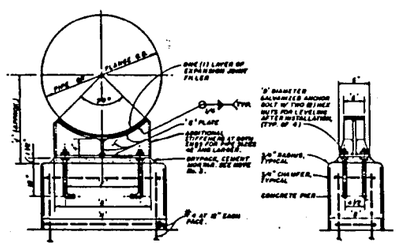

DIMENSIONS IN INCHES													
NOMINAL PIPE SIZE	A	B	C	D	EXPOSITION								
					PIPE				ELBOW				
					1'	2'	3'	4'	1'	2'	3'	4'
4	6	12	3-0	3-0	4.70	8	12	16	9.19	9	16	12
6	6	12	3-0	3-0	5	9	13	11	7.90	9	16	14
8	6	12	3-0	3-0	5	9	16	12	5	13	16	13
10	6	12	3-0	3-0	7	11	17	13	12	16	20	20
12	6	12	3-0	3-0	8	12	17	24	12	16	21	17
14	6	12	3-0	3-0	8	13	19	18	12	19	24	18
16	6	12	3-0	3-0	10	14	20	18	13	19	24	18
18	6	12	3-0	3-0	10	15	21	17	15	21	26	21
20	6	12	3-0	3-0	12	16	24	18	15	23	28	22
24	6	12	3-0	3-0	13	19	24	18	15	24	30	23
30	6	12	3-0	3-0	14	21	27	24	15	26	33	24
36	6	12	3-0	3-0	16	23	30	25	20	30	38	28
42	6	12	3-0	3-0	18	26	32	24	22	33	38	28
48	6	15	3-0	3-0	19	27	32	25	24	34	40	30
42	8	18	3-0	1	21	31	38	29	27	39	46	33
48	8	18	3-0	1	24	35	42	32	30	44	50	37
54	8	18	3-0	1	26	40	46	34	34	48	56	40
60	8	18	3-0	1-6	32	45	52	37	38	54	60	44
66	8	18	3-0	1-6	33	49	54	40	40	58	66	47
72	8	18	3-0	1-6	34	53	60	43	43	70	70	50

NOTES:-
1. SIZE OF SUPPORTING PIPE AND PLANKS ALTERNATELY ON THE SAME LINE. CONCRETE TIE AS FOR PIPE SUPPORTS SHALL ALL HAVE THE SAME DIMENSIONS AS THE PLANK SUPPORT.
2. PIPE SUPPORTS TO BE LOCATED IN PLACE AT POINTS MARKED THUS: (2)
3. WHERE SUFFICIENT DIFFERENTIAL SETTLEMENT IS LIKELY TO OCCUR, SHIM AS DIRECTED BY THE ENGINEER.
4. GALVANIZE AFTER FABRICATION.

PIPE SUPPORT — D

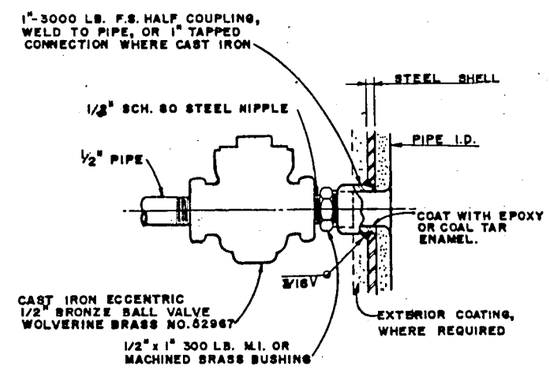

PIPE CONNECTIONS — E

REV	DATE	BY	DESCRIPTION

SCALE: NONE

DESIGNED A. Vergara
DRAWN C. Griffith
CHECKED T. Mahjouri

SUBMITTED Thomas M. Gilbreath — PROJECT ENGINEER — R.C.E. NO. — 4/30/85 DATE
RECOMMENDED James M. Montgomery — JAMES M. MONTGOMERY CONSULTING ENGINEERS, INC. — 15179 R.C.E. NO. — 4/30/85 DATE

JAMES M. MONTGOMERY CONSULTING ENGINEERS, INC.
9830 No. 32nd STREET, SUITE A-117, PHOENIX, ARIZONA 85028

APPROVED — DATE
APPROVED — DATE

CITY OF GLENDALE, ARIZONA
MODIFICATIONS TO WELL 8 - W823043E
PIPING DETAILS

SHEET C-5 OF 6 SHEETS

JOB NO. FILE DC 7-82

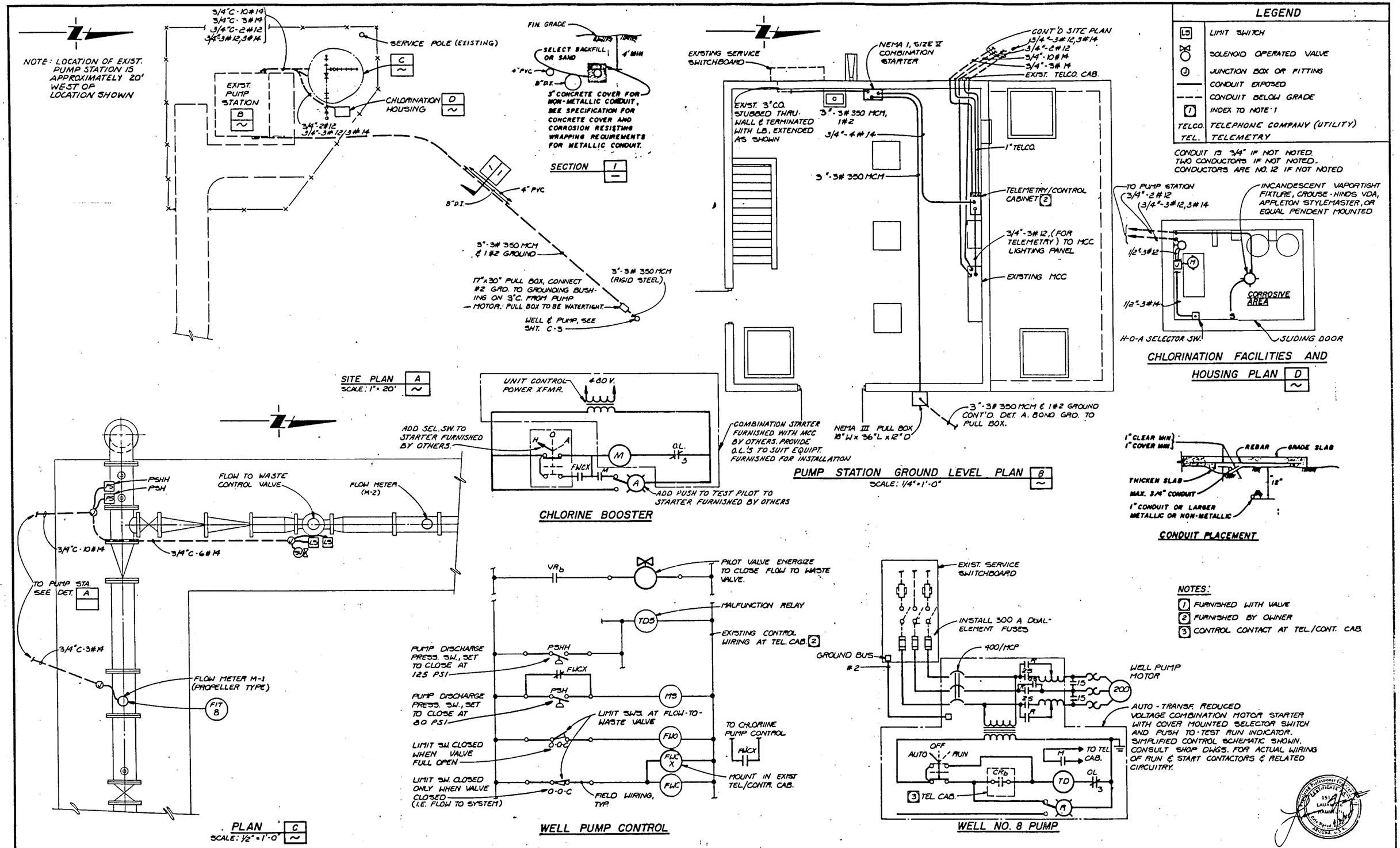

REV	DATE	BY	DESCRIPTION

SCALE: AS NOTED

DESIGNED B. LATCH
DRAWN C. TERRAZAS
CHECKED Barbara Latch

SUBMITTED Thomas M. Galkowski, PROJECT ENGINEER — R.C.E. NO. — DATE 4/30/85
RECOMMENDED Steven Hoyt, JAMES M. MONTGOMERY CONSULTING ENGINEERS, INC. — R.C.E. NO. 15129 — DATE 4/30/85

JAMES M. MONTGOMERY CONSULTING ENGINEERS, INC.
6888 NO. 32ND ST., SUITE A-117, PHOENIX, AZ 85016

APPROVED ____ DATE
APPROVED ____ DATE

CITY OF GLENDALE, ARIZONA
MODIFICATIONS TO WELL 8 - W823043E
ELECTRICAL PLANS AND DETAILS

SHEET E-1 OF 6 SHEETS

JOB NO. 983.0021 FILE ____ 00