Property of
Flood Control District of MC Library
Phoenix, AZ 85009

DESIGN CONCEPT REPORT
for
GROVERS AVENUE
STORM DRAIN LATERAL

FCD No.: 93-21

Your Comments to me no later than Friday, Feb. 4, 1994

Besian.

Morrison Maierle/CSSA

ENGINEERS
PLANNERS
SURVEYORS

FLOOD CONTROL DISTRICT
RECEIVED
JAN 25 1994
CH ENG | P & PM
OCP | HYDRO
ADMIN | MAINT
FINANCE | FILE
G & O
LEGAL
REMARKS

Check
1. Classification
2. Red. factors for gutters
3. MH losses
4. Junction losses

DESIGN CONCEPT REPORT
for
GROVERS AVENUE
STORM DRAIN LATERAL

FCD No.: 93-21

SUBMITTED TO:

FLOOD CONTROL DISTRICT OF MARICOPA COUNTY
2801 WEST DURANGO STREET
PHOENIX, AZ 85009

Bruce J. Friedhoff
Registered Professional Engineer (Civil)
CERTIFICATE NO. 13483
BRUCE J. FRIEDHOFF
Date Signed 1/24/94
ARIZONA, U.S.A.

SUBMITTED BY:

Morrison Maierle/CSSA INC.
An Arizona Corporation

ENGINEERS
PLANNERS
SURVEYORS

4621 North 16th Street
Suite D-401
Phoenix, Arizona 85016
Phone: 602/277-2828

JANUARY 24, 1994

MM/CSSA Project No.: 8156.001

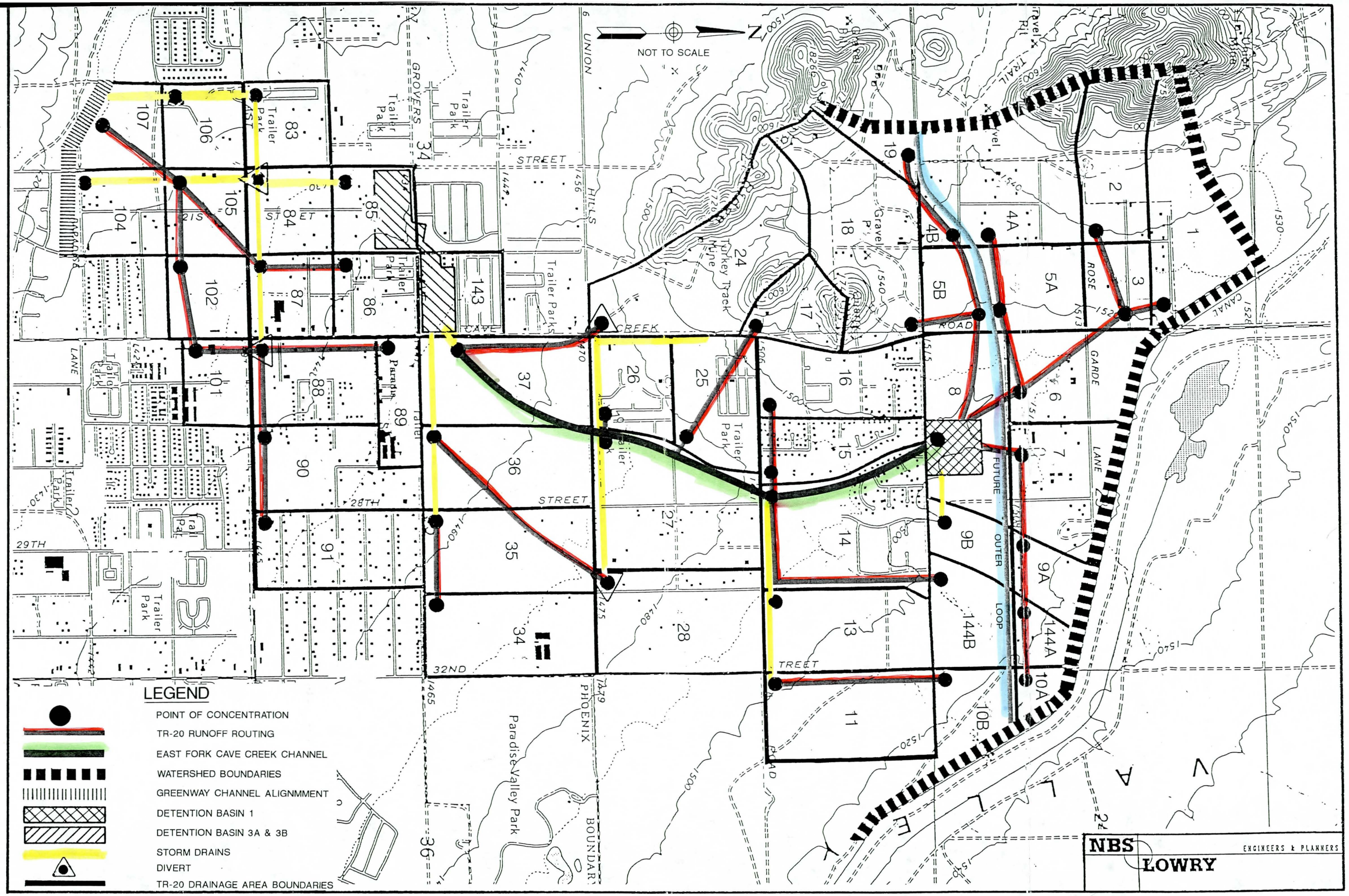
NOT TO SCALE
N
LEGEND
POINT OF CONCENTRATION
TR-20 RUNOFF ROUTING
EAST FORK CAVE CREEK CHANNEL
WATERSHED BOUNDARIES
GREENWAY CHANNEL ALIGNMMENT
DETENTION BASIN 1
DETENTION BASIN 3A & 3B
STORM DRAINS
DIVERT
TR-20 DRAINAGE AREA BOUNDARIES
NBS
LOWRY
ENGINEERS & PLANNERS
UNION HILLS
GROVERS STREET
CAVE CREEK
ROSE GARDE CANAL
FUTURE OUTER LOOP
Paradise Valley Park
PHOENIX BOUNDARY
Trailer Park
Turkey Track Mine
Gravel Pit
29TH STREET
28TH STREET
32ND STREET
ROAD
LANE

Morrison Maierle/CSSA INC.
An Arizona Corporation

ENGINEERS
PLANNERS
SURVEYORS

4621 North 16th Street
Suite D-401
Phoenix, Arizona 85016
Phone: 602/277-2828

January 24, 1994

Mr. Mike Lopez, P.E.
Planning & Project Management Division
Flood Control District of Maricopa County
2801 West Durango
Phoenix, AZ 85009

RE: Grovers Avenue Storm Drain Lateral
Cave Creek Road to 32nd Street
FCD No. 93-21
MM/CSSA Job No. 8156.001
DESIGN CONCEPT SUBMITTAL

Dear Mr. Lopez:

Enclosed herewith are six (6) copies of the Design Concept Report for your review and approval. The results of our study indicate that:

1. The preferred pipe material for bidding purposes is large diameter reinforced concrete pipe (RCP)(Round) that varies from 42 to 96 inches in diameter.

2. The City of Phoenix will need to approve installing the storm drain pipe in approximately 500 feet of existing water line easement between 24th and 26th Streets.

3. Approximately 600 ft. x 25 ft. of temporary construction easement will need to be obtained from the Contention Mining Claim owners.

4. Approximately 200 feet of 8 inch sanitary sewer line will need to be relocated.

5. The probable construction cost is $1,550,390.

6. Construction can be completed in 120 calendar days.

Please transmit these documents to the City of Phoenix, affected utility companies, and the Maricopa County Department of Environmental Management for coordination. If you have any questions please contact either myself or Alex Batt at 277-2828. We look forward to your comments.

Sincerely,

MORRISON-MAIERLE/CSSA, INC.

Bruce J. Friedhoff

Bruce J. Friedhoff, P.E.
Project Manager

TABLE OF CONTENTS

LIST OF APPENDIX ii
LIST OF TABLES ii
LIST OF FIGURES ii

A. INTRODUCTION 1
B. PREVIOUS STUDIES 2
C. SITE CONDITIONS 4
1. Drainage Area 4
2. Topography 5
3. Soils 5
4. Utility Conflicts 4
5. Right-of-way and Easements 7
6. Private and Public Access 7

D. HYDROLOGY 8
1. Drainage Map 8
2. Storm Frequency and Distribution 9
3. Lag Time 9
4. Runoff 9

E. LATERAL DESIGN 10
1. Design Criteria 10
2. Constraints 11
3. Alignment 12
4. Configuration 12
5. Junction Structure 12
6. Inlet Locations 14
7. Maintenance 16
8. Value Engineering 16

F. DESIGN REVIEWS AND PERMITS 17
1. City of Phoenix 17
2. Utility Companies 17
3. Maricopa County Department of Environmental Management 18
4. Storm Water Pollution Prevention Plan/NOI 18
5. Schools 18

G. CONSTRUCTION
1. Phasing 20
2. Duration and Schedule 20
3. Hazardous Materials 21
4. Cost 21

H. CONCLUSION 21

REFERENCES 22

LIST OF TABLES

TABLE 1 Inlet Design Summary 10

TABLE 2 Design Criteria 11

TABLE 1 Peak Design Flows 14

LIST OF FIGURES

FIGURE 1 Typical Section 13

FIGURE 2 Junction Structure Details 15

FIGURE 3 Inlet Details 6

LIST OF APPENDIXES

APPENDIX A - CALCULATIONS

APPENDIX B - DRAINAGE MAP

APPENDIX C - HYDRAULIC PROFILE MAP

APPENDIX D- RIGHT-OF-WAY MAP

Registered Professional Engineer (Civil)
CERTIFICATE NO.
13483
BRUCE J.
FRIEDHOFF
Date Signed 1/24/94
ARIZONA, U.S.A.

A. INTRODUCTION

Grovers Avenue Storm Drain Lateral is located in Phoenix Arizona in the northern part of the City between Bell Road, Union Hills Drive, Cave Creek Road, and 32nd Street. The proposed storm drain lateral is part of a regional flood control project designed to intercept and convey the 100-year storm water runoff to the Greenway Outfall Channel. Previous studies have determined the general size, location, and interaction of facility components such as interceptor drains and channels, detention basins, and outfall drains and channels. The project will be constructed by the Flood Control District of Maricopa County (FCDMC) and will be operated and maintained by the City of Phoenix (COP).

It is the purpose of this report to recommend project concepts, alternatives, and design requirements to be used in preparing final design and construction documents for the Grovers Avenue Storm Drain Lateral. These recommendations will be reviewed and considered by the FCDMC, COP, utility companies, and other affected agencies. Comments will be incorporated into the final design of facility improvements. All recommendations need to be consistent with the recommendations of previous studies and final designs.

In preparing this report, three previous studies by the FCDMC affecting the Grovers Avenue Storm Drain Lateral were reviewed to determine the concepts, design criteria, and system requirements pertaining to Grovers Avenue. We collected utility maps and investigated the site and drainage area to identify drainage patterns, existing facilities, and design constraints (ie. utility conflicts, available right-of-way, and access requirements). We performed a topographic engineering survey and Speedy and Associates, Inc. performed a geotechnical investigation in order to determine the site conditions pertaining to the construction of physical improvements.

We prepared a drainage map for the delineation of 22 subareas and performed an hydrologic analysis to determine the storm water runoff to be used in final design. We evaluated several alternative storm drain alignments and computed the hydraulic profiles for three (3) different types of conduits (ie. RCP, CBC, CIPP) in order to determine the preferred optimum design solution and bidding options. We also located inlets needed to intercept the design flows and computed the initial sizing and configuration.

We contacted the COP and acquired the design, construction, and bid tabulation documents for recently completed storm drain projects in the area (ie. 20th Street and 9th Street). We also contacted pipe manufactures, Hydro Conduit Corporation (RCP & CBC), and KIPP (CIPP) to obtain the most current pricing for these products. We then contacted Blu-Cor Construction Company to find out if there were any special considerations concerning phasing or access control that could have been used to reduce project costs on their last job (20th Street Storm Drain). The 20th Street Storm Drain Project is similar to the Grovers Avenue Project. Both are located in a residential collector street with residential frontage. The information we obtained was then used to help us formulate an opinion concerning the probable construction cost and construction phasing.

Finally, we researched the federal, state, and local regulations to determine any special requirements for the Grovers Avenue Storm Drain Lateral Project.

B. PREVIOUS STUDIES

There have been three (3) studies prepared that are applicable to the Grovers Avenue Storm Drain Lateral Project.

1. Upper East Fork Cave Creek Area Drainage Master Study (Executive Summary), Maricopa County Highway Department, NBS/Lowry, October 12, 1989. The purpose of the study was to determine the status of existing storm water runoff and resulting flooding conditions for a 16 square mile drainage area; identify and evaluate alternative improvements to provide protection for the 100-year storm; and determine preliminary engineering design and project cost estimates. The study used the TR-20 computer code and a two-dimensional flow model to help in delineating overland flow paths on alluvial fans for the 100, 50, and 10-year storms. The results of the study concluded the following:

   a. The drainage area north east of Union Hills and 32nd Street does not contribute flow to the Grovers Avenue Storm Drain Lateral.

   b. The flow north of Union Hills between 26th and 32nd Streets is concentrated at 26th Street and Grovers.

   c. The existing peak flow at 30th Way and Union Hills for the 100-year storm is Q = 402 cfs.

d. The existing peak flows for Grovers Avenue are Q_{100} = 142, 282, and 376 cfs for 30th Way, 28th Street, and 26th Street, respectively.

e. Flows closely approximate those developed by FEMA.

f. Use a 77" x 121" elliptical RCP for 1,450 feet from Detention Basin #3 to 26th Street to convey a design flow of 483 cfs for a construction cost of $580,000.

g. Use a 63"x 98" elliptical RCP for 2,000 feet from 26th Street to 29th Street to convey a design flow of 282 cfs for a construction cost of $680,000.

h. The total construction cost should be $ 1,260,000.

2. Upper East Fork Cave Creek Detention Area Sizing Study, Flood Control District of Maricopa County and City of Phoenix, NBS/Lowry, February 27, 1989. The purpose of the study was to determine the detention basin area sizing criteria for six (6) detention basins for the storm water runoff from the 100-year storm. The objective was to size the basins so that the maximum outflow from the detention basins would not exceed the capacity of the COP storm drainage system (usually the 2-year storm). The study used the TR-20 computer code (SCS Method) with a modified attenuated kinematic wave routing method, the COP S-Curve. The time of concentration was computed as a function of the gutter velocity for an assumed flow of 3 cfs not to be less than 10 minutes. The storm water runoff was computed using a rainfall depth of $P_{100,24}$ = 4.04", a time increment of t = 0.08 hours, a storm duration of 24 hours, an antecedent moisture condition of AMC = 2, and a weighted ultimate build-out SCS curve number of CN = 87. The study concluded the following:

a. The drainage area north east of Union Hills and 32nd Street does not contribute flow to the Grovers Avenue Storm Drain Lateral.

b. The drainage area north of Utopia Road is diverted to the Upper East Fork Channel and does not contribute storm water runoff to the Grovers Avenue Storm Drain Lateral.

c. The drainage area east of 32nd Street is diverted to Basin No. 4 located at the northeast corner of 32nd Street and Grovers Avenue.

d. TR-20 routing for Grovers Avenue from 30th Way to 28th Street is Q_{100} = 282 cfs.

e. Pipe flow for Grovers Avenue from 28th Street to Cave Creek Road is Q_{100} = 483 cfs.

f. The flow at Union Hills and 30th Way is Q_{100} = 149 cfs and is routed to 26th Street and Grovers Avenue, not 28th Street.

3. Cave Creek Watershed, Volume 1.7, Arizona Canal Diversion Channel Area Drainage Master Study, ACDC/ADMS Phase 1;, Flood Control District of Maricopa County; Kaminski Hubbard Engineering, Inc.; May 26, 1993. This study uses the new FCDMC methods for computing storm water runoff. The S-Graph was converted into a unit hydrograph using MCUHP2. The SCS curve number was replaced with the Green-Ampt method for computing infiltration losses. Basin lag was computed using the FCDMC equation and K_n. And, channel routing was approximated using the Muskingum-Cunge method. The study concluded the following:

a. The drainage area at Grovers Avenue and Cave Creek Road is DA = 0.60 sq mi.

b. The peak flow for future conditions at Grovers Avenue and Cave Creek Road for the 6 hour storm is $Q_{100,6}$ = 492 cfs at 4.4 hours.

c. The peak flow for future conditions at Grovers Avenue and Cave Creek Road for the 24 hour storm is $Q_{100,24}$ = 656 cfs at 12.27 hours.

This study also included a comprehensive list of references related to this project. These have been incorporated with the references contained herein.

C. SITE CONDITIONS

1. **DRAINAGE AREA.** The drainage area upstream from the project site and downstream from the Central Arizona Project Canal is approximately 1.83 square miles. Approximately 1.12 square miles will be controlled by the regional flood control project. This leaves approximately 0.71 square miles that will contribute storm water runoff to the Grovers Avenue Storm Drain Lateral. See the Drainage Map in Appendix B.

2. **TOPOGRAPHY.** The drainage area is located on alluvial fill with natural land sloping from 12 to 44 feet per mile in a southwesterly direction. There is a major wash, Upper East Fork Channel, on the western edge and outside of the project drainage area. The major portion of the contributing drainage area is single family residential on 1/4-acre lots. The remaining portion of the area is commercial. Previous studies have used an average SCS runoff curve number of CN = 83. This compares well with the guidelines in TR-55 and, therefore, will be used for this study.

3. **SOILS.** A soils investigation was conducted by Speedie and Associates, Inc. Soil boring samples were taken along the proposed alignment at a 1,000 foot interval and 20 feet deep. The preliminary results generally indicate that there is a gravelly sand layer between 12 and 20 feet below ground with sandy clay layers from 0 to 12 feet. The gravelly sand layer is subject to caving during excavation. This may require shoring for rigid pre-cast conduits and may cause difficult construction for cast in place conduits. See the soils logs in Appendix A.

4. **UTILITY CONFLICTS.** There is one major utility conflict located at the beginning of the project near Cave Creek Road. Approximately 200 feet of existing 8 inch sanitary sewer line will need to be relocated. There are two water lines and one sewer line located in Grovers Avenue that will effect where the storm drain can be located. There is a 36 inch water transmission main located 16 feet south of the monument line, an 8 inch water line located 6 feet north of the monument line, and an 8 inch sewer line located 16 feet north of the monument line. There are no sewer lines crossing Grovers Avenue. See the typical sections in Figure 1. The two water lines are connected in several places along the alignment but are shallow enough to cross over the proposed storm drain. They will need to be identified in the construction documents for the contractor to protect during installation of the storm drain pipe. The most controlling utility will be the sewer lines in 26th Street, 28th Street, 29th Street, and 30th Way. The proposed inlet connector pipes must cross these existing lines. As long as the storm drain line is kept deeper than these existing sewer lines there will be no conflict.

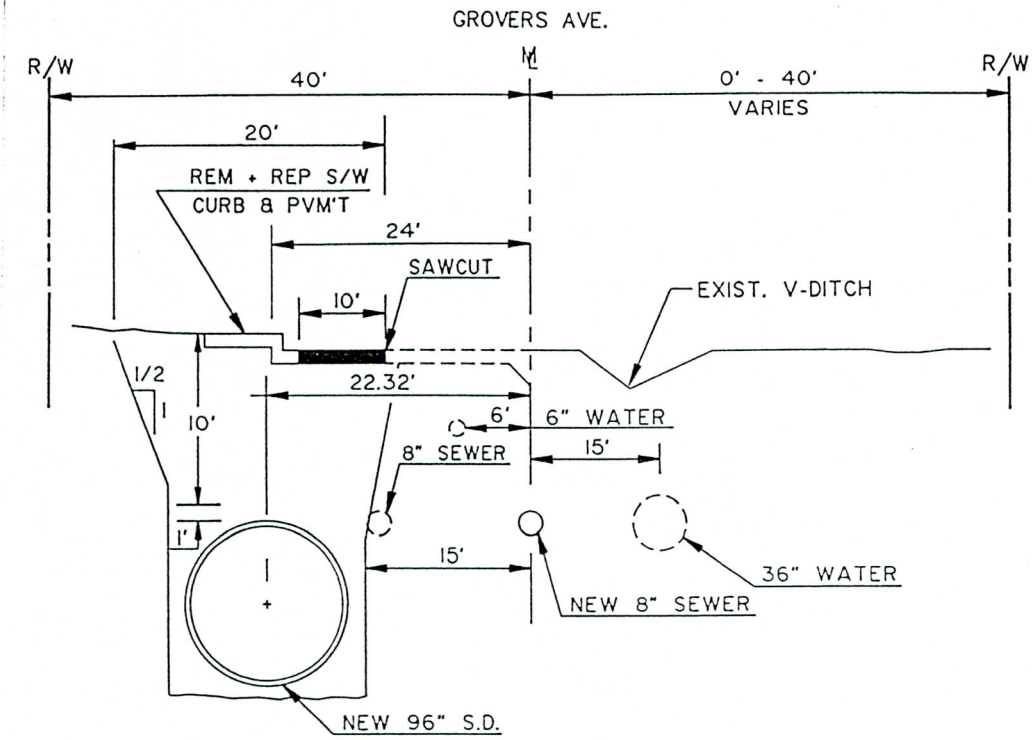

TYPICAL SECTION
STA. 1+50

From Sta ? to Sta ?

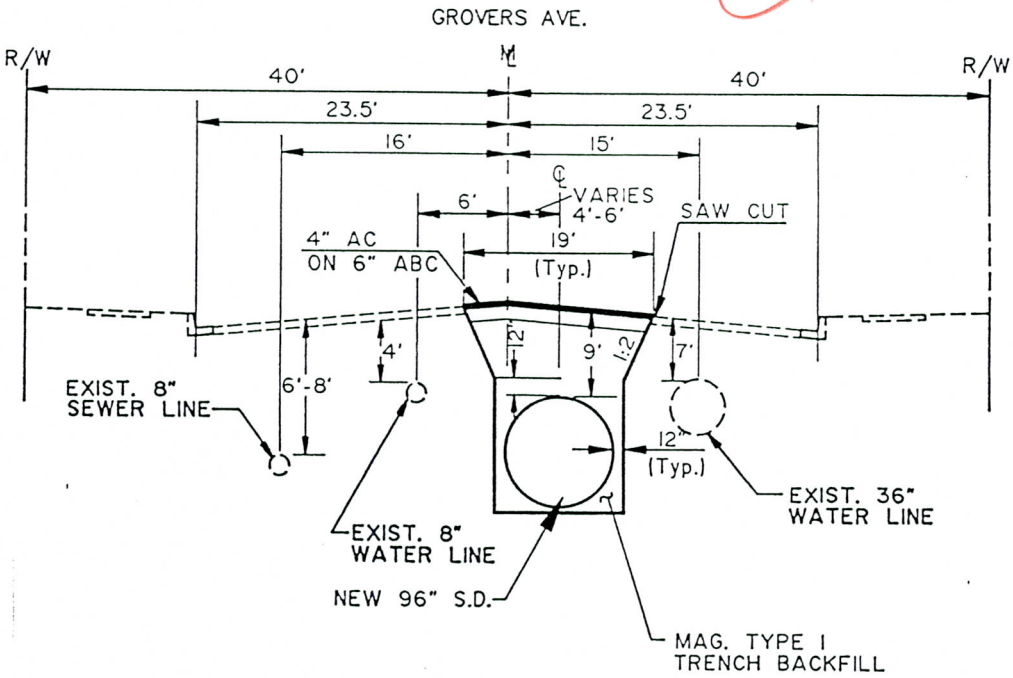

TYPICAL SECTION

From Sta ? to Sta ?

Figure 1

5. **RIGHT OF WAY AND EASEMENTS.** There is adequate right-of-way throughout the alignment except between Sta. 3 + 26.39 and Sta. 6+30.30. (See the Right-of-Way Map in Appendix D.) There is private property with two residential units located on the north side of the monument line and a 25 foot water line easement on private property on the south side of the monument line. Even though the storm drain line will begin its alignment 23 feet north of the monument line at Cave Creek Road it will need to be on the south side of the monument line between 26th Street and 30th Way in order to avoid a conflict with the existing sewer line in Grovers Avenue. Two alternative alignments are possible. The first alignment would require a 25 foot easement on the north side of the street through the Contention Mining Claim parcel. The second alignment would require a joint drainage and water easement on the south side of the street and a 500 foot x 25 foot temporary construction easement on the north side of the street. It is recommended that the FCDMC obtain permission from the City of Phoenix Water Department for the storm drain to be located in the water easement 6 feet south of the monument line and obtain a 25 foot TCE from the Contention Mining Claim Parcel.

6. **PRIVATE AND PUBLIC ACCESS.** There are individual residential properties fronting on Grovers Avenue along the north side of the street from 25th Street to 28th Street and on the south side of the street from 28th Street to 32nd Street. There are two schools along the alignment. Campo Bello School is located on the south side of the street from 26th Street to 27th Street. And, Val Vista School is located on the north side of the street from 28th Street to 29th Street. Access will need to be provided for these properties during construction. Special provisions should be made for peak hour access for the two schools in the morning and the afternoon. The bus stop area for both schools are close to the proposed work site. The contractor will need to stop work activity and provide an adequate area for the school buses to turn around in these two areas. It is recommended that the FCDMC contact the two schools to determine any other special provisions that may be needed. The special provisions should also include adequate barricades, fencing, and warning signs. The length of open trench may also need to be restricted to 300 or 400 feet in order to minimize the construction hazard and maximize local access.

D. HYDROLOGY

1. **DRAINAGE MAP.** A drainage map was prepared and the water shed drainage boundary delineated. (See the Drainage Map in Appendix B.) According to the results of previous studies, the area north of Utopia and east of 32nd Street will be controlled and will not contribute runoff to the Grovers Avenue Storm Drain. Union Hills Drive will intercept the upstream area and convey the flow west to the Upper East Fork Channel. Intersecting streets at 30th Way, 29th Street, 28th Street, and 26th Street are higher in elevation than Union Hills Drive. However, it is possible that some water will spill into these intersecting streets and contribute to the runoff to Grovers Avenue. Field data was collected and discharge rating curves were developed for concentration points 1 thru 5 in order to estimate the split flow (diversion) at these points. Results indicate that a negligible amount of water will spill into these streets and contribute runoff to Grovers Avenue. No water will spill into 26th Street which is approximately 2 feet above Union Hills Drive. Split flows were also approximated at points 13 and 14. DR. ?

There are two existing retention basins located at points 9 and 10 on Michigan Street. The elevation-storage-discharge curves were developed for these two basins and included in the analysis. The results indicate that these two basins have no effect on reducing the peak flow runoff to Grovers Avenue.

While there is a small amount of retention around the Val Vista School buildings at 28th Street, there is no retention in the field area. Therefore the affects of these retention basins were assumed negligible and were not included in the analysis. Storm water runoff is concentrated on the east side of the school and conveyed by concrete lined rectangular channel to below ground dual pipe drain system to the west side of the school. Water flows out of the pipes towards the drop off area and 28th Street where it is combined with flows from north of 28th Street. Water then travels to the 28th Street intersection and then south to Bell Road. Approximately 46 percent of the drainage area runoff is concentrated at the 28th Street intersection.

is this correct ?
is this correct ?

2. **STORM FREQUENCY AND DISTRIBUTION.** The storm distribution used for this study was the 100 year-24 hour storm input directly from the TR-20 program data used in the Upper East Fork Cave Creek Detention Area Sizing Study; Flood Control District of Maricopa County and City of Phoenix; NBS/Lowry; February 27, 1989. The original TR-20 model used a 29 minute time interval to describe the distribution for a point rainfall of P_{100} = 4.04 inches. The HEC-1 model developed for this study used a computation interval of 5 minutes.

3. **LAG TIME.** The lag time was estimated using the procedure specified in Chapter 5 of the Hydrology Manual, Volume I; Flood Control District of Maricopa County; June 1, 1992. The total cumulative runoff of 2.32 inches was computed and the peak rainfall excess was identified between the time interval of 11.755 and 13.714 hours. The incremental excess was then rank ordered in decreasing average excess rainfall intensity and a curve of intensity vs. time of concentration prepared for use in determining the lag time for each basin. Average velocities ranged from 0.9 to 3.8 feet per second and times of concentration ranged from 0.151 to 0.420 hours (9 to 25 minutes). (See Appendix A for calculations.) These velocities are greater and the lag times shorter than those used in the original TR-20 model but are more realistic. Thus, the HEC-1 model developed for this study is expected to give higher peak flows than the previous study.

4. **RUNOFF.** The HEC-1, Version 4.0, U.S. Army Corps of Engineers, September 1990, was used to compute the peak flow storm water runoff to the Grovers Avenue Storm Drain. The computer input and output data is located in Appendix A. Reach routing between sub-basins was modeled using the kinematic wave method for a rectangular section having a bottom width equal to the street right-of-way width (usually 50 feet). The results indicate that in all cases the travel time is much shorter than the computation interval. This renders the kinematic wave and other reach routing methods (such as the Muskingum-Cunge method) unnecessary. Deleting the reach routing from the network logic will not affect the peak flow. Table 1 below summarizes the peak design flows to be used in design of the Grovers Avenue Storm Drain Lateral and compares them with those computed from previous studies.

Table 1. Peak Design Flows (cfs)

Point	Location	Structure	Design	Master	TR-20	K-H
15	30th Way	Inlet	81	142	na	na
18	Grovers Ave.	Pipe	84	na	na	na
17	29th Street	Inlet	15	na	na	na
19	Grovers Ave.	Pipe	103	na	na	na
12	28th Street	Inlet	245	282	282	na
20	Grovers Ave.	Pipe	350	na	na	na
16	26th Street	Inlet	139	376	na	na
21	Grovers Ave.	Pipe	503	na	na	na
22	Basin #3	Outlet	513	483	483	656

E. LATERAL DESIGN

1. **DESIGN CRITERIA.** The design criteria recommended in Table 2 for use on the Grovers Avenue Storm Drain lateral is appropriate for a large diameter pipe designed to intercept and convey the runoff from the 100-year storm to Detention Basin #3. Criteria for maximum spread and dry traffic lane criteria is not applicable. Inlets have been designed to intercept all of the inflow. There would still probably be some water that would flow by these inlets. Therefore, we recommend that 2 inlets be located in Grovers Avenue to intercept this potential flow-by. Design criteria has been adopted from the Storm Drain Design Manual; City of Phoenix; the Hydraulic Design Manual, Volume II; Flood Control District of Maricopa County, September 1, 1992; and Drainage of Highway Pavements, HEC-12; Federal Highway Administration, March 1984.

Table 2. Design Criteria

Description	Value	Unit
Maximum Manhole Spacing	600	feet
Minimum Ground Cover on Pipe	5	feet
Minimum Ground Cover on HGL	3	feet
HGL - Crown	Positive	
Minimum Pipe Slope	0.001	ft/ft
Minimum Pipe Diameter	24	inch
Minimum Pipe Velocity	2.5	fps
Minimum Clearance Between Utilities	2	feet
Minimum Freeboard Depth in Inlets	0.5	feet
Clogging Factor for Inlets on Grade	0.8	
Clogging Factor for Inlets in Sump	0.5	
N-Values:		
Reinforced Concrete Pipe Manning N =	0.012	
Corrugated Metal Pipe N Value	0.024	
Cast in Place Concrete Pipe N	0.015	
Concrete Box Conduit	0.012	
Expansion (Exit) Loss Coefficient	1.0	
Contraction (Entrance) Loss Coefficient	0.5	

2. **CONSTRAINTS.** There are five physical constraints that affect the alignment of Grovers Avenue Storm Drain Lateral:

as built is Corrugated metal Pipe.

a. The Grovers Avenue Storm Drain Lateral must connect to the existing 113 inch x 72 inch elliptical concrete pipe located 65 feet east of Cave Creek Road, 23 feet north of Grovers Avenue, and 20 feet below ground.

b. Construction of the Grovers Avenue Storm Drain Lateral cannot disturb in any way the 36 inch water transmission line located 16 feet south of Grovers Avenue.

c. Construction of the Grovers Avenue Storm Drain Lateral cannot disturb in any way the 8 inch water distribution line located 6 feet north of Grovers Avenue.

d. Construction of the Grovers Avenue Storm Drain Lateral cannot disturb in any way the 8 inch sanitary sewer line located 16 feet north of Grovers Avenue between 26th Street and 30th Way.

e. The storm drain must be deep enough so that the connector pipes for the inlets proposed at 26th Street, 28th Street, 29th Street, and 30th Way can be installed below the existing 8 inch sewer lines in those respective streets.

3. **ALIGNMENT.** The recommended storm drain alignment is illustrated on the Hydraulic Profile Maps in Appendix C. The drain line begins at the existing pipe outlet 65 feet east of Cave Creek Road and 23 feet north of Grovers Avenue. There is a short segment of 8 inch sanitary sewer line (approximately 200 feet) that presents a horizontal conflict with the storm drain. The sewer line will need to be relocated south of Grovers Avenue to eliminate this conflict. After the storm drain passes 24th Street, the alignment will transition to 6 feet south of the monument line. This will enable the storm drain to be constructed in the existing 25 foot water easement without acquiring right-of-way acquisition from the Contention Mining Claim. As soon as the storm drain passes the Contention Mining Claim it will make another transition to 4 feet south of the monument line. This is the City of Phoenix standard location for storm drain lines. The storm drain will remain on this alignment for the remaining distance to 30th Way. Typical sections have been prepared showing the proximity of the storm drain to existing utilities and the trench excavation limits. These are illustrated on the Hydraulic Profile Map.

4. **CONFIGURATION.** The storm drain has been configured to be as shallow and as small as possible within the constraints and design criteria specified in this report. Preliminary cost analysis described later in this report indicates that reinforced concrete pipe will be the preferred pipe to use in design. Therefore, the configuration shown is valid for reinforced concrete pipe only. This does not exclude other pipes if they are more cost effective at the time of bidding. The configuration will, however, need to change if a different pipe is selected.

5. **JUNCTION STRUCTURE.** A special cast in place concrete junction box , 12x12x16 feet, will be needed in order to make the connection/transition from the elliptical pipe to round pipe at the beginning of the project. (See Figure 2 for details.) A second junction box, 10x10x10 feet will also be needed at 28th Street for the 84" x 84" RCP Tee connection.

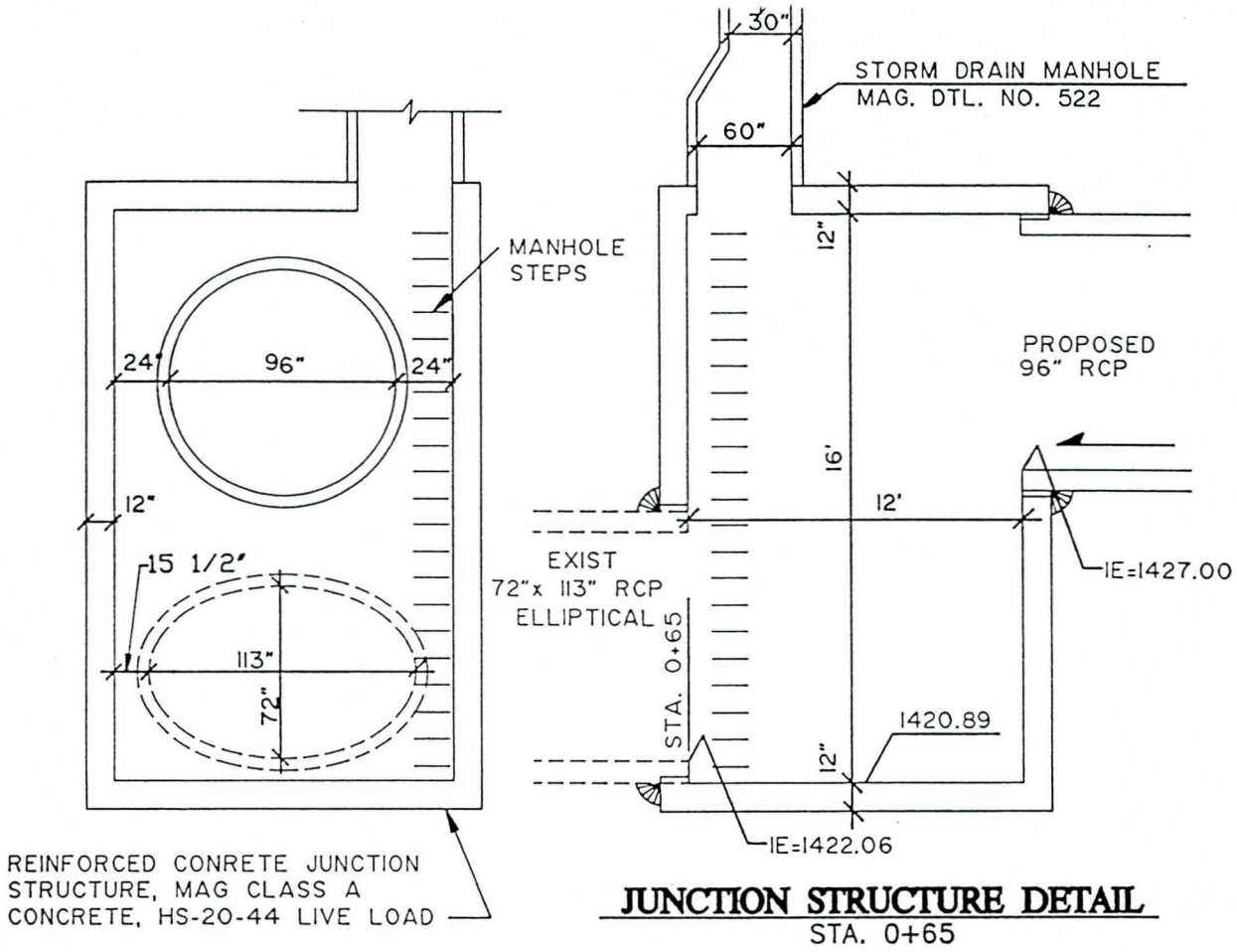
30"
STORM DRAIN MANHOLE
MAG. DTL. NO. 522
60"
12"
MANHOLE
STEPS
24"
96"
24"
PROPOSED
96" RCP
16'
12"
12'
15 1/2"
EXIST
72"x 113" RCP
ELLIPTICAL
IE=1427.00
113"
72"
STA. 0+65
1420.89
12"
IE=1422.06
REINFORCED CONRETE JUNCTION
STRUCTURE, MAG CLASS A
CONCRETE, HS-20-44 LIVE LOAD
JUNCTION STRUCTURE DETAIL
STA. 0+65

Figure 2

6. **INLET LOCATIONS.** Inlets were located to intercept all of the storm water flow from the 100 year storm before it entered Grovers Avenue. This required locating inlets on both sides of the intersecting streets; 26th Street, 28th Street, 29th Street, and 30th Way. Curb drop inlets were located starting at the curb return and were extended upstream. Grated drop inlets were located between curb returns to capture the flow-by from the curb drop inlets. See Figure 3 for details. The curb inlets function hydraulically as side flow spillways for orifice and weir flow depending on the depth of flow in the street. Water interception and flow profiles were computed using the direct step method for a steady state gradually varied flow condition. The grated inlets were sized for sump condition for weir flow condition. Table 3 below summarizes the results. The flow shown in the table is the approach flow in the street to both of the curb drop inlets. The depth is measured from the gutter line. And, the length is the minimum length of each inlet. The sump depth is the ponding depth above the grated drop inlet located between the curb returns. The grated inlet flow is the flow-by from the curb inlets that is intercepted by the grated inlet. Inlet connector pipes were also sized for a 36 inch maximum diameter and 55 cfs maximum allowable flow per individual inlet. Individual inlet lengths must total the design length shown in Table 3 without exceeding the 55 cfs per inlet. (See Appendix A for detailed calculations.)

Table 3. Inlet Design Summary

Point	Location	Structure	Flow (cfs)	Depth (feet)	Length (feet)	Sump (feet)
15	30th Way	Curb Inlets	81	0.77	49	na
		Grated Inlet	14	0.30	28	0.3
17	29th Street	Curb Inlets	15	0.35	20	na
12	28th Street	Curb Inlets	245	1.15	93	na
		Grated Inlet	35	0.40	36	0.5
16	26th Street	Curb Inlets	139	0.93	57	na
		Grated Inlet	33	0.40	36	0.5

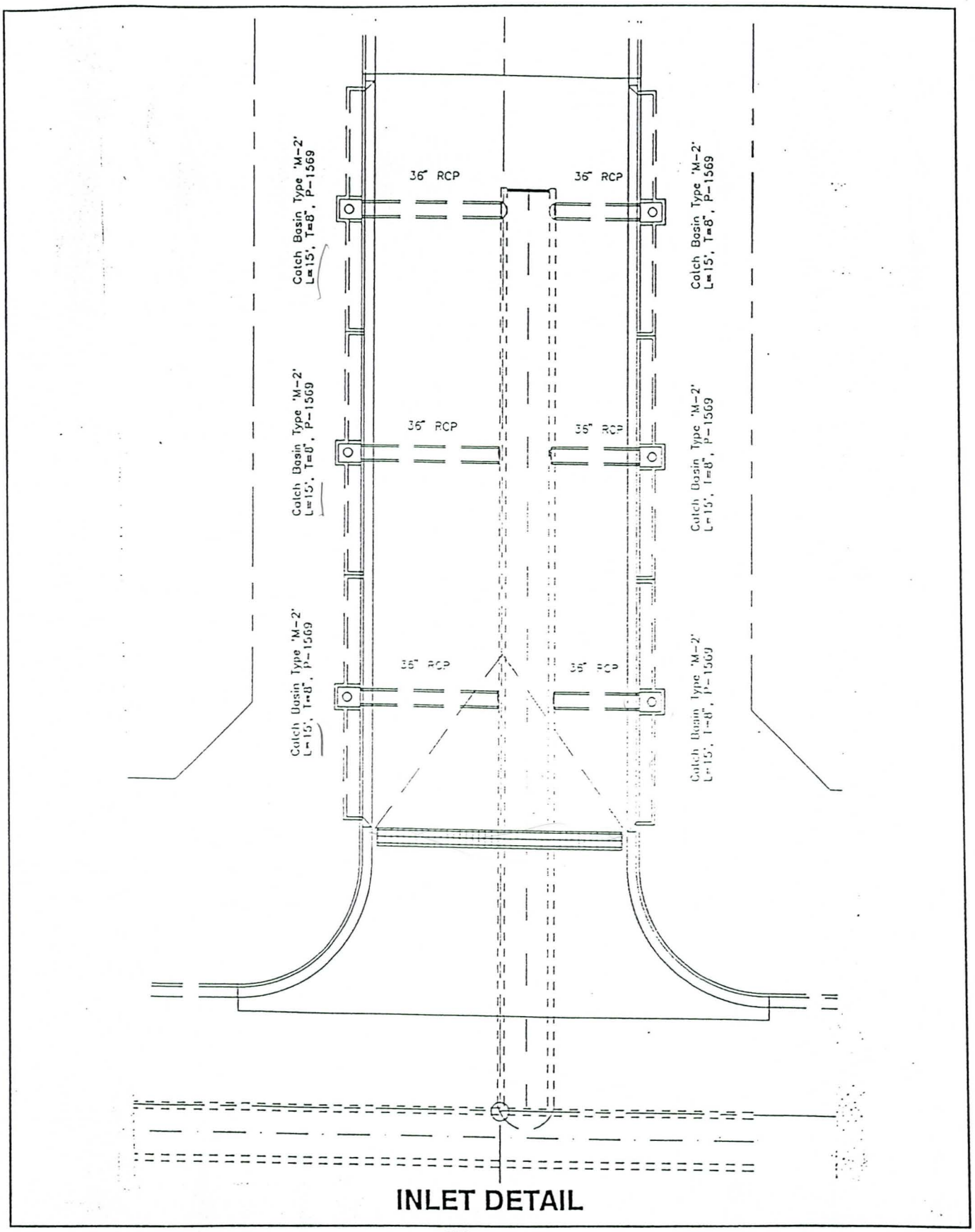
Catch Basin Type 'M-2'
L=15', T=8", P-1569
36" RCP
36" RCP
Catch Basin Type 'M-2'
L=15', T=8", P-1569
Catch Basin Type 'M-2'
L=15', T=8", P-1569
36" RCP
36" RCP
Catch Basin Type 'M-2'
L=15', T=8", P-1569
Catch Basin Type 'M-2'
L=15', T=8", P-1569
36" RCP
36" RCP
Catch Basin Type 'M-2'
L=15', T=8", P-1569
INLET DETAIL

Figure 3

7. **MAINTENANCE.** The City of Phoenix, under provisions within the Intergovernmental Agreement, will assume maintenance of the storm drain after construction, and after the project has been accepted by the City of Phoenix.

Maintenance of the storm drain will require periodic inspection of the system. Manholes have been provided at approximately 600 foot intervals for this purpose. Access is also available through catch basin lids and grate inlets so that the entire system is made available.

Inspections will identify items to be addressed through maintenance procedures. This may entail cleaning debris from grates, sediment from pipes, removing unwanted trash from catch basins and patching concrete.

This system will minimize maintenance needs through the use of materials with known performance records, i.e., RCP, and by using appropriate design engineering to reduce clogging and deposition of sediment.

8. **VALUE ENGINEERING.** Value Engineering has been applied to the storm drain design by investigating the cost of utilizing various materials and configurations, and performing preliminary storm drain designs to size the various hydraulic conduits. Each of these alternatives were estimated for storm drain mainline construction cost, and the low cost alternative recommended for design. Construction costs have been estimated from current City of Phoenix bid tabulations for 9th Street Storm Drain and 20th Street Storm Drain, material cost information from HYDROCONDUIT, and discussions with contractors. Unit costs have been modified based on the results of the soils borings indicating a loose sand-gravel layer, and the depth of the trench.

The three configurations investigated are Reinforced Concrete Pipe (RCP), Cast-In-Place Pipe (CIPP), and pre-cast Concrete Box Culverts (CBC). The hydraulic calculations and cost estimates are included in the Appendix. Below is a discussion on each alternative.

a. Reinforced Concrete Pipe (RCP): RCP is the recommended alternative based on a cost of $1,550,390. The design incudes a junction structure at the beginning of the project and another at the 28th Street lateral connection. RCP pipe sizes range from 96" to 24". Pre-cast manhole sections, tee's and reducers are utilized.

b. Cast-In-Place Pipe (CIPP): CIPP is the next alternative at a cost of $1,867,200. The design includes a cast-in-place pipe transition at the beginning of the project to tie into the existing 72" x 113" RCP. All other transitions and junctions are also cast-in-place. The cast-in-place pipe ranges from 96" to 36". Due to sandy soil conditions identified in soils borings, trench sloughing is anticipated, which will

affect CIPP construction, additional requirements for additional time and materials to the project cost. CIPP would be an acceptable alternate to RCP as long as all extra costs are accepted by the Contractor.

c. Pre-cast Concrete Box Culverts (CBC): CBC is the last alternative at $1,856,640. Although box culverts are hydraulically efficient, the manufacturing cost makes it an unsuitable candidate for this project. The design includes a junction structure at the beginning of the project and includes CBC sizes ranging from 7 ft. x 7 ft. to 4 ft. x 4 ft. RCP was utilized for conduit smaller than 4 feet in diameter.

Other factors which have been considered in the Value Engineering recommendation for RCP are: construction time, safety, access and disruption to traffic. Since RCP is easily installed and the trench can be immediately backfilled, all of the above factors are positively affected. RCP is a proven material and is accepted as a standard of the industry. MAG and City of Phoenix standards both accept RCP. On this project, the City of Phoenix Standards will be followed.

F. DESIGN REVIEWS AND PERMITS

1. **CITY OF PHOENIX.** The COP will perform reviews of the Design Concept Report and Construction Plans at each submittal phase. The City's requirements consist of receiving one (1) set of documents at the preliminary phases and two (2) sets of documents at the final design completion. Submittals are directed to be made to:

Ralph Goodall
City of Phoenix
1034 East Madison
Phoenix, AZ 85003

Permits to perform construction within City of Phoenix Right-of-way will be required. The Contractor will be required to obtain this permit prior to commencing construction.

2. **UTILITY COMPANIES.** The FCDMC will perform formal utility coordination for this project. Water main and sewer main relocation plans will be submitted to the FCDMC at each design phase for utility company review. Final plans for approval will be submitted at design completion.

Design coordination of water and wastewater relocation plans will be performed during each design phase by MM/CSSA to assure compliance with COP utility company requirements.

The COP, through an Intergovernmental Agreement with Maricopa County Department of Environmental Management (MCDEM), has authority for water and wastewater plan review and approval within the COP.

3. **MARICOPA COUNTY DEPARTMENT OF ENVIRONMENTAL MANAGEMENT.** A construction permit will be required for dust abatement from the MCDEM. The Contractor will be required to secure this permit prior to construction.

Wastewater relocation plans will be submitted to the COP for design approval. Through an IGA, the COP has jurisdiction over the sanitary sewer system within the City.

4. **STORM WATER POLLUTION PREVENTION PLAN.** A Stormwater Pollution Prevention Plan for stormwater discharge from construction sites is required under the terms and conditions of the general National Pollutant Discharge Elimination System (NPDES) permit. The Contractor and Resident Engineer are required to certify the plan.

The plan is to include project information, hydrologic information and construction information. Specific items to be addressed in the plan are erosion control measures, sediment control measures, hazardous materials spills, project inspections and general construction practices (housekeeping).

The control of sediment from leaving the site is of primary importance. The Stormwater Pollution Prevention Plan needs to address the Contractor's stockpiles of trench excavation materials. Sediment and erosion can be controlled by utilizing silt fences and hay bales along with berms. Sediment should not be allowed to impact Retention Basin No. 3.

After the plan has been prepared, a Notice of Intent (NOI) needs to be submitted to the EPA. A copy of the plan needs to be kept on site at all times during construction. The Contractor and Resident Engineer are both responsible for compliance with the NPDES.

5. **SCHOOLS.** Two (2) schools are located adjacent to the project. Campo Bello School is located on the south side of Grovers Avenue, west of 27th Street. Val Vista School is located on the north side of Grovers Avenue, east of 28th Street. No formal reviews or permits are required from the schools at this time.

Both schools will be impacted during the construction of the storm drain. The impacts will consist of reduced access, increase noise, dust and hazard. Benefits consist of improved drainage and access after construction.

Several actions are recommended to be taken during design and construction of the storm drain to minimize impacts to the schools. The following can be implemented to mitigate these impacts:

a. During design, locate major items like manholes away from heavily used areas, such as driveways and drop-off zones, to minimize disruption to access.

b. Provide an Access Control Plan as part of the construction documents.

Need Trefic Design Plan

c. Require the Contractor to avoid work adjacent to the schools during sensitive times, such as beginning and end of school, lunch, recess, and scheduled school functions.

Need Trefic Design Plan

d. Coordinate with the schools during design to discuss concerns and mitigation.

e. Require the Contractor to keep the schools informed of construction schedule.

f. Require the Contractor to hold a safety meeting with the school to discuss the project, associated construction hazards and safety.

g. Throughout the project, require the Contractor to fence off any open trenches or other potential hazards such as vacant equipment when not in use, and post watchmen during off-hours.

The cost of these actions are minimal but will help mitigate concerns of the schools and increase project safety. Mitigation should begin during the design phase with notification to the schools of the upcoming storm drain project.

G. CONSTRUCTION

1. **PHASING.** Construction phasing and sequencing is utilized to construct portions of the same project at different times. Justification for phasing can be weather or construction season, cost or fiscal year programming of funds, site conditions, such as access or traffic requirements, and constructibility. For example, utilities could be relocated prior to installing the storm drain.

On the Grovers Avenue Storm Drain project, there is no need for special phasing. On a day-to-day basis, the Contractor will be required to sequence his activities to provide access to adjacent properties and maintain thru-traffic. This will entail stockpiling trench excavation in an off-site location instead of beside the trench in the roadway, and providing temporary access to schools and residences when driveways are blocked by construction. These activities are normally identified by the individual contractor at the pre-construction conference.

Related to phasing is Construction Progression. On a drainage project, the standard progression is to construct the downstream conduit end first and progress upstream. This ensures that if water impacts the trench, the pipe is open to drain the trench. It also allows those portions of the system already constructed to function immediately upon completion.

This project will follow typical practices and should be constructed from the downstream and progressing upstream.

2. **DURATION AND SCHEDULE.** The project consists of installing storm drains, manholes, catch basin inlets, sanitary sewer relocation, miscellaneous water service relocations, and trench backfill and paving. We estimate 120 calendar days for construction, based on the following schedule:

(working days)

Mobilization	5 Days	=	1	Week
Sewer Relocation	5 Days	=	1	Week
Junction Structure	10 Days	=	2	Weeks
Install Storm Drain	30 Days	=	6	Weeks
Construct Manholes	10 Days	=	2	Weeks
Construct Catch Basins	20 Days	=	4	Weeks
Punch List	5 Days	=	1	Week
			17	Weeks
		x	7	Days
			119	Days

- Holiday, etc
- Rainy days

?

This schedule is commensurate to the 9th Street Storm Drain Project recently completed by the City of Phoenix under similar conditions.

3. **HAZARDOUS MATERIALS.** During the field review, the project site was observed for evidence of underground storage tanks (UST) and surface waste material. No testing or sampling was performed, all observation was visual. No hazardous material is apparent on the project.

During construction some hazardous materials are utilized or the project. Fuels, solvents, adhesives, paints and ignitable wastes are typical on most construction projects. The Contractor is responsible for those hazardous waste materials he generates. To maintain the site from any accidental contamination, the Contractor will be required to clean up any spilled oil or liquid, maintain a berm around any fuel storage or long-term equipment storage area and comply with EPA and 40 CFR regulations.

4. **COST.** It is recommended that the project be bid using a RCP storm drain system, with CIPP and CBC as pipe alternatives. The Engineer's opinion of probable construction cost for RCP is $1,550,390.

H. CONCLUSION

The results and recommendations of this report should be reviewed by the FCDMC and the COP and comments incorporated with the Final Design Concept Report to be use as a basis for preparing the Initial Plans (30%-Submittal).

REFERENCES

1. AGK Engineers; Drainage Area Map for Bell Road, 20th Street to 32nd Street; MCDEM Project No. 68544; June 13, 1991.

2. AMWEST Engineering Company, Inc; Hydraulic Report for the Cave Creek Wash from 11th Avenue to Tierra Buena; April, 1988.

3. Burgess and Niple, Inc.; Cave Creek Floodplain Delineation, Cave Buttes Dam to the Arizona Canal Diversion Channel, Final Hydrology Report; FCDMC; Project No. FCD 88-56; January, 1990.

4. Cella Barr Associates; North Central Area Master Storm Drainage Study (East Half); City of Phoenix; Project No. ST-79190-01; April, 1981.

5. Cella Barr Associates; Moon Valley Storm Drainage Study; City of Phoenix; Project No. ST-79190.01; April, 1982.

6. City of Phoenix, Engineering Department; Storm Drainage Design Manual, Subdivision Drainage Design; September, 1985.

7. City of Phoenix, Engineering Department; Storm Drainage Design Manual, Storm Drains with Paving of Major Streets; August, 1975; Revised July, 1987.

8. City of Phoenix Planning Department; General Plan for Phoenix, 1985-2000; October, 1985; Revised July, 1989.

9. Coe and Van Loo Consulting Engineers, Inc.; Hydrology Report, Skunk Creek Between Arizona Canal Diversion Channel & Central Arizona Project; November 9, 1990.

10. CRS Sirrine, Inc.; Revised Concept Drainage Design Hydrology, I-17 to Cave Creek, Outer Loop Highway; November 4, 1988.

11. CRS Sirrine, Inc.; Final Drainage Report, Outer Loop Highway Section 6, (OLH/I-17 Interchange) Phase II; ADOT; Project No. RBM-600-0-306; July, 1989.

12. Deleuw, Cather and Company; Drainage Report, Scatter Wash Hydrology and Outer Loop Highway Interceptor Drain, 39th Avenue to 7th Street; November, 1989.

13. Deleuw, Cather and Company; Interoffice Correspondence, Revised Hydrology and Drainage Concepts for Section 7; October 4, 1990.

14. Entranco Engineers, Inc.; Drainage Map for Bell Road, 19th Avenue to 7th Street; City of Phoenix, Project No. P-860932; August 14, 1989.

15. Federal Emergency Management Agency; Flood Insurance Study for Maricopa County, Arizona and Incorporated Areas; Revised September 20, 1989.

16. Flood Control District of Maricopa County; Uniform Drainage Policies and Standards for Maricopa County, Arizona; February 25, 1987.

17. Flood Control District of Maricopa County; Drainage Design Manual for Maricopa County, Arizona, Volume I, Hydrology; June, 1992.

18. Floyd M. Whitmore Engineers, Inc.; Catch Basin and Storm Sewer Design, 7th Street - Thunderbird Road to Bell Road; City of Phoenix, Project No.: P-856013; May, 1989.

19. George V. Sabol Consulting Engineer; Flood Control District of Maricopa County, S-Graph Study, FCDMC; Project No. FCD 86-36; November, 1987.

20. Greiner Engineering Sciences, Inc.; Outer Loop Highway, Bell Road to C.A.P. Canal Crossing Section B, Hydrology Report; August, 1986.

21. Greiner Engineering Sciences, Inc.; Bell Road Project Drainage Study, October, 1987.

22. Greiner Engineering Sciences, Inc.; Concept Drainage Design Report from Cave Creek to the CAP Canal, Outer Loop Highway; October, 1987.

23. Greiner Engineering Sciences, Inc.; Scatter Wash Drainage and Storm Drain Study Conceptual Plan, Volumes I and II; September, 1989.

24. John Carollo Engineer; Drainage Area Map for Bell Road, 7th Street to 20th Street; City of Phoenix, Project No. P-860981; March 8, 1991.

25. Kaminski-Hubbard Engineering, Inc.; Scatter Wash Watershed, Hydrology Report, Arizona Canal Diversion Channel Area; May 4, 1992.

26. NBS/Lowry Engineers and Planners; Upper East Fork Cave Creek Area Drainage Master Study; October, 1987.

27. NBS/Lowry Engineers and Planners; Upper East Fork Cave Creek Detention Area Sizing Study; February, 1989.

28. NBS/Lowry Engineers and Planners; Upper East Fork Cave Creek Detention Area Sizing Study, Engineering Design Descriptions; June, 1989.

29. NBS/Lowry Engineers and Planners; Update of North Central Area master Storm Drainage Study (East Half); City of Phoenix, Project No. ST-893248; September, 1989.

30. NBS/Lowry Engineers and Planners; Upper East Fork Cave Creek Detention Basin #4 Design, 90% Design Submittal; November 2, 1990.

31. NBS/Lowry Engineers and Planners; Construction Plans for Upper East Fork Cave Creek Drainage Channel; FCDMC; Project No. 90-54; June 24, 1991.

32. NBS/Lowry Engineers and Planners; Upper East Fork Cave Creek Detention Basin #3A and 3B Design, Preliminary Design Submittal; City of Phoenix, Project No.'s ST-896829 & P-901801; September 9, 1991.

33. PRC Engineering; I-17 Drainage Design Study Preliminary Design Report; March, 1987.

34. Project Engineering Consultants, Ltd.; Storm Drain Design for Coral Cables Drive, Moon Valley Drive, Carol Ann Way and Country Gables Drive; City of Phoenix, Project No. ST-856500; February, 1989.

35. Robert L. Ward Consulting Engineer; Memorandum, Offsite Drainage Channel,Outer Loop Highway, 7th Street to 1/4 Miles West of 20th Street; December 8, 1989.

36. SCI Consulting Engineers, Inc.; North Central Master Storm Drainage Study (West Half); City of Phoenix, Project No. ST-79185.01; May 15, 1981.

37. U.S. Army Corps of Engineers, Los Angeles District; Gila River Basin, New River and Phoenix City Streams, Arizona, Design Memorandum No. 2, Hydrology, Part 1; October, 1973.

38. U.S. Army Corps of Engineers, Los Angeles District; Gila River Basin, New River and Phoenix City streams, Arizona, Design Memorandum No. 3, General Design Memorandum - Phase II, Project Design Part 1, Cave Buttes Dam; July, 1976.

39. U.S. Army Corps of Engineers Los Angeles District; Gila River Basin, Phoenix streams, Arizona and Vicinity, Design Memorandum No. 2, Hydrology, Part 2; 1982.

40. U.S. Army Corps of Engineers, The Hydrologic Engineering Center; HEC-1 Flood Hydrograph Package Users Manual; September, 1990.

41. U.S. Department of Agriculture, Soil Conservation Service; Soil Survey of Maricopa County, Arizona, Central Part; April, 1986.

42. U.S. Department of Agriculture, Soil Conservation Service; Soil Survey of Aguila - Carefree Area, Part of Maricopa and Pinal Counties, Arizona; April, 1986.

43. U.S. Department of Commerce, National Oceanic and Atmospheric Administration, National Weather Service; NOAA Atlas 2, Precipitation - Frequency Atlas at the Western United States Volume VIII - Arizona; Silver Springs, MD, 1973.

44. U.S. Department of Commerce, National Oceanic and Atmospheric Administration, National Weather Service; NOAA Technical Memorandum NWS HYDRO-40, Depth-Area Ratios in the Semi-Arid Southwest United States; Silver Springs, MD, August, 1984.

45. U.S. Department of Transportation, Federal Highway Administration; Hydraulic Design of Highway Culverts, Hydraulic Design Series No. 5; September, 1985.

46. U.S. Geological Survey, Water Resources Division; Estimated Manning's Roughness Coefficients for Stream Channels and Flood Plains in Maricopa County, Arizona; April, 1991.

APPENDIX A - CALCULATIONS

APPENDIX - A

TABLE OF CONTENTS

1. Location Map 1
2. Soils Boring Logs 2
3. Rainfall Data and Analysis 7
4. Excess Rainfall Intensity Duration 11
5. Drainage Area Data 12
6. Lag Time Computations 13
7. Split Flow Analysis for Union Hills 16
8. HEC-1 Hydrologic Input/Output Results 22
9. Inlet Hydraulic Calculations 37
10. Inlet Connector Pipe Hydraulic Calculation 48
11. Catch Basin Details 49
12. Storm Drain Hydraulic Calculations 51
13. Check of Computer Code Calculations 57
14. Preliminary Construction Cost Estimates 61

FLOOD CONTROL DISTRICT OF MARICOPA COUNTY
(FCD #93-21)

GROVERS AVENUE STORM DRAIN LATERAL

LOCATION MAP

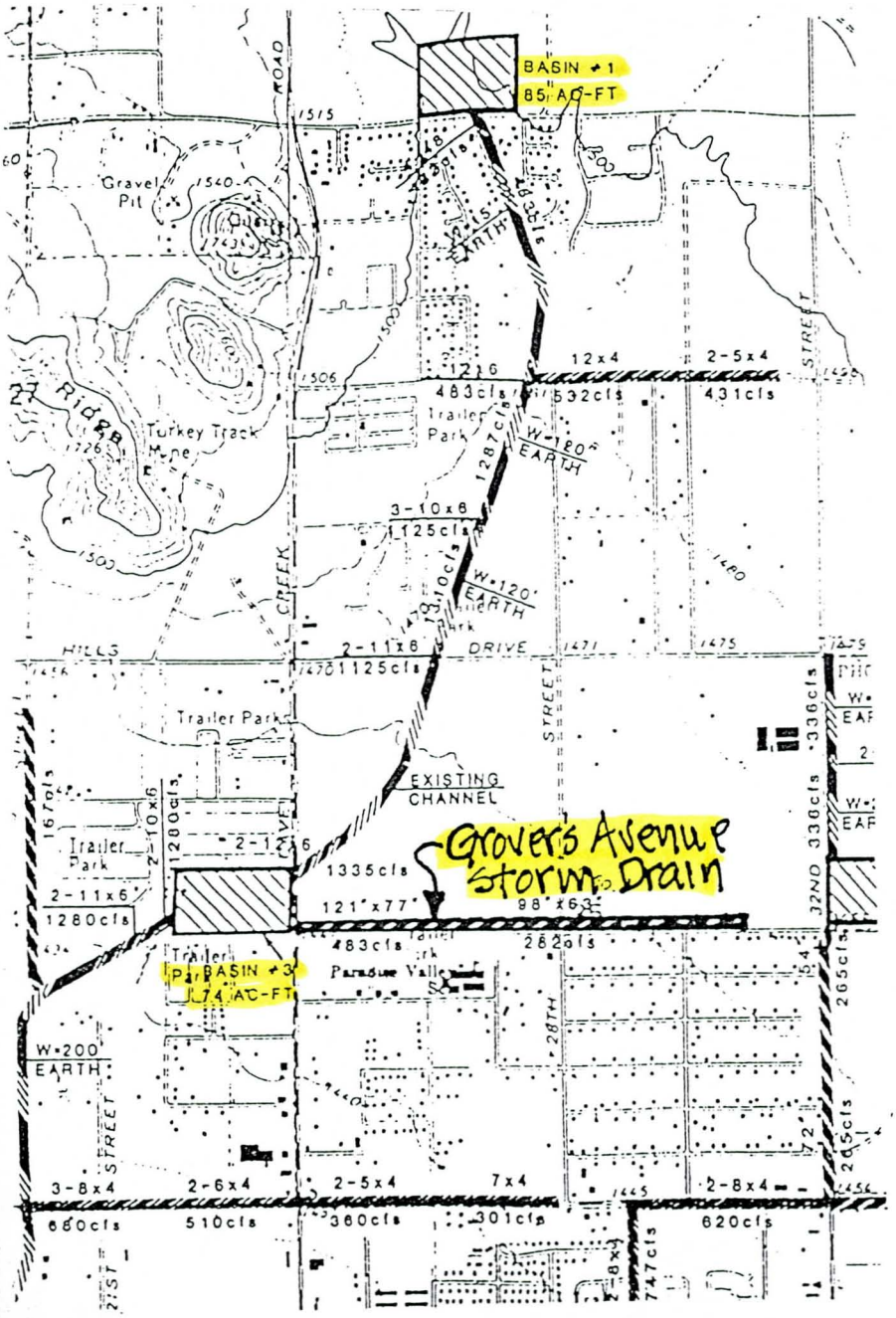

Rig Type: CME-55
Boring Type: 7" Hollow Stem Auger
Surface Elevation: N/A
STA 3 + 00, 16' RT of CL

Depth (feet)	Visual Classification	Sample Number	Depth of Sample	Natural Water Content (%)	In-place Dry Density (P.C.F.)	Penetration Resistance Blows per Foot (0 – 25 – 50)
0	Hard Mottled Light Brown/White/Grey SANDY CLAY (CL-Dry) with Weak Calcareous Cementation	RS-1	1.9	--	--	50/10"
3.5	Dense Reddish to Light Brown/Grey CLAYEY SAND (SC-Dry) with Trace Gravel and Heavy Weak to Mild Calcareous Cementation	S-2	6.0	--	--	
5						
10		S-3	11.0	--	--	
11.5	Very Dense Light Brown/Grey GRAVELLY SAND (SP-Dry) with Some Cobbles					
15	Not good for CIPP	S-4	16.0	--	--	88/12"
18.0	Very Dense Light Brown/Grey CLAYEY SAND (SC-Dry) and Gravel					
20						
21.0	End of Boring	S-5	21.0	--	--	78/12"
25						

PRELIMINARY

Boring Date: 12-16-93
Field Engineer/Technician: M. VanHook
Driller: S. Belsky
Contractor: Heber Mining

Water Level

Depth	Hour	Date

SPEEDIE AND ASSOCIATES

Log of Test Boring Number: B- 1

Grovers Storm Drain

Grovers Ave. & 32nd St. to Cave Creek

Phoenix, AZ

Project No.: 930314SA

Rig Type: CME-55
Boring Type: 7" Hollow Stem Auger
Surface Elevation: N/A
STA 12 + 00, 14' RT of CL

Depth (feet)	Visual Classification	Sample Number	Depth of Sample	Natural Water Content (%)	In-place Dry Density (P.C.F.)	Penetration Resistance Blows per Foot (0 – 25 – 50)
0	Stiff Light Brown to Brown SANDY CLAY (CL-Dry) with Weak Calcareous Cementation	S-1	2.5	--	--	
3.5	Hard Light Brown/Grey CLAY/SILTY CLAY (CL-Dry) with Weak to Mild Calcareous Cementation	BS-2	4.0	--	--	
5		S-3	6.0	--	--	67/12"
8.0	Hard Light Brown/Grey SANDY CLAY (CL-Dry) with Trace Gravel	S-4	10.0	--	--	50/6"
13.0	Dense to Very Dense Light Brown/Grey GRAVELLY SAND (GP-Dry) with Some Cobbles	S-5	16.0	--	--	
19.9	End of Boring	S-6	19.9	--	--	50/5"
20						
25						

Not good for CIPP

PRELIMINARY

Boring Date: 12-16-93
Field Engineer/Technician: M. VanHook
Driller: S. Belsky
Contractor: Heber Mining

Water Level

Depth	Hour	Date

SPEEDIE AND ASSOCIATES

Log of Test Boring Number: B- 2

Grovers Storm Drain

Grovers Ave. & 32nd St. to Cave Creek

Phoenix, AZ

Project No.: 930314SA

Rig Type: CME-55
Boring Type: 7" Hollow Stem Auger
Surface Elevation: N/A
STA 22 + 00, 2' RT of CL

Depth (feet)	Visual Classification	Sample Number	Depth of Sample	Natural Water Content (%)	In-place Dry Density (P.C.F.)	Penetration Resistance Blows per Foot
0	2" Asphalt/4" AB — Existing ~~Patt~~ Pavements					
	Very Stiff Light Brown/Grey SANDY CLAY (CL-Dry) with Weak Calcareous Cementation	S-1	2.5	--	--	
3.5	Very Stiff Light Brown to Brown SANDY SILT/SANDY CLAY (ML/CL-Dry)	S-2	6.0	--	--	
5						
8.0	Hard Mottled Brown/Grey SILTY CLAY/SANDY CLAY (CL-Dry) with Weak Calcareous Cementation and Variable Gravel	S-3	10.3	--	--	50/4"
10						
15		S-4	15.6	--	--	89/8"
19.5	End of Boring	S-5	19.5	--	--	50/0"
20						
25						

Penetration Resistance scale: 0, 25, 50

PRELIMINARY

Boring Date: 12-16-93
Field Engineer/Technician: M. VanHook
Driller: S. Belsky
Contractor: Heber Mining

Water Level

Depth	Hour	Date

SPEEDIE AND ASSOCIATES

Log of Test Boring Number: B- 3

Grovers Storm Drain

Grovers Ave. & 32nd St. to Cave Creek

Phoenix, AZ

Project No.: 930314SA

Rig Type: CME-55
Boring Type: 7" Hollow Stem Auger
Surface Elevation: N/A
STA 32 + 00, 10' RT of CL

Depth (feet) | Graphic Log | Visual Classification

0 — 1" Asphalt/0" AB
Dense to Very Dense Light to Reddish Brown CLAYEY SAND (SC-Dry) with Trace Gravel and Weak to Mild Calcareous Cementation

5

10

13.0

Very Dense Light Brown/Grey GRAVELLY SAND (GP-Dry)

15

Not good for CIPP

19.6

20 — End of Boring

25

Sample Number	Depth of Sample	Natural Water Content (%)	In-place Dry Density (P.C.F.)	Penetration Resistance Blows per Foot (0 – 25 – 50)
S-1	2.5	--	--	
S-2	6.0	--	--	
S-3	10.5	--	--	50/6"
S-4	16.0	--	--	58/12"
S-5	19.6	--	--	50/1"

PRELIMINARY

Boring Date: 12-16-93
Field Engineer/Technician: M. VanHook
Driller: S. Belsky
Contractor: Heber Mining

Water Level

Depth	Hour	Date

SPEEDIE AND ASSOCIATES

Log of Test Boring Number: B- 4

Grovers Storm Drain

Grovers Ave. & 32nd St. to Cave Creek

Phoenix, AZ

Project No.: 930314SA

Rig Type: CME-55
Boring Type: 7" Hollow Stem Auger
Surface Elevation: N/A
STA 42 + 00, 1'RT of CL

Depth (feet)	Visual Classification	Sample Number	Depth of Sample	Natural Water Content (%)	In-place Dry Density (P.C.F.)	Penetration Resistance Blows per Foot (0 – 25 – 60)
0	Very Stiff Light Brown to Brown/Grey SANDY CLAY (CL-Dry) with Heavy Variable Calcareous Cementation	RS-1	2.0			
5		S-2	5.9	--	--	89/11"
10		S-3	9.6	--	--	50/2"
15		S-4	14.8	--	--	50/4"
20	19.6 End of Boring	S-5	19.6	--	--	50/1"
25						

PRELIMINARY

Boring Date: 12-16-93
Field Engineer/Technician: M. VanHook
Driller: S. Belsky
Contractor: Heber Mining

Water Level

Depth	Hour	Date

SPEEDIE AND ASSOCIATES

Log of Test Boring Number: B- 5

Grovers Storm Drain

Grovers Ave. & 32nd St. to Cave Creek

Phoenix, AZ

Project No.: 930314SA

GROVERS AVENUE STORM DRAIN LATERAL

CN =	SCS Curve Number =	83.00	
S =	Soil moisture deficit = (1000-10*CN)/CN =	2.05	in
Ia =	Initial abstraction = .2*S =	0.41	in
P =	Rainfall =	4.04	in
Q =	Cumulative excess rainfall runoff = (p-Ia)^2/(p-Ia+s) =	2.32	in
i =	Intensity of runoff = delta(Q)/delta(t)		in/hr
D =	Duration =	24.00	hrs

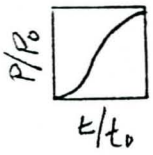

t/to	p/po	t	p	Q	delta(t)	delta(Q)
0.020	0.000	0.49	0.00	0.00		
0.041	0.004	0.98	0.02	0.00	0.49	0.00
0.061	0.008	1.47	0.03	0.00	0.49	0.00
0.082	0.013	1.96	0.05	0.00	0.49	0.00
0.102	0.018	2.45	0.07	0.00	0.49	0.00
0.122	0.022	2.94	0.09	0.00	0.49	0.00
0.143	0.026	3.43	0.11	0.00	0.49	0.00
0.163	0.031	3.92	0.13	0.00	0.49	0.00
0.184	0.035	4.41	0.14	0.00	0.49	0.00
0.204	0.040	4.90	0.16	0.00	0.49	0.00
0.224	0.044	5.39	0.18	0.00	0.49	0.00
0.245	0.048	5.88	0.19	0.00	0.49	0.00
0.265	0.053	6.37	0.21	0.00	0.49	0.00
0.286	0.057	6.86	0.23	0.00	0.49	0.00
0.306	0.062	7.35	0.25	0.00	0.49	0.00
0.327	0.066	7.84	0.27	0.00	0.49	0.00
0.347	0.071	8.33	0.29	0.00	0.49	0.00
0.367	0.075	8.82	0.30	0.00	0.49	0.00
0.388	0.080	9.31	0.32	0.00	0.49	0.00
0.408	0.093	9.80	0.38	0.00	0.49	0.00
0.429	0.107	10.29	0.43	0.00	0.49	0.00
0.449	0.120	10.78	0.48	0.00	0.49	0.00
0.469	0.140	11.27	0.57	0.01	0.49	0.01
0.490	0.170	11.76	0.69	0.03	0.49	0.02
0.510	0.500	12.24	2.02	0.71	0.49	0.68
0.531	0.830	12.73	3.35	1.74	0.49	1.03
0.551	0.860	13.22	3.47	1.84	0.49	0.10
0.571	0.880	13.71	3.56	1.91	0.49	0.07
0.592	0.893	14.20	3.61	1.95	0.49	0.04
0.612	0.907	14.69	3.66	2.00	0.49	0.05
0.633	0.920	15.18	3.72	2.04	0.49	0.04
0.653	0.924	15.67	3.73	2.06	0.49	0.01
0.673	0.928	16.16	3.75	2.07	0.49	0.01
0.694	0.933	16.65	3.77	2.09	0.49	0.02
0.714	0.937	17.14	3.79	2.10	0.49	0.01
0.735	0.942	17.63	3.81	2.12	0.49	0.02

MORRISON-MAIERLE/CSSA, INC. 06-Jan-90

GROVERS AVENUE STORM DRAIN LATERAL

0.755	0.947	18.12	3.83	2.14	0.49	0.02
0.776	0.951	18.61	3.84	2.15	0.49	0.01
0.796	0.956	19.10	3.86	2.17	0.49	0.02
0.816	0.960	19.59	3.88	2.18	0.49	0.01
0.837	0.964	20.08	3.89	2.19	0.49	0.01
0.857	0.969	20.57	3.91	2.21	0.49	0.02
0.878	0.973	21.06	3.93	2.23	0.49	0.01
0.898	0.978	21.55	3.95	2.24	0.49	0.02
0.918	0.982	22.04	3.97	2.26	0.49	0.01
0.939	0.987	22.53	3.99	2.28	0.49	0.02
0.959	0.991	23.02	4.00	2.29	0.49	0.01
0.980	0.995	23.51	4.02	2.30	0.49	0.01
1.000	1.000	24.00	4.04	2.32	0.49	0.02

Tabulate period of peak rainfall excess.

t	P	Q	delta(t)	delta(Q)
11.755	0.687	0.033		
11.878	1.020	0.140	0.122	0.107
12.000	1.353	0.298	0.122	0.158
12.122	1.687	0.490	0.122	0.193
12.245	2.020	0.709	0.122	0.218
12.367	2.353	0.946	0.122	0.238
12.490	2.687	1.199	0.122	0.252
12.612	3.020	1.463	0.122	0.264
12.735	3.353	1.736	0.122	0.273
12.857	3.384	1.761	0.122	0.025
12.980	3.414	1.786	0.122	0.025
13.102	3.444	1.812	0.122	0.025
13.224	3.474	1.837	0.122	0.025
13.347	3.495	1.854	0.122	0.017
13.469	3.515	1.871	0.122	0.017
13.592	3.535	1.888	0.122	0.017
13.714	3.555	1.905	0.122	0.017

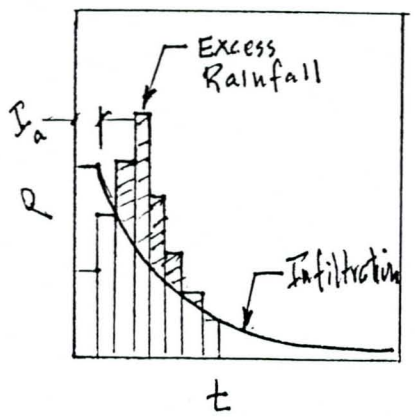

Rearrange incremental excesses in order of decreasing average intensity.

delta(t) (hrs)	delta(Q) (inches)	t (hrs)	Q (inches)	avg(i) (in/hr)	m	b
0.122	0.273	0.122	0.273	2.231	-0.309	2.231
0.122	0.264	0.245	0.537	2.193	-0.361	2.193
0.122	0.252	0.367	0.789	2.149	-0.426	2.149
0.122	0.238	0.490	1.027	2.097	-0.512	2.097
0.122	0.218	0.612	1.245	2.034	-0.626	2.034
0.122	0.193	0.735	1.438	1.957	-0.783	1.957

GROVERS AVENUE STORM DRAIN LATERAL

0.122	0.158	0.857	1.596	1.862	-1.007	1.862
0.122	0.107	0.980	1.703	1.738	-1.389	1.738
0.122	0.025	1.102	1.728	1.568	-1.112	1.568
0.122	0.025	1.224	1.753	1.432	-0.910	1.432
0.122	0.025	1.347	1.779	1.321	-0.759	1.321
0.122	0.025	1.469	1.804	1.228	-0.684	1.228
0.122	0.017	1.592	1.821	1.144	-0.586	1.144
0.122	0.017	1.714	1.838	1.072	-0.508	1.072
0.122	0.017	1.837	1.855	1.010	-0.445	1.010
0.122	0.017	1.959	1.872	0.956		

avg(i) = Average excess intensity = Q/t
i = Compute by interpolation = m t + b

GROVERS AVENUE STORM DRAIN

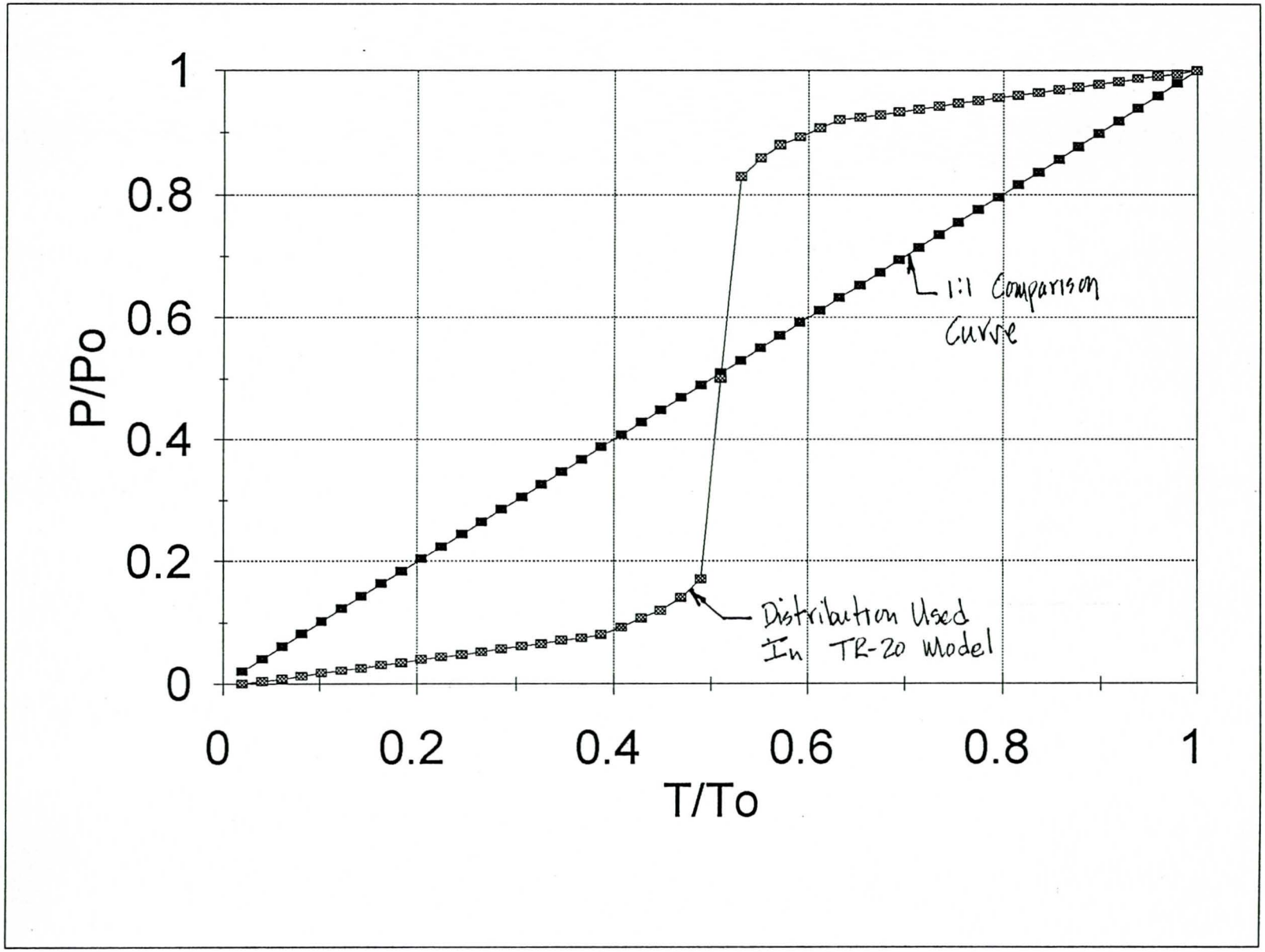

MORRISON-MAIERLE/CSSA, INC. 06-Jan-90

GROVERS AVENUE STORM DRAIN

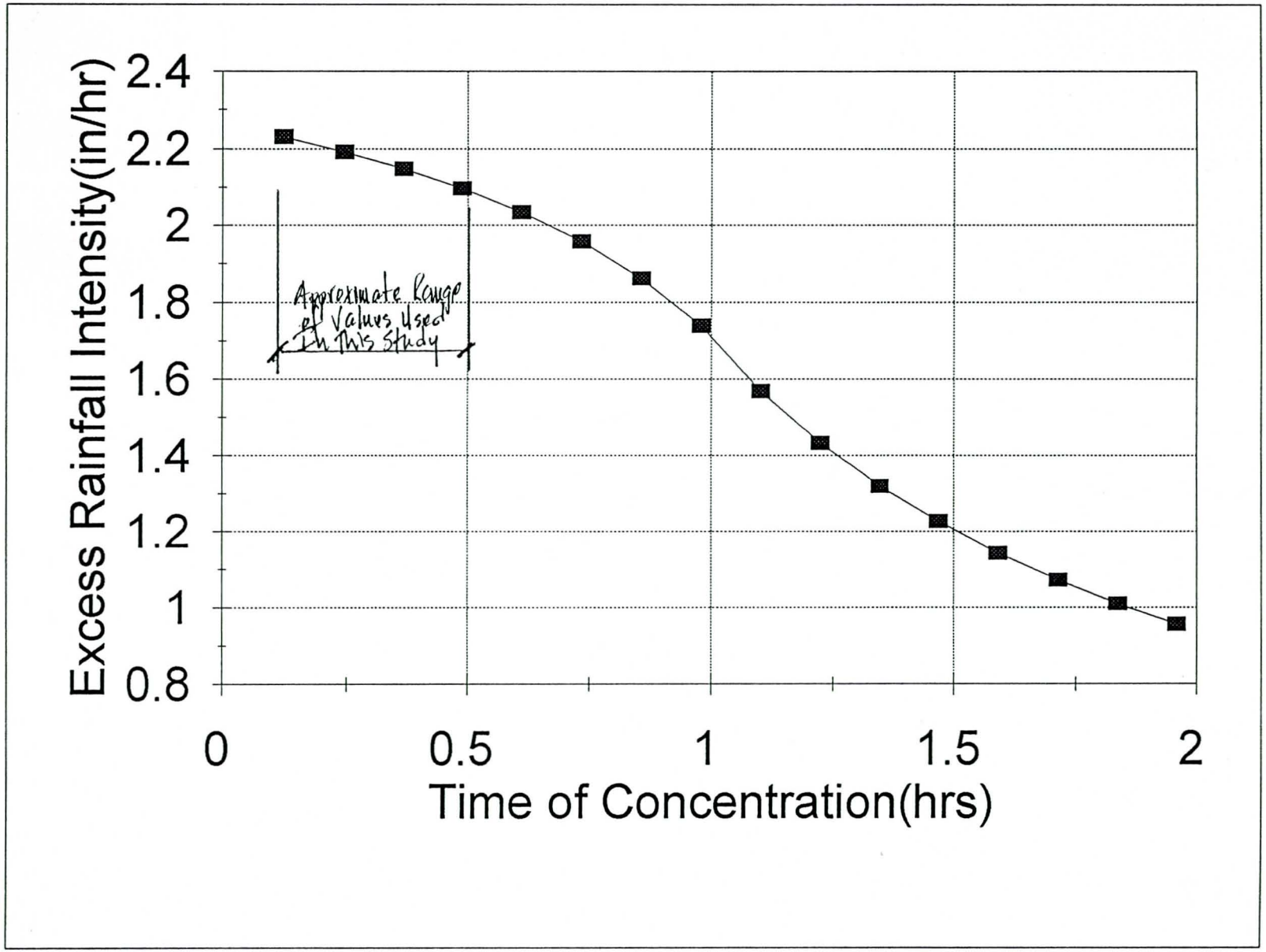

MORRISON-MAIERLE/CSSA, INC. 06-Jan-90

GROVERS AVENUE STORM DRAIN

BASIN	ELEVATION HIGH PT.	ELEVATION LOW PT.	LENGTH (INCHES)	LENGT (FEET)	SLOPE (FEET)	AREA (SQ. IN.)	AREA (SQ. FT)	AREA (ACRES)	SUM(AREA) (SQ MI)
1	1520.0	1478.5	11.3	6,750	0.0061	14.3	5,130,000	117.8	0.184
2	1518.0	1475.0	9.8	5,850	0.0074	6.5	2,322,000	53.3	0.267
3	1490.4	1472.0	3.8	2,250	0.0082	3.3	1,188,000	27.3	0.310
4	1520.0	1471.0	12.0	7,200	0.0068	15.3	5,490,000	126.0	0.507
5	1510.0	1465.5	12.0	7,200	0.0062	30.7	11,052,000	253.7	0.903
6	1520.0	1474.5	11.0	6,600	0.0069	16.6	5,976,000	137.2	1.118
7	1484.0	1471.5	2.8	1,650	0.0076	1.1	396,000	9.1	1.132
8	1520.0	1465.0	11.5	6,900	0.0080	25.2	9,072,000	208.3	1.457
9	1478.2	1471.5	4.8	950	0.0071		874,501	20.1	1.489
10	1475.0	1468.0	5.8	1,150	0.0061		739,558	17.0	1.515
11	1472.0	1461.5	9.0	1,800	0.0058		1,461,642	33.6	1.568
12	1471.0	1454.0	12.8	2,550	0.0067		1,712,769	39.3	1.629
13	1471.5	1468.0	2.5	500	0.0070		160,774	3.7	1.635
14	1468.0	1465.8	3.3	650	0.0034		425,763	9.8	1.650
15	1468.0	1463.0	5.5	1,100	0.0045		1,069,142	24.5	1.688
16	1465.5	1451.0	16.0	3,200	0.0045		2,943,281	67.6	1.794
17	1463.8	1457.8	5.0	1,000	0.0060		293,833	6.7	1.805
18	1465.0	1462.0	4.8	950	0.0032		61,109	1.4	1.807
19	1462.0	1458.0	5.0	1,000	0.0040		76,277	1.8	1.809
20	1458.0	1454.0	3.3	650	0.0062		46,767	1.1	1.811
21	1454.0	1451.0	6.5	1,300	0.0023		320,939	7.4	1.823
22	1450.5	1447.4	6.0	1,200	0.0026		293,934	6.7	1.833

Not Used In Study 2

REACH	ELEVATION HIGH PT.	ELEVATION LOW PT.	LENGTH (INCHES)	LENGTH (FEET)
1-2	1478.5	1475.0	2.6	520
2-3	1475.0	1472.0	3.9	780
3-4	1472.0	1471.0	3.4	680
4-5	1471.0	1465.5	5.1	1020
4-12	1471.0	1454.0	12.8	2560
5-16	1465.5	1451.0	13.0	2600
6-7	1474.5	1471.5	2.5	500
7-8	1471.5	1465.0	4.8	960
8-18	1465.0	1462.0	4.8	950
9-10	1471.5	1468.0	2.3	450
10-11	1468.0	1461.5	7.8	1550
11-12	1461.5	1454.0	6.0	1200
13-15	1468.0	1463.0	5.8	1150
13-14	1468.0	1465.8	3.5	700
14-15	1465.8	1463.0	5.8	1150
18-19	1462.0	1458.0	5.0	1000
19-20	1458.0	1454.0	3.3	650
20-21	1454.0	1451.0	6.5	1300
21-22	1450.5	1447.4	6.0	1200

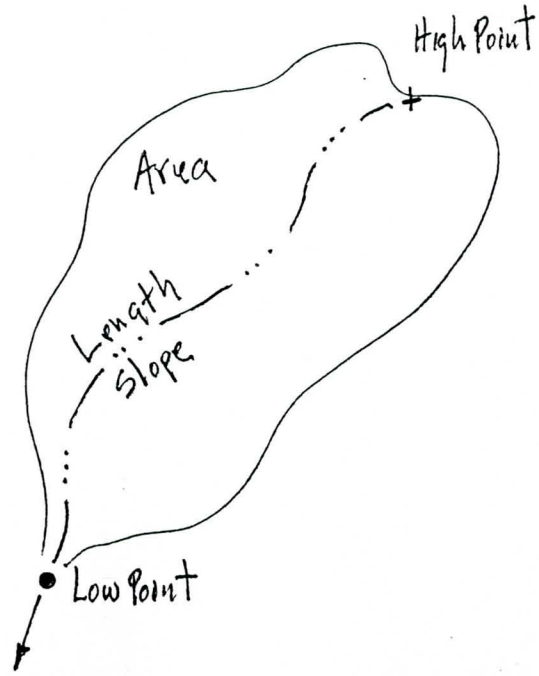

MORRISON-MAIERLE/CSSA, INC. 06-Jan-90

GROVERS AVENUE STORM DRAIN LATERAL

# =	Subarea number =		1	2	3	4	5	6	7	8
A =	Drainage Area =	ac	7.8	17.7	27.3	47.8	111.6	137.2	9.1	208.3
=		sq mi	0.012	0.028	0.043	0.075	0.174	0.214	0.014	0.325
L =	Stream length =	ft	1,200	1,800	2,250	4,200	4,200	6,600	1,650	6,900
=	/5280 =	mile	0.227	0.341	0.426	0.795	0.795	1.250	0.313	1.307
EL1 =	Upstream Elevation =	ft	1485.0	1490.0	1490.4	1496.0	1488	1520.0	1484.0	1520.0
EL2 =	Downstream Elevation =	ft	1478.5	1475.0	1472.0	1471.0	1465.5	1474.5	1471.5	1465.0
S =	Stream Slope = (EL1-EL2)/L =	ft/mile	28.60	44.00	43.18	31.43	28.29	36.40	40.00	42.09
m =	Factor from Table ~~3.1~~ = 5.1		-0.00625	-0.00625	-0.00625	-0.00625	-0.00625	-0.00625	-0.00625	-0.00625
b =	Term from Table ~~3.1~~ = 5.1 5.1		0.04	0.04	0.04	0.04	0.04	0.04	0.04	0.04
Kb =	Resistance coefficient from Table ~~3.1~~ Equation									
=	m*log(A)+b =		0.034424	0.0322	0.031027	0.029504	0.027202	0.026642	0.034009	0.025509
Tc =	Trial t =	hrs	0.247	0.256	0.283	0.420	0.415	0.479	0.260	0.457
i =	Excess rainfall intensity by interpolation =	in/hr	2.192	2.189	2.179	2.127	2.128	2.101	2.188	2.111
Tc =	Time of concentration from Eq. ~~3.2~~ 5.5									
=	11.4*L^0.5*Kb*0.52*S^ -0.31*i^ -0.38 *60	min	14.842	15.371	16.984	25.177	24.929	28.728	15.598	27.407
=	/60 =	hours	0.247	0.256	0.283	0.420	0.415	0.479	0.260	0.457
err(t) =	Tc - Tc = 0 ?	hours	0.000	0.000	0.000	0.000	0.000	0.000	0.000	0.000
Lag =	0.6*Tc =	hrs	0.148	0.154	0.170	0.252	0.249	0.287	0.156	0.274
INPUT TO HEC-1		NO.	1	2	3	4	5	6	7	8
		AREA	0.012	0.028	0.043	0.075	0.174	0.214	0.014	0.325
		LAG	0.148	0.154	0.170	0.252	0.249	0.287	0.156	0.274
Q =	Estimated flow = i a =	cfs	17	39	59	102	238	288	20	440
Va =	Average flow velocity = L/Tc/3600 =	fps	1.3	2.0	2.2	2.8	2.8	3.8	1.8	4.2

Not used in Study

-13-

GROVERS AVENUE STORM DRAIN LATERAL

# =	Subarea number =		9	10	11	12	13	14	15	16
A =	Drainage Area =	ac	20.1	17.0	33.6	39.3	3.7	9.8	24.5	67.6
=		sq mi	0.031	0.027	0.052	0.061	0.006	0.015	0.038	0.106
L =	Stream length =	ft	950	1,150	1,800	2,550	500	650	1,100	3,200
=	/5280 =	mile	0.180	0.218	0.341	0.483	0.095	0.123	0.208	0.606
EL1 =	Upstream Elevation =	ft	1478.2	1475.0	1472.0	1471.0	1471.5	1468.0	1468.0	1465.5
EL2 =	Downstream Elevation =	ft	1471.5	1468.0	1461.5	1454.0	1468.0	1465.8	1463.0	1451.0
S =	Stream Slope = (EL1-EL2)/L =	ft/mile	37.24	32.14	30.80	35.20	36.96	17.87	24.00	23.93
m =	Factor from Table ~~3.1~~ = 5.1		-0.00625	-0.00625	-0.00625	-0.00625	-0.00625	-0.00625	-0.00625	-0.00625
b =	Term from Table ~~3.1~~ = 5.1		0.04	0.04	0.04	0.04	0.04	0.04	0.04	0.04
Kb =	Resistance coefficient from Table ~~3.1~~ 5.1 Equation									
=	m*log(A)+b =		0.031858	0.032313	0.030464	0.030034	0.036455	0.033812	0.031313	0.028564
Tc =	Trial t =	hrs	0.194	0.226	0.278	0.316	0.151	0.208	0.238	0.391
i =	Excess rainfall intensity by interpolation =	in/hr	2.209	2.199	2.181	2.167	2.222	2.204	2.195	2.139
Tc =	Time of concentration from Eq. ~~3.2~~ 5.5									
=	11.4*L^0.5*Kb*0.52*S^ -0.31*i^ -0.38 *60	min	11.655	13.544	16.703	18.980	9.069	12.494	14.275	23.466
=	/60 =	hours	0.194	0.226	0.278	0.316	0.151	0.208	0.238	0.391
err(t) =	Tc - Tc = 0 ?	hours	0.000	0.000	0.000	0.000	0.000	0.000	-0.000	0.000
Lag =	0.6*Tc =	hrs	0.117	0.135	0.167	0.190	0.091	0.125	0.143	0.235

INPUT TO HEC-1	NO.	9	10	11	12	13	14	15	16
	AREA	0.031	0.027	0.052	0.061	0.006	0.015	0.038	0.106
	LAG	0.117	0.135	0.167	0.190	0.091	0.125	0.143	0.235

Q =	Estimated flow = i a =	cfs	44	37	73	85	8	22	54	145
Va =	Average flow velocity = L/Tc/3600 =	fps	1.4	1.4	1.8	2.2	0.9	0.9	1.3	2.3

GROVERS AVENUE STORM DRAIN LATERAL

# =	Subarea number =		17	18	19	20	21	22
A =	Drainage Area =	ac	6.7	1.4	1.8	1.1	7.4	6.7
=		sq mi	0.011	0.002	0.003	0.002	0.012	0.011
L =	Stream length =	ft	1,000	950	1,000	650	1,300	1,200
=	/5280 =	mile	0.189	0.180	0.189	0.123	0.246	0.227
EL1 =	Upstream Elevation =	ft	1463.8	1465.0	1462.0	1458.0	1454.0	1450.5
EL2 =	Downstream Elevation =	ft	1457.8	1462.0	1458.0	1454.0	1451.0	1447.4
S =	Stream Slope = (EL1-EL2)/L =	ft/mile	31.68	16.67	21.12	32.49	12.18	13.64
m =	Factor from Table ~~3.1~~ = 5.1		-0.00625	-0.00625	-0.00625	-0.00625	-0.00625	-0.00625
b =	Term from Table ~~3.1~~ = 5.1		0.04	0.04	0.04	0.04	0.04	0.04
Kb =	Resistance coefficient from Table ~~3.1~~ 5.1 Equation							
=	m*log(A)+b =		0.034819	0.039081	0.038479	0.039807	0.034579	0.034818
Tc =	Trial t =	hrs	0.220	0.278	0.263	0.188	0.338	0.314
i =	Excess rainfall intensity by interpolation =	in/hr	2.201	2.181	2.186	2.211	2.159	2.168
Tc =	Time of concentration from Eq. ~~3.2~~ 5.5							
=	11.4*L^0.5*Kb*0.52*S^ -0.31*i^ -0.38 *60	min	13.184	16.707	15.787	11.288	20.288	18.861
=	/60 =	hours	0.220	0.278	0.263	0.188	0.338	0.314
err(t) =	Tc - Tc = 0 ?	hours	0.000	0.000	0.000	0.000	0.000	0.000
Lag =	0.6*Tc =	hrs	0.132	0.167	0.158	0.113	0.203	0.189

INPUT TO HEC-1	NO.	17	18	19	20	21	22
	AREA	0.011	0.002	0.003	0.002	0.012	0.011
	LAG	0.132	0.167	0.158	0.113	0.203	0.189

Q =	Estimated flow = i a =	cfs	15	3	4	2	16	15
Va =	Average flow velocity = L/Tc/3600 =	fps	1.3	0.9	1.1	1.0	1.1	1.1

GROVERS AVENUE STORM DRAIN

Concentration Point No. 1: Union Hills Drive

sta	elev	cws =	101.18		101.68		102.18	
		p	a	p	a	p	a	
116.0	100.70							
111.5	103.00	0.00	0.00	0.00	0.00	5.05	1.49	Union Hills
107.0	101.10	0.00	0.00	0.00	0.00	4.88	0.59	
103.4	101.10	3.60	0.29	3.60	2.09	3.60	3.89	
96.4	99.80	7.12	5.11	7.12	8.61	7.12	12.11	
86.4	100.49	10.02	10.35	10.02	15.35	10.02	20.35	
59.0	101.00	27.40	11.92	27.40	25.62	27.40	39.32	
25.7	100.00	33.32	22.64	33.32	39.29	33.32	55.94	
25.6	100.49	0.50	0.09	0.50	0.14	0.50	0.19	
20.0	100.74	5.61	3.16	5.61	5.96	5.61	8.76	
9.3	100.80	10.70	4.39	10.70	9.74	10.70	15.09	
	Sum =	98.27	57.96	98.27	106.81	108.21	157.73	
	r =		0.59		1.09		1.61	
	s =		0.008		0.008		0.008	
	v =		6.25		9.39		12.18	
	Q =		362		1003		1921	
16.5	101.60							Side Street
21.5	101.57	0.00	0.00	5.00	0.48	5.00	2.98	
26.0	101.55	0.00	0.00	4.50	0.54	4.50	2.79	
26.1	101.18	0.00	0.00	0.38	0.03	0.38	0.08	
45.0	101.30	0.00	0.00	18.90	8.32	18.90	17.77	
62.0	101.20	0.00	0.00	17.00	7.31	17.00	15.81	
62.0	101.56	0.00	0.00	0.36	0.00	0.36	0.00	
66.8	101.62	0.00	0.00	4.80	0.43	4.80	2.83	
73.7	101.40	0.00	0.00	6.90	1.17	6.90	4.62	
	Sum =	0.00	0.00	57.85	18.28	57.85	46.88	
	r =		0.00		0.19		0.48	
	s =		0.0226		0.0226		0.0226	
	v =		0.00		4.86		9.11	
	Q =		0		89		427	
	Total Q =		362		1092		2349	Total
	Qi =		362		1092		2349	
	Qd =		362		1003		1921	

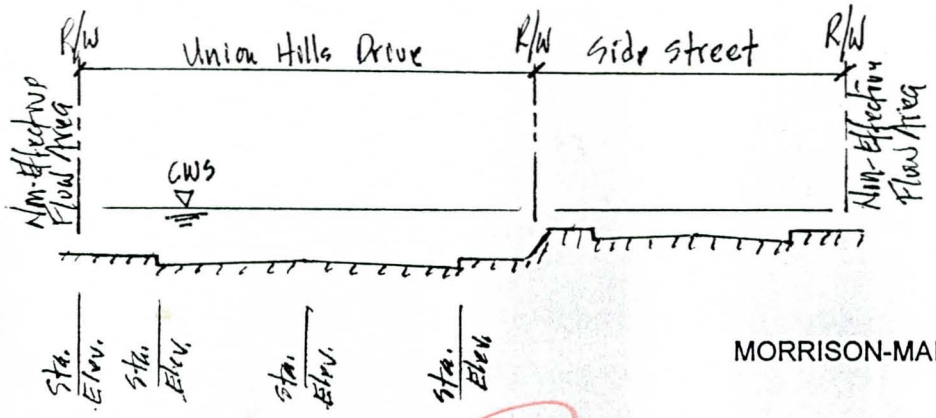

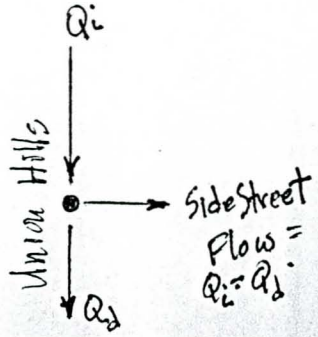

MORRISON-MAIERLE/CSSA, INC. 06-Jan-90

GROVERS AVENUE STORM DRAIN

Concentration Point No. 2: Union Hills Drive

sta	elev	cws =	101.02		101.52		102.02
		p	a	p	a	p	a
115.0	100.80						
93.0	101.10	22.00	1.54	22.00	12.54	22.00	23.54
74.2	100.53	18.81	3.85	18.81	13.25	18.81	22.65
59.0	100.68	15.20	6.31	15.20	13.91	15.20	21.51
26.1	100.00	32.91	22.37	32.91	38.82	32.91	55.27
26.0	100.48	0.49	0.08	0.49	0.13	0.49	0.18
11.5	100.80	14.50	5.51	14.50	12.76	14.50	20.01
11.5	100.80	0.00	0.00	0.00	0.00	0.00	0.00
11.5	100.80	0.00	0.00	0.00	0.00	0.00	0.00
11.5	100.80	0.00	0.00	0.00	0.00	0.00	0.00
11.5	100.80	0.00	0.00	0.00	0.00	0.00	0.00
	Sum =	103.91	39.66	103.91	91.41	103.91	143.16
	r =		0.38		0.88		1.38
	s =		0.0018		0.0018		0.0018
	v =		2.22		3.87		5.22
	Q =		88		354		747
19.8	101.30						
23.4	101.42	0.00	0.00	3.60	0.58	3.60	2.38
28.1	101.37	0.00	0.00	4.70	0.59	4.70	2.94
28.2	101.02	0.00	0.00	0.36	0.03	0.36	0.08
45.4	101.15	0.00	0.00	17.20	7.48	17.20	16.08
64.3	101.16	0.00	0.00	18.90	6.90	18.90	16.35
64.4	101.50	0.00	0.00	0.35	0.02	0.35	0.07
68.9	101.57	0.00	0.00	0.00	0.00	4.50	2.18
72.1	101.50	0.00	0.00	0.00	0.00	3.20	1.55
	Sum =	0.00	0.00	45.12	15.60	52.82	41.63
	r =		0.00		0.15		0.40
	s =		0.0126		0.0126		0.0126
	v =		0.00		3.15		6.06
	Q =		0		49		252
	Total Q =		88		403		999
	Qi =		88		403		999
	Qd =		88		354		747

MORRISON-MAIERLE/CSSA, INC. 06-Jan-90

GROVERS AVENUE STORM DRAIN

Concentration Point No. 3: Union Hills Drive

sta	elev	cws =	100.37		100.87		101.37
		p	a	p	a	p	a
120.0	101.10						
86.0	100.90	0.00	0.00	0.00	0.00	34.00	12.58
80.0	100.10	0.00	0.00	6.05	2.22	6.05	5.22
68.7	100.69	0.00	0.00	11.32	5.37	11.32	11.02
54.2	100.68	0.00	0.00	14.50	2.68	14.50	9.93
29.6	100.00	24.61	0.74	24.61	13.04	24.61	25.34
18.0	99.30	11.62	8.35	11.62	14.15	11.62	19.95
10.0	100.90	8.16	2.16	8.16	6.16	8.16	10.16
0.0	100.80	0.00	0.00	10.00	0.20	10.00	5.20
0.0	100.80	0.00	0.00	0.00	0.00	0.00	0.00
0.0	100.80	0.00	0.00	0.00	0.00	0.00	0.00
	Sum =	44.39	11.25	86.26	43.82	120.26	99.40
	r =		0.25		0.99		2.24
	s =		0.0036		0.0036		0.0036
	v =		2.39		5.91		10.20
	Q =		27		259		1014
14.2	101.20						
26.3	100.37	0.00	0.00	12.13	1.03	12.13	7.08
36.6	100.53	0.00	0.00	10.30	4.33	10.30	9.48
55.4	100.39	0.00	0.00	18.80	7.71	18.80	17.11
55.5	100.86	0.00	0.00	0.48	0.02	0.48	0.07
59.9	101.06	0.00	0.00	0.00	0.00	4.40	1.80
75.2	101.00	0.00	0.00	0.00	0.00	15.30	5.20
75.2	101.00	0.00	0.00	0.00	0.00	0.00	0.00
75.2	101.00	0.00	0.00	0.00	0.00	0.00	0.00
	Sum =	0.00	0.00	41.71	13.09	61.42	40.74
	r =		0.00		0.29		0.92
	s =		0.004		0.004		0.004
	v =		0.00		2.78		5.93
	Q =		0		36		242
	Total Q =		27		295		1256
	Qi =		27		295		1256
	Qd =		27		259		1014

MORRISON-MAIERLE/CSSA, INC. 06-Jan-90

GROVERS AVENUE STORM DRAIN

Concentration Point No. 4: Union Hills Drive

sta	elev	cws =	100.7		101.2		101.7
		p	a	p	a	p	a
120.0	100.20						
103.0	101.00	17.02	1.70	17.02	10.20	17.02	18.70
94.0	99.20	9.18	5.40	9.18	9.90	9.18	14.40
78.0	100.35	16.04	14.80	16.04	22.80	16.04	30.80
69.0	100.63	9.00	1.89	9.00	6.39	9.00	10.89
29.8	100.00	39.21	15.09	39.21	34.69	39.21	54.29
29.7	100.56	0.57	0.04	0.57	0.09	0.57	0.14
24.2	100.76	5.50	0.22	5.50	2.97	5.50	5.72
0.0	100.90	0.00	0.00	24.20	8.95	24.20	21.05
0.0	100.90	0.00	0.00	0.00	0.00	0.00	0.00
0.0	100.90	0.00	0.00	0.00	0.00	0.00	0.00
	Sum =	96.52	39.14	120.72	96.00	120.72	156.00
	r =		0.41		0.99		1.62
	s =		0.008		0.008		0.008
	v =		4.87		8.85		12.24
	Q =		190		850		1909
27.2	101.29						
31.8	101.20	0.00	0.00	0.00	0.00	4.60	2.09
31.9	100.70	0.00	0.00	0.51	0.02	0.51	0.07
55.4	100.81	0.00	0.00	23.50	10.46	23.50	22.21
75.0	101.00	0.00	0.00	19.60	5.78	19.60	15.58
75.0	101.00	0.00	0.00	0.00	0.00	0.00	0.00
75.0	101.00	0.00	0.00	0.00	0.00	0.00	0.00
75.0	101.00	0.00	0.00	0.00	0.00	0.00	0.00
75.0	101.00	0.00	0.00	0.00	0.00	0.00	0.00
	Sum =	0.00	0.00	43.61	16.26	48.21	39.96
	r =		0.00		0.17		0.41
	s =		0.0092		0.0092		0.0092
	v =		0.00		2.90		5.29
	Q =		0		47		211
	Total Q =		190		897		2121
	Qi =		190		897		2121
	Qd =		190		850		1909

MORRISON-MAIERLE/CSSA, INC. 06-Jan-90

GROVERS AVENUE STORM DRAIN

Concentration Point No. 5: Union Hills Drive

sta	elev	cws =	101.3		101.8		102.3
		p	a	p	a	p	a
120.0	101.20						
95.0	99.60	25.05	22.50	25.05	35.00	25.05	47.50
66.7	100.27	28.31	38.63	28.31	52.78	28.31	66.93
56.5	100.43	10.20	9.69	10.20	14.79	10.20	19.89
21.5	100.00	35.00	37.97	35.00	55.47	35.00	72.97
21.4	100.58	0.59	0.10	0.59	0.15	0.59	0.20
15.8	100.73	5.60	3.61	5.60	6.41	5.60	9.21
0.0	101.10	15.80	6.08	15.80	13.98	15.80	21.88
0.0	101.10	0.00	0.00	0.00	0.00	0.00	0.00
0.0	101.10	0.00	0.00	0.00	0.00	0.00	0.00
0.0	101.10	0.00	0.00	0.00	0.00	0.00	0.00
	Sum =	120.56	118.59	120.56	178.59	120.56	238.59
	r =		0.98		1.48		1.98
	s =		0.008		0.008		0.008
	v =		8.79		11.55		14.01
	Q =		1042		2062		3342
17.4	102.21						
21.9	102.12	0.00	0.00	0.00	0.00	4.50	0.61
22.0	101.64	0.00	0.00	0.00	0.00	0.49	0.04
60.8	101.51	0.00	0.00	38.80	8.73	38.80	28.13
60.9	102.08	0.00	0.00	0.58	0.00	0.58	0.05
65.3	102.08	0.00	0.00	0.00	0.00	4.40	0.97
80.7	101.30	0.00	0.00	15.42	1.69	15.42	9.39
80.7	101.30	0.00	0.00	0.00	0.00	0.00	0.00
80.7	101.30	0.00	0.00	0.00	0.00	0.00	0.00
	Sum =	0.00	0.00	54.80	10.42	64.19	39.19
	r =		0.00		0.09		0.33
	s =		0.0092		0.0092		0.0092
	v =		0.00		1.86		4.50
	Q =		0		19		176
	Total Q =		1042		2082		3519
	Qi =		1042		2082		3519
	Qd =		1042		2062		3342

MORRISON-MAIERLE/CSSA, INC. 06-Jan-90

GROVERS AVENUE STORM DRAIN

Concentration Point Nos. 13 & 14:

sta	elev	cws =	101.51		102.01		102.51
		p	a	p	a	p	a
16.5	101.60						
21.5	101.57	0.00	0.00	5.00	2.13	5.00	4.63
26.0	101.55	0.00	0.00	4.50	2.03	4.50	4.28
26.1	101.18	0.38	0.01	0.38	0.06	0.38	0.11
45.0	101.30	18.90	5.10	18.90	14.55	18.90	24.00
62.0	101.20	17.00	4.42	17.00	12.92	17.00	21.42
62.0	101.56	0.36	0.00	0.36	0.00	0.36	0.00
66.8	101.62	0.00	0.00	4.80	2.02	4.80	4.42
73.7	101.40	0.00	0.00	6.90	3.45	6.90	6.90
73.7	101.40	0.00	0.00	0.00	0.00	0.00	0.00
73.7	101.40	0.00	0.00	0.00	0.00	0.00	0.00
	Sum =	36.64	9.54	57.85	37.15	57.85	65.75
	r =		0.26		1.01		1.79
	s =		0.008		0.008		0.008
	v =		3.62		8.97		13.12
	Q =		35		333		863
16.5	101.93						
21.5	101.90	0.00	0.00	5.00	0.48	5.00	2.98
26.0	101.88	0.00	0.00	4.50	0.54	4.50	2.79
26.1	101.51	0.00	0.00	0.38	0.03	0.38	0.08
45.0	101.63	0.00	0.00	18.90	8.32	18.90	17.77
62.0	101.53	0.00	0.00	17.00	7.31	17.00	15.81
62.0	101.89	0.00	0.00	0.36	0.00	0.36	0.00
66.8	101.95	0.00	0.00	4.80	0.43	4.80	2.83
73.7	101.73	0.00	0.00	6.90	1.17	6.90	4.62
	Sum =	0.00	0.00	57.85	18.28	57.85	46.88
	r =		0.00		0.50		1.28
	s =		0.0226		0.0226		0.0226
	v =		0.00		9.39		17.60
	Q =		0		172		825
	Total Q =		35		505		1688
	Qi =		35		505		1688
	Qd =		35		333		863

MORRISON-MAIERLE/CSSA, INC. 06-Jan-90

```
1****************************************
****************************************
 *                                      *                                                    *
*
 *   FLOOD HYDROGRAPH PACKAGE  (HEC-1)  *                                                    *    U.S. ARMY
CORPS OF ENGINEERS      *
 *              SEPTEMBER 1990          *                                                    *    HYDROLOGIC
ENGINEERING CENTER     *
 *              VERSION 4.0             *                                                    *         609
SECOND STREET           *
 *                                      *                                                    *       DAVIS,
CALIFORNIA 95616        *
 *  RUN DATE  12/29/1993  TIME  10:34:30 *                                                    *           (916)
756-1104             *
 *                                      *                                                    *
*
 ****************************************
****************************************
```

```
X     X  XXXXXXX   XXXXX          X
X     X  X        X     X        XX
X     X  X        X               X
XXXXXXX  XXXX     X        XXXXX  X
X     X  X        X               X
X     X  X        X     X         X
X     X  XXXXXXX   XXXXX         XXX
```

THIS PROGRAM REPLACES ALL PREVIOUS VERSIONS OF HEC-1 KNOWN AS HEC1 (JAN 73), HEC1GS, HEC1DB, AND HEC1KW.

THE DEFINITIONS OF VARIABLES -RTIMP- AND -RTIOR- HAVE CHANGED FROM THOSE USED WITH THE 1973-STYLE INPUT STRUCTURE.

THE DEFINITION OF -AMSKK- ON RM-CARD WAS CHANGED WITH REVISIONS DATED 28 SEP 81. THIS IS THE FORTRAN77 VERSION

NEW OPTIONS: DAMBREAK OUTFLOW SUBMERGENCE , SINGLE EVENT DAMAGE CALCULATION, DSS:WRITE STAGE FREQUENCY,
DSS:READ TIME SERIES AT DESIRED CALCULATION INTERVAL LOSS RATE:GREEN AND AMPT INFILTRATION
KINEMATIC WAVE: NEW FINITE DIFFERENCE ALGORITHM

1 HEC-1 INPUT
PAGE 1

```
LINE          ID.......1.......2.......3.......4.......5.......6.......7.......8.......9......10

  1           ID        MORRISON-MAIERLE/CSSA,
  2           ID        BRUCE J. FRIEDHOFF, P.E
  3           ID        PROJECT NO.
  4           ID
  5           ID        GROVERS AVENUE STORM DRAIN LATERAL
  6           ID        FROM CAVE CREEK ROAD TO 32ND STREET
  7           ID
  8           ID
  9           ID
 10           ID
 11           ID
 12           ID
 13           ID
 14           ID
 15           ID
 16           ID
              *DIAGRAM
 17           IT       5  12JU93     715     300
 18           IO       5
 19           IN      29

 20           KK      13
 21           KM            RUNOFF FROM SUBAREA                    13
 22           BA   0.006
 23           LS              83       0
 24           UD   0.091
 25           PB    4.04
 26           PC   0.000   0.004   0.008   0.013   0.018   0.022   0.026   0.031   0.035   0.040
 27           PC   0.044   0.048   0.053   0.057   0.062   0.066   0.071   0.075   0.080   0.093
 28           PC   0.107   0.120   0.140   0.170   0.500   0.830   0.860   0.880   0.893   0.907
 29           PC   0.920   0.924   0.928   0.933   0.937   0.942   0.947   0.951   0.956   0.960
 30           PC   0.964   0.969   0.973   0.978   0.982   0.987   0.991   0.995   1.000   1.000

 31           KK    13.1
 32           KM            DIVERT FLOW
 33           DT    13.2
 34           DI       0      35     505    1688
 35           DQ       0       1     172     825

 36           KK    13.3
```

Taken from TR-20 Code

```
 37          KM          REACH ROUTE FROM                          13-15
 38          RK    1150  0.0043   0.012            TRAP      50       0

 39          KK    13.2
 40          KM          RETRIEVE DIVERTED FLOW
 41          DR    13.2

 42          KK    13.4
 43          KM          REACH ROUTE FROM                          13-14
 44          RK     700  0.0031   0.012            TRAP      50       0
1                                          HEC-1 INPUT
PAGE  2

LINE         ID.......1.......2.......3.......4.......5.......6.......7.......8.......9......10

 45          KK      14
 46          KM          RUNOFF FROM SUBAREA                       14
 47          BA   0.015
 48          LS             83       0
 49          UD   0.125

 50          KK    14.1  ADD HYDROGRAPH
 51          HC       2

 52          KK    14.1
 53          KM          DIVERT FLOW
 54          DT    14.2
 55          DI       0      35     505    1688
 56          DQ       0       1     172     825

 57          KK    14.3
 58          KM          REACH ROUTE FROM                          14-15
 59          RK    1150  0.0024   0.012            TRAP      50       0

 60          KK      15
 61          KM          RUNOFF FROM SUBAREA                       15
 62          BA   0.038
 63          LS             83       0
 64          UD   0.143

 65          KK    15.1  ADD HYDROGRAPH
 66          HC       3

 67          KK      18
 68          KM          RUNOFF FROM SUBAREA                       18
 69          BA   0.002
 70          LS             83       0
 71          UD   0.167

 72          KK    18.1  ADD HYDROGRAPH
 73          HC       2

 74          KK   18-19
 75          KM          REACH ROUTE FROM                          18-19
 76          RK    1000  0.0040   0.012            CIRC       8       0

 77          KK      17
 78          KM          RUNOFF FROM SUBAREA                       17
 79          BA   0.011
 80          LS             83       0
 81          UD   0.132

 82          KK      19
 83          KM          RUNOFF FROM SUBAREA                       19
 84          BA   0.003
 85          LS             83       0
 86          UD   0.158
1                                          HEC-1 INPUT
PAGE  3

LINE         ID.......1.......2.......3.......4.......5.......6.......7.......8.......9......10

 87          KK    19.1  ADD HYDROGRAPH
 88          HC       3

 89          KK   19-20
 90          KM          REACH ROUTE FROM                          19-20
 91          RK     650  0.0062   0.012            CIRC       8       0

 92          KK      20
 93          KM          RUNOFF FROM SUBAREA                       20
 94          BA   0.002
 95          LS             83       0
 96          UD   0.113

 97          KK    20.1
 98          HC       2

 99          KK       1
100          KM          RUNOFF FROM SUBAREA                       1
```

```
101          BA   0.012
102          LS              83        0
103          UD   0.148

104          KK     1.2
105          KM            DIVERT FLOW
106          DT     1.2
107          DI       0      362     1092     2349
108          DQ       0      361     1003     1921

109          KK     1-9
110          KM            REACH ROUTE FROM                          1-9
111          RK     900  0.0078   0.012            TRAP      50        0

112          KK       9
113          KM            RUNOFF FROM SUBAREA                       9
114          BA   0.031
115          LS              83        0
116          UD   0.117

117          KK     9.1    ADD HYDROGRAPH
118          HC       2

119          KK   RET1
120          KM            ROUTE INFLOW THROUGH RETENTION BASIN
121          KO       3
122          RS       1     ELEV     1466
123          SA    0.05     0.18     0.24     0.24
124          SE    1466     1468     1470     1472
125          SS    1470       50        3      1.5
1                                          HEC-1 INPUT
PAGE  4

LINE         ID.......1.......2.......3.......4.......5.......6.......7.......8.......9......10

126          KK    9-10
127          KM            REACH ROUTE FROM                          9-10
128          RK     450  0.0078   0.012            TRAP      50        0

129          KK       2
130          KM            RUNOFF FROM SUBAREA                       2
131          BA   0.028
132          LS              83        0
133          UD   0.154

134          KK     1.3
135          KM            RETRIEVE DIVERTED FLOW 1.2
136          DR     1.2

137          KK     1-2
138          KM            REACH ROUTE FROM                          1-2
139          RK     520  0.0067   0.012            TRAP      50        0

140          KK     2.1    ADD HYDROGRAPH
141          HC       2

142          KK     2.1
143          KM            DIVERT FLOW
144          DT     2.2
145          DI       0       88      403      999
146          DQ       0       87      354      747

147          KK    2-10
148          KM            REACH ROUTE FROM                          2-10
149          RK    1150  0.0061   0.012            TRAP      50        0

150          KK      10
151          KM            RUNOFF FROM SUBAREA                       10
152          BA   0.027
153          LS              83        0
154          UD   0.135

155          KK    10.1    ADD HYDROGRAPH
156          HC       3

157          KK    RET2
158          KM            ROUTE INFLOW THROUGH RETENTION BASIN
159          KO       3
160          RS       2     ELEV     1464
161          SA    0.20     0.33     0.39     0.39
162          SE    1464     1466     1468     1470
163          SS    1468       50        3      1.5

164          KK   10-11
165          KM            REACH ROUTE FROM                          10-11
166          RK    1550  0.0042   0.012            TRAP      50        0
1                                          HEC-1 INPUT
PAGE  5

LINE         ID.......1.......2.......3.......4.......5.......6.......7.......8.......9......10
```

```
167          KK     2.2
168          KM            RETRIEVE DIVERTED FLOW
169          DR     2.2

170          KK     2-3
171          KM            REACH ROUTE FROM                          2-3
172          RK     780  0.0038   0.012            TRAP      50        0

173          KK       3
174          KM            RUNOFF FROM SUBAREA                       3
175          BA   0.043
176          LS               83       0
177          UD   0.170

178          KK     3.1   ADD HYDROGRAPH
179          HC       2

180          KK     3.1
181          KM            DIVERT FLOW
182          DT     3.2
183          DI       0      27     295    1256
184          DQ       0      26     259    1014

185          KK    3-11
186          KM            REACH ROUTE FROM                         3-11
187          RK    1800  0.0058   0.012            TRAP      50        0

188          KK    14.3
189          KM            RETRIEVE DIVERTED FLOW
190          DR    14.2

191          KK      11
192          KM            RUNOFF FROM SUBAREA                      11
193          BA   0.052
194          LS               83       0
195          UD   0.167

196          KK    11.1   ADD HYDROGRAPH
197          HC       4

198          KK   11-12
199          KM            REACH ROUTE FROM                        11-12
200          RK    1200  0.0063   0.012            TRAP      50        0

201          KK     3.3
202          KM            RETRIEVE DIVERTED FLOW
203          DR     3.2

204          KK     3-4
205          KM            REACH ROUTE FROM                         3-4
206          RK     680  0.0015   0.012            TRAP      50        0
```



```
                                   HEC-1 INPUT

LINE         ID.......1.......2.......3.......4.......5.......6.......7.......8.......9......10

207          KK       4
208          KM            RUNOFF FROM SUBAREA                       4
209          BA   0.075
210          LS               83       0
211          UD   0.252

212          KK     4.1   ADD HYDROGRAPH
213          HC       2

214          KK     4.1
215          KM            DIVERT FLOW
216          DT     4.2
217          DI       0     190     897    2121
218          DQ       0     189     850    1909

219          KK    4-12
220          KM            REACH ROUTE FROM                        4-12
221          RK    2560  0.0066   0.012            TRAP      50        0

222          KK      12
223          KM            RUNOFF FROM SUBAREA                      12
224          BA   0.061
225          LS               83       0
226          UD   0.190

227          KK    12.1   ADD HYDROGRAPH
228          HC       3

229          KK    20.2   ADD HYDROGRAPH AT 28TH STREET
230          HC       2

231          KK   20-21
232          KM            REACH ROUTE FROM                        20-21
233          RK    1300  0.0023   0.012            CIRC       8        0
```

```
          234          KK     4.2
          235          KM            RETRIEVE DIVERTED FLOW
          236          DR     4.2

          237          KK     4-5
          238          KM            REACH ROUTE FROM                        4-5
          239          RK    1020  0.0054   0.012            TRAP      50        0

          240          KK       5
          241          KM            RUNOFF FROM SUBAREA                     5
          242          BA   0.174
          243          LS               83       0
          244          UD   0.249
1                                                   HEC-1 INPUT
PAGE  7

         LINE          ID.......1.......2.......3.......4.......5.......6.......7.......8.......9......10

          245          KK     5.1   ADD HYDROGRAPH
          246          HC       2

          247          KK     5.1
          248          KM            DIVERT FLOW
          249          DT     5.2
          250          DI       0    1042    2082    3519
          251          DQ       0    1041    2062    3342
          252          *K    5-16
          253          *M            REACH ROUTE FROM                        5-16
          254          *K    2600  0.0056   0.012            TRAP      50        0

          255          KK      16
          256          KM            RUNOFF FROM SUBAREA                     16
          257          BA   0.106
          258          LS               83       0
          259          UD   0.235

          260          KK    16.1   ADD HYDROGRAPH
          261          HC       2

          262          KK      21
          263          KM            RUNOFF FROM SUBAREA                     21
          264          BA   0.012
          265          LS               83       0
          266          UD   0.203

          267          KK    21.1   ADD HYDROGRAPH
          268          HC       3

          269          KK   21-22
          270          KM            REACH ROUTE FROM                        21-22
          271          RK    1200  0.0026   0.012            CIRC       8        0

          272          KK      22
          273          KM            RUNOFF FROM SUBAREA                     22
          274          BA   0.011
          275          LS               83       0
          276          UD   0.189

          277          KK    22.1   ADD HYDROGRAPH
          278          HC       2
          279          ZZ
1
                 SCHEMATIC DIAGRAM OF STREAM NETWORK
 INPUT
  LINE      (V) ROUTING          (--->) DIVERSION OR PUMP FLOW

   NO.      (.) CONNECTOR        (<---) RETURN OF DIVERTED OR PUMPED FLOW

   20          13
                .
                .
   33           .-------->    13.2
   31       13.1
                V
                V
   36       13.3
                .
                .
   41           .           .<-------    13.2
   39           .        13.2
                .           V
                .           V
   42           .        13.4
                .           .
                .           .
   45           .           .          14
                .           .           .
                .           .           .
   50           .        14.1............
                .           .
```

```
                .           .
54              .           .-------->    14.2
52              .        14.1
                .           V
                .           V
57              .        14.3
                .           .
                .           .
60              .           .          15
                .           .           .
                .           .           .
65           15.1.......................
                .
                .
67              .          18
                .           .
                .           .
72           18.1............
                V
                V
74           18-19
                .
                .
77              .          17
                .           .
                .           .
82              .           .          19
                .           .           .
                .           .           .
87           19.1.......................
                V
                V
89           19-20
                .
                .
92              .          20
                .           .
                .           .
97           20.1............
                .
                .
99              .           1
                .           .
                .           .
106             .           .-------->     1.2
104             .         1.2
                .           V
                .           V
109             .         1-9
                .           .
                .           .
112             .           .           9
                .           .           .
                .           .           .
117             .         9.1............
                .           V
                .           V
119             .       RET1
                .           V
                .           V
126             .        9-10
                .           .
                .           .
129             .           .           2
                .           .           .
                .           .           .
136             .           .           .          .<-------     1.2
134             .           .           .        1.3
                .           .           .          V
                .           .           .          V
137             .           .           .        1-2
                .           .           .          .
                .           .           .          .
140             .           .        2.1............
                .           .           .
                .           .           .
144             .           .           .-------->     2.2
142             .           .        2.1
                .           .           V
                .           .           V
147             .           .       2-10
                .           .           .
                .           .           .
150             .           .           .         10
                .           .           .          .
                .           .           .          .
155             .        10.1.......................
                .           V
                .           V
157             .       RET2
                .           V
                .           V
```

Both Way

```
164          .       10-11
             .          .
             .          .
169          .          .          .<-------     2.2
167          .          .       2.2
             .          .         V
             .          .         V
170          .          .       2-3
             .          .         .
             .          .         .
173          .          .         .          3
             .          .         .          .
             .          .         .          .
178          .          .       3.1............
             .          .         .
             .          .         .
182          .          .         .------->    3.2
180          .          .       3.1
             .          .         V
             .          .         V
185          .          .      3-11
             .          .         .
             .          .         .
190          .          .         .          .<-------    14.2
188          .          .         .       14.3
             .          .         .          .
             .          .         .          .
191          .          .         .          .          11
             .          .         .          .           .
             .          .         .          .           .
196          .       11.1.......................................
             .          V
             .          V
198          .       11-12
             .          .
             .          .
203          .          .          .<-------     3.2
201          .          .       3.3
             .          .         V
             .          .         V
204          .          .       3-4
             .          .         .
             .          .         .
207          .          .         .          4
             .          .         .          .
             .          .         .          .
212          .          .       4.1............
             .          .         .
             .          .         .
216          .          .         .------->    4.2
214          .          .       4.1
             .          .         V
             .          .         V
219          .          .      4-12
             .          .         .
             .          .         .
222          .          .         .         12
             .          .         .          .
             .          .         .          .
227          .       12.1........................
             .          .
             .          .
229       20.2............
             V
             V
231      20-21
             .
             .
236          .          .<-------     4.2
234          .       4.2
             .          V
             .          V
237          .       4-5
             .          .
             .          .
240          .          .          5
             .          .          .
             .          .          .
245          .       5.1............
             .          .
             .          .
249          .          .------->     5.2
247          .       5.1
             .          .
             .          .
255          .          .         16
             .          .          .
             .          .          .
260          .       16.1............
             .          .
             .          .
262          .          .         21
```

28th Street

26th street

```
                .          .          .
                .          .          .
  267        21.1.......................
                V
                V
  269       21-22
                .
                .
  272           .          22
                .           .
                .           .
  277        22.1...........
```

```
 (***) RUNOFF ALSO COMPUTED AT THIS LOCATION
1****************************************
****************************************
 *                                      *                                                    *
*
 *   FLOOD HYDROGRAPH PACKAGE  (HEC-1)  *                                                    *    U.S. ARMY
CORPS OF ENGINEERS      *
 *             SEPTEMBER 1990           *                                                    *    HYDROLOGIC
ENGINEERING CENTER    *
 *              VERSION 4.0             *                                                    *         609
SECOND STREET          *
 *                                      *                                                    *       DAVIS,
CALIFORNIA 95616       *
 *  RUN DATE  12/29/1993  TIME  10:34:30 *                                                    *           (916)
756-1104            *
 *                                      *                                                    *
*
 ****************************************
****************************************
```

MORRISON-MAIERLE/CSSA,
BRUCE J. FRIEDHOFF, P.E
PROJECT NO.

GROVERS AVENUE STORM DRAIN LATERAL
FROM CAVE CREEK ROAD TO 32ND STREET

```
  18 IO          OUTPUT CONTROL VARIABLES
                       IPRNT           5  PRINT CONTROL
                       IPLOT           0  PLOT CONTROL
                       QSCAL          0.  HYDROGRAPH PLOT SCALE

     IT          HYDROGRAPH TIME DATA
                        NMIN           5  MINUTES IN COMPUTATION INTERVAL
                       IDATE      12JU93  STARTING DATE
                       ITIME        0715  STARTING TIME
                          NQ         300  NUMBER OF HYDROGRAPH ORDINATES
                      NDDATE      2   93  ENDING DATE
                      NDTIME        0810  ENDING TIME
                       ICENT          19  CENTURY MARK

                  COMPUTATION INTERVAL     .08 HOURS
                       TOTAL TIME BASE   24.92 HOURS

          ENGLISH UNITS
               DRAINAGE AREA          SQUARE MILES
               PRECIPITATION DEPTH    INCHES
               LENGTH, ELEVATION      FEET
               FLOW                   CUBIC FEET PER SECOND
               STORAGE VOLUME         ACRE-FEET
               SURFACE AREA           ACRES
               TEMPERATURE            DEGREES FAHRENHEIT
```

```
 *** *** *** *** *** *** *** *** *** *** *** *** *** *** *** *** *** *** *** *** *** *** *** *** *** *** *** *** *** *** *** ***
*** *** *** *** *** ***

            **************
            *            *
  119 KK    *     RET1   *
            *            *
            **************
```

```
121 KO          OUTPUT CONTROL VARIABLES
                      IPRNT          3  PRINT CONTROL
                      IPLOT          0  PLOT CONTROL
                      QSCAL         0.  HYDROGRAPH PLOT SCALE

               HYDROGRAPH ROUTING DATA

122 RS          STORAGE ROUTING
                      NSTPS          1  NUMBER OF SUBREACHES
                       ITYP       ELEV  TYPE OF INITIAL CONDITION
                     RSVRIC    1466.00  INITIAL CONDITION
                          X        .00 WORKING R AND D COEFFICIENT

123 SA               AREA         .1        .2        .2        .2

124 SE          ELEVATION    1466.00   1468.00   1470.00   1472.00

125 SS          SPILLWAY
                       CREL    1470.00  SPILLWAY CREST ELEVATION
                      SPWID      50.00  SPILLWAY WIDTH
                       COQW       3.00  WEIR COEFFICIENT
                       EXPW       1.50  EXPONENT OF HEAD
```

***

COMPUTED STORAGE-ELEVATION DATA

STORAGE	.00	.22	.64	1.12
ELEVATION	1466.00	1468.00	1470.00	1472.00

COMPUTED OUTFLOW-ELEVATION DATA

OUTFLOW	.00	.00	.07	.58	1.96	4.66	9.09	15.71	24.96
37.24									
ELEVATION	1466.00	1470.00	1470.01	1470.02	1470.06	1470.10	1470.15	1470.22	1470.30
1470.40									
OUTFLOW	53.03	72.75	96.83	125.71	159.83	199.61	245.53	297.96	357.40
424.26									
ELEVATION	1470.50	1470.62	1470.75	1470.89	1471.04	1471.21	1471.39	1471.58	1471.78
1472.00									

COMPUTED STORAGE-OUTFLOW-ELEVATION DATA

STORAGE	.00	.22	.64	.64	.65	.66	.67	.69	.71
.73									
OUTFLOW	.00	.00	.00	.58	1.96	4.66	9.09	15.71	24.96
37.24									
ELEVATION	1466.00	1468.00	1470.00	1470.02	1470.06	1470.10	1470.15	1470.22	1470.30
1470.40									
STORAGE	.76	.78	.81	.85	.89	.93	.97	1.01	1.06
1.12									
OUTFLOW	53.03	72.75	96.83	125.71	159.83	199.61	245.53	297.96	357.40
424.26									
ELEVATION	1470.50	1470.62	1470.75	1470.89	1471.04	1471.21	1471.39	1471.58	1471.78
1472.00									

*** WARNING *** MODIFIED PULS ROUTING MAY BE NUMERICALLY UNSTABLE FOR OUTFLOWS BETWEEN 5. TO 424.
THE ROUTED HYDROGRAPH SHOULD BE EXAMINED FOR OSCILLATIONS OR OUTFLOWS GREATER THAN PEAK INFLOWS.
THIS CAN BE CORRECTED BY DECREASING THE TIME INTERVAL OR INCREASING STORAGE (USE A LONGER REACH.)

*** *** *** *** ***

HYDROGRAPH AT STATION RET1

			MAXIMUM AVERAGE FLOW			
PEAK FLOW	TIME		6-HR	24-HR	72-HR	24.92-HR
+ (CFS)	(HR)	(CFS)				
+ 43.	12.08		6.	2.	2.	2.
		(INCHES)	1.260	1.398	1.398	1.398
		(AC-FT)	3.	3.	3.	3.

		MAXIMUM AVERAGE STORAGE			
PEAK STORAGE	TIME	6-HR	24-HR	72-HR	24.92-HR
+ (AC-FT)	(HR)				
1.	12.08	1.	0.	0.	0.

		MAXIMUM AVERAGE STAGE			
PEAK STAGE	TIME	6-HR	24-HR	72-HR	24.92-HR
+ (FEET)	(HR)				
1470.44	12.08	1470.09	1468.29	1468.21	1468.21

CUMULATIVE AREA = .04 SQ MI

```
*** *** *** *** *** *** *** *** *** *** *** *** *** *** *** *** *** *** *** *** *** *** *** *** *** *** *** ***
*** *** *** *** *** ***

              **************
              *            *
  157 KK      *      RET2  *
              *            *
              **************

  159 KO          OUTPUT CONTROL VARIABLES
                        IPRNT           3  PRINT CONTROL
                        IPLOT           0  PLOT CONTROL
                        QSCAL          0.  HYDROGRAPH PLOT SCALE

                HYDROGRAPH ROUTING DATA

  160 RS          STORAGE ROUTING
                        NSTPS           2  NUMBER OF SUBREACHES
                         ITYP        ELEV  TYPE OF INITIAL CONDITION
                       RSVRIC     1464.00  INITIAL CONDITION
                            X         .00 WORKING R AND D COEFFICIENT

  161 SA               AREA          .2        .3        .4        .4

  162 SE          ELEVATION     1464.00   1466.00   1468.00   1470.00

  163 SS          SPILLWAY
                         CREL     1468.00  SPILLWAY CREST ELEVATION
                        SPWID       50.00  SPILLWAY WIDTH
                         COQW        3.00  WEIR COEFFICIENT
                         EXPW        1.50  EXPONENT OF HEAD

                                                                  ***

                                                COMPUTED STORAGE-ELEVATION DATA

            STORAGE        .00       .52      1.24      2.02
          ELEVATION    1464.00   1466.00   1468.00   1470.00

                                                COMPUTED OUTFLOW-ELEVATION DATA

            OUTFLOW        .00       .00       .07       .58      1.96      4.66      9.09     15.71     24.96
37.24
          ELEVATION    1464.00   1468.00   1468.01   1468.02   1468.06   1468.10   1468.15   1468.22   1468.30
1468.40

            OUTFLOW      53.03     72.75     96.83    125.71    159.83    199.61    245.53    297.96    357.40
424.26
          ELEVATION    1468.50   1468.62   1468.75   1468.89   1469.04   1469.21   1469.39   1469.58   1469.78
1470.00

                                              COMPUTED STORAGE-OUTFLOW-ELEVATION DATA

            STORAGE        .00       .52      1.24      1.25      1.27      1.28      1.30      1.33      1.36
1.40
            OUTFLOW        .00       .00       .00       .58      1.96      4.66      9.09     15.71     24.96
37.24
          ELEVATION    1464.00   1466.00   1468.00   1468.02   1468.06   1468.10   1468.15   1468.22   1468.30
1468.40

            STORAGE       1.44      1.48      1.54      1.59      1.65      1.72      1.79      1.86      1.94
2.02
            OUTFLOW      53.03     72.75     96.83    125.71    159.83    199.61    245.53    297.96    357.40
424.26
          ELEVATION    1468.50   1468.62   1468.75   1468.89   1469.04   1469.21   1469.39   1469.58   1469.78
1470.00

 *** WARNING *** MODIFIED PULS ROUTING MAY BE NUMERICALLY UNSTABLE FOR OUTFLOWS BETWEEN        2. TO      424.
                 THE ROUTED HYDROGRAPH SHOULD BE EXAMINED FOR OSCILLATIONS OR OUTFLOWS GREATER THAN PEAK
INFLOWS.
                 THIS CAN BE CORRECTED BY DECREASING THE TIME INTERVAL OR INCREASING STORAGE (USE A LONGER
REACH.)

      ***             ***             ***             ***             ***

                          HYDROGRAPH AT STATION     RET2

  PEAK FLOW      TIME                          MAXIMUM AVERAGE FLOW
                                     6-HR        24-HR       72-HR     24.92-HR
+   (CFS)        (HR)
                                   (CFS)
+      84.      11.83                10.          3.          3.          3.
                                (INCHES)       .915       1.028       1.028       1.028
                                 (AC-FT)         5.          5.          5.          5.

 PEAK STORAGE    TIME                          MAXIMUM AVERAGE STORAGE
                                     6-HR        24-HR       72-HR     24.92-HR
+  (AC-FT)       (HR)
```

```
      1.      11.83                    1.          0.          0.          0.

  PEAK STAGE    TIME                          MAXIMUM AVERAGE STAGE
                                        6-HR        24-HR       72-HR      24.92-HR
+   (FEET)      (HR)
  1468.68      11.83                 1468.12     1466.24     1466.16     1466.16

                          CUMULATIVE AREA =      .10 SQ MI

        *** FDKRUT WARNING TIME STEP CALCULATION FAILED TO CONVERGE. STABILITY PROBLEMS MAY RESULT

        *** FDKRUT WARNING TIME STEP CALCULATION FAILED TO CONVERGE. STABILITY PROBLEMS MAY RESULT

        *** FDKRUT WARNING TIME STEP CALCULATION FAILED TO CONVERGE. STABILITY PROBLEMS MAY RESULT

        *** FDKRUT WARNING TIME STEP CALCULATION FAILED TO CONVERGE. STABILITY PROBLEMS MAY RESULT

        *** FDKRUT WARNING TIME STEP CALCULATION FAILED TO CONVERGE. STABILITY PROBLEMS MAY RESULT

        *** FDKRUT WARNING TIME STEP CALCULATION FAILED TO CONVERGE. STABILITY PROBLEMS MAY RESULT

        *** FDKRUT WARNING TIME STEP CALCULATION FAILED TO CONVERGE. STABILITY PROBLEMS MAY RESULT

        *** FDKRUT WARNING TIME STEP CALCULATION FAILED TO CONVERGE. STABILITY PROBLEMS MAY RESULT

        *** FDKRUT WARNING TIME STEP CALCULATION FAILED TO CONVERGE. STABILITY PROBLEMS MAY RESULT

        *** FDKRUT WARNING TIME STEP CALCULATION FAILED TO CONVERGE. STABILITY PROBLEMS MAY RESULT

        *** FDKRUT WARNING TIME STEP CALCULATION FAILED TO CONVERGE. STABILITY PROBLEMS MAY RESULT

        *** FDKRUT WARNING TIME STEP CALCULATION FAILED TO CONVERGE. STABILITY PROBLEMS MAY RESULT

        *** FDKRUT WARNING TIME STEP CALCULATION FAILED TO CONVERGE. STABILITY PROBLEMS MAY RESULT

        *** FDKRUT WARNING TIME STEP CALCULATION FAILED TO CONVERGE. STABILITY PROBLEMS MAY RESULT

        *** FDKRUT WARNING TIME STEP CALCULATION FAILED TO CONVERGE. STABILITY PROBLEMS MAY RESULT
```

Routing effects are negligible.

```
*** HEC-1 ERROR 1 *** INVALID CARD IDENTIFICATION CODE OR CARD OUT OF SEQUENCE
    CARD NO.  252      *K     5-16

*** HEC-1 ERROR 1 *** INVALID CARD IDENTIFICATION CODE OR CARD OUT OF SEQUENCE
    CARD NO.  253      *M            REACH ROUTE FROM                    5-16

*** HEC-1 ERROR 1 *** INVALID CARD IDENTIFICATION CODE OR CARD OUT OF SEQUENCE
    CARD NO.  254      *K     2600  0.0056   0.012            TRAP      50       0
```

Ignore

```
                                   RUNOFF SUMMARY
                              FLOW IN CUBIC FEET PER SECOND
                           TIME IN HOURS,  AREA IN SQUARE MILES

                                        PEAK   TIME OF     AVERAGE FLOW FOR MAXIMUM PERIOD      BASIN
MAXIMUM      TIME OF
             OPERATION       STATION    FLOW    PEAK                                          AREA      STAGE
MAX STAGE
+                                                          6-HOUR     24-HOUR     72-HOUR
```

+	HYDROGRAPH AT	13	9.	12.08	1.	0.	0.	.01
+	DIVERSION TO	13.2	0.	12.08	0.	0.	0.	.01
+	HYDROGRAPH AT	13.1	8.	12.08	1.	0.	0.	.01
+	ROUTED TO	13.3	8.	12.08	1.	0.	0.	.01
+	HYDROGRAPH AT	13.2	0.	12.08	0.	0.	0.	.00
+	ROUTED TO	13.4	0.	12.25	0.	0.	0.	.00
+	HYDROGRAPH AT	14	21.	12.08	3.	1.	1.	.01
+	2 COMBINED AT	14.1	21.	12.08	3.	1.	1.	.01
+	DIVERSION TO	14.2	1.	12.08	0.	0.	0.	.01
+	HYDROGRAPH AT	14.1	21.	12.08	3.	1.	1.	.01
+	ROUTED TO	14.3	20.	12.08	3.	1.	1.	.01
+	HYDROGRAPH AT	15	53.	12.08	9.	2.	2.	.04
+	3 COMBINED AT	15.1	81.	12.08 30th Way	13.	4.	4.	.06
+	HYDROGRAPH AT	18	3.	12.08	0.	0.	0.	.00
+	2 COMBINED AT	18.1	84.	12.08	14.	4.	4.	.06
+	ROUTED TO	18-19	84.	12.08	14.	4.	4.	.06
+	HYDROGRAPH AT	17	15.	12.08 29th Street	2.	1.	1.	.01
+	HYDROGRAPH AT	19	4.	12.08	1.	0.	0.	.00
+	3 COMBINED AT	19.1	103.	12.08	17.	5.	4.	.08
+	ROUTED TO	19-20	103.	12.08	17.	5.	4.	.08
+	HYDROGRAPH AT	20	3.	12.08	0.	0.	0.	.00
+	2 COMBINED AT	20.1	106.	12.08	17.	5.	5.	.08
+	HYDROGRAPH AT	1	17.	12.08	3.	1.	1.	.01
+	DIVERSION TO	1.2	17.	12.08	3.	1.	1.	.01
+	HYDROGRAPH AT	1.2	0.	12.08	0.	0.	0.	.01
+	ROUTED TO	1-9	0.	12.58	0.	0.	0.	.01
+	HYDROGRAPH AT	9	44.	12.08	7.	2.	2.	.03
+	2 COMBINED AT	9.1	44.	12.08	7.	2.	2.	.04
+	ROUTED TO	RET1	43.	12.08	6.	2.	2.	.04
+								
1470.44	12.08							
+	ROUTED TO	9-10	43.	12.08	6.	2.	2.	.04

+	HYDROGRAPH AT	2	39.	12.08	6.	2.	2.	.03
+	HYDROGRAPH AT	1.3	17.	12.08	3.	1.	1.	.00
+	ROUTED TO	1-2	16.	12.08	3.	1.	1.	.00
+	2 COMBINED AT	2.1	55.	12.08	9.	2.	2.	.03
+	DIVERSION TO	2.2	55.	12.08	9.	2.	2.	.03
+	HYDROGRAPH AT	2.1	1.	12.08	0.	0.	0.	.03
+	ROUTED TO	2-10	1.	12.25	0.	0.	0.	.03
+	HYDROGRAPH AT	10	38.	12.08	6.	2.	2.	.03
+	3 COMBINED AT	10.1	82.	12.08	12.	3.	3.	.10
+	ROUTED TO	RET2	84.	11.83	10.	3.	3.	.10
+								
1468.68	11.83							
+	ROUTED TO	10-11	81.	12.08	9.	3.	3.	.10
+	HYDROGRAPH AT	2.2	55.	12.08	9.	2.	2.	.00
+	ROUTED TO	2-3	54.	12.08	9.	2.	2.	.00
+	HYDROGRAPH AT	3	59.	12.08	10.	3.	3.	.04
+	2 COMBINED AT	3.1	113.	12.08	19.	5.	5.	.04
+	DIVERSION TO	3.2	101.	12.08	17.	5.	5.	.04
+	HYDROGRAPH AT	3.1	12.	12.08	2.	0.	0.	.04
+	ROUTED TO	3-11	12.	12.17	2.	0.	0.	.04
+	HYDROGRAPH AT	14.3	1.	12.08	0.	0.	0.	.00
+	HYDROGRAPH AT	11	72.	12.08	12.	3.	3.	.05
+	4 COMBINED AT	11.1	165.	12.08	23.	6.	6.	.19
+	ROUTED TO	11-12	162.	12.08	23.	6.	6.	.19
+	HYDROGRAPH AT	3.3	101.	12.08	17.	5.	5.	.00
+	ROUTED TO	3-4	100.	12.08	17.	5.	5.	.00
+	HYDROGRAPH AT	4	97.	12.17	17.	5.	5.	.08
+	2 COMBINED AT	4.1	197.	12.08	34.	9.	9.	.08
+	DIVERSION TO	4.2	195.	12.08	34.	9.	9.	.08
+	HYDROGRAPH AT	4.1	1.	12.08	0.	0.	0.	.08
+	ROUTED TO	4-12	1.	12.50	0.	0.	0.	.08
+	HYDROGRAPH AT	12	83.	12.08	14.	4.	4.	.06

28th street
% = .33 / .71 = 46%

28th street

+	3 COMBINED AT	12.1	245.	12.08	37.	10.	10.	.33
+	2 COMBINED AT	20.2	350.	12.08	54.	15.	14.	.41
+	ROUTED TO	20-21	347.	12.08	54.	15.	14.	.41
+	HYDROGRAPH AT	4.2	195.	12.08	34.	9.	9.	.00
+	ROUTED TO	4-5	194.	12.08	34.	9.	9.	.00
+	HYDROGRAPH AT	5	226.	12.17	39.	11.	10.	.17
+	2 COMBINED AT	5.1	419.	12.08	73.	20.	19.	.17
+	DIVERSION TO	5.2	419.	12.08	73.	20.	19.	.17
+	HYDROGRAPH AT	5.1	0.	12.08	0.	0.	0.	.17
+	HYDROGRAPH AT	16	139.	12.08	24.	7.	6.	.11
+	2 COMBINED AT	16.1	139.	12.08	24.	7.	6.	.28
+	HYDROGRAPH AT	21	16.	12.08	3.	1.	1.	.01
+	3 COMBINED AT	21.1	503.	12.08	81.	22.	22.	.70
+	ROUTED TO	21-22	498.	12.08	81.	22.	22.	.70
+	HYDROGRAPH AT	22	15.	12.08	2.	1.	1.	.01
+	2 COMBINED AT	22.1	513.	12.08	83.	23.	22.	.71

29th street

Outlet @ Basin #3

1

SUMMARY OF KINEMATIC WAVE - MUSKINGUM-CUNGE ROUTING
(FLOW IS DIRECT RUNOFF WITHOUT BASE FLOW)

ISTAQ	ELEMENT	DT (MIN)	PEAK (CFS)	TIME TO PEAK (MIN)	VOLUME (IN)	INTERPOLATED TO COMPUTATION INTERVAL DT (MIN)	PEAK (CFS)	TIME TO PEAK (MIN)	VOLUME (IN)
13.3	MANE	2.23	8.28	728.34	2.26	5.00	8.13	725.00	2.26

CONTINUITY SUMMARY (AC-FT) - INFLOW= .7215E+00 EXCESS= .0000E+00 OUTFLOW= .7240E+00 BASIN STORAGE= .9088E-03
PERCENT ERROR= -.5

13.4	MANE	4.61	.25	738.02	-1.00	5.00	.24	735.00	-1.00
14.3	MANE	1.87	20.53	727.24	2.28	5.00	20.25	725.00	2.28

CONTINUITY SUMMARY (AC-FT) - INFLOW= .1824E+01 EXCESS= .0000E+00 OUTFLOW= .1827E+01 BASIN STORAGE= .1938E-02
PERCENT ERROR= -.2

18-19	MANE	.57	83.85	725.76	2.31	5.00	83.60	725.00	2.31

CONTINUITY SUMMARY (AC-FT) - INFLOW= .7502E+01 EXCESS= .0000E+00 OUTFLOW= .7502E+01 BASIN STORAGE= .2063E-03
PERCENT ERROR= .0

19-20	MANE	.36	102.98	725.31	2.31	5.00	102.84	725.00	2.31

CONTINUITY SUMMARY (AC-FT) - INFLOW= .9241E+01 EXCESS= .0000E+00 OUTFLOW= .9240E+01 BASIN STORAGE= .1166E-03
PERCENT ERROR= .0

1-9	MANE	5.00	.05	757.92	.01	5.00	.05	755.00	.01

CONTINUITY SUMMARY (AC-FT) - INFLOW= .4103E-02 EXCESS= .0000E+00 OUTFLOW= .3990E-02 BASIN STORAGE= .1615E-03
PERCENT ERROR= -1.2

9-10	MANE	.54	43.33	725.43	1.40	5.00	43.26	725.00	1.40

CONTINUITY SUMMARY (AC-FT) - INFLOW= .3206E+01 EXCESS= .0000E+00 OUTFLOW= .3206E+01 BASIN STORAGE= .1679E-03
PERCENT ERROR= .0

1-2	MANE	.74	16.58	726.08	-1.00	5.00	16.49	725.00	-1.00
2-10	MANE	5.00	.63	735.50	.04	5.00	.62	735.00	.04

CONTINUITY SUMMARY (AC-FT) - INFLOW= .5623E-01 EXCESS= .0000E+00 OUTFLOW= .5680E-01 BASIN STORAGE= .4943E-03
PERCENT ERROR= -1.9

10-11	MANE	.92	83.20	722.88	1.03	5.00	80.80	725.00	1.02

CONTINUITY SUMMARY (AC-FT) - INFLOW= .5373E+01 EXCESS= .0000E+00 OUTFLOW= .5403E+01 BASIN STORAGE= .6142E-02
PERCENT ERROR= -.7

2-3	MANE	.78	54.56	726.39	-1.00	5.00	54.12	725.00	-1.00
3-11	MANE	2.89	12.13	729.79	.36	5.00	12.12	730.00	.36

CONTINUITY SUMMARY (AC-FT) - INFLOW= .8284E+00 EXCESS= .0000E+00 OUTFLOW= .8334E+00 BASIN STORAGE= .2092E-02
PERCENT ERROR= -.9

11-12	MANE	.84	163.89	726.43	1.23	5.00	161.99	725.00	1.23

CONTINUITY SUMMARY (AC-FT) - INFLOW= .1265E+02 EXCESS= .0000E+00 OUTFLOW= .1264E+02 BASIN STORAGE= .7173E-02
PERCENT ERROR= .0

3-4	MANE	.70	100.68	726.12	-1.00	5.00	99.96	725.00	-1.00
4-12	MANE	5.00	1.42	746.45	.03	5.00	1.32	750.00	.03

CONTINUITY SUMMARY (AC-FT) - INFLOW= .1029E+00 EXCESS= .0000E+00 OUTFLOW= .1021E+00 BASIN STORAGE= .3334E-02
PERCENT ERROR= -2.4

20-21	MANE	.61	349.97	726.26	1.38	5.00	347.27	725.00	1.38

CONTINUITY SUMMARY (AC-FT) - INFLOW= .2980E+02 EXCESS= .0000E+00 OUTFLOW= .2980E+02 BASIN STORAGE= .1737E-02
PERCENT ERROR= .0

4-5	MANE	.67	195.28	726.31	-1.00	5.00	193.77	725.00	-1.00
21-22	MANE	.45	502.51	726.06	1.19	5.00	498.37	725.00	1.20

CONTINUITY SUMMARY (AC-FT) - INFLOW= .4447E+02 EXCESS= .0000E+00 OUTFLOW= .4447E+02 BASIN STORAGE= .1596E-02
PERCENT ERROR= .0

*** 3 ERROR(S) DETECTED BY HEC-1 ***

GROVERS AVENUE STORM DRAIN

FLOW RATING Table FOR SECTION NO. 1 30TH WAY

sta	elev	n
0	100.14	0.025
9	100.00	0.025
9	99.50	0.015
25	99.82	0.015
41	99.50	0.015
41	100.00	0.015
50	100.14	0.025

Relative Data Taken From the Survey Map

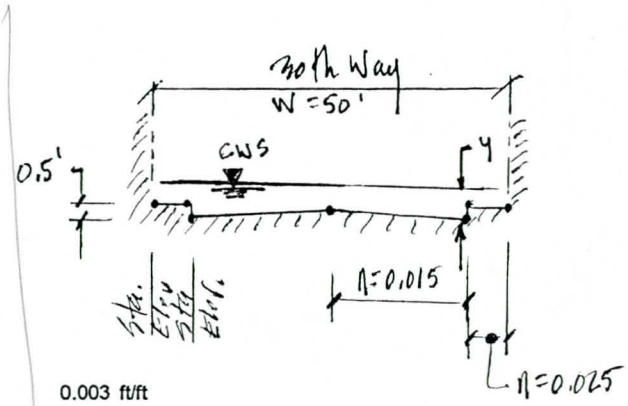

so = Street slope = Channel slope = 0.003 ft/ft

cws ft	y ft	a sq ft	p ft	r ft	k cfs	Q cfs	v fps		
99.5	0.0	0	0	0.00	0	0	0.00		
99.6	0.1	0.5	10.3	0.05	7	0	0.74		
99.7	0.2	2	20.6	0.1	43	2	1.17		
99.8	0.3	4.5	30.91	0.15	126	7	1.53		
99.9	0.4	7.68	33.21	0.23	294	16	2.10		
100.0	0.5	10.88	33.51	0.32	525	27.7 29	2.64	2.54 or 2.57	
100.1	0.6	14.72	45.86	0.32	812	44	3.02		
100.2	0.7	19.62	51.01	0.38	1171	64	3.27		
100.3	0.8	24.62	51.01	0.48	1599	88	3.56	0.070833	3.288685
100.4	0.9	29.62	51.01	0.58	2088	114	3.86	0.77	
100.5	1.0	34.62	51.01	0.68	2632	144	4.16		
100.6	1.1	39.62	51.01	0.78	3230	177	4.47		
100.7	1.2	44.62	51.01	0.87	3879	212	4.76		
100.8	1.3	49.62	51.01	0.97	4577	251	5.05		
100.9	1.4	54.62	51.01	1.07	5321	291	5.34		
101.0	1.5	59.62	51.01	1.17	6110	335	5.61		
101.1	1.6	64.62	51.01	1.27	6944	380	5.89		
101.2	1.7	69.62	51.01	1.36	7821	428	6.15		
101.3	1.8	74.62	51.01	1.46	8740	479	6.42		
101.4	1.9	79.62	51.01	1.56	9700	531	6.67		
101.5	2.0	84.62	51.01	1.66	10699	586	6.93		

$S_x = .02$

$S = .003$

$Q = \left(\frac{.56}{.015}\right)(.02)^{5/3}(.003)^{1/2}(32)^{8/3} = 31$

$V = \frac{1.49}{n} r^{2/3} S^{1/2} = 2.54$

Specify geometric data for curb inlet.

Variable	Description	Value	Unit
L =	Length of Inlet =	49.05	ft
w =	Width of Depression =	1.50	ft
a =	Depth of Depression =	2.00	in
h =	Height of Curb Opening =	5.00	in
CF =	Clogging Factor =	0.80	

→ Tab 3.2 of 3-16

Compute the water surface profile and inlet capacity using the Direct Step Method for steady state gradually varied flow.

GROVERS AVENUE STORM DRAIN

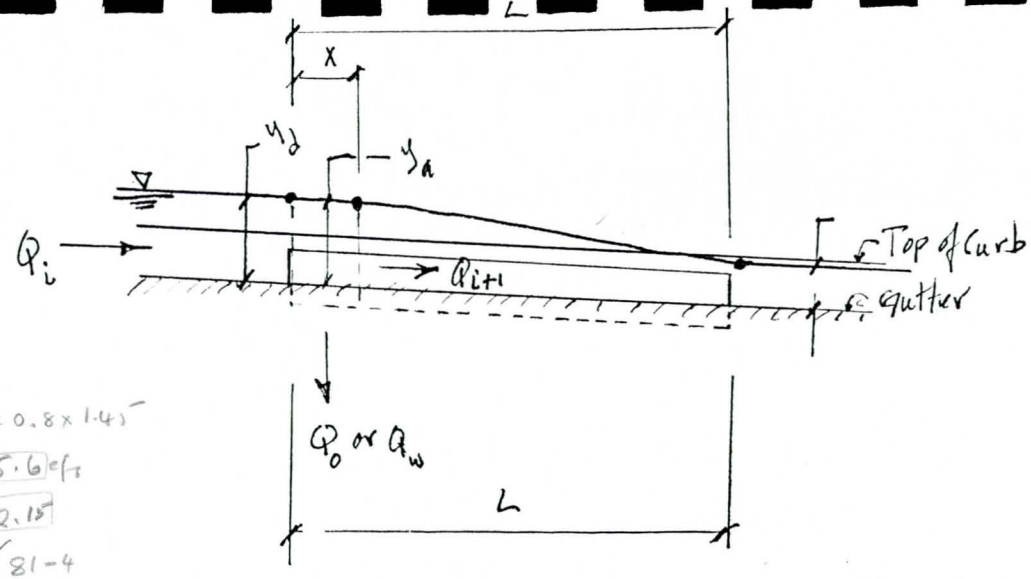

yu =	Select a normal flow depth =	0.77	ft
Q =	Select the starting street flow condition from the rating table =	81	cfs
su =	Select the starting friction slope from the table =	0.003	ft/ft
vu =	Select the velocity =	3	fps
Hu =	Compute the upstream specific head = yu + vu^2/2g =	0.94	ft
yd =	Select the next downstream flow depth =	0.7	ft
x =	Try a distance to next downstream depth =	1.45	ft
ya =	Average depth = (yd+yu)/2 =	0.735	ft
Le =	Effective Length of Inlet = x*CF =	1.16	ft
A =	Effective Open Area = Le * h/12 =	0.48	sq ft
Qw =	Weir flow HEC-12, Eq. 19, Pg. 73 = 2.3*(Le+1.8*w)*Ya^1.5 =	6	cfs
Qo =	Orifice flow HEC-12, Eq. 22,Pg. 76		
=	0.67*A*(2*32.2*(Ya+a/12-h/24))^.5 =	2	cfs
Qa =	Actual intercepted flow = 2[The less of Qw or Qo] =	4	cfs
Q =	Compute the next downstream street flow = Q - Qa =	77	cfs
a =	Select the area for the next downstream flow depth from the rating table		
=		19.62	sq ft
vd =	Compute the downstream velocity = Q/a =	3.91	fps
Hd =	Compute the downstream specific head = yd + vd^2/2g =	0.94	ft
k =	Select the conveyance for the next downstream flow depth from the rating table		
=		1171	cfs
sd =	Compute the friction slope at the next downstream section		
=	(Q/k)^2 =	0.004289	ft/ft
sa =	Compute the average friction slope = (sd + su)/2 =	0.003645	ft/ft
x =	Compute the actual distance = (Hd - Hu)/(so - sa) =	1.45	ft
err(x) =	Compute the error between the trial and actual distance = x - x =	-0.00	ft

h = 5in.
W = 1.5 ft
✓ = 0.8 x 1.45
5.6 cfs
2 => from sides of roadway
2.15
✓
= 81 - 4
.94 - .94

Compute the water surface profile.

yd ft	x ft	L	ya ft	Le ft	A sq ft	Qw cfs	Qo	Qa cfs	Q cfs	a	vd fps	Hd ft	k	sd	sa ft/ft	x ft	err(x) ft
0.77		0.00							81	?19.62?	3.29	0.94		0.00300			
0.70	1.45	1.45	0.735	1.16	0.48	6	2	4	77	19.62	3.91	0.94	1171	0.00429	0.00364	1.45	0.00
0.60	3.20	4.65	0.65	2.56	1.07	6	4	9	68	14.72	4.60	0.93	812	0.00696	0.00562	3.20	-0.00
0.50	5.02	9.67	0.55	4.02	1.67	6	6	13	55	10.88	5.07	0.90	525	0.01103	0.00899	5.02	0.00
0.40	12.77	22.44	0.45	10.21	4.26	9	15	18	37	7.68	4.84	0.76	294	0.01603	0.01353	12.77	-0.00
0.30	26.61	49.05	0.35	21.29	8.87	11	26	23	14	4.50	3.19	0.46	126	0.01300	0.01451	26.61	-0.00
0.20	34.74	83.79	0.25	27.79	11.58	9	28	18	-3	2.00	-1.59	0.24	43	0.00558	0.00929	34.74	0.00
0.10	0.00	83.79	0.15	0.00	0.00	0	0	0	-3	0.50	-6.37	0.73	7	0.22489	0.11523	-4.38	-4.38

to be captured by grate inlet.

SOLVE FOR GRATED INLET IN SUMP CONDITION:

Variable	Description	Value	Unit
Q =	Design Flow =	14	cfs
Y =	Sump Depth =	0.30	ft

GROVERS AVENUE STORM DRAIN

L =	Length of grate =	28	ft
w =	Width of grate =	2.00	ft
P =	Perimeter length of grate = 2 (L + w) =	60.00	ft
CF =	Clogging Factor =	0.50	
A =	Effective Open Area =	30.00	sq ft
Le =	Effective Length of Inlet = P*CF =	30.00	ft
Qw =	HEC-12, Eq. 17, Pg. 69 = 3*Le*Y^1.5 =	15	cfs 14.8
Qo =	HEC-12, Eq. 18, Pg. 69 = 0.67*A*(2*32.2*Y)^.5 =	88	cfs
Qc =	Capacity = The less of Qw or Qo =	15	cfs
Qe =	Excess capacity = Qc - Q =	0	cfs

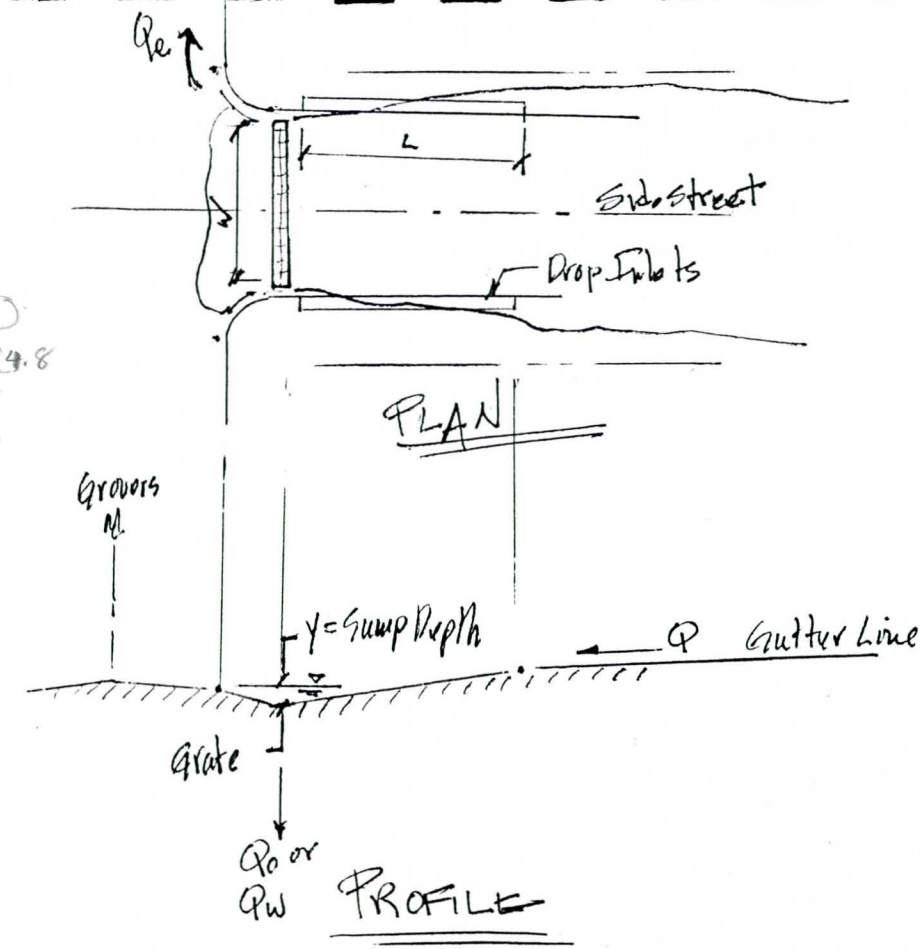

-39-

GROVERS AVENUE STORM DRAIN

FLOW RATING Table FOR SECTION NO. 1 29TH ~~WAY~~ Street

Drainage of Highway Pavements, Hydraulic Engineering Circular No. 12,
Federal Highway Administration, March 1984.

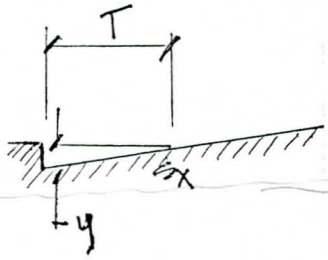

Variable	Description	Unit	Value
I =	Inlet Number =		1
S =	Street Slope =	ft/ft	0.00300
Sx =	Street Cross Slope =	ft/ft	0.020
N =	N-Value =		0.012 .015
Q =	Design Flow =	cfs	7.50

Each side of roadway is Q total = 15 cfs.

Type of Inlet:

Slotted Drain Data:

L =	Length of Inlet =	ft	0.00
CF =	Clogging Factor =		0.80

Curb Inlet Data:

L =	Length of Inlet =	ft	20.00
a =	Depth of Depression =	in	2.00
w =	Width of Depression =	ft	1.50
CF =	Clogging Factor =		0.80

Grated Inlet Data

w =	Width of Grate =	ft	0.00
CF =	Clogging Factor =		0.80

Slotted Drain:

Qa =	Approach Flow =	cfs	7.50
Y =	Approach Depth to Inlet (Eq. 4, Pg. 22) = (Qa*N*Sx/0.56/S^.5)^(3/8) = ? ok.	ft	0.35 ✓
T =	Approach Width to Inlet (Eq. 5, Pg. 22) = Y/Sx =	ft	17.26 ✓
V =	Approach Velocity to Inlet from Eq. 4, Pg. 22 = Qa/a =1.12*S^.5*Y^.67/N =	fps	2.51
Le =	Effective Length of Inlet = L*CF =	ft	0.00
Lt =	Theoretical Length (Eq. 13, Pg. 59 & Chart 9) = .6*Qa^.42*S^.3*(1/N/Sx)^.6 =	ft	36.37
E =	Interception Efficiency (Eq. 14, Pg. 60 & Chart 10) = 1-(1-Le/Lt)^1.8 =		0.00
Qi =	Intercepted Flow = Qa*E =	cfs	0.00
Qf =	Flow-by = Qa - Qi =	cfs	7.50

$Q_a = \left(\frac{K}{n}\right) S_x^{5/3} S^{1/2} T^{8/3}$

$T = \left(\frac{Q_a N}{K S_x^{5/3} S^{1/2}}\right)^{3/8} = \left[\frac{Q_a N}{0.56\, S_x^{5/3} S^{1/2}}\right]^{3/8}$

$T^{8/3} = \frac{7.5 \times 0.012}{0.56 \times (0.02)^{5/3} (0.003)^{1/2}}$

$T^{8/3} = 1991.18$

$T = 17.26$

$Y = 17.26 \times 0.02 = 0.35$

$V = \frac{Q}{A} = \frac{7.5}{\frac{0.35 \times 17.26}{2}} = 2.5$

Curb Inlet:

Qa =	Approach Flow =	cfs	7.50 ✓
Sw =	Depression Slope (Eq. 15, Pg. 60)= a/w/12 =	ft/ft	0.111 ✓
Y =	Approach Depth to Inlet (Eq. 4, Pg. 22) = (Qa*N*Sx/0.56/S^.5)^(3/8) =	ft	0.35 ✓
T =	Approach Width to Inlet (Eq. 5, Pg. 22) = Y/Sx =	ft	17.26 ✓
Eo =	Frontal Flow Ratio (Eq. 7, Pg. 54)		

MORRISON-MAIERLE/CSSA, INC. 06-Jan-90

GROVERS AVENUE STORM DRAIN

= 1-(1-w/T)^2.67 =		0.22	0.215
Se = Composite Slope (Eq. 15)= Sx + Sw*Eo =	ft/ft	0.04	0.044
V = Approach Velocity to Inlet from Eq. 4, Pg. 22			
= 1.12*S^.5*Y^.67/N =	fps	2.51	2.53
Le = Effective Length of Inlet = L*CF =	ft	16.00	→ 20×0.8
Lt = Theoretical Length (Eq. 13, Pg. 59 & Chart 9)			
= .6*Qa^.42*S^.3*(1/N/Se)^.6 =	ft	22.68	→ 0.6 × (7.5)^0.42 (0.003)^1/3 (1/(0.012×0.02))^0.6 → 23.99
E = Interception Efficiency (Eq. 14, Pg. 60 & Chart 10)			
= 1-(1-Le/Lt)^1.8 =		0.89	
Qi = Intercepted Flow = Qa*E =	cfs	6.67	ok (use Se = 0.044)
Qf = Flow-by = Qa - Qi =	cfs	0.83	

Grated Inlet:

Qa = Approach Flow =	cfs	0.83	
Y = Approach Depth to Inlet (Eq. 4, Pg. 22)			
= (Qa*N*Sx/0.56/S^.5)^(3/8) =	ft	0.15	
T = Approach Width to Inlet (Eq. 5, Pg. 22)			
= Y/Sx =	ft	7.56	
Eo = Frontal Flow Ratio (Eq. 7, Pg. 54)			Not Used
= 1-(1-w/T)^2.67 =		0.00	
Qi = Intercepted Flow = Qa*Eo*CF =	cfs	0.00	
Qf = Flow-by = Qa - Qi =	cfs	0.83	

Summary for Inlets On-Grade Condition:

Inlet	No.	Value
Design Flow	cfs	7.50
Inlet Capacity	cfs	6.67
Flow-by	cfs	0.83

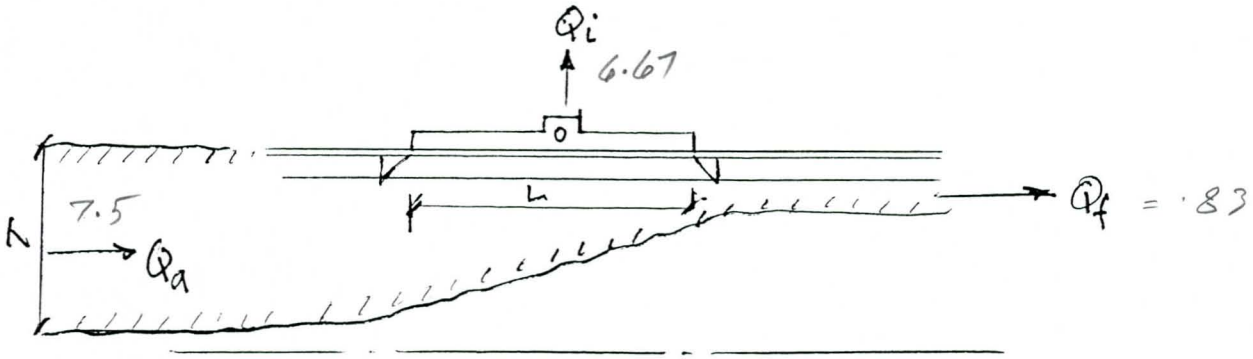

GROVERS AVENUE STORM DRAIN

FLOW RATING Table FOR SECTION NO. 1 28TH STREET

sta	elev	n
0.0	100.30	0.03
20.8	100.00	0.03
20.8	99.50	0.02
40.0	99.88	0.02
60.8	99.50	0.02
60.8	100.00	0.02
80	100.3	0.025

so = Street slope = Channel slope = 0.003 ft/ft

cws ft	y ft	a sq ft	p ft	r ft	k cfs	Q cfs	v fps	
99.5	0	0	0	0.00	0	0	0.00	
99.6	0.1	0.53	10.83	0.05	7	0	0.73	
99.7	0.2	2.11	21.66	0.10	45	2	1.17	
99.8	0.3	4.74	32.49	0.15	132	7	1.53	
99.9	0.4	8.40	41.21	0.20	294	16	1.92	
100.0	0.5	12.40	41.51	0.30	563	31	2.49	
100.1	0.6	17.07	54.34	0.31	902	49	2.89	
100.2	0.7	23.07	67.68	0.34	1324	73	3.14	
100.3	0.8	30.40	81.01	0.38	1839	101	3.31	
100.4	0.9	38.40	81.01	0.47	2475	136	3.53	
100.5	1.0	46.40	81.01	0.57	3202	175	3.78	
100.6	1.1	54.40	81.01	0.67	4014	220	4.04	
100.7	1.2	62.40	81.01	0.77	4906	269	4.31	4.174019 (interpolated)
100.8	1.3	70.40	81.01	0.87	5875	322	4.57	
100.9	1.4	78.40	81.01	0.97	6916	379	4.83	
101.0	1.5	86.40	81.01	1.07	8028	440	5.09	
101.1	1.6	94.40	81.01	1.17	9207	504	5.34	
101.2	1.7	102.40	81.01	1.26	10453	573	5.59	
101.3	1.8	110.40	81.01	1.36	11764	644	5.84	
101.4	1.9	118.40	81.01	1.46	13137	720	6.08	
101.5	2.0	126.40	81.01	1.56	14572	798	6.31	

Specify geometric data for curb inlet.

Variable	Description	Value	Unit
L =	Length of Inlet =	~~10.00 ft~~ 93	ft
w =	Width of Depression =	1.50	ft
a =	Depth of Depression =	2.00	in
h =	Height of Curb Opening =	5.00	in
CF =	Clogging Factor =	0.80	

Compute the water surface profile and inlet capacity using the Direct Step Method for steady state gradually varied flow.

GROVERS AVENUE STORM DRAIN

yu =	Select a normal flow depth =	1.15	ft
Q =	Select the starting street flow condition from the rating table =	245	cfs
su =	Select the starting friction slope from the table =	0.003	ft/ft
vu =	Select the velocity =	4.17	fps
Hu =	Compute the upstream specific head = yu + vu^2/2g =	1.42	ft
yd =	Select the next downstream flow depth =	1	ft
x =	Try a distance to next downstream depth =	1.13	ft
ya =	Average depth = (yd+yu)/2 =	1.075	ft
Le =	Effective Length of Inlet = x*CF =	0.90	ft
A =	Effective Open Area = Le * h/12 =	0.38	sq ft
Qw =	Weir flow HEC-12, Eq. 19, Pg. 73 = 2.3*(Le+1.8*w)*Ya^1.5 =	9	cfs
Qo =	Orifice flow HEC-12, Eq. 22,Pg. 76		
=	0.67*A*(2*32.2*(Ya+a/12-h/24))^.5 =	2	cfs
Qa =	Actual intercepted flow = 2[The less of Qw or Qo] =	4	cfs
Q =	Compute the next downstream street flow = Q - Qa =	241	cfs
a =	Select the area for the next downstream flow depth from the rating table		
=		46.40	sq ft
vd =	Compute the downstream velocity = Q/a =	5.19	fps
Hd =	Compute the downstream specific head = yd + vd^2/2g =	1.42	ft
k =	Select the conveyance for the next downstream flow depth from the rating table		
=		3202	cfs
sd =	Compute the friction slope at the next downstream section		
=	(Q/k)^2 =	0.00566	ft/ft
sa =	Compute the average friction slope = (sd + su)/2 =	0.00433	ft/ft
x =	Compute the actual distance = (Hd - Hu)/(so - sa) =	1.13	ft
err(x) =	Compute the error between the trial and actual distance = x - x =	0.00	ft

Need Q = 245 cfs y b/n 1.1 and 1.2

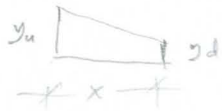

$= 2.3(0.9 + 1.8 \times 1.5) \times 1.075^{1.5} = 9.23$

2.07 ok

Check for $y_d = 0.5$ $y_d = 0.4$ $X = 23.92$

$y_u = 0.5$, $y_d = 0.4$ } $y_a = 0.45$ ft. $W = 1.5$ $h = 5$

$L_e = 23.92 \times 0.8 = 19.1$

$A = L_e * \frac{h}{12} = 19.1 \times \frac{5}{12} = 8.0$ ft²

$Q_w = 2.3(19.1 + 1.8 \times 1.5) \times 0.45^{1.5} = 15.1$ ok.

$Q_o = 0.67 \times 8 \left(64.4\left(0.45 + \frac{2}{12} - \frac{5}{24}\right)\right)^{0.5} = 27.5$ ok.

$Q_a = 2 \times 15 = 30$

Compute the water surface profile.

yd ft	x ft	L	ya ft	Le ft	A sq ft	Qw cfs	Qo	Qa cfs	Q cfs	a	vd fps	Hd ft	k	sd	sa ft/ft	x ft	err(x) ft
1.15		0.00							245		4.17	1.42		0.00300			
1.00	1.13	1.13	1.075	0.90	0.38	9	2	4	241	46.40	5.19	1.42	3202	0.00566	0.00433	1.13	0.00
0.90	7.23	8.36	0.95	5.79	2.41	18	12	25	216	38.40	5.63	1.39	2475	0.00763	0.00665	7.23	-0.00
0.80	12.19	20.55	0.85	9.75	4.06	22	20	39	177	30.40	5.82	1.33	1839	0.00925	0.00844	12.19	0.00
0.70	14.33	34.88	0.75	11.46	4.78	21	22	42	135	23.07	5.83	1.23	1324	0.01033	0.00979	14.33	-0.00
0.60	16.18	51.06	0.65	12.95	5.39	19	23	38	97	17.07	5.68	1.10	902	0.01154	0.01093	16.18	-0.00
0.50	17.55	68.61	0.55	14.04	5.85	16	22	31	65	12.40	5.28	0.93	563	0.01354	0.01254	17.55	-0.00
0.40	23.92	92.53	0.45	19.13	7.97	15	27	30	35 36	8.40	4.18	0.67	294	0.01429	0.01391	23.92	-0.00
0.30	24.41	116.94	0.35	19.52	8.14	11	24	21	14	4.74	2.95	0.43	132	0.01112	0.01270	24.41	-0.00
0.20	15.87	132.81	0.25	12.70	5.29	4	13	9	5	2.11	2.43	0.29	45	0.01297	0.01205	15.87	-0.00
0.10	16.97	149.78	0.15	13.58	5.66	2	10	4	1	0.53	1.45	0.13	7	0.01174	0.01236	16.97	-0.00

SOLVE FOR GRATED INLET IN SUMP CONDITION:

Variable	Description	Value	Unit
Q =	Design Flow =	35	cfs (36)
Y =	Sump Depth =	0.50	ft

GROVERS AVENUE STORM DRAIN

L =	Length of grate =	36	ft
w =	Width of grate =	2.00	ft
P =	Perimeter length of grate = 2 (L + w) =	76.00	ft
CF =	Clogging Factor =	0.50	
A =	Effective Open Area =	38.00	sq ft
Le =	Effective Length of Inlet = P*CF =	38.00	ft
Qw =	HEC-12, Eq. 17, Pg. 69 = 3*Le*Y^1.5 =	40	cfs
Qo =	HEC-12, Eq. 18, Pg. 69 = 0.67*A*(2*32.2*Y)^.5 =	144	cfs
Qc =	Capacity = The less of Qw or Qo =	40	cfs
Qe =	Excess capacity = Qc - Q =	5	cfs

28.8

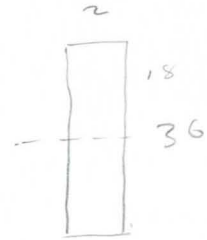

$P = 2(36+2) = 76$

with CF = 50%

$P_e = 18 + 18 + 2 + 2 = 40$

-44-

GROVERS AVENUE STORM DRAIN

FLOW RATING Table FOR SECTION NO. 1 26TH STREET

sta	elev	n
0	100.15	0.025
10	100.00	0.025
10	99.50	0.015
30	99.90	0.015
50	99.50	0.015
50	100.00	0.015
60	100.15	0.025

so = Street slope = Channel slope = 0.003 ft/ft

cws ft	y ft	a sq ft	p ft	r ft	k cfs	Q cfs	v fps	
99.5	0	0.00	0.00	0.00	0	0	0.00	
99.6	0.10	0.50	10.30	0.05	7	0	0.74	
99.7	0.20	2.00	20.60	0.10	43	2	1.17	
99.8	0.30	4.50	30.91	0.15	126	7	1.53	
99.9	0.40	8.00	41.21	0.19	271	15	1.86	
100.0	0.50	12.00	41.51	0.29	533	29	2.43	
100.1	0.60	16.67	54.34	0.31	866	47	2.84	
100.2	0.70	22.50	61.01	0.37	1285	70	3.13	
100.3	0.80	28.50	61.01	0.47	1790	98	3.44	
100.4	0.90	34.50	61.01	0.57	2369	130	3.76	→ need 139 cfs.
100.5	1.00	40.50	61.01	0.66	3017	165	4.08	0.3 3.857039
100.6	1.10	46.50	61.01	0.76	3730	204	4.39	
100.7	1.20	52.50	61.01	0.86	4505	247	4.70	
100.8	1.30	58.50	61.01	0.96	5340	292	5.00	
100.9	1.40	64.50	61.01	1.06	6232	341	5.29	
101.0	1.50	70.50	61.01	1.16	7179	393	5.58	
101.1	1.60	76.50	61.01	1.25	8181	448	5.86	
101.2	1.70	82.50	61.01	1.35	9234	506	6.13	
101.3	1.80	88.50	61.01	1.45	10339	566	6.40	
101.4	1.90	94.50	61.01	1.55	11494	630	6.66	
101.5	2.00	100.50	61.01	1.65	12698	696	6.92	

Specify geometric data for curb inlet.

Variable	Description	Value	Unit
L =	Length of Inlet =	56.53	ft
w =	Width of Depression =	1.50	ft
a =	Depth of Depression =	2.00	in
h =	Height of Curb Opening =	5.00	in
CF =	Clogging Factor =	0.80	

Compute the water surface profile and inlet capacity using the Direct Step Method for steady state gradually varied flow.

GROVERS AVENUE STORM DRAIN

yu =	Select a normal flow depth =	0.93	ft
Q =	Select the starting street flow condition from the rating table =	139	cfs
su =	Select the starting friction slope from the table =	0.003	ft/ft
vu =	Select the velocity =	3.86	fps
Hu =	Compute the upstream specific head = yu + vu^2/2g =	1.16	ft
yd =	Select the next downstream flow depth =	0.8	ft
x =	Try a distance to next downstream depth =	0.53	ft
ya =	Average depth = (yd+yu)/2 =	0.865	ft
Le =	Effective Length of Inlet = x*CF =	0.42	ft
A =	Effective Open Area = Le * h/12 =	0.18	sq ft
Qw =	Weir flow HEC-12, Eq. 19, Pg. 73 = 2.3*(Le+1.8*w)*Ya^1.5 =	6	cfs 5.8
Qo =	Orifice flow HEC-12, Eq. 22,Pg. 76		
=	0.67*A*(2*32.2*(Ya+a/12-h/24))^.5 =	1	cfs 0.88
Qa =	Actual intercepted flow = 2[The less of Qw or Qo] =	2	cfs 1.75
Q =	Compute the next downstream street flow = Q - Qa =	137	cfs 137.2
a =	Select the area for the next downstream flow depth from the rating table		
=		28.50	sq ft
vd =	Compute the downstream velocity = Q/a =	4.82	fps
Hd =	Compute the downstream specific head = yd + vd^2/2g =	1.16	ft
k =	Select the conveyance for the next downstream flow depth from the rating table		
=		1790	cfs
sd =	Compute the friction slope at the next downstream section		
=	(Q/k)^2 =	0.00588	ft/ft
sa =	Compute the average friction slope = (sd + su)/2 =	0.00444	ft/ft
x =	Compute the actual distance = (Hd - Hu)/(so - sa) =	0.53	ft
err(x) =	Compute the error between the trial and actual distance = x - x =	0.00	ft

Compute the water surface profile.

yd ft	x ft	L	ya ft	Le ft	A sq ft	Qw cfs	Qo	Qa cfs	Q cfs	a	vd fps	Hd ft	k	sd	sa ft/ft	x ft	err(x) ft
0.93		0.00							139		3.86	1.16		0.00300			
0.80	0.53	0.53	0.865	0.42	0.18	6	1	2	137	28.50	4.82	1.16	1790	0.00588	0.00444	0.53	0.00
0.70	6.04	6.57	0.75	4.83	2.01	11	9	18	119	22.50	5.29	1.13	1285	0.00858	0.00723	6.04	0.00
0.60	11.44	18.01	0.65	9.15	3.81	14	16	29	90	16.67	5.43	1.06	866	0.01092	0.00975	11.44	0.00
0.50	15.67	33.68	0.55	12.53	5.22	14	20	29	62	12.00	5.16	0.91	533	0.01350	0.01221	15.67	0.00
0.40	22.85	56.53	0.45	18.28	7.62	15	26	29	33	8.00	4.10	0.66	271	0.01461	0.01406	22.85	0.00
0.30	21.89	78.42	0.35	17.51	7.30	10	22	19	14	4.50	3.00	0.44	126	0.01153	0.01307	21.89	0.00
0.20	15.22	93.64	0.25	12.18	5.07	4	12	9	5	2.00	2.48	0.30	43	0.01348	0.01250	15.22	-0.00
0.10	16.32	109.97	0.15	13.06	5.44	2	10	4	1	0.50	1.49	0.13	7	0.01224	0.01286	16.32	0.00

SOLVE FOR GRATED INLET IN SUMP CONDITION:

Variable	Description	Value	Unit
Q =	Design Flow =	33	cfs
Y =	Sump Depth =	0.50	ft

GROVERS AVENUE STORM DRAIN

L =	Length of grate =	36	ft
w =	Width of grate =	2.00	ft
P =	Perimeter length of grate = 2 (L + w) =	76.00	ft
CF =	Clogging Factor =	0.50	
A =	Effective Open Area =	38.00	sq ft
Le =	Effective Length of Inlet = P*CF =	38.00	ft
Qw =	HEC-12, Eq. 17, Pg. 69 = 3*Le*Y^1.5 =	40	cfs
Qo =	HEC-12, Eq. 18, Pg. 69 = 0.67*A*(2*32.2*Y)^.5 =	144	cfs
Qc =	Capacity = The less of Qw or Qo =	40	cfs
Qe =	Excess capacity = Qc - Q =	8	cfs

-42-

GROVERS AVENUE STORM DRAIN

Compute the hydraulic profile for the inlet connector pipe.

RE: Storm Drain Design Manual, City of Phoenix, 1987, Pages 18, 31-34.

Design data.

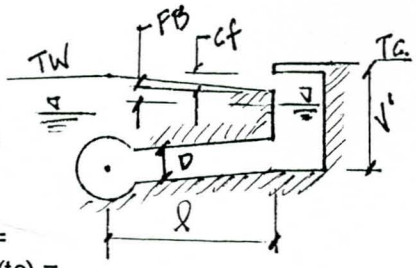

Location:	play	
Pipe material:	cmp	ok
Mannings N-Value, n =	0.024	
Pipe diameter (D) =	36	In
Pipe Length (l) =	44	Ft
Pipe Slope at Inlet (s) =	0.40000	Ft/Ft
Top of Curb Elevation (tc) =	100.00	Ft
Curb Face Opening (cf) =	8	In
Pipe Diameter, d =	3.00	Ft
Deflection Angle, angle = arctan (s) =	21.80	Deg
Inlet Diameter, di = d / cos (angle) = FB?	3.23	Ft
Maximum Crown Elevation (MaxCEi) = tc - cf/12 - .5 =	98.83	
Crown Elevation at Inlet (CEi) =	98.00	ft
Inlet Invert Elevation (ELi) =	94.77	Ft
Design Flow (Q) =	55.00	cfs
Tailwater Elevation (Tw) =	95.00	Ft

? 98.0 - 3.23 = 94.77 ?

Compute flow assuming outlet control.

Velocity, v = Q / (¶(d/12)²/4) =	7.78	Fps ✓
Velocity Head, hv = v²÷2g =	0.93	Ft ✓
Friction Slope, Sf = 4.66 * n² * Q² ÷ (d^(16/3)) =	0.02317	Ft/Ft ✓
Entrance Loss Coeficient, Ke =	0.50	✓
Exit Loss Coeficient, Ko =	1	✓
Pipe Loss, hp = Sf * l =	1.02	Ft ✓
Entrance Loss, he = Ke * hv =	0.46	Ft ✓
Exit Loss, ho = Ko * hv =	0.93	Ft ✓
Total Friction Loss, H = hp + he + ho =	2.41	Ft ✓
Headwater Elevation, Hwo = Tw + H =	97.41	Ft ✓

Compute flow assuming inlet control using HEC-12.

Square Edged Headwall		
Q =	55.00	cfs
x = Q / d^2.5 =	3.53	
Hw/d =	1.12	Ft/Ft
Hwi = Hw * d + ELi =	98.14	Ft

CALCULATE FREEBOARD AND DEPTH OF BASIN:

Controlling Headwater Condition (Max. of Hwo or Hwi), HW =	98.14	Ft ✓
Freeboard, FB = tc - cf÷12 - HW = 100 - 8/12 - 98.14 =	1.19	Ft ✓
100 - 8/12 - 98.14		
Minimum Allowable Drop Inlet Depth, V' = tc - ELi + 2/12 =	5.40	Ft ✓
100 - 94.77 + 2"/12		

MORRISON-MAIERLE/CSSA, INC. 06-Jan-90

GUTTER TRANSITION	
CURB HEIGHT	DIM. 'A'
~~4"~~	~~3'-3"~~
~~5"~~	~~2'-6"~~
✓ 6"	1'-9"

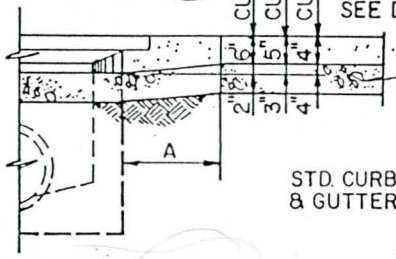

DEPRESSED GUTTER TRANSITION (BOTH SIDES)

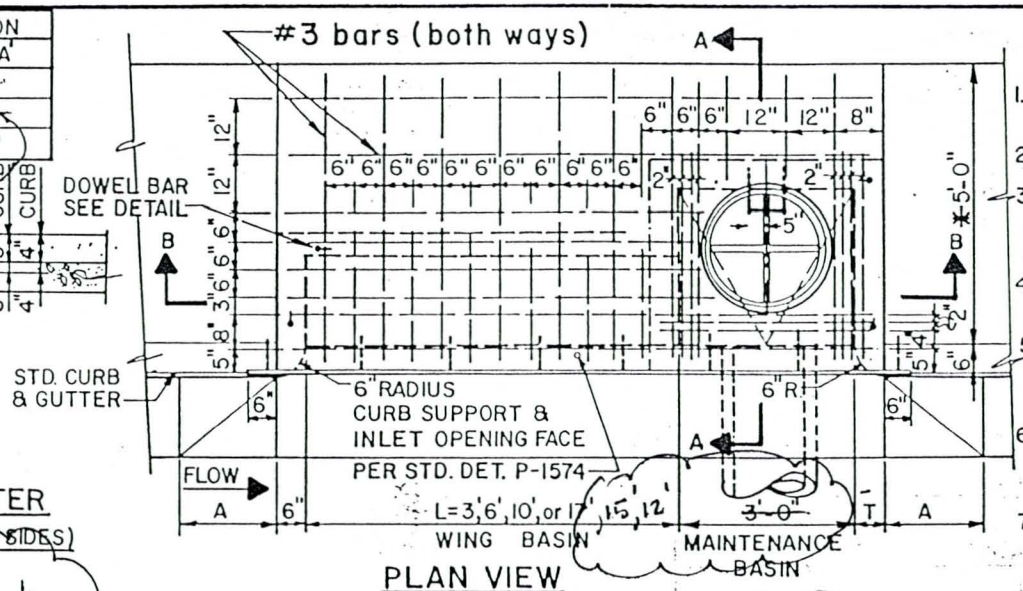

PLAN VIEW

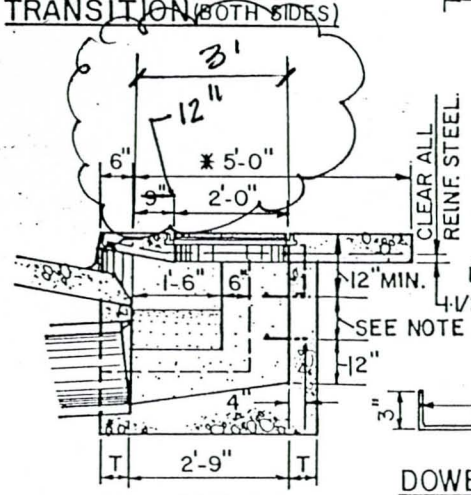

SECTION A-A

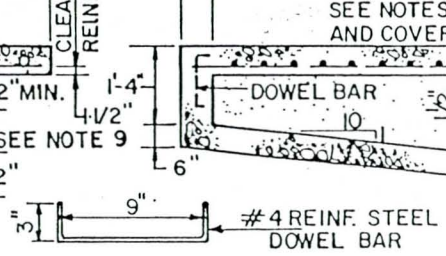

DOWEL BAR DETAIL

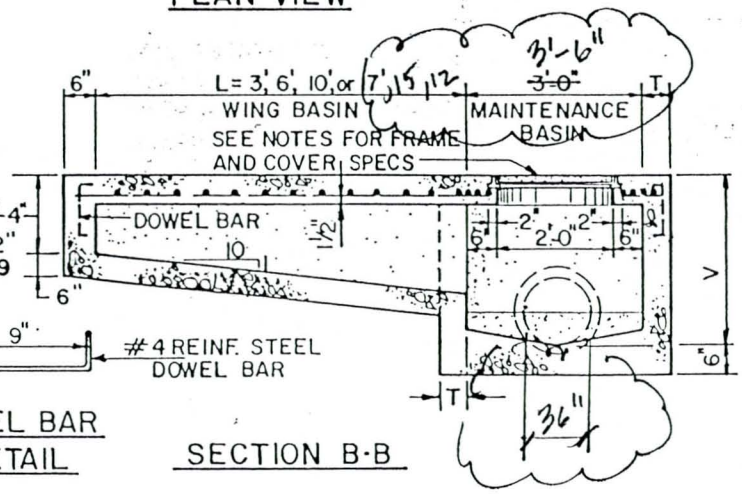

SECTION B-B

NOTES

1. TYPES ARE DESIGNATED AS FOLLOWS: 'M' - NO WING, 'M-1' - ONE WING, 'M-2' - TWO WINGS.
2. ALL CONCRETE SHALL BE CLASS 'A'.
3. ALL REINFORCING STEEL SHALL BE DEFORMED BARS AND SHALL CONFORM TO A.S.T.M. SPECIFICATION 615.
4. CONNECTOR PIPES SHALL BE PLACED IN THE APPROPRIATE WALL OF THE MAINTENANCE BASIN.
5. FLOOR OF BASIN SHALL BE TROWELLED TO A HARD, SMOOTH SURFACE AND SHALL SLOPE FROM ALL DIRECTIONS TO OUTLET.
6. CONSTRUCTION DRAINS SHALL BE INSTALLED IN ALL INLETS BUILT WITH PAVING PROJECTS. (SEE DET. P-1575.)
7. LOCATE WING BASIN ON UPSTREAM SIDE OF MAINTENANCE BASIN FOR TYPE M-1. WING BASINS FOR TYPE M-2 SHALL BE BOTH SIDES OF MAINTENANCE BASIN.
8. STEPS (M.A.G. DET. 428 POLYPROPYLENE) – V=3' (INCL.), PLACE ONE STEP 12" ABOVE THE FLOOR OF THE BASIN. V OVER 3', PLACE STEPS AT 12" INTERVALS FROM THE FLOOR OF THE BASIN WITH THE TOP STEP AT 12" (MIN.) BELOW THE TOP OF THE GRATE.
9. ACCESS FRAME AND COVER PER DET. P-1561

CATCH BASIN WALL THICKNESS
~~T=6" IF V=4' OR LESS~~
✓ T=8" IF V=4' TO 8'
~~(IF V EXCEEDS 8'~~, SPECIAL DESIGN IS REQUIRED.)
L=0 UNLESS SPECIFIED ON THE PLANS
V=3'-6" MIN. WHEN L=0: 3' OR 6'
V=4'-0" MIN. WHEN L=10' OR 17'

✱ 4'-0" IN LOCATIONS WHERE 4' SIDEWALK IS REQ'D.

DETAIL NO.	CITY OF PHOENIX STANDARD DETAIL	CATCH BASIN TYPE 'M'	APPROVED	DETAIL NO.
P-1569			CITY ENGINEER 4/28/81 DATE	P-1569

Modified

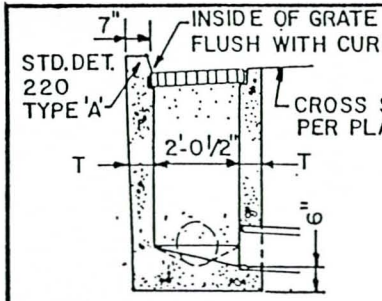

'N' CATCH BASIN IN VERTICAL CURB & GUTTER

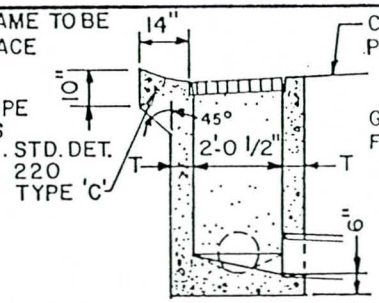

'N' CATCH BASIN IN ROLL CURB & GUTTER

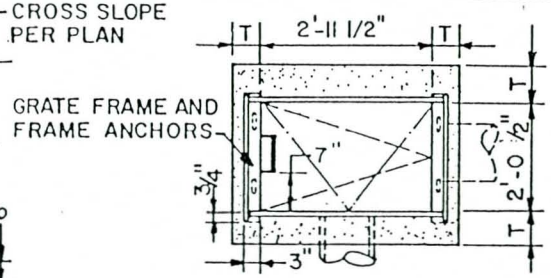

SINGLE CATCH BASIN PLAN

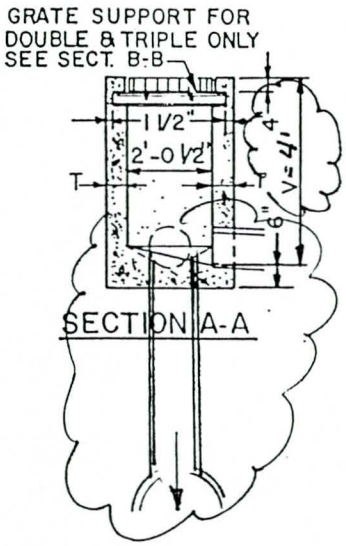

SECTION A-A

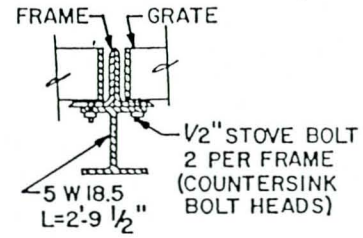

SECTION B-B

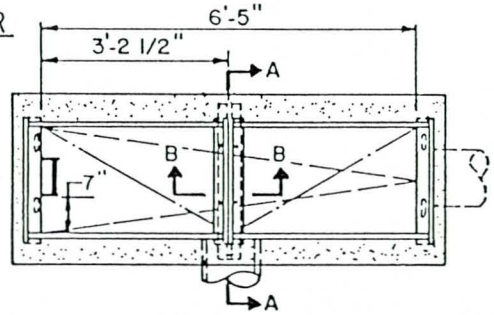

DOUBLE CATCH BASIN PLAN

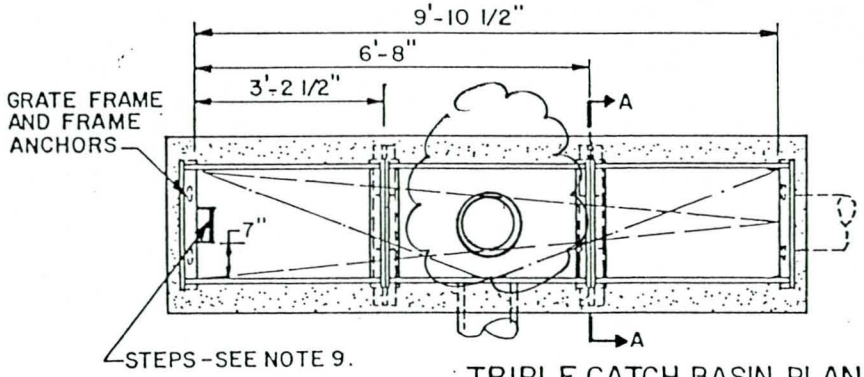

TRIPLE CATCH BASIN PLAN

NOTES

1. ALL CONCRETE SHALL BE CLASS 'A'
2. CONNECTOR PIPES MAY BE PLACED IN ANY WALL AS PER PLAN.
3. FLOOR OF BASIN SHALL BE TROWELLED TO A HARD, SMOOTH SURFACE AND SHALL SLOPE FROM ALL DIRECTIONS TO OUTLET.
4. THE CONSTRUCTION DRAINS SHALL BE INSTALLED IN ALL INLETS BUILT WITH PAVING PROJECTS. (SEE DET. P-1575).
5. CONNECTOR PIPE SHALL BE TRIMMED TO THE FINAL SHAPE AND LENGTH BEFORE CONCRETE IS POURED.
6. PLANS SHOULD SPECIFY GRATE ELEVATION AND INVERT ELEVATION.
7. THE TYPE 'N' CATCH BASIN MAY BE PREFABRICATED PROVIDING A SHOP DRAWING IS APPROVED BY THE ENGINEER PRIOR TO FABRICATION.
8. THE FRAME SHALL BE DET. P-1564, TYPE 1 AND THE GRATE SHALL BE DET P-1565, TYPE 1.
9. STEPS (M.A.G. DET. 428 POLYPROPYLENE) – V=3' (INCL), PLACE ONE STEP 12" ABOVE THE FLOOR OF THE BASIN. V OVER 3', PLACE STEPS AT 12" INTERVALS FROM THE FLOOR OF THE BASIN WITH THE TOP STEP AT 12" (MIN.) BELOW THE TOP OF THE GRATE.

CATCH BASIN WALL THICKNESS

T=6" IF V IS 4' OR LESS
T=8" IF V IS 4' TO 8'
(IF V EXCEEDS 8', SPECIAL DESIGN IS REQUIRED)
V=3'-0" UNLESS OTHERWISE NOTED.

DETAIL NO.					
P-1570	CITY OF PHOENIX STANDARD DETAIL	CATCH BASIN TYPE 'N'	APPROVED CITY ENGINEER 4/28/81 DATE	DETAIL NO. P-1570

Modified

-50-

JOB NAME: GROVERS AVENUE STORM DRAIN LATERAL
JOB NUMBER: 8156.001
BY: ALEX BATT
Date: 01-19-1994
Time: 11:44:58

RCP

Job Statistics:

Number of Pipes	=	11	
Total Length of Pipe	=	4,909 Feet	
Longest Pipe	=	1,346.00 Feet	
Shortest Pipe	=	12.00 Feet	
Maximum Flow	=	513.00 cfs	
Minimum Flow	=	15.00 cfs	
Maximum Velocity	=	11.00 fps	
Minimum Velocity	=	4.78 fps	> 2.5 fps, ∴ ok
Maximum Cover Above Crown	=	19.58 Feet	
Minimum Cover Above Crown	=	8.35 Feet	> 5', ∴ ok
Maximum Ground - HGL	=	7.80 Feet	
Minimum Ground - HGL	=	3.09 Feet	> 3', ∴ ok
Maximum HGL - Crown	=	12.74 Feet	> 0, ∴ ok
Minimum HGL - Crown	=	2.68 Feet	> 0, ∴ ok

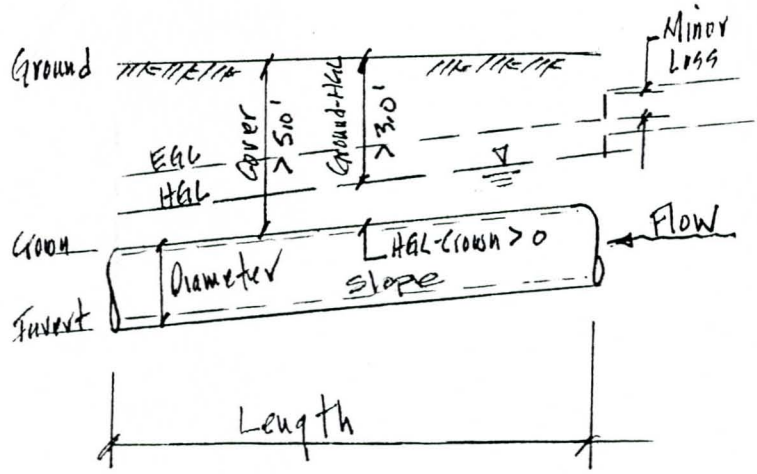

+++++++++1+++++++++2+++++++++3+++++++++4+++++++++5+++++++++6+++++++++7+++++++++8+++++++++9+++++++++10++++++++++11++++++++++12++++++++++13

TABLE 1 - INPUT DATA

Pipe Number	Station	Length (Feet)	Type of Pipe	Diameter (Inches)	Span (Feet)	Rise (Feet)	Number of Pipes	Flow (cfs)	Flow Per Pipe	Ground Elevation	Crown Elevation	Downstream Pipe No.
1	-172	237	RCP	93	0.00	0.00	1	513.00	513.00	1447.40	1427.82	0
	65									1447.40	1429.85	
2	65	12	CBC	96	12.00	8.00	1	503.00	503.00	1447.40	1429.85	1
	77									1447.40	1435.00	
3	77	1,221	RCP	96	0.00	0.00	1	503.00	503.00	1447.40	1435.00	2
	1,298									1451.00	1440.87	
4	1,298	1,346	RCP	84	0.00	0.00	1	350.00	350.00	1451.00	1440.87	3
	2,644									1454.00	1445.65	
5	2,644	657	RCP	48	0.00	0.00	1	103.00	103.00	1454.00	1445.65	4
	3,301									1458.00	1448.89	
6	3,301	550	RCP	42	0.00	0.00	1	84.00	84.00	1458.00	1448.89	5
	3,851									1462.00	1452.16	
7	3,851	486	RCP	42	0.00	0.00	1	84.00	84.00	1462.00	1452.16	6
	4,337									1462.00	1452.82	
8	1,298	100	RCP	60	0.00	0.00	1	139.00	139.00	1451.00	1440.87	3
	1,398									1451.50	1441.70	
9	2,644	100	RCP	84	0.00	0.00	1	245.00	245.00	1454.00	1445.65	4
	2,744									1454.50	1446.65	
10	3,301	100	RCP	24	0.00	0.00	1	15.00	15.00	1458.00	1448.89	5
	3,401									1458.50	1449.89	
11	4,337	100	RCP	42	0.00	0.00	1	81.00	81.00	1462.00	1452.82	7
	4,437									1462.50	1453.82	

+++++++++1+++++++++2+++++++++3+++++++++4+++++++++5+++++++++6+++++++++7+++++++++8+++++++++9+++++++++10++++++++++11++++++++++12++++++++++13

TABLE 2 - HYDRAULIC DESIGN DATA

Pipe Number	Area (Sq Ft)	Perimeter (Feet)	Radius (Feet)	Velocity (fps)	Vel. Head (Feet)	Energy Slope	Pipe Slope	K	Angle	Minor Loss (Feet)	Pipe Loss (Feet)	EGL (Feet)	HGL (Feet)
				0.00								1439.60	1439.60
1	46.64	24.00	1.94	11.00	1.88	0.00323	0.00857	1.0	0	1.88	0.77	1441.48	1439.60
												1442.24	1440.37
2	96.00	40.00	2.40	5.24	0.43	0.00055	0.42917	1.5	0	0.77	0.01	1443.02	1442.59
												1443.02	1442.60
3	50.24	25.00	2.01	10.01	1.56	0.00256	0.00481	0.5	0	0.18	3.13	1443.20	1441.64
												1446.33	1444.77
4	38.47	22.00	1.75	9.10	1.29	0.00255	0.00355	0.3	0	0.00	3.43	1446.34	1445.05
												1449.77	1448.48
5	12.56	13.00	0.97	8.20	1.04	0.00457	0.00493	0.3	0	0.00	3.00	1449.77	1448.73
												1452.77	1451.73
6	9.62	11.00	0.87	8.74	1.18	0.00592	0.00595	0.3	0	0.00	3.26	1452.77	1451.59
												1456.03	1454.84
7	9.62	11.00	0.87	8.74	1.18	0.00592	0.00136	0.3	0	0.00	2.88	1456.03	1454.84
												1458.91	1457.72
8	19.63	16.00	1.23	7.08	0.78	0.00248	0.00830	1.0	90	0.78	0.25	1447.11	1446.33
												1447.36	1446.58
9	38.47	22.00	1.75	6.37	0.63	0.00125	0.01000	1.0	90	0.63	0.12	1450.40	1449.77
												1450.52	1449.89
10	3.14	6.00	0.52	4.78	0.35	0.00351	0.01000	1.0	90	0.35	0.35	1453.13	1452.77
												1453.48	1453.12
11	9.62	11.00	0.87	8.42	1.10	0.00551	0.01000	1.0	90	1.10	0.55	1460.01	1458.91
												1460.56	1459.46

---------1---------2---------3---------4---------5---------6---------7---------8---------9---------10--------11--------12--------13

TABLE 3 - GRAPH DATA SUMMARY

Pipe Number	Station (Feet)	Ground Elevation	EGL Elevation	HGL Elevation	Crown Elevation	Invert Elevation	Cover (Feet)	Ground-HGL (Feet)	HGL-Crown (Feet)
			1439.60	1439.60					
1	-172	1447.40	1441.48	1439.60	1427.82	1420.11	19.58	7.80	11.78
	65	1447.40	1442.24	1440.37	1429.85	1422.14	17.55	7.03	10.52
2	65	1447.40	1443.02	1442.59	1429.85	1421.85	17.55	4.81	12.74
	77	1447.40	1443.02	1442.60	1435.00	1427.00	12.40	4.80	7.60
3	77	1447.40	1443.20	1441.64	1435.00	1427.00	12.40	5.76	6.64
	1298	1451.00	1446.33	1444.77	1440.87	1432.87	10.13	6.23	3.90
4	1298	1451.00	1446.34	1445.05	1440.87	1433.87	10.13	5.95	4.18
	2644	1454.00	1449.77	1448.48	1445.65	1438.65	8.35	5.52	2.83
5	2644	1454.00	1449.77	1448.73	1445.65	1441.65	8.35	5.27	3.08
	3301	1458.00	1452.77	1451.73	1448.89	1444.89	9.11	6.27	2.84
6	3301	1458.00	1452.77	1451.59	1448.89	1445.39	9.11	6.41	2.70
	3851	1462.00	1456.03	1454.84	1452.16	1448.66	9.84	7.16	2.68
7	3851	1462.00	1456.03	1454.84	1452.16	1448.66	9.84	7.16	2.68
	4337	1462.00	1458.91	1457.72	1452.82	1449.32	9.18	4.28	4.90
8	1298	1451.00	1447.11	1446.33	1440.87	1435.87	10.13	4.67	5.46
	1398	1451.50	1447.36	1446.58	1441.70	1436.70	9.80	4.92	4.88
9	2644	1454.00	1450.40	1449.77	1445.65	1438.65	8.35	4.23	4.12
	2744	1454.50	1450.52	1449.89	1446.65	1439.65	7.85	4.61	3.24
10	3301	1458.00	1453.13	1452.77	1448.89	1446.89	9.11	5.23	3.88
	3401	1458.50	1453.48	1453.12	1449.89	1447.89	8.61	5.38	3.23
11	4337	1462.00	1460.01	1458.91	1452.82	1449.32	9.18	3.09	6.09
	4437	1462.50	1460.56	1459.46	1453.82	1450.32	8.68	3.04	5.64

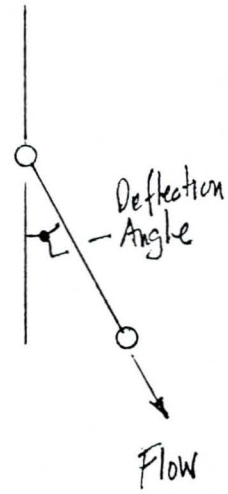

JOB NAME: GROVERS AVENUE STORM DRAIN LATERAL
JOB NUMBER: 8156.001
BY: ALEX BATT
Date: 01-19-1994
Time: 12:00:02

Job Statistics:

Number of Pipes	=	11	
Total Length of Pipe	=	4,909	Feet
Longest Pipe	=	1,346.00	Feet
Shortest Pipe	=	100.00	Feet
Maximum Flow	=	513.00	cfs
Minimum Flow	=	15.00	cfs
Maximum Velocity	=	11.00	fps
Minimum Velocity	=	4.78	fps
Maximum Cover Above Crown	=	19.58	Feet
Minimum Cover Above Crown	=	8.35	Feet
Maximum Ground - HGL	=	7.87	Feet
Minimum Ground - HGL	=	3.80	Feet
Maximum HGL - Crown	=	11.78	Feet
Minimum HGL - Crown	=	1.97	Feet

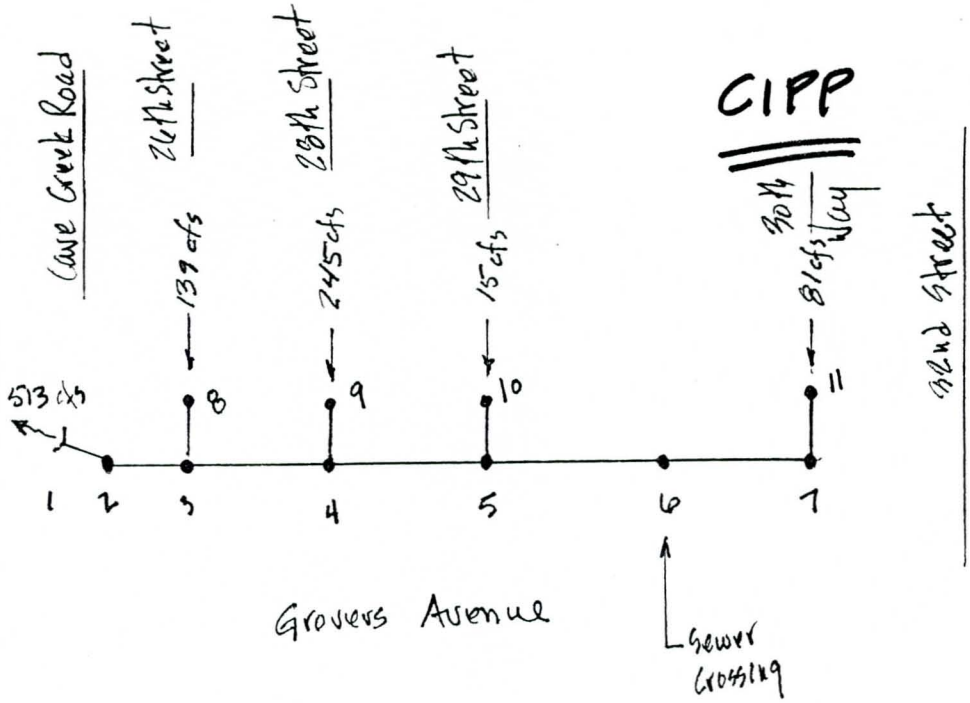

LINE DIAGRAM

---------1---------2---------3---------4---------5---------6---------7---------8---------9---------10---------11---------12---------13

TABLE 1 - INPUT DATA

Pipe Number	Station	Length (Feet)	Type of Pipe	Diameter (Inches)	Span (Feet)	Rise (Feet)	Number of Pipes	Flow (cfs)	Flow Per Pipe	Ground Elevation	Crown Elevation	Downstream Pipe No.
1	-172	237	RCP	93	0.00	0.00	1	513.00	513.00	1447.40	1427.82	0
	65									1447.40	1429.85	
2	65	100	CIPP	96	12.00	8.00	1	503.00	503.00	1447.40	1429.85	1
	165									1447.40	1437.30	
3	165	1,133	CIPP	96	0.00	0.00	1	503.00	503.00	1447.40	1437.30	2
	1,298									1451.00	1440.87	
4	1,298	1,346	CIPP	96	0.00	0.00	1	350.00	350.00	1451.00	1440.87	3
	2,644									1454.00	1445.65	
5	2,644	657	CIPP	54	0.00	0.00	1	103.00	103.00	1454.00	1445.65	4
	3,301									1458.00	1448.89	
6	3,301	550	CIPP	48	0.00	0.00	1	84.00	84.00	1458.00	1448.89	5
	3,851									1462.00	1452.16	
7	3,851	486	CIPP	48	0.00	0.00	1	84.00	84.00	1462.00	1452.16	6
	4,337									1462.00	1452.82	
8	1,298	100	CIPP	60	0.00	0.00	1	139.00	139.00	1451.00	1440.87	3
	1,398									1451.50	1441.70	
9	2,644	100	CIPP	84	0.00	0.00	1	245.00	245.00	1454.00	1445.65	4
	2,744									1454.50	1446.65	
10	3,301	100	CIPP	24	0.00	0.00	1	15.00	15.00	1458.00	1448.89	5
	3,401									1458.50	1449.89	
11	4,337	100	CIPP	42	0.00	0.00	1	81.00	81.00	1462.00	1452.82	7
	4,437									1462.50	1453.82	

---------1---------2---------3---------4---------5---------6---------7---------8---------9---------10---------11---------12---------13

TABLE 2 - HYDRAULIC DESIGN DATA

Pipe Number	Area (Sq Ft)	Perimeter (Feet)	Radius (Feet)	Velocity (fps)	Vel. Head (Feet)	Energy Slope	Pipe Slope	K	Angle	Minor Loss (Feet)	Pipe Loss (Feet)	EGL (Feet)	HGL (Feet)
				0.00								1439.60	1439.60
1	46.64	24.00	1.94	11.00	1.88	0.00323	0.00857	1.0	0	1.88	0.77	1441.48	1439.60
												1442.24	1440.37
2	50.24	25.00	2.01	10.01	1.56	0.00401	0.07450	1.0	0	0.02	0.40	1442.26	1440.70
												1442.66	1441.10
3	50.24	25.00	2.01	10.01	1.56	0.00401	0.00315	0.3	0	0.00	4.54	1442.66	1441.10
												1447.20	1445.64
4	50.24	25.00	2.01	6.97	0.75	0.00194	0.00355	0.3	0	0.04	2.61	1447.24	1446.49
												1449.85	1449.10
5	15.90	14.00	1.14	6.48	0.65	0.00359	0.00493	0.3	0	0.00	2.36	1449.85	1449.20
												1452.21	1451.56
6	12.56	13.00	0.97	6.69	0.69	0.00475	0.00595	0.3	0	0.00	2.61	1452.21	1451.52
												1454.82	1454.13
7	12.56	13.00	0.97	6.69	0.69	0.00475	0.00136	0.3	0	0.00	2.31	1454.82	1454.13
												1457.13	1456.44
8	19.63	16.00	1.23	7.08	0.78	0.00387	0.00830	1.0	90	0.78	0.39	1447.98	1447.20
												1448.37	1447.59
9	38.47	22.00	1.75	6.37	0.63	0.00195	0.01000	1.0	90	0.63	0.20	1450.48	1449.85
												1450.68	1450.05
10	3.14	6.00	0.52	4.78	0.35	0.00548	0.01000	1.0	90	0.35	0.55	1452.57	1452.21
												1453.12	1452.76
11	9.62	11.00	0.87	8.42	1.10	0.00860	0.01000	1.0	90	1.10	0.86	1458.23	1457.13
												1459.09	1457.99

+++++++++1+++++++++2+++++++++3+++++++++4+++++++++5+++++++++6+++++++++7+++++++++8+++++++++9+++++++++10++++++++++11++++++++++12++++++++++13

TABLE 3 - GRAPH DATA SUMMARY

Pipe Number	Station (Feet)	Ground Elevation	EGL Elevation	HGL Elevation	Crown Elevation	Invert Elevation	Cover (Feet)	Ground-HGL (Feet)	HGL-Crown (Feet)
			1439.60	1439.60					
1	-172	1447.40	1441.48	1439.60	1427.82	1420.11	19.58	7.80	11.78
	65	1447.40	1442.24	1440.37	1429.85	1422.14	17.55	7.03	10.52
2	65	1447.40	1442.26	1440.70	1429.85	1421.85	17.55	6.70	10.85
	165	1447.40	1442.66	1441.10	1437.30	1429.30	10.10	6.30	3.80
3	165	1447.40	1442.66	1441.10	1437.30	1429.30	10.10	6.30	3.80
	1298	1451.00	1447.20	1445.64	1440.87	1432.87	10.13	5.36	4.77
4	1298	1451.00	1447.24	1446.49	1440.87	1432.87	10.13	4.51	5.62
	2644	1454.00	1449.85	1449.10	1445.65	1437.65	8.35	4.90	3.45
5	2644	1454.00	1449.85	1449.20	1445.65	1441.15	8.35	4.80	3.55
	3301	1458.00	1452.21	1451.56	1448.89	1444.39	9.11	6.44	2.67
6	3301	1458.00	1452.21	1451.52	1448.89	1444.89	9.11	6.48	2.63
	3851	1462.00	1454.82	1454.13	1452.16	1448.16	9.84	7.87	1.97
7	3851	1462.00	1454.82	1454.13	1452.16	1448.16	9.84	7.87	1.97
	4337	1462.00	1457.13	1456.44	1452.82	1448.82	9.18	5.56	3.62
8	1298	1451.00	1447.98	1447.20	1440.87	1435.87	10.13	3.80	6.33
	1398	1451.50	1448.37	1447.59	1441.70	1436.70	9.80	3.91	5.89
9	2644	1454.00	1450.48	1449.85	1445.65	1438.65	8.35	4.15	4.20
	2744	1454.50	1450.68	1450.05	1446.65	1439.65	7.85	4.45	3.40
10	3301	1458.00	1452.57	1452.21	1448.89	1446.89	9.11	5.79	3.32
	3401	1458.50	1453.12	1452.76	1449.89	1447.89	8.61	5.74	2.87
11	4337	1462.00	1458.23	1457.13	1452.82	1449.32	9.18	4.87	4.31
	4437	1462.50	1459.09	1457.99	1453.82	1450.32	8.68	4.51	4.17

JOB NAME: GROVERS AVENUE STORM DRAIN LATERAL
JOB NUMBER: 8156.001
BY: ALEX BATT
Date: 01-19-1994
Time: 12:03:14

CBC

Job Statistics:

Number of Pipes	=	11
Total Length of Pipe	=	4,909 Feet
Longest Pipe	=	1,346.00 Feet
Shortest Pipe	=	12.00 Feet
Maximum Flow	=	513.00 cfs
Minimum Flow	=	15.00 cfs
Maximum Velocity	=	11.46 fps
Minimum Velocity	=	4.78 fps
Maximum Cover Above Crown	=	19.58 Feet
Minimum Cover Above Crown	=	8.35 Feet
Maximum Ground - HGL	=	8.41 Feet
Minimum Ground - HGL	=	4.29 Feet
Maximum HGL - Crown	=	11.78 Feet
Minimum HGL - Crown	=	1.43 Feet

---------1---------2---------3---------4---------5---------6---------7---------8---------9---------10--------11--------12--------13

TABLE 1 - INPUT DATA

Pipe Number	Station	Length (Feet)	Type of Pipe	Diameter (Inches)	Span (Feet)	Rise (Feet)	Number of Pipes	Flow (cfs)	Flow Per Pipe	Ground Elevation	Crown Elevation	Downstream Pipe No.
1	-172	237	RCP	93	0.00	0.00	1	513.00	513.00	1447.40	1427.82	0
	65									1447.40	1429.85	
2	65	12	CBC	~~96~~	8.00	8.00	1	503.00	503.00	1447.40	1429.85	1
	77									1447.40	1435.00	
3	77	1,221	CBC	~~96~~	7.00	7.00	1	503.00	503.00	1447.40	1435.00	2
	1,298									1451.00	1440.87	
4	1,298	1,346	CBC	~~84~~	7.00	6.00	1	350.00	350.00	1451.00	1440.87	3
	2,644									1454.00	1445.65	
5	2,644	657	CBC	~~48~~	4.00	4.00	1	103.00	103.00	1454.00	1445.65	4
	3,301									1458.00	1448.89	
6	3,301	550	RCP	~~42~~	~~4.00~~	~~4.00~~	1	84.00	84.00	1458.00	1448.89	5
	3,851									1462.00	1452.16	
7	3,851	486	RCP	~~42~~	~~4.00~~	~~4.00~~	1	84.00	84.00	1462.00	1452.16	6
	4,337									1462.00	1452.82	
8	1,298	100	CBC	~~50~~	4.00	4.00	1	139.00	139.00	1451.00	1440.87	3
	1,398									1451.50	1441.70	
9	2,644	100	CBC	~~84~~	6.00	6.00	1	245.00	245.00	1454.00	1445.65	4
	2,744									1454.50	1446.65	
10	3,301	100	RCP	24	0.00	0.00	1	15.00	15.00	1458.00	1448.89	5
	3,401									1458.50	1449.89	
11	4,337	100	RCP	36	0.00	0.00	1	81.00	81.00	1462.00	1452.82	7
	4,437									1462.50	1453.82	

---------1---------2---------3---------4---------5---------6---------7---------8---------9---------10--------11--------12--------13

TABLE 2 - HYDRAULIC DESIGN DATA

Pipe Number	Area (Sq Ft)	Perimeter (Feet)	Radius (Feet)	Velocity (fps)	Vel. Head (Feet)	Energy Slope	Pipe Slope	K	Angle	Minor Loss (Feet)	Pipe Loss (Feet)	EGL (Feet)	HGL (Feet)
				0.00								1439.60	1439.60
1	46.64	24.00	1.94	11.00	1.88	0.00323	0.00857	1.0	0	1.88	0.77	1441.48	1439.60
												1442.24	1440.37
2	64.00	32.00	2.00	7.86	0.96	0.00159	0.42917	1.5	0	0.23	0.02	1442.47	1441.52
												1442.49	1441.53
3	49.00	28.00	1.75	10.27	1.64	0.00324	0.00481	0.5	0	0.04	3.96	1442.54	1440.90
												1446.50	1444.86
4	42.00	26.00	1.62	8.33	1.08	0.00238	0.00355	0.3	0	0.02	3.20	1446.51	1445.43
												1449.71	1448.63
5	16.00	16.00	1.00	6.44	0.64	0.00269	0.00493	0.3	0	0.02	1.77	1449.73	1449.08
												1451.49	1450.85
6	9.62	11.00	0.87	8.74	1.18	0.00592	0.00595	0.3	0	0.02	3.26	1451.52	1450.33
												1454.78	1453.59
7	9.62	11.00	0.87	8.74	1.18	0.00592	0.00136	0.3	0	0.00	2.88	1454.78	1453.59
												1457.65	1456.47
8	16.00	16.00	1.00	8.69	1.17	0.00490	0.00830	1.0	90	1.17	0.49	1447.67	1446.50
												1448.16	1446.99
9	36.00	24.00	1.50	6.81	0.72	0.00175	0.01000	1.0	90	0.72	0.17	1450.43	1449.71
												1450.61	1449.89
10	3.14	6.00	0.52	4.78	0.35	0.00351	0.01000	1.0	90	0.35	0.35	1451.85	1451.49
												1452.20	1451.85
11	7.07	9.00	0.79	11.46	2.04	0.01177	0.01000	1.0	90	2.04	1.18	1459.69	1457.65
												1460.87	1458.83

+++++++++1+++++++++2+++++++++3+++++++++4+++++++++5+++++++++6+++++++++7+++++++++8+++++++++9+++++++++10++++++++++11++++++++++12++++++++++13

TABLE 3 - GRAPH DATA SUMMARY

Pipe Number	Station (Feet)	Ground Elevation	EGL Elevation	HGL Elevation	Crown Elevation	Invert Elevation	Cover (Feet)	Ground-HGL (Feet)	HGL-Crown (Feet)
			1439.60	1439.60					
1	-172	1447.40	1441.48	1439.60	1427.82	1420.11	19.58	7.80	11.78
	65	1447.40	1442.24	1440.37	1429.85	1422.14	17.55	7.03	10.52
2	65	1447.40	1442.47	1441.52	1429.85	1421.85	17.55	5.88	11.67
	77	1447.40	1442.49	1441.53	1435.00	1427.00	12.40	5.87	6.53
3	77	1447.40	1442.54	1440.90	1435.00	1428.00	12.40	6.50	5.90
	1298	1451.00	1446.50	1444.86	1440.87	1433.87	10.13	6.14	3.99
4	1298	1451.00	1446.51	1445.43	1440.87	1434.87	10.13	5.57	4.56
	2644	1454.00	1449.71	1448.63	1445.65	1439.65	8.35	5.37	2.98
5	2644	1454.00	1449.73	1449.08	1445.65	1441.65	8.35	4.92	3.43
	3301	1458.00	1451.49	1450.85	1448.89	1444.89	9.11	7.15	1.96
6	3301	1458.00	1451.52	1450.33	1448.89	1445.39	9.11	7.67	1.44
	3851	1462.00	1454.78	1453.59	1452.16	1448.66	9.84	8.41	1.43
7	3851	1462.00	1454.78	1453.59	1452.16	1448.66	9.84	8.41	1.43
	4337	1462.00	1457.65	1456.47	1452.82	1449.32	9.18	5.53	3.65
8	1298	1451.00	1447.67	1446.50	1440.87	1436.87	10.13	4.50	5.63
	1398	1451.50	1448.16	1446.99	1441.70	1437.70	9.80	4.51	5.29
9	2644	1454.00	1450.43	1449.71	1445.65	1439.65	8.35	4.29	4.06
	2744	1454.50	1450.61	1449.89	1446.65	1440.65	7.85	4.61	3.24
10	3301	1458.00	1451.85	1451.49	1448.89	1446.89	9.11	6.51	2.60
	3401	1458.50	1452.20	1451.85	1449.89	1447.89	8.61	6.65	1.96
11	4337	1462.00	1459.69	1457.65	1452.82	1449.82	9.18	4.35	4.83
	4437	1462.50	1460.87	1458.83	1453.82	1450.82	8.68	3.67	5.01

```
DEFINT A-Z
SUB Compute
```

Computer Code

Check Computer Calculations

```
FOR i = 1 TO numpipes

'Set j = the downstream pipe number
        j = dpn(i)

'Compute the downstream ground elevation of the pipe
        ged(i) = geu(j)

'Compute the downstream crown elevation of the pipe
        ced(i) = ceu(j)

'Compute the downstream station of the pipe
        stad(i) = stau(j)

'compute the upstream station of the pipe
        stau(i) = stad(i) + l(i)

'compute the invert elevation for the downstream end of the pipe
        IF type$(i) = "CBC" THEN ied(i) = ced(i) - rise(i) ELSE ied(i) = ced(i)

'compute the invert elevation for the upstream end of the pipe
        IF type$(i) = "CBC" THEN ieu(i) = ceu(i) - rise(i) ELSE ieu(i) = ceu(i)

'Compute the pipe slope
        so(i) = (ieu(i) - ied(i)) / l(i)

'Compute pipe hydraulic data using Manning's Equation
        IF type$(i) = "CBC" THEN
                area(i) = span(i) * rise(i)                'rectangular pipe
                perimeter(i) = 2 * (span(i) + rise(i))
                hydradius(i) = area(i) / perimeter(i)

        ELSE
                area(i) = 3.14 * d(i) ^ 2 / 4 / 144            'circular pipe
                perimeter(i) = 3.14 * d(i) / 12
                hydradius(i) = area(i) / perimeter(i)


        END IF


'Compute the unit flow per pipe
        qu(i) = q(i) / m(i)

'Compute the velocity and the velocity head in the pipe
        v(i) = qu(i) / area(i)
        hv(i) = v(i) ^ 2 / 2 / 32.2

'Compute the energy slope
        se(i) = (v(i) * n(i) / 1.49 / (hydradius(i) ^ (2 / 3))) ^ 2

'Compute the friction loss in the pipe
        h(i) = l(i) * se(i)

'Compute the minor loss at the downstream end of the pipe
        deltav = v(i) - v(j) * COS(angle(i) / 57.2958)

        REM 'If deltav > 0 then use expansion loss coefficient
        REM         IF deltav > 0 THEN k(i) = 1 ELSE k(i) = .5

        REM 'If deltav <= 0 then use contraction loss coefficient
```

```
        ml(i) = deltav ^ 2 / 2 / 32.2 * k(i)    '

'Compute the energy grade elevation at the downstream end of the pipe
        egd(i) = egu(j) + ml(i)

'Compute the energy grade elevation at the upstream end of the pipe
        egu(i) = egd(i) + h(i)

'Compute the hydraulic grade elevation at the downstream end of the pipe
        hgd(i) = egd(i) - hv(i)

'Compute the hydraulic grade elevation at the upstream end of the pipe
        hgu(i) = egu(i) - hv(i)

'Compute the ground cover above the pipe crown at the downstream end
        coverd(i) = ged(i) - ced(i)

'Compute the ground cover above the pipe crown at the uptream end
        coveru(i) = geu(i) - ceu(i)

'Compute the depth below ground of the HGL at the downstream end
        DepthHgd(i) = ged(i) - hgd(i)

'Compute the depth below ground of the HGL at the upstream end
        DepthHgu(i) = geu(i) - hgu(i)

'Compute the depth of the HGL above the pipe Crown downstream end
        HglCrownd(i) = hgd(i) - ced(i)

'Compute the depth of the HGL above the pipe Crown upstream end
        HglCrownu(i) = hgu(i) - ceu(i)


NEXT i

'Compute job statistics
        tlp = total(l())                    'total pipe length
        lp = max(l())                      'longest pipe
        sp = min(l())                      'shortest pipe
        MaxCover = max(coverd())           'maximum cover
        MinCover = min(coverd())          'minimum cover
        MaxFlow = max(q())                 'maximum flow
        MinFlow = min(q())                 'minimum flow
        MaxVel = max(v())                  'maximum velocity
        MinVel = min(v())                  'minimum velocity
        MaxDepthHgd = max(DepthHgd())          'maximum ground - HGL
        MinDepthHgd = min(DepthHgd())          'minimum ground - HGL
        MaxHglCrown = max(HglCrownd())          'maximum HGL - crown elevation
        MinHglCrown = min(HglCrownd())         'minimum HGL - crown elevation

'PrintOutput

END SUB
```

JOB NAME: GROVERS AVENUE STORM DRAIN LATERAL
JOB NUMBER: 8156.001
BY: ALEX BATT
Date: 01-19-1994
Time: 11:44:58

Computer Code Check for RCP

Job Statistics:

Number of Pipes	=	11
Total Length of Pipe	=	4,909 Feet
Longest Pipe	=	1,346.00 Feet
Shortest Pipe	=	12.00 Feet
Maximum Flow	=	513.00 cfs
Minimum Flow	=	15.00 cfs
Maximum Velocity	=	11.00 fps
Minimum Velocity	=	4.78 fps
Maximum Cover Above Crown	=	19.58 Feet
Minimum Cover Above Crown	=	8.35 Feet
Maximum Ground - HGL	=	7.80 Feet
Minimum Ground - HGL	=	3.09 Feet
Maximum HGL - Crown	=	12.74 Feet
Minimum HGL - Crown	=	2.68 Feet

---------1---------2---------3---------4---------5---------6---------7---------8---------9---------10--------11--------12--------13

TABLE 1 - INPUT DATA

Pipe Number	Station	Length (Feet)	Type of Pipe	Diameter (Inches)	Span (Feet)	Rise (Feet)	Number of Pipes	Flow (cfs)	Flow Per Pipe	Ground Elevation	Crown Elevation	Downstream Pipe No.
1	-172	237	RCP	93	0.00	0.00	1	513.00	513.00	1447.40	1427.82	0
	65									1447.40	1429.85	
2	65	12	CBC	96	12.00	8.00	1	503.00	503.00	1447.40	1429.85	1
	77									1447.40	1435.00	
3	77	1,221	RCP	96	0.00	0.00	1	503.00	503.00	1447.40	1435.00	2
	1,298									1451.00	1440.87	
4	1,298	1,346	RCP	84	0.00	0.00	1	350.00	350.00	1451.00	1440.87	3
	2,644									1454.00	1445.65	
5	2,644	657	RCP	48	0.00	0.00	1	103.00	103.00	1454.00	1445.65	4
	3,301									1458.00	1448.89	
6	3,301	550	RCP	42	0.00	0.00	1	84.00	84.00	1458.00	1448.89	5
	3,851									1462.00	1452.16	
7	3,851	486	RCP	42	0.00	0.00	1	84.00	84.00	1462.00	1452.16	6
	4,337									1462.00	1452.82	
8	1,298	100	RCP	60	0.00	0.00	1	139.00	139.00	1451.00	1440.87	3
	1,398									1451.50	1441.70	
9	2,644	100	RCP	84	0.00	0.00	1	245.00	245.00	1454.00	1445.65	4
	2,744									1454.50	1446.65	
10	3,301	100	RCP	24	0.00	0.00	1	15.00	15.00	1458.00	1448.89	5
	3,401									1458.50	1449.89	
11	4,337	100	RCP	42	0.00	0.00	1	81.00	81.00	1462.00	1452.82	7
	4,437									1462.50	1453.82	

---------1---------2---------3---------4---------5---------6---------7---------8---------9---------10--------11--------12--------13

TABLE 2 - HYDRAULIC DESIGN DATA

HAND CHECK COMPUTER CALCS.

Pipe Number	Area (Sq Ft)	Perimeter (Feet)	Radius (Feet)	Velocity (fps)	Vel. Head (Feet)	Energy Slope	Pipe Slope	K	Angle	Minor Loss (Feet)	Pipe Loss (Feet)	EGL (Feet)	HGL (Feet)
				0.00								1439.60	1439.60
1	46.64	24.00	1.94	11.00	1.88	0.00323	0.00857	1.0	0	1.88	0.77	1441.48	1439.60
												1442.24	1440.37
2	96.00	40.00	2.40	5.24	0.43	0.00055	0.42917	1.5	0	0.77	0.01	1443.02	1442.59
		$\frac{\pi d^2}{4} = 3.1416(8)^2/4 = 50.27$ SF.							GIVEN VALUE			1443.02	1442.60
3	50.24	25.00	2.01	10.01	1.56	0.00256	0.00481	0.5	0	0.18	3.13	1443.20	1441.64
		$\pi d = 3.1416(7) = 21.99'$							GIVEN VALUE			1446.33	1444.77
4	38.47	22.00	1.75	9.10	1.29	0.00255	0.00355	0.3	0	0.00	3.43	1446.34	1445.05
			$A/P = 12.56/13 = 0.97'$									1449.77	1448.48
5	12.56	13.00	0.97	8.20	1.04	0.00457	0.00493	0.3	0	0.00	3.00	1449.77	1448.73
				$Q/A = 84/9.62 = 8.73$ FPS								1452.77	1451.73
6	9.62	11.00	0.87	8.74	1.18	0.00592	0.00595	0.3	0	0.00	3.26	1452.77	1451.59
					$V^2/2g = 8.74^2/64.4 = 1.19'$							1456.03	1454.84
7	9.62	11.00	0.87	8.74	1.18	0.00592	0.00136	0.3	0	0.00	2.88	1456.03	1454.84
		$S_e = [(V \cdot n)/(1.486\, r^{2/3})]^2 = .0025$					$[(7.08(.012))/(1.486(1.23)^{2/3})]^2$					1458.91	1457.72
8	19.63	16.00	1.23	7.08	0.78	0.00248	0.00830	1.0	90	0.78	0.25	1447.11	1446.33
		$S_o = (INV._{N+1} - INV._N)/L = \frac{1439.65 - 1438.65}{100} = .01'/'$										1447.36	1446.58
9	38.47	22.00	1.75	6.37	0.63	0.00125	0.01000	1.0	90	0.63	0.12	1450.40	1449.77
		$M_L = (\Delta V^2/2g)K = [(4.78 - 8.20(\cos 90))^2/64.4]\,1.0 = 0.35'$										1450.52	1449.89
10	3.14	6.00	0.52	4.78	0.35	0.00351	0.01000	1.0	90	0.35	0.35	1453.13	1452.77
		$h_f = S_e \cdot L = 0.00551 \times 100 = 0.55'$										1453.48	1453.12
11	9.62	11.00	0.87	8.42	1.10	0.00551	0.01000	1.0	90	1.10	0.55	1460.01	1458.91
												1460.56	1459.46

+++++++++1++++++++++2++++++++++3++++++++++4++++++++++5++++++++++6++++++++++7++++++++++8++++++++++9++++++++++10++++++++++11++++++++++12++++++++++13

TABLE 3 - GRAPH DATA SUMMARY

Pipe Number	Station (Feet)	Ground Elevation	EGL Elevation	HGL Elevation	Crown Elevation	Invert Elevation	Cover (Feet)	Ground-HGL (Feet)	HGL-Crown (Feet)
			1439.60	1439.60					
1	-172	1447.40	1441.48	1439.60	1427.82	1420.11	19.58	7.80	11.78
	65	1447.40	1442.24	1440.37	1429.85	1422.14	17.55	7.03	10.52
2	65	1447.40	1443.02	1442.59	1429.85	1421.85	17.55	4.81	12.74
	77	1447.40	1443.02	1442.60	1435.00	1427.00	12.40	4.80	7.60
3	77	1447.40	1443.20	1441.64	1435.00	1427.00	12.40	5.76	6.64
	1298	1451.00	1446.33	1444.77	1440.87	1432.87	10.13	6.23	3.90
4	1298	1451.00	1446.34	1445.05	1440.87	1433.87	10.13	5.95	4.18
	2644	1454.00	1449.77	1448.48	1445.65	1438.65	8.35	5.52	2.83
5	2644	1454.00	1449.77	1448.73	1445.65	1441.65	8.35	5.27	3.08
	3301	1458.00	1452.77	1451.73	1448.89	1444.89	9.11	6.27	2.84
6	3301	1458.00	1452.77	1451.59	1448.89	1445.39	9.11	6.41	2.70
	3851	1462.00	1456.03	1454.84	1452.16	1448.66	9.84	7.16	2.68
7	3851	1462.00	1456.03	1454.84	1452.16	1448.66	9.84	7.16	2.68
	4337	1462.00	1458.91	1457.72	1452.82	1449.32	9.18	4.28	4.90
8	1298	1451.00	1447.11	1446.33	1440.87	1435.87	10.13	4.67	5.46
	1398	1451.50	1447.36	1446.58	1441.70	1436.70	9.80	4.92	4.88
9	2644	1454.00	1450.40	1449.77	1445.65	1438.65	8.35	4.23	4.12
	2744	1454.50	1450.52	1449.89	1446.65	1439.65	7.85	4.61	3.24
10	3301	1458.00	1453.13	1452.77	1448.89	1446.89	9.11	5.23	3.88
	3401	1458.50	1453.48	1453.12	1449.89	1447.89	8.61	5.38	3.23
11	4337	1462.00	1460.01	1458.91	1452.82	1449.32	9.18	3.09	6.09
	4437	1462.50	1460.56	1459.46	1453.82	1450.32	8.68	3.04	5.64

OK BF

TABLE OF CONTENTS

LIST OF APPENDIX ii
LIST OF TABLES ii
LIST OF FIGURES ii

A. INTRODUCTION 1
B. PREVIOUS STUDIES 2
C. SITE CONDITIONS 4
1. Drainage Area 4
2. Topography 5
3. Soils 5
4. Utility Conflicts 4
5. Right-of-way and Easements 7
6. Private and Public Access 7

D. HYDROLOGY 8
1. Drainage Map 8
2. Storm Frequency and Distribution 9
3. Lag Time 9
4. Runoff 9

E. LATERAL DESIGN 10
1. Design Criteria 10
2. Constraints 11
3. Alignment 12
4. Configuration 12
5. Junction Structure 12
6. Inlet Locations 14
7. Maintenance 16
8. Value Engineering 16

F. DESIGN REVIEWS AND PERMITS 17
1. City of Phoenix 17
2. Utility Companies 17
3. Maricopa County Department of Environmental Management 18
4. Storm Water Pollution Prevention Plan/NOI 18
5. Schools 18

G. CONSTRUCTION
1. Phasing 20
2. Duration and Schedule 20
3. Hazardous Materials 21
4. Cost 21

H. CONCLUSION 21

REFERENCES 22

LIST OF TABLES

TABLE 1 Inlet Design Summary 10

TABLE 2 Design Criteria 11

TABLE 1 Peak Design Flows 14

LIST OF FIGURES

FIGURE 1 Typical Section 13

FIGURE 2 Junction Structure Details 15

FIGURE 3 Inlet Details 6

LIST OF APPENDIXES

APPENDIX A - CALCULATIONS

APPENDIX B - DRAINAGE MAP

APPENDIX C - HYDRAULIC PROFILE MAP

APPENDIX D- RIGHT-OF-WAY MAP

Registered Professional Engineer (Civil)
CERTIFICATE NO.
13483
BRUCE J.
FRIEDHOFF
1/24/94
Date Signed
ARIZONA, U.S.A.

Preliminary Construction Cost Estimate (RCP)

No.	Description	Unit	Quantity	Unit Cost	Cost
1	24 Inch Reinforced Concrete Pipe	feet	73	$48	$3,500
2	42 Inch Reinforced Concrete Pipe	feet	1,138	$84	$95,590
3	48 Inch Reinforced Concrete Pipe	feet	657	$96	$63,070
4	60 Inch Reinforced Concrete Pipe	feet	110	$150	$16,500
5	84 Inch Reinforced Concrete Pipe	feet	1,492	$210	$313,320
6	96 Inch Reinforced Concrete Pipe	feet	1,221	$240	$293,040
7	24 Inch Reinforced Concrete Connector Pipe	feet	80	$60	$4,800
8	36 Inch Reinforced Concrete Connector Pipe	feet	200	$83	$16,600
9	96x84 Manhole Base Transition (P-1560)	ea	1	$4,000	$4,000
10	84x48 Manhole Base Transition (P-1560)	ea	1	$3,500	$3,500
11	60x36 Inch Pre-Fab Wye	ea	3	$1,500	$4,500
12	84x36 Inch Pre-Fab Wye	ea	3	$2,000	$6,000
13	96x96x60 Inch Pre-Fab Tee	ea	1	$3,500	$3,500
14	48 Inch Man Hole Shaft (MAG 420)	ea	5	$1,500	$7,500
15	48 Inch Man Hole Base (P-1520)	ea	5	$2,500	$12,500
16	60 Inch Man Hole Base (MAG-521)	ea	6	$3,500	$21,000
17	60 Inch Man Hole Shaft (MAG-420)	ea	8	$2,000	$16,000
18	10x10x10 Foot Junction Structure	ea	1	$12,000	$12,000
19	12x12x16 Foot Junction Structure	ea	1	$20,000	$20,000
20	Catch Basin Type M-1, L = 13 (P-1569 Mod.)	ea	2	$2,000	$4,000
21	Catch Basin Type M-1, L = 17 (P-1569)	ea	1	$2,500	$2,500
22	Catch Basin Type M-2, L = 12 (P-1569 Mod.)	ea	2	$3,500	$7,000
23	Catch Basin Type M-2, L = 15 (P-1569 Mod.)	ea	10	$4,500	$45,000
24	Catch Basin Type N , L = 28 (P-1570 Mod.)	ea	1	$7,000	$7,000
25	Catch Basin Type N , L = 36 (P-1570 Mod.)	ea	2	$9,000	$18,000
26	Catch Basin & Apron, Type N , Single (P-1570)	ea	1	$1,800	$1,800
27	Pipe Collar (MAG-505)	ea	32	$350	$11,200
28	Large Diameter Plugs (MAG-427)	ea	2	$1,000	$2,000
29	Curb and Gutter, Type 'A', H=6" (MAG-220)	feet	942	$5.50	$5,180
30	Concrete Sidewalk (P-1230)	sq ft	4,710	$2.50	$11,780
31	Pavement Replacement, C-3/4 x 2" Thick	sq yd	2,117	$24.00	$50,810
32	Permanent Pipe Support (MAG-403-1&2)	ea	5	$660	$3,300
33	Adjust Valve Box & Cover (MAG-270)	ea	12	$250	$3,000
34	Adjust Man Hole Frame & Cover (MAG-270)	ea	8	$250	$2,000
35	Survey Marker, Type 'B' (MAG-120-1)	ea	8	$150	$1,200
36	8 Inch Vitrified Clay Pipe Sewer Relocation	feet	200	$18	$3,600
37	Channel Excavation	cu yd	1,200	$3.00	$3,600
38	Traffic and Access Control	job	1	$30,000	$30,000
39	Survey	Job	1	$30,000	$30,000
40	Uniformed Off-Duty Law Enforcement	hour	100	$21	$2,100
41	Allowance for EXTRA Work	Job	1	$50,000	$50,000
42	Allowance for Quality Control & Testing	Job	1	$50,000	$50,000
43	Allowance for Public Information and Notification	Job	1	$20,000	$20,000
44	Mobilization	job	1	$10,000	$10,000
	Subtotal				$1,291,990
	Contingencies	job	20%		$258,400
	Engineer's Opinion of Construction Cost				$1,550,390

Morrison-Maierle/CSSA, Inc. 19-Jan-90

Preliminary Construction Cost Estimate (CIPP)

No.	Description	Unit	Quantity	Unit Cost	Cost
1	24 Inch Cast In Place Concrete Pipe	feet	73	$38	$2,770
2	42 Inch Cast In Place Concrete Pipe	feet	102	$90	$9,180
3	48 Inch Cast In Place Concrete Pipe	feet	1,136	$96	$109,060
4	54 Inch Cast In Place Concrete Pipe	feet	657	$120	$78,840
5	60 Inch Cast In Place Concrete Pipe	feet	110	$150	$16,500
6	84 Inch Cast In Place Concrete Pipe	feet	146	$280	$40,880
7	96 Inch Cast In Place Concrete Pipe	feet	2,579	$300	$773,700
8	24 Inch Reinforced Concrete Connector Pipe	feet	80	$60	$4,800
9	36 Inch Reinforced Concrete Connector Pipe	feet	200	$83	$16,600
10	CIPP Man Hole	ea	11	$3,600	$39,600
11	48 Inch Man Hole Shaft (MAG 420)	ea	5	$1,500	$7,500
12	48 Inch Man Hole Base (P-1520)	ea	5	$2,500	$12,500
13	60 Inch Man Hole Base (MAG-521)	ea	6	$3,500	$21,000
14	60 Inch Man Hole Shaft (MAG-420)	ea	8	$2,000	$16,000
15	10x10x10 Foot Junction Structure	ea	1	$12,000	$12,000
16	12x12x16 Foot Junction Structure	ea	1	$20,000	$20,000
17	Catch Basin Type M-1, L = 13 (P-1569 Mod.)	ea	2	$2,000	$4,000
18	Catch Basin Type M-1, L = 17 (P-1569)	ea	1	$2,500	$2,500
19	Catch Basin Type M-2, L = 12 (P-1569 Mod.)	ea	2	$3,500	$7,000
20	Catch Basin Type M-2, L = 15 (P-1569 Mod.)	ea	10	$4,500	$45,000
21	Catch Basin Type N , L = 28 (P-1570 Mod.)	ea	1	$7,000	$7,000
22	Catch Basin Type N , L = 36 (P-1570 Mod.)	ea	2	$9,000	$18,000
23	Catch Basin & Apron, Type N , Single (P-1570)	ea	1	$1,800	$1,800
24	Pipe Collar (MAG-505)	ea	32	$350	$11,200
25	Large Diameter Plugs (MAG-427)	ea	2	$1,000	$2,000
26	Curb and Gutter, Type 'A', H=6" (MAG-220)	feet	942	$5.50	$5,180
27	Concrete Sidewalk (P-1230)	sq ft	4,710	$2.50	$11,780
28	Pavement Replacement, C-3/4 x 2" Thick	sq yd	2,117	$24.00	$50,810
29	Permanent Pipe Support (MAG-403-1&2)	ea	5	$660	$3,300
30	Adjust Valve Box & Cover (MAG-270)	ea	12	$250	$3,000
31	Adjust Man Hole Frame & Cover (MAG-270)	ea	8	$250	$2,000
32	Survey Marker, Type 'B' (MAG-120-1)	ea	8	$150	$1,200
33	8 Inch Vitrified Clay Pipe Sewer Relocation	feet	200	$18	$3,600
34	Channel Excavation	cu yd	1,200	$3.00	$3,600
35	Traffic and Access Control	job	1	$30,000	$30,000
36	Survey	Job	1	$30,000	$30,000
37	Uniformed Off-Duty Law Enforcement	hour	100	$21	$2,100
38	Allowance for EXTRA Work	Job	1	$50,000	$50,000
39	Allowance for Quality Control & Testing	Job	1	$50,000	$50,000
40	Allowance for Public Information and Notification	Job	1	$20,000	$20,000
41	Mobilization	job	1	$10,000	$10,000
	Subtotal				$1,556,000
	Contingencies	job	20%		$311,200
	Engineer's Opinion of Construction Cost				$1,867,200

Morrison-Maierle/CSSA, Inc. 19-Jan-90

Preliminary Construction Cost Estimate (CBC)

No.	Description	Unit	Quantity	Unit Cost	Cost
1	24 Inch Reinforced Concrete Pipe	feet	73	$48	$3,500
2	36 Inch Reinforced Concrete Pipe	feet	102	$84	$8,570
3	4x4 Foot Concrete Box Conduit	feet	767	$222	$170,440
4	6x6 Foot Concrete Box Conduit	feet	146	$311	$45,420
5	7x6 Foot Concrete Box Conduit	feet	1,346	$333	$448,670
6	7x7 Foot Concrete Box Conduit	feet	1,221	$356	$434,130
7	24 Inch Reinforced Concrete Connector Pipe	feet	80	$60	$4,800
8	36 Inch Reinforced Concrete Connector Pipe	feet	200	$83	$16,600
9	48 Inch Man Hole Shaft (MAG 420)	ea	5	$1,500	$7,500
10	48 Inch Man Hole Base (P-1520)	ea	5	$2,500	$12,500
11	12x12x16 Foot Junction Structure	ea	1	$20,000	$20,000
12	Catch Basin Type M-1, L = 13 (P-1569 Mod.)	ea	2	$2,000	$4,000
13	Catch Basin Type M-1, L = 17 (P-1569)	ea	1	$2,500	$2,500
14	Catch Basin Type M-2, L = 12 (P-1569 Mod.)	ea	2	$3,500	$7,000
15	Catch Basin Type M-2, L = 15 (P-1569 Mod.)	ea	10	$4,500	$45,000
16	Catch Basin Type N , L = 28 (P-1570 Mod.)	ea	1	$7,000	$7,000
17	Catch Basin Type N , L = 36 (P-1570 Mod.)	ea	2	$9,000	$18,000
18	Catch Basin & Apron, Type N , Single (P-1570)	ea	1	$1,800	$1,800
19	Pipe Collar (MAG-505)	ea	32	$350	$11,200
20	Large Diameter Plugs (MAG-427)	ea	2	$1,000	$2,000
21	Curb and Gutter, Type 'A', H=6" (MAG-220)	feet	942	$5.50	$5,180
22	Concrete Sidewalk (P-1230)	sq ft	4,710	$2.50	$11,780
23	Pavement Replacement, C-3/4 x 2" Thick	sq yd	2,117	$24.00	$50,810
24	Permanent Pipe Support (MAG-403-1&2)	ea	5	$660	$3,300
25	Adjust Valve Box & Cover (MAG-270)	ea	12	$250	$3,000
26	Adjust Man Hole Frame & Cover (MAG-270)	ea	8	$250	$2,000
27	Survey Marker, Type 'B' (MAG-120-1)	ea	8	$150	$1,200
28	8 Inch Vitrified Clay Pipe Sewer Relocation	feet	200	$18	$3,600
29	Channel Excavation	cu yd	1,200	$3.00	$3,600
30	Traffic and Access Control	job	1	$30,000	$30,000
31	Survey	Job	1	$30,000	$30,000
32	Uniformed Off-Duty Law Enforcement	hour	100	$21	$2,100
33	Allowance for EXTRA Work	Job	1	$50,000	$50,000
34	Allowance for Quality Control & Testing	Job	1	$50,000	$50,000
35	Allowance for Public Information and Notification	Job	1	$20,000	$20,000
36	Mobilization	job	1	$10,000	$10,000
	Subtotal				$1,547,200
	Contingencies	job	20%		$309,440
	Engineer's Opinion of Construction Cost				$1,856,640

Morrison-Maierle/CSSA, Inc. 19-Jan-90

APPENDIX B - DRAINAGE MAP

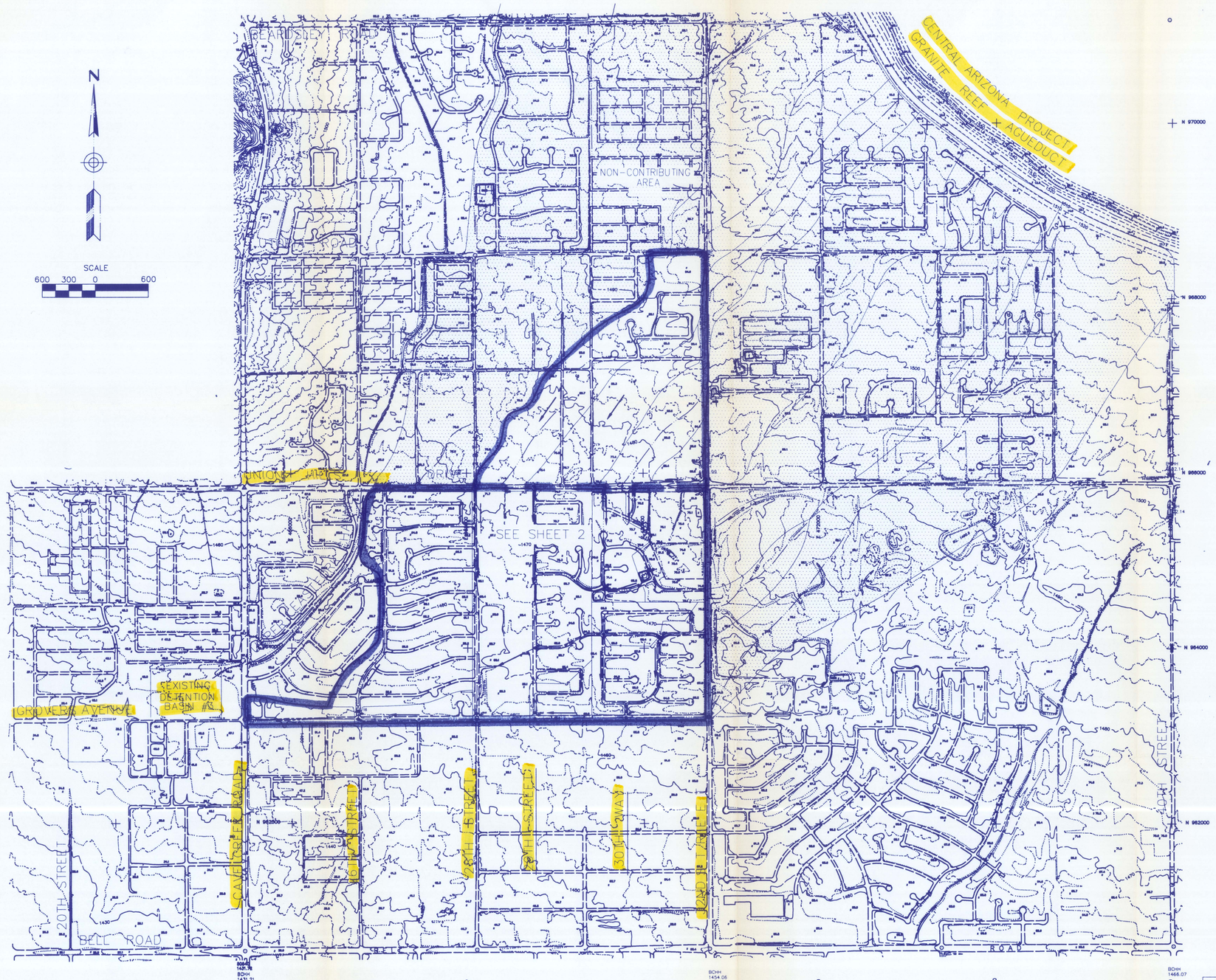

	NAME	DATE
DESIGNED BY	B.J.F.	01/94
DRAWN BY	M.L.	01/94
CHECKED BY	B.J.F.	01/94

FLOOD CONTROL DISTRICT OF MARICOPA COUNTY

Morrison Maierle/CSSA INC.

100 YEAR DRAINAGE MAP

PROJECT No. 8156.001

GROVERS AVENUE STORM DRAIN

1 OF 2

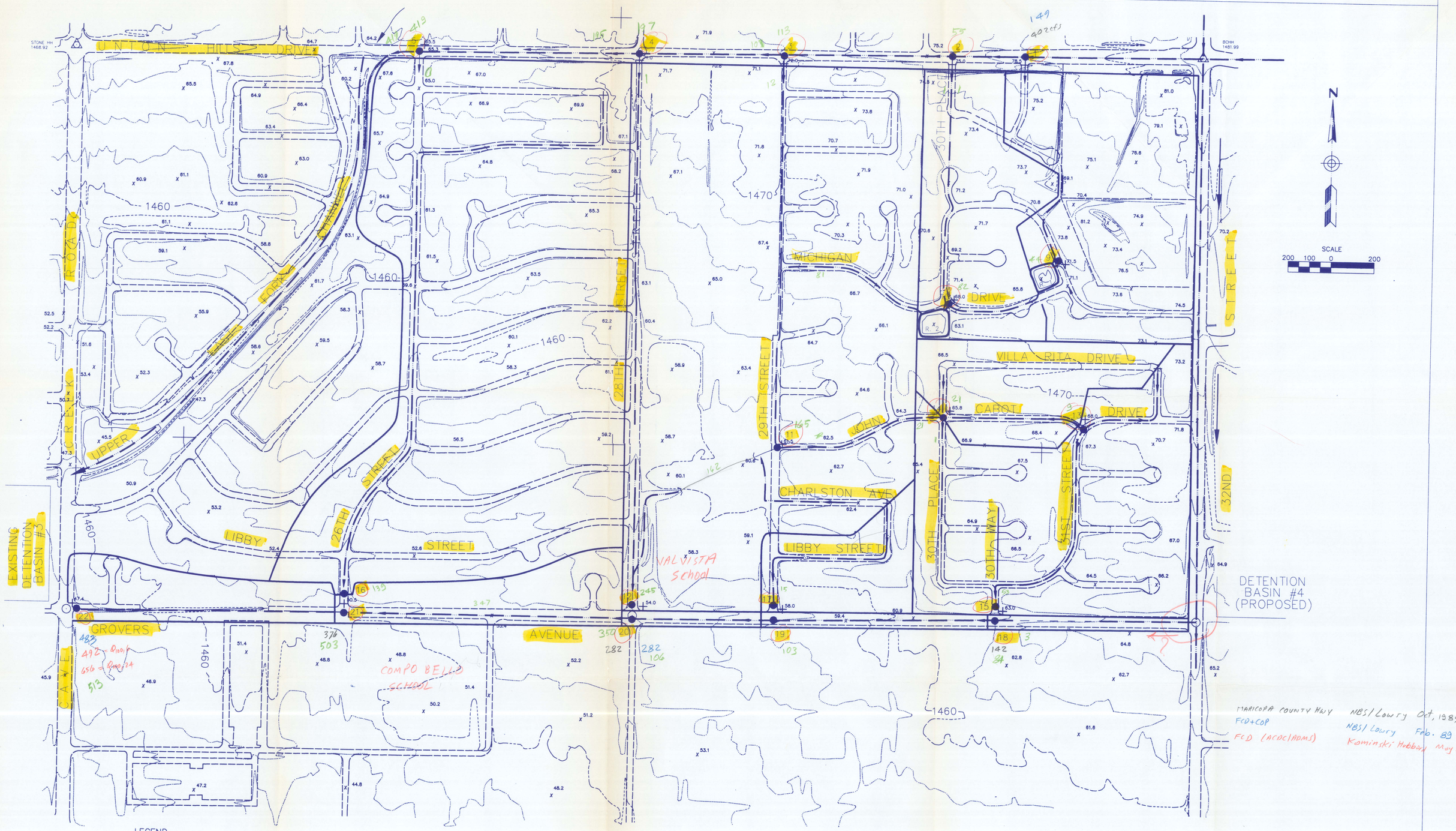

LEGEND

- CONCETRATION POINT
- STREAM FLOW
- DRAINAGE BOUNDARY
- 57.4 UPSTREAM ELEVATION
- 53.2 DOWNSTREAM ELEVATION

	NAME	DATE
DESIGNED BY	B.J.F.	01/94
DRAWN BY	M.L.	01/94
CHECKED BY	B.J.F.	01/94

Morrison Maierle/CSSA INC.

PROJECT No. 8156.001

FLOOD CONTROL DISTRICT OF MARICOPA COUNTY

100 YEAR DRAINAGE MAP

GROVERS AVENUE STORM DRAIN

2 OF 2

APPENDIX C - HYDRAULIC PROFILE MAP

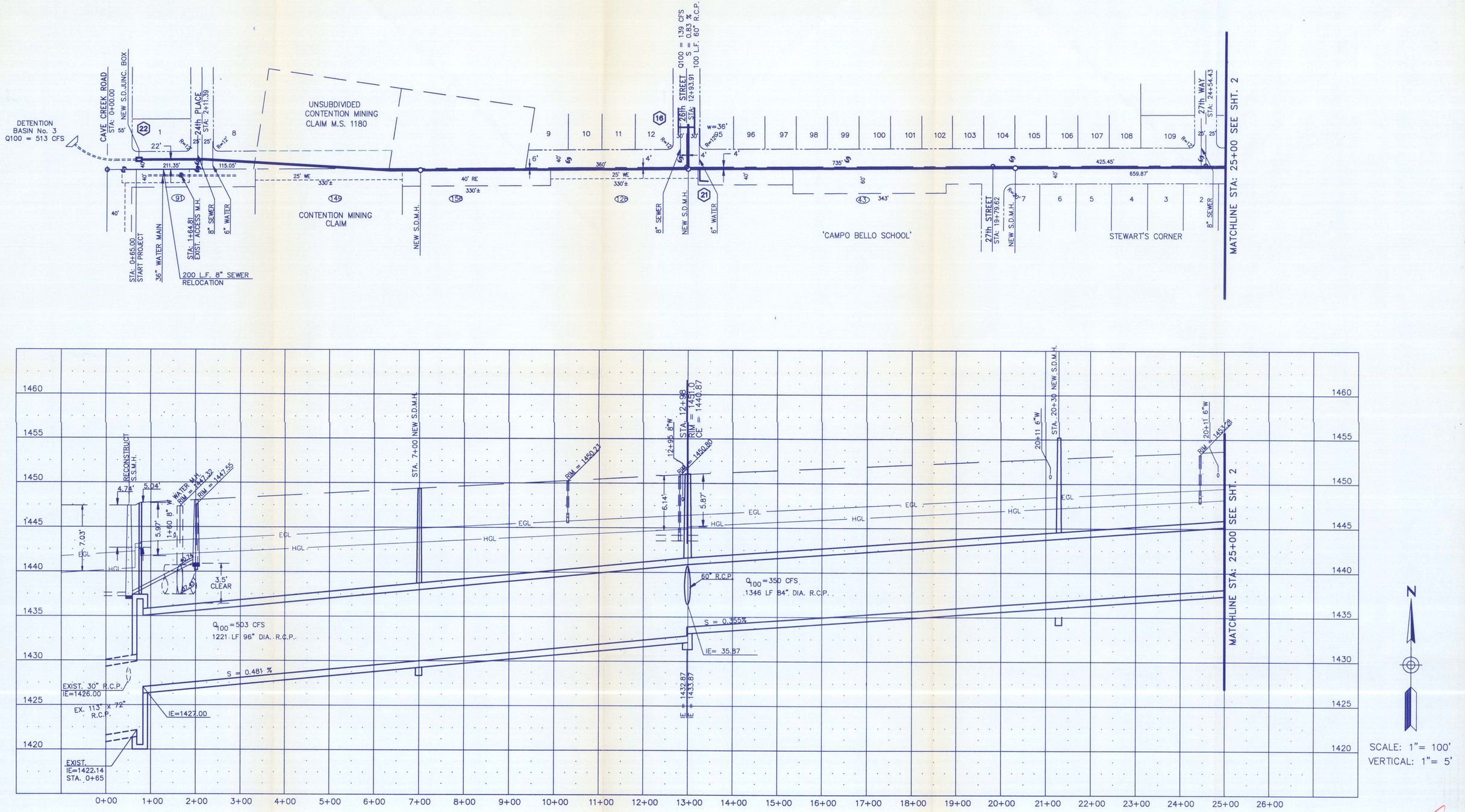

	NAME	DATE
DESIGNED BY	A.D.B.	1/94
DRAWN BY	C.M.M.	1/94
CHECKED BY	B.J.F.	1/94

Morrison Maierle/CSSA INC.

FLOOD CONTROL DISTRICT OF MARICOPA COUNTY

HYDRAULIC PROFILE MAP

PROJECT No. 8156.001

GROVERS AVENUE STORM DRAIN

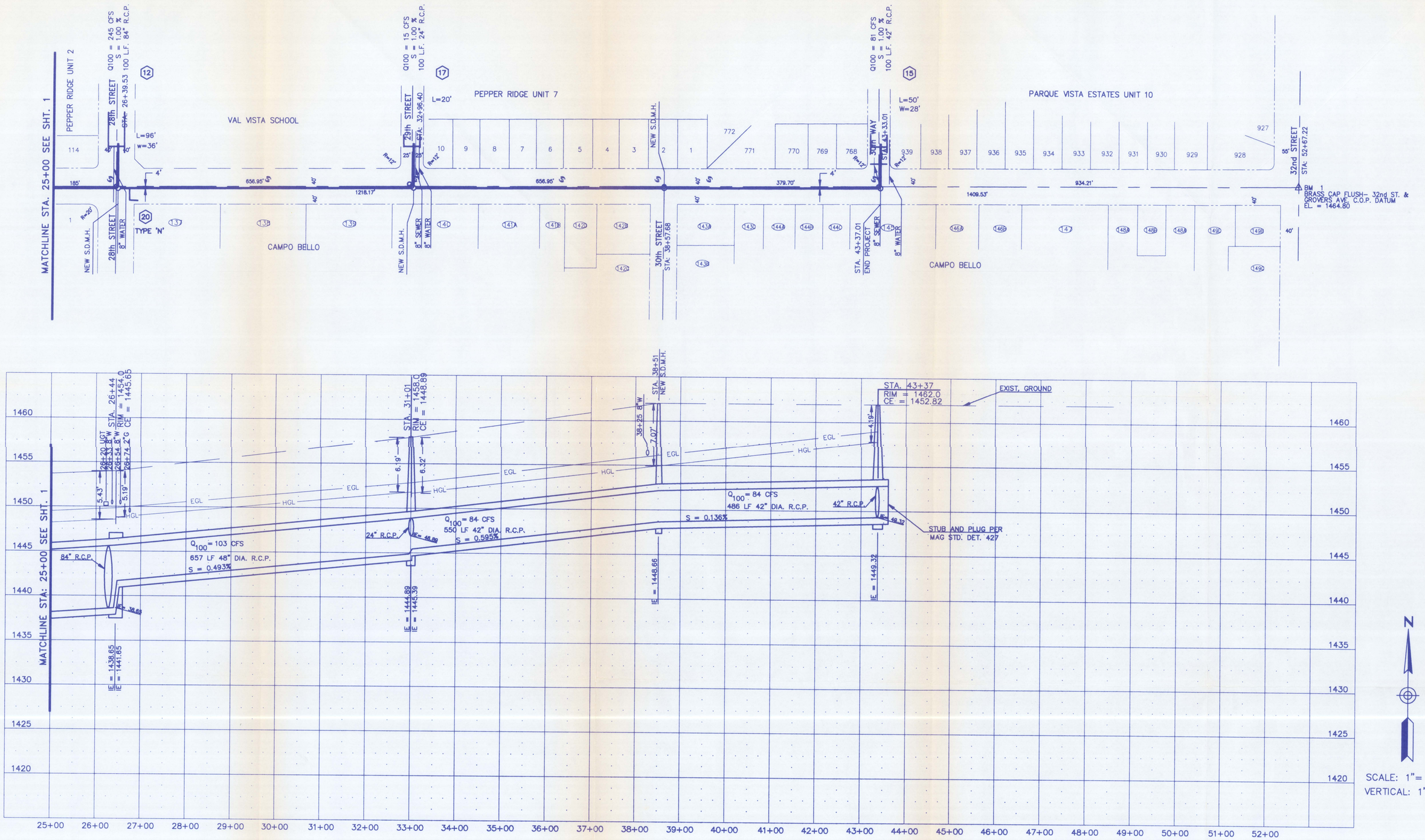

	NAME	DATE
DESIGNED BY	A.D.B.	1/94
DRAWN BY	C.M.M.	1/94
CHECKED BY	B.J.F.	1/94

FLOOD CONTROL DISTRICT OF MARICOPA COUNTY

Morrison Maierle / CSSA INC.

HYDRAULIC PROFILE MAP

PROJECT No. 8156.001

GROVERS AVENUE STORM DRAIN

2 OF 2

C:\DWG\GROVERS\VTDRPROZ.DWG AG 1/24/94

APPENDIX D - RIGHT-OF-WAY MAP

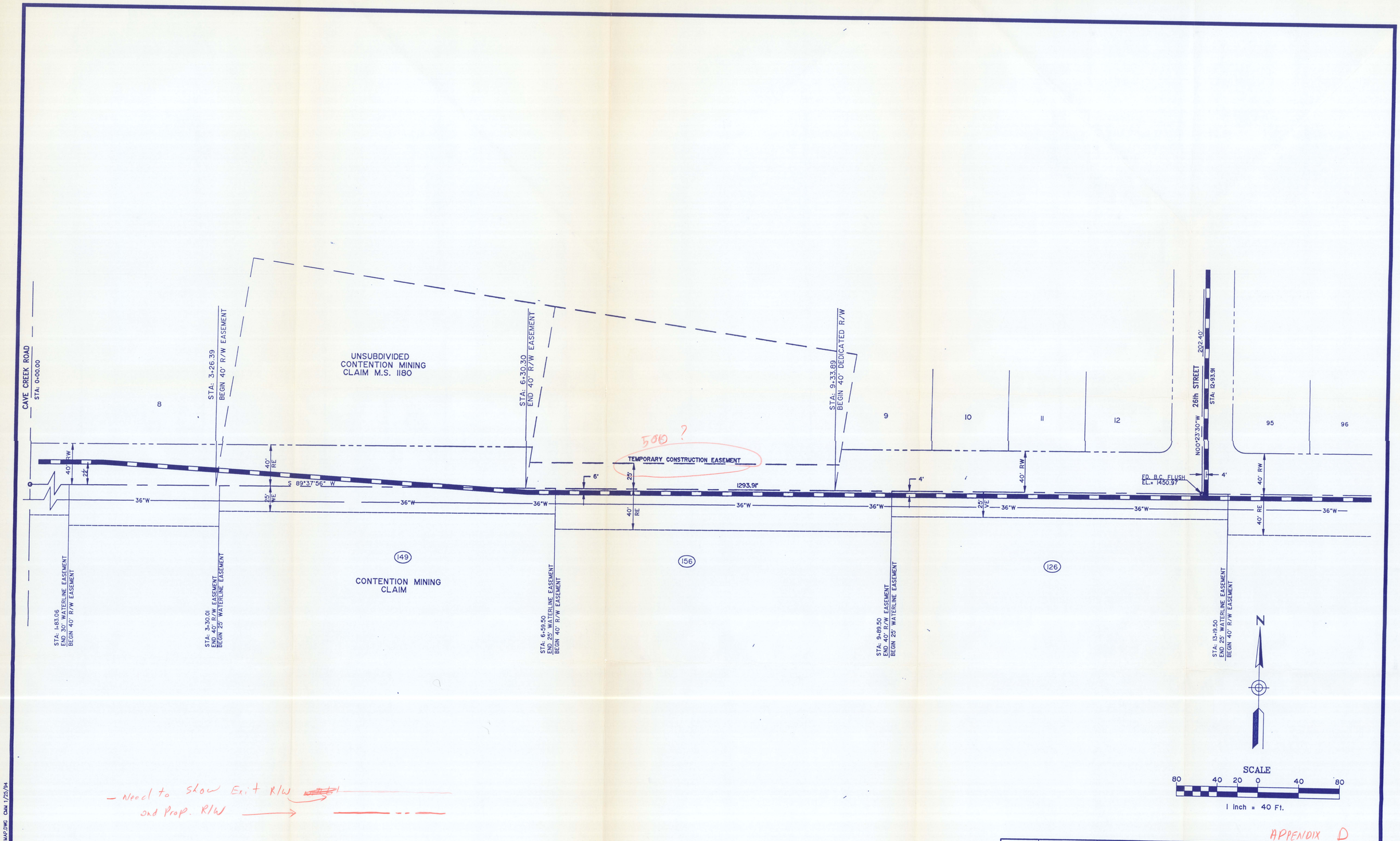

– Need to show Exit R/W
and Prop. R/W

APPENDIX D

	NAME	DATE
DESIGNED BY	B.J.F.	1/94
DRAWN BY	C.M.M.	1/94
CHECKED BY	B.J.F.	1/94

Morrison Maierle / CSSA INC.

FLOOD CONTROL DISTRICT
OF
MARICOPA COUNTY

RIGHT–OF–WAY MAP

PROJECT No. 8156.001

GROVERS AVENUE STORM DRAIN

1 OF 1

C:\DWG\GROVERS\ROW-MAP.DWG CMM 1/25/94