Property of
Flood Control District of MC Library
Please Return to
2801 W. Durango
Phoenix, AZ 85009

# ADDENDUM NO. 1

# CONCEPT REPORT

# FLOOD MITIGATION STUDY AT THE 91ST AVENUE WASTEWATER TREATMENT PLANT

Index No. S-931105
Contract No. 64993

Prepared for:

City of Phoenix
Water Services Department
200 West Washington - 8th Floor
Phoenix, Arizona 85003

Prepared by:

SIMONS, LI & ASSOCIATES, INC.
4600 South Mill Avenue, Suite 200
Tempe, Arizona 85282
(602) 491-1393

Registered Professional Engineer (Civil) CERTIFICATE NO. 21560 DENNIS L. RICHARDS Date Signed 10-28-94 ARIZONA, U.S.A.

October, 1994

Registered Professional Engineer (Civil) CERTIFICATE NO. 24767 ROBERT A. EICHINGER DATE SIGNED 10-28-94 ARIZONA, U.S.A.

# TABLE OF CONTENTS


| | | Page |
|---|---|---|
| LIST OF FIGURES | | ii |
| LIST OF TABLES | | ii |
| I. | INTRODUCTION | 1 |
| | A. Authorization and Purpose | 1 |
| | B. Scope of Work | 1 |
| II. | SUPPLEMENTAL CONCEPTS | 2 |
| | A. Outfall Gate | 2 |
| | B. Levee Pumps | 6 |
| | C. Headworks Bypass | 6 |
| | D. North Retention Basin | 8 |
| | E. Traffic Barriers | 11 |
| III. | COST SUMMARY | 13 |

Addendum No. 1 Appendix


Registered Professional Engineer (Civil) CERTIFICATE NO. 21560 DENNIS L. RICHARDS Date Signed 10-28-94 ARIZONA, U.S.A.

Registered Professional Engineer (Civil) CERTIFICATE NO. 24767 ROBERT A. EICHINGER DATE SIGNED 10-28-94 ARIZONA, U.S.A.

## LIST OF FIGURES


| Figure No. | | Page |
|---|---|---|
| 1. | Concept Headwall Structure | 5 |
| 2. | Concept Portable Levee Pump | 7 |
| 3. | SAI/Intertie Concept Bypass | 9 |
| 4. | Headworks Concept Bypass | 10 |


## LIST OF TABLES


| Table No. | | Page |
|---|---|---|
| 1. | Outfall Gate Comparison | 4 |
| 2. | Basin Volume Summary | 11 |
| 3. | Cost Summary | 13 |


Registered Professional Engineer (Civil) CERTIFICATE NO. 21560 DENNIS L. RICHARDS 94 Date Signed 10-28-94 ARIZONA, U.S.A.

Registered Professional Engineer (Civil) CERTIFICATE NO. 24767 ROBERT A. EICHINGER DATE SIGNED 10-28-94 ARIZONA, U.S.A.

# I. INTRODUCTION

The Concept Report for the Flood Mitigation Study at the 91st Avenue Wastewater Treatment Plant (Simons, Li & Associates: May, 1994) presented the results of a detailed engineering alternatives analysis and recommended a preferred level of flood protection for the 91st Avenue WWTP. The analysis included developing flood mitigation alternatives for on-site drainage, off-site drainage, and Salt River levee/bank protection.

The recommendations of the Concept Report were presented to the Sub-Regional Operating Group (SROG) at their June, 1994 meeting. As a result of the meeting SROG recommended to the City of Phoenix that additional items be investigated. This Addendum No. 1 to the Concept Report presents the results of the additional investigation.

## A. Authorization and Purpose

The Concept Report and Addendum No. 1 for the Flood Mitigation Study at the 91st Avenue Wastewater Treatment Plant was authorized by the City of Phoenix under Contract No. 64993. Simons, Li & Associates, Inc. (SLA) conducted the investigation for this Addendum No. 1 to the Concept Report.

## B. Scope of Work

The City of Phoenix directed SLA to investigate several supplementary concept work items as part of the Flood Mitigation Study. These items include: (1) providing an outfall gate at the downstream end of the combined effluent outfall channel; (2) investigating the cost of levee pumps to pump treated effluent over the proposed Salt River north bank; (3) bypassing the treatment plant headworks with an emergency outfall gate; (4) estimating the storage volume of the North Retention Basin; and (5) providing a cost estimate for concrete jersey barriers as discussed in the Emergency Response Plan. Cost estimates were prepared for the concepts investigated except for item 4.

## II. SUPPLEMENTAL CONCEPTS

### A. Outfall Gate

The purpose of the outfall gate(s) are to prevent high flood stages in the Salt River from impacting the 91st Avenue Wastewater Treatment Plant operations and flow-stream hydraulics. During flood stages in the river, the outfall gates would be closed to prevent the Salt River from backing up into the combined effluent outfall channel.

The proposed location of the outfall gates is downstream of the EPA monitoring station and upstream of 91st Avenue. The gates would be integral with or mounted onto a reinforced concrete headwall. The height of the headwall would match the elevation of the proposed Salt River north bank. This elevation provides three feet of freeboard over the 100-year water surface elevation in the Salt River at 91st Avenue.

A reinforced concrete headwall is required for the outfall gates. The types of gates evaluated for this Addendum include: flap gates, sluice gates, fabricated roller gates, and stop logs. The number and size of gates required are based on the assumption of 300 mgd (465 cfs) flow in the combined effluent outfall channel. The invert of the gates would match the floor invert of the proposed lining of the effluent outfall channel.

#### 1. Flap Gates

Flap gates are installed at outfalls for the purposes of preventing the back-flooding of the conveyance (combined effluent outfall channel) facility by high stages in the receiving stream (Salt River). A properly operating flap gate may make it possible to continue to discharge flows even though flood conditions prevail at the outlet from the plant. However, it is envisioned that during normal operation the flap gates would remain in the open position secured by steel cable. The gates would remain open until it is deemed necessary to lower the gates to prevent Salt River back water from entering the outfall channel.

Flap gates for flood control purposes are made of cast iron or steel. The gates are commercially available in sizes up to 8 feet in diameter. Flap gates are hinged by a link-type arrangement to allow the gate shutter to set securely. Hinge pins, linkages, and seats should be corrosion resistant.

The maintenance of flap gates requires regular inspection and removal of debris from the outlet works, lubrication of hinge pins, and cleaning of seating surfaces.

Flap gates may be furnished either square or round. The size of gates investigated included 48-inch, 54-inch, 60-inch, and 72-inch square and round gates. The number of gates required would be two 72-inch, three 60-inch, four 54-inch, or five 48-inch gates. The cost of round gates is generally lower for the 60-inch and smaller gates while the 72-inch square gates are less than the 72-inch round gates. The recommended flap configuration is three 60-inch round flap gates installed on the reinforced concrete headwall.

2. Sluice Gates

A sluice gate is typically used against a wall between two basins or between a pipeline and open channel (e.g., combined effluent outfall channel). A sluice gate typically consists of a frame mounted to a headwall, sliding gate, lifting stem, and actuator. Sluice gates have been used successfully in a wide variety of applications, including municipal and regional sewage treatment plants, municipal water works and treatment facilities, and flood control projects.

Gate shapes include square or rectangular with square, rectangular or circular openings, and can be furnished with flat back or flange back frames. Gates are typically manufactured from cast iron or steel and can be coated to resist corrosion depending on the application of the gate.

It is envisioned that during normal operation the sluice gate(s) will remain in the fully open position. The gates would be closed only in the event of high stages in the receiving stream (Salt River).

The maintenance of sluice gates requires regular inspection and removal of debris from the outlet works, gate frame, lubrication of steam and actuator, and cleaning of seating surfaces.

3. Fabricated Roller Gates

Roller gates are suited for controlling water in any large opening such as may be found in power plants, water and sewage treatment facilities, and flood control projects. Roller gates are available in either overflow or breastwall type. They are manufactured to be downward or upward opening.

The gate leaf or movable part of the gate is a flat structural steel plate bar which the structural members are welded into a boxlike construction for rigidity and lateral strength. Rollers are mounted on each side of the gate. The number and sizes of rollers are determined by the size of the gate and the operating load. The rollers operate against rails attached to the concrete or to the embedded member at the sides of the gate opening. Actuators for the roller gate may be manually operated crank or hand-wheel type, electrically driven, or hydraulically actuated.

Roller gates are pre-fabricated by the manufacturer or are fabricated at the shop according to dimensions required by the construction plans. Roller gates are generally more heavy-duty in application than flap or sluice gates. Due to construction techniques, installation, and the large size and bulk of roller gates; the relative cost is much greater than flap or sluice gates.

4. Stop Logs

Stop logs are manufactured from steel, stainless steel, and aluminum. Stop logs are often used to control flows in open channels and reservoirs. A resilient seal along the bottom of each log seals on the sill plate or top of another log. Side seals are generally incorporated into the logs or guides to provide for low leakage requirements.

Guides are normally embedded in a concrete headwall structure, but can be designed for wall mounting with anchor bolts.

Stop logs are placed and removed by a log lifting device and overhead crane on larger sizes. A gantry may be used in-lieu of an overhead or mobil crane.

Rental for a crane of sufficient capacity (25 ton) to place and remove the stop logs (or bulkheads) would cost approximately $115 per hour. A local crane rental company quoted it would take 3 hours to complete a placement job, and 3 hours to complete a removal job. The 3 hours consist of 2 hours of travel (to-and-from equipment yard to 91st Avenue WWTP), and 1 hour of placement or removal. The total cost of crane rental is $345 plus tax.

## 5. Recommendation

As stated above, the recommended outfall gate configuration is three 60-inch flap gates mounted on a reinforced concrete headwall. The headwall structure would be constructed across the combined effluent outfall channel and would be founded into the proposed channel banks and channel lining. Figure 1 illustrates the outfall gate/headwall structure to be constructed across the outfall channel. The dimensions of the headwall depend on the final design section for the outfall channel.

The cost for three 60-inch flap gates was estimated to be $7,400 per gate (total $22,200). The headwall structure was cost estimated at $290,000.00 (including steel and concrete). The total outfall structure is estimated at $312,200.

Cost estimates for the flap gates were developed with the assistance from a gate manufacturer. The manufacturer stated the costs of sluice gates, roller gates, and stop logs would be much greater versus flap gates for the application purpose of backwater prevention. Table 1 provides a brief comparison summary of the outfall gates investigated in this Addendum.

**Table 1. Outfall Gate Comparison.**

| Gate Type | Ease of Operation | Ease of Maintenance | Suitability of Function | Constructability | Relative Cost |
|---|---|---|---|---|---|
| Flap | Hydraulic/Need to Prop Open | Exercise Occasionally | OK | Mount to Headwall - Easiest | Least |
| Sluice | Manual or Automatic | Exercise Occasionally | OK | Mount to Headwall | Moderate |
| Roller | Recommend Automatic | Tracks need to be free of debris | OK | Tracks located inside Headwall | High |
| Stop Logs | Need lifting device (crane) | Tracks need to be free of debris | Leakage Concerns | Tracks located inside Headwall | Moderate |

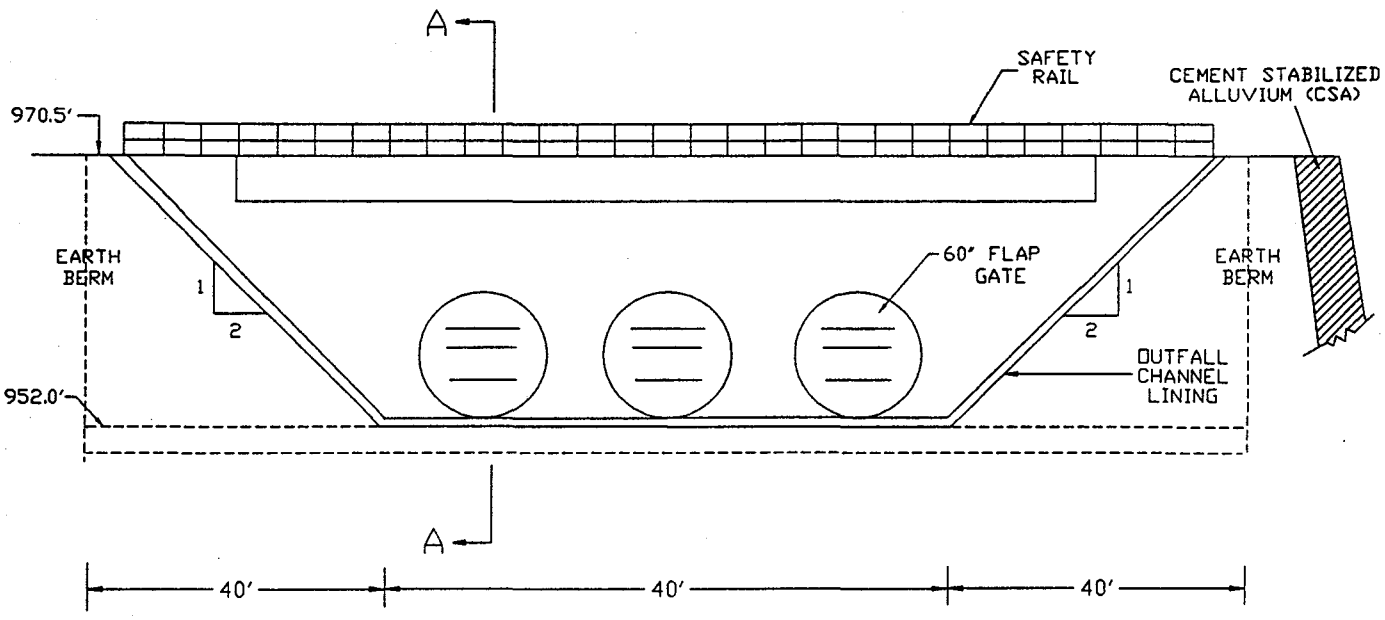


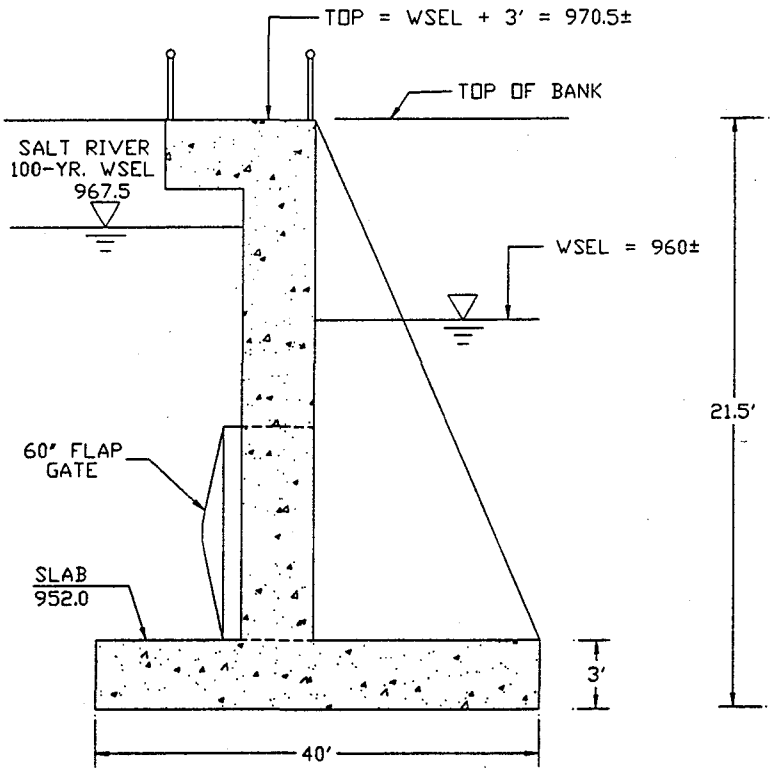


SECTION A-A

* Schematic Only
NOT TO SCALE

**FIGURE 1. CONCEPT HEADWALL STRUCTURE**

## B. Levee Pumps

A method of discharging the combined outfall effluent to the Salt River would be required when the outfall gates discussed above are closed. The only non-permanent method would be to use portable pumps with drive units to be located on top of the proposed north bank of the Salt River. The portable pumps would lift the combined outfall effluent over the Salt River north bank and discharge the effluent to the river.

The concept of levee pumps was investigated as part of the Emergency Response Plan. Data was collected to estimate the rental cost of portable pumps sufficient to pump a flow rate of 200 mgd. Price quotes were obtained for a pump system configuration that included 11 pumping units. An array of pumping configurations was developed to provide flexibility to accommodate diurnal fluctuations of the outfall effluent, and due to the low market availability of large portable levee pumps.

Figure 2 illustrates the concept of a portable levee pump. The basic unit consists of an intake bell submerged in the combined outfall channel effluent, a discharge pipe that discharges the pumped effluent to the Salt River, and a drive unit housing the control panel, diesel engine, and hydraulic transmission quick couplers.

The Emergency Response Plan determined that two units of stacked 42-inch pumps capable of a total pumping capacity of 100 mgd, one unit of stacked 30-inch pumps capable of a total pumping capacity of 25,000 gpm, four units of 24-inch single stage pumps capable of a total pumping capacity of 48,000 gpm, and four units of 16-inch pumps capable of a total pumping capacity of 28,000 gpm would be required for a grand total pumping capacity of 200 mgd. Again, this array of pumping units is due to the low market availability of large portable diesel powered pumps.

The Response Plan documentation estimated a total 30-day rental price of the above equipment of $168,000. This price includes rental of discharge and intake pipe and pipe elbows. It does not include freight from the supplier. The supplier indicated the possibility that two more stacked 42-inch pumps may become available. If this occurred, the rental cost quote could be reduced by as much as $30,000. The cost quote developed as part of the Response Plan is included in the Appendix.

## C. Headworks Bypass

The Emergency Response Plan outlined the procedures to implement should it be required to divert influent (raw sewage) to the North Retention Basin. One of the steps to initiate flows to the basin is to remove a knockout wall at the headworks just upstream of the bar screens. This knockout wall is attached to the headworks channel with angle plates bolted into the concrete walls. Lifting rings on the knockout wall are provided so that a crane may remove the wall after it is unbolted.

The City of Phoenix and SROG requested that a permanent headworks bypass be investigated to reduce the time and effort required to release influent to the retention basin and not to rely on the availability of a lifting crane.

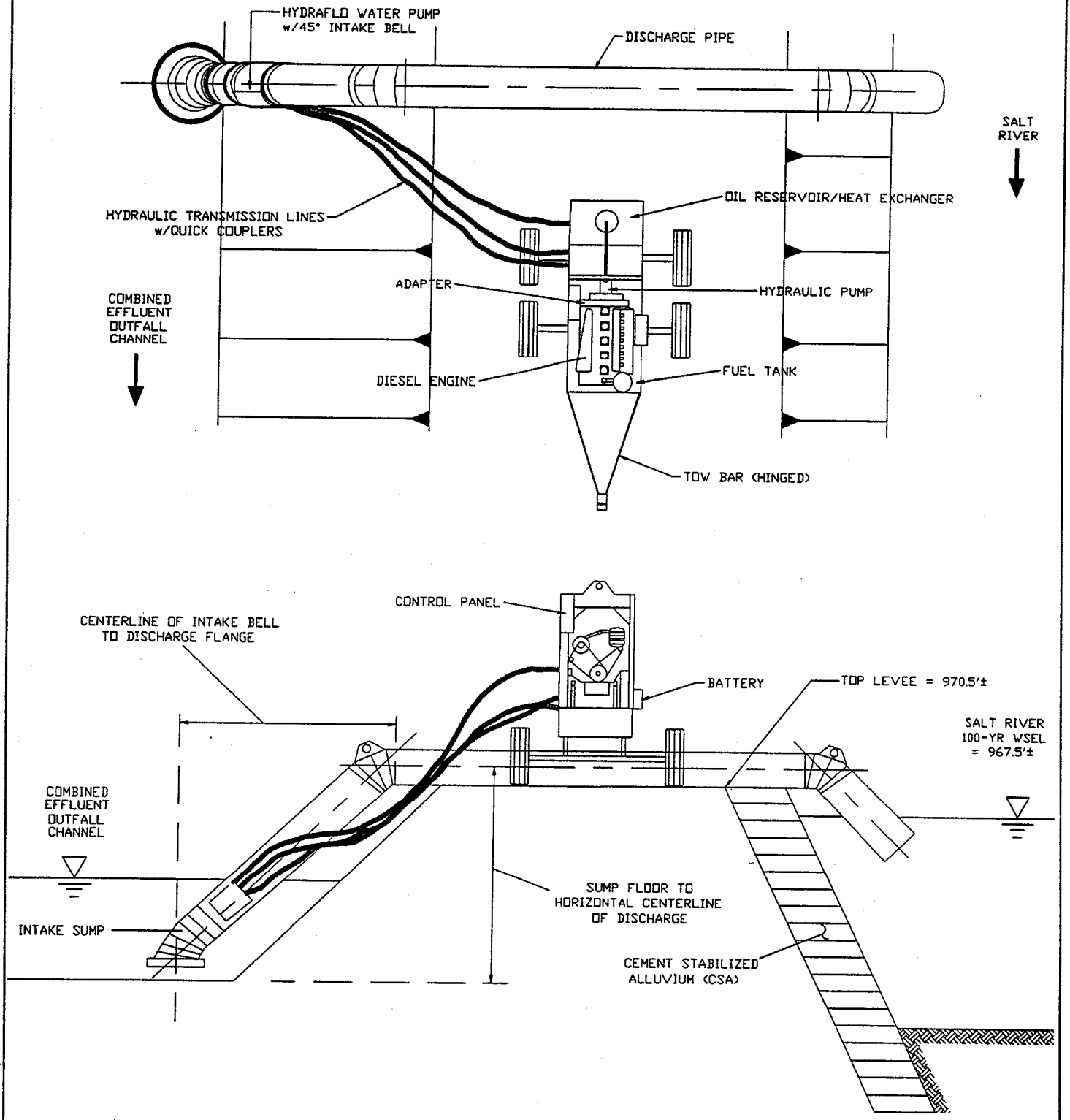


* Schematic Only
NOT TO SCALE

**FIGURE 2. CONCEPT PORTABLE LEVEE PUMP**

The bypass will consist of a gated outfall structure. There are two potentially feasible locations for a permanent bypass: (1) provide a bypass structure at the existing headworks knockout wall, and (2) provide a bypass structure at the north wall of the SAI/Intertie. A review of the Plant III A 30 mgd expansion plans and recent field trips indicate that both of these locations could potentially outfall to the retention basin. Extensive channeling would be required to provide the grade necessary to divert influent from the proposed bypass to the basin.

Figures 3 and 4 illustrate the bypass structure concept at the SAI/Intertie junction box, and at the headworks knockout wall. The headworks bypass basically consists of a headwall structure constructed to be integral with the existing structure. Sluice gates are proposed to be mounted on an extended headwall structure or directly to the existing walls. The gates will be coal-tar epoxy coated and shall be provided with motorized gate lifts for ease of operation, maintenance, and exercise.

As stated previously, it will be necessary to construct an earth channel from the bypass structure to the North Retention Basin. The existing ground elevations at the proposed headworks bypass structures are above the floor inverts of the headworks and the SAI/Intertie junction box.

A sluice gate manufacturer recommended that one (1) 10-foot by 10-foot sluice gate be provided at the SAI/Intertie. The size of gate was configured to provide capacity sufficient to pass 300 mgd (465 cfs). The junction structure would require minimal modification depending on construction clearance and constraints to mount the sluice gate. The estimated cost of a 10-foot by 10-foot sluice gate is $48,000 including hardware and automatic lift operator. The total cost of providing a bypass at the SAI/Intertie is estimated to be $53,000.

The gate manufacturer also recommended the same size sluice gate at the headworks knockout wall. The sluice gate is a cast iron self-contained gate with flush bottom seal. Again, the headworks location will need minimal modification to provide a mounting surface for the sluice gate. The total estimated cost of providing a permenant headworks bypass at the knockout wall area is estimated to be $53,000. The options shown in Figure 3 and Figure 4 for sluice gate mounting have minimal cost differences. They are options for mounting locations.

A temporary diversion channel would be constructed from the bypass structure to the north retention basin. A 60-foot section of roadway along the north-south roadway adjacent to the headworks would be removed according to the Emergency Response Plan. The cost of constructing the temporary channel was based on a 30-foot wide bottom, 2:1 (H:V) side slopes, and a length of approximately 1400 feet. The estimated cost is $23,700 ($3/lineal foot of channel).

## D. North Retention Basin

The area referred to as the "North Retention Basin" is located north of the main access road, south of the north access road, and west of the central headworks. This area has been designated in the Emergency Response Plan as the area/basin that will provide temporary storage of diverted raw influent. Before the retention basin capacity is reached, a berm located at the main plant entrance will be mechanically breached to allow the influent to be discharged down along the west side of 91st Avenue, via a temporary constructed channel, to the Salt River.

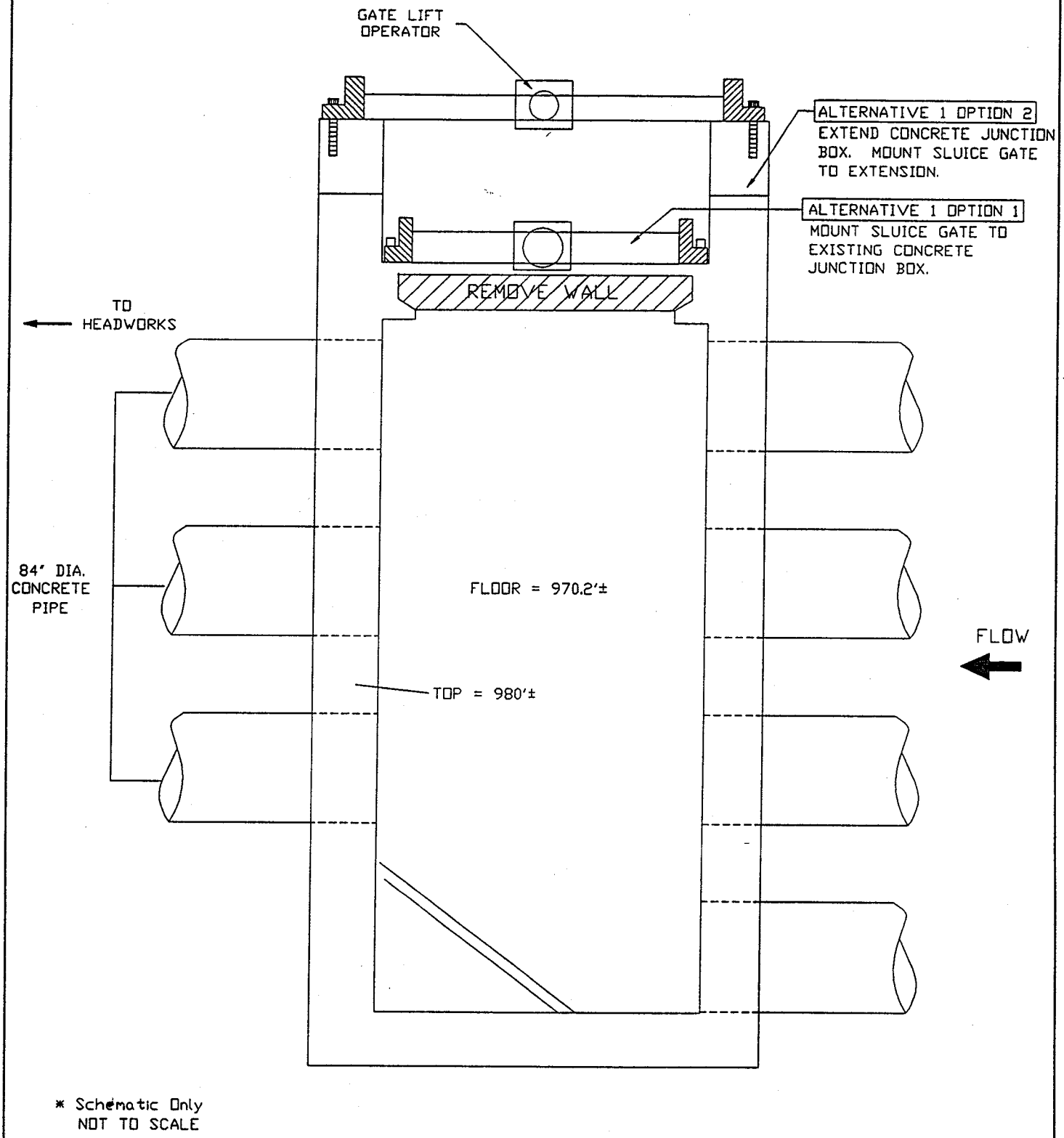


* Schematic Only
NOT TO SCALE

**FIGURE 3. SAI/INTERTIE CONCEPT BYPASS**

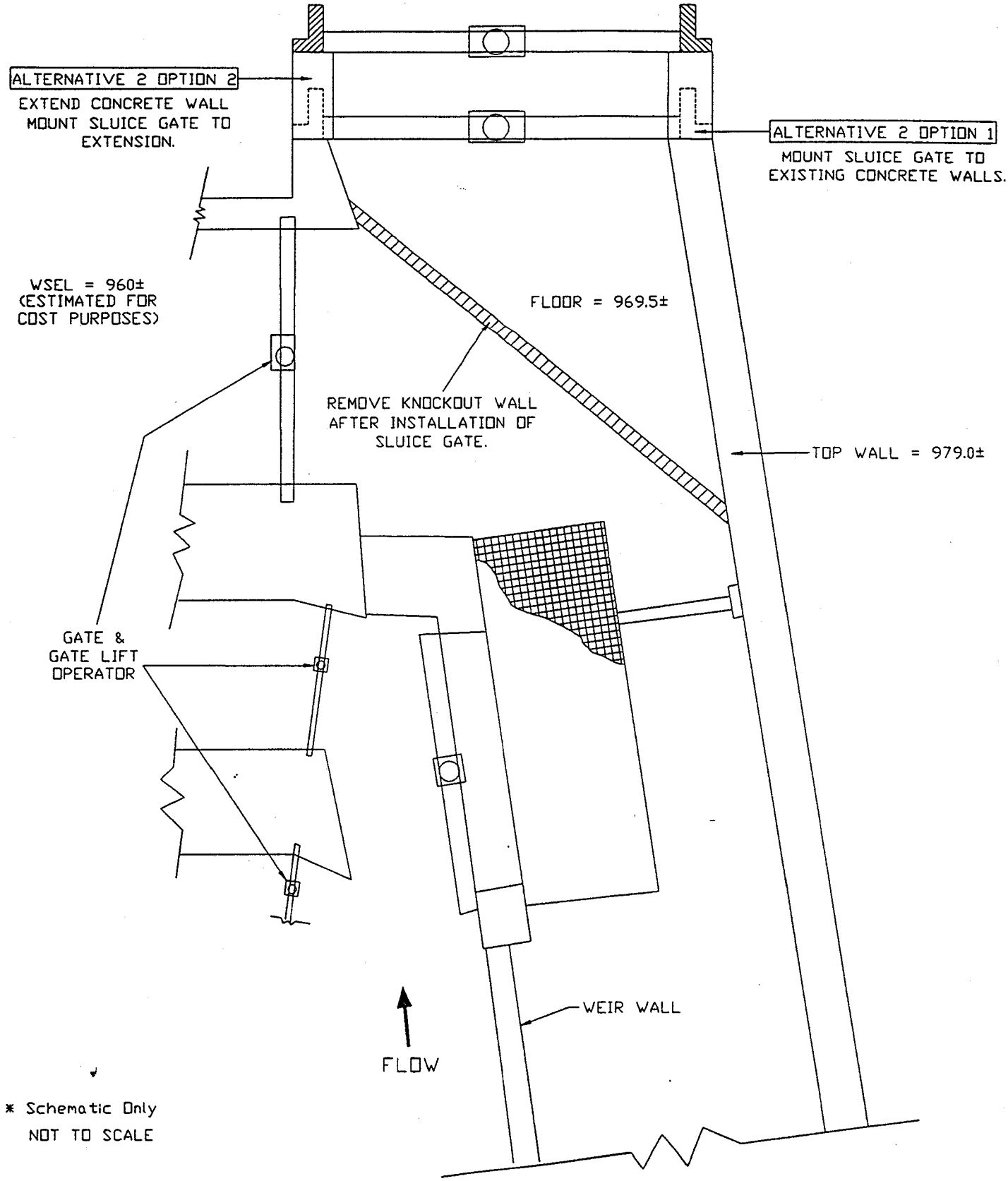


**FIGURE 4. HEADWORKS CONCEPT BYPASS**

The City of Phoenix expressed a concern regarding the storage capacity of the basin. A volume capacity estimate was conducted using observations collected during recent site visits, 1985 plans of the north access road, and 1986 plans for the Plant III-A expansion. The volume estimate is very cursory at best. Recent site improvements have stock piled soil within the basin. Grading of the area around the central headworks continues to displace, add, reshape, and reconfigure the basin invert, profile, and ground elevations.

The 1985 North Access Road plans and field observations indicate that a low spot exists just inside the perimeter fence at the North Access Road entrance off of 91st Avenue. There is a potential, should wastewater be diverted from the bypass structure, to fill the basin and overflow the low spot and allow flows to travel north and west out the North Access Road entrance. It was assumed for the volume calculations that an earth berm will be constructed on the south edge of the North Access Road to an elevation of 975 to prevent flows from being diverted north, and to ensure flows are diverted to the breached berm at the main plant entrance.

The storage volume capacity of the North Retention Basin was estimated assuming one foot of freeboard and a berm to elevation 975 will be constructed around the perimeter of the basin. Therefore, the water surface elevation would not exceed an elevation of 974. Based on field observations and the two previously mentioned plans, the North Retention Basin has an estimated capacity of 66 acre-feet. A calculation was made to determine the time to fill this volume for bypass flow rates of 100, 200, and 300 mgd. The time to fill is approximately 6, 3, and 2-hours, respectively.

A basin volume calculation was also conducted to determine the volume of basin required to completely store discharge rates of 100, 200, and 300 mgd for discharge durations of 3, 6, 12, and 24-hours. The required basin volumes are summarized in Table 2.

**Table 2. Basin Volume Summary (AF).**

| Discharge Rate (mgd) | Flow Duration (hrs) | | | |
|---|---|---|---|---|
| | 3 | 6 | 12 | 24 |
| 100 | 38 | 76 | 153 | 306 |
| 200 | 76 | 153 | 306 | 613 |
| 300 | 115 | 230 | 460 | 920 |

## E. Traffic Barriers

The Emergency Response Plan recommended that the North Retention Basin be breached at the main plant entrance. The breach in the basin berm would allow wastewater to flow down along the west side of 91st Avenue in a temporarily constructed channel. The channel would be constructed of concrete traffic (jersey) barriers making up the channel sides for 400 feet. Earthen

fill would be placed behind the barriers to form the bank height and prevent seepage of wastewater between abutted barriers. The length of channel section requiring the concrete barriers was called out in the Emergency Response Plan as 400 feet. The total length of required barriers is therefore 800 feet (2 sides times 400 feet).

For the purposes of cost estimating the rental or purchase of the jersey barriers, it was assumed a total length of 1000 feet of barriers would be required for a rental period of 7 days. The cost quote for renting 1000 feet of jersey barriers is based on $0.04 per lineal foot per day, $4.90 per lineal foot freight charge (one time charge), $0.94 per lineal foot set-up charge (crane and crew), and $0.94 per lineal foot removal charge (crane and crew). Based on 1000 feet of jersey barrier and 7-day rental period, the cost of renting is $7,100. The purchase price is $13,400 which includes freight and set-up. The cost derivation is provided in the Appendix.

The City of Phoenix Streets Transportation Department has stockpiled concrete barriers that were previously used in the former Phoenix Grand Prix. The barriers are currently stockpiled at the City's Del Rio Landfill. The Streets Transportation Department is seeking to sell the stockpile of concrete barriers. The barriers are 12 feet long, flat on one side and tapered on the other. They do not meet AASHTO requirements.

These barriers are available to other City of Phoenix departments free of charge using a property transfer. The Water Services Department may obtain the required lineal footage of barrier from the Streets Transportation Department with a property transfer. Discussions with Street Transportation staff indicate that the barriers are sufficient for the needs of the 91st Avenue WWTP. The staff person stated there are enough barriers to provide the WWTP with 1000 lineal feet. However, the stockpile is being rapidly sold off to potential outside buyers.

## III. COST SUMMARY

The following table provides a summary of the costs developed as part of this Addendum. Option 1 summarizes Construction/Rental Costs while Option 2 summarizes Construction/ Purchase Cost.

**Table 3. Cost Summary.**

| Option 1. Construction/Rental Cost | | |
|---|---|---|
| Outfall Gates | Flap Gates | $313,000 |
| Levee Pumps | 30-day Rental (200 mgd) | $168,000 |
| Headworks Bypass | Headworks/Intertie | $153,400 |
| Traffic Barriers | 30-day Rental (1000 ft) | $28,400 |
| | Subtotal | $662,800 |

| Option 2. Construction/Purchase Cost | | |
|---|---|---|
| Outfall Gates | Flap Gates | $313,000 |
| Levee Pumps | Purchase (200 mgd) | $800,000 |
| Headworks Bypass | Headworks/Intertie | $153,400 |
| Traffic Barriers | Purchase (1000 ft) | $13,400 |
| | Subtotal | $1,279,800 |

Salt River Bank Protection Cost (Cement Stabilized Alluvium) $1,298,000

Total Salt River Flood Protection Cost

| | |
|---|---|
| Option 1. | $1,960,800 |
| Option 2. | $2,577,800 |

**Addendum No. 1**
**Appendix**

**sla**
SIMONS, li & ASSOCIATES, INC.

CLIENT CITY PHX
PROJECT 91ST AVE WWTP
DETAIL OUTFALL CONCEPT

JOB NO. AZ-CPH-03
DATE CHECKED
CHECKED BY

PAGE 1
DATE 8/5/94
COMPUTED BY RAE

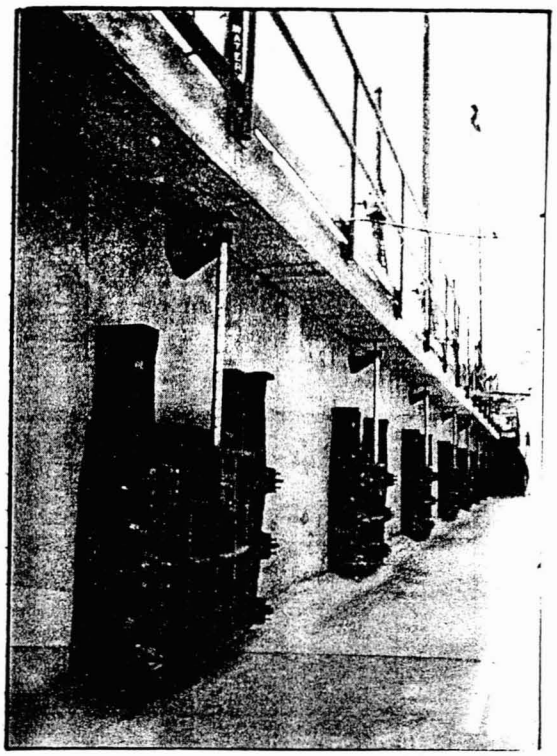

SLUICE GATE CONFIGURATION

FOR OUTFALL CHANNEL

(SAME CONCEPT FOR FLAP GATES)

MEDIUM DUTY

**sla**
SIMONS, LI & ASSOCIATES, INC.

CLIENT CITY PHX
PROJECT 91ST AVE WWTP
DETAIL OUTFALL CONCEPT

JOB NO. A2-CP11-03
DATE CHECKED
CHECKED BY

PAGE 2
DATE 8/5/94
COMPUTED BY RAB

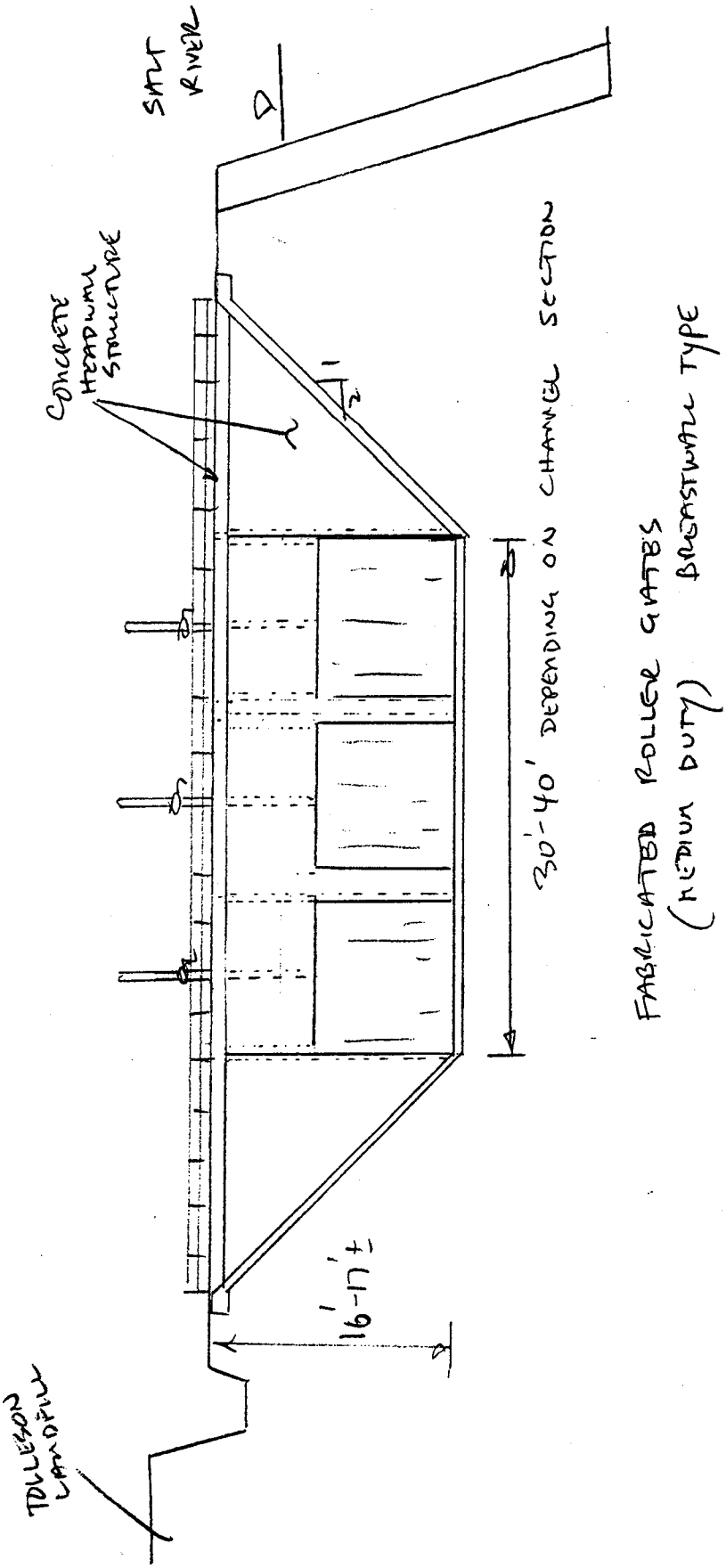

FABRICATED ROLLER GATES

Roller Gates are ideally suited for controlling water in any large opening such as may be found in power plants, water and sewage treatment facilities, flood control projects, irrigation systems, and on top of dams to increase reservoir capacity.

Waterman Roller Gates are available in either overflow or breastwall type. They are manufactured to be downward or upward opening. They may be engineered to take pressure from one or both sides of the gate.

## FABRICATION FEATURES:

The gate leaf or movable part of the gate is a flat structural steel plate for which the structural members are welded into a boxlike construction for rigidity and lateral strength.

Rollers are mounted on each side of the gate. The numbers and sizes of rollers are determined by the size of the gate and the operating head. Rollers may be single or double flanged type and are equipped with self lubricating bushings suitable for submerged operations.

The rollers operate against rails attached to the concrete or to the embedded members at the sides of the gate opening.

A J-seal is provided for sealing at the top and on each side of the gate. A flush compression type rubber seal is provided for the bottom of the gate. A stainless steel rub plate is provided wherever a sealing surface is in contact with the J-bulb seal.

Stems are provided in cold finish or stainless steel, depending on engineering requirements. They will be in single or tandem configuration as determined by gate dimensions and design preference.

Actuators for the roller gate may be of manually operated crank or handwheel type, electrically driven, or hydraulically actuated.

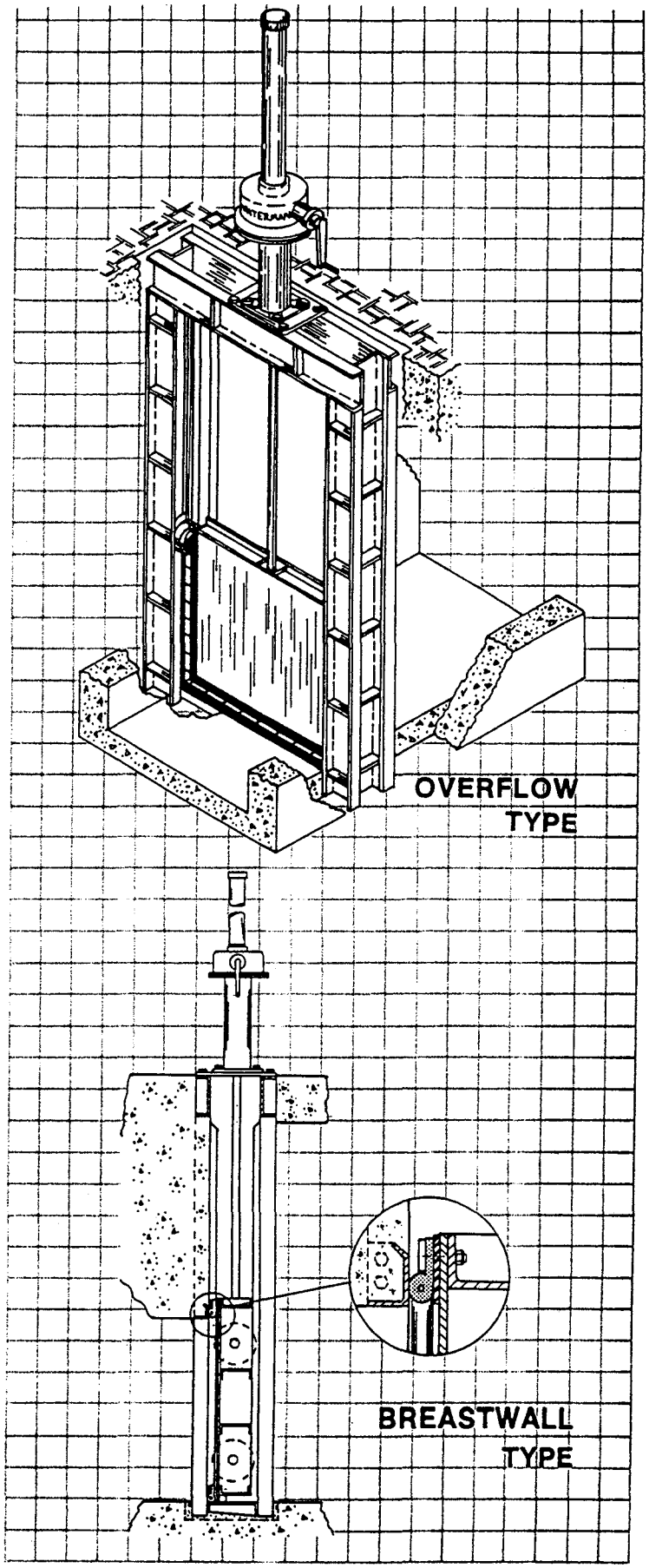

# MODELS AVAILABLE

## MODERATE DUTY ROLLER GATE:

The in-between gate — bridging the gap between slide gate and regular roller gate. Used when a roller gate is desired but the size and loading are not large. Used where gate would have a total hydraulic loading of 10,000 lbs. or less, and up to 30,000 lbs. on other gates depending on height.

Advantages include:

(a) Lower cost.

(b) Smaller slot cross-sectional area.

(c) Frame can usually be fabricated as rigid single piece weldment. This will ease installation and assure better alignment.

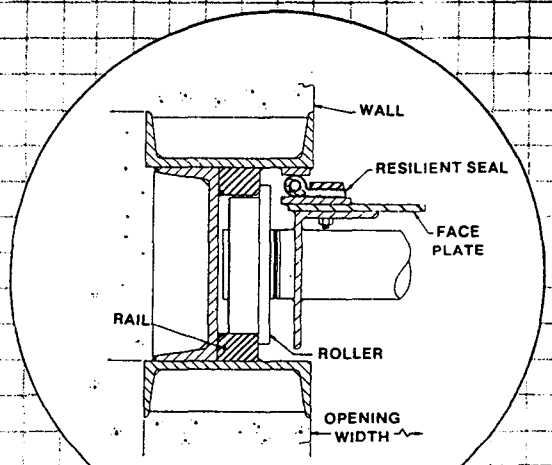


MODERATE DUTY

## HEAVY DUTY ROLLER GATE:

For heavy duty service where large loads and sizes are going to be encountered.

Double rail design standard unless otherwise specified. Roller size and slot cross-sectional area increases proportionally to gate size and hydraulic loading.

Larger gates are built in two pieces and shipped separately for field assembly. Due to large size, slots and cross rails also must be bolted together in field.

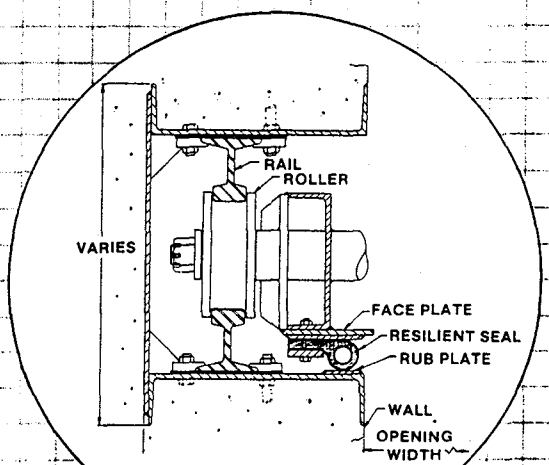


HEAVY DUTY

## SINGLE RAIL DESIGN AND DOWNWARD OPENING GATES:

Single rail design can also be provided. Less expensive than double rail design with fabricated steel slot, it only requires additional labor to set anchor bolts and assure proper alignment.

Seal mounted on frame is shown in detail at right. This seal arrangement is required on downward opening or skimmer type gates. Shown here with single rail design, it can be supplied just as easily with double rail design.

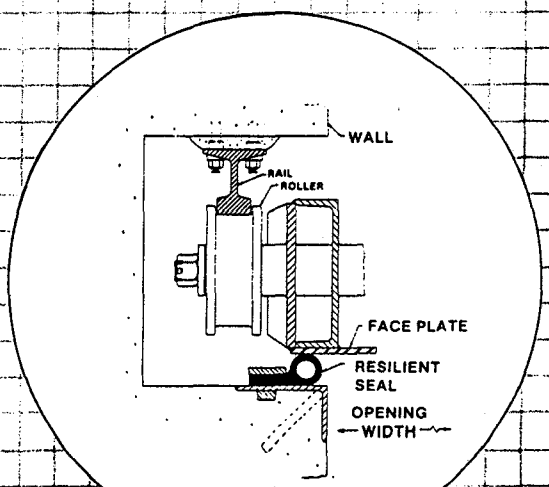


SINGLE RAIL DESIGN

## ROLLER GATES

WATERMAN ROLLER GATES are designed for controlling water in large openings, including flood control projects, power plant cooling systems, water and sewage treatment facilities, reservoir capacity expansion, and irrigation and industrial water control projects.

WATERMAN ROLLER GATES may be designed for upward or downward opening. Rollers are mounted on each side of the gate and operate against rails attached to the concrete or embedded members at the sides of the gate opening. J-Bulb seals are often used to enhance water tightness. Operating friction is reduced by the rolling action of the rollers.

Stop Logs manufactured from steel, stainless steel and aluminum are often used to control flows in open channels and reservoirs. A resilient seal along the bottom of each log seals on the sill plate or top of another log. Side seals are generally incorporated into the logs or guides to provide for low leakage requirements.

Guides are normally embedded in the concrete, but can be designed for wall mounting with anchor bolts.

Stop Logs are placed and removed by a log lifting device and overhead crane on larger sizes. The lifting device can be operated from the deck of the structure. Manual lifting rods are often used for small logs in shallow channels.

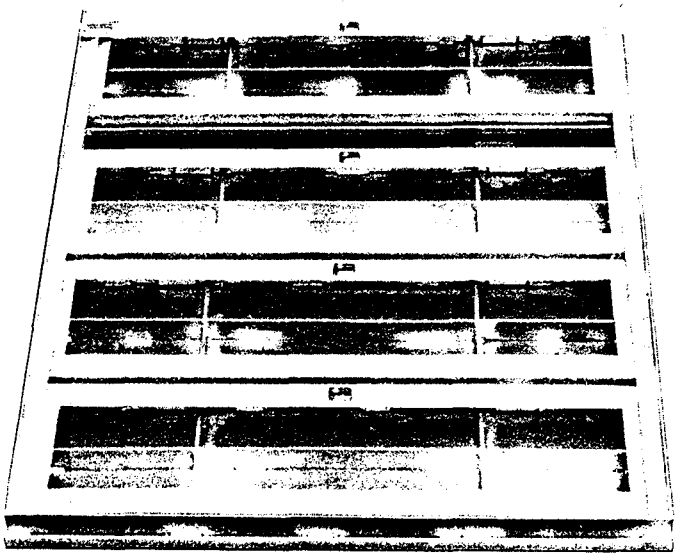

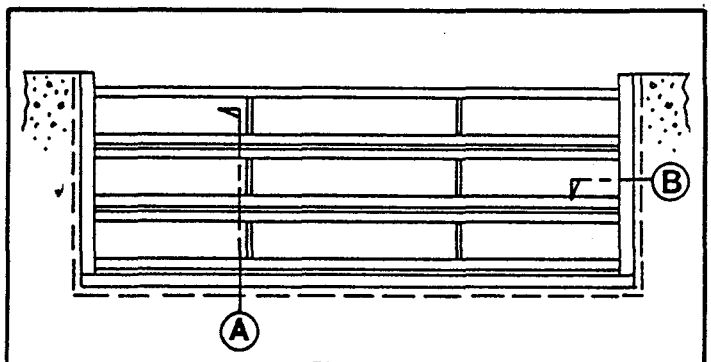


ELEVATION

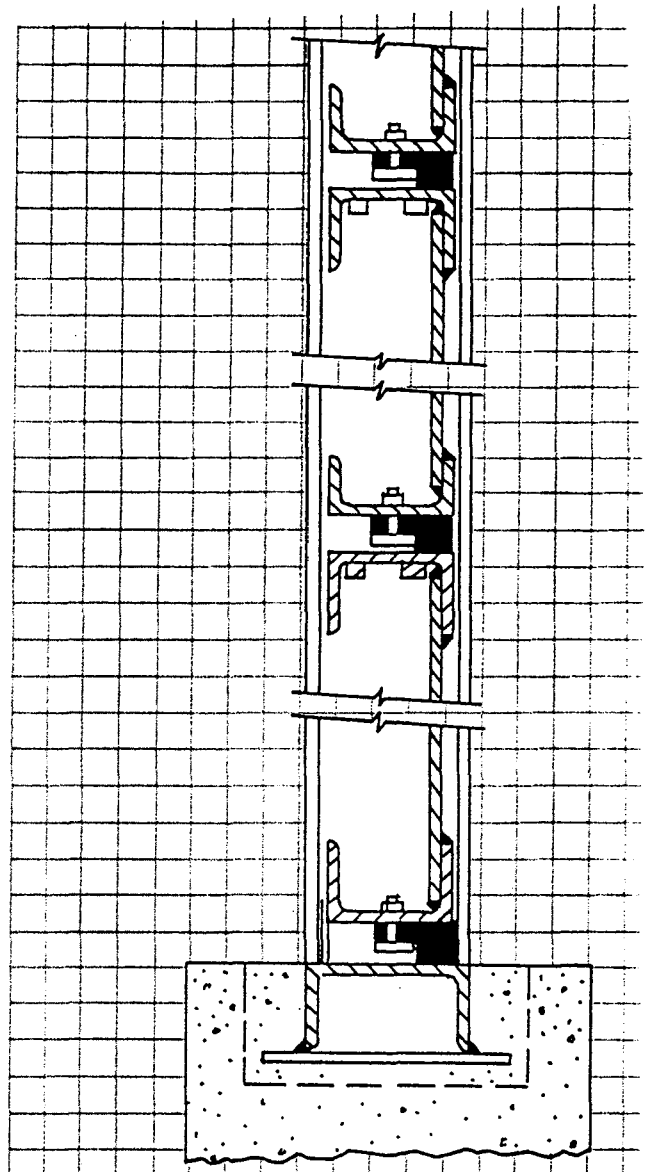

SECTION A
VIEW SHOWING BOTTOM SEALS

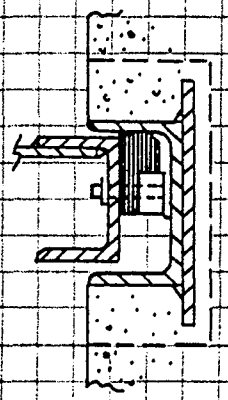

SECTION B
VIEW SHOWING END SEAL

**sla**
SIMONS, LI & ASSOCIATES, INC.

CLIENT: CITY PHX
PROJECT: 91ST AVE WWTP
DETAIL: OUTFALL CONCEPT

JOB NO.: AZ-CPH-02
DATE CHECKED:
CHECKED BY:

PAGE: 6
DATE: 8/5/94
COMPUTED BY: RAE

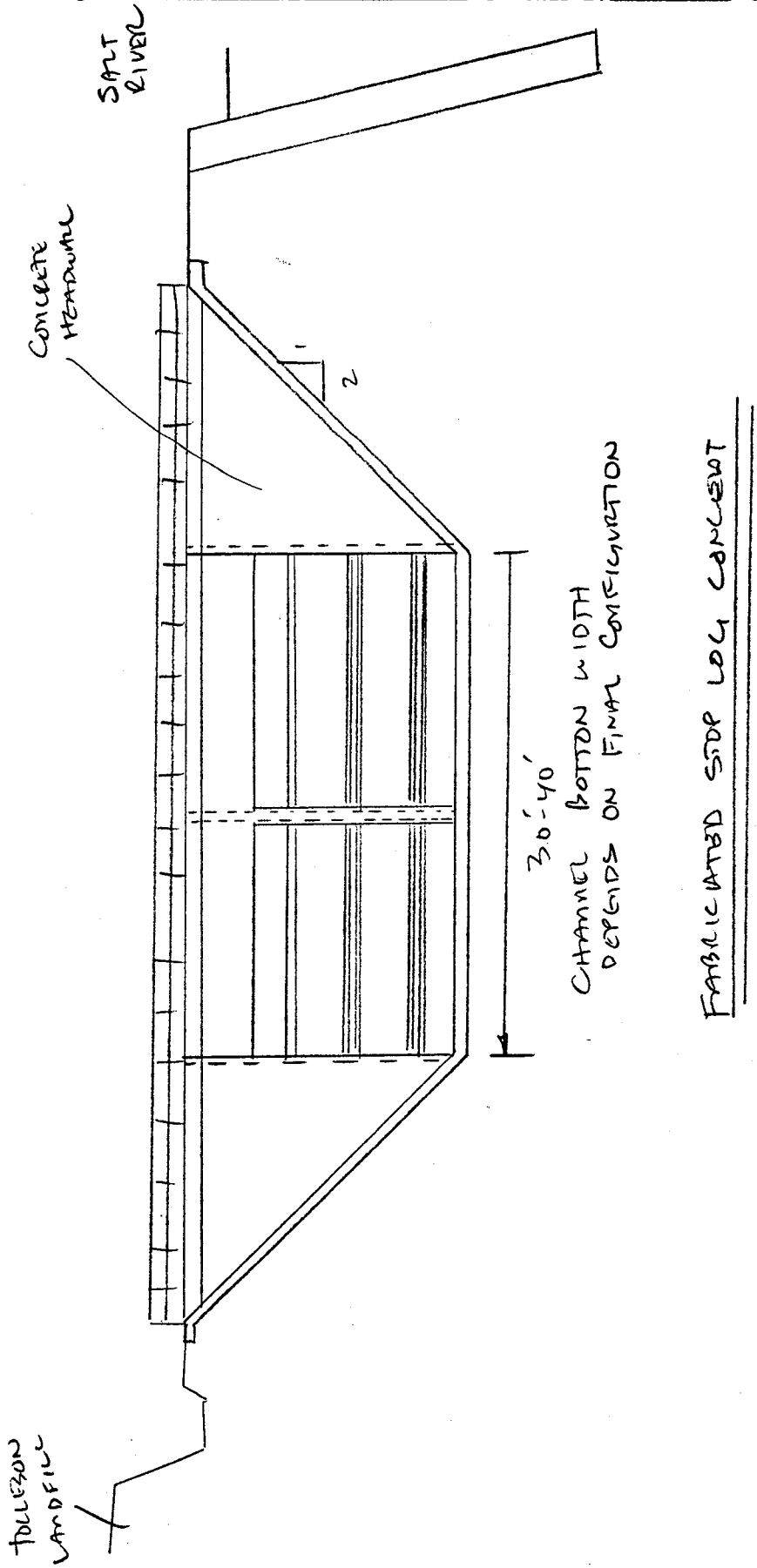


FABRICATED STOP LOG CONCEPT

**GOBLE SAMPSON ASSOCIATES**
1930 So. Alma School Road, Suite D102
Mesa, Arizona 85210
602-831-1722. FAX 602-838-9206

## FAX TRANSMISSION COVER LETTER

DATE: 7/27/94

NO. PAGES (INC. COVER) 3

TO: Simons Li & Assoc.

FAX NO: 491-1396

ATTENTION: Bob Eichinger

REFERENCE: Phx. 91st Ave Outfall - Waterman Flap Gates.

FROM: Phil Northrop -

FAX NO: 602-838-9206

If you are not receiving properly, or do not receive all pages, please contact our office as soon as possible.

Bob, based on 465CFS Flow Waterman is recommending the following Qty and Size of either Square or Round Drainage (Flap) Gates.

| Model | Size Square | Budget $ | Model | Size Round | Budget $ |
|---|---|---|---|---|---|
| F-20 | 72" | 9136.00 | F-55 | 72" | 10,059.00 |
| F-20 | 60" | 7458.00 | F25 | 60" | 7380.00 |
| F-20 | 54" | 6305.00 | F25 | 54" | 6208.00 |
| F-20 | 48" | 4557.00 | F25 | 48" | 4572.00 |

You will need (2) 72", (3) 60", (4) 54" and (5) 48" to handle this Flow. Headloss Curves and revised Question-

CAST IRON • AUTOMATIC

# Drainage Gate

The Waterman Model F-20 Cast Iron Automatic Drainage Gate has a cast iron frame and cover (flap) with machined finished seating surfaces. A minimum 2½° seating angle and double pivoted links assure positive seating.

Hinge brackets, which can easily be field adjusted, allow the gate to be set for a very sensitive opening under low unseating pressure. Out-flow at practically full conduit capacity can be obtained.

Standard features include bronze hinge bushing, stainless steel hinge pins, studs and nuts with brass retainer washers and stainless steel spring pins. Links on all gates are flame cut from steel plate, then galvanized.

A lifting eye is cast as a part of the cover for hand operation.

Optional features available include bronze or stainless steel seats, monel or brass hinge pins, studs and nuts; graphite impregnated bronze bushings and lubrication fittings—or any combination thereof.

Standard shopcoat paint is an asphaltic base dipping enamel. All special coatings are available and include Vinyl, Epoxy and Coal Tar Paints or total galvanizing per ASTM A 123.

Anchor bolts are not included and should be ordered separately. Anchor bolts of galvanized steel, stainless steel, brass or monel are available as well as galvanized steel machine bolts and tap-in expansion anchors.

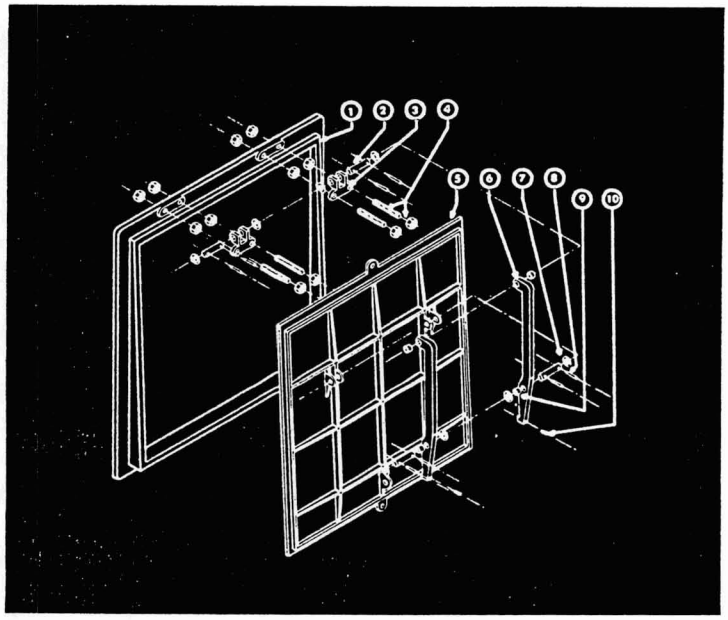


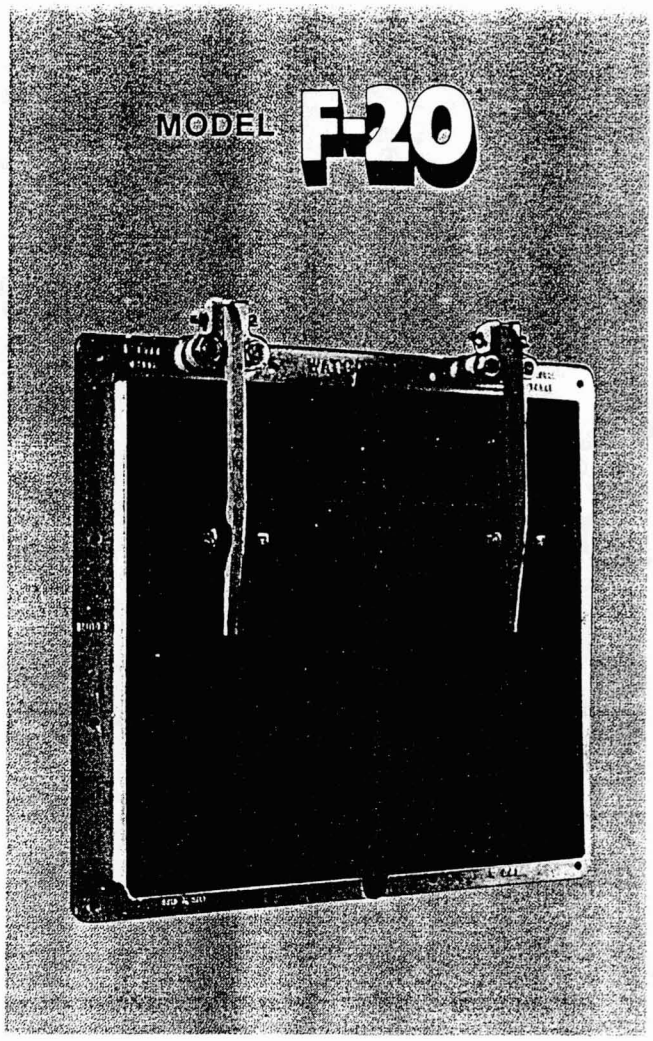


FLAT BACK F-20f
SPIGOT BACK F-20sb

1. Frame (Flat or Spigot Back)
2. Hinge Pins
3. Adjustable Hinge Bracket
4. Studs and Stud Nuts
5. Cover Flap
6. Link
7. Washer
8. Retaining Spring Pin
9. Bushing
10. Set Screw

- **20 Foot Seating Head**
- **Square and Rectangular Opening**
- **Flat back or Spigot Back**
- **Adjustable Linkage**
- **Cast Iron or Bronze Seats**
- **Galvanized Steel Links**
- **Bronze Hinge Bushings**
- **Stainless Steel Studs, Nuts and Pins**
- **Minimum 2½° Seat**

**Optional:**

- **Monel Studs, Nuts and Pins**
- **Coal Tar, Epoxy, Vinyl and other Special Coatings including Total Galvanizing**

BULLETIN 110 (1182) — PRINTED IN USA

**Waterman** INDUSTRIES, INC.

EXETER, CA • LUBBOCK, TX • GARDEN CITY, KS • BOISE, ID
MEMPHIS, TN • GRAND ISLAND, NB • INDIANAPOLIS, IN

**RED TOP** WATER CONTROL GATES, VALVES and EQUIPMENT

CAST IRON • AUTOMATIC

# Drainage Gate

The Waterman Model F-25 Drainage Gate features a high strength, fully adjustable linkage, providing for sensitive adjustment of the flap cover after installation.

The design of this gate prevents jamming and assures proper seating through the use of built-in safety stops and a 2½° to 5° seating angle.

Flat back and Spigot back models are available.

A choice of seat facings is available and includes machined or ground iron, bronze or neoprene cover gasket which is available with either iron or bronze mating frame seats.

The use of the Waterman neoprene cover seal provides a long life tight seal, which can be easily renewed. The heavy seal also provides a moderate cushioning of shock loads where some slamming may occur.

This model is not, however, recommended for pump discharges where violent slamming can occur.

| No. | Name | Qty. | No. | Name | Qty. |
|---|---|---|---|---|---|
| 1 | FRAME | 1 | 7 | HINGE PIN | 4 |
| 2 | COVER | 1 | 8 | HINGE BUSHING | 4 |
| 3 | PIVOT LUG | 2 | 9 | WASHER | 8 |
| 4 | HINGE LINK | 2 | 10 | SPRING PIN | 8 |
| 5 | HINGE STUD | 4 | 11 | SET SCREW | 2 |
| 6 | HINGE NUT | 12 | 12 | JAM NUT | 2 |

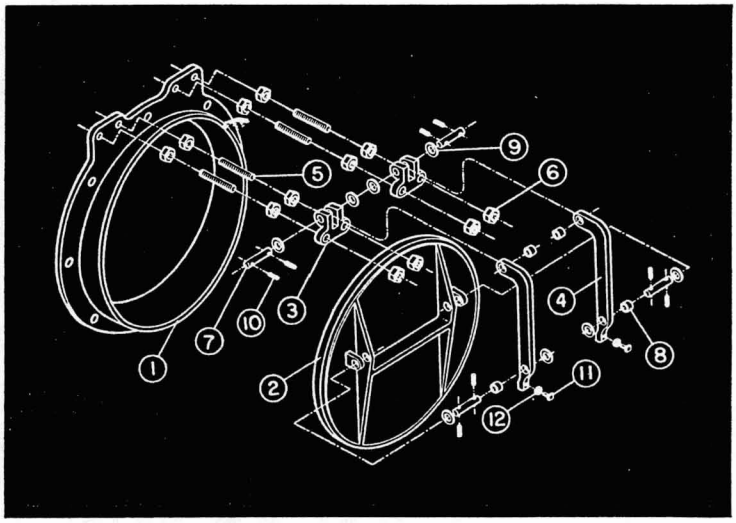


**To order parts, give quantity, valve size and name of parts as shown above. [If bronze or neoprene seat, specify].**

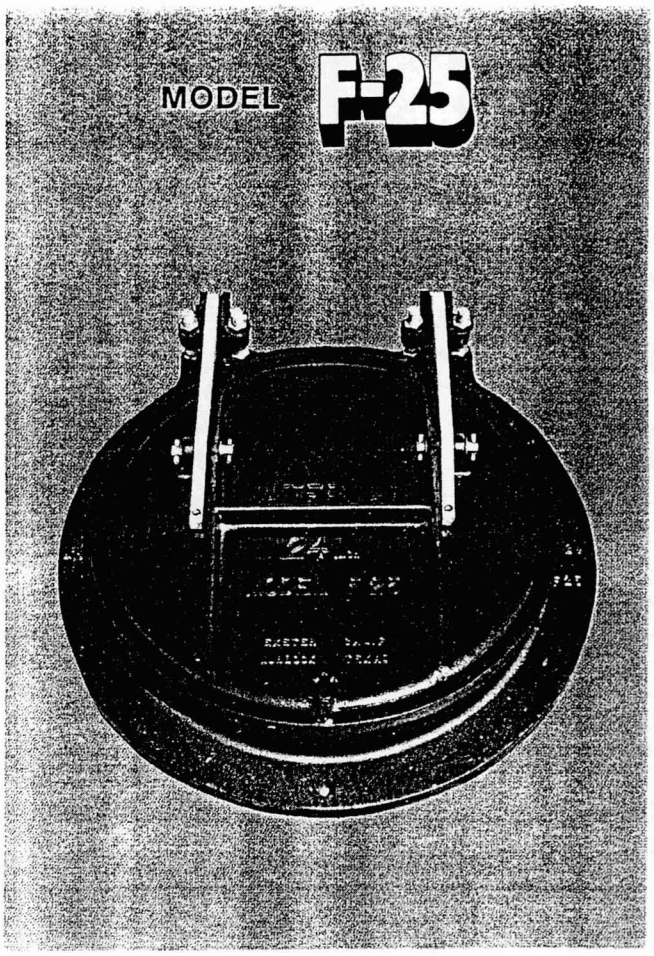


**FULLY ADJUSTABLE LINKAGE**
**25 FOOT SEATING HEAD**

Model F-25f - Flat Back
Model F-25sb - Spigot Back

- **Cast Iron Frame and Cover**
- **Highly Strength Malleable Iron or Steel Links**
- **Stainless Steel Studs, Bolts and Pins, Standard, Brass or Monel, Optional**
- **Bronze Bushings, Standard. Permanently Lubricated Bronze or Teflon, Optional**
- **Minimum 2½° Seating Angle. 24" Diameter and over.**
- **Minimum 5° Seating Angle. 21" Diameter and smaller.**
- **Optional 25 lb. and 125 lb. ANSI Flange Drilling**

**CAST IRON SEAT - Standard. Used for moderate conditions where costs must be minimized.**

**BRASS SEAT - Optional. Used for corrosive conditions where long service is important.**

**NEOPRENE SEAT (with iron or bronze) - Optional. Replaceable in flap cover. Cushions "slam" on closing.**

**See price list for weights and sizes available.**


**waterman** INDUSTRIES, INC.

EXETER, CA • LUBBOCK, TX • GARDEN CITY, KS • BOISE, ID
MEMPHIS, TN • GRAND ISLAND, NB • INDIANAPOLIS, IN

**RED TOP** WATER CONTROL GATES, VALVES and EQUIPMENT

MODEL **F-55**

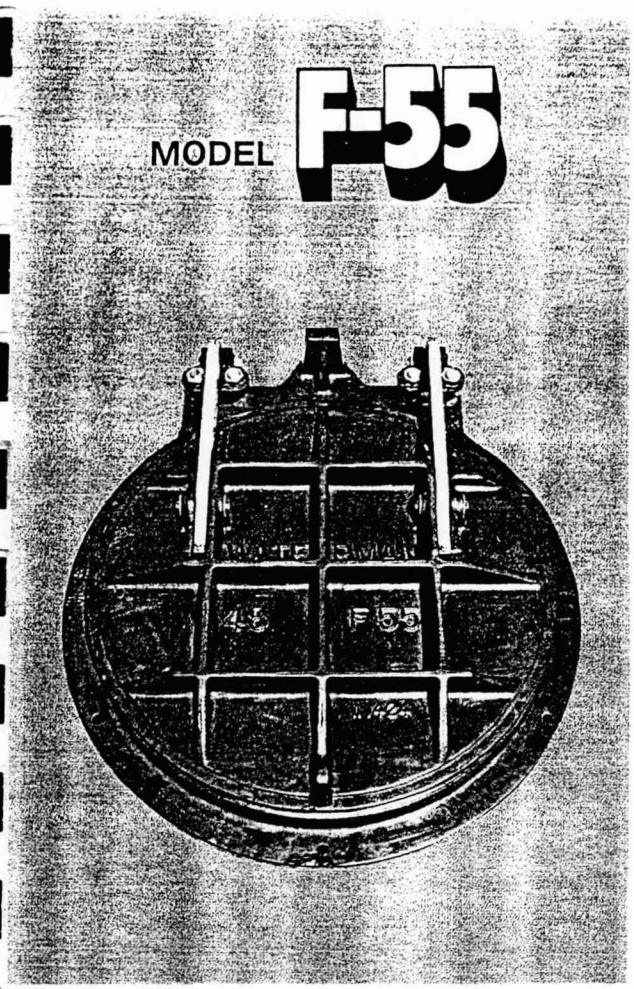

*Heavy Duty*

**CAST IRON • AUTOMATIC**

# Drainage Gate

| No. | Name | Qty | No. | Name | Qty |
|---|---|---|---|---|---|
| 1 | FRAME | 1 | 10 | SPRING PIN | 8 |
| 2 | COVER | 1 | 11 | SET SCREW | 2 |
| 3 | PIVOT LUG | 2 | 12 | JAM NUT | 2 |
| 4 | HINGE LINK | 2 | 13 | BUMPER BOLT | 2 |
| 5 | HINGE STUD | 4 | 14 | NUT | 2 |
| 6 | HINGE NUT | 12 | 15 | BUMPER | 1 |
| 7 | HINGE PIN | 4 | 16 | SPRING ELEMENT | 3 |
| 8 | HINGE BUSHING | 4 | 17 | BOLT | 2 |
| 9 | WASHER | 8 | | | |

Model F-55 Gates are furnished with a flange back frame with 125 lb. ANSI standard drilling. Frame, cover (flap) and adjustable hinge blocks are cast iron. Standard hinge links are flame cut steel or ductile iron. Assembly bolts, hinge pins and keepers are type 304 stainless steel. Hinge bushings are bronze.

Gate features a minimum of 2½° seat incline to assure positive closing. Finished seating faces are machined to a flat plane within .002.

Optional dovetail bronze seat faces, stainless steel seat faces, and a dovetail neoprene seat in either the cover or frame are available. A leaf spring bumper with rubber cushion block can be furnished when the gate is used on pump discharge lines.

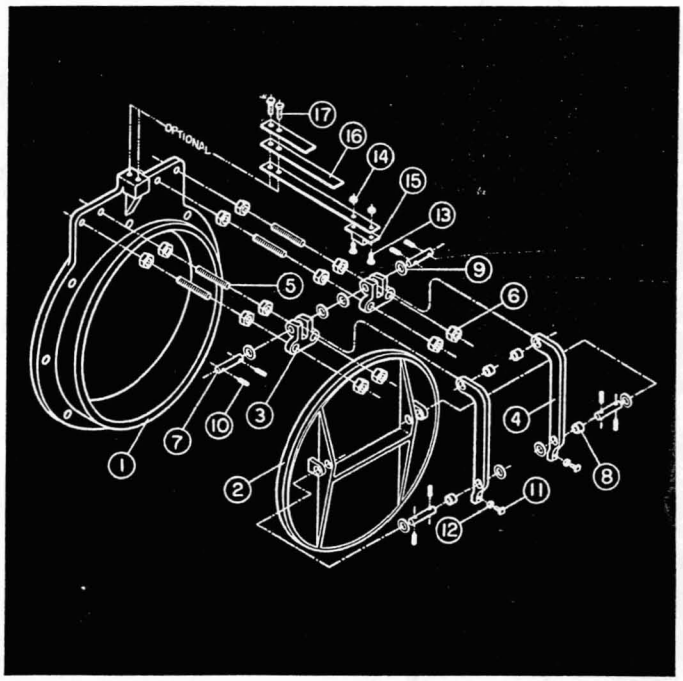


**Optional items include:**

- **Ni-Resist cast iron frame cover and hinge block**
- **Type 304 or 316 stainless steel links**
- **Manganese bronze hinge links**
- **Non-metallic hinge bushings**
- **Type 316 stainless steel assembly hardware**
- **Special paint coatings — epoxy, vinyl, etc.**

**Waterman** INDUSTRIES, INC.

EXETER, CA • LUBBOCK, TX • GARDEN CITY, KS • BOISE, ID
MEMPHIS, TN • GRAND ISLAND, NB • INDIANAPOLIS, IN

**RED TOP** WATER CONTROL GATES, VALVES and EQUIPMENT

**sla** SIMONS, LI & ASSOCIATES, INC.

CLIENT _____ JOB NO. AZ-CPH-03 PAGE _____
PROJECT _____ DATE CHECKED _____ DATE 8/18/94
DETAIL _____ CHECKED BY _____ COMPUTED BY JHL

HEADWALL EXTENSION ALTERNATIVE 1 OPTION 1

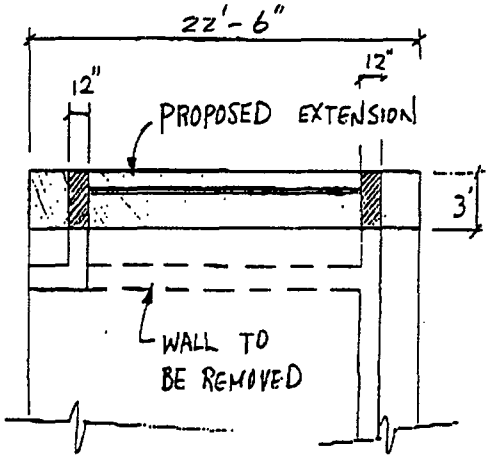


Wall height = 10'

(A) SLAB

$V_{CONC.} = (22.5)(3)(1.5) = 102 \text{ CF} = 3.80 \text{ CY}$

$W_{REINF} = (200 \text{ lb/CY})(3.80) = 760 \text{ lbs}$

(B) WALL

$V_{CONC.} = (3)(10)(1) = 30 \text{ CF} = 1.11 \text{ CY}$

$W_{REINF} = (200 \text{ lb/CY})(1.11) = 222 \text{ lbs}$

(C) REMOVAL OF EXISTING WALL

$V_{CONC.} = (16.5)(1)(10) = 165 \text{ CF} = 6.11 \text{ CY}$

---

\$ (CONCRETE) = (\$ 250/CY)(3.8 + 1.11) = 1230

\$ (REBAR) = (\$ 0.5/lb)(760 + 222) = 490

\$ (REMOVAL OF EXISTING) = (\$ 300/CY)(6.11) = 1830

\$ (SLUICE GATE) = ?

---

TOTAL = 3550 + (\$ SLUICE GATE)

**sla**
SIMONS, LI & ASSOCIATES, INC.

CLIENT _____ JOB NO. AZ-CPH-03 PAGE _____
PROJECT _____ DATE CHECKED _____ DATE 8/18/94
DETAIL _____ CHECKED BY _____ COMPUTED BY JHL

## HEADWALL EXTENSION ALTERNATIVE 2 OPTION 1

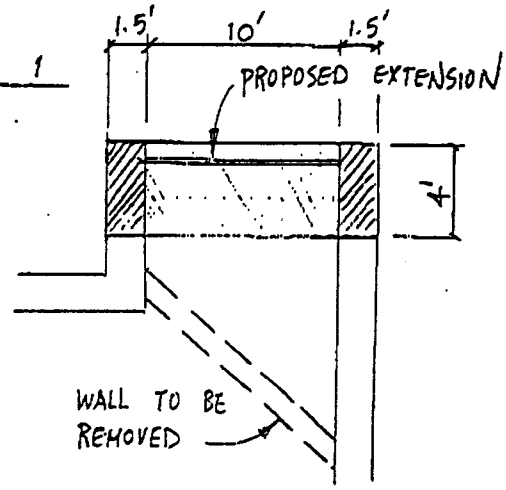


Wall Height = 10'

(A) SLAB

$V_{CONC.} = (13)(1.5)(4) = 78\ CF = 2.89\ CY$

$W_{REINF} = (200\ lb/CY)(2.89) = 578\ lbs$

(B) WALL

$V_{CONC.} = (1.5)(10)(4) = 60\ CF = 2.22\ CY$

$W_{REINF} = (200\ lb/CY)(2.22) = 444\ lbs$

(C) REMOVAL OF EXISTING WALL

$V_{CONC.} = (16)(0.67)(10) = 107\ CF = 3.97\ CY$

---

\$ (CONCRETE) = (\$ 250/CY)(2.89 + 2.22) = 1280

\$ (REBAR) = (\$ 0.5/lb)(578 + 444) = 510

\$ (REMOVAL OF EXISTING) = (\$ 300/C.Y)(3.97) = 1190.

\$ (SLUICE GATE) = ?

---

TOTAL = 2980 + (\$ SLUICE GATE)

**sla**
SIMONS, LI & ASSOCIATES, INC.

CLIENT _____ JOB NO. AZ-CPH-03 PAGE _____
PROJECT _____ DATE CHECKED _____ DATE 8/18/94
DETAIL _____ CHECKED BY _____ COMPUTED BY JHL

## COST ESTIMATE FOR HEADWALL STRUCTURE

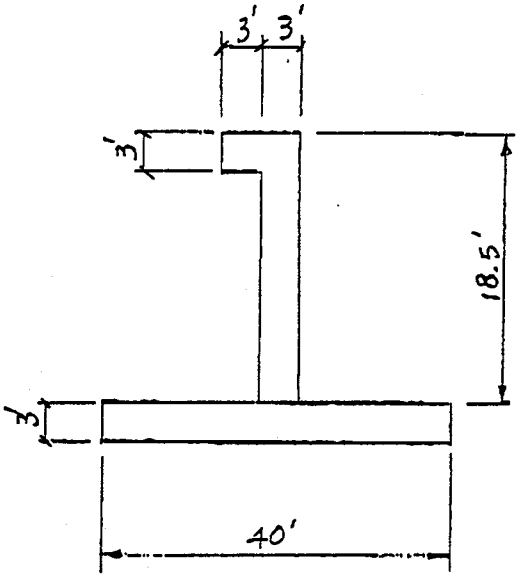


(A) FOUNDATION

$V_{CONC.} = 120 \times 40 \times 3 = 14400$ CF $= 534$ C.Y.

$W_{REIF.} = (220\ lb/CY) \times 534 = 117480$ lbs

(B) WALL

$V_{CONC.} = 120 \times 18.5 \times 3 + 80 \times 3 \times 3 = 7380$ CF

$= 274$ C.Y.

$W_{REIF.} = (220\ lb/CY) \times 274 = 60280$ lbs

(C) 3- 60" × 60" SLUICE GATE

(D) SAFETY RAIL L = 240 L.F.

---

\$ (CONCRETE) = (\$ 250/CY)(534 + 274) = 202000

\$ (REBAR) = (\$ 0.5/lb)(117480 + 60280) = 88880

\$ (SLUICE GATE) = ?

\$ (SAFETY RAIL) = (\$ 20/LF)(240) = 4800

---

TOTAL = 295680 + (\$ SLUICE GATE)

# M&W PUMP CORPORATION

TYPICAL APPLICATION FOR

## PORTABLE DIESEL DRIVE UNIT

WITH 45 DEGREE HYDRAFLO WATER PUMP

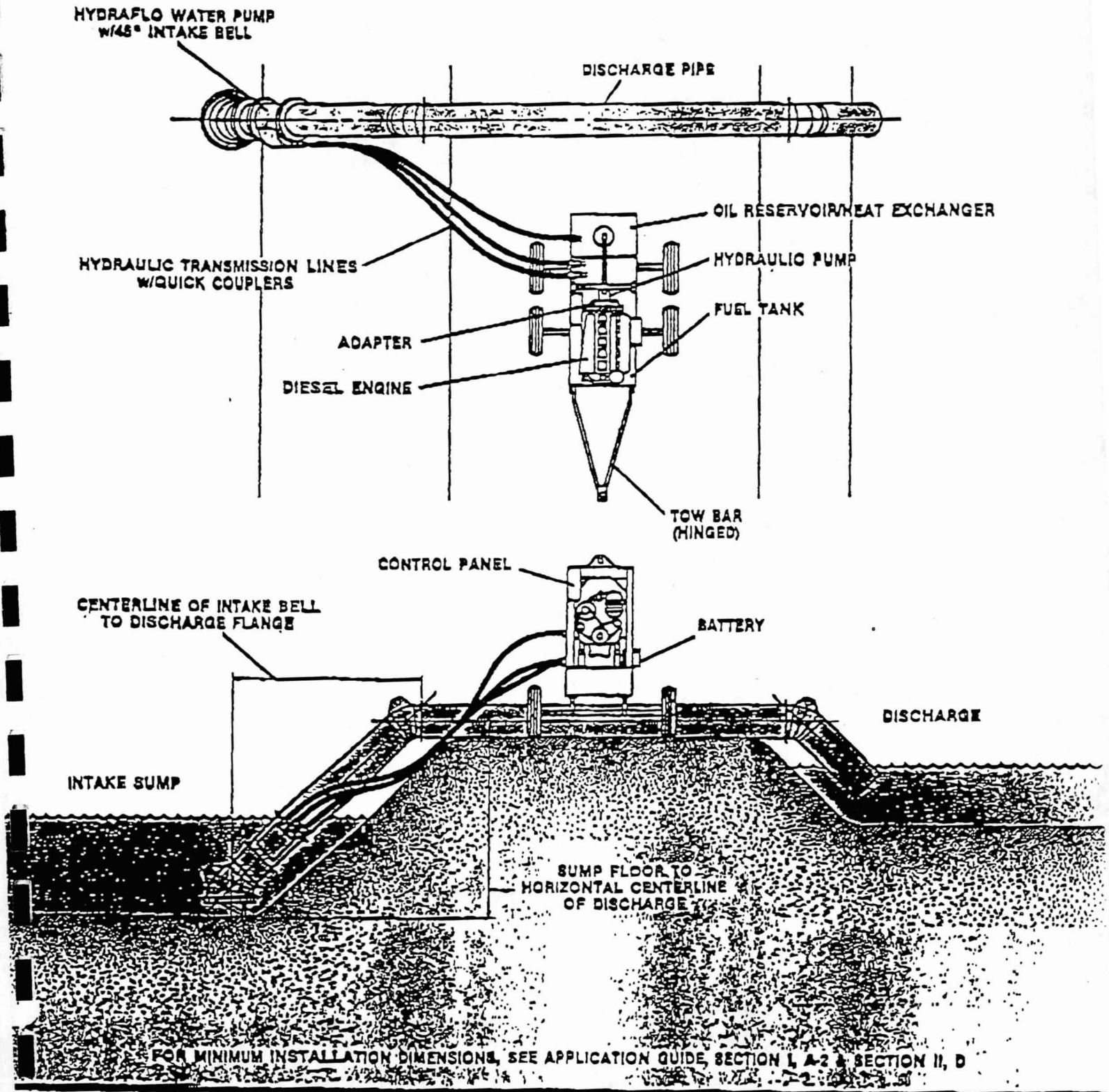


FOR MINIMUM INSTALLATION DIMENSIONS, SEE APPLICATION GUIDE, SECTION I, A-2 & SECTION II, D

N.W. 2nd Street Deerfield Beach, Florida 33441 U.S.A. Phone: (305) 426-1500 Telex: 51-8272

NOT USE FOR CONSTRUCTION UNLESS CERTIFIED BY FACTORY
All rights reserved. M&W PUMP CORPORATION 1984

# M&W PUMP CORPORATION

[redacted]

## STANDARD EQUIPMENT

1. OIL RESERVOIR / HEAT EXCHANGER
2. HYDRAULIC OIL LEVEL SWITCH GAUGE (NOT SHOWN)
3. RETURN FILTER
4. QUICK COUPLERS
5. RELIEF VALVE
6. SUCTION STRAINER (BELOW)
7. HYDRAULIC PUMP
8. DIESEL ENGINE
9. TOW BAR
10. LIFTING EYES
11. WHEEL / SPRING / AXLE ASSEMBLY
12. BATTERY
13. CONTROL PANEL WITH ENGINE CONTROLS
    - A. SUCTION STRAINER VACUUM GAUGE
    - B. HYDRAULIC SYSTEM PRESSURE GAUGE
    - C. OIL TEMPERATURE GAUGE
    - D. FAILURE RESET
    - E. SYSTEM LOADING VALVE
14. DAY TANK

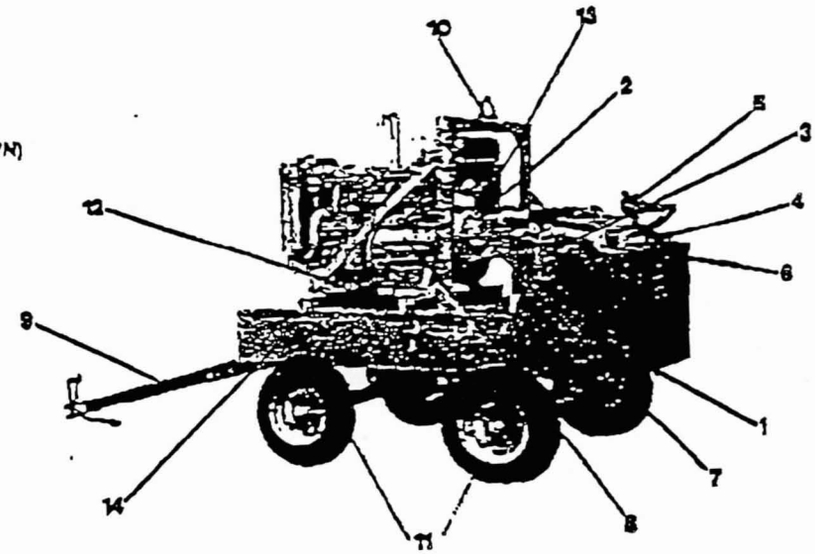


## OPTIONS AVAILABLE

1. TAIL LIGHT KITS
2. HYDRAULIC BRAKE SYSTEM (LARGER UNITS ONLY)
3. TOW BAR HITCH TO MATCH TOWING VEHICLE
4. STEERABLE FRONT END (LARGER MULTIPLE WHEEL UNITS ONLY)
5. ELECTRIC MOTOR PRIME MOVER IN LIEU OF DIESEL ENGINE
6. ELECTRIC MOTOR PRIME MOVER IN ADDITION TO DIESEL ENGINE UTILIZING DIESEL AS STANDBY

## GENERAL INFORMATION

| MODEL NUMBER | WATER PUMP | HYDRAULIC OIL RESERVOIR | DAY TANK | HOSE CONNECTION | | | DIESEL ENGINE | NUMBER OF AXLES | NUMBER OF WHEELS | TOW BAR ARRANGEMENT |
|---|---|---|---|---|---|---|---|---|---|---|
| | | | | SUPPLY | RETURN | CASE DRAIN | | | | |
| 400P | HM304 | 28 | 46 | .75 | 1 | - | 10-25 | 1 | 2 | AXLE WITH ADJ. STAND |
| 500P | HT004 | 28 | 46 | .75 | 1 | .75 | 5-25 | 1 | 2 | AXLE WITH ADJ. STAND |
| 600P | HT006 | 28 | 46 | 1.0 | 1.25 | .75 | 10-30 | 1 | 2 | AXLE WITH ADJ. STAND |
| 800P | HAC308 | 28 | 46 | .75 | 1 | .75 | 10-20 | 1 | 2 | AXLE WITH ADJ. STAND |
| 1200P | HAC312 | 42 | 62 | .1 | 1.25 | .75 | 20-40 | 1 | 2 | AXLE WITH ADJ. STAND |
| 1300P | HH512 | 127 | 170 | 1.25 | 1.50 | .75 | 50-75 | 2 | 4 | WHEELS |
| 1600P | HAC316 | 77 | 77 | 1.25 | 1.50 | .75 | 30-60 | 2 | 4 | WHEELS |
| 1800P | HH618 | 179 | 179 | 1.50 | 1.50 | .75 | 125 | 3 | 6 | WHEELS |
| 2000P | HAC320 | 127 | 170 | 1.25 | 1.50 | .75 | 40-75 | 2 | 4 | WHEELS |
| 2400P | HAC324 | 179 | 179 | 1.50 | 1.50 | .75 | 60-125 | 3 | 6 | WHEELS |
| 2500P | HH524 | 294 | 133 | 1.50-2 | 2 | .75 | 200-280 | 3 | 6 | AXLE WITH ADJ. STAND |
| 3000P | HAC330 | 294 | 133 | 1.50-2 | 2 | .75 | 125-250 | 3 | 6 | AXLE WITH ADJ. STAND |
| 3600P | HAC336 | 294 | 133 | 1.50-2 | 2 | .75 | 150-250 | 3 | 6 | AXLE WITH ADJ. STAND |
| 4200P | HAC342 | 294 | 133 | 1.50-2 | 2 | .75 | 150-250 | 3 | 6 | AXLE WITH ADJ. STAND |

NOTES:
1. Last two digits in this number indicate pump discharge diameter.
2. Hose sizes may vary due to length requirements. Standard length is 30 feet (15.2m).
3. Actual horsepower for prime mover depends upon manufacturer's ratings and pumping requirements (GPM/TDH).
4. Standard tow bar is provided with a standard pin type hitch arrangement.

SEE REVERSE SIDE FOR PHYSICAL DATA

JUL 20 '94 09:41PM PLANNING&ENGINEERING602495543 P.3

JOHN CAROLLO ENGINEERS

91 ST

Title
W. O. No.
Date 2-12-93
By KM
Page of

M & W

HYDRAFLO PUMP RENTAL

200,000 GPM @ 20-FT HEAD

42-INCH UNIT

| | | |
|---|---|---|
| 90-FT. PIPE AT $25/FT/MONTH | = | 2250 |
| ELBOWS : 400/MONTH X 2 | = | 800 |
| PUMP UNIT PER MONTH | = | 30400 |
| | | $33,450 |

30-INCH UNIT

| | | |
|---|---|---|
| 100-FT PIPE @ $15/FT/MONTH | = | 1500 |
| ELBOWS : $260/MONTH X 2 | = | 520 |
| PUMP UNIT PER MONTH | = | 24730 |
| | | $26,750 |

24-INCH UNIT

| | | |
|---|---|---|
| 90-FT PIPE AT 12.80/FT/MONTH | = | 1150 |
| ELBOWS : $140/MONTH X 2 | = | 280 |
| PUMP UNIT PER MONTH | = | 8720 |
| | | $10,150 |

16-INCH UNIT

| | | |
|---|---|---|
| 90-FT PIPE X 12.80/FT/MONTH | = | 1150 |
| ELBOW : $140/MONTH X 2 | = | 280 |
| PUMP UNIT PER MONTH | = | 6980 |
| | | 8,410 |

TOTAL RENTAL - 30 DAYS

| | | | | |
|---|---|---|---|---|
| 100,000 GPM - 2 - 42-INCH UNITS AT | 33,450 | EA | = | 66,900 |
| 25,000 " - 1 - 30 " " " | 26,750 | EA | = | 26,750 |
| 48,000 " - 4 - 24 " " " | 10,150 | EA | = | 40,600 |
| 32,000 " - 4 - 16 " " " | 8,410 | EA | = | 33,640 |
| TOTAL | | | | 167,890 |

USE: $168,000 FOR 30 DAYS

FREIGHT NOT INCLUDED.

91 SC

M & W

Title
W. O. No.
Date 2-23-93
By KM
Page of

HYDRAELO PUMPS

FUEL CONSUMPTION

| | | | | | | |
|---|---|---|---|---|---|---|
| 42" UNITS | : | 12 GAL/HR | x 4 | = | 48 | GAL/HR |
| 30" " | : | 10 " | x 2 | = | 20 | |
| 24" " | : | 8 " | x 4 | = | 32 | |
| 16 " | : | 5 " | x 4 | = | 20 | |
| | | TOTAL : | | | 120 | GAL/HR |

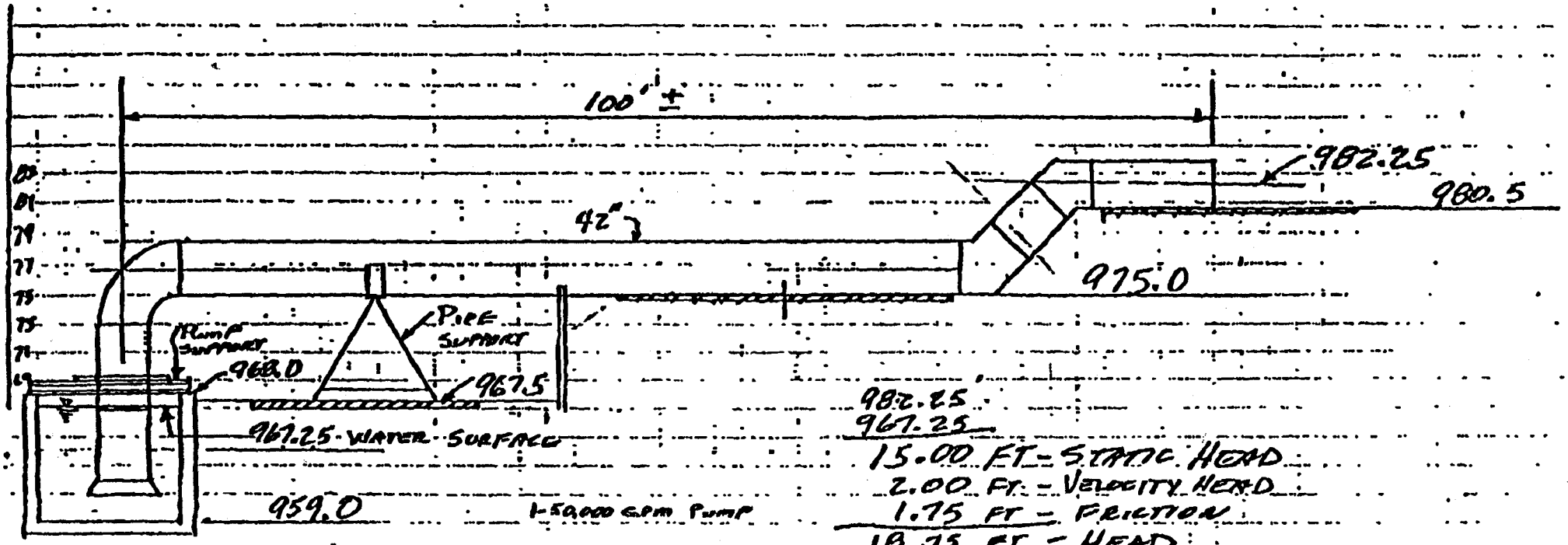


982.25
967.25
15.00 FT - STATIC HEAD
2.00 FT - VELOCITY HEAD
1.75 FT - FRICTION
18.75 FT - HEAD

PLANT III-A

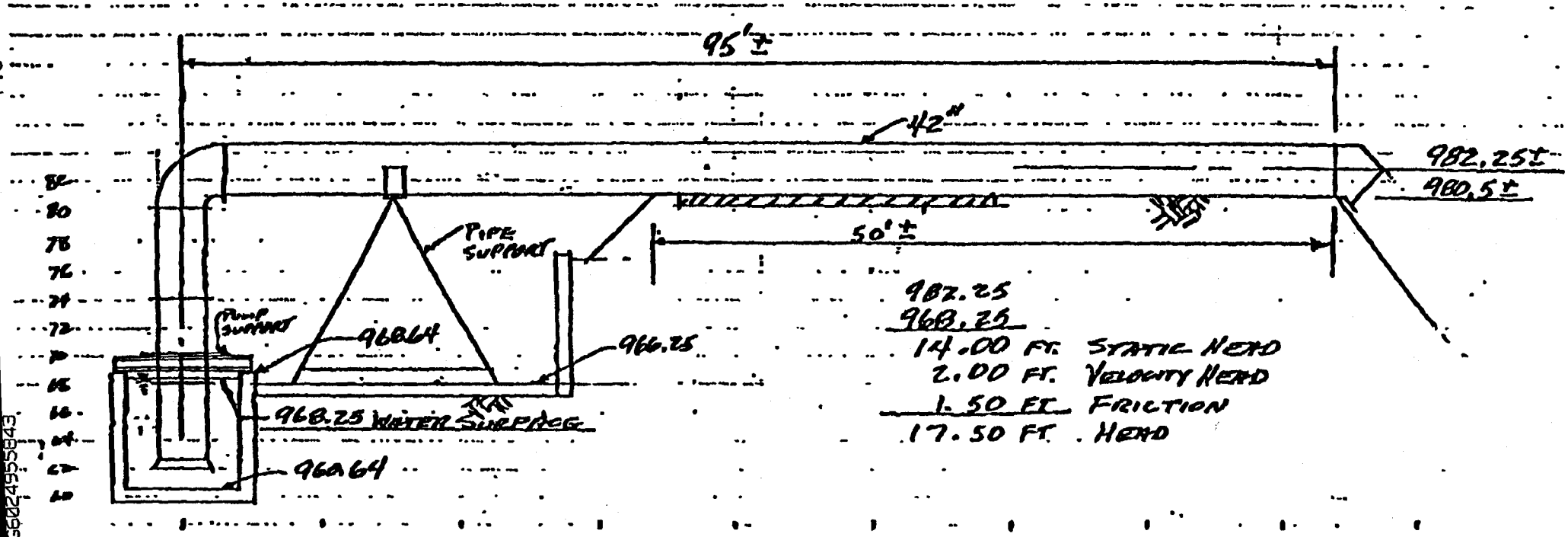
95'±
42"
982.25±
980.5±
50'±
PIPE SUPPORT
PUMP SUPPORT
968.64
966.25
968.25 WATER SURFACE
960.64
982.25
968.25
14.00 FT. STATIC HEAD
2.00 FT. VELOCITY HEAD
1.50 FT. FRICTION
17.50 FT. HEAD

PLANT II

AZ-CPH-03

08/04/94
MYC

**BASIN VOLUME CALCULATION**

| Basin Location | Contour | Area (FT^2) | H (FT) | Cumulative Volume (FT^3) | Time to Fill up (hour) @100 mgd | @200 mgd | @300 mgd | |
|---|---|---|---|---|---|---|---|---|
| WEST | 970 | 377200 | | | | | | |
| | | | 1 | 441124 | 0.79 | 0.40 | 0.26 | |
| | 971 | 508300 | | | | | | |
| | | | 1 | 1076511 | 1.93 | 0.97 | 0.64 | |
| | 972 | 771600 | | | | | | |
| | | | 1 | 2060013 | 3.70 | 1.85 | 1.23 | |
| | 973 | 1211900 | | | | | | |
| | | | 1 | 3374395 | 6.06 | 3.03 | 2.02 | with 1' freeboard |
| | 974 | 1419600 | | | | | | |
| | | | 1 | 4887609 | 8.78 | 4.39 | 2.93 | with no freeboard |
| | 975 | 1608800 | | | | | | |
| EAST(lower) | 973 | 30268 | | | | | | |
| | | | 1 | 3419929 | 6.14 | 3.07 | 2.05 | with 1' freeboard |
| | 974 | 62752 | | | | | | |
| | | | 1 | 5009617 | 9.00 | 4.50 | 3.00 | with no freeboard |
| | 975 | 91072 | | | | | | |

| Discharge (mgd) | Basin Volume @ Duration of (ft^3) 3-hour | 6-hour | 12-hour | 24-hour |
|---|---|---|---|---|
| 100 | 1670760 | 3341520 | 6683040 | 13366080 |
| 200 | 3341520 | 6683040 | 13366080 | 26732160 |
| 300 | 5012280 | 10024560 | 20049120 | 40098240 |

* 15,000 CY OR 9 AF OF FILL IS BEING PLACED FOR THE CHEMICAL HANDLING FACILITIES OF THE NITRIFICATION DE-NITRIFICATION PROJECT. THE ESTIMATED BASIN VOLUME IS 77-9 = 66 AF

NOTE: Above calculations are based on following assumptions;

1. Basins are impermeable, ie. no infiltration losses. This can be justified when high moisture content exists after a large amount of precipitation.
2. City preferred at least 1 ft of freeboard in all basins.
3. A berm of 975 elevation is assumed to be install along the south side of North Access Road in the west basin.
4. Time to fill up does not include travel time.
5. HEC-1 reservoir volume equation is used for basin volume calculation.

**sla**
SIMONS, li & ASSOCIATES, INC.

CLIENT: CITY PHX
PROJECT: 71ST AVE WWTP
DETAIL: JERSEY BARRIER COST
JOB NO.: A2-CPH-03.17
PAGE:
DATE CHECKED:
DATE: 8/9/94
CHECKED BY:
COMPUTED BY: RAB

QUOTE FROM McAtee Equip Co. 254-1984

1000 LF JERSEY BARRIER 7-DAY RENTAL

| | | |
|---|---|---|
| $0.04 /LF / DAY RENTAL | 1000(0.04)(7) | = $280.00 |
| $ 4.90 /LF FREIGHT (ONE TIME CHARGE) | | = $4,900.00 |
| $ 0.94 /LF SET-UP (CRANE + CREW) | | = 940.00 |
| $ 0.94 /LF REMOVAL (CRANE + CREW) | | = 940.00 |
| | TOTAL | $ 7,060 |
| | RENTAL USE | $ 7,100 |

PURCHASE PRICE

| | | |
|---|---|---|
| $ 10.00 /LF | 1000 (10) | $ 10,000.00 |
| $ 2.45 /LF FREIGHT (ONE-WAY) | | $ 2,450.00 |
| $ 0.94 /LF SET-UP | | $ 940.00 |
| | PURCHASE | $ 13,390 |
| | USE | $ 13,400 |

**GOBLE SAMPSON ASSOCIATES**
1930 So. Alma School Road, Suite D102
Mesa, Arizona 85210
602-831-1722. FAX 602-838-9206

## FAX TRANSMISSION COVER LETTER

DATE: 8/23/94

NO. PAGES (INC. COVER) 8

TO: Simons Li & Assoc.

FAX NO: 491-1396

ATTENTION: Bob Eichinger

REFERENCE: Flow through Gates

FROM: Phil Northrop.

FAX NO: 602-838-9206

If you are not receiving properly, or do not receive all pages, please contact our office as soon as possible.

Please See the attached Nomograph For The Flow through Gates.

A 10 x 10 (100 Square Foot) gate, even with only 1' of Head above the Centerline of the gate (6' of Water in Chamber) the gate will pass just over 500 CFS. With 4' of head over the Centerline (9' of Water in Chamber) it will pass just under 1200 CFS.

I don't think we have a problem with the 10 X 10 S-5000 Sluice Gate.

$$Q = C_d A \sqrt{2gH}$$

WHERE:

Q = Discharge, cubic feet per second
0.70 = C Coefficient of Discharge
A = Area of opening, square feet
H = Head in feet above center line of opening
g = Acceleration due to gravity 32.2 ft./second$^2$

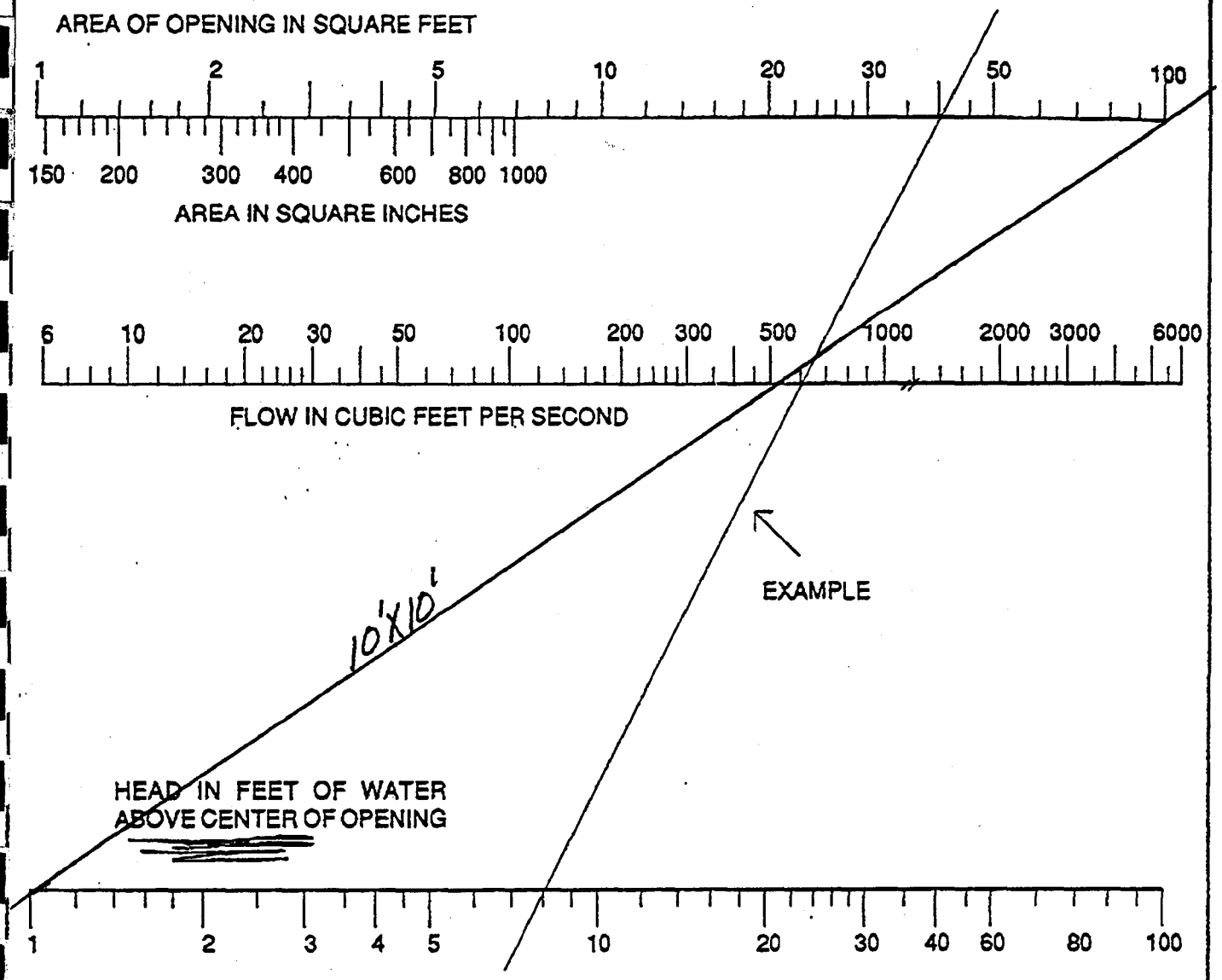


WHERE TWO FACTORS ARE KNOWN, A SOLUTION CAN BE FOUND FOR A THIRD FACTOR BY LINING UP THE TWO KNOWN FACTORS WITH A STRAIGHT EDGE. (SEE EXAMPLE)

# Key to Waterman Sluice Gate Terminology

| Prefix | Series | Suffix |
|---|---|---|
| Q = Flush Bottom Seal | 7000 | f = Standard Flangeback |
| S = Sluice Gate | 5000 | ff = Extended Flangeback |
| C = Circular Opening | 4000 | NRS = Non-Rising Stem |
| | | Y = Self-Contained Frame (yoke) |
| | | X = Special Modifications |
| | | I = Inverted (downward opening) |

120"x120" QS-5000-F-Y

**Example:** S-5000-f-NRS-Y
Sluice Gate with Standard Flange Back, Non-Rising Stem, Self-Contained Gate

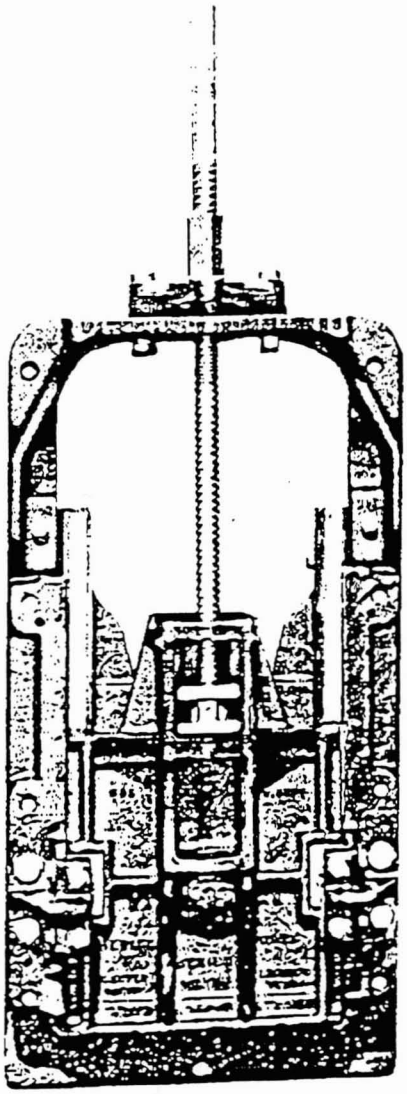

Waterman INDUSTRIES, INC.

# SELF-CONTAINED SERIES 5000 ~~AND 7000~~ SLUICE GATES

Self-contained gates are used when space above the gate installation, or the absence of structural supports, limits the installation of an independent operator.

Waterman self-contained gates are available in sizes up to 84" x 84" with standard cast yokes, and larger sizes with heavy duty fabricated yokes. Heavy duty cast iron yokes are attached to the machined pads on the gate guides. An extension of the guide provides clearance for the slide to move to the completely open position. A machined pad on the yoke provides a true surface for mounting the thrust collar or lift.

Self-contained gates may be furnished with rising stems, in which case the stem is secured to a standard slide thrust nut in the normal manner, and operated by a corrosion resistant stem and standard handwheel or crank type lift. The thrust of opening and closing is transmitted directly through the lift and yoke to the gate. Self-contained gates with non-rising stems utilize the non-rising stem (NRS) type cover arrangement and a stem having a thrust collar, contained in a housing on the yoke. Rotating the stem causes the stem block and slide to travel up and down. The operating thrust is transmitted directly to the yoke and gate frame.

Ball bearing lifts are not recommended for mounting on top of a self-contained yoke where the lift would be subject to submergence in the liquid being controlled. Special self-contained units with hydraulic cylinder operators or motorized lifts are available.

Note:

*Non-Rising stems are not recommended for use in fluids with heavy slurry concentrations as threaded portions of stem may be submerged. Premature wear may result.*

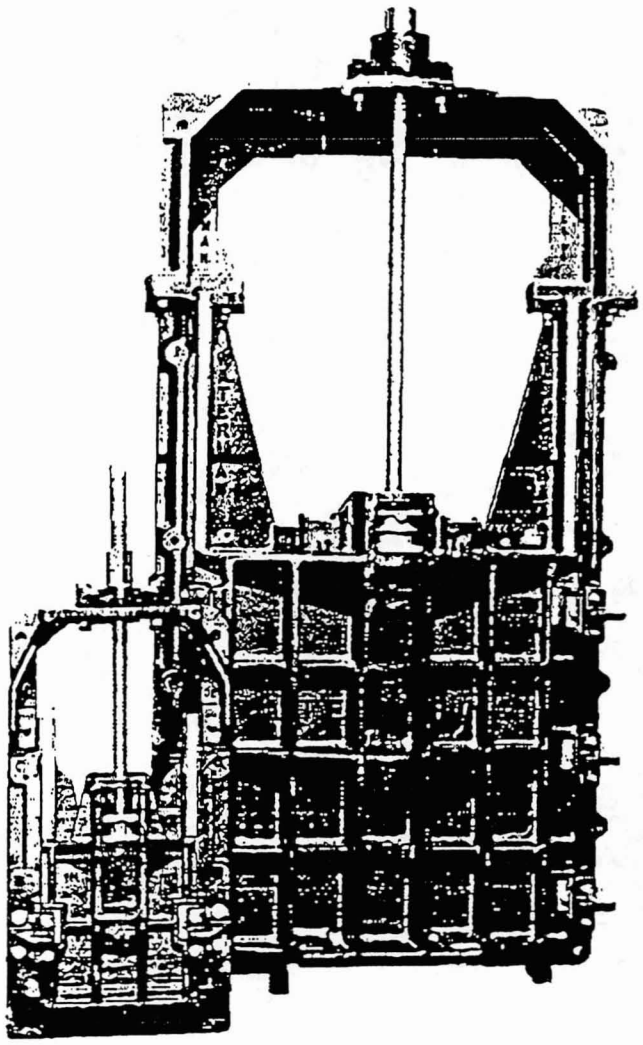

Waterman INDUSTRIES INC.

CAST IRON SLUICE GATE WITH

# "Q-SEAL" FLUSHBOTTOM SEAL

A "Q-Seal" flushbottom seal gate is used wherever a continuous smooth opening (without obstructions to impede solids) is desirable. Typical installations include wastewater settling tanks, aeration tanks, and sedimentation and flocculation basins.

## CONSTRUCTION FEATURES

Flushbottom closures feature a neoprene seal securely contained at the invert of the frame. The design of this seal provides a flat plane across the bottom of the gate without projections into the opening to obstruct flow. The seal is mounted on a cast iron bracket and held in place with a corrosion resistant retainer bar and fasteners. The seal is firmly supported on three sides, exposing only the flat top side, minimizing damage from floating objects, wet-dry conditions or sunlight. The seal is easily replaceable without disassembly of the gate.

When a flushbottom seal is used, a smooth rounded projection on the bottom of the slide replaces the normal metal seat and seat facing. The slide closes against the seal, compressing the neoprene between the slide and frame, making a watertight seal across the bottom of the opening. Bottom wedges are not used as they are not necessary for Waterman gates with a flushbottom closure.

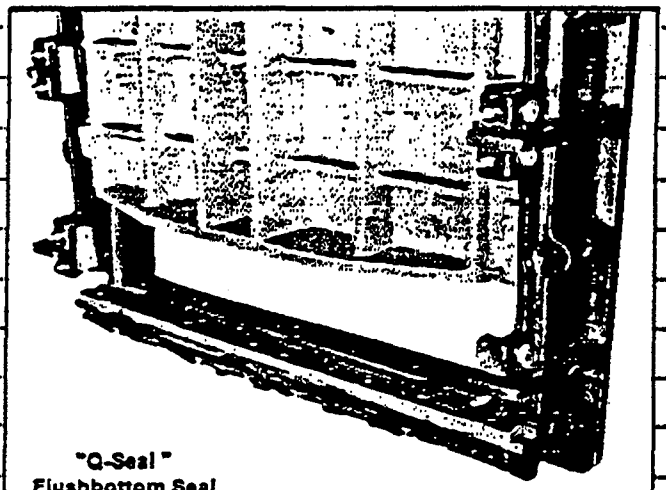

"Q-Seal"
Flushbottom Seal

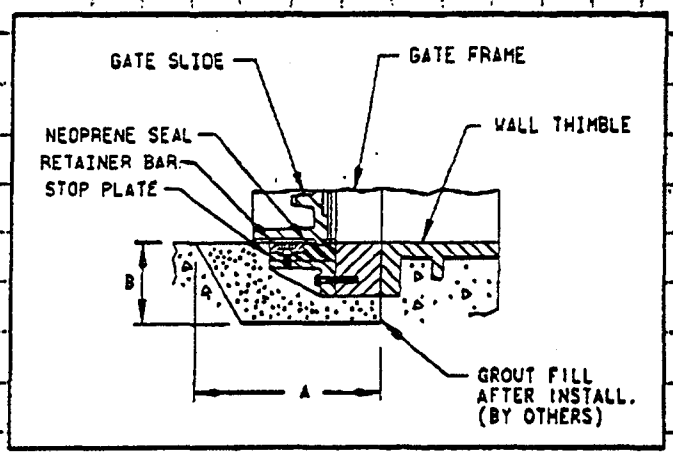


RECOMMENDED INSTALLATION CLEARANCES FOR FLUSHBOTTOM GATES

| Gate Diameter or Opening Height | Standard Flangeback Gate | | Extended Flangeback Gate | |
|---|---|---|---|---|
| | A | B | A | B |
| 6" thru 24" | 12 | 7 | 16 | 15 |
| 30" thru 42" | 15 | 7 | 20 | 15 |
| 48" thru 72" | 15 | 9 | 23 | 17 |
| 78" thru 120" | 18 | 10 | 26 | 18 |

Waterman INDUSTRIES, INC.

# TYPICAL SPECIFICATIONS
## SERIES 7000, 5000, 4000 HEAVY DUTY SLUICE GATES

The following specifications for Waterman Heavy Duty Sluice Gates are presented as an aid to the engineer and can be augmented with additional information to meet specific needs.

### Scope

This section covers all heavy duty sluice gates required on the project. Each gate shall be furnished and installed complete with wall thimble or anchor bolts, operating stem, gate lift operator and other appurtenances as specified or needed to make a complete and operable installation.

### General

Gates, stems, lifts and other appurtenances shall be the size, type, material and construction as shown on the drawings and specified herein. Gates shall meet the requirements of AWWA Specifications C-501 (latest revision) or as modified per these specifications. (They shall be Waterman Heavy Duty Sluice Gates or approved equal.) All component parts shall be of the type of material shown, and interchangeable where size and material are the same without grinding, chipping or special fitting in the field. The gates shall be the product of one manufacturer having five or more years of experience in the manufacture of similar gates for similar use. All mating and sliding parts shall be fully machined. All sluice gate parts, including lift, shall be designed for the heads shown with a minimum safety factor of five.

All materials used in the construction of the gates and appurtenances shall be the best suited for the application and shall be as follows:

### Frame and Guide Rails

The frame and guide rails shall be cast one-piece construction or may have guides dowelled and bolted to the frame. Frames shall be of the standard flangeback or extended flange type with round or rectangular opening as indicated on the plans and in the sluice gate schedule. A machined dovetail groove for the mounting of the bronze seat facings shall be provided on the front face of the frame around the full periphery of the opening. The frame shall be provided with cast-on pads which shall be machined, drilled, and tapped for the mounting of the wedge device. The back of the frame flange shall be machined to a plane and drilled to match the wall thimble, pipe flange, or anchor bolt pattern. Guide rails shall be of such length as to retain at least one-half of the vertical height of the slide when it is in the fully opened position. A groove running the full length of the guide rail shall be accurately machined to receive the slide tongue, with a nominal clearance of 1/16-inch.

### Cover or Slide

The cover shall be of one piece cast construction with vertical and horizontal ribs, a reinforced pocket to receive the thrust nut, pads to receive the wedges, and a reinforced periphery around the back side of the cover for machining of the dovetail grooves in which the seating faces shall be mounted. All wedge pads shall be machined, drilled and tapped to receive the wedge devices. The cover shall have fully machined tongues running the full length of each side to properly engage the guide rail grooves. A thrust nut shall be provided to attach the slide to the stem. The nut shall be threaded and, in the case of rising stems, provided with keys on two set screws locked into indents in the stem to prevent rotation of the stem. For non-rising stems, the stem shall turn freely in the thrust nut, to open and close the slides as the stem is rotated.

### Seating Faces

All seating faces for both covers and frames shall be malleable extruded corrosion resistant material (see materials section) of a shape that will fill and permanently lock in the full width dovetail grooves of the slide and the frame. No other means of attachment will be allowed. They shall be machined to a 63 micro-inch finish, or better.

### Wedges

All wedges and wedge blocks shall be solid corrosion resistant material and shall be of sufficient number to provide a practical degree of watertightness. All wedge bearing surfaces and contact faces shall be machined to give maximum contact and wedging action. Wedges shall be fully adjustable, but once set shall not rotate or move from the desired position. All fasteners and adjustment screws shall be corrosion resistant.

### Self-Contained Gates with Rising ~~& Non-Rising~~ Stems

When a self-contained gate is specified, a heavy yoke shall be mounted on the machined pads provided on the upper ends of the guide rails. The yoke shall have a machined bearing surface for the lift nut or pedestal mounting plate. On non-rising stems gates the nut pocket shall be cast on top of the slide so that the stem does not project into the waterway when the gate is fully opened. The thrust generated by gate operation shall be transferred to the yoke by the stem thrust collar or lift. When the operating floor is above the self-contained gate, a stem extension of cold-rolled or stainless steel shall be coupled to the operating stem with a bronze coupling or cast iron stem extension bracket. Operation shall be by a T-handle wrench or floor stand, shown on the plans and gate schedule. In a T-handle arrangement the stem extension shall be supported by at least one stem guide or a floor box with integral guide embedded in the operating floor.

### Flushbottom Sluice Gates

When a flushbottom closure is specified, a resilient seal shall be attached to the frame so that it is flush with the invert. It shall be supported by a cast iron bracket which shall be bolted to machined pads provided on the frame. The seal shall be held in place by a bronze or stainless steel bar which shall be bolted through the seal to the bracket with stainless steel fasteners. The cover (slide) shall be shortened and provided with a smooth rounded surface along the bottom to depress the seal. When unseating heads are to be acting on a flushbottom gate, top wedges shall be added, but bottom wedges will not be required. Sealing pressure shall be varied by adjusting side and top wedges.

## Wall Thimbles and Anchor Bolts

Wall thimbles shall be provided with all gates except those to be mounted on pipe flanges or those gates to be attached to concrete headwalls with anchor bolts, as shown on the plans. Each thimble shall be of one-piece cast iron construction and of the section and depth as specified in the plans and gate schedule. There shall be integrally cast water stop around the periphery of the thimble. The front flange of the thimble shall be machined, drilled and tapped to receive the sluice gate attaching studs. Bolt pattern shall match gate bolt pattern. After machining, the front flange shall be marked with vertical centerline and the word "top" for correct alignment. Large square and rectangular opening thimbles shall be provided with grout holes in the invert to permit entrapped air to escape. The holes shall be 1 1/2" in diameter, no more than two feet apart and shall be upstream and downstream of the water stop.

A mastic type gasket shall be provided between the sluice gate and the wall thimble. Anchor bolts shall be corrosion resistant.

Gates mounted directly upon the headwall shall be sealed between the gate back and wall with a non-shrink grout. See manufacturers detailed installation instruction.

## Stems and Stem Couplings

Operating stems shall be of a size to safely withstand, without buckling or permanent distortion, stresses induced by normal operating forces. Stems shall be fabricated from round bar stock of cold-finished steel, stainless steel or bronze, as shown on the plans or gate schedule and shall be provided with 29 degree modified or full acme threads. Stems composed of two or more sections shall be joined by bronze couplings threaded and keyed to stems, or couplings of the same material as the stems, pinned, bolted or welded and pinned to the stems. In section, couplings shall be stronger than the stems. Rising stems with manual lifts shall be provided with adjustable limit nuts or stop collars above and below the floor stand lift nut to prevent over travel of the gate in either direction.

## Stem Guides

Stem guides shall be cast with bronze bushings, and mounted on cast brackets. Guides shall be adjustable in two directions and shall be so constructed that when properly spaced they will hold the stem in alignment and still allow enough play to permit easy operation. Stem guide spacing shall be as recommended by the manufacturer, but in no case shall it exceed an l/r ratio of 200. Brackets shall be attached to the wall by anchor bolts and sufficient strength to prevent twisting or sagging under load.

## Manually Operated Lifts

Sluice gates shall be operated manually by handwheel or crank operated pedestal floor stands or bench stands as required. Each lift shall be provided with a threaded cast bronze lift nut to engage the threaded portion of the stem. The lift nut shall have a machined flange, fitted above and below with thrust ball or roller bearings. Handwheel lifts shall be without gear reduction while crank operated lifts shall have either a single or double reduction. Lifts having a reduction greater than 4:1 shall be two-speed. A maximum effort of 40 lbs. pull (25 lb. pull) on handwheel or crank, shall operate the gates under the specified operating head. The gears, when required, shall be steel with machine-cut teeth. Pinion gears shall be supported by bronze bushings or roller bearings. The lift mechanism shall be totally enclosed within a cast iron housing adequately provided with lubrication fittings. The pedestal shall be structural steel or cast iron. The crank shall be of cast iron with a revolving brass handle and shall be removable. The crank shall be a maximum of 15" long. All lifts for rising stems shall be provided with a counter type position indicator and a galvanized steel stem cover or a transparent plastic stem cover with mylar strip position indicator. Non-rising stem gates shall be provided with a counter type position indicator unless extension stems, valve boxes, or T-handle wrenches make an indicator impractical. Handwheels and crank input shafts shall be approximately 36" from the operating floor unless otherwise shown. The word "open" shall be cast onto the housing or handwheel indicating direction of rotation to open the gate.

Motor Operated

## Painting

All cast iron parts of the sluice gate (not bearing or sliding contact) and stem guides shall be painted in accordance with the section on painting found elsewhere in these specifications. That portion of the wall thimbles which will be in contact with concrete shall not be painted.

## Shop Testing

The completely assembled gate and hoist shall be separately shop-operated to insure proper assembly and operation. The gate shall be adjusted so that a .004" thick gauge will not be admitted at any point between frame and cover seating surfaces. All gates and equipment shall be inspected and approved by a qualified shop inspector prior to shipment.

## Storage and Installation

Sluice gates and equipment shall be stored and installed in accordance with the installation manual furnished by the gate manufacturer. After installation the completely assembled gate, stem, guides and lift shall be operated through one full cycle to demonstrate satisfactory operation. Such adjustments as necessary will be made until operation is approved by the engineer. When required by the engineer, the gate shall be subjected to leakage tests and pass the standard requirements for maximum leakage as specified in AWWA standards AWWA-C-501.

S-5000 & ~~SC-5000~~
S-5900 & ~~SC-5900~~

# SQUARE OR ROUND OPENING SLUICE GATES

| PARTS | |
|---|---|
| No. | Name |
| 1 | Frame |
| 2 | Cover |
| 3 | Thrust Nut |
| 4 | Cover Wedge Assembly |
| 5 | Guide Rails |
| 6 | Guide Rail Wedge Assembly |
| 7 | Top Wedge Assembly |
| 8 | Bottom Wedge Assembly |
| 9 | Fasteners |
| 10 | Seals |

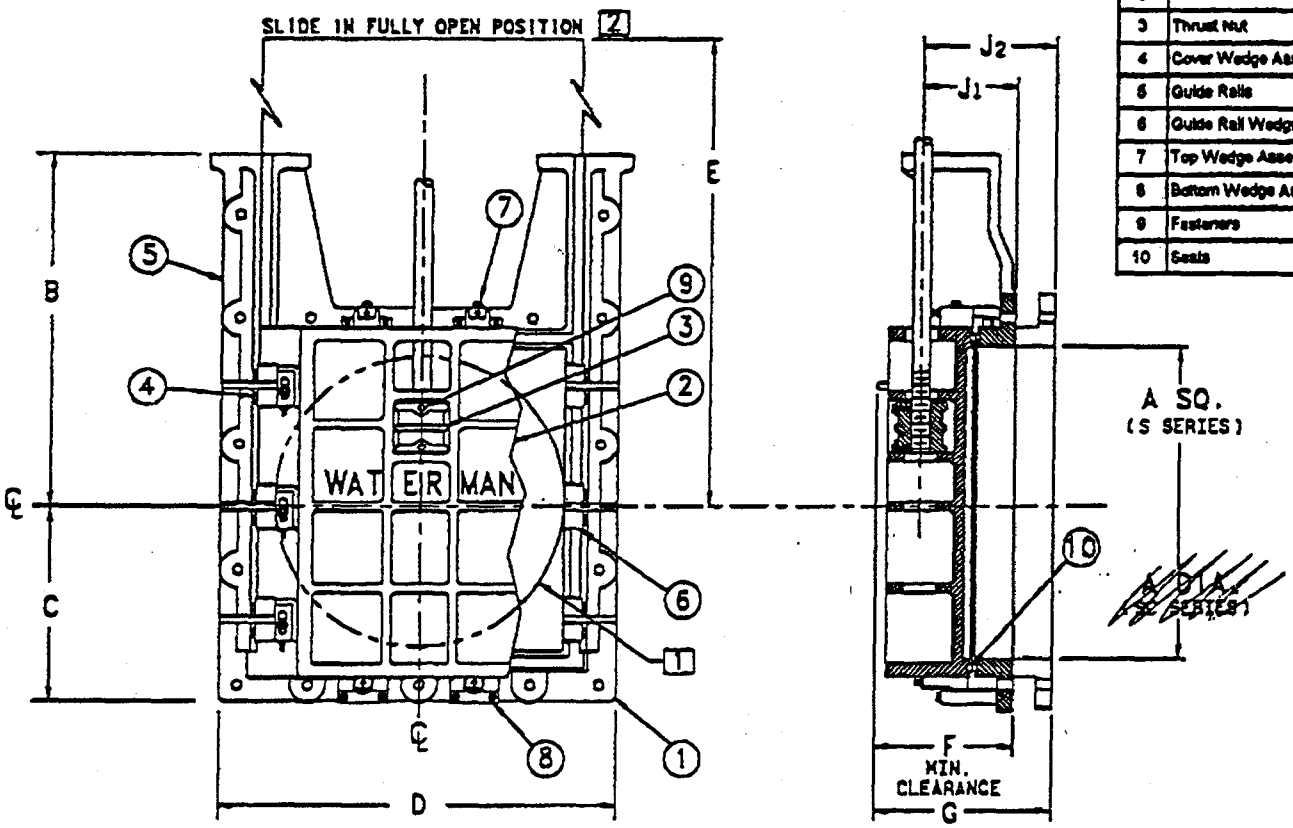


NOTES:

1. SC Series shown. S Series gate has square opening.
2. Top of NRS cover or top of wedges.

GATE SIZE**

| A | B | C | D | E | F | J1* | G | J2* |
|---|---|---|---|---|---|---|---|---|
| 6 | 9 3/4 | 6 1/2 | 14 1/2 | 15 | 9 | 4 1/2 | 13 | 7 1/2 |
| 8 | 10 1/8 | 8 | 17 | 19 | 9 | 4 1/2 | 13 | 7 1/2 |
| 10 | 12 | 9 1/2 | 19 | 22 | 9 | 5 | 13 | 8 1/2 |
| 12 | 14 1/4 | 10 3/8 | 20 3/4 | 25 | 9 1/2 | 5 | 13 1/2 | 8 1/2 |
| 14 | 16 | 11 1/2 | 23 | 28 | 9 1/2 | 5 | 13 1/2 | 8 1/2 |
| 15 | 17 | 11 1/2 | 23 | 29 1/2 | 9 1/2 | 5 | [illegible] 1/2 | 8 1/2 |
| 16 | 18 | 12 1/2 | 25 | 31 | 9 1/2 | 5 | [illegible] | 8 1/2 |
| 18 | 20 3/4 | 13 1/2 | 27 | 34 | 11 1/2 | 6 1/4 | [illegible] | 10 5/8 |
| 20 | 23 3/4 | 15 | 30 | 37 | 11 1/2 | 6 3/8 | 15 1/2 | 10 1/2 |
| 21 | 24 | 15 | 30 | 37 1/2 | 11 1/2 | 6 3/8 | 15 1/2 | 9 7/8 |
| 24 | 28 1/2 | 16 3/4 | 33 | 43 | 11 1/2 | 7 1/2 | 15 1/2 | 11 1/2 |
| 30 | 37 1/2 | 19 3/4 | 39 | 52 | 12 1/2 | 7 | 17 | 11 1/2 |
| 36 | 41 1/2 | 22 1/2 | 45 | 61 | 12 1/2 | 7 | 17 | 11 1/2 |
| 42 | 47 1/2 | 26 1/2 | 52 1/2 | 70 | 12 1/2 | 8 | 17 | 12 |
| 48 | 51 1/4 | 29 | 57 | 79 | 14 | 8 | 19 | 12 |

* Add for grout pad thickness if applicable.
** Square or Round

GATE SIZE**

| A | B | C | D | E | F | J1* | G | J2* |
|---|---|---|---|---|---|---|---|---|
| 54 | 59 1/4 | 33 | 66 | 88 | 15 1/2 | 8 1/2 | 20 | 12 1/2 |
| 60 | 64 | 36 | 72 | 97 | 15 1/2 | 8 3/4 | 20 | 12 1/2 |
| 66 | 68 | 39 | 78 | 107 | 15 1/2 | 9 | 20 | 12 1/2 |
| 72 | 74 | 42 | 84 | 116 | 15 1/2 | 9 | 20 | 13 1/4 |
| 78 | 84 | 45 | 90 | 125 | 15 1/2 | 10 | 20 | 13 3/4 |
| 84 | 87 | 47 1/2 | 95 3/4 | 133 | 18 1/2 | 9 1/2 | 23 | 13 3/4 |
| 90 | 94 | 53 | 106 | 142 | 18 1/2 | 11 | 23 | 15 1/4 |
| 96 | 100 | 56 | 112 | 151 | 18 1/2 | 11 | 23 | 15 1/4 |
| 108 | 110 | 62 | 124 | 170 | 20 | 11 | 25 | 15 1/2 |
| 120 | 124 | 68 | 136 | 188 | 20 | 11 | 25 | 15 1/2 |
| 132 | 134 | 74 | 148 | 206 | 20 | 12 1/2 | 25 | 16 3/4 |
| | | | | | | | | |
| | | | | | | | | |
| | | | | | | | | |

* Add for grout pad thickness if applicable.
** Square or Round
*** Size limitations may apply to models S-5200 and SC-5900

Waterman INDUSTRIES INC.

NOTE: FOR PRELIMINARY DESIGN PURPOSES ONLY
DO NOT USE FOR INSTALLATION
UNLESS PART OF CERTIFIED & APPROVED SUBMITTAL