3

FINAL REPORT
OUTER LOOP FREEWAY CROSSINGS
BETWEEN
SCOTTSDALE AND PIMA ROADS

Gilbertson Associates, Inc.
Consulting Civil Engineers & Land Surveyors
(602) 585-6464

FINAL REPORT
OUTER LOOP FREEWAY CROSSINGS
BETWEEN
SCOTTSDALE AND PIMA ROADS

Prepared for:

City of Scottsdale
7447 E. Indian School Road
Scottsdale, Arizona 85251

Registered Professional Engineer (Civil)
CERTIFICATE NO.
11697
THOMAS J.
KLIMEK
Date Signed 7-22-94
ARIZONA, U.S.A.

Prepared by:

GILBERTSON ASSOCIATES, INC.
Consulting Civil Engineers
and Land Surveyors
23733 North Scottsdale Road, Suite B
Scottsdale, Arizona 85255-3465

October 3, 1994

TABLE OF CONTENTS

	Page No.
INTRODUCTION	1
DISCUSSION	2
HYDRAULICS	5
SPECIAL CONSIDERATION	6
CONCLUSIONS	7
REFERENCES	8

LIST OF APPENDICES

Appendix A	HEC-1 File: OLP.24
Appendix B	HEC-1 File: CAP4.24I
Appendix C	Culverts - Hydraulic Performance

LIST OF FIGURES

Figure 1	Regional Drainage Plan
Figure 2	Detention Basin 38R2 Profile
Figure 3	Detention Basin 53R - Cell 1 Profile
Figure 4	Detention Basin 53R - Cell 2 Profile
Figure 5	Detention Basin 53R - Cell 1 & 2 Profile
Figure 6	Union Hills Channel
Figure 7	Hayden Road Channel

LIST OF TABLES

Table 1	Stage Discharge 38R2
Table 2	Stage Discharge 53R
Table 3	Flow Rates/Culvert Sizing

LIST OF PLATES

Plate 1	CAP Dike 3 Watershed
Plate 2	Outer Loop Freeway Crossings
Plate 3	Crossing Profiles for 53R & 38R2. (Sheet 2)
	Crossing Profiles for Scottsdale and Pima Roads. (Sheet 1)
Plate 4	Union Hills Channel Profile. (Sheet 1)
	Hayden Road Channel Profile. (Sheet 2)

INTRODUCTION

The purpose of this report is to size four major drainage crossings at the Outer Loop Freeway (OLF) between Scottsdale and Pima Roads. Figure 1 depicts the major components of the Regional Drainage Plan for the study area.

The concept sizing and layout is based on information provided by the following:

1. Upper Indian Bend Wash Regional Drainage and Flood Control Plan, by Water Resources Associates, Inc., July 6, 1992.

2. City of Scottsdale - Transportation Planning - June 1992 Regional Drainage Plan - CAP North Interim Outer Loop Off-Site Drainage System Plat #1 with September 14, 1992 Revision Table 1, July 23, 1992 Fully Developed Watershed 100-year, 6 and 24-Hour Storm Conditions.

3. Grayhawk Development Unit Drainage Plan, Case #21-UP-93, by Gilbertson Associates, Inc., March 21, 1994.

4. Scottsdale Perimeter Center Grading & Drainage Master Plan prepared by Collar, Williams & White Engineering, Inc., July 29, 1988.

5. Drainage Analysis of "State Trust Lands Plan View of Concept Drainage Plan", Plate No. 2 by Simons, Li & Associates, June 18, 1987.

6. Outer Loop Highway Preliminary Profile and Layout prepared by De Lew, Cather & Company, February, 1988.

7. Pima Freeway Preliminary General Plan prepared by Parson De Leuw, April, 1992.

It is important to note that this report is based on data provided by previous studies and background information without the benefit of actual field surveys. The ultimate Outer Loop Drainage design will be performed by the Arizona Department of Transportation (ADOT).

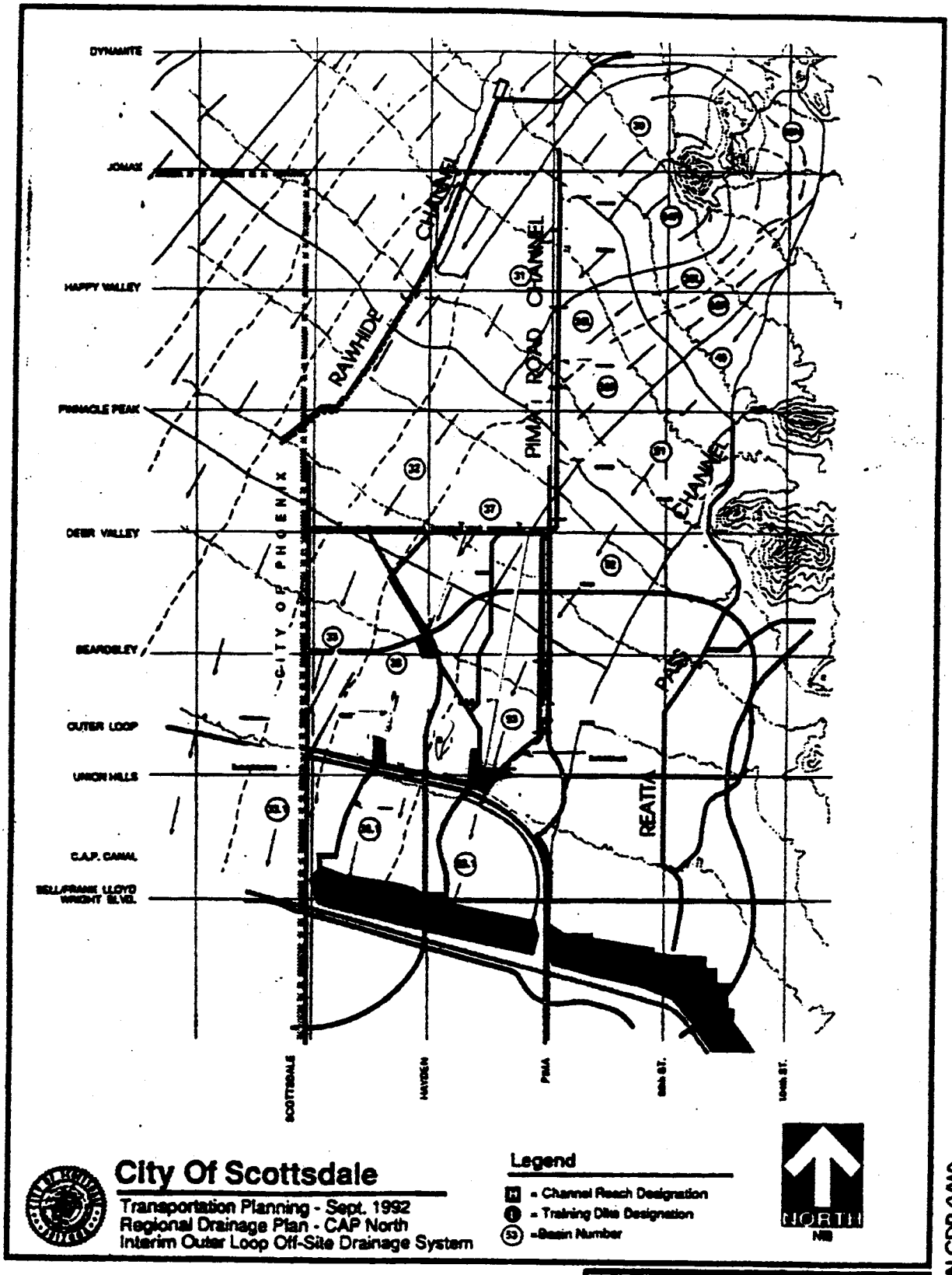

City Of Scottsdale

Transportation Planning - Sept. 1992
Regional Drainage Plan - CAP North
Interim Outer Loop Off-Site Drainage System

Legend

- = Channel Reach Designation
- = Training Dike Designation
- (53) = Basin Number

NTS

FIGURE 1
REGIONAL DRAINAGE PLAN
OUTER LOOP FREEWAY

230\19DRNPLN.CDR (VW)

GENERAL DISCUSSION

The Upper Indian Bend Wash (UIBW) (Ref. 10) hydrologic analysis was utilized as the basis for this report. Modifications to the UIBW model are briefly explained in the HEC-1 input deck. Such modeling modifications are focused on the most recent planning information of Core North, Inc.

All the hydrologic modeling assumptions are explained in detail in the UIBW report, except the above-mentioned modifications which are defined in the contents of this report or in the HEC-1 input deck.

In all instances the "highest" peak discharge design flow condition is used for the 100-year storm event. In all hydrologic conditions for the culverts and detention basins analyzed, the peak discharge for the 24-hour storm duration exceeded the 6-hour. Therefore, hereinafter a 100-year event refers to a 24-hour duration rainfall only.

Three regional detention basins are defined in this analysis, namely, 38R1, 38R2, and 53R. Originally the routing concept was to route the outflow from detention basin 38R1 to 38R2, but this concept has been changed to now reflect a stormwater routing from 38R1 to 53R. Consequently the ultimate detention basins contributing drainage areas has also changed as shown in Plate 1.

A conceptual minor collector channel design, along the proposed freeway, is being presented in this report as the drainage solution to convey stormwater from contributing areas CN5A, CN5B to Detention Basin 38R2, and CN5C to Detention Basin 53R (Cell 1)(see Plate 2). However, the ultimate alignment location and therefore design will be discussed between the City of Scottsdale and ADOT.

Scottsdale Road: The Scottsdale Road crossing will drain that portion of drainage area 33A located east of Scottsdale Road named 33ACM (see Plate 1). Storm water runoff from Area 33ACM will be conveyed under Scottsdale Road and discharged to the west side of the pavement and, therefore, into the City of Phoenix jurisdictional boundaries. The conceptual culvert alignment and profile are shown in Plate 3, Sheet 1. See Appendix 'A' HEC-1 model run and Appendix 'C' Culverts - Hydraulic Performance.

Regional Drainage Detention Basin 38R-2: A pre-determined 720 cfs flow rate, accepted by the City of Scottsdale (COS) and the State Land Department (SLD) was utilized for sizing the subject culvert crossing. The flow rates entering the proposed collector channels along the freeway were estimated from each individual contributing area, namely CN5A and CN5B. These collector channels will discharge into Detention Basin 38R2 under a free fall condition, in other words, no backwater effect can take place in this channels due to the contained stormwater in the subject detention basin (see figure 2).

Table 1 of this report shows the stage/discharge relationship for the outlet culvert of Detention Basin 38R2. The culvert runs from the north right-of-way line to the south right-of-way line. The proposed culvert discharges into a channel alignment which is similar in concept to the one presented for Core South by Simons, Li & Associates as part of their Drainage Analysis of *"State Trust Lands Plan View of Concept Drainage Plan"*, shown on Plate No. 2 dated 6-18-87. The overall alignment continues south through the State-owned land, south through the TPC Stadium Course and outlets to CAP Basin No. 3. The actual alignment and design capacity of this channel will be performed by others.

Regional Drainage Detention Basin 53R: By utilizing the pre-determined 2500 cfs flow rate established by the COS and agreed by the SLD, the culvert will serve to outlet the basin and runs from the north right-of-way line to the south right-of-way line. The conceptual layout and previous work performed by *Gilbertson Associates, Inc.* for Grayhawk Development, Inc. is used in the development of this culvert's operation.

Figure 3 and 4 show profiles for Detention Basin 53R, Cells 1 & 2 respectively. Figure 5 depicts Cells 1 & 2 and their 100-Year; 24-Hour water surface profiles. As it can be noted, there are no backwater effects taking place between the cells, nor between Cell 1 and the Pima Road Channel. Plate 2 shows the estimated flow rates entering Basin 53R. The culvert profile is shown on Plate 3. Table 2 shows the stage/discharge relationship for the outlet culvert 53R.

By utilizing the contours as shown on the *Scottsdale Perimeter Center Grading & Drainage Masterplan*, the Union Hills Channel and Hayden Road Channel have been conceptually designed (See Figures 6 and 7) up to Bell Road at which point a drop structure will need to be installed due to the vertical drop between the road and the golf course area to the south. The ultimate outlet is the CAP Basin No. 3.

DETENTION BASIN 38R2

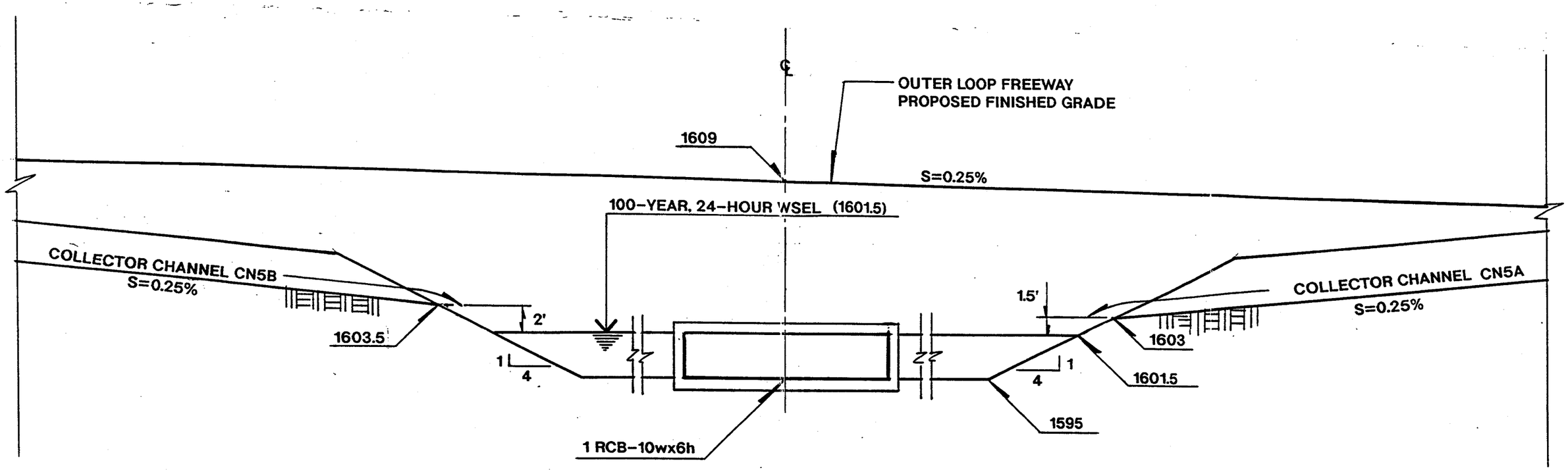

SECTION A-A

NTS

COLLECTOR CHANNEL CN5B

Bottom Width ft	Z-Left (H:V)	Z-Right (H:V)	VARIABLE Mannings 'n'	VARIABLE Channel Slope ft/ft	COMPUTED Channel Depth ft	COMPUTED Channel Discharge cfs	COMPUTED Velocity fps
25.00	2.00	2.00	0.014	0.0025	3.07	925.00	9.69
25.00	2.00	2.00	0.015	0.0025	3.19	925.00	9.24
25.00	2.00	2.00	0.016	0.0025	3.31	925.00	8.84

COLLECTOR CHANNEL CN5A

Bottom Width ft	Z-Left (H:V)	Z-Right (H:V)	VARIABLE Mannings 'n'	VARIABLE Channel Slope ft/ft	COMPUTED Channel Depth ft	COMPUTED Channel Discharge cfs	COMPUTED Velocity fps
10.00	2.00	2.00	0.014	0.0025	3.54	565.00	9.35
10.00	2.00	2.00	0.015	0.0025	3.66	565.00	8.90
10.00	2.00	2.00	0.016	0.0025	3.79	565.00	8.49

FIGURE 2
DETENTION BASIN 38R2
WATER SURFACE PROFILE
100-YEAR, 24-HOUR STORM EVENT

OUTER LOOP FREEWAY
CROSSINGS

DETENTION BASIN 53R – CELL 1

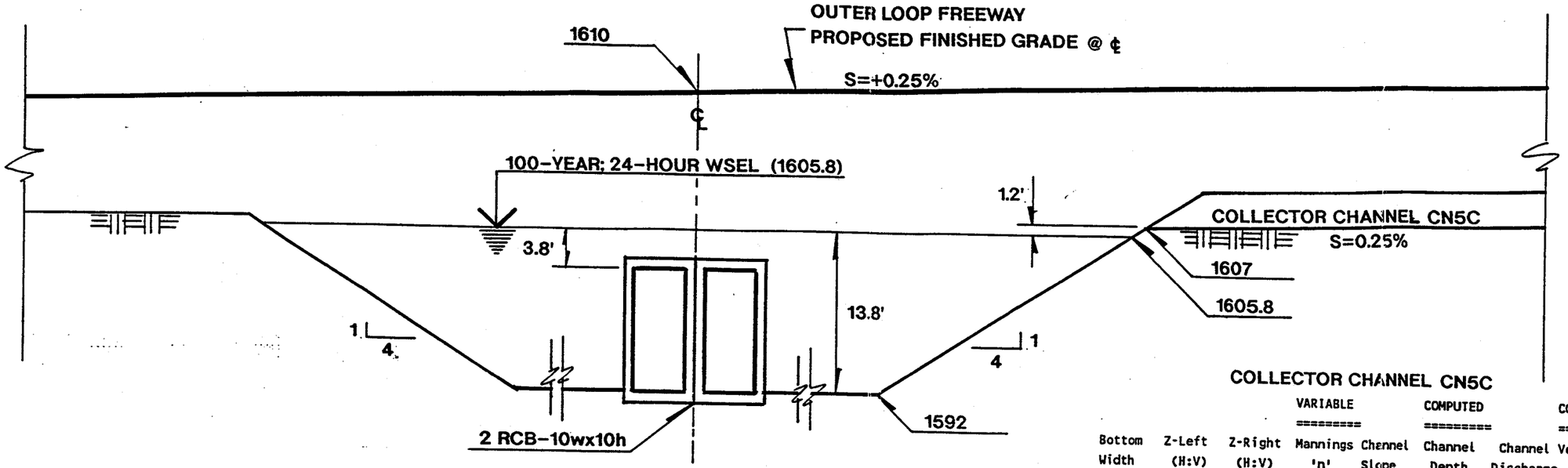

SECTION B–B

NTS

COLLECTOR CHANNEL CN5C

Bottom Width ft	Z-Left (H:V)	Z-Right (H:V)	VARIABLE Mannings 'n'	VARIABLE Channel Slope ft/ft	COMPUTED Channel Depth ft	COMPUTED Channel Discharge cfs	COMPUTED Velocity fps
10.00	2.00	2.00	0.014	0.0025	3.22	470.00	8.89
10.00	2.00	2.00	0.015	0.0025	3.33	470.00	8.46
10.00	2.00	2.00	0.016	0.0025	3.45	470.00	8.07

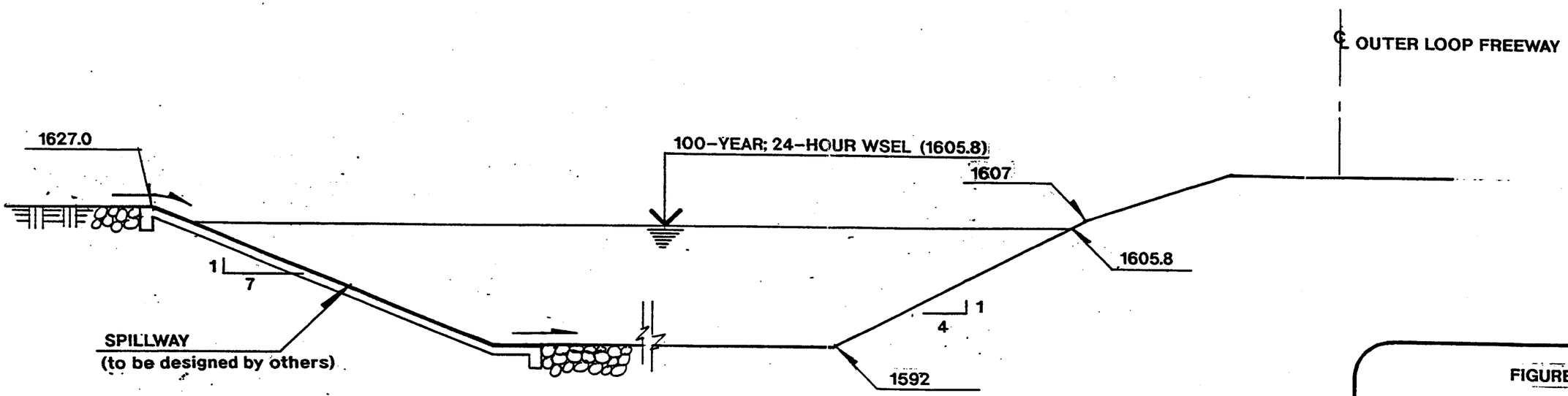

SECTION C–C

NTS

FIGURE 3

WATER SURFACE PROFILE
100-YEAR; 24-HOUR STORM EVENT

OUTER LOOP FREEWAY
CROSSINGS

DETENTION BASIN 53R – CELL 2

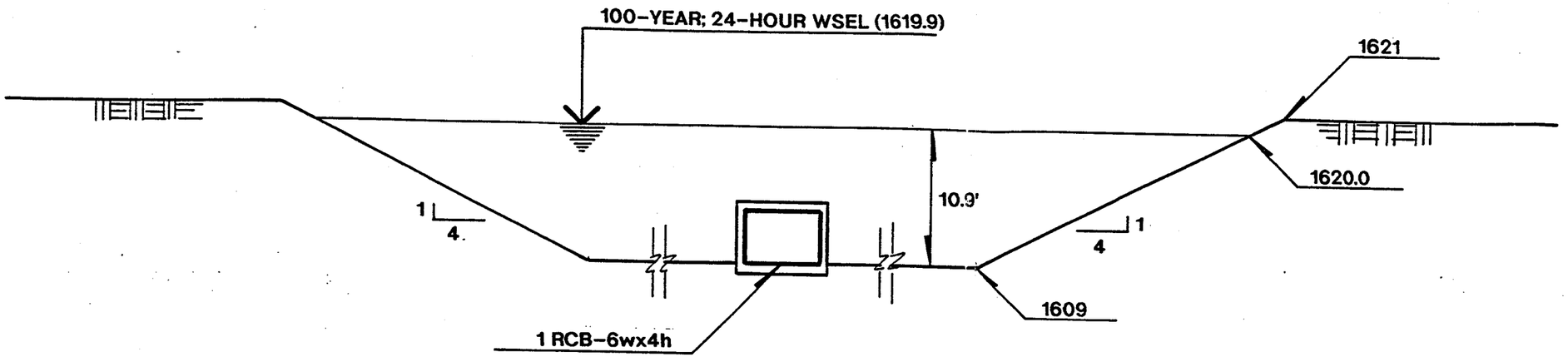

SECTION D-D

NTS

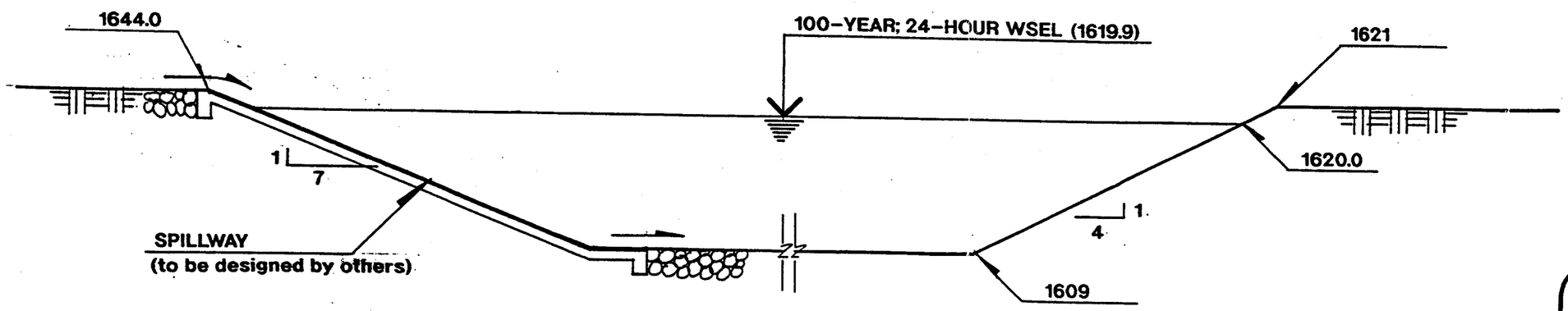

SECTION E-E

NTS

FIGURE 4

WATER SURFACE ELEVATION
100-YEAR; 24-HOUR STORM EVENT

OUTER LOOP FREEWAY
CROSSINGS

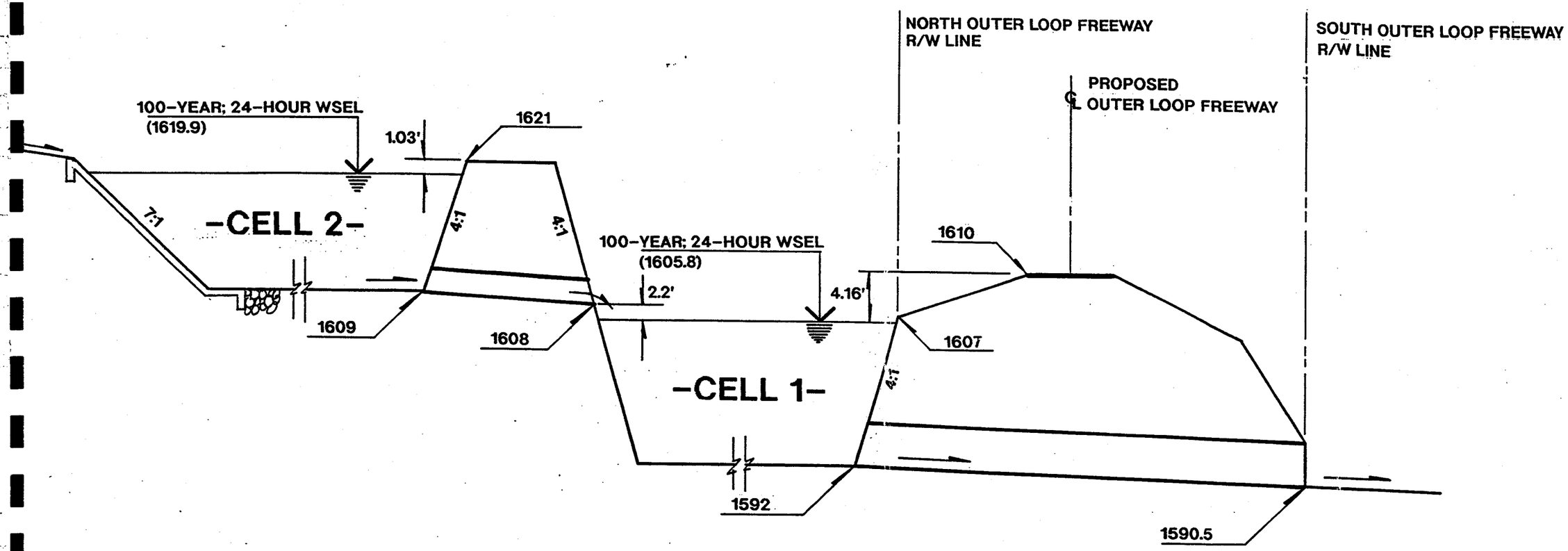

DETENTION BASIN 53R

NTS

FIGURE 5
DETENTION BASIN 53R
WATER SURFACE ELEVATION
100-YEAR; 24-HOUR STORM EVENT

OUTER LOOP FREEWAY
CROSSINGS

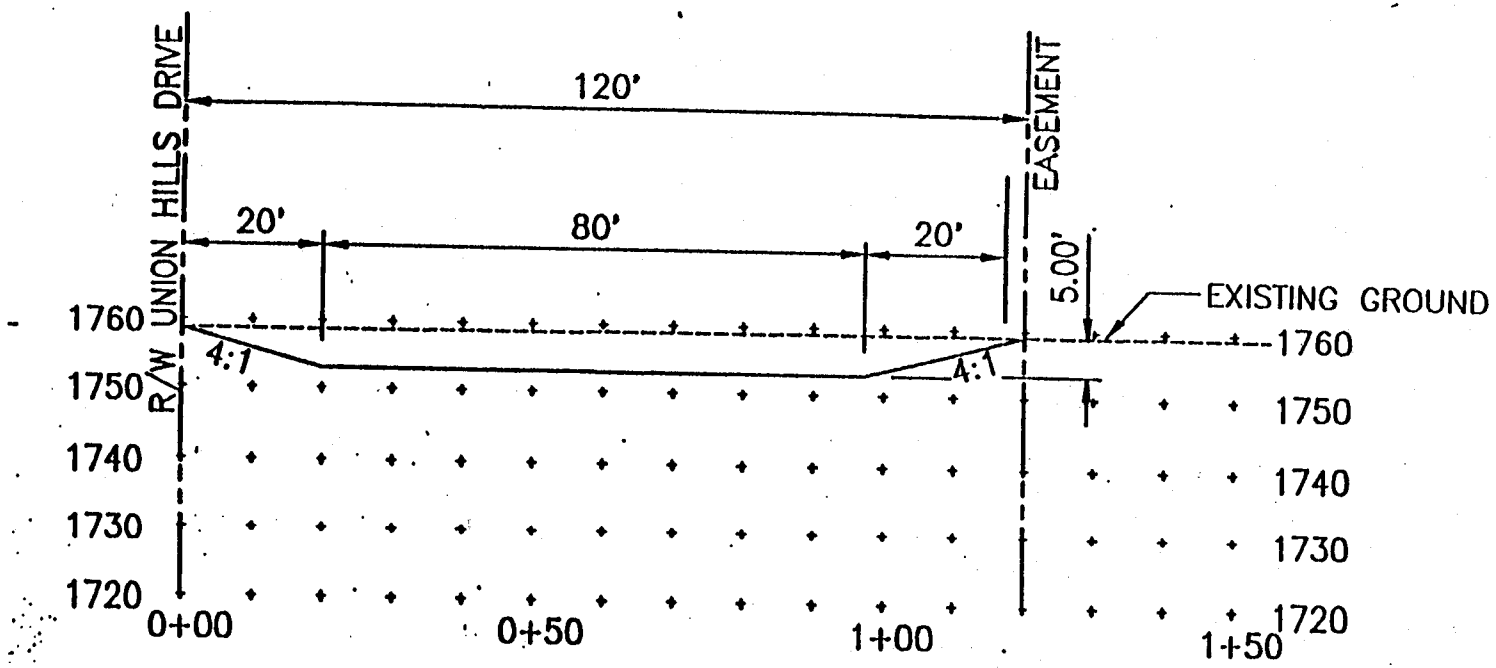

FLOW DEPTH = 3.7 FT.
FREEBOARD = 1.0 FT

UNION HILLS DRIVE CHANNEL (LOOKING DOWNSTREAM)

Q_{PK} = 2,500 cfs

N.T.S.

FIGURE 6

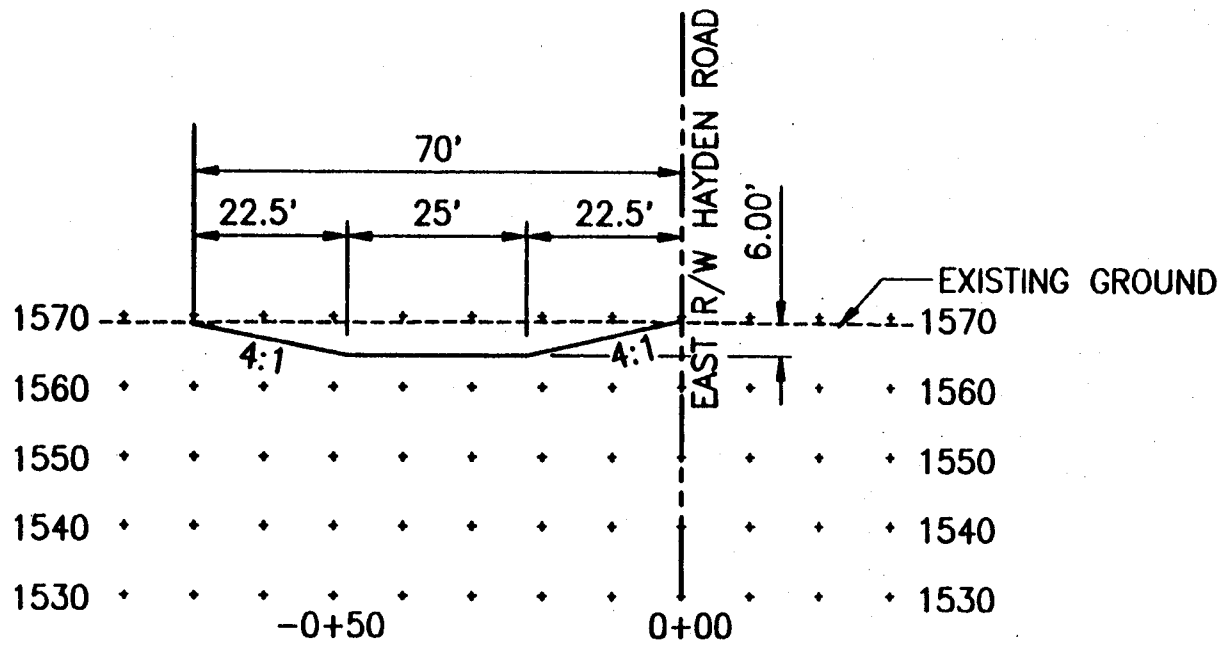

FLOW DEPTH = 3.2 FT.
FREEBOARD = 2.4 FT.

HAYDEN ROAD CHANNEL (LOOKING DOWNSTREAM)

Q_{PK} = 2,500 cfs

N.T.S.

FIGURE 7

TABLE 1

DETENTION BASIN 38R2

Elevation (Stage) [ft]	Discharge [ft^3/sec]
1595.0	0
1596.0	50
1597.0	80
1598.0	150
1599.0	240
1600.0	330
1601.0	410
1602.0	500

TABLE 2

DETENTION BASIN 53R

Elevation (Stage) [ft]	Discharge [ft^3/sec]
1592.0	0
1594.0	250
1596.0	500
1598.0	900
1600.0	1,400
1602.0	1,900
1604.0	2,300
1606.0	2,525

Future Pima Road Crossing East of the Outer Loop: After reviewing the proposed ADOT OLF alignment plans, only areas 21A and 21B, as shown in Plate 1, are tributary to the proposed culvert crossing. The culvert profile is shown on Plate 3 and is located within the Pima Road right-of-way (only). Ultimately the storm water will discharge to the CAP Basin No. 4 which is east of the present Pima Road north-south alignment. As stated earlier ADOT will be establishing the drainage design for the OLF and will, therefore, establish the outlet channel from Pima Road to the CAP Basin No. 4.

HYDRAULICS

CULVERT ANALYSIS

In order to maintain a relatively standard design which can be economically constructed, a standard size box culvert was selected to be used at the culvert locations. The size and number of barrels selected for each specific location is presented in Table 3.

The hydraulic analysis is based on the procedures in the Hydraulic Design Series Nº 5 (HDS) (Ref. 8). Sample computations are included in Appendix C. All the culverts operate in inlet control.

The results of the HEC-1 and Culvert Analysis are identified in the following Table 3.

TABLE 3

Culvert Crossing Location	ADOT Outer Loop Station	HEC-1 100-Year, 24-Hour Storm	Culvert Size No. of Barrels Span X Rise
Scottsdale Road	--	588 cfs	2 - 10′ x 4′ Box
38R2	1884+11 - 0° skew	457 cfs	1 - 10′ x 6′ Box
53R	1941+72 - 8° skew	2,507 cfs	2 - 10′ x 10′ Box
Pima Road	--	377 cfs	4 - 8′ x 3′ Box

SPECIAL CONSIDERATIONS

- In order to accommodate maintenance vehicles, the box culvert outletting Detention Basin 53R has been designed with a minimum height of 10 feet.

- It is important to note that the Hayden Road centerline shown at the OLF and the Hayden Road centerline on the State Plat Map are out of alignment and will require modification by others.

- The entire section of the proposed freeway, from Pima Road crossing to the Scottsdale Road crossing, affects the Bureau of Reclamation (USBR) flood detention Dike 3. This dike provides short-term detention of inflows from a Probable Maximum Flood (PMF) series. The PMF series consist of runoff from a 100-year antecedent storm followed within 24 hours by the Probable Maximum Storm.

  The proposed freeway must be constructed such that runoff will not be diverted from its natural course and will not affect the routing of the PMF into Dike 3. There will exist at least one low point in the freeway between each spur so that overtopping of the highway can occur, thereby conveying PMF flows.

  Since PMF discharges are designed to overtop the freeway, attention should be given to objects obstructing flows, such as barriers or vegetation.

CONCLUSIONS

The results of this report provide conceptual design solutions for use by the Arizona Department of Transportation during the design of the Future Outer Loop Freeway between Pima and Scottsdale Roads.

This report which was initiated by the City of Scottsdale, utilizes both regional and local hydrologic data thus far developed by the City of Scottsdale and Grayhawk Development, Inc. Grayhawk Development is the major developer currently planning for the development of approximately 1,600 acres just north of the Outer Loop Freeway.

Based on the results of this study, it can be conclude that the Outer Loop Freeway will require the following drainage infrastructure to convey floodwaters to the CAP Dike 3:

- Scottsdale Road — 2-RCB 10'w x 4'h
- Detention Basin 38R1 — 1-RCB 10'w x 6'h
- Detention Basin 53R — 2-RCB 10'w x 10'h
- Pima Road — 4-RCB 8'w x 3'h

Also, four collector channels will have to be designed to effectively convey stormwaters to the planned detention basins north of the Outer Loop Freeway as follows:

1. Collector channel starting east of Scottsdale Road and ending at proposed Detention Basin 38R2. This channel will convey the excess runoff generated by the drainage area CN5A as shown in Plate 1.
2. Collector channel starting west of Hayden Road and ending at proposed Detention Basin 38R2. This channel will convey the excess runoff generated by the drainage area CN5B as shown in Plate 1.
3. Collector channel starting east of Hayden Road and ending at proposed Detention Basin 53R. This channel will convey the excess runoff generated by the drainage area CN5C as shown in Plate 1.
4. Collector channel starting east of Pima Road and ending at the CAP Dike 4. This channel will convey the excess runoff generated by the drainage areas 21A and 21B, also shown in Plate 1.

REFERENCES

1. City of Scottsdale, Arizona. *Design Standards and Policies, Chapter 2, Drainage.* Revised January, 1993.

2. Federal Emergency Management Agency (FEMA). *Flood Insurance Rate Map, Map Number 04013C1245E.* December, 1993

3. Federal Emergency Management Agency (FEMA). *Flood Insurance Study Guidelines and Specifications (FEMA 37).* March, 1993

4. Federal Emergency Management Agency (FEMA). *National Flood Insurance Program and Related Regulations.* Revised October, 1990

5. Flood Control District of Maricopa County. *Drainage Design Manual, Volume II, Hydraulics.* November, 1991

6. U. S. Army Corps of Engineers. *HEC-1 Flood Hydrograph Package, Version 4.0.* September, 1990

7. U. S. Army Corps of Engineers. *Hydraulic Design of Flood Control Channels, EM 1110-2-1601.* July, 1970

8. U.S. Department of Transportation, Federal Highway Administration. *Hydraulic Design of Highway Culverts, HDS Nº 5.* September, 1985.

9. U. S. Geological Survey, Water Resources Division. *Estimated Manning's Roughness Coefficients for Stream Channels and Floodplains in Maricopa County, Arizona.* April, 1991.

10. Water Resources Associates, Inc. *Upper Indian Bend Wash Regional Drainage Flood Control Plan.* July, 1992

```
****************************************
*                                      *
*   FLOOD HYDROGRAPH PACKAGE  (HEC-1)  *
*              MAY   1991              *
*           VERSION 4.0.1E             *
*                                      *
*  RUN DATE  06/24/94  TIME  09:48:49  *
*                                      *
****************************************
```

```
****************************************
*                                      *
*    U.S. ARMY CORPS OF ENGINEERS      *
*    HYDROLOGIC ENGINEERING CENTER     *
*         609 SECOND STREET            *
*       DAVIS, CALIFORNIA 95616        *
*          (916) 551-1748              *
*                                      *
****************************************
```

```
X     X  XXXXXXX   XXXXX          X
X     X  X        X     X        XX
X     X  X        X              X
XXXXXXX  XXXX     X        XXXXX X
X     X  X        X              X
X     X  X        X     X        X
X     X  XXXXXXX   XXXXX         XXX
```

THIS PROGRAM REPLACES ALL PREVIOUS VERSIONS OF HEC-1 KNOWN AS HEC1 (JAN 73), HEC1GS, HEC1DB, AND HEC1KW.

THE DEFINITIONS OF VARIABLES -RTIMP- AND -RTIOR- HAVE CHANGED FROM THOSE USED WITH THE 1973-STYLE INPUT STRUCTURE.
THE DEFINITION OF -AMSKK- ON RM-CARD WAS CHANGED WITH REVISIONS DATED 28 SEP 81. THIS IS THE FORTRAN77 VERSION
NEW OPTIONS: DAMBREAK OUTFLOW SUBMERGENCE , SINGLE EVENT DAMAGE CALCULATION, DSS:WRITE STAGE FREQUENCY,
DSS:READ TIME SERIES AT DESIRED CALCULATION INTERVAL LOSS RATE:GREEN AND AMPT INFILTRATION
KINEMATIC WAVE: NEW FINITE DIFFERENCE ALGORITHM

```
LINE          ID.......1.......2.......3.......4.......5.......6.......7.......8.......9......10

  1           ID        UPPER INDIAN BEND WASH REGIONAL FLOOD CONTROL & DRAINAGE PLAN
  2           ID        OUTER LOOP HIGHWAY AND CORE NORTH PROJECTS IN SCOTTSDALE
  3           ID
  4           ID        PRELIMINARY CONCEPT DESIGN ANALYSES JULY 23, 1992    ********PRELIMINARY
  5           ID        FINAL REVISION 9/14/92 BY CITY STAFF BASED ON ADOT REVIEW NOTES 8/6/92
  6           ID
  7           ID        UPPER INDIAN BEND WASH REGIONAL MODEL REVISED TO ACCOMMODATE PROJECT
  8           ID        PREPARED BY CITY OF SCOTTSDALE TRANSPORTATION PLANNING STAFF
  9           ID
 10           ID        NOTE:
 11           ID        FINAL ANALYSES IS A FUNCTION OF THE DESIGN PROCESS
 12           ID
 13           ID        ************************************************************************
 14           ID        ************************************************************************
 15           ID        *                                                                      *
 16           ID        MODEL OLP.24, MEETING ADOT 24HR OUTER-LOOP HIGHWAY REQUIREMENTS        *
 17           ID        *                                                                      *
 18           ID        REVISION TO UIBW MP9R.24I INCLUDING ALL MODIFICATIONS TO MODEL         *
 19           ID        AS OF SEPTEMBER 14, 1992                                               *
 20           ID        *                                                                      *
 21           ID        ************** ALL VEGETATION DIVERSIONS REMOVED ********************** *
 22           ID        ************** ALL OF CORE SOUTH SLA MODEL REMOVED ******************** *
 23           ID        ***** ALL BASINS AND CHANNELS WEST OF SCOTTSDALE ROAD REMOVED ******** *
 24           ID        ***** ALL BUREAU OF RECLAMATION DAMS REMOVED ***************************
 25           ID        *                                                                      *
 26           ID        SUB-BASIN 1470 ADDED TO RAWHIDE WASH AREA PER FIS92 FINDINGS           *
 27           ID        *                                                                      *
 28           ID        PRECIPITATION ADJUSTED TO ACCOMMODATE WATERSHEDS TRIBUTARY TO EACH     *
 29           ID        STORAGE BASIN, I.E. ARF IS BASED ON EACH STORAGE BASIN WATERSHED       *
 30           ID        *                                                                      *
 31           ID        ALL CHANNEL ROUTING IS NORMAL DEPTH/MODIFIED PULS WITH CONFIGURATION   *
 32           ID        TO ASSURE STABILITY AND ELIMINATE FDKRUT WARNING                       *
 33           ID        CHANNEL Z = 1 AND LOW FLOW Z = 0, PER CITY STAFF RECOMMENDATIONS       *
 34           ID        *                                                                      *
 35           ID        UPPER INDIAN BEND WASH REGIONAL MODEL DESCRIPTION AS LISTED BELOW      *
 36           ID        ************************************************************************
 37           ID        *                                                                      *
 38           ID        ************************************************************************
 39           ID
 40           ID        FROM UIBW 7/9/92 MODEL MP9R.24I -- SUB-BASIN SERIES 7B TO 53.1
 41           ID        BASE MODEL WAS MP9.24I MODIFIED TO REFLECT CITY OF SCOTTSDALE & G.W.
 42           ID        LARSONS & ASSC. CORE NORTH PLAN DATED JUNE 16, 1992
 43           ID        ADOT REVIEW COMMENTS INCLUDED IN SEPTEMBER 14, 1992 REVISION
 44           ID
 45           ID        THIS MODEL TO BE RUN USING HEC-1 VERSION 4.0, SEPT 1990 OR LATER
 46           ID
 47           ID        THIS IS AN INTEGRATED MASTER PLAN MODEL WITH A NORTH-SOUTH INTERCEPTOR
 48           ID        CHANNEL IN-PLACE ALONG PIMA ROAD FROM POINT 3A TO 3K TO 3L.
 49           ID        ALL CORE NORTH-CORE SOUTH CHANNELS & DETENTION BASINS ARE IN-PLACE.
 50           ID        THE RAWHIDE WASH CHANNEL IS IN-PLACE ALONG ALIGNMENT 4A-4B-4D.
 51           ID        A NORTH-SOUTH INTERCEPTOR CHANNEL IS IN-PLACE ALONG SCOTTSDALE ROAD FROM
 52           ID        POINT 4C TO 4B.
 53           ID
 54           ID        FUTURE CONDITION LAND-USE, WITH DEVELOPED CONDITION CHANNELIZATION
 55           ID        LOW-FLOW CULVERT DIVERSIONS ARE REMOVED
```

```
LINE          ID.......1.......2.......3.......4.......5.......6.......7.......8.......9......10

  56          ID       DETENTION BASINS 38R-1, 38R-2, & 53R HAVE BEEN MODIFIED TO REFLECT
  57          ID       6/16/92 STAGE/STORAGE/DISCHARGE CHANGES BY CITY OF SCOTTSDALE, AND
  58          ID       SQ CARDS MODIFIED TO REFLECT SS & ST ASSUMPTIONS
  59          ID       CN5 & 33A HAVE BEEN MODIFIED TO REFLECT DRAINAGE SPLIT ON MARLEY PARCEL
  60          ID       SUB-BASIN 33ACM REFLECTS ONLY AREA WITHIN SCOTTSDALE
  61          ID
  62          ID       100% OF REATA PASS FAN IS DIVERTED SOUTH TO CAP DIKE 4.
  63          ID
  64          ID       THIS MODEL REFLECTS ALL D.A. ADJUSTMENTS MADE TO MODEL F3.241 AND FLOW
  65          ID       DIVERSIONS NEAR RAWHIDE WASH APEX & PINNACLE PEAK.
  66          ID
  67          ID       FUTURE LAND-USE DENSITIES FROM OCT 1987 GENERAL PLAN,  AND
  68          ID       THE TONTO FOOTHILLS PLAN,    ALL SCOTTSDALE RESIDENTIAL AREAS HAVE THE
  69          ID       PERCENT OF IMPERVIOUS COVER ADJUSTED FOR NAOS REQUIREMENTS.
  70          ID     ******************************************************************************
  71          ID       ****************************************************************************
  72          ID         ************************************************************************
  73          ID
  74          ID       THIS MODEL HAS BEEN MODIFIED TO REFLECT GRAYHAWK DEVELOPMENT MOST RECENT
  75          ID       INFORMATION AS FOLLOWS:
  76          ID
  77          ID          1.  PIMA ROAD CHANNEL FROM DEER VALLEY RD. SOUTH TO REGIONAL
  78          ID              DETENTION BASIN 53R IS CONSIDERED RECTANGULAR WITH CONCRETE-LINED
  79          ID              WALLS AND SOIL CEMENT BOTTOM PER CITY'S STAFF.
  80          ID
  81          ID          2.  SPLIT FLOW RATIO AT PROPOSED DEER VALLEY CHANNEL IS CHANGED DUE
  82          ID              TO NEW PLAN IN GRAYHAWK'S VILLAGE 2. (SEE KK 37AE)
  83          ID
  84          ID          3.  NO ON-SITE STORMWATER RETENTION IS ASSUMED ON GOLF COURSE SOUTH
  85          ID              OF THOMPSON PEAK PARKWAY.(DESPITE THE FACT THAT SUCH RETENTION
  86          ID              EXISTS)
  87          ID
  88          ID          4.  DETENTION BASIN 38R1 IS RE-ROUTED TO DET. BASIN 53R ACCORDING
  89          ID              TO NEW CITY'S DRAINAGE REGIONAL PLAN.
  90          ID
  91          ID          5.  DETENTION BASIN 53R IS COMPOSED OF TWO CELLS (1 & 2)
  92          ID
  93          ID          6.  DRAINAGE AREA (BA CARD) IS CHANGED FOR SUBBASIN CN1, CN2, CN3,
  94          ID              CN4, CN5, AND CN6; ALONG WITH FLOW PATH LENGTHS.
  95          ID
  96          ID          7.  TIME OF SIMULATION IS EXTENDED TO 48 HOURS TO BETTER EVALUATE
  97          ID              DET. BASINS TOTAL DRAINING TIME.
  98          ID
  99          ID       ***********************************************************************
 100          ID       *   LARGE ARRAY VERSION OF HEC-1 (MAY 1991)                           *
 101          ID       *                                                                     *
 102          ID       *   100-YEAR; 24-HOUR STORM EVENT                                     *
 103          ID       *                                                                     *
 104          ID       *   FILE: OLFC24U.DAT                                JOB # 23019      *
 105          ID       ***********************************************************************
 106          ID
 107          ID
              *DIAGRAM
 108          IT       5 14SEP92                 16SEP92
 109          IO       5       0
```

```
LINE          ID.......1.......2.......3.......4.......5.......6.......7.......8.......9......10

 110          KK     31B      SUB
 111          KM        RUNOFF FROM SUB-BASIN 31B
 112          BA   .9898
 113          PH          9.3323     .84    1.53    2.46    2.75    2.95    3.32    3.79    4.26
 114          LS              74    13.8
 115          UK     102   .0213     .10     100
 116          RK    8800   .0228    .045            TRAP      50     130

 117          KK    36L2      SUB
 118          KM        RUNOFF FROM SUB 36L2
 119          BA   .1736
 120          LS              74    18.4
 121          UK     116   .0213     .10     100
 122          RK    3000   .0269    .045            TRAP      50     130

 123          KK    32.1       CP
 124          KM        COMBINE SUB 31B & SUB 36L2
 125          HC       2

 126          KK    32.3       CP
 127          KM        ROUTE FLOW THROUGH SUB 32 A
 128          RS       2    FLOW      -1
 129          RC    .055    .035    .055    8000   .0214
 130          RX       0       8      20      20      60      60      72      80
 131          RY      10       2       2       0       0       2       2      10

 132          KK     32A      SUB
 133          KM        RUNOFF FROM SUB-BASIN 32A
 134          BA   .8745
 135          LS              74    20.0
 136          UK      67   .0213     .10     100
 137          RK    8000   .0214    .045            TRAP      50     130

 138          KK    32A3
 139          KM        COMBINING FLOW (CP 32.3 & SUB 32A) TO BE ROUTED TO PHOENIX
 140          HC       2

 141          KK     30R      SUB
 142          KM        RUNOFF FROM SUB-BASIN 30R
 143          BA  1.3105
 144          LS              82     6.6
 145          UK     110   .0408     .20     100
 146          RK   10640   .0371    .045            TRAP      50     100

 147          KK      DD       CP
 148          KM        PREVIOUSLY NOTED AS 31.1 IN THE UPPER INDIAN BEND WASH PLAN
 149          KM        ROUTE FLOW DOWN PIMA ROAD CHANNEL TO THE BOTTOM OF SUB 31A
 150          KM        ALL ROUTING OPERATIONS REFLECT FULLY DEVELOPED CHANNEL CONDITIONS
 151          KM        AT BUILD-OUT.  EXISTING SHEET OR LARGE CHANNEL FLOWS ELIMINATED
 152          RS       2    FLOW      -1
 153          RC    .055    .035    .055    5600   .0194
 154          RX       0       8      20      20      60      60      72      80
 155          RY      10       2       2       0       0       2       2      10
```

```
LINE          ID.......1.......2.......3.......4.......5.......6.......7.......8.......9......10

 156          KK     31A      SUB
 157          KM         RUNOFF FROM SUB 31A
 158          BA    .4132
 159          LS                70     15.0
 160          UK     102    .0213      .10      100
 161          RK    2500    .0213     .045     .042     TRAP       8       2
 162          RK    5600    .0194     .035              TRAP      40       2

 163          KK     34R      SUB
 164          KM         RUNOFF FROM SUB 34R
 165          KM         UK SLOPE ALTERED FROM .0408 TO ACHIEVE STABILITY
 166          BA    .6421
 167          LS                77      9.9
 168          UK     110    .0400      .20      100
 169          RK    6800    .0644     .045              TRAP      50     100

 170          KK    31.3       CP
 171          KM         ROUTE SUB 34R TO CP 31.3
 172          RS       2     FLOW       -1
 173          RC    .055     .035     .055     4500    .0243
 174          RX       0        8       20       20       60      60      72      80
 175          RY      10        2        2        0        0       2       2      10

 176          KK    31.2       CP
 177          KM         COMBINE SUB 31A, CP DD, & CP 31.3
 178          HC       3

 179          KK      CC       CP
 180          KM         PREVIOUSLY NOTED AS 36.2 ON THE UPPER IBW PLAN
 181          KM         ROUTE FLOW DOWN PIMA ROAD CHANNEL TO THE BOTTOM OF SUB 36L1
 182          RS       1     FLOW       -1
 183          RC    .055     .035     .055     3600    .0194
 184          RX       0        8       28       28      104     104     124     132
 185          RY      10        2        2        0        0       2       2      10

 186          KK     35N      SUB
 187          KM         RUNOFF FROM SUB-BASIN 35N
 188          KM         THIS BASIN DRAINS TO A CBC AT THE EAST SIDE OF DESERT HIGHLANDS
 189          KM         D.A. HAS BEEN UPDATED TO REFLECT CHANGE FROM REATA PASS SENSITIVITY
 190          KM         STUDY PUBLISHED IN FEB 1992
 191          BA    .4563
 192          LS                82     31.8
 193          UK     265    .0381      .20      100
 194          RK    5200    .0269     .045              TRAP      25       4

 195          KK    35N2      DIV
 196          KM         DIVERT FLOW THROUGH BLOCK WALL OPENINGS AT EAST SIDE OF DESERT HIGHLANDS
 197          DT    35N1
 198          DI       0      100     1000
 199          DQ       0       40      400
```

```
LINE          ID.......1.......2.......3.......4.......5.......6.......7.......8.......9......10

 200          KK    35L1      CP
 201          KM        ROUTE DIV 35N2 TO CP 35L1
 202          RS       3    FLOW      -1
 203          RC    .055    .035    .055    7500   .0367
 204          RX       0       8      20      20      60      60      72      80
 205          RY      10       2       2       0       0       2       2      10

 206          KK     35L     SUB
 207          KM        RUNOFF FROM SUB 35L
 208          BA   .6521
 209          LS              78    12.7
 210          UK     265   .0381     .20     100
 211          RK    9400   .0463    .045            TRAP      50     100

 212          KK    35L2      CP
 213          KM        COMBINE SUB 35L & CP 35L1
 214          HC       2

 215          KK    36LA      CP
 216          KM        ROUTE CP 35L2 TO CP 36LA
 217          RS       1    FLOW      -1
 218          RC    .055    .035    .055    4350   .0269
 219          RX       0       8      20      20      60      60      72      80
 220          RY      10       2       2       0       0       2       2      10

 221          KK    36L1     SUB
 222          KM        RUNOFF FROM SUB 36L1
 223          BA   .4125
 224          LS              73     7.2
 225          UK     116   .0213     .10     100
 226          RK    4350   .0269    .045            TRAP      50     130

 227          KK      CB
 228          KM        COMBINE HYDROGRAPHS REPLACING KINEMATIC WAVE COMBINING IN BASIN 36L1
 229          KM        THIS OPERATION COMBINES SUB 36L1 AND CP36LA
 230          HC       2

 231          KK    36.3      CP
 232          KM        ROUTE CP CB TO CP 36.3
 233          RS       1    FLOW      -1
 234          RC    .055    .035    .055    2000   .0194
 235          RX       0       8      28      28     104     104     124     132
 236          RY      10       2       2       0       0       2       2      10

 237          KK    36.4      CP
 238          KM        COMBINE CP CC & CP 36.3
 239          HC       2

 240          KK      BB      CP
 241          KM        FORMERLY 36.7 IN THE UPPER INDIAN BEND WASH PLAN
 242          KM        ROUTE FLOW DOWN PIMA ROAD CHANNEL TO BOUNDARY OF SUB 36R1
 243          RS       1    FLOW      -1
 244          RC    .055    .035    .055    1850   .0194
 245          RX       0       8      28      28     104     104     124     132
```

```
LINE          ID.......1.......2.......3.......4.......5.......6.......7.......8.......9......10

 246          RY      10       2       2       0       0       2       2      10

 247          KK    35N1     RET
 248          KM        RETRIEVE DIVERTED FLOW FROM SUB 35N
 249          DR    35N1

 250          KK    35R1      CP
 251          KM        ROUTE DIV 35N1 THROUTH SUB 35R
 252          RS       3    FLOW      -1
 253          RC    .055    .035    .055    7700   .0357
 254          RX       0       8      15      15      35      35      42      50
 255          RY      10       2       2       0       0       2       2      10

 256          KK     35R     SUB
 257          KM        RUNOFF FROM SUB 35R
 258          KM        D.A. HAS BEEN UPDATED TO REFLECT CHANGE FROM REATA PASS SENSITIVITY
 259          KM        STUDY PUBLISHED IN FEB 1992
 260          BA   .4096
 261          LS              77    10.4
 262          UK     265   .0381     .20     100
 263          RK    7700   .0357    .045            TRAP      50     100

 264          KK   CB35R
 265          KM        COMBINING SUB 35R AND CP 35R1
 266          HC       2

 267          KK   36R1R      CP
 268          KM        ROUTE CB 35R FLOWS THROUGH SUB 36R1
 269          RS       2    FLOW      -1
 270          RC    .055    .035    .055    6500   .0331
 271          RX       0       8      20      20      60      60      72      80
 272          RY      10       2       2       0       0       2       2      10

 273          KK    36R1     SUB
 274          KM        RUNOFF FROM SUB 36R1
 275          BA   .6736
 276          LS              72    19.5
 277          UK     116   .0213     .10     100
 278          RK    6500   .0331    .045            TRAP      50     130

 279          KK    36.8      CP
 280          KM        COMBINE SUB 36R1, CP BB & 36R1R
 281          KM        D.A. FOR SUB 36R1 HAS BEEN REDUCED TO REFLECT THE PIMA ROAD CHANNEL
 282          HC       3

 283          KK      AA      CP
 284          KM        ROUTE FLOW DOWN PIMA ROAD CHANNEL TO DEER VALLEY ROAD
 285          KM        THIS LOCATION TIES INTO THE CORE NORTH, PIMA ROAD CHANNEL.
 286          KM        PREVIOUSLY NOTED AS 37.1 IN THE UPPER INDIAN BEND WASH PLAN
 287          RS       1    FLOW      -1
 288          RC    .055    .035    .055    3950   .0194
 289          RX       0       8      28      28     104     104     124     132
 290          RY      10       2       2       0       0       2       2      10
```

```
LINE          ID.......1.......2.......3.......4.......5.......6.......7.......8.......9......10

 291          KK     37B      SUB
 292          KM         RUNOFF FROM SUB 37B
 293          BA   .1148
 294          LS              73    15.4
 295          UK      61   .0213     .10     100
 296          RK    1300   .0237    .045            TRAP      25       3

 297          KK    37.2      CP
 298          KM         ROUTE SUB 37B DOWN PIMA ROAD CHANNEL TO DEER VALLEY ROAD
 299          RS       1    FLOW      -1
 300          RC    .055    .035    .055    1900   .0194
 301          RX       0       8      28      28     104     104     124     132
 302          RY      10       2       2       0       0       2       2      10

 303          KK    37.3      CP
 304          KM         COMBINE CP AA & CP 37.2
 305          HC       2

 306          KK       A      CP
 307          KM         ROUTE FLOW DOWN CORE NORTH, PIMA ROAD CHANNEL
 308          KM         FORMERLY LISTED AS 52.1 IN THE UPPER INDIAN BEND WASH PLAN
 309          RS       1    FLOW      -1
 310          RC    .055    .035    .055    4100   .0223
 311          RX       0      50     100     150     200     210     215     220
 312          RY       7       7       7       0       0       7       7       7

 313          KK   SUB49
 314          KM         RUNOFF FROM SUB-BASIN 49
 315          BA   .3528
 316          LS              79     6.9
 317          UK     135   .0758     .20     100
 318          RK    5400   .0370    .045            TRAP      30       3

 319          KK    49.2      CP
 320          KM         ROUTE SUB 49 THROUGH SUB 51
 321          RS       2    FLOW      -1
 322          RC    .055    .035    .055    6400   .0329
 323          RX       0       8      20      20      60      60      72      80
 324          RY      10       2       2       0       0       2       2      10

 325          KK   SUB51
 326          KM         RUNOFF FROM SUB-BASIN 51
 327          BA  1.0201
 328          LS              72    12.8
 329          UK      94   .0213     .10     100
 330          RK    6400   .0329    .045            TRAP    1500       2

 331          KK    51.1      CP
 332          KM         COMBINING ROUTED SUB 49 FLOWS WITH SUB 51
 333          HC       2
```

```
LINE          ID.......1.......2.......3.......4.......5.......6.......7.......8.......9......10

 334          KK    51.2      CP
 335          KM        ROUTE FLOW FROM SUB 49 & 51 THROUGH SUB 52A
 336          RS       2    FLOW      -1
 337          RC    .055    .035    .055    5800   .0300
 338          RX       0       8      20      20      60      60      72      80
 339          RY      10       2       2       0       0       2       2      10

 340          KK     52A     SUB
 341          KM        RUNOFF FROM SUB-BASIN 52A
 342          BA  1.0474
 343          LS              71    17.7
 344          UK      76   .0213     .10     100
 345          RK    5800   .0300    .045            TRAP    2500       2

 346          KK    52.2      CP
 347          KM        COMBINE SUB 52A, CP 51.2 & CHANNEL A
 348          HC       3

 349          KK       B      CP
 350          KM        ROUTE RUNOFF FROM CP 52.2 DOWN PIMA ROAD CHANNEL TO COMBINE WITH
 351          KM        RUNOFF FROM SUB 53A.
 352          KM        PREVIOUSLY NOTED AS 52A1 IN THE UPPER INDIAN BEND WASH PLAN
 353          RS       2    FLOW      -1
 354          RC    .035    .035    .035    5300   .0150
 355          RX       0      50     100     150     200     210     215     220
 356          RY       7       7       7       0       0       7       7       7

 357          KK     53A     SUB
 358          KM        RUNOFF FROM SUB-BASIN 53A
 359          BA   .3329
 360          LS              74      18
 361          UK      67   .0213     .10     100
 362          RK    4000   .0196    .045            TRAP      50      50

 363          KK    53A1      CP
 364          KM        COMBINE SUB 53A & CP "B"
 365          HC       2

 366          KK   DB3.1      CP
 367          KM        ROUTE CP 53A1 TO DETENTION BASIN 53R
 368          RS       1    FLOW      -1
 369          RC    .035    .035    .035    2200   .0150
 370          RX       0      50     100     150     200     210     215     220
 371          RY       7       7       7       0       0       7       7       7

 372          KK     37A     SUB
 373          KM        RUNOFF FROM SUB-BASIN 37A
 374          BA   .6765
 375          LS              74    24.8
 376          UK      61   .0213     .10     100
 377          RK    4800   .0237    .045            TRAP      50     130
```

```
LINE          ID.......1.......2.......3.......4.......5.......6.......7.......8.......9......10

 378          KK    37AE     DIV
 379          KM        SPLIT FLOWS AT SOUTH BOUNDARY OF SUB 37A FOR ROUTING TO DETENTION
 380          KM        BASIN 53R & 38R-1.  THIS DIVERT OPERATION REFLECTS THE BREAK IN THE
 381          KM        DEER VALLEY ROAD CHANNEL BETWEEN HAYDEN & PIMA ROADS.  THIS SPLIT IS
 382          KM        BASED ON NEW CORE NORTH PLAN DEVELOPED BY G.W. LARSON & ASSC., INC.
 383          KM        DATED 3/21/94.
 384          DT    37AW
 385          DI       0   10000
 386          DQ       0    7000

 387          KK   37AE1      CP
 388          KM        ROUTE NON-DIVERTED FLOW FROM DIV 37AE THROUGH SUB CN6 TO POWER
 389          KM        CORRIDOR.
 390          RS       4    FLOW      -1
 391          RC    .055    .045    .055   10500     .03
 392          RX       0       8      15      15      35      35      42      50
 393          RY      10       2       2       0       0       2       2      10

 394          KK     CN6     SUB
 395          KO       3
 396          KM        RUNOFF FROM SUB CN6 (REVISED: 5/1/90)(REVISED: 5/10/94)
 397          BA   1.254
 398          LS              74    40.3
 399          UK     100   .0150     .15     100
 400          RK    1400   .0100    .018   .1921    TRAP      30       5
 401          RK    9000   .0070    .045            TRAP     100      20

 402          KK    RET6
 403          KO       3
 404          KM        DIVERT OUT ON-SITE RETENTION VOLUME
 405          DT    RET6      60
 406          DI       0   10000
 407          DQ       0   10000

 408          KK    37AW     RET
 409          KM        RETRIEVE DIVERTED FLOW FROM SOUTH BOUNDARY OF SUB 37A TO REFLECT
 410          KM        BREAK IN DEER VALLEY ROAD CHANNEL BETWEEN HAYDEN & PIMA ROADS
 411          DR    37AW

 412          KK    CNC3      CP
 413          KM        ROUTE RET 37AW TO CP CNC3
 414          RS       1    FLOW      -1
 415          RC    .055    .035    .055    3000   .0125
 416          RX       0       8      20      20      60      60      72      80
 417          RY      10       2       2       0       0       2       2      10

 418          KK    CNC4      CP
 419          KM        ROUTE CP CNC3 THROUGH GOLF COURSE TO CP CNC4
 420          KM        BW=100',  Z=1:1
 421          RS       1    FLOW      -1
 422          RC    .055    .035    .055    4200   .0070
 423          RX       0       8      20      20     120     120     132     140
 424          RY      10       2       2       0       0       2       2      10
```

```
LINE          ID.......1.......2.......3.......4.......5.......6.......7.......8.......9......10

 425          KK     CN1      SUB
 426          KM        RUNOFF FROM SUB CN1
 427          KM        COLLECTOR CHANNEL HAS BEEN ADDED TO SIMULATE STREET FLOW
 428          KM        THIS SAME COLLECTOR CHANNEL IS USED FOR ALL CORE NORTH SUB-BASINS
 429          KM        (REVISED 5/10/94)
 430          BA   .5781
 431          LS              74    22.8
 432          UK    100   .0150     .15     100
 433          RK   1400   .0100    .018    .147    TRAP      30       5
 434          RK   6000   .0070    .040            TRAP     100      20

 435          KK   CNC5      CP
 436          KM        COMBINE CP CNC4 & SUB CN1
 437          HC       2

 438          KK   DB1.1      CP
 439          KM        ROUTE CP CNC5 TO DETENTION BASIN 38R1 LOCATED AT THE INTXN OF HAYDEN
 440          KM        ROAD & THOMPSON PEAK PARKWAY.
 441          RS       1    FLOW      -1
 442          RC    .055    .035    .055    1200   .0150
 443          RX       0       8      20      20      60      60      72      80
 444          RY      10       2       2       0       0       2       2      10

 445          KK     CN2     SUB
 446          KM        RUNOFF FROM SUB CN2 (REVISED: 5/1/90)(REVISED 5/10/94)
 447          BA   .0861
 448          LS              74    28.1
 449          UK    100   .0150     .15     100
 450          RK   1000   .0100    .018    .111    TRAP      30       5
 451          RK   5000   .0150    .045            TRAP      25       2

 452          KK     DB1      CP
 453          KM        COMBINE CP DB1.1, SUB CN2
 454          KM        THIS IS THE TOTAL FLOW INTO DETENTION BASIN No.1
 455          HC       2
 456          ZW              A=INFLOW              B=38R1              C=FLOW

 457          KK   38R-1     DAM
 458          KM        PERFORM RESERVOIR ROUTING OPERATION FOR DETENTION BASIN No.1 (38R-1)
 459          RS       1    STOR       0
 460          SV       0      63
 461          SQ       0     700
 462          SE       0       5
 463          ST       5     300     2.9     1.5
 464          ZW              A=OUTFLOW             B=38R1              C=FLOW

 465          KK   DB2.1      CP
 466          KM        ROUTE OUTFLOW FROM DETENTION BASIN 38R1 TO DETENTION BASIN 53R (CELL2)
 467          KM        (REVISED 5/10/94)
 468          RS       1    FLOW      -1
 469          RC    .055    .045    .055    4160   .0058
 470          RX       0       5      10      15      35      40      45      50
 471          RY    1750    1746    1744    1742    1742    1744    1746    1750
```

```
LINE          ID.......1.......2.......3.......4.......5.......6.......7.......8.......9......10

472           KK     DB3      CP
473           KM        COMBINE CP DB2.1, SUB CN6, & CP 37AE1
474           KM        THIS IS THE TOTAL INFLOW TO DETENTION BASIN 53R (CELL2)
475           HC       3
476           ZW             A=INFLOW             B=CELL2            C=FLOW

477           KK   CELL2
478           KM        DETENTION BASIN 53R, CELL2 RESERVOIR ROUTING (REVISED 5/10/94)
479           RS       1    STOR       0
480           SV       0    20.9    42.7    65.3    88.7   112.9     138
481           SQ       0      60     150     225     285     330     380
482           SE    1609    1611    1613    1615    1617    1619    1621
483           ST    1621     400     2.9     1.5
484           ZW             A=OUTFLOW            B=CELL2            C=FLOW

485           KK    CN5C     SUB
486           KO       3
487           KM        RUNOFF FROM SUB CN5C (REVISED 5/10/94)
488           BA    .284
489           LS              74
490           UK     100   .0150     .15     100      10
491           RK     500   .0100    .018    .119    TRAP      30       5      10
492           RK    3980   .0150    .035            TRAP      50       2      10

493           KK     C1I
494           KO       3
495           KM        COMBINE OUTFLOW FROM CELL2 WITH INFLOW FROM PIMA RD. CHANNEL
496           HC       3
497           ZW             A=INFLOW             B=CELL1            C=FLOW

498           KK   CELL1
499           KO       3
500           KM     DETENTION BASIN LOCATED SOUTH OF THE WATER CAMPUS, 53R (CELL1)
501           KM     DISCHARGE IS MODELED THROUGH 3-10'X10' RCB CULVERTS
502           KM     INLET ELEV. AT 1592.00 FEET
503           KM     OUTLET ELEV. AT 1590.50 FEET
504           RS       1    STOR       0
505           SV       0    49.8   101.6   155.5   211.4   269.4   329.5   391.6
506           SQ       0     250     500     900    1400    1900    2300    2525
507           SE    1592    1594    1596    1598    1600    1602    1604    1606
508           ST    1606     800     2.9     1.5
509           ZW            A=OUTFLOW             B=CELL1            C=FLOW

510           KK    CN5A     SUB
511           KO       3
512           KM        RUNOFF FROM SUB CN5A (REVISED 5/10/94)
513           KM        D.A. MODIFIED TO REFLECT SPLIT IN CORRIGAN-MARLEY PARCEL
514           BA    .354
515           LS              74
516           UK     100   .0150     .15     100
517           RK     550   .0100    .018    .119    TRAP      30       5
518           RK    5300   .0150    .035            TRAP      50       2
```

```
LINE          ID.......1.......2.......3.......4.......5.......6.......7.......8.......9......10

 519          KK  5A-DET
 520          KM        ROUTE EXCESS RUNOFF FROM SUB CN5A TO DETENTION BASIN 38R2
 521          RS       1    FLOW      -1
 522          RC    .030    .016    .035    2400  0.0015
 523          RX       0       5      10    16.8    26.8    33.6      35      40
 524          RY     4.5       4     3.4       0       0     3.4       4     4.5

 525          KK    CN5B     SUB
 526          KO       3
 527          KM        RUNOFF FROM SUB CN5B (REVISED 5/10/94)
 528          BA   .5022
 529          LS              74
 530          UK     100   .0150     .15     100
 531          RK     600   .0100    .018    .119    TRAP      30       5
 532          RK    4200   .0150    .035            TRAP      50       2

 533          KK  5B-DET
 534          KM        ROUTE EXCESS RUNOFF FROM SUB CN5B TO DETENTION BASIN 38R2
 535          RS       1    FLOW      -1
 536          RC    .030    .016    .030    2400  0.0020
 537          RX       0       5      10      15      20      25      30      40
 538          RY     3.5       3     2.5       0       0     2.5       3     3.5

 539          KK     CN5
 540          KM        COMBINE RUNOFF FROM CN5A, CN5B, AND CN5C
 541          HC       2
 542          ZW            A=INFLOW                B=38R2              C=FLOW

 543          KK   38R-2     DAM
 544          KO       3
 545          KM        PERFORM RESERVOIR ROUTING OPERATION FOR DETENTION BASIN No.2 (38R-2)
 546          KM        USE RESERVOIR DATA PROVIDED BY CITY OF SCOTTSDALE
 547          KM        OUTLET = 1-10wX6h CBC
 548          RS       1    STOR
 549          SV       0     .12     1.0     3.2     6.9    11.8    17.7    24.7    32.6    41.4
 550          SV    51.1    62.2
 551          SQ       0      50      80     150     240     330     410     500     600     660
 552          SQ     721     809
 553          SE    1595    1596    1597    1598    1599    1600    1601    1602    1603    1604
 554          SE    1605    1606
 555          ST    1606     750     2.9     1.5
 556          ZW           A=OUTFLOW                B=38R2              C=FLOW
              * ************************************************************************************
 557          KM        CORE SOUTH ROUTES REMOVED FROM THIS MODEL CORE SOUTH CHANNEL SYSTEM.
              * ************************************************************************************

 558          KK     CN4     SUB
 559          KM        RUNOFF FROM SUB CN4
 560          BA   .5546
 561          LS              74    48.9
 562          UK     100   .0150     .15     100
 563          RK    1400   .0100    .018    .111    TRAP      30       5
 564          RK    5400   .0150    .035            TRAP      75       2
```

```
LINE          ID.......1.......2.......3.......4.......5.......6.......7.......8.......9......10

 565          KK     CN3     SUB
 566          KM        RUNOFF FROM SUB CN3 (REVISED 5/10/94)
 567          BA   .2847
 568          LS              74    47.7
 569          UK     100   .0150     .15     100
 570          RK    1400   .0100    .018    .078    TRAP      30       5
 571          RK    3500   .0100    .035            TRAP      25       2

 572          KK     3-4
 573          KM        ROUTE BASIN CN3 TO SCOTTSDALE RD AND GRAYHAWK BLVD INTERSECTION
 574          RS       1    FLOW      -1
 575          RC    .025    .025    .025    2200  0.0059
 576          RX       0      10      20      30      50      60      70      80
 577          RY       3       3       3       0       0       3       3       3

 578          KK   SCOTT
 579          KM        COMBINED FLOWS FROM CN3 AND CN4 AT SCOTTSDALE RD.
 580          HC       2

 581          KK   33ACM     SUB
 582          KM        RUNOFF FROM SUB-BASIN 33ACM,
 583          KM        DRAINAGE AREA REVISED ON 8/06/92 TO REFLECT 0.2367 SQ MI AREA IN
 584          KM        SCOTTSDALE DRAINING TO SCOTTSDALE ROAD.  REMAINDER OF SUB-BASIN 33 IS
 585          KM        IN PHOENIX AN NOT PART OF THIS STUDY.  BY WARD & ERICKSON
 586          BA   .2367
 587          LS              74    57.7
 588          UK      89   .0140     .10     100
 589          RK    3800   .0160    .045            TRAP      50      50
 590          ZZ
```

SCHEMATIC DIAGRAM OF STREAM NETWORK

```
INPUT
LINE      (V) ROUTING          (--->) DIVERSION OR PUMP FLOW

 NO.      (.) CONNECTOR        (<---) RETURN OF DIVERTED OR PUMPED FLOW

 110        31B
              .
              .
 117          .        36L2
              .          .
              .          .
 123       32.1............
             V
             V
 126       32.3
              .
              .
 132          .        32A
              .          .
              .          .
 138       32A3............
              .
              .
 141          .        30R
              .          V
              .          V
 147          .        DD
              .          .
              .          .
 156          .          .        31A
              .          .          .
              .          .          .
 163          .          .          .        34R
              .          .          .          V
              .          .          .          V
 170          .          .          .       31.3
              .          .          .          .
              .          .          .          .
 176          .       31.2........................
              .          V
              .          V
 179          .        CC
              .          .
              .          .
 186          .          .        35N
              .          .          .
              .          .          .
 197          .          .          .-------->    35N1
 195          .          .       35N2
              .          .          V
              .          .          V
 200          .          .       35L1
              .          .          .
              .          .          .
 206          .          .          .        35L
              .          .          .          .
              .          .          .          .
 212          .          .       35L2............
```

```
                .         .         V
                .         .         V
215             .         .      36LA
                .         .         .
                .         .         .
221             .         .         .        36L1
                .         .         .          .
                .         .         .          .
227             .         .        CB............
                .         .         V
                .         .         V
231             .         .      36.3
                .         .         .
                .         .         .
237             .      36.4............
                .         V
                .         V
240             .        BB
                .         .
                .         .
249             .         .         .<-------    35N1
247             .         .      35N1
                .         .         V
                .         .         V
250             .         .      35R1
                .         .         .
                .         .         .
256             .         .         .        35R
                .         .         .          .
                .         .         .          .
264             .         .     CB35R............
                .         .         V
                .         .         V
267             .         .     36R1R
                .         .         .
                .         .         .
273             .         .         .       36R1
                .         .         .          .
                .         .         .          .
279             .      36.8........................
                .         V
                .         V
283             .        AA
                .         .
                .         .
291             .         .      37B
                .         .         V
                .         .         V
297             .         .     37.2
                .         .         .
                .         .         .
303             .      37.3............
                .         V
                .         V
306             .         A
                .         .
                .         .
313             .         .     SUB49
                .         .         V
                .         .         V
```

```
319          .          .        49.2
             .          .          .
             .          .          .
325          .          .          .        SUB51
             .          .          .          .
             .          .          .          .
331          .          .        51.1............
             .          .          V
             .          .          V
334          .          .        51.2
             .          .          .
             .          .          .
340          .          .          .         52A
             .          .          .          .
             .          .          .          .
346          .       52.2........................
             .          V
             .          V
349          .          B
             .          .
             .          .
357          .          .        53A
             .          .          .
             .          .          .
363          .       53A1............
             .          V
             .          V
366          .      DB3.1
             .          .
             .          .
372          .          .        37A
             .          .          .
             .          .          .
384          .          .          .-------->    37AW
378          .          .       37AE
             .          .          V
             .          .          V
387          .          .      37AE1
             .          .          .
             .          .          .
394          .          .          .       CN6
             .          .          .         .
             .          .          .         .
405          .          .          .         .-------->    RET6
402          .          .          .       RET6
             .          .          .         .
             .          .          .         .
411          .          .          .         .          .<-------    37AW
408          .          .          .         .       37AW
             .          .          .         .          V
             .          .          .         .          V
412          .          .          .         .       CNC3
             .          .          .         .          V
             .          .          .         .          V
418          .          .          .         .       CNC4
             .          .          .         .          .
             .          .          .         .          .
425          .          .          .         .          .        CN1
             .          .          .         .          .          .
             .          .          .         .          .          .
```

```
435   .       .       .       .     CNC5............
      .       .       .       .       V
      .       .       .       .       V
438   .       .       .       .    DB1.1
      .       .       .       .       .
      .       .       .       .       .
445   .       .       .       .       .        CN2
      .       .       .       .       .         .
      .       .       .       .       .         .
452   .       .       .       .     DB1............
      .       .       .       .       V
      .       .       .       .       V
457   .       .       .       .    38R-1
      .       .       .       .       V
      .       .       .       .       V
465   .       .       .       .    DB2.1
      .       .       .       .       .
      .       .       .       .       .
472   .       .     DB3......................
      .       .       V
      .       .       V
477   .       .    CELL2
      .       .       .
      .       .       .
485   .       .       .     CN5C
      .       .       .       .
      .       .       .       .
493   .     C1I......................
      .       V
      .       V
498   .    CELL1
      .       .
      .       .
510   .       .     CN5A
      .       .       V
      .       .       V
519   .       .   5A-DET
      .       .       .
      .       .       .
525   .       .       .     CN5B
      .       .       .       V
      .       .       .       V
533   .       .       .   5B-DET
      .       .       .       .
      .       .       .       .
539   .       .     CN5............
      .       .       V
      .       .       V
543   .       .    38R-2
      .       .       .
      .       .       .
558   .       .       .     CN4
      .       .       .       .
      .       .       .       .
565   .       .       .       .     CN3
      .       .       .       .       V
      .       .       .       .       V
572   .       .       .       .     3-4
      .       .       .       .       .
      .       .       .       .       .
```

```
578          .          .          .          SCOTT............
             .          .          .            .
             .          .          .            .
581          .          .          .            .        33ACM
```

(***) RUNOFF ALSO COMPUTED AT THIS LOCATION

```
*****************************************
*                                       *
  FLOOD HYDROGRAPH PACKAGE  (HEC-1)     *
          MAY   1991                    *
        VERSION 4.0.1E                  *
                                        *
  RUN DATE  06/24/94  TIME  09:48:49    *
*                                       *
*****************************************
```

```
*****************************************
*                                       *
*    U.S. ARMY CORPS OF ENGINEERS       *
*    HYDROLOGIC ENGINEERING CENTER      *
*          609 SECOND STREET            *
*       DAVIS, CALIFORNIA 95616         *
*          (916) 551-1748               *
*                                       *
*****************************************
```

UPPER INDIAN BEND WASH REGIONAL FLOOD CONTROL & DRAINAGE PLAN
OUTER LOOP HIGHWAY AND CORE NORTH PROJECTS IN SCOTTSDALE

PRELIMINARY CONCEPT DESIGN ANALYSES JULY 23, 1992 ********PRELIMINARY
FINAL REVISION 9/14/92 BY CITY STAFF BASED ON ADOT REVIEW NOTES 8/6/92

UPPER INDIAN BEND WASH REGIONAL MODEL REVISED TO ACCOMMODATE PROJECT
PREPARED BY CITY OF SCOTTSDALE TRANSPORTATION PLANNING STAFF

NOTE:
FINAL ANALYSES IS A FUNCTION OF THE DESIGN PROCESS

```
*************************************************************************
*************************************************************************
*                                                                       *
MODEL OLP.24, MEETING ADOT 24HR OUTER-LOOP HIGHWAY REQUIREMENTS         *
*                                                                       *
REVISION TO UIBW MP9R.24I INCLUDING ALL MODIFICATIONS TO MODEL          *
AS OF SEPTEMBER 14, 1992                                                *
*                                                                       *
************** ALL VEGETATION DIVERSIONS REMOVED ********************** *
************** ALL OF CORE SOUTH SLA MODEL REMOVED ******************** *
***** ALL BASINS AND CHANNELS WEST OF SCOTTSDALE ROAD REMOVED ******** *
***** ALL BUREAU OF RECLAMATION DAMS REMOVED ***************************
*                                                                       *
SUB-BASIN 1470 ADDED TO RAWHIDE WASH AREA PER FIS92 FINDINGS            *
*                                                                       *
PRECIPITATION ADJUSTED TO ACCOMMODATE WATERSHEDS TRIBUTARY TO EACH      *
STORAGE BASIN, I.E. ARF IS BASED ON EACH STORAGE BASIN WATERSHED        *
*                                                                       *
ALL CHANNEL ROUTING IS NORMAL DEPTH/MODIFIED PULS WITH CONFIGURATION    *
TO ASSURE STABILITY AND ELIMINATE FDKRUT WARNING                        *
CHANNEL Z = 1 AND LOW FLOW Z = 0, PER CITY STAFF RECOMMENDATIONS        *
*                                                                       *
UPPER INDIAN BEND WASH REGIONAL MODEL DESCRIPTION AS LISTED BELOW       *
*************************************************************************
*                                                                       *
*************************************************************************
```

FROM UIBW 7/9/92 MODEL MP9R.24I -- SUB-BASIN SERIES 7B TO 53.1
BASE MODEL WAS MP9.24I MODIFIED TO REFLECT CITY OF SCOTTSDALE & G.W.
LARSONS & ASSC. CORE NORTH PLAN DATED JUNE 16, 1992
ADOT REVIEW COMMENTS INCLUDED IN SEPTEMBER 14, 1992 REVISION

THIS MODEL TO BE RUN USING HEC-1 VERSION 4.0, SEPT 1990 OR LATER

THIS IS AN INTEGRATED MASTER PLAN MODEL WITH A NORTH-SOUTH INTERCEPTOR CHANNEL IN-PLACE ALONG PIMA ROAD FROM POINT 3A TO 3K TO 3L.
ALL CORE NORTH-CORE SOUTH CHANNELS & DETENTION BASINS ARE IN-PLACE.
THE RAWHIDE WASH CHANNEL IS IN-PLACE ALONG ALIGNMENT 4A-4B-4D.
A NORTH-SOUTH INTERCEPTOR CHANNEL IS IN-PLACE ALONG SCOTTSDALE ROAD FROM POINT 4C TO 4B.

FUTURE CONDITION LAND-USE, WITH DEVELOPED CONDITION CHANNELIZATION
LOW-FLOW CULVERT DIVERSIONS ARE REMOVED
DETENTION BASINS 38R-1, 38R-2, & 53R HAVE BEEN MODIFIED TO REFLECT 6/16/92 STAGE/STORAGE/DISCHARGE CHANGES BY CITY OF SCOTTSDALE, AND SQ CARDS MODIFIED TO REFLECT SS & ST ASSUMPTIONS
CN5 & 33A HAVE BEEN MODIFIED TO REFLECT DRAINAGE SPLIT ON MARLEY PARCEL
SUB-BASIN 33ACM REFLECTS ONLY AREA WITHIN SCOTTSDALE

100% OF REATA PASS FAN IS DIVERTED SOUTH TO CAP DIKE 4.

THIS MODEL REFLECTS ALL D.A. ADJUSTMENTS MADE TO MODEL F3.24I AND FLOW DIVERSIONS NEAR RAWHIDE WASH APEX & PINNACLE PEAK.

FUTURE LAND-USE DENSITIES FROM OCT 1987 GENERAL PLAN, AND THE TONTO FOOTHILLS PLAN, ALL SCOTTSDALE RESIDENTIAL AREAS HAVE THE PERCENT OF IMPERVIOUS COVER ADJUSTED FOR NAOS REQUIREMENTS.

****

THIS MODEL HAS BEEN MODIFIED TO REFLECT GRAYHAWK DEVELOPMENT MOST RECENT INFORMATION AS FOLLOWS:

1. PIMA ROAD CHANNEL FROM DEER VALLEY RD. SOUTH TO REGIONAL DETENTION BASIN 53R IS CONSIDERED RECTANGULAR WITH CONCRETE-LINED WALLS AND SOIL CEMENT BOTTOM PER CITY'S STAFF.

2. SPLIT FLOW RATIO AT PROPOSED DEER VALLEY CHANNEL IS CHANGED DUE TO NEW PLAN IN GRAYHAWK'S VILLAGE 2. (SEE KK 37AE)

3. NO ON-SITE STORMWATER RETENTION IS ASSUMED ON GOLF COURSE SOUTH OF THOMPSON PEAK PARKWAY.(DESPITE THE FACT THAT SUCH RETENTION EXISTS)

4. DETENTION BASIN 38R1 IS RE-ROUTED TO DET. BASIN 53R ACCORDING TO NEW CITY'S DRAINAGE REGIONAL PLAN.

5. DETENTION BASIN 53R IS COMPOSED OF TWO CELLS (1 & 2)

6. DRAINAGE AREA (BA CARD) IS CHANGED FOR SUBBASIN CN1, CN2, CN3, CN4, CN5, AND CN6; ALONG WITH FLOW PATH LENGTHS.

7. TIME OF SIMULATION IS EXTENDED TO 48 HOURS TO BETTER EVALUATE DET. BASINS TOTAL DRAINING TIME.

```
*****************************************************************
*   LARGE ARRAY VERSION OF HEC-1 (MAY 1991)                     *
*                                                               *
*   100-YEAR; 24-HOUR STORM EVENT                               *
*                                                               *
*   FILE: OLFC24U.DAT                              JOB # 23019  *
*****************************************************************
```

```
109 IO          OUTPUT CONTROL VARIABLES
                      IPRNT           5  PRINT CONTROL
                      IPLOT           0  PLOT CONTROL
                      QSCAL          0.  HYDROGRAPH PLOT SCALE

    IT          HYDROGRAPH TIME DATA
                       NMIN           5  MINUTES IN COMPUTATION INTERVAL
                      IDATE     14SEP92  STARTING DATE
                      ITIME        0000  STARTING TIME
                         NQ         577  NUMBER OF HYDROGRAPH ORDINATES
                     NDDATE     16SEP92  ENDING DATE
                     NDTIME        0000  ENDING TIME
                     ICENT          19  CENTURY MARK

                 COMPUTATION INTERVAL    0.08 HOURS
                      TOTAL TIME BASE   48.00 HOURS

         ENGLISH UNITS
             DRAINAGE AREA          SQUARE MILES
             PRECIPITATION DEPTH    INCHES
             LENGTH, ELEVATION      FEET
             FLOW                   CUBIC FEET PER SECOND
             STORAGE VOLUME         ACRE-FEET
             SURFACE AREA           ACRES
             TEMPERATURE            DEGREES FAHRENHEIT


*** *** *** *** *** *** *** *** *** *** *** *** *** *** *** *** *** *** *** *** *** *** *** *** *** *** *** *** *** *** *** *** *** ***


          **************
          *            *
394 KK    *      CN6   *          SUB
          *            *
          **************

395 KO          OUTPUT CONTROL VARIABLES
                      IPRNT           3  PRINT CONTROL
                      IPLOT           0  PLOT CONTROL
                      QSCAL          0.  HYDROGRAPH PLOT SCALE
                              RUNOFF FROM SUB CN6 (REVISED: 5/1/90)(REVISED: 5/10/94)

             SUBBASIN RUNOFF DATA

397 BA          SUBBASIN CHARACTERISTICS
                      TAREA        1.25  SUBBASIN AREA

                PRECIPITATION DATA

113 PH                                 DEPTHS FOR   0-PERCENT HYPOTHETICAL STORM
                ..... HYDRO-35 ......   ............... TP-40 ...............   ........... TP-49 ...........
                5-MIN  15-MIN  60-MIN    2-HR    3-HR    6-HR   12-HR   24-HR   2-DAY   4-DAY   7-DAY  10-DAY
                 0.84    1.53    2.46    2.75    2.95    3.32    3.79    4.26    0.00    0.00    0.00    0.00

                                                   STORM AREA =    9.33

398 LS          SCS LOSS RATE
```

```
                STRTL        0.70  INITIAL ABSTRACTION
                CRVNBR      74.00  CURVE NUMBER
                RTIMP       40.30  PERCENT IMPERVIOUS AREA

            KINEMATIC WAVE
399 UK        OVERLAND-FLOW ELEMENT NO. 1
                  L         100.  OVERLAND FLOW LENGTH
                  S      0.0150  SLOPE
                  N       0.150  ROUGHNESS COEFFICIENT
                 PA       100.0  PERCENT OF SUBBASIN
              DXMIN           5  MINIMUM NUMBER OF DX INTERVALS

            KINEMATIC WAVE
400 RK        COLLECTOR CHANNEL
                  L       1400.  CHANNEL LENGTH
                  S      0.0100  SLOPE
                  N       0.018  CHANNEL ROUGHNESS COEFFICIENT
                 CA        0.19  CONTRIBUTING AREA
              SHAPE        TRAP  CHANNEL SHAPE
                 WD       30.00  BOTTOM WIDTH OR DIAMETER
                  Z        5.00  SIDE SLOPE
             NDXMIN           2  MINIMUM NUMBER OF DX INTERVALS
401 RK        MAIN CHANNEL
                  L       9000.  CHANNEL LENGTH
                  S      0.0070  SLOPE
                  N       0.045  CHANNEL ROUGHNESS COEFFICIENT
                 CA        1.25  CONTRIBUTING AREA
              SHAPE        TRAP  CHANNEL SHAPE
                 WD      100.00  BOTTOM WIDTH OR DIAMETER
                  Z       20.00  SIDE SLOPE
             NDXMIN           2  MINIMUM NUMBER OF DX INTERVALS
             RUPSTQ          NO  ROUTE UPSTREAM HYDROGRAPH

                                                  ***
                          COMPUTED KINEMATIC PARAMETERS
                               VARIABLE TIME STEP
                            (DT SHOWN IS A MINIMUM)

             ELEMENT    ALPHA       M        DT        DX      PEAK   TIME TO    VOLUME   MAXIMUM
                                                                       PEAK               CELERITY
                                         (MIN)      (FT)     (CFS)    (MIN)      (IN)     (FPS)

             PLANE1      1.22     1.67      1.01     20.00   4602.15   724.99      2.74      0.35
             COLLECTOR1  1.34     1.47      0.51    466.67   4362.24   726.01      2.74     15.59
             MAIN        0.26     1.46      4.86   1800.00   1829.50   747.49      2.74      6.32

CONTINUITY SUMMARY (AC-FT) - INFLOW=0.0000E+00  EXCESS=0.1834E+03 OUTFLOW=0.1829E+03 BASIN STORAGE=0.1734E-01 PERCENT ERROR=   0.3

                          INTERPOLATED TO SPECIFIED COMPUTATION INTERVAL

             MAIN        0.26     1.46      5.00            1828.64   745.00      2.73

   ***          ***          ***          ***          ***

                 HYDROGRAPH AT STATION      CN6

  TOTAL RAINFALL =    4.21, TOTAL LOSS =    1.47, TOTAL EXCESS =    2.74
```

PEAK FLOW (CFS)	TIME (HR)		MAXIMUM AVERAGE FLOW 6-HR	24-HR	72-HR	48.00-HR
1829.	12.42	(CFS)	292.	92.	46.	46.
		(INCHES)	2.164	2.715	2.733	2.733
		(AC-FT)	145.	182.	183.	183.

CUMULATIVE AREA = 1.25 SQ MI

*** ***

```
          **************
          *            *
402 KK    *      RET6  *
          *            *
          **************
```

403 KO OUTPUT CONTROL VARIABLES

IPRNT	3	PRINT CONTROL
IPLOT	0	PLOT CONTROL
QSCAL	0.	HYDROGRAPH PLOT SCALE

DIVERT OUT ON-SITE RETENTION VOLUME

DT DIVERSION

ISTAD	RET6	DIVERSION HYDROGRAPH IDENTIFICATION
DSTRMX	60.00	MAXIMUM VOLUME TO BE DIVERTED

DI	INFLOW	0.00	10000.00
DQ	DIVERTED FLOW	0.00	10000.00

***

*** *** *** *** ***

DIVERSION HYDROGRAPH RET6

PEAK FLOW (CFS)	TIME (HR)		MAXIMUM AVERAGE FLOW 6-HR	24-HR	72-HR	48.00-HR
1750.	12.33	(CFS)	113.	30.	15.	15.
		(INCHES)	0.841	0.897	0.897	0.897
		(AC-FT)	56.	60.	60.	60.

CUMULATIVE AREA = 1.25 SQ MI

*** *** *** *** ***

HYDROGRAPH AT STATION RET6

PEAK FLOW (CFS)	TIME (HR)		MAXIMUM AVERAGE FLOW 6-HR	24-HR	72-HR	48.00-HR
1686.	12.50	(CFS)	209.	62.	31.	31.
		(INCHES)	1.551	1.835	1.835	1.835
		(AC-FT)	104.	123.	123.	123.

```
                    CUMULATIVE AREA =    1.25 SQ MI

  -----DSS---ZOPEN:  Existing File Opened,  File: OLFC24U.DSS
                     Unit:  71;  DSS Version: 6-FT
-----DSS---ZWRITE Unit  71; Vers.   20:  /INFLOW/38R1/FLOW/13SEP1992/5MIN//
-----DSS---ZWRITE Unit  71; Vers.   20:  /INFLOW/38R1/FLOW/14SEP1992/5MIN//
-----DSS---ZWRITE Unit  71; Vers.   20:  /INFLOW/38R1/FLOW/15SEP1992/5MIN//
-----DSS---ZWRITE Unit  71; Vers.   20:  /OUTFLOW/38R1/FLOW/13SEP1992/5MIN//
-----DSS---ZWRITE Unit  71; Vers.   20:  /OUTFLOW/38R1/FLOW/14SEP1992/5MIN//
-----DSS---ZWRITE Unit  71; Vers.   20:  /OUTFLOW/38R1/FLOW/15SEP1992/5MIN//
-----DSS---ZWRITE Unit  71; Vers.   20:  /INFLOW/CELL2/FLOW/13SEP1992/5MIN//
-----DSS---ZWRITE Unit  71; Vers.   20:  /INFLOW/CELL2/FLOW/14SEP1992/5MIN//
-----DSS---ZWRITE Unit  71; Vers.   20:  /INFLOW/CELL2/FLOW/15SEP1992/5MIN//
-----DSS---ZWRITE Unit  71; Vers.   20:  /OUTFLOW/CELL2/FLOW/13SEP1992/5MIN//
-----DSS---ZWRITE Unit  71; Vers.   20:  /OUTFLOW/CELL2/FLOW/14SEP1992/5MIN//
-----DSS---ZWRITE Unit  71; Vers.   20:  /OUTFLOW/CELL2/FLOW/15SEP1992/5MIN//


*** *** *** *** *** *** *** *** *** *** *** *** *** *** *** *** *** *** *** *** *** *** *** *** *** *** *** *** *** *** *** *** *** *** *** ***


          **************
          *            *
485 KK    *     CN5C   *          SUB
          *            *
          **************

486 KO         OUTPUT CONTROL VARIABLES
                     IPRNT           3  PRINT CONTROL
                     IPLOT           0  PLOT CONTROL
                     QSCAL          0.  HYDROGRAPH PLOT SCALE
                             RUNOFF FROM SUB CN5C (REVISED 5/10/94)

               SUBBASIN RUNOFF DATA

488 BA         SUBBASIN CHARACTERISTICS
                     TAREA        0.28  SUBBASIN AREA

               PRECIPITATION DATA

113 PH                                 DEPTHS FOR   0-PERCENT HYPOTHETICAL STORM
               ..... HYDRO-35 ......   ............... TP-40 ...............   ........... TP-49 ...........
               5-MIN  15-MIN  60-MIN    2-HR    3-HR    6-HR   12-HR   24-HR   2-DAY   4-DAY   7-DAY  10-DAY
                0.84    1.53    2.46    2.75    2.95    3.32    3.79    4.26    0.00    0.00    0.00    0.00

                                                STORM AREA =    9.33

489 LS         SCS LOSS RATE
                     STRTL        0.70  INITIAL ABSTRACTION
                    CRVNBR       74.00  CURVE NUMBER
                     RTIMP        0.00  PERCENT IMPERVIOUS AREA

               KINEMATIC WAVE
490 UK           OVERLAND-FLOW ELEMENT NO. 1
                         L        100.  OVERLAND FLOW LENGTH
                         S      0.0150  SLOPE
                         N       0.150  ROUGHNESS COEFFICIENT
                        PA       100.0  PERCENT OF SUBBASIN
                     DXMIN          10  MINIMUM NUMBER OF DX INTERVALS
```

```
                KINEMATIC WAVE
491 RK            COLLECTOR CHANNEL
                        L        500.  CHANNEL LENGTH
                        S      0.0100  SLOPE
                        N       0.018  CHANNEL ROUGHNESS COEFFICIENT
                       CA        0.12  CONTRIBUTING AREA
                    SHAPE        TRAP  CHANNEL SHAPE
                       WD       30.00  BOTTOM WIDTH OR DIAMETER
                        Z        5.00  SIDE SLOPE
                   NDXMIN           2  MINIMUM NUMBER OF DX INTERVALS
492 RK            MAIN CHANNEL
                        L       3980.  CHANNEL LENGTH
                        S      0.0150  SLOPE
                        N       0.035  CHANNEL ROUGHNESS COEFFICIENT
                       CA        0.28  CONTRIBUTING AREA
                    SHAPE        TRAP  CHANNEL SHAPE
                       WD       50.00  BOTTOM WIDTH OR DIAMETER
                        Z        2.00  SIDE SLOPE
                   NDXMIN           2  MINIMUM NUMBER OF DX INTERVALS
                   RUPSTQ          NO  ROUTE UPSTREAM HYDROGRAPH

                                                   ***
                          COMPUTED KINEMATIC PARAMETERS
                               VARIABLE TIME STEP
                            (DT SHOWN IS A MINIMUM)

                ELEMENT    ALPHA      M        DT       DX      PEAK   TIME TO    VOLUME   MAXIMUM
                                                                        PEAK               CELERITY
                                             (MIN)     (FT)    (CFS)   (MIN)      (IN)     (FPS)

                PLANE1      1.22     1.67      0.64    10.00   649.44   725.42      1.75      0.28
                COLLECTOR1  1.34     1.47      0.29   166.67   646.25   726.30      1.75     11.94
                MAIN        0.50     1.58      2.04  1326.67   525.68   731.39      1.75     10.86

:ONTINUITY SUMMARY (AC-FT) - INFLOW=0.0000E+00  EXCESS=0.2654E+02 OUTFLOW=0.2644E+02 BASIN STORAGE=0.1962E-02 PERCENT ERROR=   0.4

                          INTERPOLATED TO SPECIFIED COMPUTATION INTERVAL

                MAIN        0.50     1.58      5.00            469.59   730.00      1.74

   ***          ***          ***          ***          ***

                  HYDROGRAPH AT STATION     CN5C

  TOTAL RAINFALL =    4.21, TOTAL LOSS =    2.46, TOTAL EXCESS =    1.75

PEAK FLOW    TIME                          MAXIMUM AVERAGE FLOW
  (CFS)      (HR)                  6-HR      24-HR      72-HR    48.00-HR
   470.     12.17        (CFS)      46.        13.         7.         7.
                       (INCHES)   1.502     1.741      1.742      1.742
                       (AC-FT)     23.        26.        26.        26.

                     CUMULATIVE AREA =    0.28 SQ MI
```

```
*** *** *** *** *** *** *** *** *** *** *** *** *** *** *** *** *** *** *** *** *** *** *** *** *** *** *** *** *** *** *** *** *** *** *** *** *** *** *** ***

              **************
              *            *
493 KK        *      C1I   *
              *            *
              **************

494 KO            OUTPUT CONTROL VARIABLES
                        IPRNT          3  PRINT CONTROL
                        IPLOT          0  PLOT CONTROL
                        QSCAL         0.  HYDROGRAPH PLOT SCALE
                                COMBINE OUTFLOW FROM CELL2 WITH INFLOW FROM PIMA RD. CHANNEL

496 HC            HYDROGRAPH COMBINATION
                        ICOMP          3  NUMBER OF HYDROGRAPHS TO COMBINE

                                                                  ***

     ***              ***              ***              ***              ***

                          HYDROGRAPH AT STATION      C1I

PEAK FLOW     TIME                          MAXIMUM AVERAGE FLOW
  (CFS)       (HR)                  6-HR       24-HR       72-HR     48.00-HR
   8343.      12.67       (CFS)     1862.       615.        312.        312.
                         (INCHES)   1.615      2.136       2.164       2.164
                         (AC-FT)    923.       1221.       1237.       1237.

                         CUMULATIVE AREA =   10.72 SQ MI

----DSS---ZWRITE Unit  71; Vers.   20:  /INFLOW/CELL1/FLOW/13SEP1992/5MIN//
-----DSS---ZWRITE Unit  71; Vers.   20:  /INFLOW/CELL1/FLOW/14SEP1992/5MIN//
----DSS---ZWRITE Unit  71; Vers.   20:  /INFLOW/CELL1/FLOW/15SEP1992/5MIN//


** *** *** *** *** *** *** *** *** *** *** *** *** *** *** *** *** *** *** *** *** *** *** *** *** *** *** *** *** *** *** *** *** *** *** *** *** *** *** ***

              **************
              *            *
498 KK        *     CELL1  *
              *            *
              **************

499 KO            OUTPUT CONTROL VARIABLES
                        IPRNT          3  PRINT CONTROL
                        IPLOT          0  PLOT CONTROL
                        QSCAL         0.  HYDROGRAPH PLOT SCALE
                              DETENTION BASIN LOCATED SOUTH OF THE WATER CAMPUS, 53R (CELL1)
                              DISCHARGE IS MODELED THROUGH 3-10'X10' RCB CULVERTS
                              INLET ELEV. AT 1592.00 FEET
                              OUTLET ELEV. AT 1590.50 FEET

                HYDROGRAPH ROUTING DATA

504 RS            STORAGE ROUTING
```

```
                    NSTPS          1  NUMBER OF SUBREACHES
                     ITYP       STOR  TYPE OF INITIAL CONDITION
                   RSVRIC       0.00  INITIAL CONDITION
                        X       0.00 WORKING R AND D COEFFICIENT

505 SV          STORAGE        0.0      49.8     101.6     155.5     211.4     269.4     329.5     391.6

506 SQ        DISCHARGE         0.      250.      500.      900.     1400.     1900.     2300.     2525.

507 SE        ELEVATION     1592.00   1594.00   1596.00   1598.00   1600.00   1602.00   1604.00   1606.00

508 ST        TOP OF DAM
                    TOPEL    1606.00  ELEVATION AT TOP OF DAM
                   DAMWID     800.00  DAM WIDTH
                     COQD       2.90  WEIR COEFFICIENT
                     EXPD       1.50  EXPONENT OF HEAD

                                                          ***

    ***            ***            ***            ***            ***

                     HYDROGRAPH AT STATION    CELL1

PEAK OUTFLOW IS     2507. AT TIME  13.50 HOURS

PEAK FLOW    TIME                          MAXIMUM AVERAGE FLOW
  (CFS)      (HR)                  6-HR       24-HR       72-HR     48.00-HR
   2507.     13.50       (CFS)     1636.       613.        312.        312.
                       (INCHES)    1.420      2.126       2.164       2.164
                        (AC-FT)    811.       1215.       1237.       1237.

PEAK STORAGE  TIME                         MAXIMUM AVERAGE STORAGE
 (AC-FT)      (HR)                  6-HR       24-HR       72-HR     48.00-HR
    387.      13.50                 249.        102.         52.         52.

PEAK STAGE    TIME                         MAXIMUM AVERAGE STAGE
  (FEET)      (HR)                  6-HR       24-HR       72-HR     48.00-HR
 1605.84      13.50               1601.22     1595.89     1593.99     1593.99

                     CUMULATIVE AREA =   10.72 SQ MI

----DSS---ZWRITE Unit  71; Vers.   20:  /OUTFLOW/CELL1/FLOW/13SEP1992/5MIN//
----DSS---ZWRITE Unit  71; Vers.   20:  /OUTFLOW/CELL1/FLOW/14SEP1992/5MIN//
-----DSS---ZWRITE Unit  71; Vers.   20:  /OUTFLOW/CELL1/FLOW/15SEP1992/5MIN//

*** *** *** *** *** *** *** *** *** *** *** *** *** *** *** *** *** *** *** *** *** *** *** *** *** *** *** *** *** *** *** *** *** *** *** ***

          **************
          *            *
510 KK    *     CN5A   *          SUB
          *            *
          **************

511 KO          OUTPUT CONTROL VARIABLES
                     IPRNT          3  PRINT CONTROL
                     IPLOT          0  PLOT CONTROL
```

```
        QSCAL          0.  HYDROGRAPH PLOT SCALE
                 RUNOFF FROM SUB CN5A (REVISED 5/10/94)
                 D.A. MODIFIED TO REFLECT SPLIT IN CORRIGAN-MARLEY PARCEL

SUBBASIN RUNOFF DATA

514 BA    SUBBASIN CHARACTERISTICS
            TAREA        0.35  SUBBASIN AREA

          PRECIPITATION DATA

113 PH                          DEPTHS FOR   0-PERCENT HYPOTHETICAL STORM
          ..... HYDRO-35 .....  ............... TP-40 ...............  ........... TP-49 ...........
          5-MIN  15-MIN  60-MIN   2-HR   3-HR   6-HR  12-HR  24-HR  2-DAY  4-DAY  7-DAY 10-DAY
           0.84   1.53   2.46   2.75   2.95   3.32   3.79   4.26   0.00   0.00   0.00   0.00

                                        STORM AREA =    9.33

515 LS    SCS LOSS RATE
            STRTL        0.70  INITIAL ABSTRACTION
           CRVNBR       74.00  CURVE NUMBER
            RTIMP        0.00  PERCENT IMPERVIOUS AREA

          KINEMATIC WAVE
516 UK      OVERLAND-FLOW ELEMENT NO. 1
                L        100.  OVERLAND FLOW LENGTH
                S      0.0150  SLOPE
                N       0.150  ROUGHNESS COEFFICIENT
               PA       100.0  PERCENT OF SUBBASIN
            DXMIN           5  MINIMUM NUMBER OF DX INTERVALS

          KINEMATIC WAVE
517 RK      COLLECTOR CHANNEL
                L        550.  CHANNEL LENGTH
                S      0.0100  SLOPE
                N       0.018  CHANNEL ROUGHNESS COEFFICIENT
               CA        0.12  CONTRIBUTING AREA
            SHAPE        TRAP  CHANNEL SHAPE
               WD       30.00  BOTTOM WIDTH OR DIAMETER
                Z        5.00  SIDE SLOPE
           NDXMIN           2  MINIMUM NUMBER OF DX INTERVALS
518 RK      MAIN CHANNEL
                L       5300.  CHANNEL LENGTH
                S      0.0150  SLOPE
                N       0.035  CHANNEL ROUGHNESS COEFFICIENT
               CA        0.35  CONTRIBUTING AREA
            SHAPE        TRAP  CHANNEL SHAPE
               WD       50.00  BOTTOM WIDTH OR DIAMETER
                Z        2.00  SIDE SLOPE
           NDXMIN           2  MINIMUM NUMBER OF DX INTERVALS
           RUPSTQ          NO  ROUTE UPSTREAM HYDROGRAPH

                                          ***
                        COMPUTED KINEMATIC PARAMETERS
                             VARIABLE TIME STEP
                           (DT SHOWN IS A MINIMUM)

          ELEMENT    ALPHA       M        DT        DX      PEAK   TIME TO    VOLUME   MAXIMUM
                                                                     PEAK               CELERITY
                                          (MIN)     (FT)    (CFS)    (MIN)     (IN)     (FPS)
```

PLANE1	1.22	1.67	1.17	20.00	810.64	725.77	1.75	0.29
COLLECTOR1	1.34	1.47	0.39	183.33	797.66	726.74	1.75	12.11
MAIN	0.50	1.58	2.75	1766.67	578.79	732.50	1.74	11.31

CONTINUITY SUMMARY (AC-FT) - INFLOW=0.0000E+00 EXCESS=0.3308E+02 OUTFLOW=0.3289E+02 BASIN STORAGE=0.3630E-02 PERCENT ERROR= 0.6

INTERPOLATED TO SPECIFIED COMPUTATION INTERVAL

MAIN	0.50	1.58	5.00	564.07	735.00	1.75

*** *** *** *** ***

HYDROGRAPH AT STATION CN5A

TOTAL RAINFALL = 4.21, TOTAL LOSS = 2.46, TOTAL EXCESS = 1.75

PEAK FLOW (CFS)	TIME (HR)		MAXIMUM AVERAGE FLOW 6-HR	24-HR	72-HR	48.00-HR
564.	12.25	(CFS)	57.	17.	8.	8.
		(INCHES)	1.503	1.746	1.747	1.747
		(AC-FT)	28.	33.	33.	33.

CUMULATIVE AREA = 0.35 SQ MI

*** ***

```
              **************
              *            *
525 KK        *     CN5B   *          SUB
              *            *
              **************
```

526 KO OUTPUT CONTROL VARIABLES

IPRNT	3	PRINT CONTROL
IPLOT	0	PLOT CONTROL
QSCAL	0.	HYDROGRAPH PLOT SCALE

RUNOFF FROM SUB CN5B (REVISED 5/10/94)

SUBBASIN RUNOFF DATA

528 BA SUBBASIN CHARACTERISTICS

TAREA	0.50	SUBBASIN AREA

PRECIPITATION DATA

113 PH DEPTHS FOR 0-PERCENT HYPOTHETICAL STORM

..... HYDRO-35			..... TP-40					..... TP-49			
5-MIN	15-MIN	60-MIN	2-HR	3-HR	6-HR	12-HR	24-HR	2-DAY	4-DAY	7-DAY	10-DAY
0.84	1.53	2.46	2.75	2.95	3.32	3.79	4.26	0.00	0.00	0.00	0.00

STORM AREA = 9.33

```
529 LS          SCS LOSS RATE
                     STRTL        0.70  INITIAL ABSTRACTION
                    CRVNBR       74.00  CURVE NUMBER
                     RTIMP        0.00  PERCENT IMPERVIOUS AREA

                KINEMATIC WAVE
530 UK            OVERLAND-FLOW ELEMENT NO. 1
                         L        100.  OVERLAND FLOW LENGTH
                         S      0.0150  SLOPE
                         N       0.150  ROUGHNESS COEFFICIENT
                        PA       100.0  PERCENT OF SUBBASIN
                     DXMIN           5  MINIMUM NUMBER OF DX INTERVALS

                KINEMATIC WAVE
531 RK            COLLECTOR CHANNEL
                         L        600.  CHANNEL LENGTH
                         S      0.0100  SLOPE
                         N       0.018  CHANNEL ROUGHNESS COEFFICIENT
                        CA        0.12  CONTRIBUTING AREA
                     SHAPE        TRAP  CHANNEL SHAPE
                        WD       30.00  BOTTOM WIDTH OR DIAMETER
                         Z        5.00  SIDE SLOPE
                    NDXMIN           2  MINIMUM NUMBER OF DX INTERVALS
532 RK            MAIN CHANNEL
                         L       4200.  CHANNEL LENGTH
                         S      0.0150  SLOPE
                         N       0.035  CHANNEL ROUGHNESS COEFFICIENT
                        CA        0.50  CONTRIBUTING AREA
                     SHAPE        TRAP  CHANNEL SHAPE
                        WD       50.00  BOTTOM WIDTH OR DIAMETER
                         Z        2.00  SIDE SLOPE
                    NDXMIN           2  MINIMUM NUMBER OF DX INTERVALS
                    RUPSTQ          NO  ROUTE UPSTREAM HYDROGRAPH

                                                  ***
                              COMPUTED KINEMATIC PARAMETERS
                                   VARIABLE TIME STEP
                                (DT SHOWN IS A MINIMUM)

                 ELEMENT    ALPHA       M        DT        DX      PEAK   TIME TO    VOLUME   MAXIMUM
                                                                          PEAK               CELERITY
                                                (MIN)      (FT)    (CFS)   (MIN)      (IN)     (FPS)

                PLANE1       1.22     1.67      1.17     20.00  1150.00   725.77      1.75      0.29
                COLLECTOR1   1.34     1.47      0.32    200.00  1133.67   726.93      1.75     11.78
                MAIN         0.50     1.58      1.74   1400.00   968.28   730.66      1.75     13.72

CONTINUITY SUMMARY (AC-FT) - INFLOW=0.0000E+00  EXCESS=0.4692E+02 OUTFLOW=0.4676E+02 BASIN STORAGE=0.2768E-02 PERCENT ERROR=   0.3

                              INTERPOLATED TO SPECIFIED COMPUTATION INTERVAL

                MAIN         0.50     1.58      5.00            925.66   730.00      1.74

   ***            ***            ***            ***            ***

                    HYDROGRAPH AT STATION     CN5B
```

```
    TOTAL RAINFALL =    4.21, TOTAL LOSS =    2.46, TOTAL EXCESS =    1.75

 PEAK FLOW     TIME                          MAXIMUM AVERAGE FLOW
   (CFS)       (HR)                  6-HR       24-HR       72-HR     48.00-HR
     926.      12.17       (CFS)      81.         24.         12.         12.
                         (INCHES)   1.507       1.743       1.743       1.743
                          (AC-FT)    40.         47.         47.         47.

                         CUMULATIVE AREA =    0.50 SQ MI


 WARNING --- ROUTED OUTFLOW (    407.) IS GREATER THAN MAXIMUM OUTFLOW (    319.) IN STORAGE-OUTFLOW TABLE

 WARNING --- ROUTED OUTFLOW (    647.) IS GREATER THAN MAXIMUM OUTFLOW (    319.) IN STORAGE-OUTFLOW TABLE

 WARNING --- ROUTED OUTFLOW (    646.) IS GREATER THAN MAXIMUM OUTFLOW (    319.) IN STORAGE-OUTFLOW TABLE

 WARNING --- ROUTED OUTFLOW (    537.) IS GREATER THAN MAXIMUM OUTFLOW (    319.) IN STORAGE-OUTFLOW TABLE

 WARNING --- ROUTED OUTFLOW (    425.) IS GREATER THAN MAXIMUM OUTFLOW (    319.) IN STORAGE-OUTFLOW TABLE

 WARNING --- ROUTED OUTFLOW (    336.) IS GREATER THAN MAXIMUM OUTFLOW (    319.) IN STORAGE-OUTFLOW TABLE
-----DSS---ZWRITE Unit  71; Vers.   21:  /INFLOW/38R2/FLOW/13SEP1992/5MIN//
-----DSS---ZWRITE Unit  71; Vers.   21:  /INFLOW/38R2/FLOW/14SEP1992/5MIN//
-----DSS---ZWRITE Unit  71; Vers.   21:  /INFLOW/38R2/FLOW/15SEP1992/5MIN//


*** *** *** *** *** *** *** *** *** *** *** *** *** *** *** *** *** *** *** *** *** *** *** *** *** *** *** *** *** *** *** *** *** *** *** *** ***


          **************
          *            *
 543 KK   *    38R-2   *          DAM
          *            *
          **************

 544 KO          OUTPUT CONTROL VARIABLES
                      IPRNT          3  PRINT CONTROL
                      IPLOT          0  PLOT CONTROL
                      QSCAL         0.  HYDROGRAPH PLOT SCALE
                              PERFORM RESERVOIR ROUTING OPERATION FOR DETENTION BASIN No.2 (38R-2)
                              USE RESERVOIR DATA PROVIDED BY CITY OF SCOTTSDALE
                              OUTLET = 1-10wX6h CBC
                              CORE SOUTH ROUTES REMOVED FROM THIS MODEL CORE SOUTH CHANNEL SYSTEM.

             HYDROGRAPH ROUTING DATA

 548 RS          STORAGE ROUTING
                      NSTPS          1  NUMBER OF SUBREACHES
                       ITYP       STOR  TYPE OF INITIAL CONDITION
                     RSVRIC       0.00  INITIAL CONDITION
                          X       0.00 WORKING R AND D COEFFICIENT

 549 SV            STORAGE        0.0       0.1       1.0       3.2       6.9      11.8      17.7      24.7      32.6      41.4
                                 51.1      62.2

 551 SQ          DISCHARGE         0.       50.       80.      150.      240.      330.      410.      500.      600.      660.
                                 721.      809.
```

```
553 SE          ELEVATION     1595.00   1596.00   1597.00   1598.00   1599.00   1600.00   1601.00   1602.00   1603.00   1604.00
                              1605.00   1606.00

555 ST          TOP OF DAM
                      TOPEL     1606.00  ELEVATION AT TOP OF DAM
                     DAMWID      750.00  DAM WIDTH
                       COQD        2.90  WEIR COEFFICIENT
                       EXPD        1.50  EXPONENT OF HEAD

                                                          ***

     ***             ***             ***             ***             ***

                        HYDROGRAPH AT STATION    38R-2

PEAK OUTFLOW IS      457. AT TIME  12.67 HOURS


 PEAK FLOW     TIME                          MAXIMUM AVERAGE FLOW
  (CFS)        (HR)                  6-HR       24-HR       72-HR     48.00-HR
   457.       12.67        (CFS)     138.         40.         20.          20.
                         (INCHES)   1.497       1.745       1.745        1.745
                          (AC-FT)     68.         80.         80.          80.

 PEAK STORAGE   TIME                         MAXIMUM AVERAGE STORAGE
  (AC-FT)       (HR)                  6-HR       24-HR       72-HR     48.00-HR
    21.        12.67                    4.          1.          1.           1.

 PEAK STAGE     TIME                         MAXIMUM AVERAGE STAGE
  (FEET)        (HR)                  6-HR       24-HR       72-HR     48.00-HR
 1601.52       12.67               1597.33     1595.69     1595.35      1595.35

                        CUMULATIVE AREA =    0.86 SQ MI

-----DSS---ZWRITE Unit  71; Vers.   19:  /OUTFLOW/38R2/FLOW/13SEP1992/5MIN//
-----DSS---ZWRITE Unit  71; Vers.   19:  /OUTFLOW/38R2/FLOW/14SEP1992/5MIN//
-----DSS---ZWRITE Unit  71; Vers.   19:  /OUTFLOW/38R2/FLOW/15SEP1992/5MIN//

WARNING --- ROUTED OUTFLOW (    728.) IS GREATER THAN MAXIMUM OUTFLOW (    697.) IN STORAGE-OUTFLOW TABLE
```

RUNOFF SUMMARY
FLOW IN CUBIC FEET PER SECOND
TIME IN HOURS, AREA IN SQUARE MILES

OPERATION	STATION	PEAK FLOW	TIME OF PEAK	AVERAGE FLOW FOR MAXIMUM PERIOD 6-HOUR	24-HOUR	72-HOUR	BASIN AREA	MAXIMUM STAGE	TIME OF MAX STAGE
HYDROGRAPH AT	31B	1141.	12.42	184.	55.	28.	0.99		
HYDROGRAPH AT	36L2	328.	12.25	34.	10.	5.	0.17		
2 COMBINED AT	32.1	1320.	12.33	218.	66.	33.	1.16		
ROUTED TO	32.3	1209.	12.58	217.	66.	33.	1.16	2.62	12.58
HYDROGRAPH AT	32A	1112.	12.33	172.	52.	26.	0.87		
2 COMBINED AT	32A3	2206.	12.42	388.	118.	59.	2.04		
HYDROGRAPH AT	30R	2158.	12.33	301.	88.	44.	1.31		
ROUTED TO	DD	2032.	12.42	300.	88.	44.	1.31	3.55	12.42
HYDROGRAPH AT	31A	694.	12.25	68.	21.	10.	0.41		
HYDROGRAPH AT	34R	1205.	12.25	129.	38.	19.	0.64		
ROUTED TO	31.3	1066.	12.33	128.	38.	19.	0.64	2.35	12.33
3 COMBINED AT	31.2	3388.	12.42	497.	147.	74.	2.37		
ROUTED TO	CC	3204.	12.50	495.	147.	74.	2.37	3.18	12.50
HYDROGRAPH AT	35N	1198.	12.17	118.	36.	18.	0.46		
DIVERSION TO	35N1	479.	12.17	47.	14.	7.	0.46		
HYDROGRAPH AT	35N2	719.	12.17	71.	22.	11.	0.46		
ROUTED TO	35L1	588.	12.33	71.	22.	11.	0.46	1.45	12.33
HYDROGRAPH AT	35L	903.	12.42	136.	41.	20.	0.65		
2 COMBINED AT	35L2	1457.	12.42	207.	62.	31.	1.11		
ROUTED TO	36LA	1329.	12.50	207.	62.	31.	1.11	2.59	12.50
HYDROGRAPH AT	36L1	618.	12.25	70.	21.	10.	0.41		
2 COMBINED AT	CB	1678.	12.42	277.	83.	42.	1.52		
ROUTED TO	36.3	1650.	12.50	276.	83.	42.	1.52	2.20	12.50
2 COMBINED AT	36.4	4853.	12.50	772.	229.	115.	3.89		
ROUTED TO	BB	4876.	12.50	771.	229.	115.	3.89	4.00	12.50
HYDROGRAPH AT	35N1	479.	12.17	47.	14.	7.	0.00		

ROUTED TO	35R1	389.	12.33	47.	14.	7.	0.00	1.80	12.33
HYDROGRAPH AT	35R	519.	12.42	81.	24.	12.	0.41		
2 COMBINED AT	CB35R	890.	12.42	128.	39.	19.	0.41		
ROUTED TO	36R1R	819.	12.50	128.	39.	19.	0.41	1.84	12.50
HYDROGRAPH AT	36R1	973.	12.33	125.	38.	19.	0.67		
3 COMBINED AT	36.8	6280.	12.50	1022.	306.	154.	4.97		
ROUTED TO	AA	6042.	12.58	1020.	306.	154.	4.97	4.50	12.58
HYDROGRAPH AT	37B	353.	12.08	21.	6.	3.	0.11		
ROUTED TO	37.2	229.	12.17	21.	6.	3.	0.11	0.65	12.17
2 COMBINED AT	37.3	6105.	12.58	1040.	312.	157.	5.08		
ROUTED TO	A	6003.	12.58	1039.	312.	157.	5.08	5.24	12.58
HYDROGRAPH AT	SUB49	911.	12.17	74.	22.	11.	0.35		
ROUTED TO	49.2	636.	12.33	73.	22.	11.	0.35	1.59	12.33
HYDROGRAPH AT	SUB51	950.	12.50	173.	53.	27.	1.02		
2 COMBINED AT	51.1	1508.	12.33	246.	74.	37.	1.37		
ROUTED TO	51.2	1417.	12.50	246.	74.	37.	1.37	2.61	12.50
HYDROGRAPH AT	52A	917.	12.50	182.	56.	28.	1.05		
3 COMBINED AT	52.2	8202.	12.58	1464.	442.	222.	7.51		
ROUTED TO	B	8017.	12.67	1461.	442.	222.	7.51	6.79	12.67
HYDROGRAPH AT	53A	638.	12.17	65.	20.	10.	0.33		
2 COMBINED AT	53A1	8153.	12.67	1522.	462.	232.	7.84		
ROUTED TO	DB3.1	8064.	12.67	1521.	462.	232.	7.84	6.81	12.67
HYDROGRAPH AT	37A	1258.	12.25	139.	43.	21.	0.68		
DIVERSION TO	37AW	881.	12.25	98.	30.	15.	0.68		
HYDROGRAPH AT	37AE	378.	12.25	42.	13.	6.	0.68		
ROUTED TO	37AE1	278.	12.50	42.	13.	6.	0.68	1.80	12.50
HYDROGRAPH AT	CN6	1829.	12.42	292.	92.	46.	1.25		
DIVERSION TO	RET6	1750.	12.50	113.	30.	15.	1.25		
HYDROGRAPH AT	RET6	1686.	12.50	209.	62.	31.	1.25		
HYDROGRAPH AT	37AW	881.	12.25	98.	30.	15.	0.00		

ROUTED TO	CNC3	768.	12.33	97.	30.	15.	0.00	2.36	12.33
ROUTED TO	CNC4	545.	12.50	97.	30.	15.	0.00	1.29	12.50
HYDROGRAPH AT	CN1	825.	12.33	116.	36.	18.	0.58		
2 COMBINED AT	CNC5	1317.	12.42	213.	66.	33.	0.58		
ROUTED TO	DB1.1	1303.	12.42	213.	66.	33.	0.58	2.99	12.42
HYDROGRAPH AT	CN2	157.	12.25	18.	6.	3.	0.09		
2 COMBINED AT	DB1	1407.	12.42	231.	71.	36.	0.66		
ROUTED TO	38R-1	523.	12.92	225.	71.	36.	0.66	3.74	12.92
ROUTED TO	DB2.1	507.	13.17	224.	71.	36.	0.66	1745.46	13.17
3 COMBINED AT	DB3	2142.	12.50	474.	145.	73.	2.59		
ROUTED TO	CELL2	354.	14.83	321.	143.	73.	2.59	1619.97	14.83
HYDROGRAPH AT	CN5C	470.	12.17	46.	13.	7.	0.28		
3 COMBINED AT	C1I	8343.	12.67	1862.	615.	312.	10.72		
ROUTED TO	CELL1	2507.	13.50	1636.	613.	312.	10.72	1605.84	13.50
HYDROGRAPH AT	CN5A	564.	12.25	57.	17.	8.	0.35		
ROUTED TO	5A-DET	471.	12.33	57.	17.	8.	0.35	3.84	12.33
HYDROGRAPH AT	CN5B	926.	12.17	81.	24.	12.	0.50		
ROUTED TO	5B-DET	647.	12.25	81.	24.	12.	0.50	4.98	12.25
2 COMBINED AT	CN5	1117.	12.33	138.	40.	20.	0.86		
ROUTED TO	38R-2	457.	12.67	138.	40.	20.	0.86	1601.52	12.67
HYDROGRAPH AT	CN4	1599.	12.17	139.	44.	22.	0.55		
HYDROGRAPH AT	CN3	891.	12.17	71.	22.	11.	0.28		
ROUTED TO	3-4	728.	12.25	71.	22.	11.	0.28	3.07	12.25
2 COMBINED AT	SCOTT	2193.	12.17	210.	66.	33.	0.84		
HYDROGRAPH AT	33ACM	588.	12.17	63.	20.	10.	0.24		

SUMMARY OF KINEMATIC WAVE - MUSKINGUM-CUNGE ROUTING
(FLOW IS DIRECT RUNOFF WITHOUT BASE FLOW)

ISTAQ	ELEMENT	DT (MIN)	PEAK (CFS)	TIME TO PEAK (MIN)	VOLUME (IN)	INTERPOLATED TO COMPUTATION INTERVAL DT (MIN)	PEAK (CFS)	TIME TO PEAK (MIN)	VOLUME (IN)
31B	MANE	3.93	1150.43	747.47	2.09	5.00	1141.37	745.00	2.09

CONTINUITY SUMMARY (AC-FT) - INFLOW=0.0000E+00 EXCESS=0.1104E+03 OUTFLOW=0.1102E+03 BASIN STORAGE=0.4412E-02 PERCENT ERROR= 0.2

36L2	MANE	3.80	335.01	731.23	2.20	5.00	327.64	735.00	2.21

CONTINUITY SUMMARY (AC-FT) - INFLOW=0.0000E+00 EXCESS=0.2041E+02 OUTFLOW=0.2037E+02 BASIN STORAGE=0.5887E-03 PERCENT ERROR= 0.2

32A	MANE	5.00	1135.66	742.38	2.24	5.00	1111.66	740.00	2.24

CONTINUITY SUMMARY (AC-FT) - INFLOW=0.0000E+00 EXCESS=0.1046E+03 OUTFLOW=0.1044E+03 BASIN STORAGE=0.2317E-02 PERCENT ERROR= 0.2

30R	MANE	4.44	2159.45	739.88	2.50	5.00	2158.20	740.00	2.50

CONTINUITY SUMMARY (AC-FT) - INFLOW=0.0000E+00 EXCESS=0.1750E+03 OUTFLOW=0.1746E+03 BASIN STORAGE=0.9341E-02 PERCENT ERROR= 0.2

31A	MANE	2.32	711.26	733.67	1.88	5.00	693.56	735.00	1.88

CONTINUITY SUMMARY (AC-FT) - INFLOW=0.0000E+00 EXCESS=0.4148E+02 OUTFLOW=0.4136E+02 BASIN STORAGE=0.2287E-02 PERCENT ERROR= 0.3

34R	MANE	4.29	1211.15	734.85	2.19	5.00	1204.70	735.00	2.20

CONTINUITY SUMMARY (AC-FT) - INFLOW=0.0000E+00 EXCESS=0.7528E+02 OUTFLOW=0.7511E+02 BASIN STORAGE=0.3691E-02 PERCENT ERROR= 0.2

35N	MANE	2.03	1248.21	730.84	2.96	5.00	1198.47	730.00	2.96

CONTINUITY SUMMARY (AC-FT) - INFLOW=0.0000E+00 EXCESS=0.7213E+02 OUTFLOW=0.7199E+02 BASIN STORAGE=0.9644E-02 PERCENT ERROR= 0.2

35L	MANE	4.50	906.91	745.33	2.32	5.00	902.69	745.00	2.32

CONTINUITY SUMMARY (AC-FT) - INFLOW=0.0000E+00 EXCESS=0.8100E+02 OUTFLOW=0.8073E+02 BASIN STORAGE=0.1429E-01 PERCENT ERROR= 0.3

36L1	MANE	3.01	619.85	735.11	1.86	5.00	617.83	735.00	1.86

CONTINUITY SUMMARY (AC-FT) - INFLOW=0.0000E+00 EXCESS=0.4096E+02 OUTFLOW=0.4088E+02 BASIN STORAGE=0.1555E-02 PERCENT ERROR= 0.2

35R	MANE	4.52	526.28	745.82	2.20	5.00	518.57	745.00	2.20

CONTINUITY SUMMARY (AC-FT) - INFLOW=0.0000E+00 EXCESS=0.4827E+02 OUTFLOW=0.4805E+02 BASIN STORAGE=0.9292E-02 PERCENT ERROR= 0.4

36R1	MANE	3.62	1000.21	738.96	2.11	5.00	972.91	740.00	2.11

CONTINUITY SUMMARY (AC-FT) - INFLOW=0.0000E+00 EXCESS=0.7602E+02 OUTFLOW=0.7590E+02 BASIN STORAGE=0.2709E-02 PERCENT ERROR= 0.2

37B	MANE	0.81	365.11	725.68	2.07	5.00	353.36	725.00	2.08

CONTINUITY SUMMARY (AC-FT) - INFLOW=0.0000E+00 EXCESS=0.1267E+02 OUTFLOW=0.1267E+02 BASIN STORAGE=0.1497E-03 PERCENT ERROR= 0.0

SUB49	MANE	1.94	932.35	728.77	2.27	5.00	911.10	730.00	2.27

CONTINUITY SUMMARY (AC-FT) - INFLOW=0.0000E+00 EXCESS=0.4287E+02 OUTFLOW=0.4279E+02 BASIN STORAGE=0.2214E-02 PERCENT ERROR= 0.2

SUB51	MANE	5.00	957.08	749.77	1.93	5.00	949.58	750.00	1.93

CONTINUITY SUMMARY (AC-FT) - INFLOW=0.0000E+00 EXCESS=0.1056E+03 OUTFLOW=0.1050E+03 BASIN STORAGE=0.8669E-01 PERCENT ERROR= 0.5

52A	MANE	5.00	916.91	749.97	2.00	5.00	916.63	750.00	2.01

CONTINUITY SUMMARY (AC-FT) - INFLOW=0.0000E+00 EXCESS=0.1124E+03 OUTFLOW=0.1118E+03 BASIN STORAGE=0.1137E+00 PERCENT ERROR= 0.4

53A	MANE	3.86	651.55	733.74	2.19	5.00	638.19	730.00	2.20

CONTINUITY SUMMARY (AC-FT) - INFLOW=0.0000E+00 EXCESS=0.3896E+02 OUTFLOW=0.3891E+02 BASIN STORAGE=0.5820E-03 PERCENT ERROR= 0.1

37A	MANE	4.56	1319.81	733.86	2.36	5.00	1258.39	735.00	2.36

CONTINUITY SUMMARY (AC-FT) - INFLOW=0.0000E+00 EXCESS=0.8520E+02 OUTFLOW=0.8502E+02 BASIN STORAGE=0.1120E-02 PERCENT ERROR= 0.2

CN6	MANE	4.86	1829.50	747.49	2.74	5.00	1828.64	745.00	2.73

CONTINUITY SUMMARY (AC-FT) - INFLOW=0.0000E+00 EXCESS=0.1834E+03 OUTFLOW=0.1829E+03 BASIN STORAGE=0.1734E-01 PERCENT ERROR= 0.3

CN1	MANE	4.62	844.27	741.06	2.30	5.00	825.37	740.00	2.30

CONTINUITY SUMMARY (AC-FT) - INFLOW=0.0000E+00 EXCESS=0.7129E+02 OUTFLOW=0.7104E+02 BASIN STORAGE=0.5493E-02 PERCENT ERROR= 0.4

CN2	MANE	4.01	161.08	736.83	2.43	5.00	156.68	735.00	2.43

CONTINUITY SUMMARY (AC-FT) - INFLOW=0.0000E+00 EXCESS=0.1122E+02 OUTFLOW=0.1117E+02 BASIN STORAGE=0.1273E-02 PERCENT ERROR= 0.4

CN5C	MANE	2.04	525.68	731.39	1.75	5.00	469.59	730.00	1.74

CONTINUITY SUMMARY (AC-FT) - INFLOW=0.0000E+00 EXCESS=0.2654E+02 OUTFLOW=0.2644E+02 BASIN STORAGE=0.1962E-02 PERCENT ERROR= 0.4

CN5A	MANE	2.75	578.79	732.50	1.74	5.00	564.07	735.00	1.75

CONTINUITY SUMMARY (AC-FT) - INFLOW=0.0000E+00 EXCESS=0.3308E+02 OUTFLOW=0.3289E+02 BASIN STORAGE=0.3630E-02 PERCENT ERROR= 0.6

CN5B	MANE	1.74	968.28	730.66	1.75	5.00	925.66	730.00	1.74

CONTINUITY SUMMARY (AC-FT) - INFLOW=0.0000E+00 EXCESS=0.4692E+02 OUTFLOW=0.4676E+02 BASIN STORAGE=0.2768E-02 PERCENT ERROR= 0.3

CN4	MANE	2.09	1599.37	729.91	2.95	5.00	1599.21	730.00	2.96

CONTINUITY SUMMARY (AC-FT) - INFLOW=0.0000E+00 EXCESS=0.8737E+02 OUTFLOW=0.8736E+02 BASIN STORAGE=0.5067E-02 PERCENT ERROR= 0.0

CN3	MANE	1.46	893.29	730.30	2.92	5.00	891.45	730.00	2.93

CONTINUITY SUMMARY (AC-FT) - INFLOW=0.0000E+00 EXCESS=0.4440E+02 OUTFLOW=0.4440E+02 BASIN STORAGE=0.1573E-02 PERCENT ERROR= 0.0

33ACM	MANE	4.06	623.00	732.59	3.17	5.00	588.40	730.00	3.15

CONTINUITY SUMMARY (AC-FT) - INFLOW=0.0000E+00 EXCESS=0.4002E+02 OUTFLOW=0.3996E+02 BASIN STORAGE=0.8845E-03 PERCENT ERROR= 0.2

SUMMARY OF DAM OVERTOPPING/BREACH ANALYSIS FOR STATION 38R-1
(PEAKS SHOWN ARE FOR INTERNAL TIME STEP USED DURING BREACH FORMATION)

PLAN 1 .....

	INITIAL VALUE	SPILLWAY CREST	TOP OF DAM
ELEVATION	0.00	5.00	5.00
STORAGE	0.	63.	63.
OUTFLOW	0.	700.	700.

RATIO OF PMF	MAXIMUM RESERVOIR W.S.ELEV	MAXIMUM DEPTH OVER DAM	MAXIMUM STORAGE AC-FT	MAXIMUM OUTFLOW CFS	DURATION OVER TOP HOURS	TIME OF MAX OUTFLOW HOURS	TIME OF FAILURE HOURS
1.00	3.74	0.00	47.	523.	0.00	12.92	0.00

SUMMARY OF DAM OVERTOPPING/BREACH ANALYSIS FOR STATION CELL2
(PEAKS SHOWN ARE FOR INTERNAL TIME STEP USED DURING BREACH FORMATION)

PLAN 1 .....

	INITIAL VALUE	SPILLWAY CREST	TOP OF DAM
ELEVATION	1609.00	1621.00	1621.00
STORAGE	0.	138.	138.
OUTFLOW	0.	380.	380.

RATIO OF PMF	MAXIMUM RESERVOIR W.S.ELEV	MAXIMUM DEPTH OVER DAM	MAXIMUM STORAGE AC-FT	MAXIMUM OUTFLOW CFS	DURATION OVER TOP HOURS	TIME OF MAX OUTFLOW HOURS	TIME OF FAILURE HOURS
1.00	1619.97	0.00	125.	354.	0.00	14.83	0.00

SUMMARY OF DAM OVERTOPPING/BREACH ANALYSIS FOR STATION CELL1
(PEAKS SHOWN ARE FOR INTERNAL TIME STEP USED DURING BREACH FORMATION)

PLAN 1 .....

	INITIAL VALUE	SPILLWAY CREST	TOP OF DAM
ELEVATION	1592.00	1606.00	1606.00
STORAGE	0.	392.	392.
OUTFLOW	0.	2525.	2525.

RATIO OF PMF	MAXIMUM RESERVOIR W.S.ELEV	MAXIMUM DEPTH OVER DAM	MAXIMUM STORAGE AC-FT	MAXIMUM OUTFLOW CFS	DURATION OVER TOP HOURS	TIME OF MAX OUTFLOW HOURS	TIME OF FAILURE HOURS
1.00	1605.84	0.00	387.	2507.	0.00	13.50	0.00

SUMMARY OF DAM OVERTOPPING/BREACH ANALYSIS FOR STATION 38R-2
(PEAKS SHOWN ARE FOR INTERNAL TIME STEP USED DURING BREACH FORMATION)

PLAN 1 .....

	INITIAL VALUE	SPILLWAY CREST	TOP OF DAM
ELEVATION	1595.00	1606.00	1606.00
STORAGE	0.	62.	62.
OUTFLOW	0.	809.	809.

RATIO OF PMF	MAXIMUM RESERVOIR W.S.ELEV	MAXIMUM DEPTH OVER DAM	MAXIMUM STORAGE AC-FT	MAXIMUM OUTFLOW CFS	DURATION OVER TOP HOURS	TIME OF MAX OUTFLOW HOURS	TIME OF FAILURE HOURS
1.00	1601.52	0.00	21.	457.	0.00	12.67	0.00

*** NORMAL END OF HEC-1 ***

-----DSS---ZCLOSE Unit: 71, File: OLFC24U.DSS
Pointer Utilization: 0.36
Number of Records: 27
File Size: 56.0 Kbytes
Percent Inactive: 0.0

APPENDIX B - HEC-1 FILE: CAP4.24I

```
****************************************
*                                      *
*   FLOOD HYDROGRAPH PACKAGE  (HEC-1)  *
*              MAY   1991              *
*           VERSION 4.0.1E             *
*                                      *
*  RUN DATE  06/28/94  TIME  13:29:34  *
*                                      *
****************************************
```

```
****************************************
*                                      *
*   U.S. ARMY CORPS OF ENGINEERS       *
*   HYDROLOGIC ENGINEERING CENTER      *
*         609 SECOND STREET            *
*      DAVIS, CALIFORNIA 95616         *
*          (916) 551-1748              *
*                                      *
****************************************
```

```
X     X  XXXXXXX   XXXXX          X
X     X  X        X     X        XX
X     X  X        X              X
XXXXXXX  XXXX     X        XXXXX X
X     X  X        X              X
X     X  X        X     X        X
X     X  XXXXXXX   XXXXX         XXX
```

THIS PROGRAM REPLACES ALL PREVIOUS VERSIONS OF HEC-1 KNOWN AS HEC1 (JAN 73), HEC1GS, HEC1DB, AND HEC1KW.

THE DEFINITIONS OF VARIABLES -RTIMP- AND -RTIOR- HAVE CHANGED FROM THOSE USED WITH THE 1973-STYLE INPUT STRUCTURE.
THE DEFINITION OF -AMSKK- ON RM-CARD WAS CHANGED WITH REVISIONS DATED 28 SEP 81. THIS IS THE FORTRAN77 VERSION
NEW OPTIONS: DAMBREAK OUTFLOW SUBMERGENCE , SINGLE EVENT DAMAGE CALCULATION, DSS:WRITE STAGE FREQUENCY,
DSS:READ TIME SERIES AT DESIRED CALCULATION INTERVAL LOSS RATE:GREEN AND AMPT INFILTRATION
KINEMATIC WAVE: NEW FINITE DIFFERENCE ALGORITHM

```
LINE          ID.......1.......2.......3.......4.......5.......6.......7.......8.......9......10

  1           ID        GENERAL DRAINAGE PLAN FOR NORTH SCOTTSDALE
  2           ID        FUTURE LAND USE CONDITIONS WITH EXISTING DRAINAGE PATTERN
  3           ID        MODEL GN40.24I + GN50.24I -- SUB-BASIN SERIES 2000 TO 2230 & 39 TO 53
  4           ID                                     SUB-BASIN SERIES 2240 TO 2340
  5           ID
  6           ID        THIS IS MODEL CAP4.24I THAT IS USED TO DETERMINE THE MAXIMUM WATER
  7           ID        SURFACE ELEVATION BEHIND CAP DIKE NO. 4, WITH NO UPSTREAM DRAIANGE
  8           ID        IMPROVEMENTS IN-PLACE.
  9           ID        SUB 2125 HAS BEEN ADDED
 10           ID
 11           ID        100-YEAR, 24-HOUR STORM, USING SCS TYPE IIA RAINFALL DISTRIBUTION
 12           ID        RAINFALL FROM NOAA ATLAS, USING 25 SQ MI AREAL REDUCTION FACTOR
 13           ID
 14           ID        LAND USE DENSITIES FROM GENERAL PLAN & TONTO FOOTHILLS PLAN.
 15           ID        PERCENT OF IMPERVIOUS COVER HAS BEEN MODIFIED (5/90) TO REFLECT CITY OF
 16           ID        SCOTTSDALE NAOS REQUIREMENTS.
 17           ID
 18           ID        100% OF THE REATA PASS FAN FLOW IS ROUTED TO CAP DIKE NO.4
 19           ID
 20           ID
 21           IT       5 28APR90       0     300
 22           IO       5       0
 23           IN      30 28APR90       0
             *DIAGRAM

 24           KK   SUB39
 25           KM        RUNOFF FROM SUB-BASIN 39
 26           KM        D.A. HAS BEEN UPDATED TO REFLECT CHANGE FROM REATA PASS SENSITIVITY
 27           KM        STUDY PUBLISHED IN FEB 1992
 28           BA  1.8807
 29           PB    4.25
 30           PC       0    .005    .009    .010    .013    .019    .021    .028    .032    .044
 31           PC    .057    .100    .660    .745    .776    .800    .816    .830    .840    .850
 32           PC    .861    .868    .878    .884    .891    .900    .905    .912    .919    .923
 33           PC    .930    .934    .939    .944    .950    .958    .961    .963    .969    .971
 34           PC    .974    .979    .981    .985    .989    .991    .993    .996   1.000
 35           LS              85   23.40
 36           UK     330   .0433     .20     100
 37           RK   11240   .0253    .045            TRAP      30       3

 38           KK   SUB40
 39           KM        RUNOFF FROM SUB-BASIN 40
 40           BA   .5844
 41           LS              83     9.9
 42           UK     160   .0627     .20     100
 43           RK    7000   .0350    .045            TRAP      20       3

 44           KK    CP41
 45           KM        COMBINE HYDROGRAPHS SUB39 & SUB40
 46           HC       2
```

```
LINE          ID.......1.......2.......3.......4.......5.......6.......7.......8.......9......10

  47          KK   SUB41
  48          KM        RUNOFF FROM SUB-BASIN 41 & ROUTE CP 41
  49          KM        D.A. HAS BEEN UPDATED TO REFLECT CHANGE FROM REATA PASS SENSITIVITY
  50          KM        STUDY PUBLISHED IN FEB 1992
  51          BA   .8270
  52          LS              74    10.1
  53          UK    280   .2386     .20     100
  54          RK   9400   .0282    .045           TRAP      50       3     YES

  55          KK   SUB42
  56          KM        RUNOFF FROM SUB-BASIN 42
  57          BA   .5844
  58          LS              78    23.3
  59          UK    280   .2386     .20     100
  60          RK   8750   .0573    .045           TRAP      20       3

  61          KK   SUB43
  62          KM        RUNOFF FROM SUB-BASIN 43
  63          BA  1.0708
  64          LS              85    10.5
  65          UK    260   .0515     .20     100
  66          RK   7400   .0255    .045           TRAP      25       3

  67          KK   SUB44
  68          KM        RUNOFF FROM SUB-BASIN 44
  69          BA   .8537
  70          LS              85     8.1
  71          UK    260   .0515     .20     100
  72          RK   9840   .0622    .045           TRAP      25       3

  73          KK    CP45
  74          KM        COMBINE HYDROGRAPHS SUB43 & SUB44
  75          HC       2

  76          KK   SUB45
  77          KM        RUNOFF FROM SUB-BASIN 45 & ROUTE CP 45
  78          BA   .2037
  79          LS              81    14.5
  80          UK    125   .1166     .20     100
  81          RK   3600   .0366    .045           TRAP      30       3     YES

  82          KK  SUB45A
  83          KM        RUNOFF FROM SUB 45A
  84          BA   .1720
  85          LS              86     6.9
  86          UK    275   .2200     .20     100
  87          RK   5400   .0411    .045           TRAP      15       3

  88          KK   SUB46
  89          KM        RUNOFF FROM SUB-BASIN 46
  90          BA   .9268
  91          LS              86     3.7
  92          UK    265   .4958     .20     100
  93          RK   3300   .2271    .045    .111   TRAP      10       3
```

```
LINE          ID.......1.......2.......3.......4.......5.......6.......7.......8.......9......10

  94          RK    7100   .0535    .045            TRAP      25       3

  95          KK    CP47
  96          KM        COMBINE HYDROGRAPHS SUB45, SUB45A, & SUB46
  97          HC       3

  98          KK   SUB47
  99          KM        RUNOFF FROM SUB-BASIN 47 & ROUTE CP 47
 100          BA   .3757
 101          LS              77     8.6
 102          UK     375   .1000     .20     100
 103          RK    9600   .0217    .045            TRAP      50       3     YES

 104          KK    CP48
 105          KM        COMBINE HYDROGRAPHS SUB41, SUB42, & SUB47
 106          HC       3

 107          KK   SUB48
 108          KM        RUNOFF FROM SUB-BASIN 48 & ROUTE CP 48
 109          BA   .0438
 110          LS              73     6.9
 111          UK     150   .0733     .20     100
 112          RK    1300   .0338    .045            TRAP      75       3     YES

 113          KK   SUB50
 114          KM        RUNOFF FROM SUB-BASIN 50
 115          BA   .3580
 116          LS              84     2.8
 117          UK     300   .3555     .20     100
 118          RK     730   .1506    .045    .036    TRAP      10       3
 119          RK    6400   .0453    .045            TRAP      25       3

 120          KK    CP51
 121          KM        COMBINE HYDROGRAPHS SUB48 & SUB50
 122          HC       2

 123          KK    2004     DIV
 124          KM        DIVERT FLOW TO SUB 2005
 125          KM        THIS DIVERT OCCURS AT A BRAIDED CHANNEL BIFURCATION LOCATED 1000 FEET
 126          KM        SOUTH OF THE EAST END OF PINNACLE PEAK ROAD.
 127          KM        THIS IS AN ACTIVE ALLUVIAL FAN APEX.
 128          DT    2003
 129          DI       0   15000
 130          DQ       0   15000

 131          KK   SUB49
 132          KM        RUNOFF FROM SUB-BASIN 49
 133          BA   .3528
 134          LS              79     6.9
 135          UK     135   .0758     .20     100
 136          RK    5400   .0370    .045            TRAP      30       3
```

```
LINE          ID.......1.......2.......3.......4.......5.......6.......7.......8.......9......10

  137         KK    49.1      CP
  138         KM        COMBINE SUB 49 WITH NON-DIVERTED FLOW FROM DIV 2004
  139         HC       2

  140         KK   SUB51
  141         KM        RUNOFF FROM SUB-BASIN 51 & ROUTE CP 49.1
  142         BA  1.0675
  143         LS              72   12.90
  144         UK      94   .0213     .10     100
  145         RK    6400   .0329    .045            TRAP    1500       2     YES

  146         KK   SUB52
  147         KM        RUNOFF FROM SUB-BASIN 52 & ROUTE SUB 51
  148         BA  1.3557
  149         LS              71    17.2
  150         UK      76   .0213     .10     100
  151         RK    6633   .0300    .045            TRAP    2500       2     YES

  152         KK   SUB53
  153         KM        RUNOFF FROM SUB-BASIN 53 & ROUTE SUB 52
  154         BA  1.7471
  155         LS              74    58.5
  156         UK      67   .0213     .10     100
  157         RK    7767   .0196    .045            TRAP    3500       2     YES

  158         KK    2000     SUB
  159         KM        RUNOFF FROM SUB 2000
  160         KM        RAINFALL AMOUNT IS CHANGED TO REFLECT TRANSITION INTO A DIFFERENT
  161         KM        GEOGRAPHICAL AREA
  162         BA   .7999
  163         PB    4.15
  164         PC       0    .005    .009    .010    .013    .019    .021    .028    .032    .044
  165         PC    .057    .100    .660    .745    .776    .800    .816    .830    .840    .850
  166         PC    .861    .868    .878    .884    .891    .900    .905    .912    .919    .923
  167         PC    .930    .934    .939    .944    .950    .958    .961    .963    .969    .971
  168         PC    .974    .979    .981    .985    .989    .991    .993    .996   1.000
  169         LS              84     2.6
  170         UK     400   .2750     .25     100
  171         RK    2625   .0785    .045    .072    TRAP      10       3
  172         RK    2300   .0217    .045            TRAP      25       3

  173         KK    2010     SUB
  174         KM        RUNOFF FROM SUB 2010 & ROUTE SUB 2000
  175         BA   .0933
  176         LS              83     3.7
  177         UK     800   .6425     .30     100
  178         RK    3000   .0213    .045            TRAP      50       3     YES

  179         KK    2003     RET
  180         KM        RETRIEVE DIVERTED FLOW FROM DIV 2004
  181         DR    2003
```

```
LINE          ID.......1.......2.......3.......4.......5.......6.......7.......8.......9......10

 182          KK    2005      SUB
 183          KM        RUNOFF FROM 2005 & ROUTE RET 2003
 184          BA   .1363
 185          LS              72    6.70
 186          UK     175   .1400     .15     100
 187          RK    2600   .0385    .045            TRAP     750       2     YES

 188          KK    2011       CP
 189          KM        ROUTE SUB 2005 TO CP 2011
 190          RK    2200   .0213    .045            TRAP      50       3

 191          KK    2012       CP
 192          KM        COMBINE SUB 2010 & CP 2011
 193          HC       2

 194          KK    2015      SUB
 195          KM        RUNOFF FROM SUB 2015 & ROUTE CP 2012
 196          BA   .4053
 197          LS              78    11.4
 198          UK     500   .2800     .25     100
 199          RK    2400   .1358    .045    .061    TRAP      10       3
 200          RK    4700   .0304    .045            TRAP      60      20     YES

 201          KK    2020      SUB
 202          KM        RUNOFF FROM SUB 2020
 203          BA   .1090
 204          LS              85    4.05
 205          UK     205   .6969     .30     100
 206          RK     900   .3889    .045    .011    TRAP      10       3
 207          RK    2800   .1428    .045            TRAP      20       3

 208          KK    2016       CP
 209          KM        ROUTE SUB 2020 TO CP 2016
 210          RK    1400.  .0343    .045            TRAP      20       3

 211          KK    2017       CP
 212          KM        COMBINE SUB 2015 & CP 2016
 213          HC       2

 214          KK    2030      SUB
 215          KM        RUNOFF FROM SUB 2030 & ROUTE CP 2017
 216          BA   .2346
 217          LS              67    29.9
 218          UK     155   .0614     .15     100
 219          RK    3555   .0355    .045    .047    TRAP      10      10
 220          RK    2900   .0262    .045            TRAP      60      20     YES

 221          KK    2040      SUB
 222          KM        RUNOFF FROM SUB 2040
 223          BA   .9290
 224          LS              82     8.3
 225          UK     463   .4072     .25     100
 226          RK    2700   .1878    .045    .056    TRAP      10       3
 227          RK    6800   .0485    .045            TRAP      25       3
```

```
LINE          ID.......1.......2.......3.......4.......5.......6.......7.......8.......9......10

 228          KK    2050     SUB
 229          KM        RUNOFF FROM SUB 2050
 230          BA   .8580
 231          LS              81     9.8
 232          UK     530   .5726     .25     100
 233          RK    3400   .2067    .045    .086    TRAP      10       3
 234          RK    6200   .0693    .045            TRAP      25       5

 235          KK    2051      CP
 236          KM        COMBINE SUB 2040 & SUB 2050
 237          HC       2

 238          KK    2060     SUB
 239          KM        RUNOFF FROM SUB 2060 & ROUTE CP 2051
 240          BA   .1542
 241          LS              77   17.80
 242          UK     217   .1667     .20     100
 243          RK    2275   .0929    .045    .031    TRAP      10       5
 244          RK    2400   .0321    .055            TRAP      30      15     YES

 245          KK    2070     SUB
 246          KM        RUNOFF FROM SUB 2070
 247          BA  1.4649
 248          LS              84    4.05
 249          UK     400   .5174     .30     100
 250          RK    1750   .2962    .045    .048    TRAP       5       3
 251          RK    3500   .1236    .045    .483    TRAP      10       3
 252          RK    3400   .0882    .045            TRAP      30      10

 253          KK    2071     DIV
 254          KM        DIVERT FLOW FROM SUB 2070 TO SUB 2130
 255          DT    2072
 256          DI       0    6000
 257          DQ       0    4000

 258          KK    2065     SUB
 259          KM        RUNOFF FROM SUB 2065 & ROUTE NON-DIVERTED FLOW FROM DIV 2071
 260          BA   .1664
 261          LS              73   31.50
 262          UK     200   .0500     .20     100
 263          RK    6800   .0471    .055            TRAP      30      15     YES

 264          KK    2072     RET
 265          KM        RETRIEVE DIVERTED FLOW FROM DIV 2071
 266          DR    2072

 267          KK    2131      CP
 268          KM        ROUTE RET 2072 TO CP 2131
 269          RK    3600   .0555    .045            TRAP     200       1
```

```
LINE          ID.......1.......2.......3.......4.......5.......6.......7.......8.......9......10

 270          KK    2130     SUB
 271          KM        RUNOFF FROM SUB 2130
 272          BA   .2992
 273          LS              83     7.1
 274          UK     267   .3126     .20     100
 275          RK    9240   .0941    .045           TRAP      30      20

 276          KK    2132      CP
 277          KM        COMBINE SUB 2130 & CP 2131
 278          HC       2

 279          KK    2133     DIV
 280          KM        DIVERT FLOW TO SUB 2135
 281          DT    2134
 282          DI       0     500    1000    6000
 283          DQ       0     500     850    4350

 284          KK    2066      CP
 285          KM        ROUTE NON-DIVERTED FLOW FROM DIV 2133 TO CP 2066
 286          RK    2850   .0421    .045           TRAP      30      15

 287          KK    2067      CP
 288          KM        COMBINE SUB 2060, SUB 2065, & CP 2066
 289          HC       3

 290          KK    2080     SUB
 291          KM        RUNOFF FROM SUB 2080 & ROUTE CP 2067
 292          BA   .1363
 293          LS              68    32.1
 294          UK     175   .0571     .15     100
 295          RK    4000   .0325    .045           TRAP      30      15     YES

 296          KK    2081      CP
 297          KM        COMBINE SUB 2030 & SUB 2080
 298          HC       2

 299          KK    2090     SUB
 300          KM        RUNOFF FROM SUB 2090 & ROUTE CP 2081
 301          BA   .3659
 302          LS              71   24.94
 303          UK     140   .0285     .15     100
 304          RK    9400   .0212    .045           TRAP     200     150     YES

 305          KK    2100     SUB
 306          KM        RUNOFF FROM SUB 2100
 307          BA   .3795
 308          LS              73   24.00
 309          UK     140   .0285     .15     100
 310          RK   14600   .0260    .045           TRAP     100      25
```

```
LINE          ID.......1.......2.......3.......4.......5.......6.......7.......8.......9......10

 311          KK    2101      CP
 312          KM        COMBINE SUB 2090 & SUB 2100
 313          HC       2

 314          KK    2110     SUB
 315          KM        RUNOFF FROM SUB 2110 & ROUTE CP 2101
 316          BA   .5180
 317          LS              74    26.2
 318          UK     200   .0286     .15     100
 319          RK    5400   .0129    .045            TRAP     200     200     YES

 320          KK    2120     SUB
 321          KM        RUNOFF FROM SUB 2120
 322          BA  1.4255
 323          LS              74    28.5
 324          UK     115   .0383     .15     100
 325          RK   20800   .0234    .045            TRAP     150      50

 326          KK    2134     RET
 327          KM        RETIEVE DIVERTED FLOW FROM DIV 2133
 328          DR    2134

 329          KK    2135     SUB
 330          KM        RUNOFF FROM SUB 2135 & ROUTE RET 2134
 331          BA   .1169
 332          LS              86    19.3              74    19.3
 333          UK     800   .4000     .30      40
 334          UK     200   .0500     .15      60
 335          RK    2700   .0444    .045            TRAP      20       2     YES

 336          KK    2140     SUB
 337          KM        RUNOFF FROM SUB 2140 & ROUTE SUB 2135
 338          BA   .1923
 339          LS              74    32.1
 340          UK     200   .0500     .15     100
 341          RK    5300   .0415    .045            TRAP      20      10     YES

 342          KK    2150     SUB
 343          KM        RUNOFF FROM SUB 2150
 344          BA   .6873
 345          LS              86   15.00              74   15.00
 346          UK     350   .3428     .30      50
 347          UK     180   .0555     .15      50
 348          RK    1785   .1313    .045    .027    TRAP      10       3
 349          RK    6400   .0312    .045            TRAP      20      10

 350          KK    2151      CP
 351          KM        COMBINE SUB 2140 & SUB 2150
 352          HC       2
```

```
LINE          ID.......1.......2.......3.......4.......5.......6.......7.......8.......9......10

 353          KK    2160     SUB
 354          KM         RUNOFF FROM SUB 2160 & ROUTE CP 2151
 355          BA   .9871
 356          LS              74    33.8
 357          UK     337   .0324     .15     100
 358          RK    3775   .0276    .045    .059    TRAP      5      3
 359          RK   10600   .0170    .045            TRAP     20     10     YES

 360          KK    2170     SUB
 361          KM         RUNOFF FROM SUB 2170
 362          BA   .4634
 363          LS              74    26.3
 364          UK     250   .0266     .15     100
 365          RK   12500   .0280    .045            TRAP     15     10

 366          KK    2180     SUB
 367          KM         RUNOFF FROM SUB 2180
 368          BA  1.0044
 369          LS              86     2.1
 370          UK     468   .4496     .30     100
 371          RK    3100   .2558    .045    .121    TRAP     10      3
 372          RK    8200   .0731    .045            TRAP     20      5

 373          KK    2190     SUB
 374          KM         RUNOFF FROM SUB 2190 & ROUTE SUB 2180
 375          BA   .1227
 376          LS              79    16.7
 377          UK     190   .0915     .15     100
 378          RK    4100   .0390    .045            TRAP     30     10     YES

 379          KK    2200     SUB
 380          KM         RUNOFF FROM SUB 2200
 381          BA   .2532
 382          LS              81     7.7
 383          UK     353   .1529     .20     100
 384          RK    6150   .0838    .045            TRAP      5     11

 385          KK    2210     SUB
 386          KM         RUNOFF FROM SUB 2210
 387          BA  1.7763
 388          LS              82     2.9
 389          UK     248   .3717     .30     100
 390          RK    4500   .1875    .045    .107    TRAP     10      3
 391          RK   10000   .0490    .045            TRAP     20     10

 392          KK    2211     CP
 393          KM         COMBINE SUB 2190, SUB 2200, & SUB 2210
 394          HC       3
```

```
LINE          ID.......1.......2.......3.......4.......5.......6.......7.......8.......9......10

 395          KK    2220     SUB
 396          KM        RUNOFF FROM SUB 2220 & ROUTE CP 2211
 397          BA   .5660
 398          LS              74    16.5
 399          UK     200   .0500     .15     100
 400          RK    3800   .0326    .045    .057    TRAP      5      3
 401          RK    7800   .0179    .045            TRAP     30     10     YES

 402          KK    2230     SUB
 403          KM        RUNOFF FROM SUB 2230
 404          BA   .3293
 405          LS              74    25.3
 406          UK     200   .0500     .15     100
 407          RK   10000   .0380    .050            TRAP     10      1

 408          KK    2221      CP
 409          KM        ROUTE SUB 2230 TO CP 2221
 410          RK    1200   .0167    .045            TRAP     30     10

 411          KK    2222      CP
 412          KM        COMBINE SUB 2220 & CP 2221
 413          HC       2

 414          KK    2171      CP
 415          KM        COMBINE SUB 2120, SUB 2110, SUB2160, SUB2170, & CP 2222
 416          KM        THIS WILL BE THE TOTAL INFLOW TO CAP DIKE NO.4 FROM MODEL GN40.24I
 417          HC       5
              *      *********** BRING IN MODEL GN40.24I*************************************
              *

 418          KK    2240     SUB
 419          KM        RUNOFF FROM SUB 2240
 420          BA   .6033
 421          PB    4.15
 422          PC       0    .005    .009    .010    .013    .019    .021    .028    .032    .044
 423          PC    .057    .100    .660    .745    .776    .800    .816    .830    .840    .850
 424          PC    .861    .868    .878    .884    .891    .900    .905    .912    .919    .923
 425          PC    .930    .934    .939    .944    .950    .958    .961    .963    .969    .971
 426          PC    .974    .979    .981    .985    .989    .991    .993    .996   1.000
 427          LS              74    25.8
 428          UK     200   .0500     .15     100
 429          RK    9600   .0354    .045            TRAP      8     10

 430          KK    2260     SUB
 431          KM        RUNOFF FROM SUB 2260
 432          BA   .2647
 433          LS              76    20.9
 434          UK     200   .0500     .15     100
 435          RK   11130   .0500    .045            TRAP      8     10
```

```
LINE          ID.......1.......2.......3.......4.......5.......6.......7.......8.......9......10

 436          KK    2255     SUB
 437          KM        RUNOFF FROM SUB 2255
 438          BA   .2955
 439          LS              86   14.60              74   14.60
 440          UK     465   .6014     .25      40
 441          UK     350   .0628     .15      60
 442          RK    1360   .1536    .045    .030    TRAP      5      3
 443          RK    4400   .0386    .045            TRAP     10      3

 444          KK    2270     SUB
 445          KM        RUNOFF FROM SUB 2270
 446          BA   .9714
 447          LS              86    12.5              74    12.5
 448          UK     270   .5185     .30      40
 449          UK     300   .2000     .15      60
 450          RK    3120   .1137    .045    .097    TRAP     10      3
 451          RK    4500   .0333    .045            TRAP     15      3

 452          KK    2271      CP
 453          KM        COMBINE SUB 2255 & SUB 2270
 454          HC       2

 455          KK    2250     SUB
 456          KM        RUNOFF FROM SUB 2250 & ROUTE CP 2271
 457          BA   .2239
 458          LS              82   18.40
 459          UK     130   .1696     .15     100
 460          RK    1625   .0867    .045    .027    TRAP      5      3
 461          RK    4000   .0200    .045            TRAP     30      5    YES

 462          KK    2251      CP
 463          KM        COMBINE SUB 2250 & SUB 2260
 464          HC       2

 465          KK    2280     SUB
 466          KM        RUNOFF FROM SUB 2280 & ROUTE CP 2251
 467          BA   .1808
 468          LS              75    18.1
 469          UK     300   .0300     .15     100
 470          RK    3200   .0187    .045            TRAP     35      5    YES

 471          KK    2290     SUB
 472          KM        RUNOFF FROM SUB 2290
 473          BA   .6005
 474          LS              82   13.90
 475          UK     300   .0499     .15     100
 476          RK    9000   .0367    .045            TRAP     10      4

 477          KK    2300     SUB
 478          KM        RUNOFF FROM SUB 2300
 479          BA  1.8007
 480          LS              84     1.9
 481          UK     303   .4881     .30     100
 482          RK    1310   .2150    .045    .047    TRAP      5      1
```

```
LINE          ID.......1.......2.......3.......4.......5.......6.......7.......8.......9......10

 483          RK    2928   .1451    .045    .306    TRAP      10       3
 484          RK    9600   .0577    .045            TRAP      75      10

 485          KK    2301     DIV
 486          KM        DIVERT FLOW AT FAN APEX TO SUB 2330
 487          DT    2302
 488          DI       0    6000
 489          DQ       0    3000

 490          KK    2310     SUB
 491          KM        RUNOFF FROM SUB 2310 & ROUTE NON-DIVERTED FLOW FROM DIV 2301
 492          BA   .3035
 493          LS              81    11.2
 494          UK     200   .0550     .15     100
 495          RK   10300   .0446    .045            TRAP      30       3     YES

 496          KK    2320     SUB
 497          KM        RUNOFF FROM SUB 2320
 498          BA   .3723
 499          LS              79    14.0
 500          UK     200   .0500     .15     100
 501          RK    7200   .0416    .045            TRAP      15       3

 502          KK    2321      CP
 503          KM        COMBINE SUB 2240, SUB 2280, SUB 2290, SUB 2310, & SUB 2320
 504          HC       5

 505          KK    2302     RET
 506          KM        RETRIEVE DIVERTED FLOW FROM DIV 2301 (SUB 2300)
 507          DR    2302

 508          KK    2331      CP
 509          KM        ROUTE DIVERTED FLOW FROM SUB 2300 TO CP 2331
 510          RK    3600   .0472    .045            TRAP      30       3

 511          KK    2330     SUB
 512          KM        RUNOFF FROM SUB 2330
 513          BA   .4807
 514          LS              82     6.0
 515          UK     352   .3911     .25     100
 516          RK    1920   .2283    .045    .048    TRAP      10       3
 517          RK    5760   .0738    .045            TRAP      30       3

 518          KK    2332      CP
 519          KM        COMBINE SUB 2330 & CP 2331
 520          HC       2

 521          KK    2335     SUB
 522          KM        RUNOFF FROM SUB 2335 & ROUTE CP 2332
 523          BA   .3515
 524          LS              74   34.80
 525          UK     150   .0600     .15     100
 526          RK    7400   .0382    .045            TRAP      30      25     YES
```

```
LINE          ID.......1.......2.......3.......4.......5.......6.......7.......8.......9......10

 395          KK    2220     SUB
 396          KM         RUNOFF FROM SUB 2220 & ROUTE CP 2211
 397          BA   .5660
 398          LS              74    16.5
 399          UK     200   .0500     .15     100
 400          RK    3800   .0326    .045    .057    TRAP      5      3
 401          RK    7800   .0179    .045            TRAP     30     10     YES

 402          KK    2230     SUB
 403          KM         RUNOFF FROM SUB 2230
 404          BA   .3293
 405          LS              74    25.3
 406          UK     200   .0500     .15     100
 407          RK   10000   .0380    .050            TRAP     10      1

 408          KK    2221      CP
 409          KM         ROUTE SUB 2230 TO CP 2221
 410          RK    1200   .0167    .045            TRAP     30     10

 411          KK    2222      CP
 412          KM         COMBINE SUB 2220 & CP 2221
 413          HC       2

 414          KK    2171      CP
 415          KM         COMBINE SUB 2120, SUB 2110, SUB2160, SUB2170, & CP 2222
 416          KM         THIS WILL BE THE TOTAL INFLOW TO CAP DIKE NO.4 FROM MODEL GN40.24I
 417          HC       5
              *      *********** BRING IN MODEL GN40.24I*************************************
              *

 418          KK    2240     SUB
 419          KM         RUNOFF FROM SUB 2240
 420          BA   .6033
 421          PB   4.15
 422          PC       0    .005    .009    .010    .013    .019    .021    .028    .032    .044
 423          PC    .057    .100    .660    .745    .776    .800    .816    .830    .840    .850
 424          PC    .861    .868    .878    .884    .891    .900    .905    .912    .919    .923
 425          PC    .930    .934    .939    .944    .950    .958    .961    .963    .969    .971
 426          PC    .974    .979    .981    .985    .989    .991    .993    .996   1.000
 427          LS              74    25.8
 428          UK     200   .0500     .15     100
 429          RK    9600   .0354    .045            TRAP      8     10

 430          KK    2260     SUB
 431          KM         RUNOFF FROM SUB 2260
 432          BA   .2647
 433          LS              76    20.9
 434          UK     200   .0500     .15     100
 435          RK   11130   .0500    .045            TRAP      8     10
```

```
LINE          ID.......1.......2.......3.......4.......5.......6.......7.......8.......9......10

 436          KK    2255     SUB
 437          KM        RUNOFF FROM SUB 2255
 438          BA   .2955
 439          LS              86   14.60              74   14.60
 440          UK     465   .6014     .25      40
 441          UK     350   .0628     .15      60
 442          RK    1360   .1536    .045    .030    TRAP      5       3
 443          RK    4400   .0386    .045            TRAP     10       3

 444          KK    2270     SUB
 445          KM        RUNOFF FROM SUB 2270
 446          BA   .9714
 447          LS              86    12.5              74    12.5
 448          UK     270   .5185     .30      40
 449          UK     300   .2000     .15      60
 450          RK    3120   .1137    .045    .097    TRAP     10       3
 451          RK    4500   .0333    .045            TRAP     15       3

 452          KK    2271      CP
 453          KM        COMBINE SUB 2255 & SUB 2270
 454          HC       2

 455          KK    2250     SUB
 456          KM        RUNOFF FROM SUB 2250 & ROUTE CP 2271
 457          BA   .2239
 458          LS              82   18.40
 459          UK     130   .1696     .15     100
 460          RK    1625   .0867    .045    .027    TRAP      5       3
 461          RK    4000   .0200    .045            TRAP     30       5     YES

 462          KK    2251      CP
 463          KM        COMBINE SUB 2250 & SUB 2260
 464          HC       2

 465          KK    2280     SUB
 466          KM        RUNOFF FROM SUB 2280 & ROUTE CP 2251
 467          BA   .1808
 468          LS              75    18.1
 469          UK     300   .0300     .15     100
 470          RK    3200   .0187    .045            TRAP     35       5     YES

 471          KK    2290     SUB
 472          KM        RUNOFF FROM SUB 2290
 473          BA   .6005
 474          LS              82   13.90
 475          UK     300   .0499     .15     100
 476          RK    9000   .0367    .045            TRAP     10       4

 477          KK    2300     SUB
 478          KM        RUNOFF FROM SUB 2300
 479          BA  1.8007
 480          LS              84     1.9
 481          UK     303   .4881     .30     100
 482          RK    1310   .2150    .045    .047    TRAP      5       1
```

```
LINE          ID.......1.......2.......3.......4.......5.......6.......7.......8.......9......10

 483          RK    2928   .1451    .045    .306    TRAP      10       3
 484          RK    9600   .0577    .045            TRAP      75      10

 485          KK    2301     DIV
 486          KM        DIVERT FLOW AT FAN APEX TO SUB 2330
 487          DT    2302
 488          DI       0    6000
 489          DQ       0    3000

 490          KK    2310     SUB
 491          KM        RUNOFF FROM SUB 2310 & ROUTE NON-DIVERTED FLOW FROM DIV 2301
 492          BA   .3035
 493          LS              81    11.2
 494          UK     200   .0550     .15     100
 495          RK   10300   .0446    .045            TRAP      30       3     YES

 496          KK    2320     SUB
 497          KM        RUNOFF FROM SUB 2320
 498          BA   .3723
 499          LS              79    14.0
 500          UK     200   .0500     .15     100
 501          RK    7200   .0416    .045            TRAP      15       3

 502          KK    2321      CP
 503          KM        COMBINE SUB 2240, SUB 2280, SUB 2290, SUB 2310, & SUB 2320
 504          HC       5

 505          KK    2302     RET
 506          KM        RETRIEVE DIVERTED FLOW FROM DIV 2301 (SUB 2300)
 507          DR    2302

 508          KK    2331      CP
 509          KM        ROUTE DIVERTED FLOW FROM SUB 2300 TO CP 2331
 510          RK    3600   .0472    .045            TRAP      30       3

 511          KK    2330     SUB
 512          KM        RUNOFF FROM SUB 2330
 513          BA   .4807
 514          LS              82     6.0
 515          UK     352   .3911     .25     100
 516          RK    1920   .2283    .045    .048    TRAP      10       3
 517          RK    5760   .0738    .045            TRAP      30       3

 518          KK    2332      CP
 519          KM        COMBINE SUB 2330 & CP 2331
 520          HC       2

 521          KK    2335     SUB
 522          KM        RUNOFF FROM SUB 2335 & ROUTE CP 2332
 523          BA   .3515
 524          LS              74   34.80
 525          UK     150   .0600     .15     100
 526          RK    7400   .0382    .045            TRAP      30      25     YES
```

```
LINE          ID.......1.......2.......3.......4.......5.......6.......7.......8.......9......10

 527          KK    2340     SUB
 528          KM        RUNOFF FROM SUB 2340
 529          BA   .2776
 530          LS              86    44.4              74    44.4
 531          UK     500   .4000     .30      30
 532          UK     160   .0625     .15      70
 533          RK    7050   .0526    .045            TRAP      10       3

 534          KK    2322      CP
 535          KM        COMBINE SUB 2335, SUB 2340, & CP 2321
 536          KM        THIS IS THE TOTAL INFLOW FROM MODEL GN50.24I TO CAP DIKE NO.4
 537          HC       3

 538          KK    2125     SUB
 539          KM        RUNOFF FROM SUB-BASIN 2125
 540          BA   .0739
 541          LS              74      72
 542          UK     115   .0383     .15     100
 543          RK    3400   .0150    .045            TRAP      15       5

 544          KK   RET21
 545          KM        RETRIEVE HYDROGRAPH FROM SUB 21 (COMBINES 21A & 21B)
 546          ZR   =QI       A=CORE SOUTH         B=SUB21 A&B         C=FLOW

 547          KK  CP2125
 548          KM        COMBINE RUNOFF FROM SUBBASIN 2125 WITH RETRIEVED HYDROGRAPH FROM
 549          KM        SUBBASIN 21
 550          HC       2

 551          KK    2126      CP
 552          KM        ROUTE SUB 2125 TO CAP DIKE 4
 553          RK    3300   .0130    .030            TRAP      10       3

 554          KK     4IN      CP
 555          KM        COMBINE CP 2171, CP 2322, & CP 2126
 556          KM        THIS IS THE TOTAL INFLOW TO CAP DIKE NO. 4
 557          HC       3
 558          ZZ
```

```
                 SCHEMATIC DIAGRAM OF STREAM NETWORK
INPUT
LINE      (V) ROUTING          (--->) DIVERSION OR PUMP FLOW

NO.       (.) CONNECTOR        (<---) RETURN OF DIVERTED OR PUMPED FLOW

 24        SUB39
              .
              .
 38           .       SUB40
              .          .
              .          .
 44        CP41............
              V
              V
 47        SUB41 ***
              .
              .
 55           .       SUB42
              .          .
              .          .
 61           .          .       SUB43
              .          .          .
              .          .          .
 67           .          .          .      SUB44
              .          .          .          .
              .          .          .          .
 73           .          .       CP45............
              .          .          V
              .          .          V
 76           .          .       SUB45 ***
              .          .          .
              .          .          .
 82           .          .          .     SUB45A
              .          .          .          .
              .          .          .          .
 88           .          .          .          .      SUB46
              .          .          .          .          .
              .          .          .          .          .
 95           .          .       CP47.......................
              .          .          V
              .          .          V
 98           .          .       SUB47 ***
              .          .          .
              .          .          .
104        CP48........................
              V
              V
107        SUB48 ***
              .
              .
113           .       SUB50
              .          .
              .          .
120        CP51............
              .
              .
128           .-------->    2003
123        2004
```

```
                .
                .
131             .       SUB49
                .          .
                .          .
137         49.1............
                V
                V
140         SUB51 ***
                V
                V
146         SUB52 ***
                V
                V
152         SUB53 ***
                .
                .
158             .       2000
                .          V
                .          V
173             .       2010 ***
                .          .
                .          .
181             .          .          .<-------    2003
179             .          .       2003
                .          .          V
                .          .          V
182             .          .       2005 ***
                .          .          V
                .          .          V
188             .          .       2011
                .          .          .
                .          .          .
191             .       2012............
                .          V
                .          V
194             .       2015 ***
                .          .
                .          .
201             .          .       2020
                .          .          V
                .          .          V
208             .          .       2016
                .          .          .
                .          .          .
211             .       2017............
                .          V
                .          V
214             .       2030 ***
                .          .
                .          .
221             .          .       2040
                .          .          .
                .          .          .
228             .          .          .       2050
                .          .          .          .
                .          .          .          .
235             .          .       2051............
                .          .          V
                .          .          V
```

```
238          .          .        2060 ***
             .          .          .
             .          .          .
245          .          .          .        2070
             .          .          .          .
             .          .          .          .
255          .          .          .          .-------->    2072
253          .          .          .        2071
             .          .          .          V
             .          .          .          V
258          .          .          .        2065 ***
             .          .          .          .
             .          .          .          .
266          .          .          .          .          .<--------    2072
264          .          .          .          .        2072
             .          .          .          .          V
             .          .          .          .          V
267          .          .          .          .        2131
             .          .          .          .          .
             .          .          .          .          .
270          .          .          .          .          .        2130
             .          .          .          .          .          .
             .          .          .          .          .          .
276          .          .          .          .        2132............
             .          .          .          .          .
             .          .          .          .          .
281          .          .          .          .          .-------->    2134
279          .          .          .          .        2133
             .          .          .          .          V
             .          .          .          .          V
284          .          .          .          .        2066
             .          .          .          .          .
             .          .          .          .          .
287          .          .        2067........................
             .          .          V
             .          .          V
290          .          .        2080 ***
             .          .          .
             .          .          .
296          .        2081............
             .          V
             .          V
299          .        2090 ***
             .          .
             .          .
305          .          .        2100
             .          .          .
             .          .          .
311          .        2101............
             .          V
             .          V
314          .        2110 ***
             .          .
             .          .
320          .          .        2120
             .          .          .
             .          .          .
328          .          .          .          .<--------    2134
326          .          .          .        2134
             .          .          .          V
```

```
                                                  V
329                                               2135 ***
                                                  V
                                                  V
336                                               2140 ***
                                                  .
                                                  .
342                                               .        2150
                                                  .          .
                                                  .          .
350                                               2151.......
                                                  V
                                                  V
353                                               2160 ***
                                                  .
                                                  .
360                                               .        2170
                                                  .          .
                                                  .          .
366                                               .          .        2180
                                                  .          .          V
                                                  .          .          V
373                                               .          .        2190 ***
                                                  .          .          .
                                                  .          .          .
379                                               .          .          .        2200
                                                  .          .          .          .
                                                  .          .          .          .
385                                               .          .          .          .        2210
                                                  .          .          .          .          .
                                                  .          .          .          .          .
392                                               .          .        2211.......................
                                                  .          .          V
                                                  .          .          V
395                                               .          .        2220 ***
                                                  .          .          .
                                                  .          .          .
402                                               .          .          .        2230
                                                  .          .          .          V
                                                  .          .          .          V
408                                               .          .          .        2221
                                                  .          .          .          .
                                                  .          .          .          .
411                                               .          .        2222............
                                                  .          .          .
                                                  .          .          .
414                                       2171.......................................
                                          .
                                          .
418                                       .        2240
                                          .          .
                                          .          .
430                                       .        2260
                                          .          .
                                          .          .
436                                       .          .        2255
                                          .          .          .
                                          .          .          .
444                                       .          .          .        2270
                                          .          .          .          .
```

```
452                                  2271............
                                       V
                                       V
455                                  2250 ***
                                       .
                                       .
462                            2251............
                                 V
                                 V
465                            2280 ***
                                 .
                                 .
471                                  2290
                                       .
                                       .
477                                          2300
                                             .
                                             .
487                                          .-------->    2302
485                                          2301
                                             V
                                             V
490                                          2310 ***
                                             .
                                             .
496                                          .       2320
                                             .         .
                                             .         .
502                       2321.............................................
                                 .
                                 .
507                              .<-------    2302
505                            2302
                                 V
                                 V
508                            2331
                                 .
                                 .
511                                  2330
                                       .
                                       .
518                            2332............
                                 V
                                 V
521                            2335 ***
                                 .
                                 .
527                                  2340
                                       .
                                       .
534                       2322........................
                                 .
                                 .
538                            2125
                                 .
                                 .
547                       CP2125............
                                 V
                                 V
```

```
551          .          .        2126
             .          .          .
             .          .          .
554        4IN.......................
```

(***) RUNOFF ALSO COMPUTED AT THIS LOCATION

```
*****************************************
*                                       *
*   FLOOD HYDROGRAPH PACKAGE  (HEC-1)   *
*          MAY   1991                   *
*         VERSION 4.0.1E                *
*                                       *
*  RUN DATE  06/28/94  TIME  13:29:34   *
*                                       *
*****************************************
```

```
*****************************************
*                                       *
*   U.S. ARMY CORPS OF ENGINEERS        *
*   HYDROLOGIC ENGINEERING CENTER       *
*         609 SECOND STREET             *
*      DAVIS, CALIFORNIA 95616          *
*          (916) 551-1748               *
*                                       *
*****************************************
```

GENERAL DRAINAGE PLAN FOR NORTH SCOTTSDALE
FUTURE LAND USE CONDITIONS WITH EXISTING DRAINAGE PATTERN
MODEL GN40.24I + GN50.24I -- SUB-BASIN SERIES 2000 TO 2230 & 39 TO 53
SUB-BASIN SERIES 2240 TO 2340

THIS IS MODEL CAP4.24I THAT IS USED TO DETERMINE THE MAXIMUM WATER SURFACE ELEVATION BEHIND CAP DIKE NO. 4, WITH NO UPSTREAM DRAIANGE IMPROVEMENTS IN-PLACE.
SUB 2125 HAS BEEN ADDED

100-YEAR, 24-HOUR STORM, USING SCS TYPE IIA RAINFALL DISTRIBUTION
RAINFALL FROM NOAA ATLAS, USING 25 SQ MI AREAL REDUCTION FACTOR

LAND USE DENSITIES FROM GENERAL PLAN & TONTO FOOTHILLS PLAN.
PERCENT OF IMPERVIOUS COVER HAS BEEN MODIFIED (5/90) TO REFLECT CITY OF SCOTTSDALE NAOS REQUIREMENTS.

100% OF THE REATA PASS FAN FLOW IS ROUTED TO CAP DIKE NO.4

```
22 IO        OUTPUT CONTROL VARIABLES
                  IPRNT          5  PRINT CONTROL
                  IPLOT          0  PLOT CONTROL
                  QSCAL         0.  HYDROGRAPH PLOT SCALE

   IT        HYDROGRAPH TIME DATA
                   NMIN          5  MINUTES IN COMPUTATION INTERVAL
                  IDATE     28APR90  STARTING DATE
                  ITIME        0000  STARTING TIME
                     NQ         300  NUMBER OF HYDROGRAPH ORDINATES
                 NDDATE     29APR90  ENDING DATE
                 NDTIME        0055  ENDING TIME
                  ICENT          19  CENTURY MARK

            COMPUTATION INTERVAL    0.08 HOURS
                 TOTAL TIME BASE   24.92 HOURS

      ENGLISH UNITS
          DRAINAGE AREA          SQUARE MILES
          PRECIPITATION DEPTH    INCHES
          LENGTH, ELEVATION      FEET
          FLOW                   CUBIC FEET PER SECOND
          STORAGE VOLUME         ACRE-FEET
          SURFACE AREA           ACRES
          TEMPERATURE            DEGREES FAHRENHEIT
```

```
*** FDKRUT WARNING TIME STEP CALCULATION FAILED TO CONVERGE. STABILITY PROBLEMS MAY RESULT

*** FDKRUT WARNING TIME STEP CALCULATION FAILED TO CONVERGE. STABILITY PROBLEMS MAY RESULT

*** FDKRUT WARNING TIME STEP CALCULATION FAILED TO CONVERGE. STABILITY PROBLEMS MAY RESULT

*** FDKRUT WARNING TIME STEP CALCULATION FAILED TO CONVERGE. STABILITY PROBLEMS MAY RESULT

*** FDKRUT WARNING TIME STEP CALCULATION FAILED TO CONVERGE. STABILITY PROBLEMS MAY RESULT

*** FDKRUT WARNING TIME STEP CALCULATION FAILED TO CONVERGE. STABILITY PROBLEMS MAY RESULT

*** FDKRUT WARNING TIME STEP CALCULATION FAILED TO CONVERGE. STABILITY PROBLEMS MAY RESULT

*** FDKRUT WARNING TIME STEP CALCULATION FAILED TO CONVERGE. STABILITY PROBLEMS MAY RESULT

*** FDKRUT WARNING TIME STEP CALCULATION FAILED TO CONVERGE. STABILITY PROBLEMS MAY RESULT

*** FDKRUT WARNING TIME STEP CALCULATION FAILED TO CONVERGE. STABILITY PROBLEMS MAY RESULT

*** FDKRUT WARNING TIME STEP CALCULATION FAILED TO CONVERGE. STABILITY PROBLEMS MAY RESULT

-----DSS---ZOPEN:  Existing File Opened,  File: MP9241.DSS
                   Unit:  71;  DSS Version: 6-EA
-----DSS--- ZREAD Unit  71; Vers.    2:  /CORE SOUTH/SUB21 A&B/FLOW/27APR1990/5MIN//
-----DSS--- ZREAD Unit  71; Vers.    2:  /CORE SOUTH/SUB21 A&B/FLOW/27APR1990/5MIN//
-----DSS--- ZREAD Unit  71; Vers.    2:  /CORE SOUTH/SUB21 A&B/FLOW/28APR1990/5MIN//
-----DSS--- ZREAD Unit  71; Vers.    2:  /CORE SOUTH/SUB21 A&B/FLOW/29APR1990/5MIN//
```

RUNOFF SUMMARY
FLOW IN CUBIC FEET PER SECOND
TIME IN HOURS, AREA IN SQUARE MILES

OPERATION	STATION	PEAK FLOW	TIME OF PEAK	AVERAGE FLOW FOR MAXIMUM PERIOD 6-HOUR	24-HOUR	72-HOUR	BASIN AREA	MAXIMUM STAGE	TIME OF MAX STAGE
HYDROGRAPH AT	SUB39	4170.	6.00	500.	152.	146.	1.88		
HYDROGRAPH AT	SUB40	1298.	6.00	137.	42.	40.	0.58		
2 COMBINED AT	CP41	5467.	6.00	637.	194.	186.	2.47		
HYDROGRAPH AT	SUB41	6545.	6.08	774.	237.	228.	3.29		
HYDROGRAPH AT	SUB42	1205.	6.00	131.	40.	39.	0.58		
HYDROGRAPH AT	SUB43	2441.	6.00	267.	81.	78.	1.07		
HYDROGRAPH AT	SUB44	1913.	6.00	210.	64.	61.	0.85		
2 COMBINED AT	CP45	4354.	6.00	476.	145.	139.	1.92		
HYDROGRAPH AT	SUB45	4604.	6.00	521.	159.	153.	2.13		
HYDROGRAPH AT	SUB45A	413.	6.00	44.	13.	13.	0.17		
HYDROGRAPH AT	SUB46	2245.	6.00	232.	70.	68.	0.93		
3 COMBINED AT	CP47	7262.	6.00	797.	242.	233.	3.23		
HYDROGRAPH AT	SUB47	7657.	6.08	860.	262.	252.	3.60		
3 COMBINED AT	CP48	15234.	6.08	1762.	539.	520.	7.48		
HYDROGRAPH AT	SUB48	15128.	6.08	1772.	542.	522.	7.52		
HYDROGRAPH AT	SUB50	801.	6.00	83.	25.	24.	0.36		
2 COMBINED AT	CP51	15819.	6.08	1854.	567.	547.	7.88		
DIVERSION TO	2003	15819.	0.08	1854.	567.	547.	7.88		
HYDROGRAPH AT	2004	0.	0.08	0.	0.	0.	7.88		
HYDROGRAPH AT	SUB49	687.	6.00	70.	22.	21.	0.35		
2 COMBINED AT	49.1	687.	6.00	70.	22.	21.	8.23		
HYDROGRAPH AT	SUB51	1522.	6.25	239.	76.	74.	9.30		
HYDROGRAPH AT	SUB52	1786.	6.67	448.	146.	140.	10.66		
HYDROGRAPH AT	SUB53	2338.	6.33	888.	287.	277.	12.40		
HYDROGRAPH AT	2000	1714.	6.00	178.	54.	52.	0.80		
HYDROGRAPH AT	2010	1790.	6.00	196.	60.	58.	0.89		

HYDROGRAPH AT	2003	15819.	6.08	1854.	567.	547.	0.00
HYDROGRAPH AT	2005	15261.	6.08	1868.	571.	550.	0.14
ROUTED TO	2011	14665.	6.08	1873.	572.	551.	0.14
2 COMBINED AT	2012	16434.	6.08	2067.	632.	609.	1.03
HYDROGRAPH AT	2015	16694.	6.17	2130.	653.	629.	1.43
HYDROGRAPH AT	2020	256.	6.00	26.	8.	7.	0.11
ROUTED TO	2016	250.	6.00	26.	8.	7.	0.11
2 COMBINED AT	2017	16810.	6.17	2153.	661.	636.	1.54
HYDROGRAPH AT	2030	16447.	6.17	2195.	674.	649.	1.78
HYDROGRAPH AT	2040	1844.	6.00	200.	61.	59.	0.93
HYDROGRAPH AT	2050	1669.	6.00	181.	56.	54.	0.86
2 COMBINED AT	2051	3513.	6.00	381.	117.	113.	1.79
HYDROGRAPH AT	2060	3702.	6.08	409.	126.	121.	1.94
HYDROGRAPH AT	2070	3179.	6.00	330.	101.	97.	1.46
DIVERSION TO	2072	2119.	6.00	220.	67.	65.	1.46
HYDROGRAPH AT	2071	1060.	6.00	110.	34.	32.	1.46
HYDROGRAPH AT	2065	1279.	6.08	142.	44.	42.	1.63
HYDROGRAPH AT	2072	2119.	6.00	220.	67.	65.	0.00
ROUTED TO	2131	2023.	6.08	219.	67.	64.	0.00
HYDROGRAPH AT	2130	571.	6.00	66.	20.	20.	0.30
2 COMBINED AT	2132	2582.	6.08	284.	87.	84.	0.30
DIVERSION TO	2134	1957.	6.08	248.	78.	75.	0.30
HYDROGRAPH AT	2133	625.	6.08	36.	9.	9.	0.30
ROUTED TO	2066	618.	6.08	37.	9.	9.	0.30
3 COMBINED AT	2067	5600.	6.08	588.	179.	173.	3.87
HYDROGRAPH AT	2080	5368.	6.08	611.	187.	180.	4.01
2 COMBINED AT	2081	21758.	6.17	2804.	861.	829.	5.79
HYDROGRAPH AT	2090	20962.	6.33	2865.	882.	849.	6.15
HYDROGRAPH AT	2100	281.	6.50	71.	22.	21.	0.38
2 COMBINED AT	2101	21221.	6.33	2930.	904.	871.	6.53

HYDROGRAPH AT	2110	21220.	6.50	2994.	932.	898.	7.05
HYDROGRAPH AT	2120	1034.	6.67	286.	90.	87.	1.43
HYDROGRAPH AT	2134	1957.	6.08	248.	78.	75.	0.00
HYDROGRAPH AT	2135	2119.	6.08	273.	86.	83.	0.12
HYDROGRAPH AT	2140	2368.	6.08	312.	98.	95.	0.31
HYDROGRAPH AT	2150	1283.	6.08	148.	46.	44.	0.69
2 COMBINED AT	2151	3652.	6.08	460.	144.	138.	1.00
HYDROGRAPH AT	2160	4842.	6.25	662.	207.	200.	1.98
HYDROGRAPH AT	2170	580.	6.17	92.	29.	28.	0.46
HYDROGRAPH AT	2180	2206.	6.00	239.	73.	70.	1.00
HYDROGRAPH AT	2190	2344.	6.08	263.	80.	77.	1.13
HYDROGRAPH AT	2200	483.	6.00	52.	16.	16.	0.25
HYDROGRAPH AT	2210	3355.	6.08	365.	113.	108.	1.78
3 COMBINED AT	2211	6147.	6.08	680.	209.	201.	3.16
HYDROGRAPH AT	2220	6808.	6.17	772.	238.	230.	3.72
HYDROGRAPH AT	2230	539.	6.00	65.	20.	20.	0.33
ROUTED TO	2221	536.	6.08	65.	20.	20.	0.33
2 COMBINED AT	2222	7263.	6.17	836.	259.	249.	4.05
5 COMBINED AT	2171	27719.	6.50	4856.	1517.	1461.	14.97
HYDROGRAPH AT	2240	977.	6.08	121.	38.	36.	0.60
HYDROGRAPH AT	2260	394.	6.08	53.	16.	16.	0.26
HYDROGRAPH AT	2255	553.	6.00	61.	19.	18.	0.30
HYDROGRAPH AT	2270	1876.	6.00	198.	61.	59.	0.97
2 COMBINED AT	2271	2429.	6.00	260.	80.	77.	1.27
HYDROGRAPH AT	2250	2737.	6.00	310.	96.	92.	1.49
2 COMBINED AT	2251	3101.	6.08	362.	112.	108.	1.76
HYDROGRAPH AT	2280	3342.	6.08	395.	122.	118.	1.94
HYDROGRAPH AT	2290	1162.	6.00	135.	41.	40.	0.60
HYDROGRAPH AT	2300	3636.	6.08	396.	121.	117.	1.80
DIVERSION TO	2302	1818.	6.08	198.	61.	58.	1.80

HYDROGRAPH AT	2301	1818.	6.08	198.	61.	58.	1.80
HYDROGRAPH AT	2310	2219.	6.08	259.	80.	77.	2.10
HYDROGRAPH AT	2320	699.	6.00	76.	24.	23.	0.37
5 COMBINED AT	2321	8315.	6.08	983.	304.	293.	5.62
HYDROGRAPH AT	2302	1818.	6.08	198.	61.	58.	0.00
ROUTED TO	2331	1799.	6.08	198.	60.	58.	0.00
HYDROGRAPH AT	2330	980.	6.00	102.	31.	30.	0.48
2 COMBINED AT	2332	2682.	6.08	299.	92.	88.	0.48
HYDROGRAPH AT	2335	2993.	6.17	370.	115.	111.	0.83
HYDROGRAPH AT	2340	625.	6.00	71.	22.	21.	0.28
3 COMBINED AT	2322	11568.	6.08	1424.	441.	425.	6.73
HYDROGRAPH AT	2125	189.	6.00	22.	7.	7.	0.07
HYDROGRAPH AT	RET21	377.	6.08	63.	19.	18.	0.07
2 COMBINED AT	CP2125	532.	6.08	85.	26.	25.	0.15
ROUTED TO	2126	531.	6.08	85.	26.	25.	0.15
3 COMBINED AT	4IN	31534.	6.50	6353.	1984.	1911.	21.85

SUMMARY OF KINEMATIC WAVE - MUSKINGUM-CUNGE ROUTING
(FLOW IS DIRECT RUNOFF WITHOUT BASE FLOW)

ISTAQ	ELEMENT	DT (MIN)	PEAK (CFS)	TIME TO PEAK (MIN)	VOLUME (IN)	INTERPOLATED TO COMPUTATION INTERVAL DT (MIN)	PEAK (CFS)	TIME TO PEAK (MIN)	VOLUME (IN)
SUB39	MANE	2.74	4308.02	361.31	3.01	5.00	4169.67	360.00	3.00

CONTINUITY SUMMARY (AC-FT) - INFLOW=0.0000E+00 EXCESS=0.3058E+03 OUTFLOW=0.3020E+03 BASIN STORAGE=0.2728E+01 PERCENT ERROR= 0.3

SUB40	MANE	2.18	1309.89	361.25	2.66	5.00	1297.82	360.00	2.66

CONTINUITY SUMMARY (AC-FT) - INFLOW=0.0000E+00 EXCESS=0.8344E+02 OUTFLOW=0.8288E+02 BASIN STORAGE=0.3881E+00 PERCENT ERROR= 0.2

SUB41	MANE	2.08	6564.82	363.35	2.67	5.00	6544.60	365.00	2.68

CONTINUITY SUMMARY (AC-FT) - INFLOW=0.3840E+03 EXCESS=0.8959E+02 OUTFLOW=0.4696E+03 BASIN STORAGE=0.2218E+01 PERCENT ERROR= 0.4

SUB42	MANE	2.33	1221.32	360.87	2.57	5.00	1205.16	360.00	2.57

CONTINUITY SUMMARY (AC-FT) - INFLOW=0.0000E+00 EXCESS=0.8078E+02 OUTFLOW=0.8021E+02 BASIN STORAGE=0.3848E+00 PERCENT ERROR= 0.2

SUB43	MANE	2.22	2467.21	361.47	2.82	5.00	2441.19	360.00	2.81

CONTINUITY SUMMARY (AC-FT) - INFLOW=0.0000E+00 EXCESS=0.1626E+03 OUTFLOW=0.1609E+03 BASIN STORAGE=0.1105E+01 PERCENT ERROR= 0.3

SUB44	MANE	2.31	1948.37	361.29	2.78	5.00	1912.68	360.00	2.78

CONTINUITY SUMMARY (AC-FT) - INFLOW=0.0000E+00 EXCESS=0.1279E+03 OUTFLOW=0.1266E+03 BASIN STORAGE=0.9032E+00 PERCENT ERROR= 0.3

SUB45	MANE	0.88	4750.20	361.60	2.77	5.00	4603.53	360.00	2.77

CONTINUITY SUMMARY (AC-FT) - INFLOW=0.2871E+03 EXCESS=0.2837E+02 OUTFLOW=0.3148E+03 BASIN STORAGE=0.4422E+00 PERCENT ERROR= 0.1

SUB45A	MANE	2.34	414.57	359.61	2.86	5.00	413.42	360.00	2.86

CONTINUITY SUMMARY (AC-FT) - INFLOW=0.0000E+00 EXCESS=0.2638E+02 OUTFLOW=0.2621E+02 BASIN STORAGE=0.1121E+00 PERCENT ERROR= 0.2

SUB46	MANE	1.64	2255.97	361.67	2.81	5.00	2245.31	360.00	2.81

CONTINUITY SUMMARY (AC-FT) - INFLOW=0.0000E+00 EXCESS=0.1398E+03 OUTFLOW=0.1390E+03 BASIN STORAGE=0.3526E+00 PERCENT ERROR= 0.3

SUB47	MANE	2.31	7672.62	365.74	2.71	5.00	7657.26	365.00	2.70

CONTINUITY SUMMARY (AC-FT) - INFLOW=0.4800E+03 EXCESS=0.4412E+02 OUTFLOW=0.5201E+03 BASIN STORAGE=0.2593E+01 PERCENT ERROR= 0.3

SUB48	MANE	0.22	15261.01	365.46	2.68	5.00	15127.70	365.00	2.68

CONTINUITY SUMMARY (AC-FT) - INFLOW=0.1070E+04 EXCESS=0.4402E+01 OUTFLOW=0.1074E+04 BASIN STORAGE=0.5478E+00 PERCENT ERROR= 0.0

SUB50	MANE	2.23	800.72	362.10	2.62	5.00	800.71	360.00	2.61

CONTINUITY SUMMARY (AC-FT) - INFLOW=0.0000E+00 EXCESS=0.5039E+02 OUTFLOW=0.4996E+02 BASIN STORAGE=0.1552E+00 PERCENT ERROR= 0.5

SUB49	MANE	2.10	696.82	360.61	2.30	5.00	686.66	360.00	2.30

CONTINUITY SUMMARY (AC-FT) - INFLOW=0.0000E+00 EXCESS=0.4350E+02 OUTFLOW=0.4318E+02 BASIN STORAGE=0.2090E+00 PERCENT ERROR= 0.2

SUB51	MANE	4.32	1605.81	376.42	0.31	5.00	1521.80	375.00	0.31

CONTINUITY SUMMARY (AC-FT) - INFLOW=0.4322E+02 EXCESS=0.1124E+03 OUTFLOW=0.1519E+03 BASIN STORAGE=0.2954E+01 PERCENT ERROR= 0.5

SUB52	MANE	5.32	1845.56	398.61	0.51	5.00	1786.02	400.00	0.51

CONTINUITY SUMMARY (AC-FT) - INFLOW=0.1514E+03 EXCESS=0.1467E+03 OUTFLOW=0.2894E+03 BASIN STORAGE=0.6865E+01 PERCENT ERROR= 0.6

SUB53	MANE	5.00	2338.33	378.11	0.86	5.00	2337.59	380.00	0.86

CONTINUITY SUMMARY (AC-FT) - INFLOW=0.2892E+03 EXCESS=0.3006E+03 OUTFLOW=0.5712E+03 BASIN STORAGE=0.1507E+02 PERCENT ERROR= 0.6

2000	MANE	0.81	1734.58	361.88	2.53	5.00	1714.46	360.00	2.52

CONTINUITY SUMMARY (AC-FT) - INFLOW=0.0000E+00 EXCESS=0.1086E+03 OUTFLOW=0.1077E+03 BASIN STORAGE=0.2672E+00 PERCENT ERROR= 0.6

2010	MANE	1.26	1876.73	361.98	2.51	5.00	1789.85	360.00	2.50

CONTINUITY SUMMARY (AC-FT) - INFLOW=0.1077E+03 EXCESS=0.1234E+02 OUTFLOW=0.1195E+03 BASIN STORAGE=0.3409E+00 PERCENT ERROR= 0.1

2005	MANE	0.94	15817.75	366.84	156.17	5.00	15261.37	365.00	155.93

CONTINUITY SUMMARY (AC-FT) - INFLOW=0.1125E+04 EXCESS=0.1264E+02 OUTFLOW=0.1135E+04 BASIN STORAGE=0.2759E+01 PERCENT ERROR= 0.0

2011	MANE	0.43	15211.81	366.14	155.82	5.00	14664.88	365.00	156.16

CONTINUITY SUMMARY (AC-FT) - INFLOW=0.1133E+04 EXCESS=0.0000E+00 OUTFLOW=0.1133E+04 BASIN STORAGE=0.1053E+01 PERCENT ERROR= 0.0

2015	MANE	1.40	16917.49	368.26	16.97	5.00	16694.42	370.00	16.93

CONTINUITY SUMMARY (AC-FT) - INFLOW=0.1254E+04 EXCESS=0.4866E+02 OUTFLOW=0.1299E+04 BASIN STORAGE=0.2384E+01 PERCENT ERROR= 0.1

2020	MANE	0.91	255.85	359.85	2.65	5.00	255.84	360.00	2.64

CONTINUITY SUMMARY (AC-FT) - INFLOW=0.0000E+00 EXCESS=0.1544E+02 OUTFLOW=0.1539E+02 BASIN STORAGE=0.1539E-01 PERCENT ERROR= 0.2

2016	MANE	0.94	252.05	360.58	2.64	5.00	250.22	360.00	2.64

CONTINUITY SUMMARY (AC-FT) - INFLOW=0.1536E+02 EXCESS=0.0000E+00 OUTFLOW=0.1535E+02 BASIN STORAGE=0.1219E-01 PERCENT ERROR= 0.0

2030	MANE	0.84	16926.82	371.96	14.09	5.00	16447.48	370.00	14.10

CONTINUITY SUMMARY (AC-FT) - INFLOW=0.1311E+04 EXCESS=0.2638E+02 OUTFLOW=0.1336E+04 BASIN STORAGE=0.1612E+01 PERCENT ERROR= 0.0

2040	MANE	1.76	1899.61	361.85	2.46	5.00	1843.72	360.00	2.46

CONTINUITY SUMMARY (AC-FT) - INFLOW=0.0000E+00 EXCESS=0.1230E+03 OUTFLOW=0.1219E+03 BASIN STORAGE=0.3873E+00 PERCENT ERROR= 0.6

2050	MANE	1.68	1725.46	362.88	2.41	5.00	1669.15	360.00	2.41

CONTINUITY SUMMARY (AC-FT) - INFLOW=0.0000E+00 EXCESS=0.1114E+03 OUTFLOW=0.1105E+03 BASIN STORAGE=0.3249E+00 PERCENT ERROR= 0.5

2060	MANE	1.19	3780.63	362.16	2.42	5.00	3702.20	365.00	2.42

CONTINUITY SUMMARY (AC-FT) - INFLOW=0.2322E+03 EXCESS=0.1912E+02 OUTFLOW=0.2507E+03 BASIN STORAGE=0.3194E+00 PERCENT ERROR= 0.1

2070	MANE	0.85	3231.08	361.43	2.55	5.00	3178.74	360.00	2.55

CONTINUITY SUMMARY (AC-FT) - INFLOW=0.0000E+00 EXCESS=0.2008E+03 OUTFLOW=0.1994E+03 BASIN STORAGE=0.3499E+00 PERCENT ERROR= 0.5

2065	MANE	3.57	1314.21	366.36	1.00	5.00	1279.48	365.00	1.00

CONTINUITY SUMMARY (AC-FT) - INFLOW=0.6646E+02 EXCESS=0.2155E+02 OUTFLOW=0.8723E+02 BASIN STORAGE=0.4101E+00 PERCENT ERROR= 0.4

2131	MANE	1.54	2089.06	363.48	-1.00	5.00	2022.53	365.00	-1.00
2130	MANE	4.07	599.54	361.27	2.52	5.00	571.26	360.00	2.52

CONTINUITY SUMMARY (AC-FT) - INFLOW=0.0000E+00 EXCESS=0.4053E+02 OUTFLOW=0.4017E+02 BASIN STORAGE=0.2022E+00 PERCENT ERROR= 0.4

2066	MANE	1.71	621.20	368.10	1.14	5.00	618.39	365.00	1.14

CONTINUITY SUMMARY (AC-FT) - INFLOW=0.1800E+02 EXCESS=0.0000E+00 OUTFLOW=0.1815E+02 BASIN STORAGE=0.4113E-05 PERCENT ERROR= -0.8

2080	MANE	1.38	5625.34	367.07	1.73	5.00	5368.34	365.00	1.73

CONTINUITY SUMMARY (AC-FT) - INFLOW=0.3553E+03 EXCESS=0.1610E+02 OUTFLOW=0.3707E+03 BASIN STORAGE=0.6621E+00 PERCENT ERROR= 0.0

2090	MANE	3.72	21165.88	380.10	5.31	5.00	20961.59	380.00	5.33

CONTINUITY SUMMARY (AC-FT) - INFLOW=0.1707E+04 EXCESS=0.4213E+02 OUTFLOW=0.1743E+04 BASIN STORAGE=0.1170E+02 PERCENT ERROR= -0.3

2100	MANE	5.00	282.69	390.87	2.19	5.00	280.93	390.00	2.19

CONTINUITY SUMMARY (AC-FT) - INFLOW=0.0000E+00 EXCESS=0.4532E+02 OUTFLOW=0.4426E+02 BASIN STORAGE=0.8944E+00 PERCENT ERROR= 0.4

2110	MANE	2.81	21347.37	388.87	4.92	5.00	21220.45	390.00	4.92

CONTINUITY SUMMARY (AC-FT) - INFLOW=0.1793E+04 EXCESS=0.6484E+02 OUTFLOW=0.1850E+04 BASIN STORAGE=0.8916E+01 PERCENT ERROR= -0.1

2120	MANE	6.12	1044.15	398.95	2.35	5.00	1034.03	400.00	2.35

CONTINUITY SUMMARY (AC-FT) - INFLOW=0.0000E+00 EXCESS=0.1827E+03 OUTFLOW=0.1787E+03 BASIN STORAGE=0.3487E+01 PERCENT ERROR= 0.3

2135	MANE	0.72	2159.19	361.98	27.22	5.00	2118.86	365.00	27.26

CONTINUITY SUMMARY (AC-FT) - INFLOW=0.1545E+03 EXCESS=0.1555E+02 OUTFLOW=0.1697E+03 BASIN STORAGE=0.2775E+00 PERCENT ERROR= 0.0

2140	MANE	1.96	2378.21	363.75	11.81	5.00	2368.05	365.00	11.81

CONTINUITY SUMMARY (AC-FT) - INFLOW=0.1699E+03 EXCESS=0.2555E+02 OUTFLOW=0.1947E+03 BASIN STORAGE=0.5312E+00 PERCENT ERROR= 0.1

```
          2150  MANE        2.75   1331.58    363.59      2.47      5.00   1283.48    365.00        2.47

CONTINUITY SUMMARY (AC-FT) - INFLOW=0.0000E+00 EXCESS=0.9120E+02 OUTFLOW=0.9051E+02 BASIN STORAGE=0.2603E+00 PERCENT ERROR=   0.5

          2160  MANE        4.14   5078.80    372.66      3.90      5.00   4842.26    375.00        3.89

CONTINUITY SUMMARY (AC-FT) - INFLOW=0.2852E+03 EXCESS=0.1333E+03 OUTFLOW=0.4129E+03 BASIN STORAGE=0.2501E+01 PERCENT ERROR=   0.8

          2170  MANE        5.45    593.06    372.08      2.31      5.00    579.95    370.00        2.31

CONTINUITY SUMMARY (AC-FT) - INFLOW=0.0000E+00 EXCESS=0.5807E+02 OUTFLOW=0.5720E+02 BASIN STORAGE=0.6588E+00 PERCENT ERROR=   0.4

          2180  MANE        1.87   2253.36    361.16      2.69      5.00   2206.37    360.00        2.69

CONTINUITY SUMMARY (AC-FT) - INFLOW=0.0000E+00 EXCESS=0.1453E+03 OUTFLOW=0.1439E+03 BASIN STORAGE=0.3919E+00 PERCENT ERROR=   0.7

          2190  MANE        1.63   2386.18    364.08      2.65      5.00   2344.10    365.00        2.64

CONTINUITY SUMMARY (AC-FT) - INFLOW=0.1439E+03 EXCESS=0.1591E+02 OUTFLOW=0.1591E+03 BASIN STORAGE=0.3048E+00 PERCENT ERROR=   0.2

          2200  MANE        2.44    490.65    360.52      2.37      5.00    483.44    360.00        2.38

CONTINUITY SUMMARY (AC-FT) - INFLOW=0.0000E+00 EXCESS=0.3233E+02 OUTFLOW=0.3206E+02 BASIN STORAGE=0.1829E+00 PERCENT ERROR=   0.3

          2210  MANE        2.93   3446.41    363.44      2.36      5.00   3355.21    365.00        2.36

CONTINUITY SUMMARY (AC-FT) - INFLOW=0.0000E+00 EXCESS=0.2259E+03 OUTFLOW=0.2236E+03 BASIN STORAGE=0.7673E+00 PERCENT ERROR=   0.7

          2220  MANE        2.83   6874.65    369.59      2.38      5.00   6807.79    370.00        2.38

CONTINUITY SUMMARY (AC-FT) - INFLOW=0.4142E+03 EXCESS=0.6370E+02 OUTFLOW=0.4734E+03 BASIN STORAGE=0.1886E+01 PERCENT ERROR=   0.5

          2230  MANE        3.32    565.80    361.86      2.30      5.00    538.71    360.00        2.30

CONTINUITY SUMMARY (AC-FT) - INFLOW=0.0000E+00 EXCESS=0.4084E+02 OUTFLOW=0.4044E+02 BASIN STORAGE=0.2766E+00 PERCENT ERROR=   0.3

          2221  MANE        0.96    538.08    362.50      2.30      5.00    535.75    365.00        2.30

CONTINUITY SUMMARY (AC-FT) - INFLOW=0.4045E+02 EXCESS=0.0000E+00 OUTFLOW=0.4043E+02 BASIN STORAGE=0.4509E-01 PERCENT ERROR=   0.0
```

```
2240  MANE        4.45    988.73    364.63      2.32      5.00    976.58    365.00        2.32

CONTINUITY SUMMARY (AC-FT) - INFLOW=0.0000E+00 EXCESS=0.7521E+02 OUTFLOW=0.7463E+02 BASIN STORAGE=0.4090E+00 PERCENT ERROR=   0.2

2260  MANE        5.78    398.60    363.64      2.31      5.00    393.61    365.00        2.31

CONTINUITY SUMMARY (AC-FT) - INFLOW=0.0000E+00 EXCESS=0.3295E+02 OUTFLOW=0.3258E+02 BASIN STORAGE=0.2515E+00 PERCENT ERROR=   0.4

2255  MANE        1.63    565.74    361.73      2.38      5.00    552.65    360.00        2.38

CONTINUITY SUMMARY (AC-FT) - INFLOW=0.0000E+00 EXCESS=0.3778E+02 OUTFLOW=0.3749E+02 BASIN STORAGE=0.9236E-01 PERCENT ERROR=   0.5

2270  MANE        1.22   1901.96    362.10      2.34      5.00   1876.36    360.00        2.34

CONTINUITY SUMMARY (AC-FT) - INFLOW=0.0000E+00 EXCESS=0.1219E+03 OUTFLOW=0.1213E+03 BASIN STORAGE=0.2855E+00 PERCENT ERROR=   0.3

2250  MANE        1.49   2882.85    362.36      2.39      5.00   2737.03    360.00        2.38

CONTINUITY SUMMARY (AC-FT) - INFLOW=0.1588E+03 EXCESS=0.3184E+02 OUTFLOW=0.1900E+03 BASIN STORAGE=0.3858E+00 PERCENT ERROR=   0.1

2280  MANE        1.12   3360.88    363.46      2.35      5.00   3341.55    365.00        2.35

CONTINUITY SUMMARY (AC-FT) - INFLOW=0.2222E+03 EXCESS=0.2130E+02 OUTFLOW=0.2426E+03 BASIN STORAGE=0.5574E+00 PERCENT ERROR=   0.1

2290  MANE        3.05   1214.44    361.83      2.56      5.00   1162.14    360.00        2.56

CONTINUITY SUMMARY (AC-FT) - INFLOW=0.0000E+00 EXCESS=0.8277E+02 OUTFLOW=0.8194E+02 BASIN STORAGE=0.5347E+00 PERCENT ERROR=   0.3

2300  MANE        2.62   3781.98    363.62      2.50      5.00   3635.56    365.00        2.51

CONTINUITY SUMMARY (AC-FT) - INFLOW=0.0000E+00 EXCESS=0.2434E+03 OUTFLOW=0.2405E+03 BASIN STORAGE=0.1220E+01 PERCENT ERROR=   0.7

2310  MANE        2.67   2255.95    365.33      1.41      5.00   2219.27    365.00        1.41

CONTINUITY SUMMARY (AC-FT) - INFLOW=0.1204E+03 EXCESS=0.3984E+02 OUTFLOW=0.1583E+03 BASIN STORAGE=0.8842E+00 PERCENT ERROR=   0.6

2320  MANE        2.47    705.78    360.45      2.36      5.00    698.78    360.00        2.36

CONTINUITY SUMMARY (AC-FT) - INFLOW=0.0000E+00 EXCESS=0.4715E+02 OUTFLOW=0.4678E+02 BASIN STORAGE=0.2555E+00 PERCENT ERROR=   0.2
```

```
2331  MANE        1.05   1808.94   366.56    -1.00     5.00   1798.89   365.00     -1.00

2330  MANE        1.64    997.74   361.40     2.42     5.00    979.96   360.00      2.42

CONTINUITY SUMMARY (AC-FT) - INFLOW=0.0000E+00 EXCESS=0.6257E+02 OUTFLOW=0.6210E+02 BASIN STORAGE=0.1714E+00 PERCENT ERROR=   0.5

2335  MANE        3.33   3039.72   366.86     5.13     5.00   2993.45   370.00      5.13

CONTINUITY SUMMARY (AC-FT) - INFLOW=0.1820E+03 EXCESS=0.4794E+02 OUTFLOW=0.2279E+03 BASIN STORAGE=0.8764E+00 PERCENT ERROR=   0.5

2340  MANE        2.32    624.90   359.95     2.94     5.00    624.57   360.00      2.94

CONTINUITY SUMMARY (AC-FT) - INFLOW=0.0000E+00 EXCESS=0.4374E+02 OUTFLOW=0.4349E+02 BASIN STORAGE=0.1836E+00 PERCENT ERROR=   0.1

2125  MANE        2.78    189.38   360.23     3.45     5.00    189.18   360.00      3.45

CONTINUITY SUMMARY (AC-FT) - INFLOW=0.0000E+00 EXCESS=0.1366E+02 OUTFLOW=0.1360E+02 BASIN STORAGE=0.4423E-01 PERCENT ERROR=   0.1

2126  MANE        1.58    531.19   366.35     6.50     5.00    530.77   365.00      6.50

CONTINUITY SUMMARY (AC-FT) - INFLOW=0.5132E+02 EXCESS=0.0000E+00 OUTFLOW=0.5127E+02 BASIN STORAGE=0.7449E-01 PERCENT ERROR=  -0.1


** NORMAL END OF HEC-1 ***


-----DSS---ZCLOSE Unit:  71,   File: MP924I.DSS
          Pointer Utilization:  0.25
          Number of Records:      3
          File Size:     15.4  Kbytes
          Percent Inactive:   0.0
```

APPENDIX C - CULVERTS - HYDRAULIC PERFORMANCE

CURRENT DATE: 06-28-1994
CURRENT TIME: 13:39:52

FILE DATE: 1/25/94
FILE NAME: OL38R2

FHWA CULVERT ANALYSIS
HY-8, VERSION 4.1

CULV #	SITE DATA: INLET ELEV. (FT)	SITE DATA: OUTLET ELEV. (FT)	SITE DATA: CULVERT LENGTH (FT)	CULVERT SHAPE, MATERIAL, INLET: BARRELS SHAPE MATERIAL	SPAN (FT)	RISE (FT)	MANNING n	INLET TYPE
1	1595.00	1594.00	400.00	1 RCB	10.00	6.00	.012	CONVENTIONAL
2								
3								
4								
5								
6								

SUMMARY OF CULVERT FLOWS (CFS) FILE: OL38R2 DATE: 1/25/94

ELEV (FT)	TOTAL	1	2	3	4	5	6	ROADWAY	ITR
1595.00	0	0	0	0	0	0	0	0	1
1597.12	80	80	0	0	0	0	0	0	1
1598.39	160	160	0	0	0	0	0	0	1
1599.43	240	240	0	0	0	0	0	0	1
1600.35	320	320	0	0	0	0	0	0	1
1601.20	400	400	0	0	0	0	0	0	1
1601.99	480	480	0	0	0	0	0	0	1
1602.74	560	560	0	0	0	0	0	0	1
1603.75	640	640	0	0	0	0	0	0	1
1604.75	720	720	0	0	0	0	0	0	1
1605.86	800	800	0	0	0	0	0	0	1
1606.00	809	809	0	0	0	0	0	OVERTOPPING	

SUMMARY OF ITERATIVE SOLUTION ERRORS FILE: OL38R2 DATE: 1/25/94

HEAD ELEV(FT)	HEAD ERROR(FT)	TOTAL FLOW(CFS)	FLOW ERROR(CFS)	% FLOW ERROR
1595.00	0.00	0	0	0.00
1597.12	0.00	80	0	0.00
1598.39	0.00	160	0	0.00
1599.43	0.00	240	0	0.00
1600.35	0.00	320	0	0.00
1601.20	0.00	400	0	0.00
1601.99	0.00	480	0	0.00
1602.74	0.00	560	0	0.00
1603.75	0.00	640	0	0.00
1604.75	0.00	720	0	0.00
1605.86	0.00	800	0	0.00

<1> TOLERANCE (FT) = 0.010 <2> TOLERANCE (%) = 1.000

CURRENT DATE: 06-28-1994 FILE DATE: 1/25/94
CURRENT TIME: 13:39:52 FILE NAME: OL38R2

PERFORMANCE CURVE FOR CULVERT # 1 - 1 (10 BY 6) RCB

DIS-CHARGE FLOW (cfs)	HEAD-WATER ELEV. (ft)	INLET CONTROL DEPTH (ft)	OUTLET CONTROL DEPTH (ft)	FLOW TYPE <F4>	NORMAL DEPTH (ft)	CRITICAL DEPTH (ft)	OUTLET VEL. (fps)	OUTLET DEPTH (ft)	TAILWATER VEL. (fps)	TAILWATER DEPTH (ft)
0	1595.00	0.00	0.00	0-NF	0.00	0.00	0.00	0.00	0.00	0.90
80	1597.12	1.93	2.12	3-M1t	1.27	1.26	5.00	1.60	5.17	1.60
160	1598.39	3.06	3.39	2-M2c	2.01	2.00	8.00	2.00	6.59	1.95
240	1599.43	4.03	4.43	2-M2c	2.67	2.62	9.16	2.62	7.55	2.22
320	1600.35	4.89	5.35	2-M2c	3.27	3.18	10.08	3.18	8.30	2.46
400	1601.20	5.71	6.20	2-M2c	3.84	3.68	10.86	3.68	8.92	2.67
480	1601.99	6.55	6.99	2-M2c	4.39	4.16	11.54	4.16	9.45	2.86
560	1602.74	7.45	7.74	2-M2c	4.92	4.61	12.15	4.61	9.92	3.04
640	1603.75	8.44	8.75	6-FFn	6.00	5.04	10.67	6.00	10.34	3.20
720	1604.75	9.55	9.75	6-FFn	6.00	5.45	12.00	6.00	10.72	3.35
800	1605.86	10.80	10.86	6-FFn	6.00	5.85	13.33	6.00	11.06	3.50

El. inlet face invert 1595.00 ft El. outlet invert 1594.00 ft
El. inlet throat invert 0.00 ft El. inlet crest 0.00 ft

***** SITE DATA ***** CULVERT INVERT **********

INLET STATION (FT)	0.00
INLET ELEVATION (FT)	1595.00
OUTLET STATION (FT)	400.00
OUTLET ELEVATION (FT)	1594.00
NUMBER OF BARRELS	1
SLOPE (V-FT/H-FT)	0.0025
CULVERT LENGTH ALONG SLOPE (FT)	400.00

***** CULVERT DATA SUMMARY **********

BARREL SHAPE	BOX
BARREL SPAN	10.00 FT
BARREL RISE	6.00 FT
BARREL MATERIAL	CONCRETE
BARREL MANNING'S N	0.012
INLET TYPE	CONVENTIONAL
INLET EDGE AND WALL	SQUARE EDGE (30-75 DEG. FLARE)
INLET DEPRESSION	NONE

CURRENT DATE: 06-28-1994
CURRENT TIME: 13:40:34

FILE DATE: 01/26/94
FILE NAME: OL53R

FHWA CULVERT ANALYSIS
HY-8, VERSION 4.1

CULV #	SITE DATA: INLET ELEV. (FT)	OUTLET ELEV. (FT)	CULVERT LENGTH (FT)	CULVERT SHAPE, MATERIAL, INLET: BARRELS SHAPE MATERIAL	SPAN (FT)	RISE (FT)	MANNING n	INLET TYPE
1	1592.00	1590.50	410.00	2 RCB	10.00	10.00	.012	CONVENTIONAL
2								
3								
4								
5								
6								

SUMMARY OF CULVERT FLOWS (CFS) FILE: OL53R DATE: 01/26/94

ELEV (FT)	TOTAL	1	2	3	4	5	6	ROADWAY	ITR
1592.00	0	0	0	0	0	0	0	0	1
1594.52	250	250	0	0	0	0	0	0	1
1596.00	500	500	0	0	0	0	0	0	1
1597.26	750	750	0	0	0	0	0	0	1
1598.45	1000	1000	0	0	0	0	0	0	1
1599.57	1250	1250	0	0	0	0	0	0	1
1600.63	1500	1500	0	0	0	0	0	0	1
1601.68	1750	1750	0	0	0	0	0	0	1
1602.72	2000	2000	0	0	0	0	0	0	1
1603.78	2250	2250	0	0	0	0	0	0	1
1604.88	2500	2500	0	0	0	0	0	0	1
1605.00	2524	2524	0	0	0	0	0	OVERTOPPING	

SUMMARY OF ITERATIVE SOLUTION ERRORS FILE: OL53R DATE: 01/26/94

HEAD ELEV(FT)	HEAD ERROR(FT)	TOTAL FLOW(CFS)	FLOW ERROR(CFS)	% FLOW ERROR
1592.00	0.00	0	0	0.00
1594.52	0.00	250	0	0.00
1596.00	0.00	500	0	0.00
1597.26	0.00	750	0	0.00
1598.45	0.00	1000	0	0.00
1599.57	0.00	1250	0	0.00
1600.63	0.00	1500	0	0.00
1601.68	0.00	1750	0	0.00
1602.72	0.00	2000	0	0.00
1603.78	0.00	2250	0	0.00
1604.88	0.00	2500	0	0.00

<1> TOLERANCE (FT) = 0.010 <2> TOLERANCE (%) = 1.000

CURRENT DATE: 06-28-1994 FILE DATE: 01/26/94
CURRENT TIME: 13:40:34 FILE NAME: OL53R

PERFORMANCE CURVE FOR CULVERT # 1 - 2 (10 BY 10) RCB

DIS-CHARGE FLOW (cfs)	HEAD-WATER ELEV. (ft)	INLET CONTROL DEPTH (ft)	OUTLET CONTROL DEPTH (ft)	FLOW TYPE <F4>	NORMAL DEPTH (ft)	CRITICAL DEPTH (ft)	OUTLET VEL. (fps)	OUTLET DEPTH (ft)	TAILWATER VEL. (fps)	TAILWATER DEPTH (ft)
0	1592.00	0.00	0.00	0-NF	0.00	0.00	0.00	0.00	0.00	0.00
250	1594.52	2.52	2.52	1-S2n	1.47	1.70	8.49	1.47	3.03	0.98
500	1596.00	4.00	4.00	1-S2n	2.39	2.69	10.45	2.39	3.92	1.48
750	1597.26	5.26	5.26	1-S2n	3.19	3.53	11.74	3.19	4.55	1.88
1000	1598.45	6.45	6.45	1-S2n	3.93	4.28	12.71	3.93	5.04	2.23
1250	1599.57	7.57	7.57	1-S2n	4.63	4.96	13.49	4.63	5.46	2.54
1500	1600.63	8.63	8.63	1-S2n	5.31	5.60	14.12	5.31	5.82	2.82
1750	1601.68	9.68	9.68	1-S2n	5.98	6.21	14.64	5.98	6.14	3.09
2000	1602.72	10.72	10.72	5-S2n	6.63	6.79	15.09	6.63	6.42	3.34
2250	1603.78	11.78	11.78	5-S2n	7.27	7.34	15.48	7.27	6.68	3.57
2500	1604.88	12.88	12.57	2-M2c	7.90	7.88	15.87	7.88	6.93	3.79

El. inlet face invert 1592.00 ft El. outlet invert 1590.50 ft
El. inlet throat invert 0.00 ft El. inlet crest 0.00 ft

***** SITE DATA ***** CULVERT INVERT **********

INLET STATION (FT)	0.00
INLET ELEVATION (FT)	1592.00
OUTLET STATION (FT)	410.00
OUTLET ELEVATION (FT)	1590.50
NUMBER OF BARRELS	2
SLOPE (V-FT/H-FT)	0.0037
CULVERT LENGTH ALONG SLOPE (FT)	410.00

***** CULVERT DATA SUMMARY **********

BARREL SHAPE	BOX
BARREL SPAN	10.00 FT
BARREL RISE	10.00 FT
BARREL MATERIAL	CONCRETE
BARREL MANNING'S N	0.012
INLET TYPE	CONVENTIONAL
INLET EDGE AND WALL	BEVELED EDGE (1.5:1)
INLET DEPRESSION	NONE

CURRENT DATE: 06-28-1994 FILE DATE: 01/26/94
CURRENT TIME: 13:40:34 FILE NAME: OL53R

TAILWATER

******* REGULAR CHANNEL CROSS SECTION **********

BOTTOM WIDTH (FT)	80.00
SIDE SLOPE H/V (X:1)	4.0
CHANNEL SLOPE V/H (FT/FT)	0.003
MANNING'S N (.01-0.1)	0.027
CHANNEL INVERT ELEVATION (FT)	1590.50
CULVERT NO.1 OUTLET INVERT ELEVATION	1590.50 FT

******* UNIFORM FLOW RATING CURVE FOR DOWNSTREAM CHANNEL

FLOW (CFS)	W.S.E. (FT)	FROUDE NUMBER	DEPTH (FT)	VEL. (FPS)	SHEAR (PSF)
0.00	1590.50	0.000	0.00	0.00	0.00
250.00	1591.48	0.538	0.98	3.03	0.20
500.00	1591.98	0.568	1.48	3.92	0.31
750.00	1592.38	0.584	1.88	4.55	0.39
1000.00	1592.73	0.595	2.23	5.04	0.46
1250.00	1593.04	0.604	2.54	5.46	0.52
1500.00	1593.32	0.610	2.82	5.82	0.58
1750.00	1593.59	0.615	3.09	6.14	0.64
2000.00	1593.84	0.620	3.34	6.42	0.69
2250.00	1594.07	0.623	3.57	6.68	0.74
2500.00	1594.29	0.627	3.79	6.93	0.78

ROADWAY OVERTOPPING DATA

WEIR COEFFICIENT	2.80
EMBANKMENT TOP WIDTH (FT)	0.00
CREST LENGTH (FT)	800.00
OVERTOPPING CREST ELEVATION (FT)	1605.00

CURRENT DATE: 06-28-1994 FILE DATE: 01/26/94
CURRENT TIME: 13:42:20 FILE NAME: OLPIMA

PERFORMANCE CURVE FOR CULVERT # 1 - 4 (8 BY 3) RCB

DIS-CHARGE FLOW (cfs)	HEAD-WATER ELEV. (ft)	INLET CONTROL DEPTH (ft)	OUTLET CONTROL DEPTH (ft)	FLOW TYPE <F4>	NORMAL DEPTH (ft)	CRITICAL DEPTH (ft)	OUTLET VEL. (fps)	OUTLET DEPTH (ft)	TAILWATER VEL. (fps)	TAILWATER DEPTH (ft)
0	1592.50	0.00	0.50	0-NF	0.00	0.00	0.00	0.00	0.00	2.50
38	1592.54	0.54	0.54	1-S2n	0.19	0.35	6.12	0.19	0.00	2.50
76	1592.85	0.85	0.85	1-S2n	0.34	0.56	6.92	0.34	0.00	2.50
114	1593.11	1.11	1.11	1-S2n	0.44	0.73	8.12	0.44	0.00	2.50
152	1593.35	1.35	1.35	1-S2n	0.53	0.89	8.70	0.55	0.00	2.50
190	1593.57	1.57	1.57	1-S2n	0.62	1.03	9.54	0.62	0.00	2.50
228	1593.78	1.78	1.78	1-S2n	0.69	1.17	9.98	0.71	0.00	2.50
266	1593.97	1.97	1.97	1-S2n	0.77	1.29	10.84	0.77	0.00	2.50
304	1594.16	2.16	2.16	1-S2n	0.84	1.41	10.93	0.87	0.00	2.50
342	1594.34	2.34	2.34	1-S2n	0.91	1.53	11.31	0.95	0.00	2.50
380	1594.51	2.51	2.51	1-S2n	0.97	1.64	11.69	1.02	0.00	2.50

El. inlet face invert 1592.00 ft El. outlet invert 1590.00 ft
El. inlet throat invert 0.00 ft El. inlet crest 0.00 ft

***** SITE DATA ***** CULVERT INVERT **********

INLET STATION (FT)	0.00
INLET ELEVATION (FT)	1592.00
OUTLET STATION (FT)	150.00
OUTLET ELEVATION (FT)	1590.00
NUMBER OF BARRELS	4
SLOPE (V-FT/H-FT)	0.0133
CULVERT LENGTH ALONG SLOPE (FT)	150.01

***** CULVERT DATA SUMMARY **********

BARREL SHAPE	BOX
BARREL SPAN	8.00 FT
BARREL RISE	3.00 FT
BARREL MATERIAL	CONCRETE
BARREL MANNING'S N	0.012
INLET TYPE	CONVENTIONAL
INLET EDGE AND WALL	SQUARE EDGE (30-75 DEG. FLARE)
INLET DEPRESSION	NONE

CURRENT DATE: 06-28-1994
CURRENT TIME: 13:42:20

FILE DATE: 01/26/94
FILE NAME: OLPIMA

---------- TAILWATER ----------

CONSTANT WATER SURFACE ELEVATION
1592.50

---------- ROADWAY OVERTOPPING DATA ----------

ROADWAY SURFACE	PAVED
EMBANKMENT TOP WIDTH (FT)	150.00
CREST LENGTH (FT)	100.00
OVERTOPPING CREST ELEVATION (FT)	1595.00

CURRENT DATE: 06-28-1994 FILE DATE: 01/27/94
CURRENT TIME: 13:42:57 FILE NAME: OLSCTT

FHWA CULVERT ANALYSIS
HY-8, VERSION 4.1

CULV #	SITE DATA: INLET ELEV. (FT)	OUTLET ELEV. (FT)	CULVERT LENGTH (FT)	CULVERT SHAPE, MATERIAL, INLET: BARRELS SHAPE MATERIAL	SPAN (FT)	RISE (FT)	MANNING n	INLET TYPE
1	1630.00	1628.00	100.02	2 RCB	10.00	4.00	.012	CONVENTIONAL
2								
3								
4								
5								
6								

SUMMARY OF CULVERT FLOWS (CFS) FILE: OLSCTT DATE: 01/27/94

ELEV (FT)	TOTAL	1	2	3	4	5	6	ROADWAY	ITR
1630.00	0	0	0	0	0	0	0	0	1
1631.05	66	66	0	0	0	0	0	0	1
1631.67	132	132	0	0	0	0	0	0	1
1632.19	198	198	0	0	0	0	0	0	1
1632.67	264	264	0	0	0	0	0	0	1
1633.11	330	330	0	0	0	0	0	0	1
1633.53	396	396	0	0	0	0	0	0	1
1633.94	462	462	0	0	0	0	0	0	1
1634.37	528	528	0	0	0	0	0	0	1
1634.82	594	594	0	0	0	0	0	0	1
1635.16	660	641	0	0	0	0	0	16	4
1635.00	619	619	0	0	0	0	0	OVERTOPPING	

SUMMARY OF ITERATIVE SOLUTION ERRORS FILE: OLSCTT DATE: 01/27/94

HEAD ELEV(FT)	HEAD ERROR(FT)	TOTAL FLOW(CFS)	FLOW ERROR(CFS)	% FLOW ERROR
1630.00	0.00	0	0	0.00
1631.05	0.00	66	0	0.00
1631.67	0.00	132	0	0.00
1632.19	0.00	198	0	0.00
1632.67	0.00	264	0	0.00
1633.11	0.00	330	0	0.00
1633.53	0.00	396	0	0.00
1633.94	0.00	462	0	0.00
1634.37	0.00	528	0	0.00
1634.82	0.00	594	0	0.00
1635.16	-0.01	660	3	0.48

<1> TOLERANCE (FT) = 0.010 <2> TOLERANCE (%) = 1.000

SCOTTSDALE ROAD

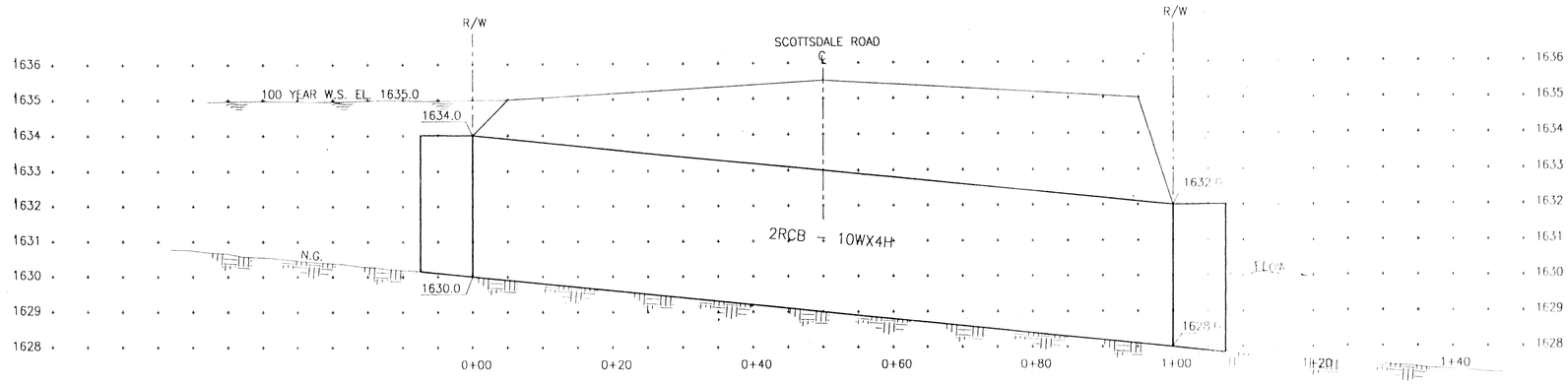

VERTICAL 1" = 2'
HORIZONTAL 1" = 10'

SECTION E-E

PIMA ROAD

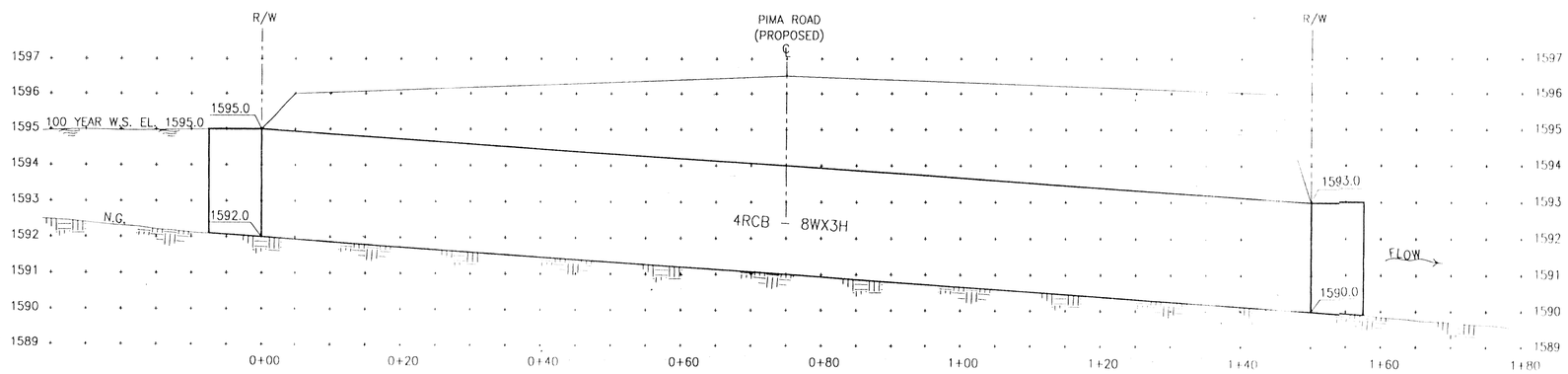

VERTICAL 1" = 2'
HORIZONTAL 1" = 10'

SECTION F-F

GILBERTSON ASSOCIATES, INC.
CONSULTING CIVIL ENGINEERS AND SURVEYORS
21733 N. SCOTTSDALE RD., SUITE 6
SCOTTSDALE, ARIZONA 85255
(602) 585-6464

PLATE 3

SCOTTSDALE ROAD
AND PIMA ROAD
OUTER LOOP FREEWAY CROSSINGS

Date JANUARY 1994	Job No. 23019	Sheet 1 of 2

FILE NAME: D:\2301\19PLUS1
MACHINE NUMBER: 1
DATE PLOTTED: 10-03-94

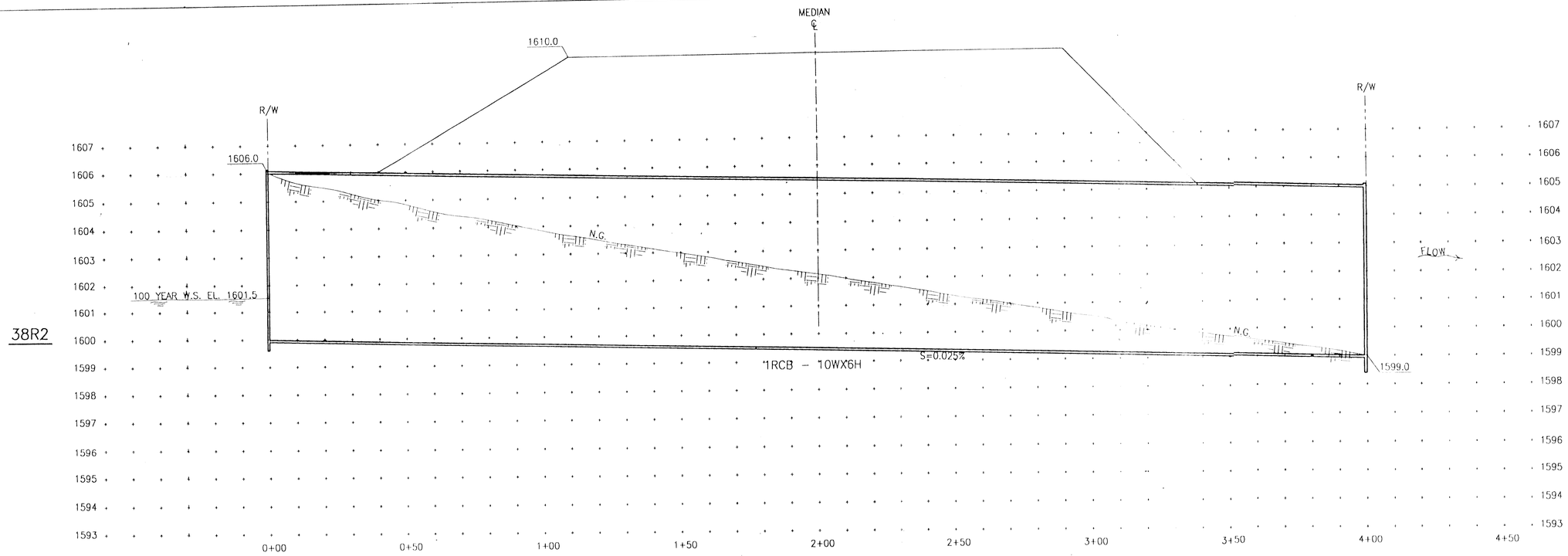

VERTICAL 1"=2'
HORIZONTAL 1"=20'

SECTION B-B

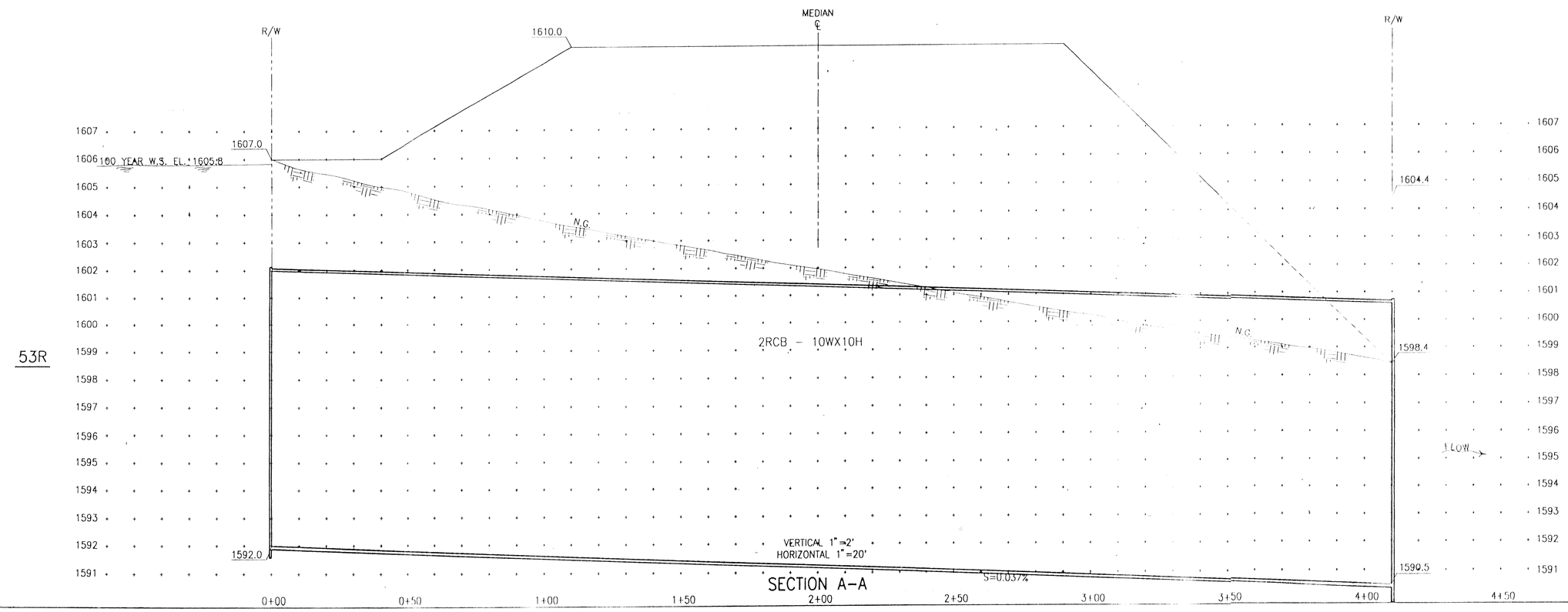

VERTICAL 1"=2'
HORIZONTAL 1"=20'

SECTION A-A

FILE NAME: D:\230\19PL352
MACHINE NUMBER: 8
DATE PLOTTED: 10-03-94

GILBERTSON ASSOCIATES, INC.
CONSULTING CIVIL ENGINEERS AND SURVEYORS
2733 N. SCOTTSDALE RD., SUITE B
SCOTTSDALE, ARIZONA 85255
(602) 585-6464

PLATE 3

38R2 AND 53R
OUTER LOOP FREEWAY CROSSINGS

Date JANUARY 1994	Job No. 23019	Sheet 2 of 2

GILBERTSON ASSOCIATES, INC.
CONSULTING CIVIL ENGINEERS AND SURVEYORS
23733 N. SCOTTSDALE RD., SUITE B
SCOTTSDALE, ARIZONA 85255
(602) 585-6464

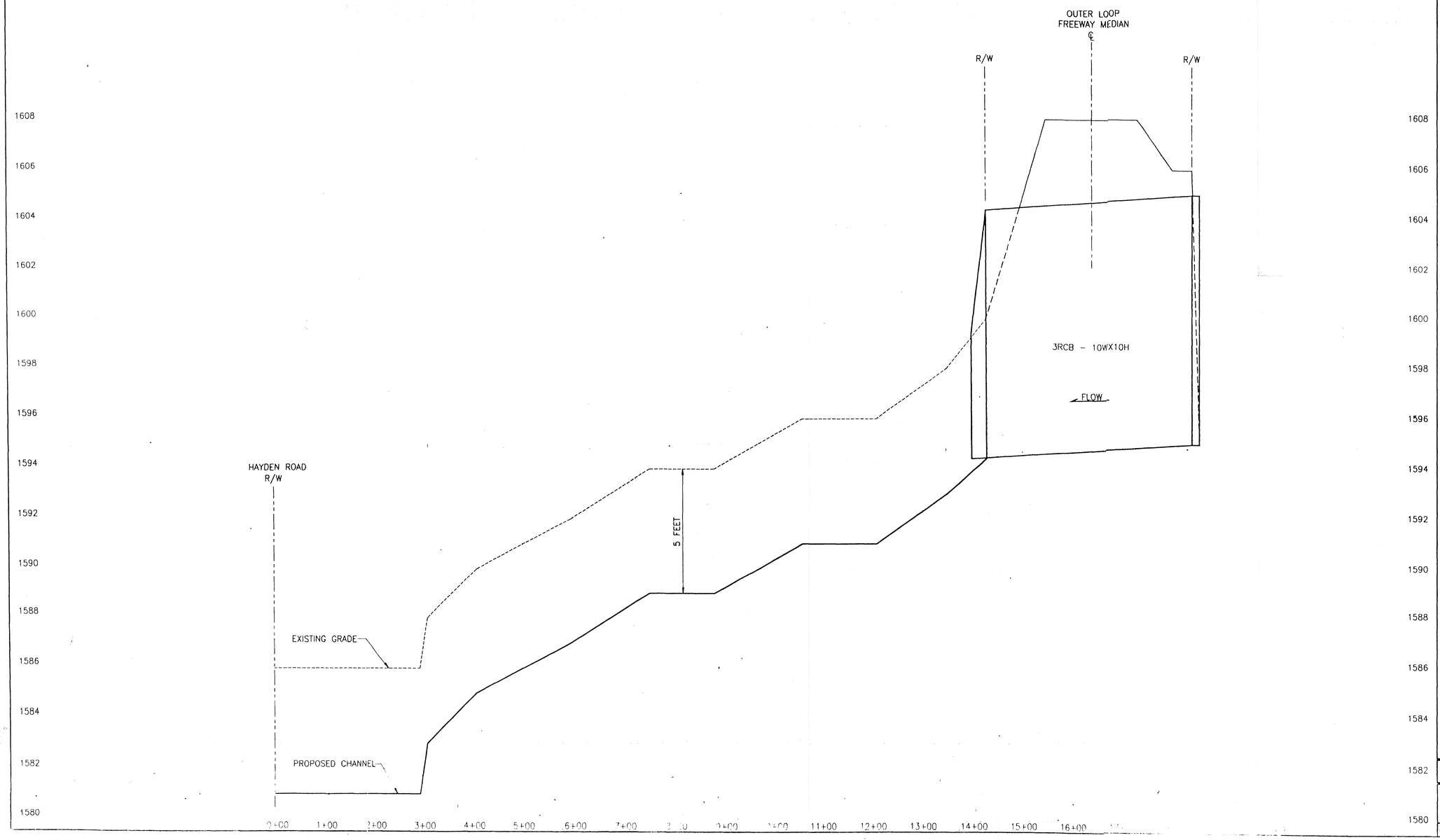

SCALE: 1" = 100' HORIZONTAL
1" = 2' VERTICAL

0' 100' 200' 300'

PLATE 4

UNION HILLS CHANNEL PROFILE
OUTER LOOP FREEWAY CROSSINGS

Date FEBRUARY, 1994 | Job No. 23619 | Sheet 1 of 2

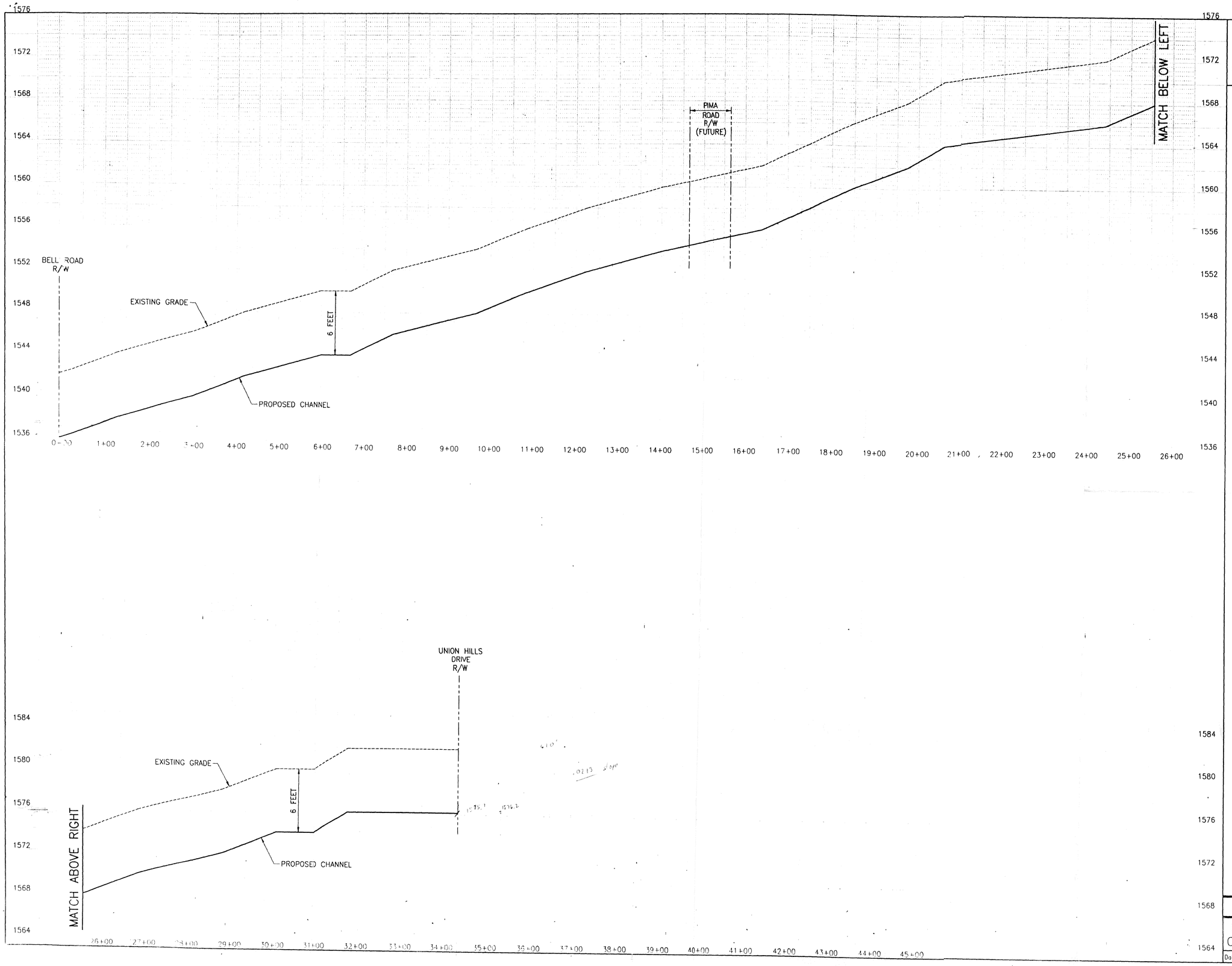

GILBERTSON ASSOCIATES, INC.
CONSULTING CIVIL ENGINEERS AND SURVEYORS
23733 N. SCOTTSDALE RD., SUITE B
SCOTTSDALE, ARIZONA 85255
(602) 585-6464

SCALE: 1" = 100' HORIZONTAL
1" = 4' VERTICAL
0' 100' 200' 300'

PLATE 4

HAYDEN ROAD CHANNEL PROFILE
OUTER LOOP FREEWAY CROSSINGS

Date FEBRUARY, 1994 | Job No. 23019 | Sheet 2 of 2