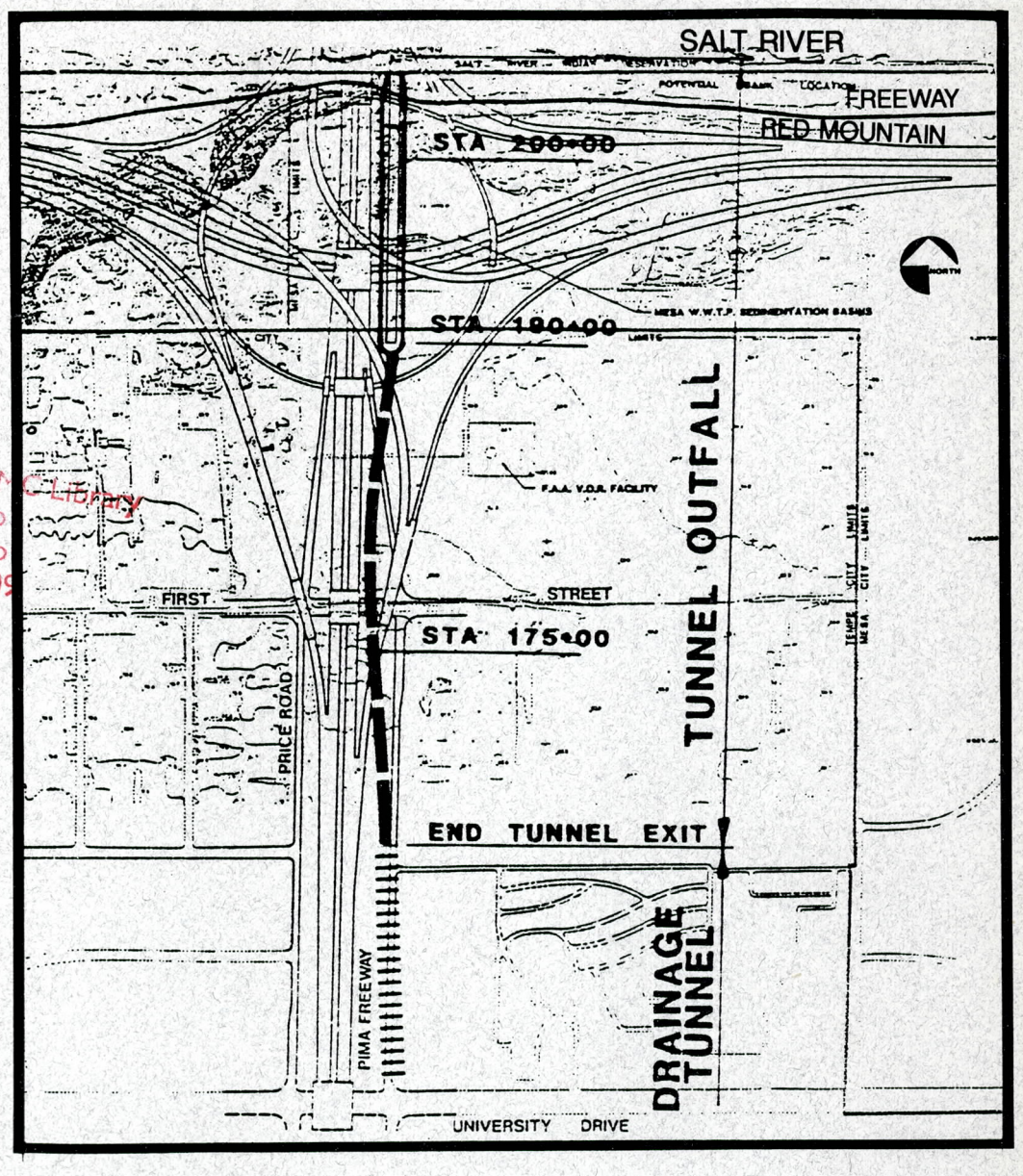

Property of
Flood Control District of Maricopa County
Please Return to
2801 W. Durango
Phoenix, AZ 85009

OUTER LOOP HIGHWAY SR 360 INTERCHANGE

VOLUME II

APPENDICES

FINAL HYDRAULIC REPORT FOR PRICE ROAD TUNNEL SYSTEM

PREPARED FOR

ARIZONA DEPARTMENT OF TRANSPORTATION

AUGUST, 1989

HNTB

HOWARD NEEDLES TAMMEN & BERGENDOFF
ARCHITECTS ENGINEERS PLANNERS
ANCHOR CENTRE TWO
2207 EAST CAMELBACK ROAD, SUITE 400
PHOENIX, ARIZONA 85016
(602) 954-7420

OUTER LOOP HIGHWAY
SR 360 INTERCHANGE

FINAL HYDRAULIC REPORT
FOR
PRICE ROAD TUNNEL SYSTEM
VOLUME II

PREPARED FOR
ARIZONA DEPARTMENT OF TRANSPORTATION
HIGHWAYS DIVISION
AND
DELEUW CATHER COMPANY
(MANAGEMENT CONSULTANT)

AUGUST, 1989

HOWARD NEEDLES TAMMEN & BERGENDOFF
ARCHITECTS ENGINEERS PLANNERS
ANCHOR CENTRE TWO, SUITE 400
PHOENIX, ARIZONA 85016

Registered Professional Engineer (Civil)
CERTIFICATE NO.
15282
ROBERT W.
LUSCOMBE
Date Signed 31 Aug 89
ARIZONA, U.S.A.

TABLE OF CONTENTS

SECTION NO.	TITLE	PAGE NO.
I.	INTRODUCTION	VOLUME I
II.	HYDROLOGY MODEL	VOLUME I
III.	SYSTEM HYDRAULICS	VOLUME I
IV.	OUTFALL ALTERNATIVES HYDRAULIC ANALYSIS	VOLUME I
V.	REFERENCES	VOLUME I
	EXHIBITS	VOLUME I
	APPENDICES	VOLUME II

A. HEC-1 Hydrology Model
HNTB - May 1989

B. Red Mountain Freeway Offsite Hydrology HEC-1 Model Simons, Li and Associates - April 1989

- 100-Year Flood Event, Concentration Point A
- 100-Year Flood Event, Concentration Points B,C and D

C. Interim Conditions Hydrology
HNTB - November 1988

- 10-Year Event HEC-1 Model
- 50-Year Event HEC-1 Model
- 100-Year Event HEC-1 Model

D. Outer Loop Highway SR360 Interchange Hydrology Study
HNTB - October 1986

- Part 1 Report
- Part 2 Report

E. Outfall Alternatives Hydraulic Analysis
HNTB - July 1989

- Alternative 1 HEC-2 Model
- Alternative 2 HEC-2 Model
- Alternative 3 HEC-3 Model

F. Drop Structures A and B Design Calculations
HNTB - June 1987

Registered Professional Engineer (Civil)
CERTIFICATE NO. 15282
ROBERT W. LUSCOMBE
Date Signed 31 Aug 89
ARIZONA, U.S.A.

DIIGS/sc/7/

APPENDIX A

HEC-1 HYDROLOGY MODEL
UPDATED MAY 1989

```
****************************************
*                                      *
*   FLOOD HYDROGRAPH PACKAGE  (HEC-1)  *
*            FEBRUARY 1981             *
*          REVISED 31 JAN 85           *
*                                      *
* RUN DATE      27-J    TIME      15:5 *
*                                      *
****************************************
```

```
****************************************
*                                      *
*    U.S. ARMY CORPS OF ENGINEERS      *
*  THE HYDROLOGIC ENGINEERING CENTER   *
*          609 SECOND STREET           *
*       DAVIS, CALIFORNIA 95616        *
*  (916) 440-3285 OR (FTS) 448-3285    *
*                                      *
****************************************
```

```
X     X  XXXXXXX   XXXXX          X
X     X  X       X     X        XX
X     X  X       X               X
XXXXXXX  XXXX    X       XXXXX   X
X     X  X       X               X
X     X  X       X     X         X
X     X  XXXXXXX   XXXXX         XXX
```

THIS PROGRAM REPLACES ALL PREVIOUS VERSIONS OF HEC-1 KNOWN AS HEC1 (JAN 73), HEC1GS, HEC1DB, AND HEC1KW.

THE DEFINITIONS OF VARIABLES -RTIMP- AND -RTIOR- HAVE CHANGED FROM THOSE USED WITH THE 1973-STYLE INPUT STRUCTURE. THE DEFINITION OF -AMSKK- ON RM-CARD WAS CHANGED WITH REVISIONS DATED 28 SEP 81. THE VERSION RELEASED 31JAN85 CONTAINS NEW OPTIONS ON RL AND BA RECORDS, AND ADDS THE HL RECORD. SEE JANUARY 1985 INPUT DESCRIPTION FOR NEW DEFINITIONS.

```
LINE          ID.......1.......2.......3.......4.......5.......6.......7.......8.......9......10

  1           ID        OUTER LOOP - ALTERNATIVES ANALYSIS HYDRAULIC MODEL
  2           ID        DEEP CONDUIT OUTFALL (SIPHON TUNNEL) ALTERNATIVE
  3           ID        100-YR 24-HR SCS METHOD HYDROLOGY
  4           IT       5       1       0     300
  5           IO       5             200

  6           KK       Z
  7           KM        HYDROGRAPH FOR FLOW PASSING THRU OR OVER CONTROL STRUCTURE AT EXTENSION
  8           IN      15       1       0
  9           QI       0       0       0       0       0       0       0       0       0       0
 10           QI       0       0       0       0       0       0       0       0       0       0
 11           QI       0       0       0       0       0       0       0       0       0       0
 12           QI       0       0       0       0       0       0       0       0       0       0
 13           QI       0       0       0       0       0       0       0       0       0       0
 14           QI       0       0     160     160     160     160     160     160     160     160
 15           QI     160     160     160     160     160     160     160     160     160     160
 16           QI     160     160     160     160     160     160     160     160     160     160
 17           QI     160     160     160     160     160     160     160     160     160     160
 18           QI     160     160     160     160     160     160     160     160     160     160
 19           QI     160     160     160     160     160     160     160     160     160     160
 20           QI     160     160     160     160     160     160     160     160     160     160
 21           QI     160     160     160     160     160     160     160     160     160     160
 22           QI     160     160     160     160     160     160     160     160     160     160
 23           QI     160     160     160     160     160     160     160     160     160     160
 24           QI     160     160     160     160     160     160     160     160     160     160
 25           QI     160     160     160     160     160     160     160     160     160     160
 26           QI     160     160     160     160     160     160     160     160     160     160
 27           QI     160     160     160     160     160      85      85      85      85      85
 28           QI      85      85      85      85      85      85      85      85      85      85
 29           QI      85      85      85      85      85      85      85      85      85      85
 30           QI      85      85      85      85      85      85      85      85      85      85
 31           QI      85      85      85      85      85      85      85      85      85      85
 32           QI      85      85      85      85      85      85      85      85      85      85
 33           QI      85      85      85      85      85      85      85      85      85      85
 34           QI      85      85      85      85      85      85      85      85      85      85
 35           QI      85      85      85      85      85      85      85      85      85      85
 36           QI      85      85      85      85      85      85      85      85      85      85
 37           QI      85      85      85      85      85      85      85      85      85      85
 38           QI      85      85      85      85      85      85      85      85      85      85
 39           QI      85      85      85      85      85      85      85      85      85      85

 40           KK      RZ
 41           KM        ROUTE HYDROGRAPH Z TO ALMA SCHOOL
 42           RK    5200  .00108    .020            TRAP      24       2

 43           KK       A
 44           KM        HYDROGRAPH FROM NORTHEAST AT ALMA SCHOOL AND SUPERSTITION
 45           IN       5       1       0
 46           QI       0       0       0       0       0       0       0       0       0       0
 47           QI       0       0       0       0       0       0       0       0       0       0
 48           QI       0       0       0       0       0       0       0       0       0       0
 49           QI       0       0       0       0       0       0       0       0       0       0
 50           QI       0       0       0       0       0       0       0       0       0       0
 51           QI       0       0       0       0       0       0       0       0       0       0
 52           QI       0       0       0       0       0       0       0       0       0       0
```

```
LINE          ID.......1.......2.......3.......4.......5.......6.......7.......8.......9......10

  53          QI       0       0       0       0       0       0       0       0       0       0
  54          QI       0       0       0       0       0       0       0       0       0       0
  55          QI       0       0       0       0       0       0       0       0       0       0
  56          QI       0       0       0       0       0       0       0       0       0       1
  57          QI       1       1       1       1       1       2       2       2       2       2
  58          QI       3       3       3       4       4       4       5       5       6       6
  59          QI       7       7       8       8       9      10      11      11      12      13
  60          QI      15      16      18      21      26      33      44      61      85     106
  61          QI     116     127     141     159     182     208     232     250     261     264
  62          QI     261     254     245     233     221     208     197     193     225     211
  63          QI     204     201     198     194     188     180     173     165     158     151
  64          QI     145     140     134     129     125     120     116     112     109     104
  65          QI      99      92      87      82      78      74      71      68      65      62
  66          QI      60      58      56      54      52      50      49      47      46      45
  67          QI      44      43      42      41      40      39      38      38      37      37
  68          QI      36      35      35      34      34      33      33      32      32      31
  69          QI      31      30      30      29      29      28      28      28      27      27
  70          QI      27      26      26      26      25      25      25      24      24      24
  71          QI      24      23      23      23      23      22      22      22      22      22
  72          QI      21      21      21      21      21      20      20      20      20      20
  73          QI      20      19      19      19      19      19      19      19      18      18
  74          QI      18      18      18      18      18      17      17      17      17      17
  75          QI      17      17      16      16      16      16      15      15      14      13
  76          QI       0       0       0       0       0       0       0       0       0       0

  77          KK   COM10
  78          KM        COMBINE HYDROGRAPHS TO HYDROGRAPH 10 (SUPERSTITION FREEWAY CHANNEL FLOW)
  79          HC       2

  80          KK     R10
  81          KM        ROUTE HYDROGRAPH 10 WEST
  82          RK    2000   .0010    .020            TRAP      24       2

  83          KK       B
  84          KM        HYDROGRAPH FROM NORTHEAST AT LONGMORE AND SUPERSTITION
  85          IN       5       1       0
  86          QI       0       0       0       0       0       0       0       0       0       0
  87          QI       0       0       0       0       0       0       0       0       0       0
  88          QI       0       0       0       0       0       0       0       0       0       0
  89          QI       0       0       0       0       0       0       0       0       0       0
  90          QI       0       0       0       0       0       0       0       0       0       0
  91          QI       0       0       0       0       0       0       0       0       0       0
  92          QI       0       0       0       0       0       0       0       0       0       0
  93          QI       0       0       0       0       0       0       0       0       0       0
  94          QI       0       0       0       0       0       0       0       0       0       0
  95          QI       0       0       0       0       0       0       0       0       0       0
  96          QI       0       0       0       0       0       0       0       0       0       0
  97          QI       0       0       0       0       0       0       0       0       0       0
  98          QI       0       0       0       0       1       1       1       1       1       1
  99          QI       1       1       1       1       1       1       1       2       2       2
 100          QI       2       2       3       4       5       7      10      14      19      24
 101          QI      31      41      54      72      96     122     147     167     180     186
 102          QI     186     180     172     161     149     137     165     158     143     129
 103          QI     121     115     109     103      97      91      85      78      72      66
 104          QI      60      55      50      46      42      38      34      31      28      25
```

```
LINE          ID.......1.......2.......3.......4.......5.......6.......7.......8.......9......10

105           QI      23      21      19      17      15      14      13      12      11      10
106           QI       9       9       8       8       7       7       7       6       6       6
107           QI       6       6       6       5       5       5       5       5       5       5
108           QI       5       5       4       4       4       4       4       4       4       4
109           QI       4       4       4       4       4       4       4       3       3       3
110           QI       3       3       3       3       3       3       3       3       3       3
111           QI       3       3       3       3       3       3       3       3       3       3
112           QI       3       3       3       3       3       3       3       2       2       2
113           QI       2       2       2       2       2       2       2       2       2       2
114           QI       2       2       2       2       2       2       2       2       2       2
115           QI       2       2       2       2       2       2       1       1       1       1
116           QI       0       0       0       0       0       0       0       0       0       0

117           KK   COM20
118           KM       COMBINE HYDROGRAPHS TO HYDROGRAPH 20 (SUPERSTITION FREEWAY CHANNEL FLOW)
119           HC       2

120           KK    R20
121           KM       ROUTE HYDROGRAPH 20 WEST
122           RK    3200   .0008    .020            TRAP      24       2

123           KK       C
124           KM       HYDROGRAPH FROM NORTHEAST AT DOBSON AND SUPERSTITION
125           IN       5       1       0
126           QI       0       0       0       0       0       0       0       0       0       0
127           QI       0       0       0       0       0       0       0       0       0       0
128           QI       0       0       0       0       0       0       0       0       0       0
129           QI       0       0       0       0       0       0       0       0       0       0
130           QI       0       0       0       0       0       0       0       0       0       0
131           QI       0       0       0       0       0       0       0       0       0       0
132           QI       0       0       0       0       0       0       0       0       0       0
133           QI       0       0       0       0       0       0       0       0       0       0
134           QI       0       0       0       0       0       0       0       0       0       0
135           QI       0       0       0       0       0       0       0       0       0       0
136           QI       0       0       0       0       0       0       0       0       0       0
137           QI       0       0       0       0       0       0       0       0       1       1
138           QI       1       1       1       1       1       1       1       1       2       2
139           QI       2       2       2       2       3       3       3       3       4       4
140           QI       5       5       6       8      10      14      20      28      38      49
141           QI      64      81     104     131     165     208     260     313     360     395
142           QI     414     419     412     396     374     348     321     294     269     246
143           QI     248     260     245     231     216     203     190     177     164     152
144           QI     141     130     120     111     102      94      87      80      74      68
145           QI      63      58      54      49      46      42      39      36      34      31
146           QI      29      27      25      23      21      19      18      16      15      14
147           QI      13      12      12      11      11      10      10       9       9       9
148           QI       9       9       8       8       8       8       8       7       7       7
149           QI       7       7       7       7       7       6       6       6       6       6
150           QI       6       6       6       6       6       6       6       5       5       5
151           QI       5       5       5       5       5       5       5       5       5       5
152           QI       5       5       5       5       5       4       4       4       4       4
153           QI       4       4       4       4       4       4       4       4       4       4
154           QI       4       4       4       4       4       4       4       4       4       4
155           QI       4       4       3       3       3       3       3       3       3       2
156           QI       0       0       0       0       0       0       0       0       0       0
```

```
LINE          ID.......1.......2.......3.......4.......5.......6.......7.......8.......9......10

  157         KK   COM30
  158         KM        COMBINE HYDROGRAPHS TO HYDROGRAPH 30 (SUPERSTITION FREEWAY CHANNEL FLOW)
  159         HC       2

  160         KK     R30
  161         KM        ROUTE HYDROGRAPH 30 WEST
  162         RK    1600   .0005    .020            TRAP      24       2

  163         KK       D
  164         KM        SURFACE HYDROGRAPH FROM EAST AT SOUTHERN AND THE TEMPE CANAL
  165         IN       5       1       0
  166         QI       0       0       0       0       0       0       0       0       0       0
  167         QI       0       0       0       0       0       0       0       0       0       0
  168         QI       0       0       0       0       0       0       0       0       0       0
  169         QI       0       0       0       0       0       0       0       0       0       0
  170         QI       0       0       0       0       0       0       0       0       0       0
  171         QI       0       0       0       0       0       0       0       0       0       0
  172         QI       0       0       0       0       0       0       0       0       0       0
  173         QI       0       0       0       0       0       0       0       0       0       0
  174         QI       0       0       0       0       0       0       0       0       0       0
  175         QI       0       0       0       0       0       0       0       0       0       0
  176         QI       0       0       0       0       0       0       0       0       0       0
  177         QI       0       0       0       0       0       0       1       1       1       1
  178         QI       1       1       1       1       1       2       2       2       2       2
  179         QI       3       3       3       3       4       4       5       5       5       6
  180         QI       7       8      10      13      17      25      36      51      70      93
  181         QI     124     163     207     255     309     370     430     482     518     537
  182         QI     538     525     511     558     647     679     656     617     576     536
  183         QI     508     479     450     421     394     372     356     339     320     300
  184         QI     280     260     240     222     205     190     175     162     150     138
  185         QI     128     118     110     102      94      87      81      76      71      66
  186         QI      62      58      54      50      46      42      39      37      34      33
  187         QI      31      30      28      27      26      25      24      24      23      22
  188         QI      22      21      20      20      19      19      19      18      18      17
  189         QI      17      17      16      16      16      16      15      15      15      15
  190         QI      14      14      14      14      14      14      13      13      13      13
  191         QI      13      13      12      12      12      12      12      12      12      11
  192         QI      11      11      11      11      11      11      11      11      10      10
  193         QI      10      10      10      10      10      10      10      10      10      10
  194         QI       9       9       9       9       9       9       9       9       9       9
  195         QI       9       9       8       8       8       8       8       7       7       7
  196         QI       0       0       0       0       0       0       0       0       0       0

  197         KK       E
  198         KM        PIPE FLOW HYDROGRAPH FROM EAST AT SOUTHERN AND TEMPE CANAL
  199         IN       5       1       0
  200         QI       0       0       0       0       0       0       0       0       0       0
  201         QI       0       0       0       0       0       0       0       0       0       0
  202         QI       0       0       0       0       0       0       0       0       0       0
  203         QI       0       0       0       0       0       0       0       0       0       0
  204         QI       0       0       0       0       0       0       0       0       0       0
  205         QI       0       0       0       0       0       0       0       0       0       0
  206         QI       0       0       0       0       0       0       0       0       0       0
  207         QI       0       0       0       0       0       0       0       0       0       0
```

```
LINE        ID.......1.......2.......3.......4.......5.......6.......7.......8.......9......10

 208        QI      0       0       0       0       0       0       0       0       0       0
 209        QI      0       0       0       0       0       0       0       0       0       0
 210        QI      0       0       0       0       0       0       0       1       1       1
 211        QI      1       1       2       2       2       2       3       3       3       4
 212        QI      4       5       5       6       6       7       7       8       9      10
 213        QI     11      12      13      14      15      17      18      20      22      24
 214        QI     26      29      33      38      45      57      75      88     119     130
 215        QI    130     130     130     130     130     130     130     130     130     130
 216        QI    130     130     130     130     130     130     130     130     130     130
 217        QI    130     130     130     130     130     130     130     130     130     130
 218        QI    130     130     130     130     130     130     130     130     130     130
 219        QI    130     130     130     130     130     130     130     130     130     130
 220        QI    130     130     130     130     130     129     127     124     122     119
 221        QI    117     115     113     111     110     108     107     105     104     103
 222        QI    101     100      99      98      97      96      95      94      93      92
 223        QI     91      90      89      88      87      87      86      85      84      83
 224        QI     83      82      81      81      80      79      79      78      78      77
 225        QI     77      76      75      75      74      74      74      73      73      72
 226        QI     72      71      71      71      70      70      70      69      69      68
 227        QI     68      68      67      67      67      66      66      66      65      65
 228        QI     65      64      64      64      63      63      63      63      62      62
 229        QI     62      61      61      61      60      60      59      58      57      56
 230        QI      0       0       0       0       0       0       0       0       0       0

 231        KK   COM40
 232        KM       COMBINE HYDROGRAPHS TO HYDROGRAPH 40 (FLOW IN DITCH NEXT TO TEMPE CANAL)
 233        HC      2

 234        KK    R40
 235        KM       ROUTE HYDROGRAPH 40 SOUTH
 236        RK   2500   .0005    .020            TRAP     10       4

 237        KK      F
 238        KM       LOCAL RUNOFF HYDROGRAPH AT SUPERSTITION AND THE TEMPE CANAL
 239        IN      5       1       0
 240        QI      0       0       0       0       0       0       0       0       0       0
 241        QI      0       0       0       0       0       0       0       0       0       0
 242        QI      0       0       0       0       0       0       0       0       0       0
 243        QI      0       0       0       0       0       0       0       0       0       0
 244        QI      0       0       0       0       0       0       0       0       0       0
 245        QI      0       0       0       0       0       0       0       0       0       0
 246        QI      0       0       0       0       0       0       0       0       0       0
 247        QI      0       0       0       0       0       0       0       0       0       0
 248        QI      0       0       0       0       0       0       0       0       0       0
 249        QI      0       0       0       0       0       0       0       0       0       0
 250        QI      0       0       0       0       0       0       0       0       0       0
 251        QI      0       0       0       0       0       0       0       0       0       0
 252        QI      0       0       0       0       0       0       0       0       0       0
 253        QI      0       0       0       0       0       0       0       0       0       0
 254        QI      1       1       1       1       2       3       5       7      10      13
 255        QI     16      20      22      23      24      24      24      22      21      19
 256        QI     17      15      13      11      10      28      44      39      35      31
 257        QI     28      25      23      21      19      17      16      15      14      13
 258        QI     12      11      10      10       9       9       8       8       7       7
 259        QI      7       6       6       6       6       5       5       5       5       5
```

```
LINE        ID.......1.......2.......3.......4.......5.......6.......7.......8.......9......10

 260        QI       5       5       4       4       4       4       4       4       4       4
 261        QI       4       4       4       4       4       3       3       3       3       3
 262        QI       3       3       3       3       3       3       3       3       3       3
 263        QI       3       3       3       3       2       2       2       2       2       2
 264        QI       2       2       2       2       2       2       2       2       2       2
 265        QI       2       2       2       2       2       2       2       2       2       2
 266        QI       2       2       2       2       2       2       2       2       2       2
 267        QI       2       2       2       2       2       2       2       2       2       1
 268        QI       1       1       1       1       1       1       1       1       1       1
 269        QI       1       1       1       1       1       1       1       1       1       0
 270        QI       0       0       0       0       0       0       0       0       0       0

 271        KK   COM50
 272        KM        COMBINE HYDROGRAPHS TO HYDROGRAPH 50 (FLOW IN MESA DRAIN/SUPERSTITION
 273        KM        FREEWAY CHANNEL WHERE IT PASSES UNDER THE SUPERSTITION FREEWAY)
 274        HC       3

 275        KK     R50
 276        KM        ROUTE SUPERSTITION HYDROGRAPH TO INTERCHANGE
 277        RK    2500   .0005    .020            TRAP      10       4

 278        KK       I
 279        KM        CARRIAGE LANE DETENTION BASIN INFLOW
 280        IN      15       1       0
 281        QI       0       0       0       0       0       0       0       0       0       0
 282        QI       0       0       0       0       0       0       0       0       0       0
 283        QI       0       0       0       0       0       0       0       0       0       0
 284        QI       0       0       0       0       0       0       0       0       0       0
 285        QI       0       0       0       0       0       0       0       0       0      51
 286        QI     165     291     346     325     261     179     122     116      96      77
 287        QI      63      55      49      46      44      44      44      44      76     155
 288        QI     239     287     301     296     283     245     247     229     212     196
 289        QI     181     168     155     144     134     125     117     109     103      96
 290        QI      91      86      81      77      74      70      67      64      61      58
 291        QI      54      51      48      46      43      40      38      36      34      32
 292        QI      31      31      30      30      30      29      29      29      29      29
 293        QI      29      29      29      29      29      28      28      28      28      28
 294        QI      28      28      28      28      28      27      27      27      27      27
 295        QI      27      27      27      27      27      26      26      26      26      26
 296        QI      26      26      26      26      26      26      25      25      25      25
 297        QI      25      25      25      25      25      25      25      24      24      24
 298        QI      24      24      24      24      24      24      24      24      23      23
 299        QI      23      23      23      23      23      23      23      23      23      23
 300        QI      22      22      22      22      22      22      22      22      22      22
 301        QI      22      22      21      21      21      21      21      21      21      21
 302        QI      21      21      21      21      21      20      20      20      20      20
 303        QI      20      20      20      20      20      20      20      20      20      19
 304        QI      19      19      19      19      19      19      19      19      19      19
 305        QI      19      19      19      19      19      18      18      18      18      18
 306        QI      18      18      18      18      18      18      18      18      18      18
 307        QI      18      18      17      17      17      17      17      17      17      17
 308        QI      17      17      17      17      17      17      17      17      17      17
 309        QI      16      16      16      16      16      16      16      16      16      16
 310        QI      16      16      16      16      16      16      16      16      16      15
 311        QI       0       0       0       0       0       0       0       0       0       0
```

```
LINE          ID.......1.......2.......3.......4.......5.......6.......7.......8.......9......10

 312          KK     60
 313          KM        CARRIAGE LANE DETENTION BASIN
 314          RS      1
 315          SA   0.14    0.23    0.48    0.82    1.31    2.14    3.30    4.90    5.69    6.25
 316          SA   6.95   10.09   11.29   13.74   15.35   17.05
 317          SE   1170    1171    1172    1173    1174    1175    1176    1177    1180    1182
 318          SE   1184    1185    1186    1188    1190    1192
 319          SQ      0      30      30     400
 320          SE   1170    1175    1191    1192

 321          KK  CHAGIL
 322          KM        HYDROGRAPH FROM CHANDLER AND GILBERT
 323          IN     15       1       0
 324          BA    .01
 325          QI      0       0       0       0       0       0       0       0       0       0
 326          QI      0       0       0       0       0       0       0       0       0       0
 327          QI      0       0       0       0       0       0       0       0       0       0
 328          QI      0       0       0       0       0       0       0       0       0       0
 329          QI      0       0       0       0       0       0       0       0       0       0
 330          QI      0       0     200     200     200     200     200     200     200     200
 331          QI    200     200     200     200     200     200     200     200     200     200
 332          QI    200     200     200     200     200     200     200     200     200     200
 333          QI    200     200     200     200     200     200     200     200     200     200
 334          QI    200     200     200     200     200     200     200     200     200     200
 335          QI    200     200     200     200     200     200     200     200     200     200
 336          QI    200     200     200     200     200     200     200     200     200     200
 337          QI    200     200     200     200     200     200     200     200     200     200
 338          QI    200     200     200     200     200     200     200     200     200     200
 339          QI    200     200     200     200     200     200     200     200     200     200
 340          QI    200     200     200     200     200     200     200     200     200     200
 341          QI    200     200     200     200     200     200     200     200     200     200
 342          QI    200     200     200     200     200     200     200     200     200     200
 343          QI    200     200     200     200     200     200     200     200     200     200
 344          QI    200     200     200     200     200     200       0       0       0       0
 345          QI      0       0       0       0       0       0       0       0       0       0
 346          QI      0       0       0       0       0       0       0       0       0       0
 347          QI      0       0       0       0       0       0       0       0       0       0
 348          QI      0       0       0       0       0       0       0       0       0       0
 349          QI      0       0       0       0       0       0       0       0       0       0
 350          QI      0       0       0       0       0       0       0       0       0       0
 351          QI      0       0       0       0       0       0       0       0       0       0
 352          QI      0       0       0       0       0       0       0       0       0       0
 353          QI      0       0       0       0       0       0       0       0       0       0
 354          QI      0       0       0       0       0       0       0       0       0       0
 355          QI      0       0       0       0       0       0       0       0       0       0

 356          KK  CAROUT
 357          HC      2
```

```
LINE          ID.......1.......2.......3.......4.......5.......6.......7.......8.......9......10

 358          KK     R60
 359          KM        ROUTE CARRIAGE LANE OUTFLOW (HYDROGRAPH 1) TO SOUTH OF GUADALUPE
 360          RK    1950  .00040    .020            CIRC     9.0

 361          KK       J
 362          KM        PIPE FLOW HYDROGRAPH SOUTH OF GUADALUPE
 363          IN      15       1       0
 364          QI       0       0       0       0       0       0       0       0       0       0
 365          QI       0       0       0       0       0       0       0       0       0       0
 366          QI       0       0       0       0       0       0       0       0       0       0
 367          QI       0       0       0       0       0       0       0       0       0       0
 368          QI       0       0       1       2       3       4       6      11      28      40
 369          QI      40      40      40      40      40      40      40       7       0       0
 370          QI       0       0       0       0       0       0       0       0       0       0
 371          QI       0       0       0       0       0       0       0       0       0       0
 372          QI       0       0       0       0       0       0       0       0       0       0
 373          QI       0       0       0       0       0       0       0       0       0       0
 374          QI       0       0       0       0       0       0       0       0       0       0
 375          QI       0       0       0       0       0       0       0       0       0       0
 376          QI       0       0       0       0       0       0       0       0       0       0
 377          QI       0       0       0       0       0       0       0       0       0       0
 378          QI       0       0       0       0       0       0       0       0       0       0
 379          QI       0       0       0       0       0       0       0       0       0       0
 380          QI       0       0       0       0       0       0       0       0       0       0
 381          QI       0       0       0       0       0       0       0       0       0       0
 382          QI       0       0       0       0       0       0       0       0       0       0
 383          QI       0       0       0       0       0       0       0       0       0       0
 384          QI       0       0       0       0       0       0       0       0       0       0
 385          QI       0       0       0       0       0       0       0       0       0       0
 386          QI       0       0       0       0       0       0       0       0       0       0
 387          QI       0       0       0       0       0       0       0       0       0       0
 388          QI       0       0       0       0       0       0       0       0       0       0
 389          QI       0       0       0       0       0       0       0       0       0       0
 390          QI       0       0       0       0       0       0       0       0       0       0
 391          QI       0       0       0       0       0       0       0       0       0       0
 392          QI       0       0       0       0       0       0       0       0       0       0
 393          QI       0       0       0       0       0       0       0       0       0       0

 394          KK      GL
 395          KM        GUADALUPE PUMP STATION HYDROGRAPH (ASSUMED SAME AS BL PS HYDROGRAPH)
 396          IN       5       1       0
 397          QI       0       0       0       0       0       0       0       0       0       0
 398          QI       0       0       0       0       0       0       0       0       0       0
 399          QI       0       0       0       0       0       0       0       0       0       0
 400          QI       0       0       0       0       0       0       0       0       0       0
 401          QI       0       0       0       0       0       0       0       0       0       0
 402          QI       0       0       0       0       0       0       0       0       0       0
 403          QI       0       0       0       0       0       0       0       0       0       0
 404          QI       0       0       0       0       0       0       0       0       0       0
 405          QI       0       0       0       0       0       0       0       0       0       0
 406          QI       0       0       0       0       0       0       0       0       0       0
 407          QI       0       0       0       0       0       0       0       0       0       0
 408          QI       0       0       0       0       0       0       0       0       0       0
 409          QI       0       1       1       1       1       1       1       1       1       1
```

```
LINE          ID.......1.......2.......3.......4.......5.......6.......7.......8.......9......10

 410          QI       1       2       2       2       2       2       3       3       4       5
 411          QI      10      15      21      31      51      95     140     134     101      73
 412          QI      53      39      27      18      13      10       8       7       6       6
 413          QI       5       5       4       4       4       4       4       4       4       3
 414          QI       3       3       3       3       3       3       3       2       2       2
 415          QI       2       2       2       2       2       2       2       2       2       2
 416          QI       2       2       2       2       1       1       1       1       1       1
 417          QI       1       1       1       1       1       1       1       1       1       1
 418          QI       1       1       1       1       1       1       1       1       1       1
 419          QI       1       1       1       1       1       1       1       1       1       1
 420          QI       1       1       1       1       1       1       1       1       1       1
 421          QI       1       1       1       1       1       1       1       1       0       0
 422          QI       0       0       0       0       0       0       0       0       0       0
 423          QI       0       0       0       0       0       0       0       0       0       0
 424          QI       0       0       0       0       0       0       0       0       0       0
 425          QI       0       0       0       0       0       0       0       0       0       0
 426          QI       0       0       0       0       0       0       0       0       0       0

 427          KK      C3
 428          KM        COMBINE HYDROGRAPHS FOR FLOW INTO CARLN PIPE
 429          HC       2

 430          KK    COM70
 431          KM        COMBINE HYDROGRAPHS TO HYDROGRAPH 70 (PIPE FLOW HYDROGRAPH JUST SOUTH
 432          KM        OF GUADALUPE)
 433          HC       2

 434          KK     R70
 435          KM        ROUTE TO NORTH OF GUADALUPE
 436          RK     400  .00050    .020            CIRC     9.0

 437          KK       K
 438          KM        OUTFLOW HYDROGRAPH FROM DOBSON RANCH LAKE
 439          IN      15       1       0
 440          QI       0       0       0       0       0       0       0       0       0       0
 441          QI       0       0       0       0       0       0       0       0       0       0
 442          QI       0       0       0       0       0       0       0       0       0       0
 443          QI       0       0       0       0       0       0       0       0       0       0
 444          QI       0       0       0       0       0       0       0       0       0       0
 445          QI       0       1       3       5       7      11      14      18      22      26
 446          QI      29      32      34      36      38      40      42      43      44      46
 447          QI      47      48      48      49      49      50      50      51      51      51
 448          QI      52      52      52      52      52      52      53      53      53      53
 449          QI      53      53      53      53      53      53      53      53      53      53
 450          QI      53      53      53      52      52      52      52      52      52      52
 451          QI      52      51      51      51      51      51      50      50      50      50
 452          QI      50      49      49      49      49      49      49      48      48      48
 453          QI      48      48      47      47      47      47      47      46      46      46
 454          QI      46      46      45      45      45      45      45      45      44      44
 455          QI      44      44      44      43      43      43      43      43      43      42
 456          QI      42      42      42      42      42      41      41      41      41      41
 457          QI      41      40      40      40      40      40      40      39      39      39
 458          QI      39      39      39      39      39      38      38      38      38      38
 459          QI      38      38      38      38      37      37      37      37      37      37
 460          QI      37      37      36      36      36      36      36      36      36      36
```

```
LINE          ID.......1.......2.......3.......4.......5.......6.......7.......8.......9......10

  461         QI      36      35      35      35      35      35      35      35      35      35
  462         QI      34      34      34      34      34      34      34      34      34      34
  463         QI      33      33      33      33      33      33      33      33      33      32
  464         QI      32      32      32      32      32      32      32      32      32      31
  465         QI      31      31      31      31      31      31      31      31      31      31
  466         QI      30      30      30      30      30      30      30      30      30      30
  467         QI      29      29      29      29      29      29      29      29      29      29
  468         QI      29      28      28      28      28      28      28      28      28      28
  469         QI      28      28      28      27      27      27      27      27      27      27
  470         QI       0       0       0       0       0       0       0       0       0       0

  471         KK   COM75
  472         KM        COMBINE HYDROGRAPHS TO HYDROGRAPH 75 (PIPE FLOW HYDROGRAPH JUST NORTH OF
  473         KM        GUADALUPE)
  474         HC       2

  475         KK     R75
  476         KM        ROUTE TOWARDS SUPERSTITION INTERCHANGE
  477         RK    5200  .00040    .020            CIRC     9.0

  478         KK       L
  479         KM        HYDROGRAPH FROM STRIP ADJACENT TO OUTER LOOP FROM GUADALUPE TO SUPERST.
  480         IN      15       1       0
  481         QI       0       0       0       0       0       0       0       0       0       0
  482         QI       0       0       0       0       0       0       0       0       0       0
  483         QI       0       0       0       0       0       0       0       0       0       0
  484         QI       0       0       0       0       0       0       0       0       0       0
  485         QI       0       0       0       0       1       1       2       4      15      53
  486         QI     107     110      77      46      29      19      14      10       8       7
  487         QI       6       5       4       4       4       3       3       3       3       3
  488         QI       2       2       2       2       2       2       2       2       2       2
  489         QI       2       1       1       1       1       1       1       1       1       1
  490         QI       1       1       1       1       1       1       1       1       0       0
  491         QI       0       0       0       0       0       0       0       0       0       0
  492         QI       0       0       0       0       0       0       0       0       0       0
  493         QI       0       0       0       0       0       0       0       0       0       0
  494         QI       0       0       0       0       0       0       0       0       0       0
  495         QI       0       0       0       0       0       0       0       0       0       0
  496         QI       0       0       0       0       0       0       0       0       0       0
  497         QI       0       0       0       0       0       0       0       0       0       0
  498         QI       0       0       0       0       0       0       0       0       0       0
  499         QI       0       0       0       0       0       0       0       0       0       0
  500         QI       0       0       0       0       0       0       0       0       0       0
  501         QI       0       0       0       0       0       0       0       0       0       0
  502         QI       0       0       0       0       0       0       0       0       0       0
  503         QI       0       0       0       0       0       0       0       0       0       0
  504         QI       0       0       0       0       0       0       0       0       0       0
  505         QI       0       0       0       0       0       0       0       0       0       0
  506         QI       0       0       0       0       0       0       0       0       0       0
  507         QI       0       0       0       0       0       0       0       0       0       0
  508         QI       0       0       0       0       0       0       0       0       0       0
  509         QI       0       0       0       0       0       0       0       0       0       0
  510         QI       0       0       0       0       0       0       0       0       0       0
```

```
LINE          ID.......1.......2.......3.......4.......5.......6.......7.......8.......9......10

 511          KK      BL
 512          KM        BASELINE PUMP STATION HYDROGRAPH
 513          IN       5       1       0
 514          QI       0       0       0       0       0       0       0       0       0       0
 515          QI       0       0       0       0       0       0       0       0       0       0
 516          QI       0       0       0       0       0       0       0       0       0       0
 517          QI       0       0       0       0       0       0       0       0       0       0
 518          QI       0       0       0       0       0       0       0       0       0       0
 519          QI       0       0       0       0       0       0       0       0       0       0
 520          QI       0       0       0       0       0       0       0       0       0       0
 521          QI       0       0       0       0       0       0       0       0       0       0
 522          QI       0       0       0       0       0       0       0       0       0       0
 523          QI       0       0       0       0       0       0       0       0       0       0
 524          QI       0       0       0       0       0       0       0       0       0       0
 525          QI       0       0       0       0       0       0       0       0       0       0
 526          QI       0       1       1       1       1       1       1       1       1       1
 527          QI       1       2       2       2       2       2       3       3       4       5
 528          QI      10      15      21      31      51      95     140     134     101      73
 529          QI      53      39      27      18      13      10       8       7       6       6
 530          QI       5       5       4       4       4       4       4       4       4       3
 531          QI       3       3       3       3       3       3       3       2       2       2
 532          QI       2       2       2       2       2       2       2       2       2       2
 533          QI       2       2       2       2       1       1       1       1       1       1
 534          QI       1       1       1       1       1       1       1       1       1       1
 535          QI       1       1       1       1       1       1       1       1       1       1
 536          QI       1       1       1       1       1       1       1       1       1       1
 537          QI       1       1       1       1       1       1       1       1       1       1
 538          QI       1       1       1       1       1       1       1       1       0       0
 539          QI       0       0       0       0       0       0       0       0       0       0
 540          QI       0       0       0       0       0       0       0       0       0       0
 541          QI       0       0       0       0       0       0       0       0       0       0
 542          QI       0       0       0       0       0       0       0       0       0       0
 543          QI       0       0       0       0       0       0       0       0       0       0

 544          KK      C4
 545          KM        COMBINE HYDROGRAPHS
 546          HC       2

 547          KK      C5
 548          KM        COMBINE HYDROGRAPHS
 549          HC       2

 550          KK     R80
 551          KM        ROUTE TO SUPERSTITION INTERCHANGE
 552          RK    2800  .00060    .020            CIRC     9.0

 553          KK      PR
 554          KM        PRICE ROAD PUMP STATION HYDROGRAPH
 555          IN       5       1       0
 556          QI       0       0       0       0       0       0       0       0       0       0
 557          QI       0       0       0       0       0       0       0       0       0       0
 558          QI       0       0       0       0       0       0       0       0       0       0
 559          QI       0       0       0       0       0       0       0       0       0       0
 560          QI       0       0       0       0       0       0       0       0       0       0
```

LINE	ID.....1	2	3	4	5	6	7	8	9	10
561	QI	0	0	0	0	0	0	0	0	0	0
562	QI	0	0	0	0	0	0	0	0	0	0
563	QI	0	0	0	0	0	0	0	0	0	0
564	QI	0	0	0	0	0	0	0	0	0	0
565	QI	0	0	0	0	0	0	0	0	0	0
566	QI	0	0	0	0	0	0	0	0	0	0
567	QI	0	0	0	0	0	0	0	0	0	0
568	QI	0	0	0	0	0	0	0	0	0	0
569	QI	0	1	1	1	1	1	1	2	2	3
570	QI	5	8	12	19	32	62	97	102	84	62
571	QI	46	35	25	17	12	9	7	6	5	5
572	QI	4	4	4	3	3	3	3	3	3	3
573	QI	3	2	2	2	2	2	2	2	2	2
574	QI	2	2	2	2	1	1	1	1	1	1
575	QI	1	1	1	1	1	1	1	1	1	1
576	QI	1	1	1	1	1	1	1	1	1	1
577	QI	1	1	1	1	1	1	1	1	1	1
578	QI	1	1	1	1	1	1	1	0	0	0
579	QI	0	0	0	0	0	0	0	0	0	0
580	QI	0	0	0	0	0	0	0	0	0	0
581	QI	0	0	0	0	0	0	0	0	0	0
582	QI	0	0	0	0	0	0	0	0	0	0
583	QI	0	0	0	0	0	0	0	0	0	0
584	QI	0	0	0	0	0	0	0	0	0	0
585	QI	0	0	0	0	0	0	0	0	0	0
586	KK	SR									
587	KM	RAMP DRAINAGE FROM THE EAST									
588	IN	5	1	0							
589	QI	0	0	0	0	0	0	0	0	0	0
590	QI	0	0	0	0	0	0	0	0	0	0
591	QI	0	0	0	0	0	0	0	0	0	0
592	QI	0	0	0	0	0	0	0	0	0	0
593	QI	0	0	0	0	0	0	0	0	0	0
594	QI	0	0	0	0	0	0	0	0	0	0
595	QI	0	0	0	0	0	0	0	0	0	0
596	QI	0	0	0	0	0	0	0	0	0	0
597	QI	0	0	0	0	0	0	0	0	0	0
598	QI	0	0	0	0	0	0	0	0	0	0
599	QI	0	0	0	0	0	0	0	0	0	0
600	QI	0	0	0	0	0	0	0	0	0	0
601	QI	0	0	0	0	0	0	0	0	0	0
602	QI	0	0	0	0	0	0	0	0	0	1
603	QI	2	3	4	5	9	17	25	23	17	12
604	QI	9	6	4	3	2	1	1	1	1	1
605	QI	0	0	0	0	0	0	0	0	0	0
606	QI	0	0	0	0	0	0	0	0	0	0
607	QI	0	0	0	0	0	0	0	0	0	0
608	QI	0	0	0	0	0	0	0	0	0	0
609	QI	0	0	0	0	0	0	0	0	0	0
610	QI	0	0	0	0	0	0	0	0	0	0
611	QI	0	0	0	0	0	0	0	0	0	0
612	QI	0	0	0	0	0	0	0	0	0	0
613	QI	0	0	0	0	0	0	0	0	0	0
614	QI	0	0	0	0	0	0	0	0	0	0

```
LINE          ID.......1.......2.......3.......4.......5.......6.......7.......8.......9.......10

 615          QI       0       0       0       0       0       0       0       0       0       0
 616          QI       0       0       0       0       0       0       0       0       0       0
 617          QI       0       0       0       0       0       0       0       0       0       0
 618          QI       0       0       0       0       0       0       0       0       0       0

 619          KK      C6
 620          KM        HYDROGRAPHS REPRESENTING FLOW INTO CARLN PIPE NEAR OR AT DROPSHAFT
 621          HC       2

 622          KK  COMTO1
 623          KM        COMBINE HYDROGRAPHS TO DROPSHAFT NO. 6 INFLOW
 624          HC       2

 625          KK  COMTO1
 626          KM        COMBINE HYDROGRAPHS TO HYDROGRAPH 1 (INFLOW HYDROGRAPH TO TUNNEL)
 627          HC       2

 628          KK  ROUTF1
 629          KM        ROUTE TUNNEL FLOW TO MANHATTON
 630          RK    1900  .00047    .020           CIRC      18

 631          KK    MHPS
 632          KM        MANHATTON PUMP STATION HYDROGRAPH
 633          IN       5       1       0
 634          QI       0       0       0       0       0       0       0       0       0       0
 635          QI       0       0       0       0       0       0       0       0       0       0
 636          QI       0       0       0       0       0       0       0       0       0       0
 637          QI       0       0       0       0       0       0       0       0       0       0
 638          QI       0       0       0       0       0       0       0       0       0       0
 639          QI       0       0       0       0       0       0       0       0       0       0
 640          QI       0       0       0       0       0       0       0       0       0       0
 641          QI       0       0       0       0       0       0       0       0       0       0
 642          QI       0       0       0       0       0       0       0       0       0       0
 643          QI       0       0       0       0       0       0       0       0       0       0
 644          QI       0       0       0       0       0       0       0       0       0       0
 645          QI       0       0       0       0       0       0       0       0       0       0
 646          QI       0       0       0       0       0       0       0       0       0       0
 647          QI       0       0       0       0       0       1       1       1       1       2
 648          QI       3       6       9      14      24      49      78      84      69      51
 649          QI      39      29      21      14      10       7       6       5       4       4
 650          QI       3       3       3       3       3       3       3       2       2       2
 651          QI       2       2       2       2       2       2       2       2       2       1
 652          QI       1       1       1       1       1       1       1       1       1       1
 653          QI       1       1       1       1       1       1       1       1       1       1
 654          QI       1       1       1       1       1       1       1       1       1       1
 655          QI       1       1       1       1       1       1       0       0       0       0
 656          QI       0       0       0       0       0       0       0       0       0       0
 657          QI       0       0       0       0       0       0       0       0       0       0
 658          QI       0       0       0       0       0       0       0       0       0       0
 659          QI       0       0       0       0       0       0       0       0       0       0
 660          QI       0       0       0       0       0       0       0       0       0       0
 661          QI       0       0       0       0       0       0       0       0       0       0
 662          QI       0       0       0       0       0       0       0       0       0       0
 663          QI       0       0       0       0       0       0       0       0       0       0
```

```
LINE          ID.......1.......2.......3.......4.......5.......6.......7.......8.......9......10

 664          KK      M
 665          KM       BOYLE STATION 4 HYDROGRAPH AT MANHATTON
 666          IN      5       1       0
 667          QI      0       0       0       0       0       0       0       0       0       0
 668          QI      0       0       0       0       0       0       0       0       0       0
 669          QI      0       0       0       0       0       0       0       0       0       0
 670          QI      0       0       0       0       0       0       0       0       0       0
 671          QI      0       0       0       0       0       0       0       0       0       0
 672          QI      0       0       0       0       0       0       0       0       0       0
 673          QI      0       0       0       0       0       0       0       0       0       0
 674          QI      0       0       0       0       0       0       0       0       0       0
 675          QI      0       0       0       0       0       0       0       0       0       0
 676          QI      0       0       0       0       0       0       0       0       0       0
 677          QI      0       0       0       0       0       0       0       0       0       0
 678          QI      0       0       0       0       0       0       0       0       0       0
 679          QI      0       0       0       0       0       0       0       0       0       0
 680          QI      1       1       1       1       1       2       2       2       2       3
 681          QI      3       4       6       9      13      22      35      52      74      98
 682          QI    122     141     153     159     157     150     138     124     110      96
 683          QI     84      73      63      55      48      43      38      33      30      27
 684          QI     24      22      20      18      17      15      14      13      12      12
 685          QI     11      10      10       9       9       8       8       8       7       7
 686          QI      7       7       6       6       6       6       6       6       5       5
 687          QI      5       5       5       5       5       5       5       5       4       4
 688          QI      4       4       4       4       4       4       4       4       4       4
 689          QI      4       4       4       3       3       3       3       3       3       3
 690          QI      3       3       3       3       3       3       3       3       3       3
 691          QI      3       3       3       3       3       3       2       2       2       2
 692          QI      2       2       2       2       2       2       2       2       2       2
 693          QI      2       2       2       2       2       2       2       2       2       2
 694          QI      2       2       2       2       2       2       2       2       2       2
 695          QI      2       2       2       2       2       2       2       2       2       2
 696          QI      2       2       1       1       1       1       1       1       1       0
 697          QI      0       0       0       0       0       0       0       0       0       0

 698          KK     S5
 699          KM       COMBINE TO DROPSHAFT FLOWS
 700          HC      2

 701          KK  COMTO2
 702          KM       COMBINE HYDROGRAPHS TO HYDROGRAPH 2 (TUNNEL HYDROGRAPH DOWNSTREAM OF
 703          KM       DROP SHAFT 5)
 704          HC      2

 705          KK  ROUTE2
 706          KM       ROUTE TUNNEL FLOW TO GENEVA
 707          RK    2300  .00047    .020           CIRC      18

 708          KK      N
 709          KM       BOYLE STATION 13 HYDROGRAPH AT GENEVA
 710          IN      5       1       0
 711          QI      0       0       0       0       0       0       0       0       0       0
 712          QI      0       0       0       0       0       0       0       0       0       0
 713          QI      0       0       0       0       0       0       0       0       0       0
```

```
LINE          ID.......1.......2.......3.......4.......5.......6.......7.......8.......9......10

  714         QI       0       0       0       0       0       0       0       0       0       0
  715         QI       0       0       0       0       0       0       0       0       0       0
  716         QI       0       0       0       0       0       0       0       0       0       0
  717         QI       0       0       0       0       0       0       0       0       0       0
  718         QI       0       0       0       0       0       0       0       0       0       0
  719         QI       0       0       0       0       0       0       0       0       0       0
  720         QI       0       0       0       0       0       0       0       0       0       0
  721         QI       0       0       0       0       0       0       0       0       0       0
  722         QI       0       0       0       0       0       0       0       0       0       0
  723         QI       0       0       0       0       0       0       0       1       1       1
  724         QI       1       1       1       2       2       2       3       3       3       4
  725         QI       5       6       8      12      18      29      46      70     103     140
  726         QI     177     200     210     211     203     189     172     153     131     113
  727         QI      97      84      73      64      56      49      43      39      35      31
  728         QI      28      25      23      21      20      18      17      16      15      14
  729         QI      13      13      12      11      11      10      10       9       9       9
  730         QI       9       8       8       8       8       7       7       7       7       7
  731         QI       7       7       6       6       6       6       6       6       6       6
  732         QI       6       5       5       5       5       5       5       5       5       5
  733         QI       5       5       5       4       4       4       4       4       4       4
  734         QI       4       4       4       4       4       4       4       4       4       4
  735         QI       3       3       3       3       3       3       3       3       3       3
  736         QI       3       3       3       3       3       3       3       3       3       3
  737         QI       3       3       3       3       3       3       3       3       3       3
  738         QI       3       3       3       2       2       2       2       2       2       2
  739         QI       2       2       2       2       2       2       2       2       2       2
  740         QI       2       2       2       2       2       1       1       1       1       1
  741         QI       0       0       0       0       0       0       0       0       0       0

  742         KK     PSC
  743         KM       OUTFLOW HYDROGRAPH FROM SOUTHERN AVE PUMP STATION - OCT 86 BOYLE REPORT
  744         IN       5       1       0
  745         QI       0       0       0       0       0       0       0       0       0       0
  746         QI       0       0       0       0       0       0       0       0       0       0
  747         QI       0       0       0       0       0       0       0       0       0       0
  748         QI       0       0       0       0       0       0       0       0       0       0
  749         QI       0       0       0       0       0       0       0       0       0       0
  750         QI       0       0       0       0       0       0       0       0       0       0
  751         QI       0       0       0       0       0       0       0       0       0       0
  752         QI       0       0       0       0       0       0       0       0       0       0
  753         QI       0       0       0       0       0       0       0       0       0       0
  754         QI       0       0       0       0       0       0       0       0       0       0
  755         QI       0       0       0       0       0       0       0       0       0       0
  756         QI       0       0       0       0       0       0       0       0       0       0
  757         QI       0       0       0       0       0       0       0       0       0       0
  758         QI       0       0       0       0       0       0       0       0       0       2
  759         QI       6      13      22      40      40      40      40      40      40      40
  760         QI      40      40      40      40      40      40      40      40      40      40
  761         QI       0       0       0       0       0       0       0       0       0       0
```

```
LINE          ID.......1.......2.......3.......4.......5.......6.......7.......8.......9......10

  762         KK    RPSC
  763         KM        ROUTE PUMP STATION FLOW TO DROP SHAFT 4
  764         RK     600   .0013    .020            CIRC     3.5

  765         KK     DS4
  766         KM        COMBINE HYDROGRAPHS AT GENEVA (DROP SHAFT 4 INFLOW)
  767         HC       2

  768         KK  COMTO3
  769         KM        COMBINE HYDROGRAPHS TO HYDROGRAPH 3 (TUNNEL HYDROGRAPH DOWNSTREAM OF
  770         KM        DROP SHAFT 4)
  771         HC       2

  772         KK  ROUTE3
  773         KM        ROUTE TUNNEL FLOW TO CONCORDA
  774         RK    3200  .00067    .020            CIRC      18

  775         KK       0
  776         KM        BOYLE STATION 16 HYDROGRAPH AT CONCORDA (DROP SHAFT 3 INFLOW)
  777         IN       5       1       0
  778         QI       0       0       0       0       0       0       0       0       0       0
  779         QI       0       0       0       0       0       0       0       0       0       0
  780         QI       0       0       0       0       0       0       0       0       0       0
  781         QI       0       0       0       0       0       0       0       0       0       0
  782         QI       0       0       0       0       0       0       0       0       0       0
  783         QI       0       0       0       0       0       0       0       0       0       0
  784         QI       0       0       0       0       0       0       0       0       0       0
  785         QI       0       0       0       0       0       0       0       0       0       0
  786         QI       0       0       0       0       0       0       0       0       0       0
  787         QI       0       0       0       0       0       0       0       0       0       0
  788         QI       0       0       0       0       0       0       0       0       0       0
  789         QI       0       0       0       0       0       0       0       0       0       0
  790         QI       0       0       0       0       0       0       0       0       0       0
  791         QI       0       0       0       1       1       1       1       1       2       2
  792         QI       2       3       5       7      11      18      30      46      67      88
  793         QI     104     115     121     120     115     105      93      80      68      58
  794         QI      50      42      34      31      27      24      21      18      17      15
  795         QI      13      12      11      10      10       9       8       8       7       7
  796         QI       6       6       6       6       5       5       5       5       5       5
  797         QI       4       4       4       4       4       4       4       4       4       4
  798         QI       3       3       3       3       3       3       3       3       3       3
  799         QI       3       3       3       3       3       3       3       3       2       2
  800         QI       2       2       2       2       2       2       2       2       2       2
  801         QI       2       2       2       2       2       2       2       2       2       2
  802         QI       2       2       2       2       2       2       2       2       2       2
  803         QI       2       2       1       1       1       1       1       1       1       1
  804         QI       1       1       1       1       1       1       1       1       1       1
  805         QI       1       1       1       1       1       1       1       1       1       1
  806         QI       1       1       1       1       1       1       1       1       1       1
  807         QI       1       1       1       1       1       1       0       0       0       0
  808         QI       0       0       0       0       0       0       0       0       0       0
```

```
LINE          ID.......1.......2.......3.......4.......5.......6.......7.......8.......9.......10

 809          KK  COMT04
 810          KM        COMBINE HYDROGRAPHS TO HYDROGRAPH 4 (TUNNEL HYDROGRAPH DOWNSTREAM OF
 811          KM        DROP SHAFT 3)
 812          HC       2

 813          KK  ROUTE4
 814          KM        ROUTE TUNNEL FLOW TO BROADWAY
 815          RK    1400  .00067    .020           CIRC      18

 816          KK       P
 817          KM        BOYLE STATION 23 HYDROGRAPH AT BROADWAY
 818          IN       5       1       0
 819          QI       0       0       0       0       0       0       0       0       0       0
 820          QI       0       0       0       0       0       0       0       0       0       0
 821          QI       0       0       0       0       0       0       0       0       0       0
 822          QI       0       0       0       0       0       0       0       0       0       0
 823          QI       0       0       0       0       0       0       0       0       0       0
 824          QI       0       0       0       0       0       0       0       0       0       0
 825          QI       0       0       0       0       0       0       0       0       0       0
 826          QI       0       0       0       0       0       0       0       0       0       0
 827          QI       0       0       0       0       0       0       0       0       0       0
 828          QI       0       0       0       0       0       0       0       0       0       0
 829          QI       0       0       0       0       0       0       0       0       0       0
 830          QI       0       0       0       0       0       0       0       0       0       0
 831          QI       0       0       0       0       0       0       0       0       0       0
 832          QI       0       0       0       0       0       0       0       0       0       0
 833          QI       0       1       2       3       5      10      20      32      42      48
 834          QI      51      51      54      54      53      51      48      44      40      35
 835          QI      30      26      22      19      17      15      13      12      11       9
 836          QI       9       8       7       7       6       6       5       5       5       4
 837          QI       4       4       4       3       3       3       3       3       3       3
 838          QI       3       2       2       2       2       2       2       2       2       2
 839          QI       2       2       2       2       2       2       2       2       2       2
 840          QI       2       2       1       1       1       1       1       1       1       1
 841          QI       1       1       1       1       1       1       1       1       1       1
 842          QI       1       1       1       1       1       1       1       1       1       1
 843          QI       1       1       1       1       1       1       1       1       1       1
 844          QI       1       1       1       1       1       1       1       1       1       1
 845          QI       1       1       1       1       1       1       1       1       1       1
 846          QI       1       1       1       1       1       1       1       0       0       0
 847          QI       0       0       0       0       0       0       0       0       0       0
 848          QI       0       0       0       0       0       0       0       0       0       0
 849          QI       0       0       0       0       0       0       0       0       0       0

 850          KK       G
 851          KM        HYDROGRAPH FOR FLOW IN DOUBLE PIPE IN BROADWAY
 852          IN       5       1       0
 853          QI       0       0       0       0       0       0       0       0       0       0
 854          QI       0       0       0       0       0       0       0       0       0       0
 855          QI       0       0       0       0       0       0       0       0       0       0
 856          QI       0       0       0       0       0       0       0       0       0       0
 857          QI       0       0       0       0       0       0       0       0       0       0
 858          QI       0       0       0       0       0       0       0       0       0       0
 859          QI       0       0       0       0       0       0       0       0       0       0
```

```
LINE          ID.......1.......2.......3.......4.......5.......6.......7.......8.......9......10

 860          QI      0       0       0       0       0       0       0       0       0       0
 861          QI      0       0       0       0       0       0       0       0       0       0
 862          QI      0       0       0       0       0       0       0       0       0       0
 863          QI      0       0       0       0       0       0       0       0       0       0
 864          QI      0       0       0       0       0       0       1       1       1       1
 865          QI      1       1       1       1       1       1       1       1       2       2
 866          QI      2       2       2       2       2       3       3       3       3       4
 867          QI      4       5       5       7       9      12      17      23      31      40
 868          QI     52      66      83     100     118     130     130     130     130     130
 869          QI    130     130     130     124     113     103      96      92      88     103
 870          QI    116     108     101      94      88      82      77      72      67      63
 871          QI     60      57      54      51      49      47      45      43      41      40
 872          QI     39      37      36      35      34      33      32      31      31      30
 873          QI     29      28      28      27      27      26      26      25      25      24
 874          QI     24      24      23      23      22      22      22      22      21      21
 875          QI     21      20      20      20      19      19      19      19      18      18
 876          QI     18      18      17      17      17      17      17      16      16      16
 877          QI     16      16      15      15      15      15      15      15      14      14
 878          QI     14      14      14      14      14      13      13      13      13      13
 879          QI     13      13      13      12      12      12      12      12      12      12
 880          QI     12      12      12      11      11      11      11      11      11      11
 881          QI     11      11      11      11      10      10      10      10      10      10
 882          QI     10      10      10      10       9       9       9       9       8       8
 883          QI      0       0       0       0       0       0       0       0       0       0

 884          KK     RG
 885          KM       ROUTE HYDROGRAPH G AS PIPE FLOW TO OUTER LOOP CORRIDOR
 886          RK    700   .0010    .020            CIRC       6

 887          KK      H
 888          KM       HYDROGRAPH FOR FLOW OVERTOPPING TEMPE CANAL BETWEEN SPRR AND APACHE
 889          IN      5       1       0
 890          QI      0       0       0       0       0       0       0       0       0       0
 891          QI      0       0       0       0       0       0       0       0       0       0
 892          QI      0       0       0       0       0       0       0       0       0       0
 893          QI      0       0       0       0       0       0       0       0       0       0
 894          QI      0       0       0       0       0       0       0       0       0       0
 895          QI      0       0       0       0       0       0       0       0       0       0
 896          QI      0       0       0       0       0       0       0       0       0       0
 897          QI      0       0       0       0       0       0       0       0       0       0
 898          QI      0       0       0       0       0       0       0       0       0       0
 899          QI      0       0       0       0       0       0       0       0       0       0
 900          QI      0       0       0       0       0       0       0       0       0       0
 901          QI      0       0       0       0       0       0       0       0       0       0
 902          QI      0       0       0       0       0       0       0       0       0       0
 903          QI      0       0       0       0       0       0       0       0       0       0
 904          QI      0       0       0       0       0       0       0       0       0       0
 905          QI      0       0       0       0       0       0       0       0       0       0
 906          QI      0       0       0       0       0       0       0       0       0       0
 907          QI      0       0       0       7      17      23      26      29      31      34
 908          QI     37      40      44      47      50      53      55      57      58      59
 909          QI     60      61      61      61      61      60      60      59      59      58
 910          QI     57      56      55      54      53      52      51      50      49      48
 911          QI     47      46      45      44      43      42      41      40      38      37
 912          QI     36      35      34      33      32      31      30      29      29      28
```

```
LINE          ID.......1.......2.......3.......4.......5.......6.......7.......8.......9.......10

 913          QI      27      26      25      24      23      22      22      21      20      19
 914          QI      18      18      17      16      16      15      14      14      13      12
 915          QI      12      11      11      10      10       9       9       8       8       7
 916          QI       7       7       6       6       6       5       5       5       5       5
 917          QI       4       4       4       4       4       4       4       4       3       3
 918          QI       3       3       3       3       3       3       3       3       3       3
 919          QI       3       3       3       2       2       2       2       2       2       2
 920          QI       0       0       0       0       0       0       0       0       0       0

 921          KK      RH
 922          KM        ROUTE HYDROGRAPH H OVERLAND TO OUTER LOOP CORRIDOR
 923          RK     600   .0010    .045            TRAP       1      25

 924          KK     RHP
 925          KM        ROUTE HYDROGRAPH H IN PIPE TO DROP SHAFT 2 AT BROADWAY
 926          RK    1300   .0015    .020            CIRC       4

 927          KK     PSB
 928          KM        OUTFLOW HYDROGRAPH FROM BROADWAY PUMP STATION - OCT 84 BOYLE REPORT
 929          IN       5       1       0
 930          QI       0       0       0       0       0       0       0       0       0       0
 931          QI       0       0       0       0       0       0       0       0       0       0
 932          QI       0       0       0       0       0       0       0       0       0       0
 933          QI       0       0       0       0       0       0       0       0       0       0
 934          QI       0       0       0       0       0       0       0       0       0       0
 935          QI       0       0       0       0       0       0       0       0       0       0
 936          QI       0       0       0       0       0       0       0       0       0       0
 937          QI       0       0       0       0       0       0       0       0       0       0
 938          QI       0       0       0       0       0       0       0       0       0       0
 939          QI       0       0       0       0       0       0       0       0       0       0
 940          QI       0       0       0       0       0       0       0       0       0       0
 941          QI       0       0       0       0       0       0       0       0       0       0
 942          QI       0       0       0       0       0       0       0       0       0       0
 943          QI       0       0       0       0       0       0       0       0       0       3
 944          QI       9      18      29      40      40      40      40      40      40      40
 945          QI      40      40      40      40      40      40      40      40      40      40
 946          QI      40      40      40      40      40      40      40      40      40      40
 947          QI       0       0       0       0       0       0       0       0       0       0

 948          KK     DS2
 949          KM        COMBINE HYDROGRAPHS AT BROADWAY (DROP SHAFT 2 INFLOW)
 950          HC       4

 951          KK  COMTO5
 952          KM        COMBINE HYDROGRAPHS TO HYDROGRAPH 5 (TUNNEL HYDROGRAPH DOWNSTREAM OF
 953          KM        DROP SHAFT 2)
 954          HC       2

 955          KK  ROUTE5
 956          KM        ROUTE TUNNEL FLOW TO MARYLAND
 957          RK    4600  .00067    .020            CIRC      18
```

```
LINE          ID.......1.......2.......3.......4.......5.......6.......7.......8.......9......10

  958         KK      Q
  959         KM       BOYLE STATION 31 HYDROGRAPH AT MARYLAND
  960         IN      5       1       0
  961         QI      0       0       0       0       0       0       0       0       0       0
  962         QI      0       0       0       0       0       0       0       0       0       0
  963         QI      0       0       0       0       0       0       0       0       0       0
  964         QI      0       0       0       0       0       0       0       0       0       0
  965         QI      0       0       0       0       0       0       0       0       0       0
  966         QI      0       0       0       0       0       0       0       0       0       0
  967         QI      0       0       0       0       0       0       0       0       0       0
  968         QI      0       0       0       0       0       0       0       0       0       0
  969         QI      0       0       0       0       0       0       0       0       0       0
  970         QI      0       0       0       0       0       0       0       0       0       0
  971         QI      0       0       0       0       0       0       0       0       0       0
  972         QI      0       0       0       0       0       0       0       0       0       0
  973         QI      0       0       0       0       0       0       0       0       0       0
  974         QI      0       0       0       0       0       0       1       1       1       2
  975         QI      2       3       4       6      10      18      31      49      73     101
  976         QI    130     135     173     182     184     180     170     155     138     121
  977         QI    105      92      80      70      61      54      48      43      38      34
  978         QI     31      28      25      23      21      20      18      17      16      15
  979         QI     14      13      13      12      11      11      10      10       9       9
  980         QI      9       8       8       8       8       8       7       7       7       7
  981         QI      7       7       7       6       6       6       6       6       6       6
  982         QI      6       6       5       5       5       5       5       5       5       5
  983         QI      5       5       5       5       4       4       4       4       4       4
  984         QI      4       4       4       4       4       4       4       4       4       4
  985         QI      4       3       3       3       3       3       3       3       3       3
  986         QI      3       3       3       3       3       3       3       3       3       3
  987         QI      3       3       3       3       3       3       3       3       3       3
  988         QI      3       3       3       3       3       2       2       2       2       2
  989         QI      2       2       2       2       2       2       2       2       2       2
  990         QI      2       2       2       2       2       2       1       1       1       1
  991         QI      0       0       0       0       0       0       0       0       0       0

  992         KK     PSA
  993         KM       OUTFLOW HYDROGRAPH FROM UNIVERSITY PUMP STATION - OCT 86 BOYLE REPORT
  994         IN      5       1       0
  995         QI      0       0       0       0       0       0       0       0       0       0
  996         QI      0       0       0       0       0       0       0       0       0       0
  997         QI      0       0       0       0       0       0       0       0       0       0
  998         QI      0       0       0       0       0       0       0       0       0       0
  999         QI      0       0       0       0       0       0       0       0       0       0
 1000         QI      0       0       0       0       0       0       0       0       0       0
 1001         QI      0       0       0       0       0       0       0       0       0       0
 1002         QI      0       0       0       0       0       0       0       0       0       0
 1003         QI      0       0       0       0       0       0       0       0       0       0
 1004         QI      0       0       0       0       0       0       0       0       0       0
 1005         QI      0       0       0       0       0       0       0       0       0       0
 1006         QI      0       0       0       0       0       0       0       0       0       0
 1007         QI      0       0       0       0       0       0       0       0       0       0
 1008         QI      0       0       0       0       0       0       0       0       0       3
 1009         QI     10      19      32      40      40      40      40      40      40      40
 1010         QI     40      40      40      40      40      40      40      40      40      40
```

```
LINE          ID.......1.......2.......3.......4.......5.......6.......7.......8.......9......10

1011          QI      40      40      40      40      40      40      40      40      40      40
1012          QI      40      40       0       0       0       0       0       0       0       0
1013          QI       0       0       0       0       0       0       0       0       0       0

1014          KK    RPSA
1015          KM        ROUTE PUMP STATION FLOW TO DROP SHAFT 1
1016          RK     500   .0013    .020           CIRC     3.5

1017          KK     DS1
1018          KM        COMBINE HYDROGRAPHS AT MARYLAND (DROP SHAFT 1 INFLOW)
1019          HC       2

1020          KK  COMTO6
1021          KM        COMBINE HYDROGRAPHS TO HYDROGRAPH 6 (TUNNEL HYDROGRAPH DOWNSTREAM OF
1022          KM        DROP SHAFT 1)
1023          HC       2

1024          KK  ROUTE6
1025          KM        ROUTE TUNNEL FLOW TO SYSTEM HIGH POINT NEAR 1ST STREET
1026          RK    3300  .00067    .020           CIRC      18

1027          KK  ROUT 0
1028          KM       ROUTE TUNNEL SYSTEM FLOWS TO 1ST COMBINATION POINT WITH SURFACE FLOWS
1029          KM       FROM NORTH OF UNIVERSITY
1030          RK     500  .00100    .020           TRAP      28       0

1031          KK  SUB22D
1032          KM       RUNOFF FROM SUB-BASIN 22D
1033          BA  0.0276
1034          PH                   0.72    1.41    2.48    2.72    2.89    3.20    3.54    3.90
1035          LS       0      98                  68.20
1036          UK      35    0.01     0.1      70
1037          UK      35    0.01    0.20      30
1038          RK     800   0.005    0.02  0.0055    TRAP       0      50
1039          RK      75   0.005    0.02           TRAP       0      50

1040          KK   CP22B
1041          KM       ROUTE RUNOFF FROM SUB-BASIN 22D TO SUB-BASIN 22B
1042          RS       1    FLOW      -1
1043          RC   0.035   0.020   0.035     420  0.0050
1044          RX       0       0      10      10      35      35      85      85
1045          RY     0.6     0.6     0.5       0       0     0.5    0.75    0.75

1046          KK  SUB22C
1047          KM       RUNOFF FROM SUB-BASIN 22C
1048          BA  0.0170
1049          LS       0      98                  68.20
1050          UK      35    0.01     0.1      70
1051          UK      35    0.01    0.20      30
1052          RK     767   0.005    0.02  0.0057    TRAP       0      50
1053          RK     300   0.005    0.02           TRAP       0      50
```

```
LINE          ID.......1.......2.......3.......4.......5.......6.......7.......8.......9......10

1054          KK   CP22B
1055          KM       COMBINE RUNOFF FROM SUB-BASINS 22C AND 22D AT SUB-BASIN 22B
1056          HC       2

1057          KK   CP  D
1058          KM       ROUTE COMBINED RUNOFF TO CONCENTRATION POINT D
1059          RS       1    FLOW      -1
1060          RC   0.035   0.027   0.035     470  0.0050
1061          RX       0       0     100     100     130     130     220     220
1062          RY     0.8     0.8     0.5       0       0     0.5     0.8     0.8

1063          KK  SUB22B
1064          KM       RUNOFF FROM SUB-BASIN 22B
1065          BA  0.0096
1066          LS       0      98                  68.20
1067          UK      35    0.01     0.1      70
1068          UK      35    0.01    0.20      30
1069          RK     625   0.005    0.02  0.0057    TRAP       0      50
1070          RK     330   0.005   0.026            TRAP       0     100

1071          KK  SUB22A
1072          KM       RUNOFF FROM SUB-BASIN 22A
1073          BA  0.0109
1074          LS       0      98                  73.00
1075          UK     300    0.01     0.1       9
1076          UK     200    0.01    0.15      91
1077          RK    1250   0.005    0.02            TRAP       0     200

1078          KK    CP D
1079          KM       COMBINE RUNOFF FROM SUB-BASINS 22C-D,22B,AND 22A AT CONCENTRATION POINT D
1080          HC       3

1081          KK   CP RD
1082          KM       ROUTE RUNOFF FROM CONCENTRATION POINT D TO CONCENTRATION POINT C
1083          RK    1600  .00100    .020            TRAP      10       2

1084          KK  SUB 21
1085          KM       RUNOFF FROM SUB-BASIN 21
1086          BA  0.0257
1087          LS       0      98                  60.40
1088          UK     100    0.01     0.1      85
1089          UK     100    0.01    0.25      15
1090          RK     477   0.005    0.02  0.0085    TRAP       0      50
1091          RK    1280   0.005    0.02            TRAP       0      50

1092          KK    CP24
1093          KM       ROUTE RUNOFF FROM SUB-BASIN 21 TO SUB-BASIN 24
1094          RS       1    FLOW      -1
1095          RC   0.035   0.035   0.035    1340  0.0024
1096          RX       0       0       0     825     825    1650    1650    1650
1097          RY       2       2       2       0       0       2       2       2
```

```
LINE          ID.......1.......2.......3.......4.......5.......6.......7.......8.......9......10

1098          KK  SUB 23
1099          KM      RUNOFF FROM SUB-BASIN 23
1100          BA  0.0828
1101          LS      0      98                   73.00
1102          UK    300  0.0024     0.1       1
1103          UK    300  0.0024    0.15      99
1104          RK   1350  0.0024   0.035  0.0166    TRAP      0      50
1105          RK   1650  0.0024    0.03            TRAP      2       1

1106          KK   CP24
1107          KM      COMBINE RUNOFF FROM SUB-BASINS 21 AND 23
1108          HC      2

1109          KK   CPC1
1110          KM      ROUTE RUNOFF FROM SUB-BASINS 21-23 TO CONCENTRATION POINT C
1111          RS      1   FLOW      -1
1112          RC  0.035  0.030   0.027     640  0.0024
1113          RX      0      0     200     203     204     207     257     287
1114          RY    3.9    3.9     2.5       0       0     2.5     2.5     6.5

1115          KK  SUB 24
1116          KM      RUNOFF FROM SUB-BASIN 24
1117          BA  0.0305
1118          LS      0      98                   73.00
1119          UK     75  0.0024     0.1      25
1120          UK    200  0.0024    0.15      75
1121          RK    800  0.0024    0.02  0.0153    TRAP      0      50
1122          RK    630  0.0024    0.03            TRAP      2       1

1123          KK  SUB 25
1124          KM      RUNOFF FROM SUB-BASIN 25
1125          BA  0.0588
1126          LS      0      98                   64.00
1127          UK     50   0.003     0.1       6
1128          UK    250   0.003    0.15      94
1129          RK    587   0.003   0.035  0.0176    TRAP      0     100
1130          RK   1210   0.003   0.035            TRAP      0     100

1131          KK    CPC
1132          KM      COMBINE RUNOFF FROM SUB-BASINS 21-23,24,25 AT CONCENTRATION POINT C
1133          HC      3

1134          KK   CP CD
1135          KM      COMBINE RUNOFF FROM CONCENTRATION POINTS C & D
1136          HC      2

1137          KK  CP RCD
1138          KM      ROUTE COMBINED C & D FLOWS TO POINT WHERE THEY CAN BE COMBINED WITH
1139          KM      TUNNEL SYSTEM FLOWS (SOMEWHAT DOWNSTREAM OF TUNNEL SYSTEM HIGHPOINT)
1140          RK    500  .00100    .020            TRAP     10       2
```

```
LINE        ID.......1.......2.......3.......4.......5.......6.......7.......8.......9.......10

1141        KK   OUT 1
1142        KM       COMBINE TUNNEL SYSTEM FLOWS WITH COMBINED AREA C&D FLOWS
1143        HC       2

1144        KK  ROUT 1
1145        KM       ROUTE COMBINED SYSTEM FLOWS TO NEXT COMBINATION POINT
1146        RK     800  .00100    .020            TRAP      28       0

1147        KK  SUB 26
1148        KM       RUNOFF FROM SUB-BASIN 26 TO CONCENTRATION POINT B
1149        BA  0.0107
1150        LS       0      64
1151        UK     200  0.0117    0.15     100
1152        RK    1200   0.002   0.035            TRAP       0     100

1153        KK   SUB 1
1154        KM       RUNOFF FROM SUB-BASIN 1
1155        BA  0.0108
1156        PH                    0.72    1.41    2.48    2.72    2.89    3.20    3.54    3.90
1157        LS       0      98                   60.40
1158        UK      50    0.01     0.1      74
1159        UK      30    0.01    0.25      26
1160        RK     515   0.007    0.02  0.0054    TRAP       0      50
1161        RK     250   0.007    0.02            TRAP       0      50
1162        KM       RUNOFF FROM SUB-BASIN 2C

1163        KK  SUB 2C
1164        BA  0.0188
1165        LS       0      98                   68.20
1166        UK      55    0.01     0.1      45
1167        UK      55    0.01    0.25      55
1168        RK     450   0.007    0.02  0.0047    TRAP       0      50
1169        RK     790   0.007    0.02            TRAP       0      50

1170        KK   CP 2C
1171        KM       COMBINE RUNOFF FROM SUB-BASINS 1 AND 2C
1172        HC       2

1173        KK    CP 4
1174        KM       ROUTE RUNOFF FROM SUB-BASINS 1-2C TO SUB-BASIN 4
1175        RS       1    FLOW      -1
1176        RC   0.030   0.020   0.035    1510   0.007
1177        RX       0      25      25      25      90      90     120     120
1178        RY    0.75     0.5     0.5       0       0     0.5    0.75    0.75

1179        KK  SUB 2B
1180        KM       RUNOFF FROM SUB-BASIN 2B
1181        BA  0.0224
1182        LS       0      98                   68.20
1183        UK      55    0.01     0.1      45
1184        UK      55    0.01    0.25      55
1185        RK     983   0.007    0.02  0.0112    TRAP       0      50
1186        RK     530   0.007    0.02            TRAP       0      50
```

```
LINE          ID.......1.......2.......3.......4.......5.......6.......7.......8.......9......10

1187          KK  SUB 2A
1188          KM       RUNOFF FROM SUB-BASIN 2A
1189          BA  0.0848
1190          LS       0      98                   68.20
1191          UK      55    0.01     0.1      51
1192          UK      55    0.01    0.25      49
1193          RK    1308   0.007    0.02  0.0089    TRAP       0      50
1194          RK     587   0.007    0.02  0.0283    TRAP       0      50
1195          RK    1510   0.007    0.02            TRAP       0      50

1196          KK    CP 4
1197          KM       COMBINE RUNOFF FROM SUB-BASINS 1-2C,2A,2B
1198          HC       3

1199          KK    CP 5
1200          KM       ROUTE (KINEMATIC) RUNOFF FROM SUB-BASINS 1-2 TO SUB-BASIN 5
1201          RK     330   0.007   0.020            TRAP       0      50

1202          KK   SUB 4
1203          KM       RUNOFF FROM SUB-BASIN 4
1204          BA  0.0460
1205          LS       0      98                   60.40
1206          UK     100    0.01     0.1      70
1207          UK     100    0.01    0.25      30
1208          RK     200   0.007    0.02  0.0028    TRAP       0      50
1209          RK     380   0.007    0.02  0.0153    TRAP       0      50
1210          RK     300   0.007    0.02            TRAP       0      50

1211          KK    CP 5
1212          KM       COMBINE RUNOFF FROM SUB-BASINS 1-2 AND 4
1213          HC       2

1214          KK    CP 6
1215          KM       ROUTE RUNOFF FROM SUB-BASINS 1-2,4 TO SUB-BASIN 6
1216          RS       1    FLOW      -1
1217          RC   0.060   0.030   0.060    1140   0.007
1218          RX       0     360   360.5     343     368   370.5     730     730
1219          RY     2.8     2.5     2.5       0       0     2.5     2.8     2.8

1220          KK   SUB 3
1221          KM       RUNOFF FROM SUB-BASIN 3
1222          BA  0.0438
1223          LS       0      98                   68.20
1224          UK      75    0.01     0.1      74
1225          UK      40    0.01    0.25      26
1226          RK     350   0.007    0.02  0.0031    TRAP       0      50
1227          RK     275   0.007    0.02            TRAP       0      50

1228          KK   CP 5A
1229          KM       ROUTE (KINEMATIC) RUNOFF FROM SUB-BASIN 3 TO SUB-BASIN 5
1230          RK     700   0.007    0.02            TRAP       0      50
```

```
LINE          ID.......1.......2.......3.......4.......5.......6.......7.......8.......9.......10

1231          KK    CP 6
1232          KM       ROUTE RUNOFF FROM SUB-BASIN 3 TO SUB-BASIN 6
1233          RS       1    FLOW      -1
1234          RC   0.040   0.025   0.060    1040   0.007
1235          RX       0     400     400     402     403     405     765     765
1236          RY     2.2       2       2       0       0       2     2.2     2.2

1237          KK   SUB 5
1238          KM       RUNOFF FROM SUB-BASIN 5
1239          BA  0.0314
1240          LS       0      98                   65.00
1241          UK      40  0.0045     0.1       3
1242          UK      40  0.0045    0.25      97
1243          RK     595   0.007    0.02  0.0024    TRAP       0      50
1244          RK    1140   0.007    0.03            TRAP       5       1

1245          KK    CP 6
1246          KM       COMBINE RUNOFF FROM SUB-BASINS 1-5 AT 6
1247          HC       3

1248          KK    CP 7
1249          KM       ROUTE RUNOFF FROM SUB-BASINS 1-5 TO SUB-BASIN 7
1250          RS       1    FLOW      -1
1251          RC   0.025   0.025   0.025    1850   0.003
1252          RX       0       0       0      30      35      65      45      65
1253          RY       6       6       6       0       0       6       6       6

1254          KK   SUB 6
1255          KM       RUNOFF FROM SUB-BASIN 6
1256          BA  0.0076
1257          LS       0    60.4
1258          UK      60    0.17    0.25     100
1259          RK    1850   0.003   0.025            TRAP       5       5

1260          KK    CP 7
1261          KM       COMBINE RUNOFF FROM SUB-BASINS 1-6 AT 7
1262          HC       2

1263          KK    CP A
1264          KM       ROUTE (KINEMATIC) RUNOFF FROM SUB-BASINS 1-6 TO CONCENTRATION POINT A
1265          RK     500   0.007   0.020            TRAP       6       1

1266          KK   SUB 7
1267          KM       RUNOFF FROM SUB-BASIN 7
1268          BA  0.0440
1269          LS       0      98                   85.00
1270          UK     300   0.005    0.10      50
1271          UK     300   0.005    0.15      50
1272          RK     500   0.007   0.020            TRAP       6       1
```

```
LINE          ID.......1.......2.......3.......4.......5.......6.......7.......8.......9......10

1273          KK    CP A
1274          KM       COMBINE RUNOFF FROM SUB-BASINS 1-7 AT CONCENTRATION POINT A
1275          HC       2

1276          KK   CP RA
1277          KM       ROUTE CONCENTRATION POINT A FLOW TO CONCENTRATION POINT B
1278          RK    1400  .00100    .020            TRAP      10       2

1279          KK   CP AB
1280          KM       COMBINE FLOWS FROM CONCENTRATION POINTS A AND B
1281          HC       2

1282          KK  CP RAB
1283          KM       ROUTE COMBINED A&B FLOWS TO SYSTEM OUTFALL
1284          RK     900  .00100    .020            TRAP      10       2

1285          KK   OUT 2
1286          KM       COMBINE A&B FLOWS WITH SYSTEM FLOWS
1287          HC       2
1288          ZZ
```

RUNOFF SUMMARY
FLOW IN CUBIC FEET PER SECOND
TIME IN HOURS, AREA IN SQUARE MILES

OPERATION	STATION	PEAK FLOW	TIME OF PEAK	AVERAGE FLOW FOR MAXIMUM PERIOD 6-HOUR	24-HOUR	72-HOUR	BASIN AREA	MAXIMUM STAGE	TIME OF MAX STAGE
HYDROGRAPH AT	Z	160.	13.00	160.	80.	77.	0.00		
ROUTED TO	RZ	160.	15.00	160.	77.	75.	0.00		
HYDROGRAPH AT	A	264.	13.25	127.	39.	38.	0.00		
2 COMBINED AT	COM10	384.	14.00	266.	117.	113.	0.00		
ROUTED TO	R10	382.	13.58	266.	116.	112.	0.00		
HYDROGRAPH AT	B	186.	13.25	61.	16.	15.	0.00		
2 COMBINED AT	COM20	552.	13.50	323.	132.	127.	0.00		
ROUTED TO	R20	548.	13.58	323.	130.	125.	0.00		
HYDROGRAPH AT	C	419.	13.42	133.	35.	34.	0.00		
2 COMBINED AT	COM30	956.	13.50	450.	165.	159.	0.00		
ROUTED TO	R30	953.	13.58	450.	164.	158.	0.00		
HYDROGRAPH AT	D	679.	13.75	237.	63.	61.	0.00		
HYDROGRAPH AT	E	130.	12.42	126.	55.	53.	0.00		
2 COMBINED AT	COM40	809.	13.75	363.	118.	113.	0.00		
ROUTED TO	R40	793.	13.83	362.	117.	113.	0.00		
HYDROGRAPH AT	F	44.	13.83	13.	4.	4.	0.00		
3 COMBINED AT	COM50	1705.	13.83	822.	285.	274.	0.00		
ROUTED TO	R50	1696.	13.83	821.	283.	272.	0.00		
HYDROGRAPH AT	I	346.	13.00	179.	76.	73.	0.00		
ROUTED TO	60	30.	12.67	30.	16.	15.	0.00	1109.60	24.92
HYDROGRAPH AT	CHAGUL	200.	13.00	200.	100.	97.	0.01		
2 COMBINED AT	CAROUT	230.	13.00	230.	116.	112.	0.01		
ROUTED TO	R60	230.	13.58	230.	115.	111.	0.01		
HYDROGRAPH AT	J	40.	12.25	16.	4.	4.	0.01		
HYDROGRAPH AT	GL	140.	12.17	14.	4.	3.	0.01		
2 COMBINED AT	C3	176.	12.17	30.	8.	7.	0.02		
2 COMBINED AT	COM70	275.	13.25	239.	123.	118.	0.03		
ROUTED TO	R70	275.	13.33	239.	122.	118.	0.03		

HYDROGRAPH AT	K	53.	21.50	52.	21.	21.	0.01
2 COMBINED AT	COM75	288.	14.00	283.	144.	138.	0.04
ROUTED TO	R75	287.	14.08	283.	140.	135.	0.04
HYDROGRAPH AT	L	110.	12.75	22.	6.	6.	0.01
HYDROGRAPH AT	BL	140.	12.17	14.	4.	3.	0.01
2 COMBINED AT	C4	187.	12.25	36.	10.	9.	0.02
2 COMBINED AT	C5	305.	13.67	284.	150.	145.	0.06
ROUTED TO	R80	304.	13.83	284.	148.	143.	0.06
HYDROGRAPH AT	PR	102.	12.25	10.	3.	3.	0.01
HYDROGRAPH AT	SR	25.	12.17	2.	1.	0.	0.01
2 COMBINED AT	C6	125.	12.25	12.	3.	3.	0.02
2 COMBINED AT	COMT01	342.	12.42	284.	151.	146.	0.08
2 COMBINED AT	COMT01	2004.	13.83	1097.	434.	418.	0.08
ROUTED TO	ROUTE1	2001.	13.92	1097.	433.	417.	0.08
HYDROGRAPH AT	MHPS	84.	12.25	8.	2.	2.	0.01
HYDROGRAPH AT	M	159.	12.75	35.	10.	9.	0.01
2 COMBINED AT	S5	174.	12.67	44.	12.	11.	0.02
2 COMBINED AT	COMT02	2036.	13.92	1127.	444.	428.	0.10
ROUTED TO	ROUTE2	2033.	14.00	1128.	443.	426.	0.10
HYDROGRAPH AT	N	211.	12.75	45.	12.	12.	0.01
HYDROGRAPH AT	PSC	40.	11.92	10.	3.	2.	0.01
ROUTED TO	RPSC	40.	12.00	10.	3.	2.	0.01
2 COMBINED AT	DS4	251.	12.75	55.	15.	14.	0.02
2 COMBINED AT	COMT03	2068.	14.00	1174.	457.	441.	0.12
ROUTED TO	ROUTE3	2060.	14.00	1173.	455.	438.	0.12
HYDROGRAPH AT	O	121.	12.67	24.	7.	6.	0.01
2 COMBINED AT	COMT04	2077.	14.00	1195.	461.	444.	0.13
ROUTED TO	ROUTE4	2075.	14.08	1194.	460.	443.	0.13
HYDROGRAPH AT	P	54.	12.67	13.	4.	3.	0.01
HYDROGRAPH AT	G	130.	12.92	62.	20.	19.	0.01
ROUTED TO	RG	130.	13.00	62.	20.	19.	0.01
HYDROGRAPH AT	H	61.	15.92	40.	11.	11.	0.01

ROUTED TO	RH	61.	16.08	40.	11.	11.	0.01		
ROUTED TO	RHP	61.	16.17	40.	11.	11.	0.01		
HYDROGRAPH AT	PSB	40.	11.92	16.	4.	4.	0.01		
4 COMBINED AT	DS2	218.	13.00	116.	38.	37.	0.04		
2 COMBINED AT	COMT05	2220.	14.08	1309.	498.	480.	0.17		
ROUTED TO	ROUTE5	2207.	14.17	1307.	493.	475.	0.17		
HYDROGRAPH AT	Q	184.	12.83	42.	11.	11.	0.01		
HYDROGRAPH AT	PSA	40.	11.92	17.	4.	4.	0.01		
ROUTED TO	RPSA	40.	12.00	17.	4.	4.	0.01		
2 COMBINED AT	DS1	224.	12.83	58.	16.	15.	0.02		
2 COMBINED AT	COMT06	2280.	14.08	1355.	509.	490.	0.19		
ROUTED TO	ROUTE6	2279.	14.17	1354.	506.	487.	0.19		
ROUTED TO	ROUT Q	2279.	14.17	1354.	505.	487.	0.19		
HYDROGRAPH AT	SUB22D	96.	12.17	7.	2.	2.	0.03		
ROUTED TO	CP22B	86.	12.25	7.	2.	2.	0.03	0.75	12.25
HYDROGRAPH AT	SUB22C	57.	12.17	4.	1.	1.	0.02		
2 COMBINED AT	CP22B	133.	12.25	12.	3.	3.	0.04		
ROUTED TO	CP D	120.	12.25	12.	3.	3.	0.04	0.85	12.25
HYDROGRAPH AT	SUB22B	32.	12.17	3.	1.	1.	0.01		
HYDROGRAPH AT	SUB22A	13.	12.33	2.	0.	0.	0.01		
3 COMBINED AT	CP D	159.	12.25	16.	5.	4.	0.07		
ROUTED TO	CP RD	146.	12.33	16.	5.	4.	0.07		
HYDROGRAPH AT	SUB 21	84.	12.25	7.	2.	2.	0.03		
ROUTED TO	CP24	37.	12.42	7.	2.	2.	0.03	0.36	12.42
HYDROGRAPH AT	SUB 23	47.	12.67	11.	3.	3.	0.08		
2 COMBINED AT	CP24	78.	12.58	18.	5.	5.	0.11		
ROUTED TO	CPC1	74.	12.75	18.	5.	5.	0.11	2.85	12.75
HYDROGRAPH AT	SUB 24	45.	12.25	5.	2.	2.	0.03		
HYDROGRAPH AT	SUB 25	21.	12.58	5.	2.	2.	0.06		
3 COMBINED AT	CPC	111.	12.67	28.	8.	8.	0.20		
2 COMBINED AT	CP CD	235.	12.42	44.	13.	13.	0.26		
ROUTED TO	CP RCD	234.	12.42	44.	13.	13.	0.26		

2 COMBINED AT	OUT 1	2305.	14.17	1383.	518.	499.	0.45		
ROUTED TO	ROUT 1	2305.	14.17	1383.	518.	498.	0.45		
HYDROGRAPH AT	SUB 26	4.	12.75	1.	0.	0.	0.01		
HYDROGRAPH AT	SUB 1	38.	12.17	3.	1.	1.	0.01		
HYDROGRAPH AT	SUB 2C	47.	12.17	4.	1.	1.	0.02		
2 COMBINED AT	CP 2C	85.	12.17	7.	2.	2.	0.03		
ROUTED TO	CP 4	64.	12.25	7.	2.	2.	0.03	0.33	12.25
HYDROGRAPH AT	SUB 2B	54.	12.17	5.	1.	1.	0.02		
HYDROGRAPH AT	SUB 2A	207.	12.25	18.	5.	5.	0.08		
3 COMBINED AT	CP 4	320.	12.25	29.	9.	8.	0.14		
ROUTED TO	CP 5	310.	12.25	30.	9.	8.	0.14		
HYDROGRAPH AT	SUB 4	141.	12.17	12.	3.	3.	0.05		
2 COMBINED AT	CP 5	428.	12.25	41.	12.	12.	0.18		
ROUTED TO	CP 6	242.	12.42	41.	12.	12.	0.18	2.90	12.42
HYDROGRAPH AT	SUB 3	161.	12.17	12.	4.	3.	0.04		
ROUTED TO	CP 5A	140.	12.25	12.	4.	3.	0.04		
ROUTED TO	CP 6	70.	12.42	12.	3.	3.	0.04	2.18	12.42
HYDROGRAPH AT	SUB 5	27.	12.25	3.	1.	1.	0.03		
3 COMBINED AT	CP 6	328.	12.42	56.	16.	14.	0.26		
ROUTED TO	CP 7	316.	12.50	56.	16.	16.	0.26	3.17	12.50
HYDROGRAPH AT	SUB 6	4.	12.42	0.	0.	0.	0.01		
2 COMBINED AT	CP 7	319.	12.50	56.	16.	16.	0.27		
ROUTED TO	CP A	318.	12.50	56.	16.	16.	0.27		
HYDROGRAPH AT	SUB 7	111.	12.25	12.	3.	3.	0.04		
2 COMBINED AT	CP A	367.	12.42	68.	20.	19.	0.31		
ROUTED TO	CP RA	367.	12.50	69.	20.	19.	0.31		
2 COMBINED AT	CP AB	370.	12.50	69.	20.	19.	0.32		
ROUTED TO	CP RAB	367.	12.58	69.	20.	19.	0.32		
2 COMBINED AT	OUT 2	2331.	14.17	1437.	538.	518.	0.77		

*** NORMAL END OF HEC-1 ***

APPENDIX B

HYDROLOGIC ANALYSIS OF OFFSITE DRAINAGE AFFECTING THE PROPOSED RED MOUNTAIN TRAFFIC INTERCHANGE

100-YEAR FLOOD EVENT

CONCENTRATION POINT A

SIMONS, LI & ASSOCIATES, INC

APRIL 1989

```
****************************************
*                                      *
*   FLOOD HYDROGRAPH PACKAGE  (HEC-1)  *
*            FEBRUARY 1981             *
*           REVISED 31 JAN 85          *
*                                      *
*  RUN DATE      26-J    TIME      08:3 *
*                                      *
****************************************
```

```
****************************************
*                                      *
*    U.S. ARMY CORPS OF ENGINEERS      *
*  THE HYDROLOGIC ENGINEERING CENTER   *
*          609 SECOND STREET           *
*       DAVIS, CALIFORNIA 95616        *
*  (916) 440-3285 OR (FTS) 448-3285    *
*                                      *
****************************************
```

```
X     X  XXXXXXX   XXXXX          X
X     X  X       X     X        XX
X     X  X       X              X
XXXXXXX  XXXX    X       XXXXX  X
X     X  X       X              X
X     X  X       X     X        X
X     X  XXXXXXX   XXXXX        XXX
```

THIS PROGRAM REPLACES ALL PREVIOUS VERSIONS OF HEC-1 KNOWN AS HEC1 (JAN 73), HEC1GS, HEC1DB, AND HEC1KW.

THE DEFINITIONS OF VARIABLES -RTIMP- AND -RTIOR- HAVE CHANGED FROM THOSE USED WITH THE 1973-STYLE INPUT STRUCTURE. THE DEFINITION OF -AMSKK- ON RM-CARD WAS CHANGED WITH REVISIONS DATED 28 SEP 81. THE VERSION RELEASED 31JAN85 CONTAINS NEW OPTIONS ON RL AND BA RECORDS, AND ADDS THE HL RECORD. SEE JANUARY 1985 INPUT DESCRIPTION FOR NEW DEFINITIONS.

```
LINE          ID.......1.......2.......3.......4.......5.......6.......7.......8.......9......10

  1           ID        SIMONS, LI & ASSOCIATES, INC.
  2           ID        CONSULTING CIVIL ENGINEERS
  3           ID        4600 S. MILL AVE., SUITE 280
  4           ID        TEMPE, ARIZONA
  5           ID
  6           ID        OUTER LOOP HIGHWAY
  7           ID        (UNIVERSITY DRIVE TO SALT RIVER)
  8           ID
  9           ID        HYDROLOGIC ANALYSES OF OFFSITE DRAINAGE
 10           ID        AFFECTING THE PROPOSED
 11           ID        RED MOUNTAIN TRAFFIC INTERCHANGE
 12           ID
 13           ID        100-YEAR FLOOD EVENT
 14           ID
 15           ID        CONCENTRATION POINT A
 16           ID
 17           ID        KINEMATIC WAVE AND MODIFIED-PULS ROUTING
 18           ID        24-HOUR HYPOTHETICAL STORM DISTRIBUTION
 19           ID        24-HOUR CURVE NUMBERS
 20           ID
 21           ID        APRIL 1989
 22           ID
 23           ID        RUN BY HNTB  MAY 1989
 24           ID
 25           IT      5  1JAN89       0     300
              *DIAGRAM
 26           IO      5

 27           KK   SUB 1
 28           KM       RUNOFF FROM SUB-BASIN 1
 29           BA  0.0100
 30           PH                   0.72    1.41    2.48    2.72    2.89    3.20    3.54    3.90
 31           LS      0      98                   60.40
 32           UK     50    0.01     0.1      74
 33           UK     30    0.01    0.25      26
 34           RK    515   0.007    0.02  0.0054    TRAP       0      50
 35           RK    250   0.007    0.02            TRAP       0      50
 36           KM       RUNOFF FROM SUB-BASIN 2C

 37           KK  SUB 2C
 38           BA  0.0188
 39           LS      0      98                   68.20
 40           UK     55    0.01     0.1      45
 41           UK     55    0.01    0.25      55
 42           RK    450   0.007    0.02  0.0047    TRAP       0      50
 43           RK    790   0.007    0.02            TRAP       0      50

 44           KK   CP 2C
 45           KM       COMBINE RUNOFF FROM SUB-BASINS 1 AND 2C
 46           HC      2
```

```
LINE          ID.......1.......2.......3.......4.......5.......6.......7.......8.......9.......10

  47          KK    CP 4
  48          KM       ROUTE RUNOFF FROM SUB-BASINS 1-2C TO SUB-BASIN 4
  49          RS       1    FLOW      -1
  50          RC   0.030   0.020   0.035    1510   0.007
  51          RX       0      25      25      25      90      90     120     120
  52          RY    0.75     0.5     0.5       0       0     0.5    0.75    0.75

  53          KK  SUB 2B
  54          KM       RUNOFF FROM SUB-BASIN 2B
  55          BA  0.0224
  56          LS       0      98                   68.20
  57          UK      55    0.01     0.1      45
  58          UK      55    0.01    0.25      55
  59          RK     983   0.007    0.02  0.0112    TRAP       0      50
  60          RK     530   0.007    0.02            TRAP       0      50

  61          KK  SUB 2A
  62          KM       RUNOFF FROM SUB-BASIN 2A
  63          BA  0.0848
  64          LS       0      98                   68.20
  65          UK      55    0.01     0.1      51
  66          UK      55    0.01    0.25      49
  67          RK    1308   0.007    0.02  0.0089    TRAP       0      50
  68          RK     587   0.007    0.02  0.0283    TRAP       0      50
  69          RK    1510   0.007    0.02            TRAP       0      50

  70          KK    CP 4
  71          KM       COMBINE RUNOFF FROM SUB-BASINS 1-2C,2A,2B
  72          HC       3

  73          KK    CP 5
  74          KM       ROUTE (KINEMATIC) RUNOFF FROM SUB-BASINS 1-2 TO SUB-BASIN 5
  75          RK     330   0.007   0.020            TRAP       0      50

  76          KK   SUB 4
  77          KM       RUNOFF FROM SUB-BASIN 4
  78          BA  0.0460
  79          LS       0      98                   60.40
  80          UK     100    0.01     0.1      70
  81          UK     100    0.01    0.25      30
  82          RK     200   0.007    0.02  0.0028    TRAP       0      50
  83          RK     380   0.007    0.02  0.0153    TRAP       0      50
  84          RK     300   0.007    0.02            TRAP       0      50

  85          KK    CP 5
  86          KM       COMBINE RUNOFF FROM SUB-BASINS 1-2 AND 4
  87          HC       2

  88          KK    CP 6
  89          KM       ROUTE RUNOFF FROM SUB-BASINS 1-2,4 TO SUB-BASIN 6
  90          RS       1    FLOW      -1
  91          RC   0.060   0.030   0.060    1140   0.007
  92          RX       0     360   360.5     363     368   370.5     730     730
  93          RY     2.8     2.5     2.5       0       0     2.5     2.8     2.8
```

```
LINE          ID.......1.......2.......3.......4.......5.......6.......7.......8.......9......10

  94          KK   SUB 3
  95          KM       RUNOFF FROM SUB-BASIN 3
  96          BA  0.0438
  97          LS       0      98                    68.20
  98          UK      75    0.01     0.1      74
  99          UK      40    0.01    0.25      26
 100          RK     350   0.007    0.02  0.0031    TRAP       0      50
 101          RK     275   0.007    0.02            TRAP       0      50

 102          KK   CP 5A
 103          KM       ROUTE (KINEMATIC) RUNOFF FROM SUB-BASIN 3 TO SUB-BASIN 5
 104          RK     700   0.007    0.02            TRAP       0      50

 105          KK    CP 6
 106          KM       ROUTE RUNOFF FROM SUB-BASIN 3 TO SUB-BASIN 6
 107          RS       1    FLOW      -1
 108          RC   0.040   0.025   0.060    1040   0.007
 109          RX       0     400     400     402     403     405     765     765
 110          RY     2.2       2       2       0       0       2     2.2     2.2

 111          KK   SUB 5
 112          KM       RUNOFF FROM SUB-BASIN 5
 113          BA  0.0314
 114          LS       0      98                    65.00
 115          UK      40  0.0045     0.1       3
 116          UK      40  0.0045    0.25      97
 117          RK     595   0.007    0.02  0.0024    TRAP       0      50
 118          RK    1140   0.007    0.03            TRAP       5       1

 119          KK    CP 6
 120          KM       COMBINE RUNOFF FROM SUB-BASINS 1-5 AT 6
 121          HC       3

 122          KK    CP 7
 123          KM       ROUTE RUNOFF FROM SUB-BASINS 1-5 TO SUB-BASIN 7
 124          RS       1    FLOW      -1
 125          RC   0.025   0.025   0.025    1850   0.003
 126          RX       0       0       0      30      35      65      65      65
 127          RY       6       6       6       0       0       6       6       6

 128          KK   SUB 6
 129          KM       RUNOFF FROM SUB-BASIN 6
 130          BA  0.0076
 131          LS       0    60.4
 132          UK      60    0.17    0.25     100
 133          RK    1850   0.003   0.025            TRAP       5       5

 134          KK    CP 7
 135          KM       COMBINE RUNOFF FROM SUB-BASINS 1-6 AT 7
 136          HC       2
```

```
LINE          ID.......1.......2.......3.......4.......5.......6.......7.......8.......9......10

 137          KK    CP A
 138          KM       ROUTE (KINEMATIC) RUNOFF FROM SUB-BASINS 1-6 TO CONCENTRATION POINT A
 139          RK     500   0.007   0.020            TRAP       6       1

 140          KK   SUB 7
 141          KM       RUNOFF FROM SUB-BASIN 7
 142          BA  0.0440
 143          LS       0      98                   85.00
 144          UK     300   0.005    0.10      50
 145          UK     300   0.005    0.15      50
 146          RK     500   0.007   0.020            TRAP       6       1

 147          KK    CP A
 148          KM       COMBINE RUNOFF FROM SUB-BASINS 1-7 AT CONCENTRATION POINT A
 149          KO       3                        1
 150          HC       2
 151          ZZ
```

RUNOFF SUMMARY
FLOW IN CUBIC FEET PER SECOND
TIME IN HOURS, AREA IN SQUARE MILES

OPERATION	STATION	PEAK FLOW	TIME OF PEAK	AVERAGE FLOW FOR MAXIMUM PERIOD 6-HOUR	24-HOUR	72-HOUR	BASIN AREA	MAXIMUM STAGE	TIME OF MAX STAGE
HYDROGRAPH AT	SUB 1	38.	12.17	3.	1.	1.	0.01		
HYDROGRAPH AT	SUB 2C	47.	12.17	4.	1.	1.	0.02		
2 COMBINED AT	CP 2C	85.	12.17	7.	2.	2.	0.03		
ROUTED TO	CP 4	64.	12.25	7.	2.	2.	0.03	0.33	12.25
HYDROGRAPH AT	SUB 2B	54.	12.17	5.	1.	1.	0.02		
HYDROGRAPH AT	SUB 2A	207.	12.25	18.	5.	5.	0.08		
3 COMBINED AT	CP 4	320.	12.25	29.	9.	8.	0.14		
ROUTED TO	CP 5	310.	12.25	30.	9.	8.	0.14		
HYDROGRAPH AT	SUB 4	141.	12.17	12.	3.	3.	0.05		
2 COMBINED AT	CP 5	428.	12.25	41.	12.	12.	0.18		
ROUTED TO	CP 6	242.	12.42	41.	12.	12.	0.18	2.90	12.42
HYDROGRAPH AT	SUB 3	161.	12.17	12.	4.	3.	0.04		
ROUTED TO	CP 5A	140.	12.25	12.	4.	3.	0.04		
ROUTED TO	CP 6	70.	12.42	12.	3.	3.	0.04	2.18	12.42
HYDROGRAPH AT	SUB 5	27.	12.25	3.	1.	1.	0.03		
3 COMBINED AT	CP 6	328.	12.42	56.	16.	16.	0.26		
ROUTED TO	CP 7	316.	12.50	56.	16.	16.	0.26	3.17	12.50
HYDROGRAPH AT	SUB 6	4.	12.42	0.	0.	0.	0.01		
2 COMBINED AT	CP 7	319.	12.50	56.	16.	16.	0.27		
ROUTED TO	CP A	318.	12.50	56.	16.	16.	0.27		
HYDROGRAPH AT	SUB 7	111.	12.25	12.	3.	3.	0.04		
2 COMBINED AT	CP A	367.	12.42	68.	20.	19.	0.31		

*** NORMAL END OF HEC-1 ***

HYDROLOGIC ANALYSIS OF OFFSITE DRAINAGE AFFECTING THE PROPOSED RED MOUNTAIN TRAFFIC INTERCHANGE

100-YEAR FLOOD EVENT

CONCENTRATION POINTS B,C AND D

SIMONS, LI & ASSOCIATES, INC

APRIL 1989

```
*****************************************
*                                       *
*   FLOOD HYDROGRAPH PACKAGE  (HEC-1)   *
*            FEBRUARY 1981              *
*          REVISED 31 JAN 85            *
*                                       *
* RUN DATE      26-J    TIME      08:3 *
*                                       *
*****************************************
```

```
*****************************************
*                                       *
*    U.S. ARMY CORPS OF ENGINEERS       *
*  THE HYDROLOGIC ENGINEERING CENTER    *
*          609 SECOND STREET            *
*       DAVIS, CALIFORNIA 95616         *
*  (916) 440-3285 OR (FTS) 448-3285     *
*                                       *
*****************************************
```

```
X     X  XXXXXXX   XXXXX          X
X     X  X       X     X        XX
X     X  X       X              X
XXXXXXX  XXXX    X       XXXXX  X
X     X  X       X              X
X     X  X       X     X        X
X     X  XXXXXXX   XXXXX        XXX
```

THIS PROGRAM REPLACES ALL PREVIOUS VERSIONS OF HEC-1 KNOWN AS HEC1 (JAN 73), HEC1GS, HEC1DB, AND HEC1KW.

THE DEFINITIONS OF VARIABLES -RTIMP- AND -RTIOR- HAVE CHANGED FROM THOSE USED WITH THE 1973-STYLE INPUT STRUCTURE. THE DEFINITION OF -AMSKK- ON RM-CARD WAS CHANGED WITH REVISIONS DATED 28 SEP 81. THE VERSION RELEASED 31JAN85 CONTAINS NEW OPTIONS ON RL AND BA RECORDS, AND ADDS THE HL RECORD. SEE JANUARY 1985 INPUT DESCRIPTION FOR NEW DEFINITIONS.

```
LINE          ID.......1.......2.......3.......4.......5.......6.......7.......8.......9......10

  1           ID        SIMONS, LI & ASSOCIATES, INC.
  2           ID        CONSULTING CIVIL ENGINEERS
  3           ID        4600 S. MILL. AVE., SUITE 280
  4           ID        TEMPE, ARIZONA
  5           ID
  6           ID        OUTER LOOP HIGHWAY
  7           ID        (UNIVERSITY DRIVE TO SALT RIVER)
  8           ID
  9           ID        HYDROLOGIC ANALYSES OF OFFSETE DRAINAGE
 10           ID        AFFECTING THE PROPOSED
 11           ID        RED MOUNTAIN TRAFFIC INTERCHANGE
 12           ID
 13           ID        100-YEAR FLOOD EVENT
 14           ID
 15           ID        CONCENTRATION POINTS B,C AND D
 16           ID
 17           ID        KINEMATIC WAVE AND MODIFIED-PULS ROUTING
 18           ID        24-HOUR HYPOTHETICAL STORM DISTRIBUTION
 19           ID        24-HOUR CURVE NUMBERS
 20           ID
 21           ID        APRIL 1989
 22           ID
 23           ID        RUN BY HNTB  MAY 1989
 24           ID
 25           IT      5  1JAN89       0     300
              *DIAGRAM
 26           IO      5

 27           KK  SUB22D
 28           KM      RUNOFF FROM SUB-BASIN 22D
 29           BA  0.0276
 30           PH                  0.72    1.41    2.48    2.72    2.89    3.20    3.54    3.90
 31           LS      0     98                   68.20
 32           UK     35   0.01     0.1      70
 33           UK     35   0.01    0.20      30
 34           RK    800  0.005    0.02  0.0055    TRAP       0      50
 35           RK     75  0.005    0.02            TRAP       0      50

 36           KK   CP22B
 37           KM      ROUTE RUNOFF FROM SUB-BASIN 22D TO SUB-BASIN 22B
 38           RS      1   FLOW      -1
 39           RC  0.035  0.020   0.035     420  0.0050
 40           RX      0      0      10      10      35      35      85      85
 41           RY    0.6    0.6     0.5       0       0     0.5    0.75    0.75

 42           KK  SUB22C
 43           KM      RUNOFF FROM SUB-BASIN 22C
 44           BA  0.0170
 45           LS      0     98                   68.20
 46           UK     35   0.01     0.1      70
 47           UK     35   0.01    0.20      30
 48           RK    767  0.005    0.02  0.0057    TRAP       0      50
 49           RK    300  0.005    0.02            TRAP       0      50
```

```
LINE          ID.......1.......2.......3.......4.......5.......6.......7.......8.......9......10

  50          KK   CP22B
  51          KM       COMBINE RUNOFF FROM SUB-BASINS 22C AND 22D AT SUB-BASIN 22B
  52          HC       2

  53          KK   CP  D
  54          KM       ROUTE COMBINED RUNOFF TO CONCENTRATION POINT D
  55          RS       1    FLOW      -1
  56          RC   0.035   0.027   0.035     470  0.0050
  57          RX       0       0     100     100     130     130     220     220
  58          RY     0.8     0.8     0.5       0       0     0.5     0.8     0.8

  59          KK  SUB22B
  60          KM       RUNOFF FROM SUB-BASIN 22B
  61          BA  0.0096
  62          LS       0      98                  68.20
  63          UK      35    0.01     0.1      70
  64          UK      35    0.01    0.20      30
  65          RK     625   0.005    0.02  0.0057    TRAP       0      50
  66          RK     330   0.005   0.026            TRAP       0     100

  67          KK  SUB22A
  68          KM       RUNOFF FROM SUB-BASIN 22A
  69          KO       3
  70          BA  0.0109
  71          LS       0      98                  73.00
  72          UK     300    0.01     0.1       9
  73          UK     200    0.01    0.15      91
  74          RK    1250   0.005    0.02            TRAP       0     200

  75          KK    CP D
  76          KM       COMBINE RUNOFF FROM SUB-BASINS 22C-D,22B,AND 22A AT CONCENTRATION POINT D
  77          KO       3                        1
  78          HC       3

  79          KK  SUB 21
  80          KM       RUNOFF FROM SUB-BASIN 21
  81          BA  0.0257
  82          LS       0      98                  60.40
  83          UK     100    0.01     0.1      85
  84          UK     100    0.01    0.25      15
  85          RK     477   0.005    0.02  0.0085    TRAP       0      50
  86          RK    1280   0.005    0.02            TRAP       0      50

  87          KK    CP24
  88          KM       ROUTE RUNOFF FROM SUB-BASIN 21 TO SUB-BASIN 24
  89          RS       1    FLOW      -1
  90          RC   0.035   0.035   0.035    1340  0.0024
  91          RX       0       0       0     825     825    1650    1650    1650
  92          RY       2       2       2       0       0       2       2       2
```

```
LINE          ID.......1.......2.......3.......4.......5.......6.......7.......8.......9......10

 93           KK  SUB 23
 94           KM      RUNOFF FROM SUB-BASIN 23
 95           BA  0.0828
 96           LS      0      98                   73.00
 97           UK    300  0.0024     0.1       1
 98           UK    300  0.0024    0.15      99
 99           RK   1350  0.0024   0.035  0.0166    TRAP       0      50
100           RK   1650  0.0024    0.03            TRAP       2       1

101           KK   CP24
102           KM      COMBINE RUNOFF FROM SUB-BASINS 21 AND 23
103           HC      2

104           KK   CPC1
105           KM      ROUTE RUNOFF FROM SUB-BASINS 21-23 TO CONCENTRATION POINT C
106           RS      1   FLOW      -1
107           RC  0.035  0.030   0.027     640  0.0024
108           RX      0      0     200     203     204     207     257     287
109           RY    3.9    3.9     2.5       0       0     2.5     2.5     6.5

110           KK  SUB 24
111           KM      RUNOFF FROM SUB-BASIN 24
112           BA  0.0305
113           LS      0      98                   73.00
114           UK     75  0.0024     0.1      25
115           UK    200  0.0024    0.15      75
116           RK    800  0.0024    0.02  0.0153    TRAP       0      50
117           RK    630  0.0024    0.03            TRAP       2       1

118           KK  SUB 25
119           KM      RUNOFF FROM SUB-BASIN 25
120           BA  0.0588
121           LS      0      98                   64.00
122           UK     50   0.003     0.1       6
123           UK    250   0.003    0.15      94
124           RK    587   0.003   0.035  0.0196    TRAP       0     100
125           RK   1210   0.003   0.035            TRAP       0     100

126           KK    CPC
127           KM      COMBINE RUNOFF FROM SUB-BASINS 21-23,24,25 AT CONCENTRATION POINT C
128           KO      3                        1
129           HC      3

130           KK  SUB 26
131           KM      RUNOFF FROM SUB-BASIN 26 TO CONCENTRATION POINT B
132           KO      3                        1
133           BA  0.0107
134           LS      0      64
135           UK    200  0.0117    0.15     100
136           RK   1200   0.002   0.035            TRAP       0     100
137           ZZ
```

RUNOFF SUMMARY
FLOW IN CUBIC FEET PER SECOND
TIME IN HOURS, AREA IN SQUARE MILES

OPERATION	STATION	PEAK FLOW	TIME OF PEAK	AVERAGE FLOW FOR MAXIMUM PERIOD 6-HOUR	24-HOUR	72-HOUR	BASIN AREA	MAXIMUM STAGE	TIME OF MAX STAGE
HYDROGRAPH AT	SUB22D	96.	12.17	7.	2.	2.	0.03		
ROUTED TO	CP22B	86.	12.25	7.	2.	2.	0.03	0.75	12.25
HYDROGRAPH AT	SUB22C	57.	12.17	4.	1.	1.	0.02		
2 COMBINED AT	CP22B	133.	12.25	12.	3.	3.	0.04		
ROUTED TO	CP D	120.	12.25	12.	3.	3.	0.04	0.85	12.25
HYDROGRAPH AT	SUB22B	32.	12.17	3.	1.	1.	0.01		
HYDROGRAPH AT	SUB22A	13.	12.33	2.	0.	0.	0.01		
3 COMBINED AT	CP D	159.	12.25	16.	5.	4.	0.07		
HYDROGRAPH AT	SUB 21	84.	12.25	7.	2.	2.	0.03		
ROUTED TO	CP24	37.	12.42	7.	2.	2.	0.03	0.36	12.42
HYDROGRAPH AT	SUB 23	47.	12.67	11.	3.	3.	0.08		
2 COMBINED AT	CP24	78.	12.58	18.	5.	5.	0.11		
ROUTED TO	CPC1	74.	12.75	18.	5.	5.	0.11	2.85	12.75
HYDROGRAPH AT	SUB 24	45.	12.25	5.	2.	2.	0.03		
HYDROGRAPH AT	SUB 25	21.	12.58	5.	2.	2.	0.06		
3 COMBINED AT	CPC	111.	12.67	28.	8.	8.	0.20		
HYDROGRAPH AT	SUB 26	4.	12.75	1.	0.	0.	0.01		

*** NORMAL END OF HEC-1 ***

APPENDIX C

INTERIM CONDITIONS HYDROLOGY

INTERIM CONDITIONS HEC-1 MODEL
10-YEAR EVENT

```
****************************************
*                                      *
*  FLOOD HYDROGRAPH PACKAGE  (HEC-1)   *
*            FEBRUARY 1981             *
*          REVISED 31 JAN 85           *
*                                      *
* RUN DATE      27-J    TIME      16:0 *
*                                      *
****************************************
```

```
****************************************
*                                      *
*    U.S. ARMY CORPS OF ENGINEERS      *
*  THE HYDROLOGIC ENGINEERING CENTER   *
*          609 SECOND STREET           *
*       DAVIS, CALIFORNIA 95616        *
*  (916) 440-3285 OR (FTS) 448-3285    *
*                                      *
****************************************
```

```
X     X  XXXXXXX   XXXXX          X
X     X  X       X     X        XX
X     X  X       X              X
XXXXXXX  XXXX    X       XXXXX  X
X     X  X       X              X
X     X  X       X     X        X
X     X  XXXXXXX   XXXXX        XXX
```

THIS PROGRAM REPLACES ALL PREVIOUS VERSIONS OF HEC-1 KNOWN AS HEC1 (JAN 73), HEC1GS, HEC1DB, AND HEC1KW.

THE DEFINITIONS OF VARIABLES -RTIMP- AND -RTIOR- HAVE CHANGED FROM THOSE USED WITH THE 1973-STYLE INPUT STRUCTURE. THE DEFINITION OF -AMSKK- ON RM-CARD WAS CHANGED WITH REVISIONS DATED 28 SEP 81. THE VERSION RELEASED 31JAN85 CONTAINS NEW OPTIONS ON RL AND BA RECORDS, AND ADDS THE HL RECORD. SEE JANUARY 1985 INPUT DESCRIPTION FOR NEW DEFINITIONS.

```
LINE          ID.......1.......2.......3.......4.......5.......6.......7.......8.......9......10

  1           ID       OUTER LOOP - ALTERNATIVES ANALYSIS HYDRAULIC MODEL
  2           ID       DEEP CONDUIT OUTFALL (SIPHON TUNNEL) ALTERNATIVE
  3           ID       10-YR 24-HR SCS METHOD HYDROLOGY
  4           IT      15       1       0     300
  5           IO       5             200

  6           KK       M
  7           KM       BOYLE STATION 4 HYDROGRAPH AT MANHATTON
  8           IN       5       1       0
  9           QI       0       0       0       0       0       0       0       0       0       0
 10           QI       0       0       0       0       0       0       0       0       0       0
 11           QI       0       0       0       0       0       0       0       0       0       0
 12           QI       0       0       0       0       0       0       0       0       0       0
 13           QI       0       0       0       0       0       0       0       0       0       0
 14           QI       0       0       0       0       0       0       0       0       0       0
 15           QI       0       0       0       0       0       0       0       0       0       0
 16           QI       0       0       0       0       0       0       0       0       0       0
 17           QI       0       0       0       0       0       0       0       0       0       0
 18           QI       0       0       0       0       0       0       0       0       0       0
 19           QI       0       0       0       0       0       0       0       0       0       0
 20           QI       0       0       0       0       0       0       0       0       0       0
 21           QI       0       0       0       0       0       0       0       0       0       0
 22           QI       0       0       0       0       0       0       0       0       0       0
 23           QI       0       0       1       1       3       6      12      20      31      41
 24           QI      53      63      71      75      76      73      68      62      55      49
 25           QI      42      36      31      27      24      21      18      16      15      13
 26           QI      12      11      10      10       9       9       8       8       7       7
 27           QI       7       6       6       6       5       5       5       5       5       4
 28           QI       4       4       4       4       3       3       3       3       3       3
 29           QI       3       3       3       3       3       3       2       2       2       2
 30           QI       2       2       2       2       2       2       2       2       2       2
 31           QI       2       2       2       2       2       2       2       2       2       2
 32           QI       1       1       1       1       1       1       1       1       1       1
 33           QI       1       1       1       1       1       1       1       1       1       1
 34           QI       1       1       1       1       1       1       1       1       1       1
 35           QI       1       1       1       1       1       1       1       1       1       1
 36           QI       1       1       1       1       1       1       1       1       1       1
 37           QI       1       1       1       1       1       1       1       1       1       1
 38           QI       1       1       1       1       0       0       0       0       0       0
 39           QI       0       0       0       0       0       0       0       0       0       0

 40           KK       N
 41           KM       BOYLE STATION 13 HYDROGRAPH AT GENEVA
 42           IN       5       1       0
 43           QI       0       0       0       0       0       0       0       0       0       0
 44           QI       0       0       0       0       0       0       0       0       0       0
 45           QI       0       0       0       0       0       0       0       0       0       0
 46           QI       0       0       0       0       0       0       0       0       0       0
 47           QI       0       0       0       0       0       0       0       0       0       0
 48           QI       0       0       0       0       0       0       0       0       0       0
 49           QI       0       0       0       0       0       0       0       0       0       0
 50           QI       0       0       0       0       0       0       0       0       0       0
 51           QI       0       0       0       0       0       0       0       0       0       0
 52           QI       0       0       0       0       0       0       0       0       0       0
 53           QI       0       0       0       0       0       0       0       0       0       0
```

```
LINE          ID.......1.......2.......3.......4.......5.......6.......7.......8.......9......10

  54          QI       0       0       0       0       0       0       0       0       0       0
  55          QI       0       0       0       0       0       0       0       0       0       0
  56          QI       0       0       0       0       0       0       0       0       0       0
  57          QI       0       0       1       2       4       8      16      27      41      58
  58          QI      75      91     101     103     100      94      86      76      46      57
  59          QI      48      41      35      31      27      24      21      19      17      16
  60          QI      14      13      12      12      11      10      10       9       9       9
  61          QI       8       8       8       7       7       7       6       6       6       5
  62          QI       5       5       5       5       4       4       4       4       4       4
  63          QI       4       4       4       3       3       3       3       3       3       3
  64          QI       3       3       3       3       3       3       3       3       3       3
  65          QI       2       2       2       2       2       2       2       2       2       2
  66          QI       2       2       2       2       2       2       2       2       2       2
  67          QI       2       2       2       2       2       2       2       2       2       1
  68          QI       1       1       1       1       1       1       1       1       1       1
  69          QI       1       1       1       1       1       1       1       1       1       1
  70          QI       1       1       1       1       1       1       1       1       1       1
  71          QI       1       1       1       1       1       1       1       1       1       1
  72          QI       1       1       1       1       1       1       0       0       0       0
  73          QI       0       0       0       0       0       0       0       0       0       0

  74          KK     PSC
  75          KM       OUTFLOW HYDROGRAPH FROM SOUTHERN AVE PUMP STATION - OCT 86 BOYLE REPORT
  76          IN       5       1       0
  77          QI       0       0       0       0       0       0       0       0       0       0
  78          QI       0       0       0       0       0       0       0       0       0       0
  79          QI       0       0       0       0       0       0       0       0       0       0
  80          QI       0       0       0       0       0       0       0       0       0       0
  81          QI       0       0       0       0       0       0       0       0       0       0
  82          QI       0       0       0       0       0       0       0       0       0       0
  83          QI       0       0       0       0       0       0       0       0       0       0
  84          QI       0       0       0       0       0       0       0       0       0       0
  85          QI       0       0       0       0       0       0       0       0       0       0
  86          QI       0       0       0       0       0       0       0       0       0       0
  87          QI       0       0       0       0       0       0       0       0       0       0
  88          QI       0       0       0       0       0       0       0       0       0       0
  89          QI       0       0       0       0       0       0       0       0       0       0
  90          QI       0       0       0       0       0       0       0       0       0       2
  91          QI       6      13      22      40      40      40      40      40      40      40
  92          QI      40      40      40      40      40      40      40      40      40      40
  93          QI       0       0       0       0       0       0       0       0       0       0
  94          QI       0       0       0       0       0       0       0       0       0       0

  95          KK     RPSC
  96          KM       ROUTE PUMP STATION FLOW TO DROP SHAFT 4
  97          RK     600   .0013    .018            CIRC     3.5

  98          KK     DS4
  99          KM       COMBINE HYDROGRAPHS AT GENEVA (DROP SHAFT 4 INFLOW)
 100          HC       2
```

```
LINE          ID.......1.......2.......3.......4.......5.......6.......7.......8.......9......10

 101          KK      0
 102          KM       BOYLE STATION 16 HYDROGRAPH AT CONCORDA (DROP SHAFT 3 INFLOW)
 103          IN      5       1       0
 104          QI      0       0       0       0       0       0       0       0       0       0
 105          QI      0       0       0       0       0       0       0       0       0       0
 106          QI      0       0       0       0       0       0       0       0       0       0
 107          QI      0       0       0       0       0       0       0       0       0       0
 108          QI      0       0       0       0       0       0       0       0       0       0
 109          QI      0       0       0       0       0       0       0       0       0       0
 110          QI      0       0       0       0       0       0       0       0       0       0
 111          QI      0       0       0       0       0       0       0       0       0       0
 112          QI      0       0       0       0       0       0       0       0       0       0
 113          QI      0       0       0       0       0       0       0       0       0       0
 114          QI      0       0       0       0       0       0       0       0       0       0
 115          QI      0       0       0       0       0       0       0       0       0       0
 116          QI      0       0       0       0       0       0       0       0       0       0
 117          QI      0       0       0       0       0       0       0       0       0       0
 118          QI      0       0       0       1       2       5      10      17      27      38
 119          QI     47      54      57      57      55      50      44      38      32      27
 120          QI     23      20      17      14      13      11      10       9       8       7
 121          QI      7       6       6       6       5       5       5       5       4       4
 122          QI      4       4       4       3       3       3       3       3       3       3
 123          QI      3       2       2       2       2       2       2       2       2       2
 124          QI      2       2       2       2       2       2       2       1       1       1
 125          QI      1       1       1       1       1       1       1       1       1       1
 126          QI      1       1       1       1       1       1       1       1       1       1
 127          QI      1       1       1       1       1       1       1       1       1       1
 128          QI      1       1       1       1       1       1       1       1       1       1
 129          QI      1       1       1       1       1       1       1       1       1       1
 130          QI      1       0       0       0       0       0       0       0       0       0
 131          QI      0       0       0       0       0       0       0       0       0       0
 132          QI      0       0       0       0       0       0       0       0       0       0
 133          QI      0       0       0       0       0       0       0       0       0       0
 134          QI      0       0       0       0       0       0       0       0       0       0

 135          KK      P
 136          KM       BOYLE STATION 23 HYDROGRAPH AT BROADWAY
 137          IN      5       1       0
 138          QI      0       0       0       0       0       0       0       0       0       0
 139          QI      0       0       0       0       0       0       0       0       0       0
 140          QI      0       0       0       0       0       0       0       0       0       0
 141          QI      0       0       0       0       0       0       0       0       0       0
 142          QI      0       0       0       0       0       0       0       0       0       0
 143          QI      0       0       0       0       0       0       0       0       0       0
 144          QI      0       0       0       0       0       0       0       0       0       0
 145          QI      0       0       0       0       0       0       0       0       0       0
 146          QI      0       0       0       0       0       0       0       0       0       0
 147          QI      0       0       0       0       0       0       0       0       0       0
 148          QI      0       0       0       0       0       0       0       0       0       0
 149          QI      0       0       0       0       0       0       0       0       0       0
 150          QI      0       0       0       0       0       0       0       0       0       0
 151          QI      0       0       0       0       0       0       0       0       0       0
 152          QI      0       0       0       1       1       3       6      12      16      19
 153          QI     21      22      23      23      22      21      20      18      16      14
```

```
LINE          ID.......1.......2.......3.......4.......5.......6.......7.......8.......9......10

 154          QI      12      11       9       8       7       6       6       5       5       4
 155          QI       4       4       3       3       3       3       3       3       2       2
 156          QI       2       2       2       2       2       2       2       2       1       1
 157          QI       1       1       1       1       1       1       1       1       1       1
 158          QI       1       1       1       1       1       1       1       1       1       1
 159          QI       1       1       1       1       1       1       0       0       0       0
 160          QI       0       0       0       0       0       0       0       0       0       0
 161          QI       0       0       0       0       0       0       0       0       0       0
 162          QI       0       0       0       0       0       0       0       0       0       0
 163          QI       0       0       0       0       0       0       0       0       0       0
 164          QI       0       0       0       0       0       0       0       0       0       0
 165          QI       0       0       0       0       0       0       0       0       0       0
 166          QI       0       0       0       0       0       0       0       0       0       0
 167          QI       0       0       0       0       0       0       0       0       0       0
 168          QI       0       0       0       0       0       0       0       0       0       0

 169          KK     PSB
 170          KM       OUTFLOW HYDROGRAPH FROM BROADWAY PUMP STATION - OCT 86 BOYLE REPORT
 171          IN       5       1       0
 172          QI       0       0       0       0       0       0       0       0       0       0
 173          QI       0       0       0       0       0       0       0       0       0       0
 174          QI       0       0       0       0       0       0       0       0       0       0
 175          QI       0       0       0       0       0       0       0       0       0       0
 176          QI       0       0       0       0       0       0       0       0       0       0
 177          QI       0       0       0       0       0       0       0       0       0       0
 178          QI       0       0       0       0       0       0       0       0       0       0
 179          QI       0       0       0       0       0       0       0       0       0       0
 180          QI       0       0       0       0       0       0       0       0       0       0
 181          QI       0       0       0       0       0       0       0       0       0       0
 182          QI       0       0       0       0       0       0       0       0       0       0
 183          QI       0       0       0       0       0       0       0       0       0       0
 184          QI       0       0       0       0       0       0       0       0       0       0
 185          QI       0       0       0       0       0       0       0       0       0       3
 186          QI       9      18      29      40      40      40      40      40      40      40
 187          QI      40      40      40      40      40      40      40      40      40      40
 188          QI      40      40      40      40      40      40      40      40      40      40
 189          QI       0       0       0       0       0       0       0       0       0       0
 190          QI       0       0       0       0       0       0       0       0       0       0

 191          KK     DS2
 192          KM       COMBINE HYDROGRAPHS AT BROADWAY (DROP SHAFT 2 INFLOW)
 193          HC       2

 194          KK       Q
 195          KM       BOYLE STATION 31 HYDROGRAPH AT MARYLAND
 196          IN       5       1       0
 197          QI       0       0       0       0       0       0       0       0       0       0
 198          QI       0       0       0       0       0       0       0       0       0       0
 199          QI       0       0       0       0       0       0       0       0       0       0
 200          QI       0       0       0       0       0       0       0       0       0       0
 201          QI       0       0       0       0       0       0       0       0       0       0
 202          QI       0       0       0       0       0       0       0       0       0       0
 203          QI       0       0       0       0       0       0       0       0       0       0
 204          QI       0       0       0       0       0       0       0       0       0       0
 205          QI       0       0       0       0       0       0       0       0       0       0
```

```
LINE          ID.......1.......2.......3.......4.......5.......6.......7.......8.......9......10

  206         QI       0       0       0       0       0       0       0       0       0       0
  207         QI       0       0       0       0       0       0       0       0       0       0
  208         QI       0       0       0       0       0       0       0       0       0       0
  209         QI       0       0       0       0       0       0       0       0       0       0
  210         QI       0       0       0       0       0       0       0       0       0       0
  211         QI       0       0       0       0       1       4       8      15      26      39
  212         QI      52      64      74      80      82      81      77      71      63      55
  213         QI      48      42      36      31      27      24      21      19      17      16
  214         QI      15      13      12      12      11      10      10       9       9       8
  215         QI       8       8       7       7       7       6       6       6       6       5
  216         QI       5       5       5       4       4       4       4       4       4       4
  217         QI       4       3       3       3       3       3       3       3       3       3
  218         QI       3       3       3       3       3       3       3       3       2       2
  219         QI       2       2       2       2       2       2       2       2       2       2
  220         QI       2       2       2       2       2       2       2       2       2       2
  221         QI       2       2       2       2       2       1       1       1       1       1
  222         QI       1       1       1       1       1       1       1       1       1       1
  223         QI       1       1       1       1       1       1       1       1       1       1
  224         QI       1       1       1       1       1       1       1       1       1       1
  225         QI       1       1       1       1       1       1       1       1       1       1
  226         QI       1       1       1       1       1       1       0       0       0       0
  227         QI       0       0       0       0       0       0       0       0       0       0

  228         KK     PSA
  229         KM       OUTFLOW HYDROGRAPH FROM UNIVERSITY PUMP STATION - OCT 86 BOYLE REPORT
  230         IN       5       1       0
  231         QI       0       0       0       0       0       0       0       0       0       0
  232         QI       0       0       0       0       0       0       0       0       0       0
  233         QI       0       0       0       0       0       0       0       0       0       0
  234         QI       0       0       0       0       0       0       0       0       0       0
  235         QI       0       0       0       0       0       0       0       0       0       0
  236         QI       0       0       0       0       0       0       0       0       0       0
  237         QI       0       0       0       0       0       0       0       0       0       0
  238         QI       0       0       0       0       0       0       0       0       0       0
  239         QI       0       0       0       0       0       0       0       0       0       0
  240         QI       0       0       0       0       0       0       0       0       0       0
  241         QI       0       0       0       0       0       0       0       0       0       0
  242         QI       0       0       0       0       0       0       0       0       0       0
  243         QI       0       0       0       0       0       0       0       0       0       0
  244         QI       0       0       0       0       0       0       0       0       0       3
  245         QI      10      19      32      40      40      40      40      40      40      40
  246         QI      40      40      40      40      40      40      40      40      40      40
  247         QI      40      40      40      40      40      40      40      40      40      40
  248         QI      40      40       0       0       0       0       0       0       0       0
  249         QI       0       0       0       0       0       0       0       0       0       0
  250         QI       0       0       0       0       0       0       0       0       0       0

  251         KK    RPSA
  252         KM       ROUTE PUMP STATION FLOW TO DROP SHAFT 1
  253         RK     500   .0013    .018            CIRC     3.5
```

```
LINE          ID.......1.......2.......3.......4.......5.......6.......7.......8.......9.......10

 254          KK     DS1
 255          KM        COMBINE HYDROGRAPHS AT MARYLAND (DROP SHAFT 1 INFLOW)
 256          HC       2

 257          KK  TUNRES
 258          KM        INFLOW TO TUNNEL FROM TAMS AREA
 259          HC       5

 260          KK  TUNROU
 261          KM        ROUTE TAMS INFLOW THROUGH TUNNEL STORAGE
 262          RS       1    STOR       0       0
 263          SV       0    41.6    83.2    83.3    83.4    83.5
 264          SE       0      19      38      50      65      80
 265          SQ       0       0       0       0       0     300
 266          SE       0      19      28      58      80      85
 267          ZZ
```

RUNOFF SUMMARY
FLOW IN CUBIC FEET PER SECOND
TIME IN HOURS, AREA IN SQUARE MILES

OPERATION	STATION	PEAK FLOW	TIME OF PEAK	AVERAGE FLOW FOR MAXIMUM PERIOD 6-HOUR	24-HOUR	72-HOUR	BASIN AREA	MAXIMUM STAGE	TIME OF MAX STAGE
HYDROGRAPH AT	M	75.	12.75	17.	5.	2.	0.00		
HYDROGRAPH AT	N	103.	12.75	21.	6.	2.	0.00		
HYDROGRAPH AT	PSC	40.	12.00	11.	3.	1.	0.00		
ROUTED TO	RPSC	40.	12.25	11.	3.	1.	0.00		
2 COMBINED AT	DS4	143.	12.75	32.	8.	3.	0.00		
HYDROGRAPH AT	O	57.	12.75	11.	3.	1.	0.00		
HYDROGRAPH AT	P	23.	12.75	6.	1.	0.	0.00		
HYDROGRAPH AT	PSB	40.	12.00	16.	4.	1.	0.00		
2 COMBINED AT	DS2	63.	12.75	21.	5.	2.	0.00		
HYDROGRAPH AT	Q	80.	12.75	19.	5.	2.	0.00		
HYDROGRAPH AT	PSA	40.	12.00	17.	4.	1.	0.00		
ROUTED TO	RPSA	40.	12.25	17.	4.	1.	0.00		
2 COMBINED AT	DS1	120.	12.75	36.	7.	3.	0.00		
5 COMBINED AT	TUNRES	458.	12.75	117.	31.	10.	0.00		
ROUTED TO	TUNROU	0.	0.25	0.	0.	0.	0.00	27.84	24.75

*** NORMAL END OF HEC-1 ***

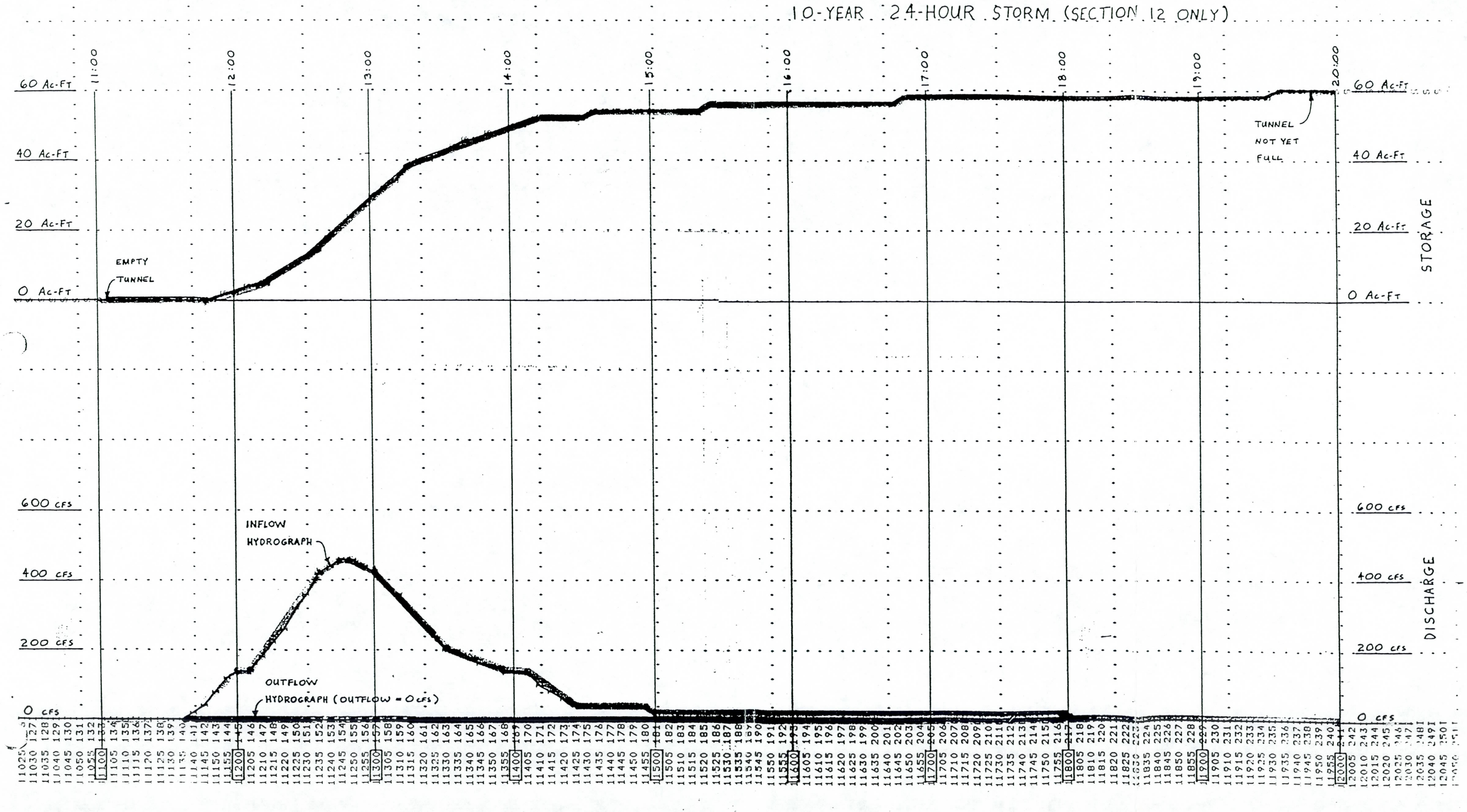
10-YEAR 24-HOUR STORM (SECTION 12 ONLY)
11:00
12:00
13:00
14:00
15:00
16:00
17:00
18:00
19:00
20:00
60 Ac-Ft
40 Ac-Ft
20 Ac-Ft
0 Ac-Ft
STORAGE
EMPTY TUNNEL
TUNNEL NOT YET FULL
600 CFS
400 CFS
200 CFS
0 CFS
DISCHARGE
INFLOW HYDROGRAPH
OUTFLOW HYDROGRAPH (OUTFLOW = 0 CFS)
TIME IN HOURS FROM BEGINNING OF STORM

INTERIM CONDITIONS HEC-1 MODEL
50-YEAR EVENT

```
*****************************************
*                                       *
*   FLOOD HYDROGRAPH PACKAGE  (HEC-1)   *
*             FEBRUARY 1981             *
*           REVISED 31 JAN 85           *
*                                       *
*  RUN DATE      27-J    TIME      15:5 *
*                                       *
*****************************************
```

```
*****************************************
*                                       *
*    U.S. ARMY CORPS OF ENGINEERS       *
*  THE HYDROLOGIC ENGINEERING CENTER    *
*          609 SECOND STREET            *
*       DAVIS, CALIFORNIA 95616         *
*  (916) 440-3285 OR (FTS) 448-3285     *
*                                       *
*****************************************
```

```
X     X  XXXXXXX   XXXXX          X
X     X  X        X     X        XX
X     X  X        X               X
XXXXXXX  XXXX     X       XXXXX   X
X     X  X        X               X
X     X  X        X     X         X
X     X  XXXXXXX   XXXXX         XXX
```

THIS PROGRAM REPLACES ALL PREVIOUS VERSIONS OF HEC-1 KNOWN AS HEC1 (JAN 73), HEC1GS, HEC1DB, AND HEC1KW.

THE DEFINITIONS OF VARIABLES -RTIMP- AND -RTIOR- HAVE CHANGED FROM THOSE USED WITH THE 1973-STYLE INPUT STRUCTURE. THE DEFINITION OF -AMSKK- ON RM-CARD WAS CHANGED WITH REVISIONS DATED 28 SEP 81. THE VERSION RELEASED 31JAN85 CONTAINS NEW OPTIONS ON RL AND BA RECORDS, AND ADDS THE HL RECORD. SEE JANUARY 1985 INPUT DESCRIPTION FOR NEW DEFINITIONS.

```
LINE          ID.......1.......2.......3.......4.......5.......6.......7.......8.......9......10

  1           ID        OUTER LOOP - ALTERNATIVES ANALYSIS HYDRAULIC MODEL
  2           ID        DEEP CONDUIT OUTFALL (SIPHON TUNNEL) ALTERNATIVE
  3           ID        50-YR 24-HR SCS METHOD HYDROLOGY
  4           IT       15       1       0     300
  5           IO        5             200

  6           KK        M
  7           KM        BOYLE STATION 4 HYDROGRAPH AT MANHATTON
  8           IN        5       1       0
  9           QI        0       0       0       0       0       0       0       0       0       0
 10           QI        0       0       0       0       0       0       0       0       0       0
 11           QI        0       0       0       0       0       0       0       0       0       0
 12           QI        0       0       0       0       0       0       0       0       0       0
 13           QI        0       0       0       0       0       0       0       0       0       0
 14           QI        0       0       0       0       0       0       0       0       0       0
 15           QI        0       0       0       0       0       0       0       0       0       0
 16           QI        0       0       0       0       0       0       0       0       0       0
 17           QI        0       0       0       0       0       0       0       0       0       0
 18           QI        0       0       0       0       0       0       0       0       0       0
 19           QI        0       0       0       0       0       0       0       0       0       0
 20           QI        0       0       0       0       0       0       0       0       0       0
 21           QI        0       0       0       0       0       0       0       0       0       0
 22           QI        0       0       0       0       1       1       1       1       1       2
 23           QI        2       3       4       6      10      16      27      40      58      78
 24           QI       97     113     124     129     128     123     114     102      91      80
 25           QI       70      61      53      46      40      36      31      28      25      22
 26           QI       20      18      17      15      14      13      12      11      11      10
 27           QI        9       9       8       8       8       7       7       7       6       6
 28           QI        6       6       6       5       5       5       5       5       5       5
 29           QI        4       4       4       4       4       4       4       4       4       4
 30           QI        4       4       4       3       3       3       3       3       3       3
 31           QI        3       3       3       3       3       3       3       3       3       3
 32           QI        3       3       3       2       2       2       2       2       2       2
 33           QI        2       2       2       2       2       2       2       2       2       2
 34           QI        2       2       2       2       2       2       2       2       2       2
 35           QI        2       2       2       2       2       2       2       2       2       2
 36           QI        2       2       2       2       2       2       2       2       2       1
 37           QI        1       1       1       1       1       1       1       1       1       1
 38           QI        1       1       1       1       1       1       1       1       0       0
 39           QI        0       0       0       0       0       0       0       0       0       0

 40           KK        N
 41           KM        BOYLE STATION 13 HYDROGRAPH AT GENEVA
 42           IN        5       1       0
 43           QI        0       0       0       0       0       0       0       0       0       0
 44           QI        0       0       0       0       0       0       0       0       0       0
 45           QI        0       0       0       0       0       0       0       0       0       0
 46           QI        0       0       0       0       0       0       0       0       0       0
 47           QI        0       0       0       0       0       0       0       0       0       0
 48           QI        0       0       0       0       0       0       0       0       0       0
 49           QI        0       0       0       0       0       0       0       0       0       0
 50           QI        0       0       0       0       0       0       0       0       0       0
 51           QI        0       0       0       0       0       0       0       0       0       0
 52           QI        0       0       0       0       0       0       0       0       0       0
 53           QI        0       0       0       0       0       0       0       0       0       0
```

```
LINE          ID.......1.......2.......3.......4.......5.......6.......7.......8.......9......10

  54          QI       0       0       0       0       0       0       0       0       0       0
  55          QI       0       0       0       0       0       0       0       0       0       0
  56          QI       0       0       1       1       1       1       1       2       2       2
  57          QI       3       4       6       8      13      22      36      55      80     111
  58          QI     140     162     171     170     166     156     142     125     109      94
  59          QI      81      70      61      53      46      41      36      32      29      26
  60          QI      23      21      19      18      17      15      14      13      13      12
  61          QI      11      11      10      10       9       9       9       8       8       8
  62          QI       7       7       7       7       7       6       6       6       6       6
  63          QI       6       6       5       5       5       5       5       5       5       5
  64          QI       5       5       5       4       4       4       4       4       4       4
  65          QI       4       4       4       4       4       4       4       4       3       3
  66          QI       3       3       3       3       3       3       3       3       3       3
  67          QI       3       3       3       3       3       3       3       3       3       3
  68          QI       3       3       3       3       3       2       2       2       2       2
  69          QI       2       2       2       2       2       2       2       2       2       2
  70          QI       2       2       2       2       2       2       2       2       2       2
  71          QI       2       2       2       2       2       2       2       2       2       2
  72          QI       2       2       2       2       1       1       1       1       1       0
  73          QI       0       0       0       0       0       0       0       0       0       0

  74          KK     PSC
  75          KM       OUTFLOW HYDROGRAPH FROM SOUTHERN AVE PUMP STATION - OCT 86 BOYLE REPORT
  76          IN       5       1       0
  77          QI       0       0       0       0       0       0       0       0       0       0
  78          QI       0       0       0       0       0       0       0       0       0       0
  79          QI       0       0       0       0       0       0       0       0       0       0
  80          QI       0       0       0       0       0       0       0       0       0       0
  81          QI       0       0       0       0       0       0       0       0       0       0
  82          QI       0       0       0       0       0       0       0       0       0       0
  83          QI       0       0       0       0       0       0       0       0       0       0
  84          QI       0       0       0       0       0       0       0       0       0       0
  85          QI       0       0       0       0       0       0       0       0       0       0
  86          QI       0       0       0       0       0       0       0       0       0       0
  87          QI       0       0       0       0       0       0       0       0       0       0
  88          QI       0       0       0       0       0       0       0       0       0       0
  89          QI       0       0       0       0       0       0       0       0       0       0
  90          QI       0       0       0       0       0       0       0       0       0       2
  91          QI       6      13      22      40      40      40      40      40      40      40
  92          QI      40      40      40      40      40      40      40      40      40      40
  93          QI       0       0       0       0       0       0       0       0       0       0
  94          QI       0       0       0       0       0       0       0       0       0       0

  95          KK    RPSC
  96          KM       ROUTE PUMP STATION FLOW TO DROP SHAFT 4
  97          RK     600   .0013    .018            CIRC     3.5

  98          KK     DS4
  99          KM       COMBINE HYDROGRAPHS AT GENEVA (DROP SHAFT 4 INFLOW)
 100          HC       2
```

```
LINE          ID.......1.......2.......3.......4.......5.......6.......7.......8.......9......10

 101          KK      O
 102          KM       BOYLE STATION 16 HYDROGRAPH AT CONCORDA (DROP SHAFT 3 INFLOW)
 103          IN      5       1       0
 104          QI      0       0       0       0       0       0       0       0       0       0
 105          QI      0       0       0       0       0       0       0       0       0       0
 106          QI      0       0       0       0       0       0       0       0       0       0
 107          QI      0       0       0       0       0       0       0       0       0       0
 108          QI      0       0       0       0       0       0       0       0       0       0
 109          QI      0       0       0       0       0       0       0       0       0       0
 110          QI      0       0       0       0       0       0       0       0       0       0
 111          QI      0       0       0       0       0       0       0       0       0       0
 112          QI      0       0       0       0       0       0       0       0       0       0
 113          QI      0       0       0       0       0       0       0       0       0       0
 114          QI      0       0       0       0       0       0       0       0       0       0
 115          QI      0       0       0       0       0       0       0       0       0       0
 116          QI      0       0       0       0       0       0       0       0       0       0
 117          QI      0       0       0       0       0       0       0       1       1       1
 118          QI      1       2       3       5       8      14      23      36      52      70
 119          QI     85      93      98      98      94      86      76      66      56      48
 120          QI     41      35      30      26      22      20      17      15      14      12
 121          QI     11      10       9       9       8       7       7       7       6       6
 122          QI      6       5       5       5       5       4       4       4       4       4
 123          QI      4       4       4       3       3       3       3       3       3       3
 124          QI      3       3       3       3       3       3       3       2       2       2
 125          QI      2       2       2       2       2       2       2       2       2       2
 126          QI      2       2       2       2       2       2       2       2       2       2
 127          QI      2       2       2       2       2       2       2       1       1       1
 128          QI      1       1       1       1       1       1       1       1       1       1
 129          QI      1       1       1       1       1       1       1       1       1       1
 130          QI      1       1       1       1       1       1       1       1       1       1
 131          QI      1       1       1       1       1       1       1       1       1       1
 132          QI      1       1       1       1       1       1       1       1       1       1
 133          QI      1       1       1       1       0       0       0       0       0       0
 134          QI      0       0       0       0       0       0       0       0       0       0

 135          KK      P
 136          KM       BOYLE STATION 23 HYDROGRAPH AT BROADWAY
 137          IN      5       1       0
 138          QI      0       0       0       0       0       0       0       0       0       0
 139          QI      0       0       0       0       0       0       0       0       0       0
 140          QI      0       0       0       0       0       0       0       0       0       0
 141          QI      0       0       0       0       0       0       0       0       0       0
 142          QI      0       0       0       0       0       0       0       0       0       0
 143          QI      0       0       0       0       0       0       0       0       0       0
 144          QI      0       0       0       0       0       0       0       0       0       0
 145          QI      0       0       0       0       0       0       0       0       0       0
 146          QI      0       0       0       0       0       0       0       0       0       0
 147          QI      0       0       0       0       0       0       0       0       0       0
 148          QI      0       0       0       0       0       0       0       0       0       0
 149          QI      0       0       0       0       0       0       0       0       0       0
 150          QI      0       0       0       0       0       0       0       0       0       0
 151          QI      0       0       0       0       0       0       0       0       0       0
 152          QI      0       1       1       2       4       7      15      24      32      38
 153          QI     41      42      42      43      42      41      38      35      32      28
```

```
LINE          ID.......1.......2.......3.......4.......5.......6.......7.......8.......9.......10

  154         QI      24      20      18      15      14      12      11      10       9       8
  155         QI       7       6       6       5       5       5       4       4       4       4
  156         QI       3       3       3       3       3       3       2       2       2       2
  157         QI       2       2       2       2       2       2       2       2       2       2
  158         QI       2       2       1       1       1       1       1       1       1       1
  159         QI       1       1       1       1       1       1       1       1       1       1
  160         QI       1       1       1       1       1       1       1       1       1       1
  161         QI       1       1       1       1       1       1       1       1       1       1
  162         QI       1       1       1       1       1       1       1       1       1       1
  163         QI       1       1       1       1       1       1       0       0       0       0
  164         QI       0       0       0       0       0       0       0       0       0       0
  165         QI       0       0       0       0       0       0       0       0       0       0
  166         QI       0       0       0       0       0       0       0       0       0       0
  167         QI       0       0       0       0       0       0       0       0       0       0
  168         QI       0       0       0       0       0       0       0       0       0       0

  169         KK     PSB
  170         KM       OUTFLOW HYDROGRAPH FROM BROADWAY PUMP STATION - OCT 86 BOYLE REPORT
  171         IN       5       1       0
  172         QI       0       0       0       0       0       0       0       0       0       0
  173         QI       0       0       0       0       0       0       0       0       0       0
  174         QI       0       0       0       0       0       0       0       0       0       0
  175         QI       0       0       0       0       0       0       0       0       0       0
  176         QI       0       0       0       0       0       0       0       0       0       0
  177         QI       0       0       0       0       0       0       0       0       0       0
  178         QI       0       0       0       0       0       0       0       0       0       0
  179         QI       0       0       0       0       0       0       0       0       0       0
  180         QI       0       0       0       0       0       0       0       0       0       0
  181         QI       0       0       0       0       0       0       0       0       0       0
  182         QI       0       0       0       0       0       0       0       0       0       0
  183         QI       0       0       0       0       0       0       0       0       0       0
  184         QI       0       0       0       0       0       0       0       0       0       0
  185         QI       0       0       0       0       0       0       0       0       0       3
  186         QI       9      18      29      40      40      40      40      40      40      40
  187         QI      40      40      40      40      40      40      40      40      40      40
  188         QI      40      40      40      40      40      40      40      40      40      40
  189         QI       0       0       0       0       0       0       0       0       0       0
  190         QI       0       0       0       0       0       0       0       0       0       0

  191         KK     DS2
  192         KM       COMBINE HYDROGRAPHS AT BROADWAY (DROP SHAFT 2 INFLOW)
  193         HC       2

  194         KK       Q
  195         KM       BOYLE STATION 31 HYDROGRAPH AT MARYLAND
  196         IN       5       1       0
  197         QI       0       0       0       0       0       0       0       0       0       0
  198         QI       0       0       0       0       0       0       0       0       0       0
  199         QI       0       0       0       0       0       0       0       0       0       0
  200         QI       0       0       0       0       0       0       0       0       0       0
  201         QI       0       0       0       0       0       0       0       0       0       0
  202         QI       0       0       0       0       0       0       0       0       0       0
  203         QI       0       0       0       0       0       0       0       0       0       0
  204         QI       0       0       0       0       0       0       0       0       0       0
  205         QI       0       0       0       0       0       0       0       0       0       0
```

```
LINE          ID.......1.......2.......3.......4.......5.......6.......7.......8.......9......10

 206          QI       0       0       0       0       0       0       0       0       0       0
 207          QI       0       0       0       0       0       0       0       0       0       0
 208          QI       0       0       0       0       0       0       0       0       0       0
 209          QI       0       0       0       0       0       0       0       0       0       0
 210          QI       0       0       0       0       0       0       0       0       0       0
 211          QI       1       1       2       4       6      12      22      38      56      78
 212          QI     102     123     137     146     148     145     137     126     113      99
 213          QI      86      75      66      57      50      44      39      35      31      28
 214          QI      25      23      21      19      18      16      15      14      13      13
 215          QI      12      11      11      10      10       9       9       8       8       8
 216          QI       7       7       7       7       7       6       6       6       6       6
 217          QI       6       6       5       5       5       5       5       5       5       5
 218          QI       5       5       5       4       4       4       4       4       4       4
 219          QI       4       4       4       4       4       4       4       4       3       3
 220          QI       3       3       3       3       3       3       3       3       3       3
 221          QI       3       3       3       3       3       3       3       3       3       3
 222          QI       3       3       3       3       3       3       2       2       2       2
 223          QI       2       2       2       2       2       2       2       2       2       2
 224          QI       2       2       2       2       2       2       2       2       2       2
 225          QI       2       2       2       2       2       2       2       2       2       2
 226          QI       2       2       2       2       1       1       1       1       1       1
 227          QI       0       0       0       0       0       0       0       0       0       0

 228          KK     PSA
 229          KM        OUTFLOW HYDROGRAPH FROM UNIVERSITY PUMP STATION - OCT 86 BOYLE REPORT
 230          IN       5       1       0
 231          QI       0       0       0       0       0       0       0       0       0       0
 232          QI       0       0       0       0       0       0       0       0       0       0
 233          QI       0       0       0       0       0       0       0       0       0       0
 234          QI       0       0       0       0       0       0       0       0       0       0
 235          QI       0       0       0       0       0       0       0       0       0       0
 236          QI       0       0       0       0       0       0       0       0       0       0
 237          QI       0       0       0       0       0       0       0       0       0       0
 238          QI       0       0       0       0       0       0       0       0       0       0
 239          QI       0       0       0       0       0       0       0       0       0       0
 240          QI       0       0       0       0       0       0       0       0       0       0
 241          QI       0       0       0       0       0       0       0       0       0       0
 242          QI       0       0       0       0       0       0       0       0       0       0
 243          QI       0       0       0       0       0       0       0       0       0       0
 244          QI       0       0       0       0       0       0       0       0       0       3
 245          QI      10      19      32      40      40      40      40      40      40      40
 246          QI      40      40      40      40      40      40      40      40      40      40
 247          QI      40      40      40      40      40      40      40      40      40      40
 248          QI      40      40       0       0       0       0       0       0       0       0
 249          QI       0       0       0       0       0       0       0       0       0       0
 250          QI       0       0       0       0       0       0       0       0       0       0

 251          KK     RPSA
 252          KM        ROUTE PUMP STATION FLOW TO DROP SHAFT 1
 253          RK     500   .0013    .018            CIRC     3.5
```

```
LINE          ID.......1.......2.......3.......4.......5.......6.......7.......8.......9.......10

 254          KK     DS1
 255          KM        COMBINE HYDROGRAPHS AT MARYLAND (DROP SHAFT 1 INFLOW)
 256          HC       2

 257          KK  TUNRES
 258          KM        INFLOW TO TUNNEL FROM TAMS AREA
 259          HC       5

 260          KK  TUNROU
 261          KM        ROUTE TAMS INFLOW THROUGH TUNNEL STORAGE
 262          RS       1    STOR       0       0
 263          SV       0    41.6    83.2    83.3    83.4    83.5
 264          SE       0      19      38      50      65      80
 265          SQ       0       0       0       0       0     300
 266          SE       0      19      28      58      80      85
 267          ZZ
```

RUNOFF SUMMARY
FLOW IN CUBIC FEET PER SECOND
TIME IN HOURS, AREA IN SQUARE MILES

OPERATION	STATION	PEAK FLOW	TIME OF PEAK	AVERAGE FLOW FOR MAXIMUM PERIOD 6-HOUR	24-HOUR	72-HOUR	BASIN AREA	MAXIMUM STAGE	TIME OF MAX STAGE
HYDROGRAPH AT	M	129.	12.75	29.	8.	3.	0.00		
HYDROGRAPH AT	N	170.	12.75	37.	10.	3.	0.00		
HYDROGRAPH AT	PSC	40.	12.00	11.	3.	1.	0.00		
ROUTED TO	RPSC	40.	12.25	11.	3.	1.	0.00		
2 COMBINED AT	DS4	210.	12.75	47.	13.	4.	0.00		
HYDROGRAPH AT	O	98.	12.75	20.	5.	2.	0.00		
HYDROGRAPH AT	P	43.	12.75	11.	3.	1.	0.00		
HYDROGRAPH AT	PSB	40.	12.00	16.	4.	1.	0.00		
2 COMBINED AT	DS2	83.	12.75	26.	7.	2.	0.00		
HYDROGRAPH AT	Q	146.	12.75	34.	9.	3.	0.00		
HYDROGRAPH AT	PSA	40.	12.00	17.	4.	1.	0.00		
ROUTED TO	RPSA	40.	12.25	17.	4.	1.	0.00		
2 COMBINED AT	DS1	186.	12.75	51.	14.	5.	0.00		
5 COMBINED AT	TUNRES	706.	12.75	173.	46.	15.	0.00		
ROUTED TO	TUNROU	40.	16.25	13.	4.	1.	0.00	80.67	16.25

*** NORMAL END OF HEC-1 ***

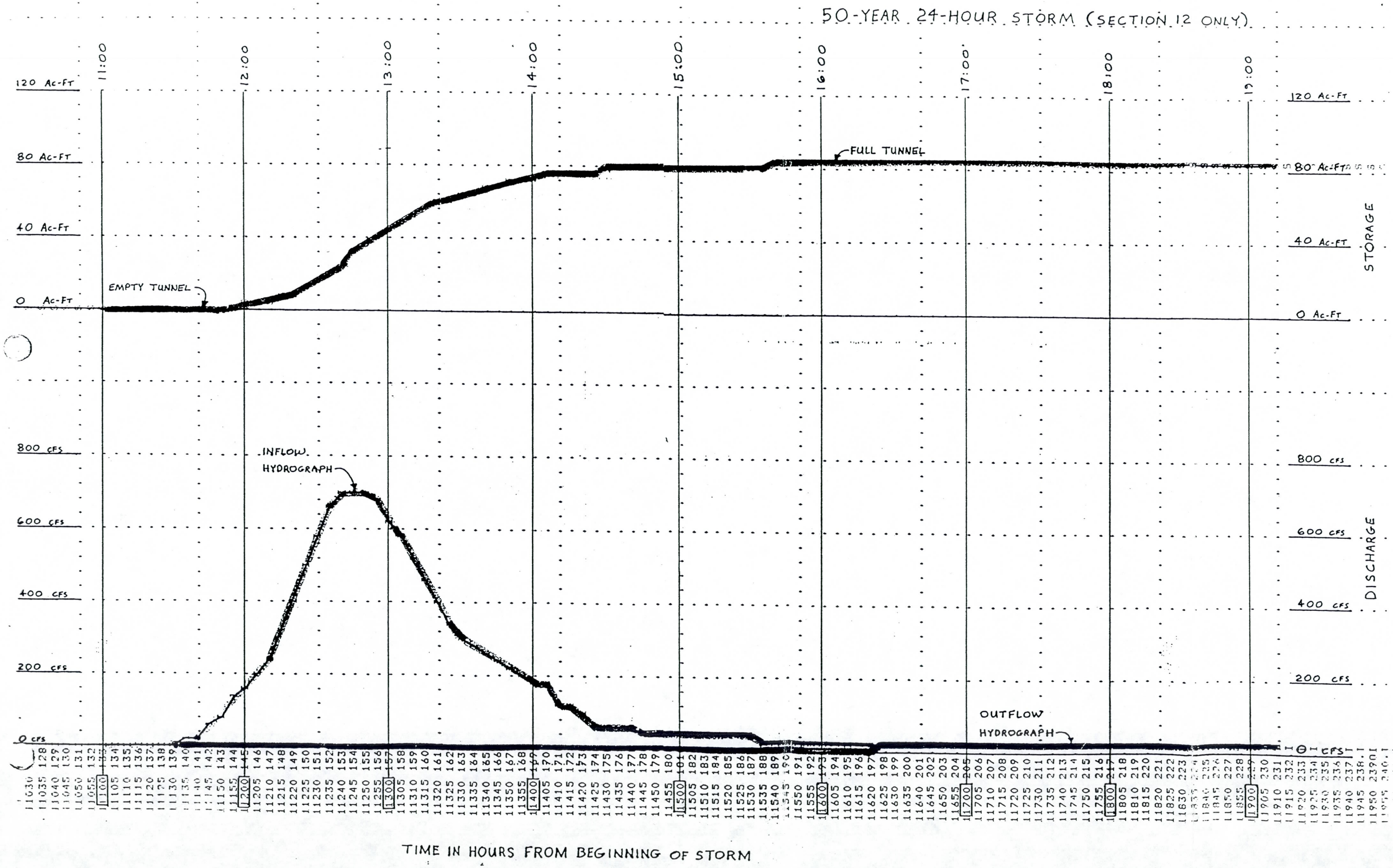
50-YEAR 24-HOUR STORM (SECTION 12 ONLY)
11:00
12:00
13:00
14:00
15:00
16:00
17:00
18:00
19:00
120 AC-FT
80 AC-FT
40 AC-FT
0 AC-FT
STORAGE
FULL TUNNEL
EMPTY TUNNEL
800 CFS
600 CFS
400 CFS
200 CFS
0 CFS
DISCHARGE
INFLOW HYDROGRAPH
OUTFLOW HYDROGRAPH
TIME IN HOURS FROM BEGINNING OF STORM

INTERIM CONDITIONS HEC-1 MODEL
100-YEAR EVENT

```
*****************************************
*                                       *
*   FLOOD HYDROGRAPH PACKAGE  (HEC-1)   *
*             FEBRUARY 1981             *
*           REVISED 31 JAN 85           *
*                                       *
*  RUN DATE      27-J    TIME      16:1 *
*                                       *
*****************************************
```

```
*****************************************
*                                       *
*    U.S. ARMY CORPS OF ENGINEERS       *
*  THE HYDROLOGIC ENGINEERING CENTER    *
*          609 SECOND STREET            *
*       DAVIS, CALIFORNIA 95616         *
*  (916) 440-3285 OR (FTS) 448-3285     *
*                                       *
*****************************************
```

```
X     X  XXXXXXX   XXXXX          X
X     X  X        X     X        XX
X     X  X        X              X
XXXXXXX  XXXX     X       XXXXX  X
X     X  X        X              X
X     X  X        X     X        X
X     X  XXXXXXX   XXXXX         XXX
```

THIS PROGRAM REPLACES ALL PREVIOUS VERSIONS OF HEC-1 KNOWN AS HEC1 (JAN 73), HEC1GS, HEC1DB, AND HEC1KW.

THE DEFINITIONS OF VARIABLES -RTIMP- AND -RTIOR- HAVE CHANGED FROM THOSE USED WITH THE 1973-STYLE INPUT STRUCTURE. THE DEFINITION OF -AMSKK- ON RM-CARD WAS CHANGED WITH REVISIONS DATED 28 SEP 81. THE VERSION RELEASED 31JAN85 CONTAINS NEW OPTIONS ON RL AND BA RECORDS, AND ADDS THE HL RECORD. SEE JANUARY 1985 INPUT DESCRIPTION FOR NEW DEFINITIONS.

```
LINE          ID.......1.......2.......3.......4.......5.......6.......7.......8.......9.......10

  1           ID       OUTER LOOP - ALTERNATIVES ANALYSIS HYDRAULIC MODEL
  2           ID       DEEP CONDUIT OUTFALL (SIPHON TUNNEL) ALTERNATIVE
  3           ID       100-YR 24-HR SCS METHOD HYDROLOGY
  4           IT      15       1       0     300
  5           IO       5             200

  6           KK       M
  7           KM       BOYLE STATION 4 HYDROGRAPH AT MANHATTON
  8           IN       5       1       0
  9           QI       0       0       0       0       0       0       0       0       0       0
 10           QI       0       0       0       0       0       0       0       0       0       0
 11           QI       0       0       0       0       0       0       0       0       0       0
 12           QI       0       0       0       0       0       0       0       0       0       0
 13           QI       0       0       0       0       0       0       0       0       0       0
 14           QI       0       0       0       0       0       0       0       0       0       0
 15           QI       0       0       0       0       0       0       0       0       0       0
 16           QI       0       0       0       0       0       0       0       0       0       0
 17           QI       0       0       0       0       0       0       0       0       0       0
 18           QI       0       0       0       0       0       0       0       0       0       0
 19           QI       0       0       0       0       0       0       0       0       0       0
 20           QI       0       0       0       0       0       0       0       0       0       0
 21           QI       0       0       0       0       0       0       0       0       0       0
 22           QI       1       1       1       1       1       2       2       2       2       3
 23           QI       3       4       6       9      13      22      35      52      74      98
 24           QI     122     141     153     159     157     150     138     124     110      96
 25           QI      84      73      63      55      48      43      38      33      30      27
 26           QI      24      22      20      18      17      15      14      13      12      12
 27           QI      11      10      10       9       9       8       8       8       7       7
 28           QI       7       7       6       6       6       6       6       6       5       5
 29           QI       5       5       5       5       5       5       5       5       4       4
 30           QI       4       4       4       4       4       4       4       4       4       4
 31           QI       4       4       4       3       3       3       3       3       3       3
 32           QI       3       3       3       3       3       3       3       3       3       3
 33           QI       3       3       3       3       3       3       2       2       2       2
 34           QI       2       2       2       2       2       2       2       2       2       2
 35           QI       2       2       2       2       2       2       2       2       2       2
 36           QI       2       2       2       2       2       2       2       2       2       2
 37           QI       2       2       2       2       2       2       2       2       2       2
 38           QI       2       2       1       1       1       1       1       1       1       0
 39           QI       0       0       0       0       0       0       0       0       0       0

 40           KK       N
 41           KM       BOYLE STATION 13 HYDROGRAPH AT GENEVA
 42           IN       5       1       0
 43           QI       0       0       0       0       0       0       0       0       0       0
 44           QI       0       0       0       0       0       0       0       0       0       0
 45           QI       0       0       0       0       0       0       0       0       0       0
 46           QI       0       0       0       0       0       0       0       0       0       0
 47           QI       0       0       0       0       0       0       0       0       0       0
 48           QI       0       0       0       0       0       0       0       0       0       0
 49           QI       0       0       0       0       0       0       0       0       0       0
 50           QI       0       0       0       0       0       0       0       0       0       0
 51           QI       0       0       0       0       0       0       0       0       0       0
 52           QI       0       0       0       0       0       0       0       0       0       0
 53           QI       0       0       0       0       0       0       0       0       0       0
```

```
LINE          ID.......1.......2.......3.......4.......5.......6.......7.......8.......9......10

  54          QI       0       0       0       0       0       0       0       0       0       0
  55          QI       0       0       0       0       0       0       0       1       1       1
  56          QI       1       1       1       2       2       2       3       3       3       4
  57          QI       5       6       8      12      18      29      46      70     103     140
  58          QI     177     200     210     211     203     189     172     153     131     113
  59          QI      97      84      73      64      56      49      43      39      35      31
  60          QI      28      25      23      21      20      18      17      16      15      14
  61          QI      13      13      12      11      11      10      10       9       9       9
  62          QI       9       8       8       8       8       7       7       7       7       7
  63          QI       7       7       6       6       6       6       6       6       6       6
  64          QI       6       5       5       5       5       5       5       5       5       5
  65          QI       5       5       5       4       4       4       4       4       4       4
  66          QI       4       4       4       4       4       4       4       4       4       4
  67          QI       3       3       3       3       3       3       3       3       3       3
  68          QI       3       3       3       3       3       3       3       3       3       3
  69          QI       3       3       3       3       3       3       3       3       3       3
  70          QI       3       3       3       2       2       2       2       2       2       2
  71          QI       2       2       2       2       2       2       2       2       2       2
  72          QI       2       2       2       2       2       1       1       1       1       1
  73          QI       0       0       0       0       0       0       0       0       0       0

  74          KK     PSC
  75          KM       OUTFLOW HYDROGRAPH FROM SOUTHERN AVE PUMP STATION - OCT 86 BOYLE REPORT
  76          IN       5       1       0
  77          QI       0       0       0       0       0       0       0       0       0       0
  78          QI       0       0       0       0       0       0       0       0       0       0
  79          QI       0       0       0       0       0       0       0       0       0       0
  80          QI       0       0       0       0       0       0       0       0       0       0
  81          QI       0       0       0       0       0       0       0       0       0       0
  82          QI       0       0       0       0       0       0       0       0       0       0
  83          QI       0       0       0       0       0       0       0       0       0       0
  84          QI       0       0       0       0       0       0       0       0       0       0
  85          QI       0       0       0       0       0       0       0       0       0       0
  86          QI       0       0       0       0       0       0       0       0       0       0
  87          QI       0       0       0       0       0       0       0       0       0       0
  88          QI       0       0       0       0       0       0       0       0       0       0
  89          QI       0       0       0       0       0       0       0       0       0       0
  90          QI       0       0       0       0       0       0       0       0       0       2
  91          QI       6      13      22      40      40      40      40      40      40      40
  92          QI      40      40      40      40      40      40      40      40      40      40
  93          QI       0       0       0       0       0       0       0       0       0       0

  94          KK     RPSC
  95          KM       ROUTE PUMP STATION FLOW TO DROP SHAFT 4
  96          RK     600   .0013    .018            CIRC     3.5

  97          KK     DS4
  98          KM       COMBINE HYDROGRAPHS AT GENEVA (DROP SHAFT 4 INFLOW)
  99          HC       2
```

```
LINE          ID.......1.......2.......3.......4.......5.......6.......7.......8.......9.......10

  100         KK      0
  101         KM       BOYLE STATION 16 HYDROGRAPH AT CONCORDA (DROP SHAFT 3 INFLOW)
  102         IN      5       1       0
  103         QI      0       0       0       0       0       0       0       0       0       0
  104         QI      0       0       0       0       0       0       0       0       0       0
  105         QI      0       0       0       0       0       0       0       0       0       0
  106         QI      0       0       0       0       0       0       0       0       0       0
  107         QI      0       0       0       0       0       0       0       0       0       0
  108         QI      0       0       0       0       0       0       0       0       0       0
  109         QI      0       0       0       0       0       0       0       0       0       0
  110         QI      0       0       0       0       0       0       0       0       0       0
  111         QI      0       0       0       0       0       0       0       0       0       0
  112         QI      0       0       0       0       0       0       0       0       0       0
  113         QI      0       0       0       0       0       0       0       0       0       0
  114         QI      0       0       0       0       0       0       0       0       0       0
  115         QI      0       0       0       0       0       0       0       0       0       0
  116         QI      0       0       0       1       1       1       1       1       2       2
  117         QI      2       3       5       7      11      18      30      46      67      88
  118         QI    104     115     121     120     115     105      93      80      68      58
  119         QI     50      42      36      31      27      24      21      18      17      15
  120         QI     13      12      11      10      10       9       8       8       7       7
  121         QI      6       6       6       6       5       5       5       5       5       5
  122         QI      4       4       4       4       4       4       4       4       4       4
  123         QI      3       3       3       3       3       3       3       3       3       3
  124         QI      3       3       3       3       3       3       3       3       2       2
  125         QI      2       2       2       2       2       2       2       2       2       2
  126         QI      2       2       2       2       2       2       2       2       2       2
  127         QI      2       2       2       2       2       2       2       2       2       2
  128         QI      2       2       1       1       1       1       1       1       1       1
  129         QI      1       1       1       1       1       1       1       1       1       1
  130         QI      1       1       1       1       1       1       1       1       1       1
  131         QI      1       1       1       1       1       1       1       1       1       1
  132         QI      1       1       1       1       1       1       0       0       0       0
  133         QI      0       0       0       0       0       0       0       0       0       0

  134         KK      P
  135         KM       BOYLE STATION 23 HYDROGRAPH AT BROADWAY
  136         IN      5       1       0
  137         QI      0       0       0       0       0       0       0       0       0       0
  138         QI      0       0       0       0       0       0       0       0       0       0
  139         QI      0       0       0       0       0       0       0       0       0       0
  140         QI      0       0       0       0       0       0       0       0       0       0
  141         QI      0       0       0       0       0       0       0       0       0       0
  142         QI      0       0       0       0       0       0       0       0       0       0
  143         QI      0       0       0       0       0       0       0       0       0       0
  144         QI      0       0       0       0       0       0       0       0       0       0
  145         QI      0       0       0       0       0       0       0       0       0       0
  146         QI      0       0       0       0       0       0       0       0       0       0
  147         QI      0       0       0       0       0       0       0       0       0       0
  148         QI      0       0       0       0       0       0       0       0       0       0
  149         QI      0       0       0       0       0       0       0       0       0       0
  150         QI      0       0       0       0       0       0       0       0       0       0
  151         QI      0       1       2       3       5      10      20      32      42      48
  152         QI     51      51      54      54      53      51      48      44      40      35
```

```
LINE          ID.......1.......2.......3.......4.......5.......6.......7.......8.......9......10

 153          QI      30      26      22      19      17      15      13      12      11       9
 154          QI       9       8       7       7       6       6       5       5       5       4
 155          QI       4       4       4       3       3       3       3       3       3       3
 156          QI       3       2       2       2       2       2       2       2       2       2
 157          QI       2       2       2       2       2       2       2       2       2       2
 158          QI       2       2       1       1       1       1       1       1       1       1
 159          QI       1       1       1       1       1       1       1       1       1       1
 160          QI       1       1       1       1       1       1       1       1       1       1
 161          QI       1       1       1       1       1       1       1       1       1       1
 162          QI       1       1       1       1       1       1       1       1       1       1
 163          QI       1       1       1       1       1       1       1       1       1       1
 164          QI       1       1       1       1       1       1       1       0       0       0
 165          QI       0       0       0       0       0       0       0       0       0       0
 166          QI       0       0       0       0       0       0       0       0       0       0
 167          QI       0       0       0       0       0       0       0       0       0       0

 168          KK     PSB
 169          KM       OUTFLOW HYDROGRAPH FROM BROADWAY PUMP STATION - OCT 86 BOYLE REPORT
 170          IN       5       1       0
 171          QI       0       0       0       0       0       0       0       0       0       0
 172          QI       0       0       0       0       0       0       0       0       0       0
 173          QI       0       0       0       0       0       0       0       0       0       0
 174          QI       0       0       0       0       0       0       0       0       0       0
 175          QI       0       0       0       0       0       0       0       0       0       0
 176          QI       0       0       0       0       0       0       0       0       0       0
 177          QI       0       0       0       0       0       0       0       0       0       0
 178          QI       0       0       0       0       0       0       0       0       0       0
 179          QI       0       0       0       0       0       0       0       0       0       0
 180          QI       0       0       0       0       0       0       0       0       0       0
 181          QI       0       0       0       0       0       0       0       0       0       0
 182          QI       0       0       0       0       0       0       0       0       0       0
 183          QI       0       0       0       0       0       0       0       0       0       0
 184          QI       0       0       0       0       0       0       0       0       0       3
 185          QI       9      18      29      40      40      40      40      40      40      40
 186          QI      40      40      40      40      40      40      40      40      40      40
 187          QI      40      40      40      40      40      40      40      40      40      40
 188          QI       0       0       0       0       0       0       0       0       0       0

 189          KK     DS2
 190          KM       COMBINE HYDROGRAPHS AT BROADWAY (DROP SHAFT 2 INFLOW)
 191          HC       2

 192          KK       Q
 193          KM       BOYLE STATION 31 HYDROGRAPH AT MARYLAND
 194          IN       5       1       0
 195          QI       0       0       0       0       0       0       0       0       0       0
 196          QI       0       0       0       0       0       0       0       0       0       0
 197          QI       0       0       0       0       0       0       0       0       0       0
 198          QI       0       0       0       0       0       0       0       0       0       0
 199          QI       0       0       0       0       0       0       0       0       0       0
 200          QI       0       0       0       0       0       0       0       0       0       0
 201          QI       0       0       0       0       0       0       0       0       0       0
 202          QI       0       0       0       0       0       0       0       0       0       0
 203          QI       0       0       0       0       0       0       0       0       0       0
 204          QI       0       0       0       0       0       0       0       0       0       0
```

```
LINE          ID.......1.......2.......3.......4.......5.......6.......7.......8.......9......10

 205          QI       0       0       0       0       0       0       0       0       0       0
 206          QI       0       0       0       0       0       0       0       0       0       0
 207          QI       0       0       0       0       0       0       0       0       0       0
 208          QI       0       0       0       0       0       0       1       1       1       2
 209          QI       2       3       4       6      10      18      31      49      73     101
 210          QI     130     155     173     182     184     180     170     155     138     121
 211          QI     105      92      80      70      61      54      48      43      38      34
 212          QI      31      28      25      23      21      20      18      17      16      15
 213          QI      14      13      13      12      11      11      10      10       9       9
 214          QI       9       8       8       8       8       8       7       7       7       7
 215          QI       7       7       7       6       6       6       6       6       6       6
 216          QI       6       6       5       5       5       5       5       5       5       5
 217          QI       5       5       5       5       4       4       4       4       4       4
 218          QI       4       4       4       4       4       4       4       4       4       4
 219          QI       4       3       3       3       3       3       3       3       3       3
 220          QI       3       3       3       3       3       3       3       3       3       3
 221          QI       3       3       3       3       3       3       3       3       3       3
 222          QI       3       3       3       3       3       2       2       2       2       2
 223          QI       2       2       2       2       2       2       2       2       2       2
 224          QI       2       2       2       2       2       2       1       1       1       1
 225          QI       0       0       0       0       0       0       0       0       0       0

 226          KK     PSA
 227          KM       OUTFLOW HYDROGRAPH FROM UNIVERSITY PUMP STATION - OCT 86 BOYLE REPORT
 228          IN       5       1       0
 229          QI       0       0       0       0       0       0       0       0       0       0
 230          QI       0       0       0       0       0       0       0       0       0       0
 231          QI       0       0       0       0       0       0       0       0       0       0
 232          QI       0       0       0       0       0       0       0       0       0       0
 233          QI       0       0       0       0       0       0       0       0       0       0
 234          QI       0       0       0       0       0       0       0       0       0       0
 235          QI       0       0       0       0       0       0       0       0       0       0
 236          QI       0       0       0       0       0       0       0       0       0       0
 237          QI       0       0       0       0       0       0       0       0       0       0
 238          QI       0       0       0       0       0       0       0       0       0       0
 239          QI       0       0       0       0       0       0       0       0       0       0
 240          QI       0       0       0       0       0       0       0       0       0       0
 241          QI       0       0       0       0       0       0       0       0       0       0
 242          QI       0       0       0       0       0       0       0       0       0       3
 243          QI      10      19      32      40      40      40      40      40      40      40
 244          QI      40      40      40      40      40      40      40      40      40      40
 245          QI      40      40      40      40      40      40      40      40      40      40
 246          QI      40      40       0       0       0       0       0       0       0       0
 247          QI       0       0       0       0       0       0       0       0       0       0

 248          KK    RPSA
 249          KM       ROUTE PUMP STATION FLOW TO DROP SHAFT 1
 250          RK     500   .0013    .018           CIRC     3.5

 251          KK     DS1
 252          KM       COMBINE HYDROGRAPHS AT MARYLAND (DROP SHAFT 1 INFLOW)
 253          HC       2
```

```
LINE          ID.......1.......2.......3.......4.......5.......6.......7.......8.......9......10

 254          KK  TUNRES
 255          KM        INFLOW TO TUNNEL FROM TAMS AREA
 256          HC       5

 257          KK  TUNROU
 258          KM        ROUTE TAMS INFLOW THROUGH TUNNEL STORAGE
 259          RS       1    STOR       0       0
 260          SV       0    41.6    83.2    83.3    83.4    83.5
 261          SE       0      19      38      50      65      80
 262          SQ       0       0       0       0     500
 263          SE       0      19      28      38      80
 264          ZZ
```

RUNOFF SUMMARY
FLOW IN CUBIC FEET PER SECOND
TIME IN HOURS, AREA IN SQUARE MILES

OPERATION	STATION	PEAK FLOW	TIME OF PEAK	AVERAGE FLOW FOR MAXIMUM PERIOD 6-HOUR	24-HOUR	72-HOUR	BASIN AREA	MAXIMUM STAGE	TIME OF MAX STAGE
HYDROGRAPH AT	M	159.	12.75	35.	10.	3.	0.00		
HYDROGRAPH AT	N	211.	12.75	45.	12.	4.	0.00		
HYDROGRAPH AT	PSC	40.	12.00	11.	3.	1.	0.00		
ROUTED TO	RPSC	40.	12.25	11.	3.	1.	0.00		
2 COMBINED AT	DS4	251.	12.75	55.	15.	5.	0.00		
HYDROGRAPH AT	O	120.	12.75	25.	7.	2.	0.00		
HYDROGRAPH AT	P	54.	12.75	13.	4.	1.	0.00		
HYDROGRAPH AT	PSB	40.	12.00	16.	4.	1.	0.00		
2 COMBINED AT	DS2	94.	12.75	29.	8.	3.	0.00		
HYDROGRAPH AT	Q	182.	12.75	42.	11.	4.	0.00		
HYDROGRAPH AT	PSA	40.	12.00	17.	4.	1.	0.00		
ROUTED TO	RPSA	40.	12.25	17.	4.	1.	0.00		
2 COMBINED AT	DS1	222.	12.75	59.	16.	5.	0.00		
5 COMBINED AT	TUNRES	846.	12.75	203.	54.	18.	0.00		
ROUTED TO	TUNROU	289.	14.00	41.	12.	4.	0.00	70.70	14.00

*** NORMAL END OF HEC-1 ***

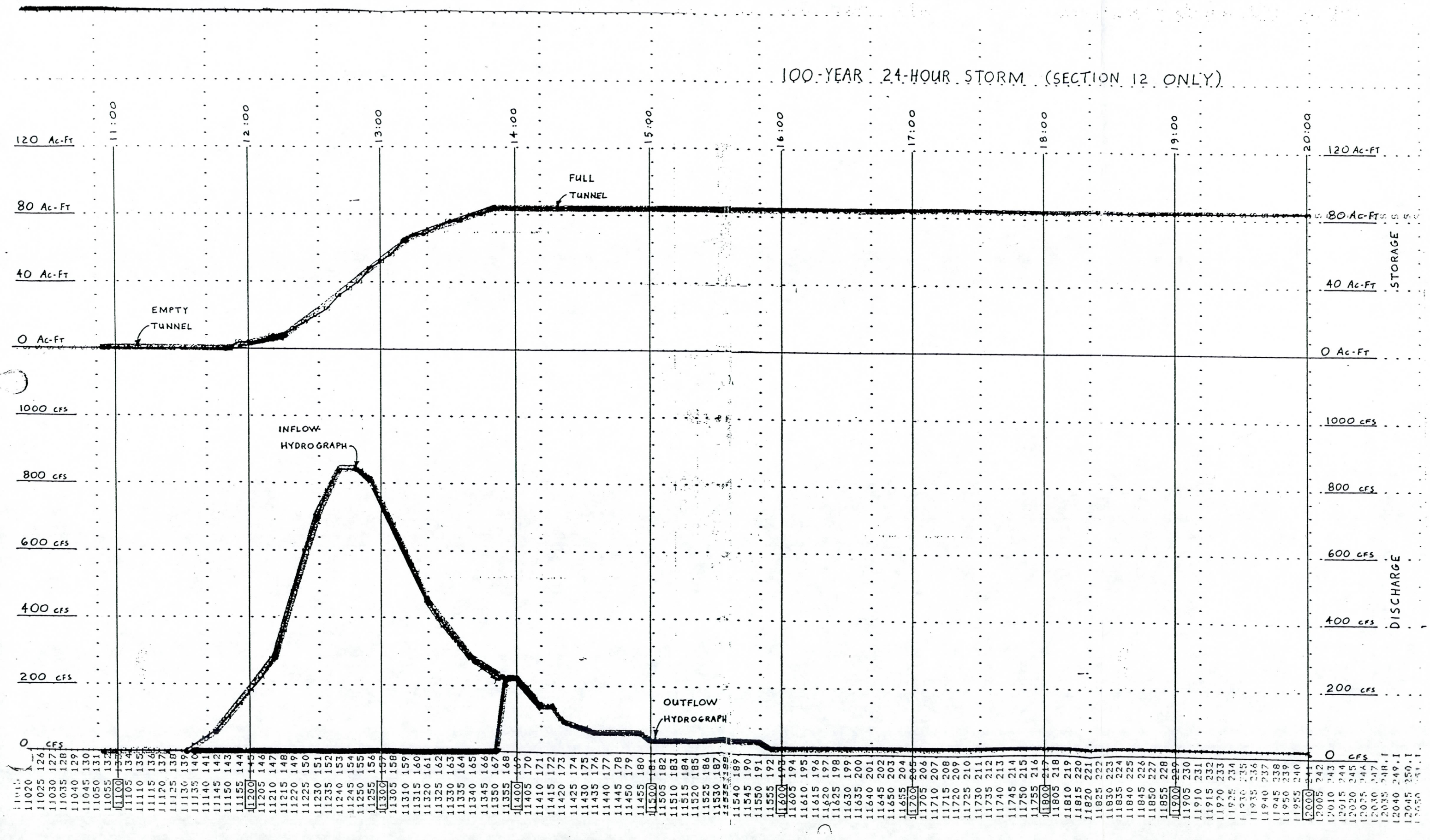
100-YEAR 24-HOUR STORM (SECTION 12 ONLY)
11:00
12:00
13:00
14:00
15:00
16:00
17:00
18:00
19:00
20:00
120 Ac-Ft
80 Ac-Ft
40 Ac-Ft
0 Ac-Ft
STORAGE
FULL TUNNEL
EMPTY TUNNEL
1000 cfs
800 cfs
600 cfs
400 cfs
200 cfs
0 cfs
DISCHARGE
INFLOW HYDROGRAPH
OUTFLOW HYDROGRAPH
TIME IN HOURS FROM BEGINNING OF STORM

APPENDIX D

OUTER LOOP HIGHWAY SR360 INTERCHANGE HYDROLOGY STUDY PART 1 & PART 2 REPORTS

OUTER LOOP HIGHWAY

SR 360 INTERCHANGE

HYDROLOGY STUDY

PART 1 - Area Uncontrolled
by City of Mesa Detention Ponds

HNTB

September 1986

Registered Professional Engineer (Civil)
CERTIFICATE NO. 18410
RICHARD E. SCHWAB
Date Signed 9.12.86
ARIZONA, U.S.A.

EXECUTIVE SUMMARY

This report presents the results of a hydrology study that used an HEC-1 computer model to determine the expected runoff from the "uncontrolled" area north of the Superstition Freeway and east of the proposed Outer Loop Highway, yet downstream of the City of Mesa detention ponds constructed adjacent to the Superstition Freeway.

The expected runoff peaks from the study area directly impacting the SR 360 - Outer Loop Highway Interchange are 780 cfs for the 10-year storm, 1279 cfs for the 50-year storm, and 1562 for the 100-year storm.

Flows from the area directly contributing to Carriage Lane Basin, outflow from the Carriage Lane Basin, outflow from the Dobson Ranch Lake, outflow from the City of Mesa pond system along the Superstition Freeway, and the interactions of the HNTB and Boyle hydrology models will be presented in a future Hydrology Report, "Part 2 - Inflow Hydrographs to Outer Loop Offsite Drainage System".

Table of Contents

A. Hydrology Model

1) Methodology

2) Drainage Area

3) Field Investigation

4) Computer Model Input Data

i. Subarea

ii. Procedures and Assumptions for Determining Subarea Characteristics

iii. Procedures and Assumptions for Hydrograph Routings

B. Results

1) HNTB Model

2) Comparison with Yost & Gardner Study and with Preliminary HNTB Results

TABLES

1 Rainfall Depths Used in HEC-1

2 Subarea Characteristics and HEC-1 Parameters

3 Flow Split Ratios at Subarea Concentration Points

4 Curve Numbers and Impervious Area Percentages by Zoning Categories

5 Major Runoff Storage Volume Within Drainage Area

6 10-Year 24-Hour Storm: Peak Flows and Runoff Volumes

7 50-Year 24-Hour Storm: Peak Flows and Runoff Volumes

8 100-Year 24-Hour Storm: Peak Flows and Runoff Volumes

9 Summary of HEC-1 Model Results for "Uncontrolled" Area

SR 360 Interchange

Hydrology Study

July 18, 1986

A. Hydrology Model

1) Methodology

A hydrology model using the Corps of Engineers computer program HEC-1 was assembled for the area contributing "uncontrolled" runoff to a concentration point at the Mesa Drainage System Channel where it passes under the Superstition Freeway. The computer model was based on Soil Conservation Service (SCS) methodology. The "uncontrolled" runoff is contributed by a drainage area north of the Superstition Freeway and downstream of the major detention basin at Extension Road and the Freeway.

2) Drainage Area

The approximate boundaries of the drainage area were given in the project description as the Superstition Freeway, Extension Road, Broadway Road, Country Club Drive, 8th Street, Alma School Road, Apache and the Tempe Canal, an area of roughly 5.5 square miles. The boundary is shown on Exhibit 1, 2 and 3. Field inspection indicated that runoff could also be contributed by a 0.5 square mile area between Country Club Drive and Extension Road from Southern Avenue to Broadway Road. Around 1.5 square miles of

area, mostly west of Date and north of the Southern Pacific Railroad, contributes little runoff to the concentration point, due to the Southern Pacific Railroad embankment. For about 2.5 miles running east of the Tempe Canal, the railroad embankment is 2 to 4 feet above natural ground, with only a 4' by 3' box culvert carrying flow under the tracks near the University of Arizona Experimental Farm. At the eastern edge of the drainage area, where the embankment is built up about 1 foot, it was assumed the tracks would overtop; therefore the quarter-mile-wide strip between Date and Country Club Drive from the railroad to 8th Street was considered contributing area. Storage below the slight build-up of the tracks was included in the model. Much of the remaining 1.5 square miles north of the tracks contributes to the box culvert near the ASU farm. Runoff from that area goes into storage behind the railroad embankment, mostly within the farm with some flowing south through the culvert, some remaining in storage, and the remainder flowing westward towards the Tempe Canal.

3) Field Investigation

All streets, and all residential, commercial and industrial developments of the 5 3/4 square mile drainage area were driven during the field investigation. All residential lots with sunken or bermed yards were recorded as having flood irrigation on copies of 200-scale aerial photographs. Bermed undeveloped areas were recorded. All residential, commercial or industrial areas with runoff retention or detention measures were recorded. It was noted if the observed runoff control measures were obviously insufficient. Areas currently undergoing construction/development were noted.

4) Computer Model Input Data

i. Subareas

Subsequent to the field investigation, the watershed area was divided into 30 subareas. The subareas are shown on Exhibit 1, 2 and 3. The field observations were transferred to 200-scale City of Mesa sheets showing property lines and street right-of-ways. From these, the amount of area for each subarea was calculated for four categories: flood irrigated areas, areas with significant retention, areas with minor retention, and undeveloped areas. Non-contributing areas were determined assuming that observed minor retention controlled 50-year runoff from 50% of the property, while the other three categories assumed control of all 50-year runoff from the lot or property where observed. Undeveloped areas were considered as non-contributing because many had berms along property lines, and because all development in Mesa since 1972 has been required to provide full retention for 50-year runoff.

Because the City of Mesa retention requirement is the 50-year runoff volume (based upon the City of Mesa rainfall curves and their 50-year 24-hour rainfall depth of 3.0 inches), the assumption was made that the so-called non-contributing areas with retention storage were only non-contributing up to the City of Mesa 50-year 24-hour rainfall depth of 3.0 inches. For storms with 24-hour rainfall depths exceeding 3.0 inches, all available retention volume within the "non-contributing" was assumed used by the first 3 inches of rainfall, with the excess runoff from any additional rainfall depths contributing along with runoff from the "contributing" area. This

excess runoff from the "non-contributing" areas does not affect local runoff peaks because it only occurs after the runoff from the first 3 inches of rainfall goes into storage, so that the excess occurs in the latter stages of the storm. However, the excess runoff does cause a significant increase in total runoff volumes.

ii. Procedures and Assumptions for Determining Subarea Characteristics

For the assembly of the HEC-1 model, the procedures and assumptions used by the Boyle Engineering Corporation hydrology study of the area between Price Road and the Tempe Canal between Superstition Freeway and the Salt River were followed wherever as possible. Because the Boyle and HNTB hydrology results may be inputs to the same hydraulic structure design, usage of consistent methodology is important. Therefore, Soil Conservation Service (SCS) methodology was used, with only one major difference; the HNTB model has somewhat larger average subarea sizes. However, runs made of a portion of the Boyle area with Boyle data, but larger subarea sizes, indicated little or no change in magnitude of runoff peaks.

The HNTB model initially used the City of Mesa Rainfall Intensity-Duration-Frequency Relations curves acquired from the City of Mesa, because the drainage area lies entirely within that city and because a city ordinance has required complete retention of the 50-year 24-hour rainfall runoff depth since the early 1970's. The Boyle model used a 50-year 24-hour rainfall depth of about 3.4 inches; the City of Mesa curves have a 50-year 24-hour rainfall depth of 3.0 inches. To be sufficiently conservative and for compatability of results, the HNTB model was converted to the Boyle

input rainfall data. Table 1 lists the respective rainfall values used by Mesa, and those used in the HNTB and Boyle models.

The procedure used by Boyle for determining SCS Curve Numbers was used, basing Curve Numbers (CN) on a base CN and a percentage of impervious area (estimated) for each subarea. A base CN of 72 was used to represent average pervious areas within the drainage area, based upon Type B soil, two-thirds urban lawn in fair condition and one-third desert landscaping. Because of the size of the drainage area, the estimated percentages of impervious area were based upon zoning categories assuming full development. Corresponding CN's and impervious area percentages for zoning types are shown in Table 4.

The TR55 method was used for determining subarea lag time based upon hydraulic length, CN, and average basin slope, then modified using factors based upon CN, percentage of impervious area and percentage of hydraulic length modified. The subarea characteristics are summarized in Table 2.

iii. Procedures and Assumptions for Hydrograph Routings

For routings, again the same procedures used by Boyle were followed and incorporated into the model. The kinematic wave routing method in HEC-1 was used to route hydrographs. Overland flow through city streets was modeled as very wide, shallow trapezoids. Storm sewers originating in the overall drainage are, conveying flow across subarea boundaries, were modeled. Capacities of storm sewers were set for surcharge conditions by assuming the friction slope equaled the average ground slope the pipe. The

84" storm sewer that originates outside the drainage area was ignored, because the pipe size was constant throughout the drainage area, and because the ground elevations at the points where the sewer entered and exited the drainage area were equal, implying no capacity was available under surcharge conditions. Existing open channels were included in the model.

The overland routing of the runoff hydrographs is based upon the major street pattern. Because most major streets run at approximately 45° to the contour lines, it was assumed for the HNTB model that overland flow would concentrate at intersections of major streets, then split, flowing westerly and southerly along the streets with split capacities based upon street right-of-way width and average street slope for next 1/2-mile reach. At downstream intersections, the process of concentration and split was repeated. The flow splits used in the model are summarized in Table 3.

Significant retention was modeled in three locations: at the Southern Pacific Railroad for a short reach west of Country Club Drive, behind the banks of the Tempo Canal north of the Southern Pacific railroad embankment, and at the retention basin on the grounds of Roosevelt School adjacent to the Tempe Canal and 8th Avenue. The first two resulted in significant reduction and delay of outflow peaks for all storms analyzed, and the third resulted in significant effects upon peaks for the ten-year storm with only minor influence on peaks from more severe storms. Additional major storage was modeled on the grounds of the University of Arizona Experimental Farm as detention rather than retention. Storage is summarized in Table 5.

B. Results

1) HNTB Model

Tables 6, 7 and 8 list the resulting peak flows and runoffs volumes for all subareas and concentration points from the model runs of the 10-, 50- and 100-year storms. Table 9 lists the outflows impacting the Outer Loop project. Computer printouts are included as Appendix A.

A peak 50-year flow of 1279 cfs resulted at the intersection of the Superstition Freeway channel and the Mesa Drainage System channel paralleling the Tempe Canal. It must be noted that this peak does not take into account any flow passing the diversion weir at the Superstition Freeway channel and the Extension Road detention basin. Determination of flow from the "controlled" drainage areas upstream will be included in the hydrology report summarizing all inflows to the proposed outfall system.

There is also a 50-year flow of 130 cfs that is currently delivered to the Tempe canal by the two 48-inch pipes in Broadway. There are indications that currently the outlet of these pipes is constricted to two 24-inch pipes for release into the Tempe Canal. However, if these pipes are to be picked up as part of this project, the constriction will be removed.

In addition, there is a 50-year flow of 27 cfs that overtops the Tempe Canal north of the Southern Pacific Railroad.

2) Comparison with Yost & Gardner Study and with Preliminary HNTB Results

The total of the 50-year outflows (1279 + 130 + 27), discussed in the pre-

ceding section, is around 1500 cfs, which is equivalent to the 1600 cfs determined by the 1975 Yost and Gardner Study. The volume of runoff (352 acre-feet for the 1230 cfs and 41 acre-feet for the 100 cfs pipe flow) of about 400 acre-feet is somewhat in excess of the Yost and Gardner study volume of 337 acre feet.

There was a significant increase in peaks and volumes over the HNTB preliminary model runs for three reasons. First, the base CN for previous area was raised from 68 to 72, to be more consistent with the Boyle model and because of additional field observations. This had a significant effect upon both peaks and volumes. Second, the area north of the Southern Pacific Railroad was allowed to contribute runoff through the culvert south of the ASU farm. This had no effect upon the peak discharges listed in Table 2, due to the delaying effect of the storage behind the railroad embankment; however, it did increase runoff volumes. Third, the Boyle rainfall curves were used rather than the Mesa curves. (The Mesa curves were used by Yost & Gardner).

TABLE 1

Rainfall Depths Used in HEC-1

	10-year	50-year	100-year
	Mesa (BOYLE)	Mesa (BOYLE)	Mesa (BOYLE)
5 min.	0.43" (0.46")	0.66" (0.63")	0.69" (0.72")
15 min.	0.94" (0.90")	1.36" (1.23")	1.44" (1.41")
1 hr.	1.55" (1.58")	2.25" (2.16")	2.38" (2.48")
2 hr.	1.66" (1.68")	2.40" (2.38")	2.59" (2.72")
3 hr.	1.75" (1.78")	2.48" (2.52")	2.73" (2.89")
6 hr.	1.92" (2.02")	2.61" (2.80")	3.00" (3.20")
12 hr.	2.10" (2.24")	2.76" (3.10")	3.29" (3.54")
24 hr.	2.40" (2.46")	3.00" (3.42")	3.60" (3.90")

The values in parentheses were used by Boyle Engineering for their HEC-1 modeling of offsite area between the Outer Loop corridor and the Tempe Canal; for consistency and compatibility of results, the Boyle values were used in the HNTB model.

TABLE 2
SUBAREA CHARACTERISTICS AND HEC-1 PARAMETERS

Subarea Number	Total Area (Acres)	Directly Contributing Area (Acres)	Maximum Retention Volume (Acre-Feet)	Percent Impervious Area	SCS Curve Number	Hydraulic Length (Feet)	SCS Lag Time (Hours)
1	55.5	32.7	3.65	67%	89	3600	0.73
2	76.2	58.0	2.96	71%	90	3900	0.77
3	76.4	40.8	6.46	77%	92	3700	0.72
4	34.5	24.6	1.73	75%	92	2900	0.60
5	156.3	83.0	12.17	71%	90	5200	0.96
6	159.4	102.7	9.42	68%	90	5200	0.98
7	75.4	56.8	3.34	74%	92	3700	0.73
8	155.7	78.0	12.80	68%	90	5200	0.98
9	158.2	78.7	13.12	67%	90	5200	0.98
10	114.2	31.0	15.63	82%	93	5000	0.90
11	76.6	25.6	7.09	54%	86	4100	0.89
12	76.7	50.6	4.15	66%	89	3900	0.79
13	44.7	23.5	3.80	76%	92	2800	0.58
14	171.0	66.4	13.81	50%	85	5200	1.11
15	150.4	47.1	17.25	70%	90	5200	0.97
16	76.7	54.4	4.03	78%	92	3800	0.73
17	165.2	20.7	17.44	31%	83	4000	1.04
18	82.1	54.1	4.66	70%	90	4000	0.79
19	158.6	156.3	0.41	64%	89	5300	1.02
20	159.0	102.6	9.72	74%	91	5400	0.98
21	104.8	23.6	15.92	85%	94	4500	0.82
22	81.5	34.9	7.73	70%	90	4000	0.79
23	159.1	137.0	3.55	66%	89	5300	1.00
24	179.9	96.8	14.36	73%	91	5300	0.97
25	173.6	94.3	13.12	70%	90	5700	1.04
26	129.5	60.4	12.45	75%	92	5400	0.98
27	226.4	153.0	10.67	57%	87	5700	1.13
28	146.5	133.9	2.03	66%	89	4600	0.90
29	79.7	14.6	10.79	70%	90	4100	0.80
30	111.9	44.5	12.10	76%	92	4800	0.89

TABLE 3
FLOW SPLIT RATIOS AT SUBAREA CONCENTRATION POINTS

Subarea	Streets	Slope	ROW	Split Ratio	Subarea	Streets	Slope	ROW	Split Ratio
1	Date	.24%	50'	1.01 South vs.	12	Extension	.20%	70'	1.00 South vs.
	University	.12%	70'	1.00 West		Main	.12%	100'	1.11 West
2	Date	.21%	60'	1.00 South vs.	14	Alma School	.12%	70'	1.00 South vs.
	Main	.08%	100'	1.03 West		University	.33%	85'	2.01 West
4	Extension	.23%	90'	1.34 South vs.	15	Alma School	.23%	80'	1.00 South vs.
	Broadway	.16%	80'	1.00 West		Main	.31%	100'	1.45 West
5	Extension	.19%	85'	1.00 South vs.	18	Longmore	.28%	75'	1.00 South vs.
	8th Ave.	.19%	85'	1.00 West		Broadway	.26%	105'	1.35 West
6	Extension	.19%	90'	1.00 South vs.	19	Longmore	.21%	80'	1.05 South vs.
	Southern	.27%	105'	1.39 West		Pueblo	.19%	80'	1.00 West
7	Alma School	.27%	80'	1.36 South vs.	20	Longmore	.08%	90'	1.00 South vs.
	Broadway	.19%	70'	1.00 West		Southern	.19%	120'	2.05 West
8	Alma School	.23%	85'	1.02 South vs.	22	Dobson	.19%	110'	1.00 South vs.
	8th Ave.	.22%	85'	1.00 West		Broadway	.32%	90'	1.07 West
9	Alma School	.16%	110'	1.00 South vs.	23	Dobson	.27%	110'	1.76 South vs.
	Southern	.25%	110'	1.25 West		8th Ave.	.29%	60'	1.00 West
11	Extension	.23%	70'	1.00 South vs.	24	Dobson	.08%	110'	1.00 South vs.
	University	.24%	80'	1.16 West		Southern	.12%	110'	1.22 West

TABLE 4

CURVE NUMBERS AND IMPERVIOUS AREA PERCENTAGES BY ZONING CATEGORIES

Zoning Category	Zoning Type	Percentage of Impervious Area	SCS Curve Number (CN)
AG	Agricultural	5%	78
R1-35	Single Family Residential	25%	78
R1-15	Single Family Residential	30%	80
R1-9	Single Family Residential	45%	84
R1-7	Single Family Residential	55%	86
R1-6	Single Family Residential	60%	88
R-2	Restricted Multiple Residential	70%	90
R-3	Limited Multiple Residential	70%	90
R-4	General Multiple Residential	70%	90
R-5	Residential Service	60%	88
C-1	Neighborhood Commercial	85%	94
C-2	Limited Commercial	85%	94
C-3	General Commercial	85%	94
M-1	Restricted Industrial	75%	92
M-2	General Industrial	75%	92
HRZ	High Rise Zone	85%	94
SCHOOL		30%	80

Note: Impervious area percentage based upon full development. Curve numbers are based upon CN of 72 for pervious and CN of 98 for impervious; except for AG, which is SCS value.

TABLE 5

Major Runoff Storage Volume Within Drainage Area

A) Retention - Treated as dead storage
Behind S.P.R.R. from Country Club to Extension
9 acre-feet

Behind Tempe Canal bank and S.P.R.R. near Apache
10 acre-feet

On grounds of Roosevelt Elementary School - south of 8th Avenue and east of Tempe Canal
12 acre-feet

B) Detention - Drained by culvert under S.P.R.R.
On grounds of University of Arizona Experimental Farm, behind S.P.R.R. embankment
Approximately 60 acre-feet

TABLE 6
10-YEAR 24-HOUR STORM: PEAK FLOWS AND RUNOFF VOLUMES

Subarea/ Concentration Point	Subarea			Concentration Point		
	Peak Flow	Time of Peak	Volume	Peak Flow	Time of Peak	Volume
1	29 cfs	12.83	3.8 AF	29 cfs	12.83	3.8 AF
2	53 cfs	12.83	7.1 AF	65 cfs	12.92	9.0 AF
3	43 cfs	12.83	5.6 AF	70 cfs	13.00	10.0 AF
4	29 cfs	12.67	3.3 AF	29 cfs	12.67	3.8 AF
5	64 cfs	13.08	10.2 AF	80 cfs	13.08	12.4 AF
6	77 cfs	13.08	12.5 AF	116 cfs	13.17	18.7 AF
7	60 cfs	12.83	7.7 AF	70 cfs	12.83	9.3 AF
8	59 cfs	13.08	9.6 AF	138 cfs	13.17	21.2 AF
9	59 cfs	13.08	9.6 AF	214 cfs	13.25	37.5 AF
10	29 cfs	13.00	4.4 AF	161 cfs	13.42	36.1 AF
11	17 cfs	13.00	2.5 AF	31 cfs	13.00	4.4 AF
12	43 cfs	12.92	5.9 AF	85 cfs	13.08	12.5 AF
13	29 cfs	12.67	3.2 AF	59 cfs	12.92	9.6 AF
14	34 cfs	13.25	6.3 AF	50 cfs	13.25	8.7 AF
15	36 cfs	13.08	5.8 AF	90 cfs	13.33	15.3 AF
16	57 cfs	12.83	7.4 AF	131 cfs	13.17	23.2 AF
17	78 cfs	13.17	13.9 AF	206 cfs	13.33	37.1 AF
18	48 cfs	12.92	6.7 AF	104 cfs	13.00	47.7 AF
19	108 cfs	13.17	18.2 AF	215 cfs	13.17	49.0 AF
20	81 cfs	13.08	13.2 AF	253 cfs	13.33	44.1 AF
21	25 cfs	12.92	3.6 AF	240 cfs	13.42	45.9 AF
22	31 cfs	12.92	4.3 AF	86 cfs	13.08	31.7 AF
23	96 cfs	13.08	16.0 AF	242 cfs	13.25	63.8 AF
24	77 cfs	13.08	12.5 AF	425 cfs	13.42	108.9 AF
25	67 cfs	13.17	11.5 AF	417 cfs	13.58	70.8 AF
26	50 cfs	13.08	8.2 AF	79 cfs	13.33	16.0 AF
27	87 cfs	13.25	16.1 AF	139 cfs	13.42	21.4 AF
28	102 cfs	13.00	15.6 AF	360 cfs	13.42	120.5 AF
29	13 cfs	12.92	1.8 AF	780 cfs	13.67	193.1 AF
30	40 cfs	13.00	6.1 AF	40 cfs	13.00	6.1 AF

See Exhibit 1

TABLE 7
50-YEAR 24-HOUR STORM: PEAK FLOWS AND RUNOFF VOLUMES

Subarea/ Concentration Point	Subarea			Concentration Point		
	Peak Flow	Time of Peak	Volume	Peak Flow	Time of Peak	Volume
1	47 cfs	12.83	6.9 AF	47 cfs	12.83	6.9 AF
2	84 cfs	12.83	12.1 AF	105 cfs	12.92	15.6 AF
3	67 cfs	12.83	9.9 AF	112 cfs	12.92	17.6 af
4	45 cfs	12.67	5.5 AF	45 cfs	12.67	9.8 AF
5	102 cfs	13.08	18.8 AF	126 cfs	13.00	24.4 AF
6	124 cfs	13.08	22.1 AF	184 cfs	13.08	34.3 AF
7	92 cfs	12.83	12.8 AF	109 cfs	12.83	17.0 AF
8	94 cfs	13.08	17.9 AF	215 cfs	13.08	39.9 AF
9	95 cfs	13.08	18.1 AF	331 cfs	13.17	68.1 AF
10	44 cfs	13.00	9.6 AF	229 cfs	13.25	64.0 AF
11	28 cfs	13.00	5.9 AF	52 cfs	13.00	9.3 AF
12	69 cfs	12.92	10.4 AF	141 cfs	13.00	22.6 AF
13	45 cfs	12.67	5.8 af	94 cfs	13.00	20.8 AF
14	60 cfs	13.25	14.0 AF	87 cfs	13.17	19.0 AF
15	58 cfs	13.08	12.5 AF	153 cfs	13.25	30.7 AF
16	88 cfs	12.83	12.4 af	217 cfs	13.17	45.7 AF
17	142 cfs	13.17	24.6 AF	354 cfs	13.25	70.3 AF
18	77 cfs	12.83	11.6 af	153 cfs	13.00	83.5 AF
19	176 cfs	13.08	29.8 AF	344 cfs	13.17	85.2 AF
20	128 cfs	13.08	22.8 AF	431 cfs	3.25	80.1 AF
21	37 cfs	12.92	8.2 AF	379 cfs	13.33	86.1 AF
22	50 cfs	12.83	8.5 AF	133 cfs	13.00	56.4 AF
23	157 cfs	13.08	26.7 AF	388 cfs	13.25	108.5 AF
24	122 cfs	13.08	22.5 AF	682 cfs	13.33	184.9 AF
25	108 cfs	13.17	21.1 AF	713 cfs	13.50	136.6 AF
26	78 cfs	13.08	15.1 AF	130 cfs	13.25	31.3 AF
27	147 cfs	13.25	29.2 AF	255 cfs	13.33	41.5 AF
28	166 cfs	13.00	25.8 AF	614 cfs	13.92	210.8 AF
29	21 cfs	12.92	5.0 AF	1279 cfs	13.50	352.4 AF
30	63 cfs	13.00	11.8 AF	63 cfs	13.00	17.4 AF

See Exhibit 2

TABLE 8
100-YEAR 24-HOUR STORM: PEAK FLOWS AND RUNOFF VOLUMES

Subarea/ Concentration Point	Subarea			Concentration Point		
	Peak Flow	Time of Peak	Volume	Peak Flow	Time of Peak	Volume
1	57 cfs	12.83	9.0 AF	57 cfs	12.83	9.0 AF
2	101 cfs	12.83	14.9 AF	126 cfs	12.92	19.4 AF
3	79 cfs	12.75	12.9 AF	134 cfs	12.92	22.5 AF
4	53 cfs	12.67	6.8 AF	63 cfs	13.42	13.6 AF
5	122 cfs	13.00	24.7 AF	150 cfs	13.00	32.5 AF
6	148 cfs	13.08	28.0 AF	220 cfs	13.08	44.2 AF
7	108 cfs	12.83	15.7 AF	129 cfs	12.83	21.5 AF
8	113 cfs	13.08	23.7 AF	256 cfs	13.08	52.3 AF
9	113 cfs	13.08	24.0 AF	392 cfs	13.17	87.5 AF
10	52 cfs	13.00	14.0 AF	264 cfs	13.25	79.7 AF
11	35 cfs	13.00	8.7 AF	63 cfs	13.00	13.2 AF
12	83 cfs	12.83	13.3 AF	170 cfs	13.00	13.3 AF
13	53 cfs	12.67	7.5 AF	123 cfs	13.58	28.1 AF
14	73 cfs	13.25	19.9 AF	106 cfs	13.25	27.0 AF
15	69 cfs	13.08	18.1 AF	184 cfs	13.25	42.5 AF
16	104 cfs	12.83	15.3 AF	265 cfs	13.08	60.7 AF
17	176 cfs	13.17	30.3 AF	436 cfs	13.25	91.0 AF
18	92 cfs	12.83	14.7 AF	177 cfs	13.00	98.6 AF
19	211 cfs	13.08	35.7 AF	410 cfs	13.17	103.6 AF
20	152 cfs	13.08	28.9 AF	522 cfs	13.25	103.7 AF
21	44 cfs	12.92	12.3 AF	449 cfs	13.33	112.5 AF
22	60 cfs	12.83	11.5 AF	157 cfs	13.00	68.1 AF
23	188 cfs	13.08	32.7 AF	465 cfs	13.17	130.3 AF
24	145 cfs	13.08	29.4 AF	815 cfs	13.33	225.3 AF
25	129 cfs	13.08	27.6 AF	865 cfs	13.42	182.7 AF
26	92 cfs	13.08	20.1 AF	157 cfs	13.17	41.2 AF
27	178 cfs	13.25	37.3 AF	314 cfs	13.25	55.8 AF
28	199 cfs	13.00	31.3 AF	809 cfs	13.75	257.8 AF
29	25 cfs	12.92	8.0 AF	1562 cfs	13.83	448.5 AF
30	74 cfs	13.00	16.1 AF	74 cfs	13.00	32.3 AF

See Exhibit 3

TABLE 9

Summary of HEC-1 Model Results for "Uncontrolled" Area

	Channel Junction at Superstition	Two 48" Pipes at Broadway	Overflow at Tempe Canal North of S.P.R.R.
10-year	780 cfs	79 cfs	0 cfs
	193 ac. ft.	16 ac. ft.	0 ac. ft.
50-year	1279 cfs	130 cfs	27 cfs
	352 ac. ft.	31 ac. ft.	7 ac. ft.
100-year	1562 cfs	130 cfs	61 cfs
	448 ac. ft.	40 ac. ft.	22 ac. ft.

Assuming no flow from the retention basin and channel at Extension Road and the Superstition Freeway.

TABLE 3
FLOW SPLIT RATIOS AT SUBAREA CONCENTRATION POINTS

Subarea	Streets	Slope	ROW	Split Ratio	Subarea	Streets	Slope	ROW	Split Ratio
1	Date	.24%	50'	1.01 South vs.	12	Extension	.20%	70'	1.00 South vs.
	University	.12%	70'	1.00 West		Main	.12%	100'	1.11 West
2	Date	.21%	60'	1.00 South vs.	14	Alma School	.12%	70'	1.00 South vs.
	Main	.08%	100'	1.03 West		University	.33%	85'	2.01 West
4	Extension	.23%	90'	1.34 South vs.	15	Alma School	.23%	80'	1.00 South vs.
	Broadway	.16%	80'	1.00 West		Main	.31%	100'	1.45 West
5	Extension	.19%	85'	1.00 South vs.	18	Longmore	.28%	75'	1.00 South vs.
	8th Ave.	.19%	85'	1.00 West		Broadway	.26%	105'	1.35 West
6	Extension	.19%	90'	1.00 South vs.	19	Longmore	.21%	80'	1.05 South vs.
	Southern	.27%	105'	1.39 West		Pueblo	.19%	80'	1.00 West
7	Alma School	.27%	80'	1.36 South vs.	20	Longmore	.08%	90'	1.00 South vs.
	Broadway	.19%	70'	1.00 West		Southern	.19%	120'	2.05 West
8	Alma School	.23%	85'	1.02 South vs.	22	Dobson	.19%	110'	1.00 South vs.
	8th Ave.	.22%	85'	1.00 West		Broadway	.32%	90'	1.07 West
9	Alma School	.16%	110'	1.00 South vs.	23	Dobson	.27%	110'	1.76 South vs.
	Southern	.25%	110'	1.25 West		8th Ave.	.29%	60'	1.00 West
11	Extension	.23%	70'	1.00 South vs.	24	Dobson	.08%	110'	1.00 South vs.
	University	.24%	80'	1.16 West		Southern	.12%	110'	1.22 West

TABLE 3

FLOW SPLIT RATIOS AT SUBAREA CONCENTRATION POINTS

Subarea	Streets	Slope	ROW	Split Ratio
1	Date	.24%	50'	1.01 South vs.
	University	.12%	70'	1.00 West
2	Date	.21%	60'	1.00 South vs.
	Main	.08%	100'	1.03 West
4	Extension	.23%	90'	1.34 South vs.
	Broadway	.16%	80'	1.00 West
5	Extension	.19%	85'	1.00 South vs.
	8th Ave.	.19%	85'	1.00 West
6	Extension	.19%	90'	1.00 South vs.
	Southern	.27%	105'	1.39 West
7	Alma School	.27%	80'	1.36 South vs.
	Broadway	.19%	70'	1.00 West
8	Alma School	.23%	85'	1.02 South vs.
	8th Ave.	.22%	85'	1.00 West
9	Alma School	.16%	110'	1.00 South vs.
	Southern	.25%	110'	1.25 West
11	Extension	.23%	70'	1.00 South vs.
	University	.24%	80'	1.16 West
12	Extension	.20%	70'	1.00 South vs.
	Main	.12%	100'	1.11 West
14	Alma School	.12%	70'	1.00 South vs.
	University	.33%	85'	2.01 West
15	Alma School	.23%	80'	1.00 South vs.
	Main	.31%	100'	1.45 West
18	Longmore	.28%	75'	1.00 South vs.
	Broadway	.26%	105'	1.35 West
19	Longmore	.21%	80'	1.05 South vs.
	Pueblo	.19%	80'	1.00 West
20	Longmore	.08%	90'	1.00 South vs.
	Southern	.19%	120'	2.05 West
22	Dobson	.19%	110'	1.00 South vs.
	Broadway	.32%	90'	1.07 West
23	Dobson	.27%	110'	1.76 South vs.
	8th Ave.	.29%	60'	1.00 West
24	Dobson	.08%	110'	1.00 South vs.
	Southern	.12%	110'	1.22 West

OUTER LOOP HIGHWAY

SR 360 INTERCHANGE

HYDROLOGY STUDY

PART 2 - Inflow Hydrographs to Outer Loop Offsite Drainage System

HNTB

October 1986

Registered Professional Engineer
CERTIFICATE NO.
18410
RICHARD E. SCHWAB
Date Signed 10/13/86
ARIZONA, U. S. A.

EXECUTIVE SUMMARY

This report presents the results of a hydrology study using HEC-1 computer models and work by others to determine the inflow hydrographs to the proposed Outer Loop offsite drainage system. The 100-year and 50-year storms were modeled; the study resulted in hydrographs at 20 locations along the Outer Loop corridor and the Superstition Freeway, to be used as the basis for hydraulic modeling in the Price Road Alternatives Analysis study.

The peak flows, times of peaks and runoff volumes for the hydrographs are shown in Tables 5 and 6. The hydrographs are listed and plotted in Appendix A.

Table of Contents

Executive Summary

Table of Contents

List of Tables and Exhibits

A Purpose

B Methodology

C Drainage Area

D Assumptions

E Computer Model

F Results

List of Tables and Exhibits

Tables

1. Rainfall Depths Used in HEC-1

2. Subarea Characteristics and HEC-1 Parameters

3. Preliminary Chandler Hydrograph

4. 24-Hour Storm: Peak Flows and Runoff Volumes for Area South of Superstition Freeway

5. 100-Year Inflow Hydrographs: Peak Flows and Runoff Volumes

6. 50-Year Inflow Hydrographs: Peak Flows and Runoff Volumes

A. Purpose

This study, Part 2 of the Outer Loop Highway SR 360 Interchange Hydrology Study, was performed to generate the design storm offsite flow hydrographs expected to inflow to an outer loop drainage outfall. The outfall will originate in the SR 360 interchange area, traverse the Outer Loop Corridor and terminate at the Salt River, and will be designed to allow gravity flow from the Carriage Lane detention basin. The locations of the design hydrographs are shown on Exhibit 1.

B. Methodology

As in Part 1 of the Hydrology Study, Soil Conservation Service (SCS) hydrologic modeling methodology was used as the basis for hydrograph generation. Hydraulic routing of hydrographs was accomplished by the kinematic wave method, except for reservoir routing through detention ponds, which was performed by the modified Puls routing method. Hydrologic modeling and hydraulic routing were accomplished by use of the Corps of Engineers computer program HEC-1. The rainfall data input to HEC-1 is shown in Table 1.

TABLE 1

Rainfall Depths Used in HEC-1

	10-year	50-year	100-year
5 min.	0.46"	0.63"	0.72"
15 min.	0.90"	1.23"	1.41"
1 hr.	1.58"	2.16"	2.48"
2 hr.	1.68"	2.38"	2.72"
3 hr.	1.78"	2.52"	2.89"
6 hr.	2.02"	2.80"	3.20"
12 hr.	2.24"	3.10"	3.54"
24 hr.	2.46"	3.42"	3.90"

C. Drainage Area

The runoff impacting the Outer Loop Corridor is generated by a large drainage area that can be divided into several distinct, smaller drainage areas, as shown on Exhibit 1. Some of the areas contribute runoff that directly impacts the corridor; the remainder of the areas drain to detention ponds or lakes which subsequently outlet to the outfall system.

The area lying east of the corridor and west of the Tempe Canal, between the Salt River and the Superstition Freeway, was modeled in detail by the Boyle Engineering Corporation with HEC-1. The flows from this area (referred to as the Boyle area) directly impact the corridor. The area east of the Boyle area, west of Country Club Drive, and north of the Superstition was modeled in detail by HNTB with HEC-1, and documented in Part 1 of this hydrology study. This area currently drains to an open channel (the Mesa Drain) which passes under the Superstition Freeway, continues southward parallel to the Tempe Canal and terminates at the Carriage Lane detention basin. The open channel will be eliminated with the construction of

the Outer Loop Highway, leaving the HNTB study area uncontrolled by any detention basins. The flows from this uncontrolled area will impact the southeastern portion of the Outer Loop Highway - Superstition Freeway Interchange, presuming the Mesa Drain crossing under the Superstition Freeway is undisturbed. One other area directly impacts the corridor: a narrow strip of land adjacent to the corridor right-of-way south of the Superstition Freeway that currently drains to the Mesa Drain, rather than to the Dobson Ranch Lake or through streets to the Carriage Lane detention basin.

North of the Superstition Freeway, a significant portion of the City of Mesa east of the uncontrolled area contributes runoff indirectly, through overflow and pumped outflow of the detention ponds along the Superstition Freeway. The basins outlet to an open channel (the same channel drains the uncontrolled area) paralleling the freeway downstream of the westernmost basin, at Extension Road. The design hydrology for the detention basins and the channel along the Superstition Freeway was performed by Yost and Gardner Engineers, using the modified rational method, in the mid 1970's.

South of the Superstition Freeway and east of the corridor lie three drainage areas controlled by major detention areas. Between the corridor and Alma School Road, north of Guadalupe Road is the area draining directly to the Dobson Ranch Lake, which provides significant detention storage volume. South of Guadalupe, and north of the Western Canal between the Price Road corridor and Dobson Road lies the area draining directly to the Carriage Lane detention basin. East of that area, east of the Dobson Ranch Lake area and west of the Southern Pacific Railroad, is the area contributing runoff to the detention basin in Palo Verde Park. The Palo Verde Park basin overflow and outflow eventually becomes additional inflow to the Carriage Lane detention basin. Drainage basin characteristics are shown in Table 2.

D. Design Assumptions

1) Because the Outer loop offsite drainage collector system is "insulated" by the Carriage Lane detention basin and the Dobson Ranch Lake from runoff peaks originating in the indirectly contributing areas, it was not necessary to model those areas to the degree of detail used in the modeling of the directly contributing areas.

2) Because highly detailed modeling was not necessary for certain areas, those areas can be modeled by "single basin" HEC-1 models without subdividing the areas into the much smaller subareas used by Boyle and HNTB for detailed modeling.

3) A HEC-1 calibration run for the modeled-in-detail uncontrolled area north of the Superstition Freeway, using one subarea rather than thirty subareas, results in the determination of a SCS lag time (and, therefore, an average street flow velocity for the time of concentration of a large subarea with long hydraulic lengths) that, when used with total area and a composite CN value, will yield close approximations of peak discharge, total runoff volume and time of peak discharge.

4) The areas south of the Superstition Freeway have much less localized retention measures such as yard and parking lot storage, because of heavier usage of major "vicinity" type storage basins. See Exhibit 2 for locations of major detention basins.

5) The SCS curve numbers (CN's) for the areas south of the Superstition Freeway will tend to be lower than those of the uncontrolled area because of the predominance of residential development, with less commercial and multi-residential and practically no industrial development. CN's of 82 to 85 are appropriate, the lower limit depending upon whether agricultural land exists within the drainage area.

6) Because of the existence of four major retention areas upstream of the Palo Verde Park detention basin, plus the existence of minor retention areas in commercial and multi-residential developments within the same contributing areas, 30% of the total area upstream of the Palo Verde Park basin was considered non-contributing for the 100-year event.

7) The area contributing to the 48-inch pipe south of Guadalupe (currently outletting to the Mesa Drain paralleling the Tempe Canal) was included in the area for the Carriage Lane detention basin. Within the HEC-1 model, flow was diverted to the pipe prior to the combining of flows in the detention basin, the diversion peak limited to the capacity of the pipe and the diversion volume limited on a percentage of contributing area basis.

8) It was assumed that flow will weir flow out of the Palo Verde Park detention basin after the basin completely filled; below the weir flow elevation, flow outlets by pipe at a rate that would drain the pond in about 3 days, to a ditch flowing to the Carriage Lane detention basin.

9) The inflow to the Carriage Lane detention basin, in addition to the runoff draining there directly and the Palo Verde Park basin outflow, includes pumped outflow hydrographs from Chandler and Gilbert. The preliminary information available upon the Chandler flow (Table 3) indicated that a 100-cfs peak rate would be pumped, based upon a 100-year, 6-hour storm; the 100 cfs would arrive at Carriage Lane 4 hours subsequent to the start of the design storm, with the inflow continuing for 36 hours. The assumption was made that the 6 hour design storm for Chandler would occur exactly in the middle of the Outer Loop design storm of 24 hours, because the middle of the 100-year 24-hour design storm includes the 100-year 6-hour design storm due to the method used to establish the hypothetical 100-year 24-hour storm. Therefore, the 6-hour storm begins at hour 9 of the 24-hour storm, and the 100-cfs inflow begins at hour 13.

No information was available upon the proposed inflow to the Carriage Lane basin from Gilbert except that the peak rate would be limited to 100 cfs. It was assumed to have the same inflow

hydrograph as the Chandler flow; this is supported in part by the fact that the flows have to travel approximately the same distances to the Carriage Lane basin.

10) Dobson Ranch Lake was considered to be usable detention storage with a minimum of three feet of volume available for storage of runoff. The outlet rate used in the model is based upon a three-day drawdown to normal lake level. The lake drains via a 48" pipe to the existing Mesa Drain paralleling the Tempe Canal, a few hundred feet north of Guadalupe Road. The overflow spillway is at the same location.

11) The long narrow area directly contributing offsite runoff to the Outer Loop corridor south of the Superstition Freeway is appropriate to model as one hydrograph rather than as the several smaller hydrographs that are likely to be intercepted in that reach. This assumption has no effect upon runoff volume and little effect upon peaks, since the area is close to the proposed collector and peaks will occur well before the arrival of the more significant peaks.

12) The area east of the uncontrolled area, north of the Superstition Freeway, is controlled by a series of detention ponds. These existing ponds were designed by Yost and Gardner for 50-year peak flows and volumes determined using the modified rational method, a methodology not compatible with the SCS methodology used by the HEC-1 computer program. However, a method of comparison and calibration is available: the uncontrolled area modeled in detail by HNTB using HEC-1 was also studied by Yost & Gardner using the modified rational method. The modified rational method 50-year event analysis resulted in a peak of 1600 cfs and a total runoff volume of 337 acre-feet for the uncontrolled area. The peak is significantly higher than the HEC-1 50-year peak of 1279 cfs, but equivalent to the 100-year peak of 1562 cfs. However, the 50-year modified rational method runoff volume is equivalent to the 50-year HEC-1 volume of 352 acre-feet, significantly less than the 100-year HEC-1 volume of 448 acre-feet. Therefore, the rough assumption may be made that the 50-year design peak discharges from the controlled areas determined by the modified rational method are equivalent to the 100-year peak discharges that would result if that area were modeled with HEC-1. Further, the rough assumption may be made that the HEC-1 100-year event runoff volume will be about 133% (448 ÷ 337 = 1.33) of the modified ration method 50-year runoff volume from the controlled area.

The Yost and Gardner study determined that the total runoff volume of the 24-hour, 50-year event from their areas C, D, E, F, G, H, I and J was 1206 acre-feet. 133% of that yields 1600 acre-feet. The available total design storage capacity in 8 detention ponds either existing or under construction along the Superstition Freeway is 1160 acre-feet. The difference between the estimated 100-year volume and the available storage is about 440 acre-feet. If it is assumed that additional, temporary storage

(such as storage above design elevations in detention areas, channel storage behind weirs, etc.) is available within the Mesa/ Superstition Freeway drainage system, then the control structure in the channel downstream of Extension Road does not overtop and the excess volume above the design storage volume can be passed through the orifice in the control structure. At 160 cfs, which is the calculated flow rate through the orifice with the upstream water surface just below the overflow weir elevation, it would take 33 hours to drain the excess volume. The pump-out durations for the design volumes in the ponds averages 7 days; therefore the control structure would discharge 85 cfs (total design volume divided by 7 days) for 7 days subsequent to the initial discharge rate of 160 cfs for the first 33 hours.

It is assumed that the gate in the control structure would be opened early in the storm when the overall storm magnitude becomes apparent. The hydrograph for the flow passing through the Extension Road control structure therefore begins the 160 cfs flow at hour 13 of the storm (past the most intense rainfall of the 24-hour storm, but well before the conclusion of the storm). This timing is conservative because it allows the control structure flow peak to impact very near the times of many of the other peaks inflowing to the Outer Loop offsite drainage system.

It must be noted that all the preceding assumptions about flow from east of Extension Road are very rough; overflow at the Extension Road control structure greatly in excess of 160 cfs might occur for any of several variances in assumptions. Some of the potential variances are: if temporary storage is not available for the excess runoff volume; if the excess runoff volume is greater than that extrapolated by the modified rational method/ HEC-1 comparison; if a 100-year storm storm of longer than 24 hours duration occurs (the Yost & Gardner study concluded maximum runoff volumes occur for 24-hour or less storms; this conclusion is based upon usage of the modified rational method, which is not an accurate method of runoff volume prediction for large areas). The potential exists for as much as 2000 cfs to overtop the control structure (based upon the height of channel above the weir). To accurately determine the 100-year discharge from the control structure would require HEC-1 modeling of the entire contributing area, and because Yost and Gardner reported considerable non-contributing area, detailed input information would be required.

13. Onsite flows from within the Outer Loop corridor ROW will have relatively minor and early peaks, because of short SCS lag times, because of small subareas, and because of minimal travel time to collector system. Onsite peaks will not appreciably affect design hydrographs for the offsite drainage system outfall, and therefore are not included in the inflow hydrographs for the alternative analysis.

E. Computer Model

All input hydrographs except those from Chandler, Gilbert and the Extension Road control structure were determined by HEC-1 modeling, saved, and reinput to the Outer Loop drainage system HEC-1 model to avoid unnecessary rerunning of the subareas during the alternatives analysis. The uncontrolled area HEC-1 model was run for the 10-, 50-, and 100-year 24-hour storms, using a 5-minute ordinate interval. The short ordinate interval was necessary because of several short subbasin lag times. Eight hydrographs from the uncontrolled area, along the Superstition Freeway channel and the Tempe Canal, were saved for input to the HEC-1 hydraulic model.

The Boyle area HEC-1 model was input, then modified slightly. The Boyle model originally used 10 minute ordinates; the ordinate interval was changed to 5 minutes for compatibility with the HNTB model. The Boyle model combined and routed hydrographs in a proposed open channel along the Outer Loop corridor; hydrograph combination commands were removed by HNTB to create seven separate inflow hydrographs at uniformly spaced locations along the corridor. The resulting seven hydrographs, run for the 50- and 100-year 24-hour storms, were saved for input to the hydraulic model.

The areas south of the Superstition freeway were run for the 50- and 100-year 24-hour storms as well, but using a 15-minute ordinate interval. The 15-minute ordinate interval was necessary because of a HEC-1 limitation of 300 ordinate intervals per run, requiring a 15-minute interval to simulate a 3-day period. Because of the detention alternative, the hydraulic model requires a run time long enough to allow the complete inflow of the Chandler and Gilbert hydrographs, which does not occur until hour 49. The areas south of the Superstition Freeway are large enough to allow use of the 15-minute ordinate interval without significant hydrograph distortion. The Chandler and Gilbert hydrographs were not reduced for the 50-year run, because no other data was available. It is likely that the pumped peaks would be the same but pumping would be of a shorter duration for the lesser storm. Subarea characteristics and HEC-1 parameters for the area south of the Superstition Freeway are in Table 2. Subarea results are in Table 4 and on Exhibit 1.

The HEC-1 hydrologic modeling for the areas south of the Superstition Freeway resulted in 50- and 100-year inflow hydrographs being saved for input to the hydraulic model at 4 locations: at the Carriage Lane detention basin (including the Chandler and Gilbert flows); at a pipe just south of Guadalupe Road; at a pipe carrying outflow from the Dobson Ranch Lake, just north of Guadalupe Road; and, for flow from the strip of offsite area adjacent to the Outer Loop corridor, at the southeastern portion of the proposed SR 360 interchange.

The other hydrograph input to the hydraulic model is the Extension Road control structure outflow hydrograph. The 100-year hydrograph assumed a flat peak of 160 cfs; the 50-year hydrograph assumed a flat base flow of 85 cfs, representing the cumulative pump-out flow from the basins along the Superstition Freeway. It is not necessary for the hydraulic model to run the entire duration of the control structure hydrograph, because an equivalent amount of base flow is routed north of the SR 360 interchange, bypassing the detention pond in the detention alternative.

All of the hydrographs generated with the 5-minute ordinate intervals were set to zero after 300 ordinates (24.92 hours), resulting in a very minor loss of runoff volume where discharges had not quite fallen to zero.

F. Results

The computer hydrologic models and the 20 input hydrographs for the hydraulic model are included in the appendix of this report, except for model for the uncontrolled area, which is included in the Appendix of the Hydrology Study Part 1. The peaks, time of peaks and volumes of the 100- and 50-year input hydrographs are shown in Tables 5 and 6, respectively, and on Exhibit 2.

TABLE 2
SUBAREA CHARACTERISTICS AND HEC-1 PARAMETERS

Subarea Number	Total Area (Sq. Mi.)	Directly Contributing Area (Sq. Mi.)	*Maximum Retention Volume (Acre-Feet)	Percent Impervious Area	SCS Curve Number	Hydraulic Length (Feet)	SCS Lag Time (Hours)
1	3.6	2.5	120	55	82	23,000	2.6
2	0.5	0.5	--	65	85	7800	0.9
3	2.9	2.9	--	65	85	18,500	2.1
4	0.1	0.1	--	65	85	9,000	0.5
5	See Boyle Engineering Corporation Report: "Outer Loop Freeway Superstition Freeway to the Salt River Hydrology Report Part A - Offsite Hydrology" May 1986						
6	See HNTB Report: "Outer Loop Highway SR360 Interchange Hydrology Study Part 1 - Area Uncontrolled by City of Mesa Detention Ponds" September 1986						
7	Not modeled with HEC-1; See Yost and Gardner Engineers Report: "Superstition Freeway Conceptual Study for Drainage (Tempe Canal to RWCD Canal)" February 1975						

*Not including detention specifically modeled in HEC-1

Subarea 1 - Palo Verde Park Basin Area
Subarea 2 = Carriage Lane Basin Area
Subarea 3 = Dobson Ranch Area
Subarea 4 = Offsite Area Adjacent to Corridor, South of Superstition Freeway
Subarea 5 = Boyle Area
Subarea 6 = HNTB "Uncontrolled" Area
Subarea 7 = Extension Road Basin Area

TABLE 3

PRELIMINARY CITY OF CHANDLER PUMPING HYDROGRAPH

Time (hours)	
0	Start of storm
1	Start pumping from Denver, Galveston, Arrowhead Basins to Price-Pecos Basin
2	Start pumping from Price-Pecos Basin to Carriage Lane Basin (100 cfs @ 3.5 fps)
4	Inflow to Carriage Lane Basin (100 cfs)
38	Stop pumping
40	End inflow to Carriage Lane Basin

This information is from Camp, Dreser and McKee, from their Chandler Stormwater Master Plan #84-313

Basis is a 100-year, 6-hour storm.

TABLE 4
24-HOUR STORM: PEAK FLOWS AND RUNOFF VOLUMES
FOR AREAS SOUTH OF SUPERSTITION FREEWAY

Return Frequency (Years)	Subarea/ Concentration Point	Subarea			Concentration Point		
		Peak Flow	Time of Peak	Volume	Peak Flow	Time of Peak	Volume
100	1	733 cfs	15.00	281 AF	733 cfs	15.00	281 AF
100	2	386 cfs	13.00	63 AF	546 cfs	13.00	842 AF
100	3	1143 cfs	14.25	364 AF	1143 cfs	14.25	364 AF
100	4	111 cfs	12.75	13 AF	111 cfs	12.75	13 AF
50	1	588 cfs	15.00	228 AF	588 cfs	15.00	228 AF
50	2	315 cfs	13.00	52 AF	475 cfs	13.00	778 AF
50	3	931 cfs	14.25	299 AF	931 cfs	14.25	299 AF
50	4	91 cfs	12.75	10 AF	91 cfs	12.75	10 AF
10	1	314 cfs	15.00	126 AF	314 cfs	15.00	126 AF
10	2	179 cfs	13.00	30 AF	379 cfs	13.00	689 AF
10	3	522 cfs	14.25	173 AF	522 cfs	14.25	173 AF
10	4	53 cfs	12.75	6 AF	53 cfs	12.75	6 AF

Subarea 1 = Palo Verde Park Basin Area

Subarea 2 = Carriage Lane Basin Area

Subarea 3 = Dobson Ranch Area

Subarea 4 = Offsite Area Adjacent to Corridor, South of Superstition Freeway

Notes: All 3 return frequency models include the 100 cfs each pumped flows from Chandler and Gilbert. Only the 100-year results are shown on map (See Exhibit 1).

TABLE 5

100-YEAR INFLOW HYDROGRAPHS: PEAK FLOWS AND RUNOFF VOLUMES

Hydrograph	Location	Peak Flow	Time of Peak	Volume
A	Superstition Freeway and Alma School Road	264 cfs	13.25	78 AF
B	Superstition Freeway and Longmore Road	186 cfs	13.25	32 AF
C	Superstition Freeway and Dobson Road	412 cfs	13.50	70 AF
D	Southern Avenue and Tempe Canal	679 cfs	13.75	125 AF
E	Southern Avenue and Tempe Canal (pipe)	130 cfs	12.50	108 AF
F	Superstition Freeway and Tempe Canal	35 cfs	14.00	7 AF
G	Broadway Road and Tempe Canal (pipe)	130 cfs	13.00	39 AF
H	Between S.P.R.R. and Apache at Tempe Canal	61 cfs	16.00	22 AF
I	Carriage Lane Basin	546 CFS	13.00	839 AF
J	South of Guadalupe Road at Outer Loop (pipe)	40 cfs	12.25	8 AF
K	North of Guadalupe Road at Outer Loop (pipe)	53 cfs	21.50	199 AF
L	Proposed SR 360 I/C	110 cfs	12.75	12 AF
M	Southern Avenue and Outer Loop Corridor	170 cfs	12.75	20 AF
N	Balboa and Outer Loop	219 cfs	12.75	25 AF
O	Broadway and Outer Loop	102 cfs	12.75	11 AF
P	Apache and Outer Loop	56 cfs	12.75	6 AF
Q	University Drive and Outer Loop Corridor	232 cfs	12.75	28 AF
R	8th Street and Outer Loop Corridor	115 cfs	12.75	18 AF
S	1st Street and Outer Loop Corridor	18 CFS	12.50	1 AF
Z	Extension Road and Superstition Freeway	160 cfs	13.00	641 AF

TABLE 6
50-YEAR INFLOW HYDROGRAPHS: PEAK FLOWS AND RUNOFF VOLUMES

Hydrograph	Location	Peak Flow	Time of Peak	Volume
A	Superstition Freeway and Alma School Road	228 cfs	13.25	62 AF
B	Superstition Freeway and Longmore Road	148 cfs	13.25	21 AF
C	Superstition Freeway and Dobson Road	335 cfs	13.50	50 AF
D	Southern Avenue and Tempe Canal	466 cfs	14.00	90 AF
E	Southern Avenue and Tempe Canal (pipe)	130 cfs	12.50	101 AF
F	Superstition Freeway and Tempe Canal	20 cfs	12.75	4 AF
G	Broadway Road and Tempe Canal (pipe)	129 cfs	13.25	30 AF
H	Between S.P.R.R. and Apache at Tempe Canal	27 cfs	16.75	7 AF
I	Carriage Lane Basin	474 cfs	13.00	775 AF
J	South of Guadalupe Road at Outer Loop (pipe)	40 cfs	12.25	8 AF
K	North of Guadalupe Road at Outer Loop (pipe)	42 cfs	21.50	163 AF
L	Proposed SR 360 I/C	90 cfs	12.75	10 AF
M	Southern Avenue and Outer Loop Corridor	138 cfs	12.75	17 AF
N	Balboa and Outer Loop	178 cfs	12.75	21 AF
O	Broadway and Outer Loop	83 cfs	12.75	9 AF
P	Apache and Outer Loop	45 cfs	12.75	5 AF
Q	University Drive and Outer Loop Corridor	186 cfs	12.75	23 AF
R	8th Street and Outer Loop Corridor	93 cfs	12.75	15 AF
S	1st Street and Outer Loop Corridor	14 cfs	12.50	1 AF
Z	Extension Road and Superstition Freeway	85 cfs	13.00	435 AF

APPENDIX E

OUTFALL ALTERNATIVES HYDRAULIC MODELS

ALTERNATIVE 1 HEC-2 MODEL

```
****************************************************
*  WATER SURFACE PROFILES                          *
*  DEVELOPED BY THE COE                            *
*  VERSION OF SEPTEMBER 1988                       *
*                                                  *
*  RUN DATE     7/26/89   TIME   17: 2:14          *
****************************************************
```

```
*************************************
*  DODSON AND ASSOCIATES, INC.      *
*  HYDROLOGIST AND CIVIL ENGINEERS  *
*  7015 W TIDWELL SUITE 107         *
*  HOUSTON, TEXAS 77092             *
*  (713) 895-8322                   *
*************************************
```

```
X     X  XXXXXXX   XXXXX             XXXXX
X     X  X       X     X           X     X
X     X  X       X                       X
XXXXXXX  XXXX     X         XXXXX    XXXXX
X     X  X       X                 X
X     X  X       X     X           X
X     X  XXXXXXX   XXXXX            XXXXXXX
```

END OF BANNER

THIS RUN EXECUTED 7/26/89 17: 2:14

```
**************************************************
 HEC2 RELEASE DATED SEPT 88

**************************************************

T1      PRICE ROAD DRAIN EXTENTION AND OUTFALL RESTUDY
T2      SUBCRITICAL RUN WITH 2-14'x13' BOX CULVERT TO RIVER -- ALT. 1
T3      100-YEAR DISCHARGE IN TUNNEL AND 10-YEAR FLOOD IN RIVER

J1  ICHECK   INQ      NINV     IDIR     STRT     METRIC   HVINS    Q        WSEL     FQ

             2                                                          1172.12

J2  NPROF    IPLOT    PRFVS    XSECV    XSECH    FN       ALLDC    IBW      CHNIM    ITRACE

     1               -1                                   -.1


NC    .015     .015     .015       .1       .3
QT       2    2331     2331
             BEGIN ENERGY DISSIPATOR - WEIR AT THE RIVER
X1   204.75       4        0       30        0        0        0
GR   1175.0       0   1158.0        0   1158.0       30   1175.0       30

X1   204.74                                  1        1        1                -1.85

             BEGIN APPROACH CHANNEL
X1   203.75                                 99       99       99                 .03

X1   203.66       4        0       29        9        9        9
GR   1175.0       0  1156.18        0  1156.18       29  1175.00       29

             BEGIN SECOND TRANSITION  - FROM BOX CULVERT TO RECT. CHANNEL
X1   203.65      10     0.01       29        1        1        1
BT       4        0  1180.00  1180.00     0.01  1180.00  1169.18       29  1180.00  1169.18
BT   29.01  1180.00  1180.00
GR   1180.0       0  1169.18     0.01  1156.18     0.01  1156.18       14  1169.18       14
GR   1169.2      15  1156.18       15  1156.18       29  1169.18       29  1180.00    29.01

X1   203.00                                 65       65       65                 .03
X2                                                       1

X1   200.00                                300      300      300                 .10
X2                                                       1

X1   197.00                                300      300      300                 .10
X2                                                       1
```

X1	194.00				300	300	300		.10	
X2							1			
X1	191.00				300	300	300		.11	
X2							1			
X1	188.00				300	300	300		.10	
X2							1			
QT	2	2305	2305							
X1	185.00				300	300	300		.10	
X2							1			
X1	182.00				300	300	300		.11	
X2							1			
QT	2	2279	2279							
X1	180.00	10	0.01	29	200	200	200			
BT	4	0	1182.38	1182.38	0.01	1182.38	1170.00	29	1182.38	1170.00
BT	29.01	1182.38	1182.38							
GR	1182.4	0	1170.00	0.01	1157.00	0.01	1157.00	14	1170.00	14
GR	1170.0	15	1157.00	15	1157.00	29	1170.00	29	1182.38	29.01
X1	179.50				50	50	50		-4.75	
X2							1			
X1	179.00				50	50	50		-4.75	
X2							1			
X1	178.50				50	50	50		-4.75	
X2							1			
X1	178.00				50	50	50		-4.75	
X2							1			
X1	176.00				200	200	200		-.25	
X2							1			
X1	174.00				200	200	200		-.25	
X2							1			
X1	172.00				200	200	200		-.25	
X2							1			
X1	170.00				200	200	200		-.25	
X2							1			
X1	169.00				100	100	100		-.13	
X2							1			

```
X1   168.50                                    50        50        50                  -4.5
X2                                                                  1

X1   168.00                                    50        50        50                  -4.5
X2                                                                  1

X1   167.50                                    50        50        50                  -4.5
X2                                                                  1

X1   167.00                                    50        50        50                  -4.5
X2                                                                  1

X1   166.50                                    50        50        50                  -4.5
X2                                                                  1

X1   166.00                                    50        50        50                  -4.5
X2                                                                  1

NC                                     .3      .5
                BEGIN 2-14'X13' RCBC
X1   165.83                                    17        17        17                  -1.47
X2                                                                  1

NC     .013      .013      .013
                END TUNNEL EXIT, BEGIN FIRST TRANSITION -DR. SONG'S STA. 90
X1   165.23        17      0.01        18        60        60        60
BT      17         0   1185.00   1185.00      0.01   1185.00   1112.00     0.055   1185.00   1113.00
BT   0.515   1185.00   1115.00     1.515   1185.00   1117.00     3.345   1185.00   1119.00     4.877
BT  1185.0   1120.00     6.042   1185.00   1120.50     9.000   1185.00   1121.00    11.958   1185.00
BT  1120.5    13.123   1185.00   1120.00    14.655   1185.00   1119.00    16.485   1185.00   1117.00
BT  17.485   1185.00   1115.00    17.945   1185.00   1113.00    18.000   1185.00   1112.00    18.001
BT  1185.0   1185.00
GR  1185.0         0    1112.0      0.01   1111.00      0.055   1109.00     0.515   1107.00     1.515
GR  1105.0     3.345    1104.0     4.877   1103.50     6.042   1103.00     9.000   1103.50    11.958
GR  1104.0    13.123    1105.0    14.655   1107.00    16.485   1109.00    17.485   1111.00    17.945
GR  1112.0    18.000    1185.0    18.001

NC                                     .1      .3
X1   162.23                                   300       300       300                   .33
X2                                                                  1
```

```
   SECNO    DEPTH    CWSEL    CRIWS    WSELK    EG       HV       HL       OLOSS   BANK ELEV
   Q        QLOB     QCH      QROB     ALOB     ACH      AROB     VOL      TWA   LEFT/RIGHT
   TIME     VLOB     VCH      VROB     XNL      XNCH     XNR      WTN      ELMIN      SSTA
   SLOPE    XLOBL    XLCH     XLOBR    ITRIAL   IDC      ICONT    CORAR    TOPWID     ENDST


*PROF 1

CRITICAL DEPTH TO BE CALCULATED AT ALL CROSS SECTIONS
ALLOWABLE ERROR FOR CRITICAL DEPTH DETERMINATION (ALLDC) =   .100 PERCENT OF THE DEPTH
0

CCHV=     .100 CEHV=     .300
*SECNO 204.750
                BEGIN ENERGY DISSIPATOR - WEIR AT THE RIVER
   204.75    14.12  1172.12  1163.71  1172.12  1172.59      .47      .00      .00  1175.00
    2331.       0.    2331.       0.       0.     424.       0.       0.       0.  1175.00
      .00      .00     5.50      .00     .000     .015     .000     .000  1158.00      .00
  .000219       0.       0.       0.        0       20        0      .00    30.00    30.00


*SECNO 204.740
   204.74    16.09  1172.24  1161.86      .00  1172.60      .36      .00      .01  1173.15
    2331.       0.    2331.       0.       0.     483.       0.       0.       0.  1173.15
      .00      .00     4.83      .00     .000     .015     .000     .000  1156.15      .00
  .000155       1.       1.       1.        2       21        0      .00    30.00    30.00


*SECNO 203.750
                BEGIN APPROACH CHANNEL
   203.75    16.07  1172.25  1161.89      .00  1172.62      .36      .02      .00  1173.18
    2331.       0.    2331.       0.       0.     482.       0.       1.       0.  1173.18
      .01      .00     4.83      .00     .000     .015     .000     .000  1156.18      .00
  .000155      99.      99.      99.        0       26        0      .00    30.00    30.00


*SECNO 203.660
   203.66    16.06  1172.24  1162.02      .00  1172.63      .39      .00      .01  1175.00
    2331.       0.    2331.       0.       0.     466.       0.       1.       0.  1175.00
      .01      .00     5.00      .00     .000     .015     .000     .000  1156.18      .00
  .000170       9.       9.       9.        1       22        0      .00    29.00    29.00


*SECNO 203.650

3302 WARNING:  CONVEYANCE CHANGE OUTSIDE OF ACCEPTABLE RANGE
```

SECNO	DEPTH	CWSEL	CRIWS	WSELK	EG	HV	HL	OLOSS	BANK ELEV
Q	QLOB	QCH	QROB	ALOB	ACH	AROB	VOL	TWA	LEFT/RIGHT
TIME	VLOB	VCH	VROB	XNL	XNCH	XNR	WTN	ELMIN	SSTA
SLOPE	XLOBL	XLCH	XLOBR	ITRIAL	IDC	ICONT	CORAR	TOPWID	ENDST

3370 NORMAL BRIDGE, NRD= 4 MIN ELTRD= 1180.00 MAX ELLC= 1169.18

BEGIN SECOND TRANSITION - FROM BOX CULVERT TO RECT. CHANNEL

203.65	15.88	1172.06	1162.17	.00	1172.70	.64	.00	.07	1169.18
2331.	0.	2331.	0.	0.	364.	0.	1.	0.	1169.18
.01	.00	6.41	.00	.000	.015	.000	.000	1156.18	.01
.000828	1.	1.	1.	2	17	0	-83.60	29.00	29.00

*SECNO 203.000

3370 NORMAL BRIDGE, NRD= 4 MIN ELTRD= 1180.00 MAX ELLC= 1169.21

203.00	15.91	1172.12	1162.20	.00	1172.75	.64	.05	.00	1169.21
2331.	0.	2331.	0.	0.	364.	0.	2.	0.	1169.21
.01	.00	6.41	.00	.000	.015	.000	.000	1156.21	.01
.000828	65.	65.	65.	2	17	0	-84.29	29.00	29.00

*SECNO 200.000

3370 NORMAL BRIDGE, NRD= 4 MIN ELTRD= 1180.00 MAX ELLC= 1169.31

200.00	16.06	1172.37	1162.30	.00	1173.00	.64	.25	.00	1169.31
2331.	0.	2331.	0.	0.	364.	0.	4.	0.	1169.31
.02	.00	6.41	.00	.000	.015	.000	.000	1156.31	.01
.000828	300.	300.	300.	0	17	0	-88.59	29.00	29.00

*SECNO 197.000

3370 NORMAL BRIDGE, NRD= 4 MIN ELTRD= 1180.00 MAX ELLC= 1169.41

197.00	16.20	1172.61	1162.40	.00	1173.25	.64	.25	.00	1169.41
2331.	0.	2331.	0.	0.	364.	0.	7.	1.	1169.41
.04	.00	6.41	.00	.000	.015	.000	.000	1156.41	.01
.000828	300.	300.	300.	0	17	0	-92.89	29.00	29.00

*SECNO 194.000

SECNO	DEPTH	CWSEL	CRIWS	WSELK	EG	HV	HL	OLOSS	BANK ELEV
Q	QLOB	QCH	QROB	ALOB	ACH	AROB	VOL	TWA	LEFT/RIGHT
TIME	VLOB	VCH	VROB	XNL	XNCH	XNR	WTN	ELMIN	SSTA
SLOPE	XLOBL	XLCH	XLOBR	ITRIAL	IDC	ICONT	CORAR	TOPWID	ENDST

3370 NORMAL BRIDGE, NRD= 4 MIN ELTRD= 1180.00 MAX ELLC= 1169.51

194.00	16.35	1172.86	1162.50	.00	1173.50	.64	.25	.00	1169.51
2331.	0.	2331.	0.	0.	364.	0.	9.	1.	1169.51
.05	.00	6.41	.00	.000	.015	.000	.000	1156.51	.01
.000828	300.	300.	300.	0	17	0	-97.19	29.00	29.00

*SECNO 191.000

3370 NORMAL BRIDGE, NRD= 4 MIN ELTRD= 1180.00 MAX ELLC= 1169.62

191.00	16.49	1173.11	1162.61	.00	1173.75	.64	.25	.00	1169.62
2331.	0.	2331.	0.	0.	364.	0.	12.	1.	1169.62
.06	.00	6.41	.00	.000	.015	.000	.000	1156.62	.01
.000828	300.	300.	300.	0	17	0	-101.20	29.00	29.00

*SECNO 188.000

3370 NORMAL BRIDGE, NRD= 4 MIN ELTRD= 1180.00 MAX ELLC= 1169.72

188.00	16.64	1173.36	1162.71	.00	1174.00	.64	.25	.00	1169.72
2331.	0.	2331.	0.	0.	364.	0.	14.	1.	1169.72
.07	.00	6.41	.00	.000	.015	.000	.000	1156.72	.01
.000828	300.	300.	300.	0	17	0	-105.50	29.00	29.00

*SECNO 185.000

3370 NORMAL BRIDGE, NRD= 4 MIN ELTRD= 1180.00 MAX ELLC= 1169.82

185.00	16.80	1173.62	1162.75	.00	1174.24	.62	.25	.00	1169.82
2305.	0.	2305.	0.	0.	364.	0.	17.	1.	1169.82
.09	.00	6.33	.00	.000	.015	.000	.000	1156.82	.01
.000809	300.	300.	300.	1	15	0	-109.98	29.00	29.00

*SECNO 182.000

3370 NORMAL BRIDGE, NRD= 4 MIN ELTRD= 1180.00 MAX ELLC= 1169.93

```
  SECNO    DEPTH    CWSEL    CRIWS    WSELK    EG       HV       HL       OLOSS    BANK ELEV
  Q        QLOB     QCH      QROB     ALOB     ACH      AROB     VOL      TWA    LEFT/RIGHT
  TIME     VLOB     VCH      VROB     XNL      XNCH     XNR      WTN      ELMIN      SSTA
  SLOPE    XLOBL    XLCH     XLOBR    ITRIAL   IDC      ICONT    CORAR    TOPWID     ENDST


  182.00    16.93  1173.86  1162.86      .00  1174.49      .62      .24      .00  1169.93
   2305.       0.    2305.       0.       0.     364.       0.      19.       2.   1169.93
     .10      .00     6.33      .00     .000     .015     .000     .000  1156.93      .01
 .000809     300.     300.     300.        0       15        0  -114.10    29.00    29.00


*SECNO 180.000

3370 NORMAL BRIDGE, NRD=   4 MIN ELTRD=  1182.38 MAX ELLC=  1170.00

  180.00    17.04  1174.04  1162.89      .00  1174.65      .61      .16      .00  1170.00
   2279.       0.    2279.       0.       0.     364.       0.      21.       2.   1170.00
     .11      .00     6.26      .00     .000     .015     .000     .000  1157.00      .01
 .000791     200.     200.     200.        1       15        0  -116.89    29.00    29.00


*SECNO 179.500

3370 NORMAL BRIDGE, NRD=   4 MIN ELTRD=  1182.38 MAX ELLC=  1165.25

  179.50    21.83  1174.08  1158.14      .00  1174.69      .61      .04      .00  1165.25
   2279.       0.    2279.       0.       0.     364.       0.      21.       2.   1165.25
     .11      .00     6.26      .00     .000     .015     .000     .000  1152.25      .00
 .000791      50.      50.      50.        0       15        0  -255.99    29.00    29.01


*SECNO 179.000
3280 CROSS SECTION    179.00 EXTENDED      1.24 FEET


3370 NORMAL BRIDGE, NRD=   4 MIN ELTRD=  1182.38 MAX ELLC=  1160.50

  179.00    26.62  1174.12  1153.39      .00  1174.73      .61      .04      .00  1160.50
   2279.       0.    2279.       0.       0.     364.       0.      22.       2.   1160.50
     .11      .00     6.26      .00     .000     .015     .000     .000  1147.50      .00
 .000791      50.      50.      50.        0       15        0  -394.91    29.01    29.01


*SECNO 178.500
3280 CROSS SECTION    178.50 EXTENDED      6.03 FEET
```

```
   SECNO    DEPTH    CWSEL    CRIWS    WSELK    EG       HV       HL       OLOSS    BANK ELEV
   Q        QLOB     QCH      QROB     ALOB     ACH      AROB     VOL      TWA    LEFT/RIGHT
   TIME     VLOB     VCH      VROB     XNL      XNCH     XNR      WTN      ELMIN      SSTA
   SLOPE    XLOBL    XLCH     XLOBR    ITRIAL   IDC      ICONT    CORAR    TOPWID     ENDST


3370 NORMAL BRIDGE, NRD=   4 MIN ELTRD=  1182.38 MAX ELLC=  1155.75

   178.50    31.41  1174.16  1148.64      .00  1174.77      .61      .04      .00  1155.75
    2279.       0.    2279.       0.       0.     364.       0.      22.       2.   1155.75
      .12      .00     6.26      .00     .000     .015     .000     .000  1142.75      .00
  .000791      50.      50.      50.        0       15        0  -533.86    29.01    29.01


*SECNO 178.000
3280 CROSS SECTION    178.00 EXTENDED     10.82 FEET


3370 NORMAL BRIDGE, NRD=   4 MIN ELTRD=  1182.38 MAX ELLC=  1151.00

   178.00    36.20  1174.20  1143.89      .00  1174.81      .61      .04      .00  1151.00
    2279.       0.    2279.       0.       0.     364.       0.      23.       2.   1151.00
      .12      .00     6.26      .00     .000     .015     .000     .000  1138.00      .00
  .000791      50.      50.      50.        0       15        0  -672.82    29.01    29.01


*SECNO 176.000
3280 CROSS SECTION    176.00 EXTENDED     11.22 FEET


3370 NORMAL BRIDGE, NRD=   4 MIN ELTRD=  1182.38 MAX ELLC=  1150.75

   176.00    36.60  1174.35  1143.64      .00  1174.96      .61      .16      .00  1150.75
    2279.       0.    2279.       0.       0.     364.       0.      24.       2.   1150.75
      .13      .00     6.26      .00     .000     .015     .000     .000  1137.75      .00
  .000791     200.     200.     200.        0       15        0  -684.66    29.01    29.01


*SECNO 174.000
3280 CROSS SECTION    174.00 EXTENDED     11.63 FEET


3370 NORMAL BRIDGE, NRD=   4 MIN ELTRD=  1182.38 MAX ELLC=  1150.50

   174.00    37.01  1174.51  1143.39      .00  1175.12      .61      .16      .00  1150.50
    2279.       0.    2279.       0.       0.     364.       0.      26.       2.   1150.50
      .14      .00     6.26      .00     .000     .015     .000     .000  1137.50      .00
  .000791     200.     200.     200.        0       15        0  -696.50    29.01    29.01
```

```
   SECNO    DEPTH    CWSEL    CRIWS    WSELK    EG       HV       HL       OLOSS   BANK ELEV
   Q        QLOB     QCH      QROB     ALOB     ACH      AROB     VOL      TWA   LEFT/RIGHT
   TIME     VLOB     VCH      VROB     XNL      XNCH     XNR      WTN      ELMIN      SSTA
   SLOPE    XLOBL    XLCH     XLOBR    ITRIAL   IDC      ICONT    CORAR    TOPWID     ENDST


*SECNO 172.000
3280 CROSS SECTION    172.00 EXTENDED     12.04 FEET


3370 NORMAL BRIDGE, NRD=   4 MIN ELTRD=  1182.38 MAX ELLC=  1150.25

   172.00    37.42  1174.67  1143.14      .00  1175.28      .61      .16      .00  1150.25
    2279.       0.    2279.       0.       0.     364.       0.      28.       2.  1150.25
      .14      .00     6.26      .00     .000     .015     .000     .000  1137.25      .00
  .000791     200.     200.     200.        0       15        0  -708.34    29.01    29.01


*SECNO 170.000
3280 CROSS SECTION    170.00 EXTENDED     12.45 FEET


3370 NORMAL BRIDGE, NRD=   4 MIN ELTRD=  1182.38 MAX ELLC=  1150.00

   170.00    37.83  1174.83  1142.89      .00  1175.44      .61      .16      .00  1150.00
    2279.       0.    2279.       0.       0.     364.       0.      29.       2.  1150.00
      .15      .00     6.26      .00     .000     .015     .000     .000  1137.00      .00
  .000791     200.     200.     200.        0       15        0  -720.19    29.01    29.01


*SECNO 169.000
3280 CROSS SECTION    169.00 EXTENDED     12.66 FEET


3370 NORMAL BRIDGE, NRD=   4 MIN ELTRD=  1182.38 MAX ELLC=  1149.87

   169.00    38.04  1174.91  1142.76      .00  1175.52      .61      .08      .00  1149.87
    2279.       0.    2279.       0.       0.     364.       0.      30.       2.  1149.87
      .16      .00     6.26      .00     .000     .015     .000     .000  1136.87      .00
  .000791     100.     100.     100.        0       15        0  -726.25    29.01    29.01


*SECNO 168.500
3280 CROSS SECTION    168.50 EXTENDED     17.20 FEET


3370 NORMAL BRIDGE, NRD=   4 MIN ELTRD=  1182.38 MAX ELLC=  1145.37

   168.50    42.58  1174.95  1138.26      .00  1175.56      .61      .04      .00  1145.37
    2279.       0.    2279.       0.       0.     364.       0.      31.       2.  1145.37
      .16      .00     6.26      .00     .000     .015     .000     .000  1132.37      .00
  .000791      50.      50.      50.        0       15        0  -857.96    29.01    29.01
```

```
  SECNO    DEPTH    CWSEL    CRIWS    WSELK    EG       HV       HL       OLOSS   BANK ELEV
  Q        QLOB     QCH      QROB     ALOB     ACH      AROB     VOL      TWA   LEFT/RIGHT
  TIME     VLOB     VCH      VROB     XNL      XNCH     XNR      WTN      ELMIN      SSTA
  SLOPE    XLOBL    XLCH     XLOBR    ITRIAL   IDC      ICONT    CORAR    TOPWID     ENDST


*SECNO 168.000
3280 CROSS SECTION    168.00 EXTENDED     21.74 FEET


3370 NORMAL BRIDGE, NRD=   4 MIN ELTRD=  1182.38 MAX ELLC=  1140.87

  168.00    47.12  1174.99  1133.76      .00  1175.60      .61      .04      .00  1140.87
   2279.       0.   2279.       0.       0.     364.       0.      31.       2.  1140.87
     .16      .00     6.26      .00     .000     .015     .000     .000  1127.87      .00
 .000791      50.      50.      50.        0       15        0  -989.67    29.01    29.01


*SECNO 167.500
3280 CROSS SECTION    167.50 EXTENDED     26.28 FEET


3370 NORMAL BRIDGE, NRD=   4 MIN ELTRD=  1182.38 MAX ELLC=  1136.37

  167.50    51.66  1175.03  1129.26      .00  1175.64      .61      .04      .00  1136.37
   2279.       0.   2279.       0.       0.     364.       0.      31.       2.  1136.37
     .16      .00     6.26      .00     .000     .015     .000     .000  1123.37      .00
 .000791      50.      50.      50.        0       15        0 -1121.38    29.02    29.02


*SECNO 167.000
3280 CROSS SECTION    167.00 EXTENDED     30.82 FEET


3370 NORMAL BRIDGE, NRD=   4 MIN ELTRD=  1182.38 MAX ELLC=  1131.87

  167.00    56.20  1175.07  1124.76      .00  1175.68      .61      .04      .00  1131.87
   2279.       0.   2279.       0.       0.     364.       0.      32.       3.  1131.87
     .17      .00     6.26      .00     .000     .015     .000     .000  1118.87      .00
 .000791      50.      50.      50.        0       15        0 -1253.10    29.02    29.02


*SECNO 166.500
3280 CROSS SECTION    166.50 EXTENDED     35.36 FEET


3370 NORMAL BRIDGE, NRD=   4 MIN ELTRD=  1182.38 MAX ELLC=  1127.37

  166.50    60.74  1175.11  1120.26      .00  1175.72      .61      .04      .00  1127.37
   2279.       0.   2279.       0.       0.     364.       0.      32.       3.  1127.37
     .17      .00     6.26      .00     .000     .015     .000     .000  1114.37      .00
 .000791      50.      50.      50.        0       15        0 -1384.82    29.02    29.02
```

```
  SECNO    DEPTH    CWSEL    CRIWS    WSELK    EG       HV       HL       OLOSS   BANK ELEV
  Q        QLOB     QCH      QROB     ALOB     ACH      AROB     VOL      TWA   LEFT/RIGHT
  TIME     VLOB     VCH      VROB     XNL      XNCH     XNR      WTN      ELMIN      SSTA
  SLOPE    XLOBL    XLCH     XLOBR    ITRIAL   IDC      ICONT    CORAR    TOPWID     ENDST


*SECNO 166.000
3280 CROSS SECTION    166.00 EXTENDED     39.90 FEET


3370 NORMAL BRIDGE, NRD=   4 MIN ELTRD=  1182.38 MAX ELLC=  1122.87

  166.00    65.28  1175.15  1115.76      .00  1175.75      .61      .04      .00  1122.87
   2279.       0.    2279.       0.       0.     364.       0.      33.       3.   1122.87
     .17      .00     6.26      .00     .000     .015     .000     .000  1109.87      .00
 .000791      50.      50.      50.        0       15        0 -1516.55    29.02    29.02


CCHV=     .300 CEHV=     .500
*SECNO 165.830
3280 CROSS SECTION    165.83 EXTENDED     41.38 FEET


3370 NORMAL BRIDGE, NRD=   4 MIN ELTRD=  1182.38 MAX ELLC=  1121.40

                BEGIN 2-14'X13' RCBC
  165.83    66.76  1175.16  1114.29      .00  1175.77      .61      .01      .00  1121.40
   2279.       0.    2279.       0.       0.     364.       0.      33.       3.   1121.40
     .17      .00     6.26      .00     .000     .015     .000     .000  1108.40      .00
 .000791      17.      17.      17.        0       15        0 -1559.60    29.02    29.02


*SECNO 165.230

3301 HV CHANGED MORE THAN HVINS


3370 NORMAL BRIDGE, NRD=  17 MIN ELTRD=  1185.00 MAX ELLC=  1121.00

                END TUNNEL EXIT, BEGIN FIRST TRANSITION -DR. SONG'S STA. 90
  165.23    71.88  1174.88  1112.90      .00  1176.15     1.27      .05      .33  1112.00
   2279.       0.    2279.       0.       0.     252.       0.      33.       3.   1112.00
     .17      .00     9.06      .00     .000     .013     .000     .000  1103.00      .00
 .000854      60.      60.      60.        2       24        0 -1005.62    18.00    18.00


CCHV=     .100 CEHV=     .300
*SECNO 162.230
```

SECNO	DEPTH	CWSEL	CRIWS	WSELK	EG	HV	HL	OLOSS	BANK ELEV
Q	QLOB	QCH	QROB	ALOB	ACH	AROB	VOL	TWA	LEFT/RIGHT
TIME	VLOB	VCH	VROB	XNL	XNCH	XNR	WTN	ELMIN	SSTA
SLOPE	XLOBL	XLCH	XLOBR	ITRIAL	IDC	ICONT	CORAR	TOPWID	ENDST

3370 NORMAL BRIDGE, NRD= 17 MIN ELTRD= 1185.00 MAX ELLC= 1121.33

162.23	71.80	1175.13	1113.23	.00	1176.41	1.27	.26	.00	1112.33
2279.	0.	2279.	0.	0.	252.	0.	35.	3.	1112.33
.18	.00	9.06	.00	.000	.013	.000	.000	1103.33	.00
.000854	300.	300.	300.	0	24	0	-1004.13	18.00	18.00

```
T1      PRICE ROAD DRAIN EXTENTION AND OUTFALL RESTUDY
T2      SUBCRITICAL RUN WITH 2-14'x13' BOX CULVERT TO RIVER -- ALT. 1
T3      100-YEAR DISCHARGE IN TUNNEL AND NO FLOW IN RIVER

J1  ICHECK    INQ      NINV     IDIR     STRT     METRIC   HVINS    Q        WSEL     FQ

              3                          -1

J2  NPROF     IPLOT    PRFVS    XSECV    XSECH    FN       ALLDC    IBW      CHNIM    ITRACE

     15                -1                          -.1
```

```
   SECNO    DEPTH    CWSEL    CRIWS    WSELK    EG       HV       HL       OLOSS   BANK ELEV
   Q        QLOB     QCH      QROB     ALOB     ACH      AROB     VOL      TWA   LEFT/RIGHT
   TIME     VLOB     VCH      VROB     XNL      XNCH     XNR      WTN      ELMIN      SSTA
   SLOPE    XLOBL    XLCH     XLOBR    ITRIAL   IDC      ICONT    CORAR    TOPWID     ENDST


*PROF 2

CRITICAL DEPTH TO BE CALCULATED AT ALL CROSS SECTIONS
ALLOWABLE ERROR FOR CRITICAL DEPTH DETERMINATION (ALLDC) =   .100 PERCENT OF THE DEPTH
0

CCHV=     .100 CEHV=     .300
*SECNO 204.750
2096 WSEL NOT GIVEN, AVG OF MAX, MIN USED
3720 CRITICAL DEPTH ASSUMED
                BEGIN ENERGY DISSIPATOR - WEIR AT THE RIVER
   204.75     5.71  1163.71  1163.71      .00  1166.59     2.88      .00      .00  1175.00
    2331.      0.    2331.      0.       0.     171.      0.       0.       0.   1175.00
      .00     .00    13.61     .00     .000     .015     .000     .000  1158.00      .00
  .002844      0.       0.      0.        0       16        0      .00    30.00    30.00


*SECNO 204.740

3301 HV CHANGED MORE THAN HVINS


3302 WARNING:  CONVEYANCE CHANGE OUTSIDE OF ACCEPTABLE RANGE

   204.74     9.61  1165.76  1161.86      .00  1166.77     1.02      .00      .19  1173.15
    2331.      0.    2331.      0.       0.     288.      0.       0.       0.   1173.15
      .00     .00     8.09     .00     .000     .015     .000     .000  1156.15      .00
  .000631      1.       1.      1.        4        5        0      .00    30.00    30.00


*SECNO 203.750
                BEGIN APPROACH CHANNEL
   203.75     9.65  1165.83  1161.90      .00  1166.84     1.01      .06      .00  1173.18
    2331.      0.    2331.      0.       0.     289.      0.       1.       0.   1173.18
      .00     .00     8.05     .00     .000     .015     .000     .000  1156.18      .00
  .000624     99.      99.     99.        2       19        0      .00    30.00    30.00


*SECNO 203.660
   203.66     9.60  1165.78  1162.03      .00  1166.87     1.09      .01      .02  1175.00
    2331.      0.    2331.      0.       0.     278.      0.       1.       0.   1175.00
      .00     .00     8.38     .00     .000     .015     .000     .000  1156.18      .00
  .000690      9.       9.      9.        2       19        0      .00    29.00    29.00
```

```
  SECNO    DEPTH    CWSEL    CRIWS    WSELK    EG       HV       HL       OLOSS   BANK ELEV
  Q        QLOB     QCH      QROB     ALOB     ACH      AROB     VOL      TWA   LEFT/RIGHT
  TIME     VLOB     VCH      VROB     XNL      XNCH     XNR      WTN      ELMIN      SSTA
  SLOPE    XLOBL    XLCH     XLOBR    ITRIAL   IDC      ICONT    CORAR    TOPWID     ENDST


*SECNO 203.650

3265 DIVIDED FLOW


3370 NORMAL BRIDGE, NRD=   4 MIN ELTRD=  1180.00 MAX ELLC=  1169.18

                BEGIN SECOND TRANSITION  - FROM BOX CULVERT TO RECT. CHANNEL
  203.65     9.53  1165.71  1162.17      .00  1166.90     1.19      .00      .03  1169.18
   2331.       0.    2331.       0.       0.     267.       0.       1.       0.   1169.18
     .00      .00     8.74      .00     .000     .015     .000     .000  1156.18      .01
 .001211       1.       1.       1.        2       17        0      .00    27.99    29.00


*SECNO 203.000

3265 DIVIDED FLOW


3370 NORMAL BRIDGE, NRD=   4 MIN ELTRD=  1180.00 MAX ELLC=  1169.21

  203.00     9.60  1165.81  1162.20      .00  1166.98     1.17      .08      .00  1169.21
   2331.       0.    2331.       0.       0.     269.       0.       1.       0.   1169.21
     .01      .00     8.68      .00     .000     .015     .000     .000  1156.21      .01
 .001190      65.      65.      65.        2       17        0      .00    27.99    29.00


*SECNO 200.000

3265 DIVIDED FLOW


3370 NORMAL BRIDGE, NRD=   4 MIN ELTRD=  1180.00 MAX ELLC=  1169.31

  200.00     9.92  1166.23  1162.30      .00  1167.33     1.09      .34      .01  1169.31
   2331.       0.    2331.       0.       0.     278.       0.       3.       0.   1169.31
     .02      .00     8.39      .00     .000     .015     .000     .000  1156.31      .01
 .001093     300.     300.     300.        2       17        0      .00    27.99    29.00


*SECNO 197.000
```

SECNO	DEPTH	CWSEL	CRIWS	WSELK	EG	HV	HL	OLOSS	BANK ELEV
Q	QLOB	QCH	QROB	ALOB	ACH	AROB	VOL	TWA	LEFT/RIGHT
TIME	VLOB	VCH	VROB	XNL	XNCH	XNR	WTN	ELMIN	SSTA
SLOPE	XLOBL	XLCH	XLOBR	ITRIAL	IDC	ICONT	CORAR	TOPWID	ENDST

3265 DIVIDED FLOW

3370 NORMAL BRIDGE, NRD= 4 MIN ELTRD= 1180.00 MAX ELLC= 1169.41

197.00	10.20	1166.61	1162.40	.00	1167.65	1.03	.32	.01	1169.41
2331.	0.	2331.	0.	0.	286.	0.	5.	1.	1169.41
.03	.00	8.16	.00	.000	.015	.000	.000	1156.41	.01
.001018	300.	300.	300.	2	17	0	.00	27.99	29.00

*SECNO 194.000

3265 DIVIDED FLOW

3370 NORMAL BRIDGE, NRD= 4 MIN ELTRD= 1180.00 MAX ELLC= 1169.51

194.00	10.45	1166.96	1162.50	.00	1167.95	.99	.30	.00	1169.51
2331.	0.	2331.	0.	0.	293.	0.	7.	1.	1169.51
.04	.00	7.97	.00	.000	.015	.000	.000	1156.51	.01
.000957	300.	300.	300.	2	17	0	.00	27.99	29.00

*SECNO 191.000

3265 DIVIDED FLOW

3370 NORMAL BRIDGE, NRD= 4 MIN ELTRD= 1180.00 MAX ELLC= 1169.62

191.00	10.67	1167.29	1162.61	.00	1168.23	.95	.28	.00	1169.62
2331.	0.	2331.	0.	0.	299.	0.	9.	1.	1169.62
.05	.00	7.81	.00	.000	.015	.000	.000	1156.62	.01
.000909	300.	300.	300.	2	17	0	.00	27.99	29.00

*SECNO 188.000

3265 DIVIDED FLOW

```
   SECNO     DEPTH     CWSEL     CRIWS     WSELK     EG        HV        HL        OLOSS    BANK ELEV
   Q         QLOB      QCH       QROB      ALOB      ACH       AROB      VOL       TWA    LEFT/RIGHT
   TIME      VLOB      VCH       VROB      XNL       XNCH      XNR       WTN       ELMIN       SSTA
   SLOPE     XLOBL     XLCH      XLOBR     ITRIAL    IDC       ICONT     CORAR     TOPWID      ENDST


3370 NORMAL BRIDGE, NRD=   4 MIN ELTRD=  1180.00 MAX ELLC=  1169.72

   188.00    10.87  1167.59  1162.71      .00  1168.50      .91      .27      .00  1169.72
    2331.       0.    2331.       0.       0.     304.       0.      11.       1.  1169.72
      .06      .00     7.66      .00     .000     .015     .000     .000  1156.72      .01
  .000867     300.     300.     300.        2       17        0      .00    27.99    29.00


*SECNO 185.000

3265 DIVIDED FLOW


3370 NORMAL BRIDGE, NRD=   4 MIN ELTRD=  1180.00 MAX ELLC=  1169.82

   185.00    11.08  1167.90  1162.75      .00  1168.76      .86      .25      .01  1169.82
    2305.       0.    2305.       0.       0.     310.       0.      13.       1.  1169.82
      .07      .00     7.43      .00     .000     .015     .000     .000  1156.82      .01
  .000808     300.     300.     300.        2       15        0      .00    27.99    29.00


*SECNO 182.000

3265 DIVIDED FLOW


3370 NORMAL BRIDGE, NRD=   4 MIN ELTRD=  1180.00 MAX ELLC=  1169.93

   182.00    11.23  1168.16  1162.86      .00  1169.00      .84      .24      .00  1169.93
    2305.       0.    2305.       0.       0.     314.       0.      15.       1.  1169.93
      .08      .00     7.34      .00     .000     .015     .000     .000  1156.93      .01
  .000781     300.     300.     300.        1       15        0      .00    27.99    29.00


*SECNO 180.000

3265 DIVIDED FLOW


3370 NORMAL BRIDGE, NRD=   4 MIN ELTRD=  1182.38 MAX ELLC=  1170.00

   180.00    11.36  1168.36  1162.89      .00  1169.15      .80      .15      .00  1170.00
    2279.       0.    2279.       0.       0.     318.       0.      17.       2.  1170.00
      .09      .00     7.17      .00     .000     .015     .000     .000  1157.00      .01
  .000742     200.     200.     200.        2       15        0      .00    27.99    29.00
```

```
   SECNO    DEPTH    CWSEL    CRIWS    WSELK    EG       HV       HL       OLOSS   BANK ELEV
   Q        QLOB     QCH      QROB     ALOB     ACH      AROB     VOL      TWA   LEFT/RIGHT
   TIME     VLOB     VCH      VROB     XNL      XNCH     XNR      WTN      ELMIN      SSTA
   SLOPE    XLOBL    XLCH     XLOBR    ITRIAL   IDC      ICONT    CORAR    TOPWID     ENDST


*SECNO 179.500

3370 NORMAL BRIDGE, NRD=   4 MIN ELTRD=  1182.38 MAX ELLC=  1165.25

   179.50    16.35  1168.60  1158.14      .00  1169.21      .61      .04      .02  1165.25
    2279.       0.    2279.       0.       0.     364.       0.      17.       2.  1165.25
      .09      .00     6.26      .00     .000     .015     .000     .000  1152.25      .01
  .000791      50.      50.      50.        2       15        0   -97.21    29.00    29.00


*SECNO 179.000

3370 NORMAL BRIDGE, NRD=   4 MIN ELTRD=  1182.38 MAX ELLC=  1160.50

   179.00    21.14  1168.64  1153.39      .00  1169.25      .61      .04      .00  1160.50
    2279.       0.    2279.       0.       0.     364.       0.      18.       2.  1160.50
      .09      .00     6.26      .00     .000     .015     .000     .000  1147.50      .00
  .000791      50.      50.      50.        0       15        0  -236.06    29.00    29.01


*SECNO 178.500
3280 CROSS SECTION    178.50 EXTENDED       .55 FEET


3370 NORMAL BRIDGE, NRD=   4 MIN ELTRD=  1182.38 MAX ELLC=  1155.75

   178.50    25.93  1168.68  1148.64      .00  1169.29      .61      .04      .00  1155.75
    2279.       0.    2279.       0.       0.     364.       0.      18.       2.  1155.75
      .09      .00     6.26      .00     .000     .015     .000     .000  1142.75      .00
  .000791      50.      50.      50.        0       15        0  -375.03    29.01    29.01


*SECNO 178.000
3280 CROSS SECTION    178.00 EXTENDED      5.34 FEET


3370 NORMAL BRIDGE, NRD=   4 MIN ELTRD=  1182.38 MAX ELLC=  1151.00

   178.00    30.72  1168.72  1143.89      .00  1169.33      .61      .04      .00  1151.00
    2279.       0.    2279.       0.       0.     364.       0.      18.       2.  1151.00
      .10      .00     6.26      .00     .000     .015     .000     .000  1138.00      .00
  .000791      50.      50.      50.        0       15        0  -513.98    29.01    29.01
```

```
SECNO    DEPTH    CWSEL    CRIWS    WSELK    EG       HV       HL       OLOSS    BANK ELEV
Q        QLOB     QCH      QROB     ALOB     ACH      AROB     VOL      TWA    LEFT/RIGHT
TIME     VLOB     VCH      VROB     XNL      XNCH     XNR      WTN      ELMIN      SSTA
SLOPE    XLOBL    XLCH     XLOBR    ITRIAL   IDC      ICONT    CORAR    TOPWID     ENDST


*SECNO 176.000
3280 CROSS SECTION    176.00 EXTENDED      5.75 FEET


3370 NORMAL BRIDGE, NRD=   4 MIN ELTRD=  1182.38 MAX ELLC=  1150.75

  176.00    31.13  1168.88  1143.64      .00  1169.49      .61      .16      .00  1150.75
   2279.       0.    2279.       0.       0.     364.       0.      20.       2.   1150.75
     .11      .00     6.26      .00     .000     .015     .000     .000  1137.75      .00
 .000791     200.     200.     200.        0       15        0  -525.82    29.01    29.01


*SECNO 174.000
3280 CROSS SECTION    174.00 EXTENDED      6.16 FEET


3370 NORMAL BRIDGE, NRD=   4 MIN ELTRD=  1182.38 MAX ELLC=  1150.50

  174.00    31.54  1169.04  1143.39      .00  1169.65      .61      .16      .00  1150.50
   2279.       0.    2279.       0.       0.     364.       0.      22.       2.   1150.50
     .11      .00     6.26      .00     .000     .015     .000     .000  1137.50      .00
 .000791     200.     200.     200.        0       15        0  -537.66    29.01    29.01


*SECNO 172.000
3280 CROSS SECTION    172.00 EXTENDED      6.57 FEET


3370 NORMAL BRIDGE, NRD=   4 MIN ELTRD=  1182.38 MAX ELLC=  1150.25

  172.00    31.95  1169.20  1143.14      .00  1169.81      .61      .16      .00  1150.25
   2279.       0.    2279.       0.       0.     364.       0.      23.       2.   1150.25
     .12      .00     6.26      .00     .000     .015     .000     .000  1137.25      .00
 .000791     200.     200.     200.        0       15        0  -549.51    29.01    29.01


*SECNO 170.000
3280 CROSS SECTION    170.00 EXTENDED      6.97 FEET


3370 NORMAL BRIDGE, NRD=   4 MIN ELTRD=  1182.38 MAX ELLC=  1150.00

  170.00    32.35  1169.35  1142.89      .00  1169.96      .61      .16      .00  1150.00
   2279.       0.    2279.       0.       0.     364.       0.      25.       2.   1150.00
     .13      .00     6.26      .00     .000     .015     .000     .000  1137.00      .00
 .000791     200.     200.     200.        0       15        0  -561.35    29.01    29.01
```

```
   SECNO    DEPTH    CWSEL    CRIWS    WSELK    EG       HV       HL       OLOSS   BANK ELEV
   Q        QLOB     QCH      QROB     ALOB     ACH      AROB     VOL      TWA   LEFT/RIGHT
   TIME     VLOB     VCH      VROB     XNL      XNCH     XNR      WTN      ELMIN      SSTA
   SLOPE    XLOBL    XLCH     XLOBR    ITRIAL   IDC      ICONT    CORAR    TOPWID     ENDST


*SECNO 169.000
3280 CROSS SECTION    169.00 EXTENDED      7.18 FEET


3370 NORMAL BRIDGE, NRD=   4 MIN ELTRD=  1182.38 MAX ELLC=  1149.87

   169.00    32.56  1169.43  1142.76      .00  1170.04      .61      .08      .00  1149.87
    2279.       0.    2279.       0.       0.     364.       0.      26.       2.   1149.87
      .14      .00     6.26      .00     .000     .015     .000     .000  1136.87      .00
  .000791     100.     100.     100.        0       15        0  -567.41    29.01    29.01


*SECNO 168.500
3280 CROSS SECTION    168.50 EXTENDED     11.72 FEET


3370 NORMAL BRIDGE, NRD=   4 MIN ELTRD=  1182.38 MAX ELLC=  1145.37

   168.50    37.10  1169.47  1138.26      .00  1170.08      .61      .04      .00  1145.37
    2279.       0.    2279.       0.       0.     364.       0.      26.       2.   1145.37
      .14      .00     6.26      .00     .000     .015     .000     .000  1132.37      .00
  .000791      50.      50.      50.        0       15        0  -699.12    29.01    29.01


*SECNO 168.000
3280 CROSS SECTION    168.00 EXTENDED     16.26 FEET


3370 NORMAL BRIDGE, NRD=   4 MIN ELTRD=  1182.38 MAX ELLC=  1140.87

   168.00    41.64  1169.51  1133.76      .00  1170.12      .61      .04      .00  1140.87
    2279.       0.    2279.       0.       0.     364.       0.      27.       2.   1140.87
      .14      .00     6.26      .00     .000     .015     .000     .000  1127.87      .00
  .000791      50.      50.      50.        0       15        0  -830.82    29.01    29.01


*SECNO 167.500
3280 CROSS SECTION    167.50 EXTENDED     20.80 FEET


3370 NORMAL BRIDGE, NRD=   4 MIN ELTRD=  1182.38 MAX ELLC=  1136.37

   167.50    46.18  1169.55  1129.26      .00  1170.16      .61      .04      .00  1136.37
    2279.       0.    2279.       0.       0.     364.       0.      27.       2.   1136.37
      .14      .00     6.26      .00     .000     .015     .000     .000  1123.37      .00
  .000791      50.      50.      50.        0       15        0  -962.53    29.01    29.01
```

```
  SECNO    DEPTH    CWSEL    CRIWS    WSELK    EG       HV       HL       OLOSS   BANK ELEV
  Q        QLOB     QCH      QROB     ALOB     ACH      AROB     VOL      TWA   LEFT/RIGHT
  TIME     VLOB     VCH      VROB     XNL      XNCH     XNR      WTN      ELMIN      SSTA
  SLOPE    XLOBL    XLCH     XLOBR    ITRIAL   IDC      ICONT    CORAR    TOPWID     ENDST


*SECNO 167.000
3280 CROSS SECTION    167.00 EXTENDED     25.34 FEET


3370 NORMAL BRIDGE, NRD=   4 MIN ELTRD=  1182.38 MAX ELLC=  1131.87

  167.00    50.72  1169.59  1124.76      .00  1170.20      .61      .04      .00  1131.87
   2279.       0.    2279.       0.       0.     364.       0.      28.       2.   1131.87
     .15      .00     6.26      .00     .000     .015     .000     .000  1118.87      .00
 .000791      50.      50.      50.       0       15        0 -1094.24    29.02    29.02


*SECNO 166.500
3280 CROSS SECTION    166.50 EXTENDED     29.88 FEET


3370 NORMAL BRIDGE, NRD=   4 MIN ELTRD=  1182.38 MAX ELLC=  1127.37

  166.50    55.26  1169.63  1120.26      .00  1170.24      .61      .04      .00  1127.37
   2279.       0.    2279.       0.       0.     364.       0.      28.       2.   1127.37
     .15      .00     6.26      .00     .000     .015     .000     .000  1114.37      .00
 .000791      50.      50.      50.       0       15        0 -1225.96    29.02    29.02


*SECNO 166.000
3280 CROSS SECTION    166.00 EXTENDED     34.42 FEET


3370 NORMAL BRIDGE, NRD=   4 MIN ELTRD=  1182.38 MAX ELLC=  1122.87

  166.00    59.80  1169.67  1115.76      .00  1170.28      .61      .04      .00  1122.87
   2279.       0.    2279.       0.       0.     364.       0.      28.       3.   1122.87
     .15      .00     6.26      .00     .000     .015     .000     .000  1109.87      .00
 .000791      50.      50.      50.       0       15        0 -1357.68    29.02    29.02


CCHV=     .300 CEHV=     .500
*SECNO 165.830
3280 CROSS SECTION    165.83 EXTENDED     35.90 FEET


3370 NORMAL BRIDGE, NRD=   4 MIN ELTRD=  1182.38 MAX ELLC=  1121.40
```

```
                BEGIN 2-14'X13' RCBC
  165.83    61.28  1169.68  1114.29      .00  1170.29      .61      .01      .00  1121.40
   2279.       0.    2279.       0.       0.     364.       0.      29.       3.   1121.40
     .15      .00     6.26      .00     .000     .015     .000     .000  1108.40      .00
 .000791      17.      17.      17.        0       15        0 -1400.73    29.02    29.02


*SECNO 165.230

3301 HV CHANGED MORE THAN HVINS


3370 NORMAL BRIDGE, NRD=  17 MIN ELTRD=  1185.00 MAX ELLC=  1121.00

                END TUNNEL EXIT, BEGIN FIRST TRANSITION -DR. SONG'S STA. 90
  165.23    66.40  1169.40  1112.90      .00  1170.67     1.27      .05      .33  1112.00
   2279.       0.    2279.       0.       0.     252.       0.      29.       3.   1112.00
     .15      .00     9.06      .00     .000     .013     .000     .000  1103.00      .00
 .000854      60.      60.      60.        2       24        0  -907.08    18.00    18.00


CCHV=     .100 CEHV=     .300
*SECNO 162.230

3370 NORMAL BRIDGE, NRD=  17 MIN ELTRD=  1185.00 MAX ELLC=  1121.33

  162.23    66.33  1169.66  1113.23      .00  1170.93     1.27      .26      .00  1112.33
   2279.       0.    2279.       0.       0.     252.       0.      31.       3.   1112.33
     .16      .00     9.06      .00     .000     .013     .000     .000  1103.33      .00
 .000854     300.     300.     300.        0       24        0  -905.58    18.00    18.00
```

THIS RUN EXECUTED 7/26/89 17: 2:34

****
HEC2 RELEASE DATED SEPT 88

****

NOTE- ASTERISK (*) AT LEFT OF CROSS-SECTION NUMBER INDICATES MESSAGE IN SUMMARY OF ERRORS LIST

100-YEAR DISCHARGE IN TU

SUMMARY PRINTOUT TABLE 150

	SECNO	XLCH	ELTRD	ELLC	ELMIN	Q	CWSEL	CRIWS	EG	10*KS	VCH	AREA	.01K
	204.750	.00	.00	.00	1158.00	2331.00	1172.12	1163.71	1172.59	2.19	5.50	423.60	1575.44
*	204.750	.00	.00	.00	1158.00	2331.00	1163.71	1163.71	1166.59	28.44	13.61	171.25	437.07
	204.740	1.00	.00	.00	1156.15	2331.00	1172.24	1161.86	1172.60	1.55	4.83	482.67	1874.78
*	204.740	1.00	.00	.00	1156.15	2331.00	1165.76	1161.86	1166.77	6.31	8.09	288.19	927.63
	203.750	99.00	.00	.00	1156.18	2331.00	1172.25	1161.89	1172.62	1.55	4.83	482.32	1872.99
	203.750	99.00	.00	.00	1156.18	2331.00	1165.83	1161.90	1166.84	6.24	8.05	289.46	933.38
	203.660	9.00	.00	.00	1156.18	2331.00	1172.24	1162.02	1172.63	1.70	5.00	465.93	1787.75
	203.660	9.00	.00	.00	1156.18	2331.00	1165.78	1162.03	1166.87	6.90	8.38	278.31	887.50
*	203.650	1.00	1180.00	1169.18	1156.18	2331.00	1172.06	1162.17	1172.70	8.28	6.41	363.87	810.26
	203.650	1.00	1180.00	1169.18	1156.18	2331.00	1165.71	1162.17	1166.90	12.11	8.74	266.75	669.78
	203.000	65.00	1180.00	1169.21	1156.21	2331.00	1172.12	1162.20	1172.75	8.28	6.41	363.87	810.26
	203.000	65.00	1180.00	1169.21	1156.21	2331.00	1165.81	1162.20	1166.98	11.90	8.68	268.58	675.70
	200.000	300.00	1180.00	1169.31	1156.31	2331.00	1172.37	1162.30	1173.00	8.28	6.41	363.87	810.26
	200.000	300.00	1180.00	1169.31	1156.31	2331.00	1166.23	1162.30	1167.33	10.93	8.39	277.70	705.17
	197.000	300.00	1180.00	1169.41	1156.41	2331.00	1172.61	1162.40	1173.25	8.28	6.41	363.87	810.26
	197.000	300.00	1180.00	1169.41	1156.41	2331.00	1166.61	1162.40	1167.65	10.18	8.16	285.58	730.72
	194.000	300.00	1180.00	1169.51	1156.51	2331.00	1172.86	1162.50	1173.50	8.28	6.41	363.87	810.26
	194.000	300.00	1180.00	1169.51	1156.51	2331.00	1166.96	1162.50	1167.95	9.57	7.97	292.58	753.55
	191.000	300.00	1180.00	1169.62	1156.62	2331.00	1173.11	1162.61	1173.75	8.28	6.41	363.87	810.26
	191.000	300.00	1180.00	1169.62	1156.62	2331.00	1167.29	1162.61	1168.23	9.09	7.81	298.52	772.96
	188.000	300.00	1180.00	1169.72	1156.72	2331.00	1173.36	1162.71	1174.00	8.28	6.41	363.87	810.26
	188.000	300.00	1180.00	1169.72	1156.72	2331.00	1167.59	1162.71	1168.50	8.67	7.66	304.26	791.78

SECNO	XLCH	ELTRD	ELLC	ELMIN	Q	CWSEL	CRIWS	EG	10*KS	VCH	AREA	.01K
185.000	300.00	1180.00	1169.82	1156.82	2305.00	1173.62	1162.75	1174.24	8.09	6.33	363.87	810.26
185.000	300.00	1180.00	1169.82	1156.82	2305.00	1167.90	1162.75	1168.76	8.08	7.43	310.15	811.13
182.000	300.00	1180.00	1169.93	1156.93	2305.00	1173.86	1162.86	1174.49	8.09	6.33	363.87	810.26
182.000	300.00	1180.00	1169.93	1156.93	2305.00	1168.16	1162.86	1169.00	7.81	7.34	314.25	824.62
180.000	200.00	1182.38	1170.00	1157.00	2279.00	1174.04	1162.89	1174.65	7.91	6.26	363.87	810.26
180.000	200.00	1182.38	1170.00	1157.00	2279.00	1168.36	1162.89	1169.15	7.42	7.17	317.88	836.60
179.500	50.00	1182.38	1165.25	1152.25	2279.00	1174.08	1158.14	1174.69	7.91	6.26	363.87	810.26
179.500	50.00	1182.38	1165.25	1152.25	2279.00	1168.60	1158.14	1169.21	7.91	6.26	363.87	810.26
179.000	50.00	1182.38	1160.50	1147.50	2279.00	1174.12	1153.39	1174.73	7.91	6.26	363.87	810.26
179.000	50.00	1182.38	1160.50	1147.50	2279.00	1168.64	1153.39	1169.25	7.91	6.26	363.87	810.26
178.500	50.00	1182.38	1155.75	1142.75	2279.00	1174.16	1148.64	1174.77	7.91	6.26	363.87	810.26
178.500	50.00	1182.38	1155.75	1142.75	2279.00	1168.68	1148.64	1169.29	7.91	6.26	363.87	810.26
178.000	50.00	1182.38	1151.00	1138.00	2279.00	1174.20	1143.89	1174.81	7.91	6.26	363.87	810.26
178.000	50.00	1182.38	1151.00	1138.00	2279.00	1168.72	1143.89	1169.33	7.91	6.26	363.87	810.26
176.000	200.00	1182.38	1150.75	1137.75	2279.00	1174.35	1143.64	1174.96	7.91	6.26	363.87	810.26
176.000	200.00	1182.38	1150.75	1137.75	2279.00	1168.88	1143.64	1169.49	7.91	6.26	363.87	810.26
174.000	200.00	1182.38	1150.50	1137.50	2279.00	1174.51	1143.39	1175.12	7.91	6.26	363.87	810.26
174.000	200.00	1182.38	1150.50	1137.50	2279.00	1169.04	1143.39	1169.65	7.91	6.26	363.87	810.26
172.000	200.00	1182.38	1150.25	1137.25	2279.00	1174.67	1143.14	1175.28	7.91	6.26	363.87	810.26
172.000	200.00	1182.38	1150.25	1137.25	2279.00	1169.20	1143.14	1169.81	7.91	6.26	363.87	810.26
170.000	200.00	1182.38	1150.00	1137.00	2279.00	1174.83	1142.89	1175.44	7.91	6.26	363.87	810.26
170.000	200.00	1182.38	1150.00	1137.00	2279.00	1169.35	1142.89	1169.96	7.91	6.26	363.87	810.26
169.000	100.00	1182.38	1149.87	1136.87	2279.00	1174.91	1142.76	1175.52	7.91	6.26	363.87	810.26
169.000	100.00	1182.38	1149.87	1136.87	2279.00	1169.43	1142.76	1170.04	7.91	6.26	363.87	810.26
168.500	50.00	1182.38	1145.37	1132.37	2279.00	1174.95	1138.26	1175.56	7.91	6.26	363.87	810.26
168.500	50.00	1182.38	1145.37	1132.37	2279.00	1169.47	1138.26	1170.08	7.91	6.26	363.87	810.26
168.000	50.00	1182.38	1140.87	1127.87	2279.00	1174.99	1133.76	1175.60	7.91	6.26	363.87	810.26
168.000	50.00	1182.38	1140.87	1127.87	2279.00	1169.51	1133.76	1170.12	7.91	6.26	363.87	810.26
167.500	50.00	1182.38	1136.37	1123.37	2279.00	1175.03	1129.26	1175.64	7.91	6.26	363.87	810.26
167.500	50.00	1182.38	1136.37	1123.37	2279.00	1169.55	1129.26	1170.16	7.91	6.26	363.87	810.26
167.000	50.00	1182.38	1131.87	1118.87	2279.00	1175.07	1124.76	1175.68	7.91	6.26	363.87	810.26
167.000	50.00	1182.38	1131.87	1118.87	2279.00	1169.59	1124.76	1170.20	7.91	6.26	363.87	810.26
166.500	50.00	1182.38	1127.37	1114.37	2279.00	1175.11	1120.26	1175.72	7.91	6.26	363.87	810.26
166.500	50.00	1182.38	1127.37	1114.37	2279.00	1169.63	1120.26	1170.24	7.91	6.26	363.87	810.26

SECNO	XLCH	ELTRD	ELLC	ELMIN	Q	CWSEL	CRIWS	EG	10*KS	VCH	AREA	.01K
166.000	50.00	1182.38	1122.87	1109.87	2279.00	1175.15	1115.76	1175.75	7.91	6.26	363.87	810.26
166.000	50.00	1182.38	1122.87	1109.87	2279.00	1169.67	1115.76	1170.28	7.91	6.26	363.87	810.26
165.830	17.00	1182.38	1121.40	1108.40	2279.00	1175.16	1114.29	1175.77	7.91	6.26	363.87	810.26
165.830	17.00	1182.38	1121.40	1108.40	2279.00	1169.68	1114.29	1170.29	7.91	6.26	363.87	810.26
165.230	60.00	1185.00	1121.00	1103.00	2279.00	1174.88	1112.90	1176.15	8.54	9.06	251.63	779.67
165.230	60.00	1185.00	1121.00	1103.00	2279.00	1169.40	1112.90	1170.67	8.54	9.06	251.63	779.67
162.230	300.00	1185.00	1121.33	1103.33	2279.00	1175.13	1113.23	1176.41	8.54	9.06	251.63	779.67
162.230	300.00	1185.00	1121.33	1103.33	2279.00	1169.66	1113.23	1170.93	8.54	9.06	251.64	779.67

100-YEAR DISCHARGE IN TU

SUMMARY PRINTOUT TABLE 150

	SECNO	Q	CWSEL	DIFWSP	DIFWSX	DIFKWS	TOPWID	XLCH
	204.750	2331.00	1172.12	.00	.00	.00	30.00	.00
*	204.750	2331.00	1163.71	-8.41	.00	.00	30.00	.00
	204.740	2331.00	1172.24	.00	.12	.00	30.00	1.00
*	204.740	2331.00	1165.76	-6.48	2.05	.00	30.00	1.00
	203.750	2331.00	1172.25	.00	.02	.00	30.00	99.00
	203.750	2331.00	1165.83	-6.43	.07	.00	30.00	99.00
	203.660	2331.00	1172.24	.00	-.02	.00	29.00	9.00
	203.660	2331.00	1165.78	-6.46	-.05	.00	29.00	9.00
*	203.650	2331.00	1172.06	.00	-.17	.00	29.00	1.00
	203.650	2331.00	1165.71	-6.35	-.07	.00	27.99	1.00
	203.000	2331.00	1172.12	.00	.05	.00	29.00	65.00
	203.000	2331.00	1165.81	-6.31	.10	.00	27.99	65.00
	200.000	2331.00	1172.37	.00	.25	.00	29.00	300.00
	200.000	2331.00	1166.23	-6.13	.43	.00	27.99	300.00
	197.000	2331.00	1172.61	.00	.25	.00	29.00	300.00
	197.000	2331.00	1166.61	-6.00	.38	.00	27.99	300.00
	194.000	2331.00	1172.86	.00	.25	.00	29.00	300.00
	194.000	2331.00	1166.96	-5.90	.35	.00	27.99	300.00
	191.000	2331.00	1173.11	.00	.25	.00	29.00	300.00
	191.000	2331.00	1167.29	-5.83	.32	.00	27.99	300.00
	188.000	2331.00	1173.36	.00	.25	.00	29.00	300.00
	188.000	2331.00	1167.59	-5.77	.31	.00	27.99	300.00
	185.000	2305.00	1173.62	.00	.26	.00	29.00	300.00
	185.000	2305.00	1167.90	-5.72	.31	.00	27.99	300.00
	182.000	2305.00	1173.86	.00	.24	.00	29.00	300.00
	182.000	2305.00	1168.16	-5.70	.26	.00	27.99	300.00
	180.000	2279.00	1174.04	.00	.18	.00	29.00	200.00
	180.000	2279.00	1168.36	-5.68	.19	.00	27.99	200.00
	179.500	2279.00	1174.08	.00	.04	.00	29.00	50.00
	179.500	2279.00	1168.60	-5.47	.25	.00	29.00	50.00
	179.000	2279.00	1174.12	.00	.04	.00	29.01	50.00
	179.000	2279.00	1168.64	-5.47	.04	.00	29.00	50.00

SECNO	Q	CWSEL	DIFWSP	DIFWSX	DIFKWS	TOPWID	XLCH
178.500	2279.00	1174.16	.00	.04	.00	29.01	50.00
178.500	2279.00	1168.68	-5.47	.04	.00	29.01	50.00
178.000	2279.00	1174.20	.00	.04	.00	29.01	50.00
178.000	2279.00	1168.72	-5.47	.04	.00	29.01	50.00
176.000	2279.00	1174.35	.00	.16	.00	29.01	200.00
176.000	2279.00	1168.88	-5.47	.16	.00	29.01	200.00
174.000	2279.00	1174.51	.00	.16	.00	29.01	200.00
174.000	2279.00	1169.04	-5.47	.16	.00	29.01	200.00
172.000	2279.00	1174.67	.00	.16	.00	29.01	200.00
172.000	2279.00	1169.20	-5.47	.16	.00	29.01	200.00
170.000	2279.00	1174.83	.00	.16	.00	29.01	200.00
170.000	2279.00	1169.35	-5.47	.16	.00	29.01	200.00
169.000	2279.00	1174.91	.00	.08	.00	29.01	100.00
169.000	2279.00	1169.43	-5.47	.08	.00	29.01	100.00
168.500	2279.00	1174.95	.00	.04	.00	29.01	50.00
168.500	2279.00	1169.47	-5.47	.04	.00	29.01	50.00
168.000	2279.00	1174.99	.00	.04	.00	29.01	50.00
168.000	2279.00	1169.51	-5.47	.04	.00	29.01	50.00
167.500	2279.00	1175.03	.00	.04	.00	29.02	50.00
167.500	2279.00	1169.55	-5.47	.04	.00	29.01	50.00
167.000	2279.00	1175.07	.00	.04	.00	29.02	50.00
167.000	2279.00	1169.59	-5.47	.04	.00	29.02	50.00
166.500	2279.00	1175.11	.00	.04	.00	29.02	50.00
166.500	2279.00	1169.63	-5.47	.04	.00	29.02	50.00
166.000	2279.00	1175.15	.00	.04	.00	29.02	50.00
166.000	2279.00	1169.67	-5.47	.04	.00	29.02	50.00
165.830	2279.00	1175.16	.00	.01	.00	29.02	17.00
165.830	2279.00	1169.68	-5.47	.01	.00	29.02	17.00
165.230	2279.00	1174.88	.00	-.28	.00	18.00	60.00
165.230	2279.00	1169.40	-5.47	-.28	.00	18.00	60.00
162.230	2279.00	1175.13	.00	.26	.00	18.00	300.00
162.230	2279.00	1169.66	-5.47	.26	.00	18.00	300.00

SUMMARY OF ERRORS AND SPECIAL NOTES

CAUTION SECNO= 204.750 PROFILE= 2 CRITICAL DEPTH ASSUMED

WARNING SECNO= 204.740 PROFILE= 2 CONVEYANCE CHANGE OUTSIDE ACCEPTABLE RANGE

WARNING SECNO= 203.650 PROFILE= 1 CONVEYANCE CHANGE OUTSIDE ACCEPTABLE RANGE

ALTERNATIVE 2 HEC-2 MODEL

```
****************************************************
*  WATER SURFACE PROFILES                          *
*  DEVELOPED BY THE COE                            *
*  VERSION OF SEPTEMBER 1988                       *
*                                                  *
*  RUN DATE     7/26/89   TIME   11: 2:33          *
****************************************************
```

```
*************************************
*  DODSON AND ASSOCIATES, INC.      *
*  HYDROLOGIST AND CIVIL ENGINEERS  *
*  7015 W TIDWELL SUITE 107         *
*  HOUSTON, TEXAS 77092             *
*  (713) 895-8322                   *
*************************************
```

```
X     X  XXXXXXX   XXXXX            XXXXX
X     X  X       X     X          X     X
X     X  X       X                      X
XXXXXXX  XXXX     X         XXXXX   XXXXX
X     X  X       X                X
X     X  X       X     X          X
X     X  XXXXXXX   XXXXX           XXXXXXX
```

END OF BANNER

THIS RUN EXECUTED 7/26/89 11: 2:33

```
**************************************************
 HEC2 RELEASE DATED SEPT 88

**************************************************

T1      PRICE ROAD DRAIN EXTENTION AND OUTFALL RESTUDY
T2      SUBCRITICAL RUN WITH BOX CULVERT AND OPEN CHANNEL -- ALT. 2
T3      100-YEAR DISCHARGE IN TUNNEL AND 10-YEAR FLOOD IN RIVER

J1  ICHECK   INQ     NINV    IDIR    STRT    METRIC  HVINS   Q       WSEL    FQ

             2                                                     1172.12

J2  NPROF    IPLOT   PRFVS   XSECV   XSECH   FN      ALLDC   IBW     CHNIM   ITRACE

     1               -1                              -.1

J3  VARIABLE CODES FOR SUMMARY PRINTOUT

    38      42      43      26      2       1       8       10      3       5
    39       4      20

NC    .015    .015    .015     .1      .3
QT       2    2331    2331
             BEGIN ENERGY DISSIPATOR -WEIR AT THE RIVER
X1  204.75       4       0      30       0       0       0
GR  1175.0       0  1158.0       0  1158.0      30  1175.0      30

X1  204.74                                  1       1       1              -1.85

             BEGIN APPROACH CHANNEL
X1  203.75                                 99      99      99                .03

             BEGIN THIRD TRANSITION  - FROM TRAP. CHANNEL TO RECT. CHANNEL
X1  203.00       4       0    71.4      75      75      75
GR  1175.0       0 1156.21    28.2 1156.21    43.2  1175.0    71.4

X1  200.00                                300     300     300                .10

X1  197.00                                300     300     300                .10

X1  194.00                                300     300     300                .10

X1  191.00                                300     300     300                .11
```

```
X1   188.00                                    300       300       300                 .10

QT       2      2305      2305
X1   185.00                                    300       300       300                 .10

X1   182.00                                    300       300       300                 .11

NC                                   .3        .5
                BEGIN OPEN CHANNEL
X1   180.75                                    125       125       125                 .04

X1   180.01        4         0        29        74        74        74
GR   1173.4        0    1157.0         0    1157.0        29   1173.38        29

QT       2      2279      2279
                BEGIN SECOND TRANSITION - FROM RCB TO OPEN CHANNEL
X1   180.00       10      0.01        29         1         1         1
BT       4         0   1182.38   1182.38      0.01   1182.38   1170.00        29   1182.38   1170.00
BT   29.01   1182.38   1182.38
GR   1182.4        0    1170.0      0.01   1157.00      0.01   1157.00        14   1170.00        14
GR   1170.0       15    1157.0        15   1157.00        29   1170.00        29   1182.38     29.01

NC                                   .1        .3
X1   179.50                                     50        50        50                -4.75
X2                                                                   1

X1   179.00                                     50        50        50                -4.75
X2                                                                   1

X1   178.50                                     50        50        50                -4.75
X2                                                                   1

X1   178.00                                     50        50        50                -4.75
X2                                                                   1

X1   176.00                                    200       200       200                 -.25
X2                                                                   1

X1   174.00                                    200       200       200                 -.25
X2                                                                   1

X1   172.00                                    200       200       200                 -.25
X2                                                                   1

X1   170.00                                    200       200       200                 -.25
X2                                                                   1

X1   169.00                                    100       100       100                 -.13
X2                                                                   1
```

```
X1   168.50                                    50        50        50                -4.5
X2                                                                 1

X1   168.00                                    50        50        50                -4.5
X2                                                                 1

X1   167.50                                    50        50        50                -4.5
X2                                                                 1

X1   167.00                                    50        50        50                -4.5
X2                                                                 1

X1   166.50                                    50        50        50                -4.5
X2                                                                 1

X1   166.00                                    50        50        50                -4.5
X2                                                                 1

NC                                   .3        .5
                BEGIN 2-14'X13' RCB
X1   165.83                                    17        17        17                -1.47
X2                                                                 1

NC     .013      .013      .013
                END TUNNEL EXIT, BEGIN FIRST TRANSITION -DR. SONG'S STA. 90
X1   165.23        17      0.01        18        60        60        60
BT      17          0   1185.00   1185.00      0.01   1185.00   1112.00     0.055   1185.00   1113.00
BT   0.515    1185.0     1115.0     1.515   1185.00   1117.00     3.345   1185.00   1119.00     4.877
BT   1185.0    1120.0     6.042    1185.0   1120.50     9.000   1185.00   1121.00    11.958   1185.00
BT   1120.5    13.123    1185.0    1120.0    14.655   1185.00   1119.00    16.485   1185.00   1117.00
BT   17.485    1185.0     1115.0    17.945   1185.00   1113.00    18.000   1185.00   1112.00    18.010
BT   1185.0    1112.0
GR   1185.0        0     1112.0      0.01   1111.00     0.055   1109.00     0.515   1107.00     1.515
GR   1105.0     3.345    1104.0     4.877   1103.50     6.042   1103.00     9.000   1103.50    11.958
GR   1104.0    13.123    1105.0    14.655   1107.00    16.485   1109.00    17.485   1111.00    17.945
GR   1112.0    18.000   1185.00    18.001

NC                                   .1        .3
X1   162.23                                   300       300       300                 .33
X2                                                                 1
```

```
   SECNO    DEPTH    CWSEL    CRIWS    WSELK    EG       HV       HL       OLOSS   BANK ELEV
   Q        QLOB     QCH      QROB     ALOB     ACH      AROB     VOL      TWA   LEFT/RIGHT
   TIME     VLOB     VCH      VROB     XNL      XNCH     XNR      WTN      ELMIN      SSTA
   SLOPE    XLOBL    XLCH     XLOBR    ITRIAL   IDC      ICONT    CORAR    TOPWID     ENDST


*PROF 1

CRITICAL DEPTH TO BE CALCULATED AT ALL CROSS SECTIONS
ALLOWABLE ERROR FOR CRITICAL DEPTH DETERMINATION (ALLDC) =   .100 PERCENT OF THE DEPTH
0

CCHV=     .100 CEHV=     .300
*SECNO 204.750
                BEGIN ENERGY DISSIPATOR -WEIR AT THE RIVER
   204.75    14.12  1172.12  1163.71  1172.12  1172.59      .47      .00      .00  1175.00
    2331.       0.    2331.       0.       0.     424.       0.       0.       0.  1175.00
      .00      .00     5.50      .00     .000     .015     .000     .000  1158.00      .00
  .000219       0.       0.       0        0       20        0      .00    30.00    30.00


*SECNO 204.740
   204.74    16.09  1172.24  1161.86      .00  1172.60      .36      .00      .01  1173.15
    2331.       0.    2331.       0.       0.     483.       0.       0.       0.  1173.15
      .00      .00     4.83      .00     .000     .015     .000     .000  1156.15      .00
  .000155       1.       1.       1.        2       21        0      .00    30.00    30.00


*SECNO 203.750
                BEGIN APPROACH CHANNEL
   203.75    16.07  1172.25  1161.89      .00  1172.62      .36      .02      .00  1173.18
    2331.       0.    2331.       0.       0.     482.       0.       1.       0.  1173.18
      .01      .00     4.83      .00     .000     .015     .000     .000  1156.18      .00
  .000155      99.      99.      99.        0       26        0      .00    30.00    30.00


*SECNO 203.000

3302 WARNING:  CONVEYANCE CHANGE OUTSIDE OF ACCEPTABLE RANGE

                BEGIN THIRD TRANSITION  - FROM TRAP. CHANNEL TO RECT. CHANNEL
   203.00    16.22  1172.43  1163.31      .00  1172.64      .21      .01      .02  1175.00
    2331.       0.    2331.       0.       0.     638.       0.       2.       0.  1175.00
      .01      .00     3.65      .00     .000     .015     .000     .000  1156.21     3.85
  .000076      75.      75.      75.        2       14        0      .00    63.70    67.55


*SECNO 200.000
   200.00    16.14  1172.45  1163.41      .00  1172.66      .21      .02      .00  1175.10
    2331.       0.    2331.       0.       0.     634.       0.       6.       1.  1175.10
      .03      .00     3.68      .00     .000     .015     .000     .000  1156.31     3.96
  .000078     300.     300.     300.        1       17        0      .00    63.48    67.44
```

SECNO	DEPTH	CWSEL	CRIWS	WSELK	EG	HV	HL	OLOSS	BANK ELEV
Q	QLOB	QCH	QROB	ALOB	ACH	AROB	VOL	TWA	LEFT/RIGHT
TIME	VLOB	VCH	VROB	XNL	XNCH	XNR	WTN	ELMIN	SSTA
SLOPE	XLOBL	XLCH	XLOBR	ITRIAL	IDC	ICONT	CORAR	TOPWID	ENDST

*SECNO 197.000

197.00	16.07	1172.48	1163.52	.00	1172.69	.21	.02	.00	1175.20
2331.	0.	2331.	0.	0.	628.	0.	11.	1.	1175.20
.06	.00	3.71	.00	.000	.015	.000	.000	1156.41	4.09
.000079	300.	300.	300.	0	14	0	.00	63.23	67.31

*SECNO 194.000

194.00	15.99	1172.50	1163.61	.00	1172.71	.22	.02	.00	1175.30
2331.	0.	2331.	0.	0.	623.	0.	15.	1.	1175.30
.08	.00	3.74	.00	.000	.015	.000	.000	1156.51	4.20
.000081	300.	300.	300.	0	14	0	.00	62.99	67.20

*SECNO 191.000

191.00	15.90	1172.52	1163.73	.00	1172.74	.22	.02	.00	1175.41
2331.	0.	2331.	0.	0.	618.	0.	19.	2.	1175.41
.10	.00	3.77	.00	.000	.015	.000	.000	1156.62	4.34
.000083	300.	300.	300.	0	15	0	.00	62.73	67.06

*SECNO 188.000

188.00	15.82	1172.54	1163.84	.00	1172.77	.22	.03	.00	1175.51
2331.	0.	2331.	0.	0.	613.	0.	24.	2.	1175.51
.12	.00	3.80	.00	.000	.015	.000	.000	1156.72	4.45
.000085	300.	300.	300.	0	15	0	.00	62.50	66.95

*SECNO 185.000

185.00	15.75	1172.57	1163.90	.00	1172.79	.22	.03	.00	1175.61
2305.	0.	2305.	0.	0.	608.	0.	28.	3.	1175.61
.14	.00	3.79	.00	.000	.015	.000	.000	1156.82	4.57
.000085	300.	300.	300.	0	16	0	.00	62.26	66.83

*SECNO 182.000

182.00	15.66	1172.59	1164.00	.00	1172.82	.23	.03	.00	1175.72
2305.	0.	2305.	0.	0.	603.	0.	32.	3.	1175.72
.17	.00	3.82	.00	.000	.015	.000	.000	1156.93	4.69
.000087	300.	300.	300.	0	19	0	.00	62.02	66.71

```
  SECNO    DEPTH    CWSEL    CRIWS    WSELK    EG       HV       HL       OLOSS    BANK ELEV
  Q        QLOB     QCH      QROB     ALOB     ACH      AROB     VOL      TWA    LEFT/RIGHT
  TIME     VLOB     VCH      VROB     XNL      XNCH     XNR      WTN      ELMIN      SSTA
  SLOPE    XLOBL    XLCH     XLOBR    ITRIAL   IDC      ICONT    CORAR    TOPWID     ENDST


CCHV=     .300 CEHV=     .500
*SECNO 180.750
                BEGIN OPEN CHANNEL
  180.75    15.63  1172.60  1164.04      .00  1172.83      .23      .01      .00  1175.76
   2305.       0.    2305.       0.       0.     601.       0.      34.       3.   1175.76
     .18      .00     3.83      .00     .000     .015     .000     .000  1156.97     4.74
 .000087     125.     125.     125.        0       19        0      .00    61.92    66.66


*SECNO 180.010

3302 WARNING:  CONVEYANCE CHANGE OUTSIDE OF ACCEPTABLE RANGE

  180.01    15.52  1172.52  1162.79      .00  1172.93      .41      .01      .09  1173.40
   2305.       0.    2305.       0.       0.     450.       0.      35.       3.   1173.38
     .18      .00     5.12      .00     .000     .015     .000     .000  1157.00      .00
 .000182      74.      74.      74.        2       18        0      .00    29.00    29.00


*SECNO 180.000

3302 WARNING:  CONVEYANCE CHANGE OUTSIDE OF ACCEPTABLE RANGE


3370 NORMAL BRIDGE, NRD=   4 MIN ELTRD=  1182.38 MAX ELLC=  1170.00

                BEGIN SECOND TRANSITION - FROM RCB TO OPEN CHANNEL
  180.00    15.42  1172.42  1162.89      .00  1173.03      .61      .00      .10  1170.00
   2279.       0.    2279.       0.       0.     364.       0.      35.       3.   1170.00
     .18      .00     6.26      .00     .000     .015     .000     .000  1157.00      .01
 .000791       1.       1.       1.        2       15        0   -70.17    28.99    29.00


CCHV=     .100 CEHV=     .300
*SECNO 179.500

3370 NORMAL BRIDGE, NRD=   4 MIN ELTRD=  1182.38 MAX ELLC=  1165.25

  179.50    20.21  1172.46  1158.14      .00  1173.07      .61      .04      .00  1165.25
   2279.       0.    2279.       0.       0.     364.       0.      35.       3.   1165.25
     .18      .00     6.26      .00     .000     .015     .000     .000  1152.25      .00
 .000791      50.      50.      50.        1       15        0  -208.84    29.00    29.01
```

```
SECNO    DEPTH    CWSEL    CRIWS    WSELK    EG       HV       HL       OLOSS    BANK ELEV
Q        QLOB     QCH      QROB     ALOB     ACH      AROB     VOL      TWA    LEFT/RIGHT
TIME     VLOB     VCH      VROB     XNL      XNCH     XNR      WTN      ELMIN      SSTA
SLOPE    XLOBL    XLCH     XLOBR    ITRIAL   IDC      ICONT    CORAR    TOPWID     ENDST


*SECNO 179.000

3370 NORMAL BRIDGE, NRD=   4 MIN ELTRD=  1182.38 MAX ELLC=  1160.50

  179.00    25.00  1172.50  1153.39      .00  1173.11      .61      .04      .00  1160.50
   2279.       0.    2279.       0.       0.     364.       0.      35.       4.  1160.50
     .18      .00     6.26      .00     .000     .015     .000     .000  1147.50      .00
 .000791      50.      50.      50.        0       15        0  -347.98    29.01    29.01


*SECNO 178.500
3280 CROSS SECTION    178.50 EXTENDED      4.41 FEET


3370 NORMAL BRIDGE, NRD=   4 MIN ELTRD=  1182.38 MAX ELLC=  1155.75

  178.50    29.79  1172.54  1148.64      .00  1173.15      .61      .04      .00  1155.75
   2279.       0.    2279.       0.       0.     364.       0.      36.       4.  1155.75
     .19      .00     6.26      .00     .000     .015     .000     .000  1142.75      .00
 .000791      50.      50.      50.        0       15        0  -486.93    29.01    29.01


*SECNO 178.000
3280 CROSS SECTION    178.00 EXTENDED      9.20 FEET


3370 NORMAL BRIDGE, NRD=   4 MIN ELTRD=  1182.38 MAX ELLC=  1151.00

  178.00    34.58  1172.58  1143.89      .00  1173.19      .61      .04      .00  1151.00
   2279.       0.    2279.       0.       0.     364.       0.      36.       4.  1151.00
     .19      .00     6.26      .00     .000     .015     .000     .000  1138.00      .00
 .000791      50.      50.      50.        0       15        0  -625.88    29.01    29.01


*SECNO 176.000
3280 CROSS SECTION    176.00 EXTENDED      9.61 FEET


3370 NORMAL BRIDGE, NRD=   4 MIN ELTRD=  1182.38 MAX ELLC=  1150.75

  176.00    34.99  1172.74  1143.64      .00  1173.35      .61      .16      .00  1150.75
   2279.       0.    2279.       0.       0.     364.       0.      38.       4.  1150.75
     .20      .00     6.26      .00     .000     .015     .000     .000  1137.75      .00
 .000791     200.     200.     200.        0       15        0  -637.72    29.01    29.01
```

```
  SECNO    DEPTH    CWSEL    CRIWS    WSELK    EG       HV       HL       OLOSS   BANK ELEV
  Q        QLOB     QCH      QROB     ALOB     ACH      AROB     VOL      TWA   LEFT/RIGHT
  TIME     VLOB     VCH      VROB     XNL      XNCH     XNR      WTN      ELMIN      SSTA
  SLOPE    XLOBL    XLCH     XLOBR    ITRIAL   IDC      ICONT    CORAR    TOPWID     ENDST


*SECNO 174.000
3280 CROSS SECTION    174.00 EXTENDED     10.02 FEET


3370 NORMAL BRIDGE, NRD=   4 MIN ELTRD=  1182.38 MAX ELLC=  1150.50

  174.00    35.40  1172.90  1143.39      .00  1173.50      .61      .16      .00  1150.50
   2279.       0.    2279.       0.       0.     364.       0.      40.       4.  1150.50
     .21      .00     6.26      .00     .000     .015     .000     .000  1137.50      .00
 .000791     200.     200.     200.        0       15        0  -649.57    29.01    29.01


*SECNO 172.000
3280 CROSS SECTION    172.00 EXTENDED     10.42 FEET


3370 NORMAL BRIDGE, NRD=   4 MIN ELTRD=  1182.38 MAX ELLC=  1150.25

  172.00    35.80  1173.05  1143.14      .00  1173.66      .61      .16      .00  1150.25
   2279.       0.    2279.       0.       0.     364.       0.      41.       4.  1150.25
     .22      .00     6.26      .00     .000     .015     .000     .000  1137.25      .00
 .000791     200.     200.     200.        0       15        0  -661.41    29.01    29.01


*SECNO 170.000
3280 CROSS SECTION    170.00 EXTENDED     10.83 FEET


3370 NORMAL BRIDGE, NRD=   4 MIN ELTRD=  1182.38 MAX ELLC=  1150.00

  170.00    36.21  1173.21  1142.89      .00  1173.82      .61      .16      .00  1150.00
   2279.       0.    2279.       0.       0.     364.       0.      43.       4.  1150.00
     .22      .00     6.26      .00     .000     .015     .000     .000  1137.00      .00
 .000791     200.     200.     200.        0       15        0  -673.25    29.01    29.01


*SECNO 169.000
3280 CROSS SECTION    169.00 EXTENDED     11.04 FEET


3370 NORMAL BRIDGE, NRD=   4 MIN ELTRD=  1182.38 MAX ELLC=  1149.87

  169.00    36.42  1173.29  1142.76      .00  1173.90      .61      .08      .00  1149.87
   2279.       0.    2279.       0.       0.     364.       0.      44.       4.  1149.87
     .23      .00     6.26      .00     .000     .015     .000     .000  1136.87      .00
 .000791     100.     100.     100.        0       15        0  -679.32    29.01    29.01
```

```
  SECNO    DEPTH    CWSEL    CRIWS    WSELK    EG       HV       HL       OLOSS   BANK ELEV
  Q        QLOB     QCH      QROB     ALOB     ACH      AROB     VOL      TWA   LEFT/RIGHT
  TIME     VLOB     VCH      VROB     XNL      XNCH     XNR      WTN      ELMIN      SSTA
  SLOPE    XLOBL    XLCH     XLOBR    ITRIAL   IDC      ICONT    CORAR    TOPWID     ENDST


*SECNO 168.500
3280 CROSS SECTION    168.50 EXTENDED     15.58 FEET


3370 NORMAL BRIDGE, NRD=   4 MIN ELTRD=  1182.38 MAX ELLC=  1145.37

  168.50    40.96  1173.33  1138.26      .00  1173.94      .61      .04      .00  1145.37
   2279.       0.    2279.       0.       0.     364.       0.      44.       4.  1145.37
     .23      .00     6.26      .00     .000     .015     .000     .000  1132.37      .00
 .000791      50.      50.      50.        0       15        0  -811.02    29.01    29.01


*SECNO 168.000
3280 CROSS SECTION    168.00 EXTENDED     20.12 FEET


3370 NORMAL BRIDGE, NRD=   4 MIN ELTRD=  1182.38 MAX ELLC=  1140.87

  168.00    45.50  1173.37  1133.76      .00  1173.98      .61      .04      .00  1140.87
   2279.       0.    2279.       0.       0.     364.       0.      45.       4.  1140.87
     .23      .00     6.26      .00     .000     .015     .000     .000  1127.87      .00
 .000791      50.      50.      50.        0       15        0  -942.73    29.01    29.01


*SECNO 167.500
3280 CROSS SECTION    167.50 EXTENDED     24.66 FEET


3370 NORMAL BRIDGE, NRD=   4 MIN ELTRD=  1182.38 MAX ELLC=  1136.37

  167.50    50.04  1173.41  1129.26      .00  1174.02      .61      .04      .00  1136.37
   2279.       0.    2279.       0.       0.     364.       0.      45.       4.  1136.37
     .24      .00     6.26      .00     .000     .015     .000     .000  1123.37      .00
 .000791      50.      50.      50.        0       15        0 -1074.44    29.01    29.01


*SECNO 167.000
3280 CROSS SECTION    167.00 EXTENDED     29.20 FEET


3370 NORMAL BRIDGE, NRD=   4 MIN ELTRD=  1182.38 MAX ELLC=  1131.87

  167.00    54.58  1173.45  1124.76      .00  1174.06      .61      .04      .00  1131.87
   2279.       0.    2279.       0.       0.     364.       0.      45.       4.  1131.87
     .24      .00     6.26      .00     .000     .015     .000     .000  1118.87      .00
 .000791      50.      50.      50.        0       15        0 -1206.16    29.02    29.02
```

```
  SECNO    DEPTH    CWSEL    CRIWS    WSELK    EG       HV       HL       OLOSS   BANK ELEV
  Q        QLOB     QCH      QROB     ALOB     ACH      AROB     VOL      TWA   LEFT/RIGHT
  TIME     VLOB     VCH      VROB     XNL      XNCH     XNR      WTN      ELMIN      SSTA
  SLOPE    XLOBL    XLCH     XLOBR    ITRIAL   IDC      ICONT    CORAR    TOPWID     ENDST


*SECNO 166.500
3280 CROSS SECTION    166.50 EXTENDED     33.74 FEET


3370 NORMAL BRIDGE, NRD=   4 MIN ELTRD=  1182.38 MAX ELLC=  1127.37

  166.50    59.12  1173.49  1120.26      .00  1174.10      .61      .04      .00  1127.37
   2279.       0.    2279.       0.       0.     364.       0.      46.       4.  1127.37
     .24      .00     6.26      .00     .000     .015     .000     .000  1114.37      .00
 .000791      50.      50.      50.        0       15        0 -1337.88    29.02    29.02


*SECNO 166.000
3280 CROSS SECTION    166.00 EXTENDED     38.28 FEET


3370 NORMAL BRIDGE, NRD=   4 MIN ELTRD=  1182.38 MAX ELLC=  1122.87

  166.00    63.66  1173.53  1115.76      .00  1174.14      .61      .04      .00  1122.87
   2279.       0.    2279.       0.       0.     364.       0.      46.       4.  1122.87
     .24      .00     6.26      .00     .000     .015     .000     .000  1109.87      .00
 .000791      50.      50.      50.        0       15        0 -1469.61    29.02    29.02


CCHV=     .300 CEHV=     .500
*SECNO 165.830
3280 CROSS SECTION    165.83 EXTENDED     39.76 FEET


3370 NORMAL BRIDGE, NRD=   4 MIN ELTRD=  1182.38 MAX ELLC=  1121.40

              BEGIN 2-14'X13' RCB
  165.83    65.14  1173.54  1114.29      .00  1174.15      .61      .01      .00  1121.40
   2279.       0.    2279.       0.       0.     364.       0.      46.       4.  1121.40
     .24      .00     6.26      .00     .000     .015     .000     .000  1108.40      .00
 .000791      17.      17.      17.        0       15        0 -1512.65    29.02    29.02


*SECNO 165.230

3301 HV CHANGED MORE THAN HVINS
```

```
SECNO    DEPTH    CWSEL    CRIWS    WSELK    EG       HV       HL       OLOSS    BANK ELEV
Q        QLOB     QCH      QROB     ALOB     ACH      AROB     VOL      TWA    LEFT/RIGHT
TIME     VLOB     VCH      VROB     XNL      XNCH     XNR      WTN      ELMIN      SSTA
SLOPE    XLOBL    XLCH     XLOBR    ITRIAL   IDC      ICONT    CORAR    TOPWID     ENDST


3370 NORMAL BRIDGE, NRD=  17 MIN ELTRD=  1185.00 MAX ELLC=  1121.00

              END TUNNEL EXIT, BEGIN FIRST TRANSITION -DR. SONG'S STA. 90
  165.23    70.26  1173.26  1112.90      .00  1174.53     1.27      .05      .33  1112.00
   2279.       0.    2279.       0.       0.     252.       0.      47.       4.  1112.00
     .24      .00     9.06      .00     .000     .013     .000     .000  1103.00      .00
 .000854      60.      60.      60.        2       24        0  -976.50    18.00    18.00


CCHV=     .100 CEHV=     .300
*SECNO 162.230

3370 NORMAL BRIDGE, NRD=  17 MIN ELTRD=  1185.00 MAX ELLC=  1121.33

  162.23    70.18  1173.51  1113.23      .00  1174.79     1.27      .26      .00  1112.33
   2279.       0.    2279.       0.       0.     252.       0.      49.       5.  1112.33
     .25      .00     9.06      .00     .000     .013     .000     .000  1103.33      .00
 .000854     300.     300.     300.        0       24        0  -975.01    18.00    18.00
```

```
T1      PRICE ROAD DRAIN EXTENTION AND OUTFALL RESTUDY
T2      SUBCRITICAL RUN WITH BOX CULVERT AND OPEN CHANNEL -- ALT. 2
T3      100-YEAR DISCHARGE IN TUNNEL AND NO FLOW IN RIVER

J1  ICHECK   INQ      NINV     IDIR     STRT     METRIC   HVINS    Q        WSEL     FQ

             3                          -1

J2  NPROF    IPLOT    PRFVS    XSECV    XSECH    FN       ALLDC    IBW      CHNIM    ITRACE

    15                -1                          -.1
```

```
SECNO    DEPTH    CWSEL    CRIWS    WSELK    EG       HV       HL       OLOSS    BANK ELEV
Q        QLOB     QCH      QROB     ALOB     ACH      AROB     VOL      TWA    LEFT/RIGHT
TIME     VLOB     VCH      VROB     XNL      XNCH     XNR      WTN      ELMIN      SSTA
SLOPE    XLOBL    XLCH     XLOBR    ITRIAL   IDC      ICONT    CORAR    TOPWID     ENDST


*PROF 2

CRITICAL DEPTH TO BE CALCULATED AT ALL CROSS SECTIONS
ALLOWABLE ERROR FOR CRITICAL DEPTH DETERMINATION (ALLDC) =   .100 PERCENT OF THE DEPTH
0

CCHV=     .100 CEHV=     .300
*SECNO 204.750
2096 WSEL NOT GIVEN, AVG OF MAX, MIN USED
3720 CRITICAL DEPTH ASSUMED
                BEGIN ENERGY DISSIPATOR -WEIR AT THE RIVER
   204.75     5.71  1163.71  1163.71      .00  1166.59     2.88      .00      .00  1175.00
    2331.      0.    2331.      0.       0.     171.      0.       0.       0.   1175.00
      .00     .00    13.61     .00     .000     .015     .000     .000  1158.00      .00
  .002844      0.      0.       0.       0       16        0      .00    30.00    30.00


*SECNO 204.740

3301 HV CHANGED MORE THAN HVINS


3302 WARNING:  CONVEYANCE CHANGE OUTSIDE OF ACCEPTABLE RANGE

   204.74     9.61  1165.76  1161.86      .00  1166.77     1.02      .00      .19  1173.15
    2331.      0.    2331.      0.       0.     288.      0.       0.       0.   1173.15
      .00     .00     8.09     .00     .000     .015     .000     .000  1156.15      .00
  .000631      1.      1.       1.       4        5        0      .00    30.00    30.00


*SECNO 203.750
                BEGIN APPROACH CHANNEL
   203.75     9.65  1165.83  1161.90      .00  1166.84     1.01      .06      .00  1173.18
    2331.      0.    2331.      0.       0.     289.      0.       1.       0.   1173.18
      .00     .00     8.05     .00     .000     .015     .000     .000  1156.18      .00
  .000624     99.     99.      99.       2        19       0      .00    30.00    30.00


*SECNO 203.000
                BEGIN THIRD TRANSITION  - FROM TRAP. CHANNEL TO RECT. CHANNEL
   203.00     9.64  1165.85  1163.32      .00  1166.90     1.05      .05      .01  1175.00
    2331.      0.    2331.      0.       0.     284.      0.       1.       0.   1175.00
      .01     .00     8.21     .00     .000     .015     .000     .000  1156.21    13.73
  .000673     75.     75.      75.       2        19       0      .00    43.94    57.67
```

```
  SECNO     DEPTH     CWSEL     CRIWS     WSELK     EG        HV        HL        OLOSS     BANK ELEV
  Q         QLOB      QCH       QROB      ALOB      ACH       AROB      VOL       TWA     LEFT/RIGHT
  TIME      VLOB      VCH       VROB      XNL       XNCH      XNR       WTN       ELMIN       SSTA
  SLOPE     XLOBL     XLCH      XLOBR     ITRIAL    IDC       ICONT     CORAR     TOPWID      ENDST


*SECNO 200.000
  200.00     9.79  1166.10  1163.42      .00  1167.10      1.00       .20       .00   1175.10
   2331.       0.    2331.       0.       0.     291.       0.        3.        0.   1175.10
     .02      .00     8.02      .00     .000     .015     .000      .000   1156.31     13.51
 .000633     300.     300.     300.        2       19        0       .00     44.37     57.89


*SECNO 197.000
  197.00     9.91  1166.32  1163.53      .00  1167.28       .96       .18       .00   1175.20
   2331.       0.    2331.       0.       0.     296.       0.        5.        1.   1175.20
     .03      .00     7.87      .00     .000     .015     .000      .000   1156.41     13.32
 .000601     300.     300.     300.        2       25        0       .00     44.76     58.08


*SECNO 194.000
  194.00    10.02  1166.53  1163.63      .00  1167.46       .93       .18       .00   1175.30
   2331.       0.    2331.       0.       0.     301.       0.        7.        1.   1175.30
     .04      .00     7.74      .00     .000     .015     .000      .000   1156.51     13.16
 .000574     300.     300.     300.        2       25        0       .00     45.09     58.24


*SECNO 191.000
  191.00    10.11  1166.73  1163.74      .00  1167.64       .91       .17       .00   1175.41
   2331.       0.    2331.       0.       0.     304.       0.        9.        1.   1175.41
     .05      .00     7.66      .00     .000     .015     .000      .000   1156.62     13.05
 .000558     300.     300.     300.        1       25        0       .00     45.31     58.35


*SECNO 188.000
  188.00    10.20  1166.92  1163.84      .00  1167.80       .88       .16       .00   1175.51
   2331.       0.    2331.       0.       0.     309.       0.       11.        2.   1175.51
     .06      .00     7.54      .00     .000     .015     .000      .000   1156.72     12.89
 .000535     300.     300.     300.        2       25        0       .00     45.62     58.51


*SECNO 185.000
  185.00    10.31  1167.13  1163.89      .00  1167.96       .84       .16       .00   1175.61
   2305.       0.    2305.       0.       0.     314.       0.       14.        2.   1175.61
     .07      .00     7.34      .00     .000     .015     .000      .000   1156.82     12.73
 .000502     300.     300.     300.        2       28        0       .00     45.93     58.67
```

```
  SECNO    DEPTH    CWSEL    CRIWS    WSELK    EG       HV       HL       OLOSS   BANK ELEV
  Q        QLOB     QCH      QROB     ALOB     ACH      AROB     VOL      TWA   LEFT/RIGHT
  TIME     VLOB     VCH      VROB     XNL      XNCH     XNR      WTN      ELMIN      SSTA
  SLOPE    XLOBL    XLCH     XLOBR    ITRIAL   IDC      ICONT    CORAR    TOPWID     ENDST


*SECNO 182.000
  182.00    10.36  1167.29  1164.00      .00  1168.11      .83      .15      .00  1175.72
   2305.       0.    2305.       0.       0.     316.       0.      16.       2.  1175.72
     .08      .00     7.29      .00     .000     .015     .000     .000  1156.93    12.66
 .000493     300.     300.     300.        0       28        0      .00    46.07    58.74


CCHV=     .300 CEHV=     .500
*SECNO 180.750
                BEGIN OPEN CHANNEL
  180.75    10.39  1167.36  1164.03      .00  1168.18      .82      .06      .00  1175.76
   2305.       0.    2305.       0.       0.     317.       0.      17.       2.  1175.76
     .09      .00     7.26      .00     .000     .015     .000     .000  1156.97    12.62
 .000487     125.     125.     125.        0       17        0      .00    46.15    58.78


*SECNO 180.010
  180.01    10.35  1167.35  1162.80      .00  1168.26      .92      .04      .05  1173.40
   2305.       0.    2305.       0.       0.     300.       0.      17.       3.  1173.38
     .09      .00     7.68      .00     .000     .015     .000     .000  1157.00      .00
 .000547      74.      74.      74.        2       15        0      .00    29.00    29.00


*SECNO 180.000

3265 DIVIDED FLOW


3370 NORMAL BRIDGE, NRD=   4 MIN ELTRD=  1182.38 MAX ELLC=  1170.00

                BEGIN SECOND TRANSITION - FROM RCB TO OPEN CHANNEL
  180.00    10.32  1167.32  1162.89      .00  1168.29      .97      .00      .02  1170.00
   2279.       0.    2279.       0.       0.     289.       0.      17.       3.  1170.00
     .09      .00     7.89      .00     .000     .015     .000     .000  1157.00      .01
 .000944       1.       1.       1.        2       15        0      .00    27.99    29.00


CCHV=     .100 CEHV=     .300
*SECNO 179.500

3370 NORMAL BRIDGE, NRD=   4 MIN ELTRD=  1182.38 MAX ELLC=  1165.25

  179.50    15.51  1167.76  1158.14      .00  1168.37      .61      .04      .04  1165.25
   2279.       0.    2279.       0.       0.     364.       0.      18.       3.  1165.25
     .09      .00     6.26      .00     .000     .015     .000     .000  1152.25      .01
 .000791      50.      50.      50.        2       15        0   -72.71    28.99    29.00
```

```
  SECNO    DEPTH    CWSEL    CRIWS    WSELK    EG       HV       HL       OLOSS    BANK ELEV
  Q        QLOB     QCH      QROB     ALOB     ACH      AROB     VOL      TWA    LEFT/RIGHT
  TIME     VLOB     VCH      VROB     XML      XNCH     XNR      WTN      ELMIN       SSTA
  SLOPE    XLOBL    XLCH     XLOBR    ITRIAL   IDC      ICONT    CORAR    TOPWID      ENDST


*SECNO 179.000

3370 NORMAL BRIDGE, NRD=   4 MIN ELTRD=  1182.38 MAX ELLC=  1160.50

  179.00    20.30  1167.80  1153.39      .00  1168.41      .61      .04      .00  1160.50
   2279.       0.    2279.       0.       0.     364.       0.      18.       3.   1160.50
     .09      .00     6.26      .00     .000     .015     .000     .000  1147.50      .00
 .000791      50.      50.      50.        0       15        0  -211.71    29.00    29.01


*SECNO 178.500

3370 NORMAL BRIDGE, NRD=   4 MIN ELTRD=  1182.38 MAX ELLC=  1155.75

  178.50    25.09  1167.84  1148.64      .00  1168.45      .61      .04      .00  1155.75
   2279.       0.    2279.       0.       0.     364.       0.      18.       3.   1155.75
     .10      .00     6.26      .00     .000     .015     .000     .000  1142.75      .00
 .000791      50.      50.      50.        0       15        0  -350.52    29.01    29.01


*SECNO 178.000
3280 CROSS SECTION    178.00 EXTENDED      4.50 FEET


3370 NORMAL BRIDGE, NRD=   4 MIN ELTRD=  1182.38 MAX ELLC=  1151.00

  178.00    29.88  1167.88  1143.89      .00  1168.49      .61      .04      .00  1151.00
   2279.       0.    2279.       0.       0.     364.       0.      19.       3.   1151.00
     .10      .00     6.26      .00     .000     .015     .000     .000  1138.00      .00
 .000791      50.      50.      50.        0       15        0  -489.47    29.01    29.01


*SECNO 176.000
3280 CROSS SECTION    176.00 EXTENDED      4.90 FEET


3370 NORMAL BRIDGE, NRD=   4 MIN ELTRD=  1182.38 MAX ELLC=  1150.75

  176.00    30.28  1168.03  1143.64      .00  1168.64      .61      .16      .00  1150.75
   2279.       0.    2279.       0.       0.     364.       0.      20.       3.   1150.75
     .11      .00     6.26      .00     .000     .015     .000     .000  1137.75      .00
 .000791     200.     200.     200.        0       15        0  -501.31    29.01    29.01
```

```
  SECNO    DEPTH    CWSEL    CRIWS    WSELK    EG       HV       HL       OLOSS   BANK ELEV
  Q        QLOB     QCH      QROB     ALOB     ACH      AROB     VOL      TWA   LEFT/RIGHT
  TIME     VLOB     VCH      VROB     XNL      XNCH     XNR      WTN      ELMIN      SSTA
  SLOPE    XLOBL    XLCH     XLOBR    ITRIAL   IDC      ICONT    CORAR    TOPWID     ENDST


*SECNO 174.000
3280 CROSS SECTION    174.00 EXTENDED      5.31 FEET


3370 NORMAL BRIDGE, NRD=   4 MIN ELTRD=  1182.38 MAX ELLC=  1150.50

  174.00    30.69  1168.19  1143.39      .00  1168.80      .61      .16      .00  1150.50
   2279.       0.    2279.       0.       0.     364.       0.      22.       3.   1150.50
     .12      .00     6.26      .00     .000     .015     .000     .000  1137.50      .00
 .000791     200.     200.     200.        0       15        0  -513.16    29.01    29.01


*SECNO 172.000
3280 CROSS SECTION    172.00 EXTENDED      5.72 FEET


3370 NORMAL BRIDGE, NRD=   4 MIN ELTRD=  1182.38 MAX ELLC=  1150.25

  172.00    31.10  1168.35  1143.14      .00  1168.96      .61      .16      .00  1150.25
   2279.       0.    2279.       0.       0.     364.       0.      24.       3.   1150.25
     .13      .00     6.26      .00     .000     .015     .000     .000  1137.25      .00
 .000791     200.     200.     200.        0       15        0  -525.00    29.01    29.01


*SECNO 170.000
3280 CROSS SECTION    170.00 EXTENDED      6.13 FEET


3370 NORMAL BRIDGE, NRD=   4 MIN ELTRD=  1182.38 MAX ELLC=  1150.00

  170.00    31.51  1168.51  1142.89      .00  1169.12      .61      .16      .00  1150.00
   2279.       0.    2279.       0.       0.     364.       0.      25.       3.   1150.00
     .13      .00     6.26      .00     .000     .015     .000     .000  1137.00      .00
 .000791     200.     200.     200.        0       15        0  -536.84    29.01    29.01


*SECNO 169.000
3280 CROSS SECTION    169.00 EXTENDED      6.34 FEET


3370 NORMAL BRIDGE, NRD=   4 MIN ELTRD=  1182.38 MAX ELLC=  1149.87

  169.00    31.72  1168.59  1142.76      .00  1169.20      .61      .08      .00  1149.87
   2279.       0.    2279.       0.       0.     364.       0.      26.       3.   1149.87
     .14      .00     6.26      .00     .000     .015     .000     .000  1136.87      .00
 .000791     100.     100.     100.        0       15        0  -542.91    29.01    29.01
```

```
  SECNO    DEPTH    CWSEL    CRIWS    WSELK    EG       HV       HL       OLOSS   BANK ELEV
  Q        QLOB     QCH      QROB     ALOB     ACH      AROB     VOL      TWA   LEFT/RIGHT
  TIME     VLOB     VCH      VROB     XNL      XNCH     XNR      WTN      ELMIN      SSTA
  SLOPE    XLOBL    XLCH     XLOBR    ITRIAL   IDC      ICONT    CORAR    TOPWID     ENDST


*SECNO 168.500
3280 CROSS SECTION    168.50 EXTENDED     10.88 FEET


3370 NORMAL BRIDGE, NRD=   4 MIN ELTRD=  1182.38 MAX ELLC=  1145.37

   168.50    36.26  1168.63  1138.26      .00  1169.24      .61      .04      .00  1145.37
    2279.       0.    2279.       0.       0.     364.       0.      27.       3.  1145.37
      .14      .00     6.26      .00     .000     .015     .000     .000  1132.37      .00
  .000791      50.      50.      50.        0       15        0  -674.61    29.01    29.01


*SECNO 168.000
3280 CROSS SECTION    168.00 EXTENDED     15.42 FEET


3370 NORMAL BRIDGE, NRD=   4 MIN ELTRD=  1182.38 MAX ELLC=  1140.87

   168.00    40.80  1168.67  1133.76      .00  1169.28      .61      .04      .00  1140.87
    2279.       0.    2279.       0.       0.     364.       0.      27.       3.  1140.87
      .14      .00     6.26      .00     .000     .015     .000     .000  1127.87      .00
  .000791      50.      50.      50.        0       15        0  -806.31    29.01    29.01


*SECNO 167.500
3280 CROSS SECTION    167.50 EXTENDED     19.96 FEET


3370 NORMAL BRIDGE, NRD=   4 MIN ELTRD=  1182.38 MAX ELLC=  1136.37

   167.50    45.34  1168.71  1129.26      .00  1169.32      .61      .04      .00  1136.37
    2279.       0.    2279.       0.       0.     364.       0.      28.       3.  1136.37
      .15      .00     6.26      .00     .000     .015     .000     .000  1123.37      .00
  .000791      50.      50.      50.        0       15        0  -938.02    29.01    29.01


*SECNO 167.000
3280 CROSS SECTION    167.00 EXTENDED     24.50 FEET


3370 NORMAL BRIDGE, NRD=   4 MIN ELTRD=  1182.38 MAX ELLC=  1131.87

   167.00    49.88  1168.75  1124.76      .00  1169.36      .61      .04      .00  1131.87
    2279.       0.    2279.       0.       0.     364.       0.      28.       3.  1131.87
      .15      .00     6.26      .00     .000     .015     .000     .000  1118.87      .00
  .000791      50.      50.      50.        0       15        0 -1069.73    29.01    29.01
```

```
   SECNO    DEPTH    CWSEL    CRIWS    WSELK    EG       HV       HL       OLOSS   BANK ELEV
   Q        QLOB     QCH      QROB     ALOB     ACH      AROB     VOL      TWA   LEFT/RIGHT
   TIME     VLOB     VCH      VROB     XNL      XNCH     XNR      WTN      ELMIN      SSTA
   SLOPE    XLOBL    XLCH     XLOBR    ITRIAL   IDC      ICONT    CORAR    TOPWID     ENDST


*SECNO 166.500
3280 CROSS SECTION    166.50 EXTENDED     29.04 FEET


3370 NORMAL BRIDGE, NRD=   4 MIN ELTRD=  1182.38 MAX ELLC=  1127.37

   166.50    54.42  1168.79  1120.26      .00  1169.40      .61      .04      .00  1127.37
    2279.       0.    2279.       0.       0.     364.       0.      28.       3.   1127.37
      .15      .00     6.26      .00     .000     .015     .000     .000  1114.37      .00
  .000791      50.      50.      50.        0       15        0 -1201.45    29.02    29.02


*SECNO 166.000
3280 CROSS SECTION    166.00 EXTENDED     33.58 FEET


3370 NORMAL BRIDGE, NRD=   4 MIN ELTRD=  1182.38 MAX ELLC=  1122.87

   166.00    58.96  1168.83  1115.76      .00  1169.44      .61      .04      .00  1122.87
    2279.       0.    2279.       0.       0.     364.       0.      29.       3.   1122.87
      .15      .00     6.26      .00     .000     .015     .000     .000  1109.87      .00
  .000791      50.      50.      50.        0       15        0 -1333.17    29.02    29.02


CCHV=     .300 CEHV=     .500
*SECNO 165.830
3280 CROSS SECTION    165.83 EXTENDED     35.06 FEET


3370 NORMAL BRIDGE, NRD=   4 MIN ELTRD=  1182.38 MAX ELLC=  1121.40

                BEGIN 2-14'X13' RCB
   165.83    60.44  1168.84  1114.29      .00  1169.45      .61      .01      .00  1121.40
    2279.       0.    2279.       0.       0.     364.       0.      29.       3.   1121.40
      .15      .00     6.26      .00     .000     .015     .000     .000  1108.40      .00
  .000791      17.      17.      17.        0       15        0 -1376.21    29.02    29.02


*SECNO 165.230

3301 HV CHANGED MORE THAN HVINS
```

```
  SECNO    DEPTH    CWSEL    CRIWS    WSELK    EG       HV       HL       OLOSS   BANK ELEV
  Q        QLOB     QCH      QROB     ALOB     ACH      AROB     VOL      TWA   LEFT/RIGHT
  TIME     VLOB     VCH      VROB     XNL      XNCH     XNR      WTN      ELMIN      SSTA
  SLOPE    XLOBL    XLCH     XLOBR    ITRIAL   IDC      ICONT    CORAR    TOPWID     ENDST


3370 NORMAL BRIDGE, NRD=  17 MIN ELTRD=  1185.00 MAX ELLC=  1121.00

              END TUNNEL EXIT, BEGIN FIRST TRANSITION -DR. SONG'S STA. 90
  165.23   65.56  1168.56  1112.90      .00  1169.83     1.27      .05      .33  1112.00
   2279.      0.    2279.      0.       0.     252.      0.      29.       3.   1112.00
     .15     .00     9.06     .00     .000     .013     .000     .000  1103.00      .00
 .000854     60.      60.     60.        2       24        0  -891.87    18.00    18.00


CCHV=     .100 CEHV=     .300
*SECNO 162.230

3370 NORMAL BRIDGE, NRD=  17 MIN ELTRD=  1185.00 MAX ELLC=  1121.33

  162.23   65.48  1168.81  1113.23      .00  1170.09     1.27      .26      .00  1112.33
   2279.      0.    2279.      0.       0.     252.      0.      31.       4.   1112.33
     .16     .00     9.06     .00     .000     .013     .000     .000  1103.33      .00
 .000854    300.     300.    300.        0       24        0  -890.38    18.00    18.00
```

THIS RUN EXECUTED 7/26/89 11: 2:51

****
HEC2 RELEASE DATED SEPT 88

****

NOTE- ASTERISK (*) AT LEFT OF CROSS-SECTION NUMBER INDICATES MESSAGE IN SUMMARY OF ERRORS LIST

100-YEAR DISCHARGE IN TU

SUMMARY PRINTOUT

	SECNO	ELMIN	Q	VCH	CRIWS	CWSEL	DEPTH	HV	EG	10*KS	XLCH	TOPWID	CASE
	204.750	1158.00	2331.00	5.50	1163.71	1172.12	14.12	.47	1172.59	2.19	.00	30.00	.00
*	204.750	1158.00	2331.00	13.61	1163.71	1163.71	5.71	2.88	1166.59	28.44	.00	30.00	1.00
	204.740	1156.15	2331.00	4.83	1161.86	1172.24	16.09	.36	1172.60	1.55	1.00	30.00	.00
*	204.740	1156.15	2331.00	8.09	1161.86	1165.76	9.61	1.02	1166.77	6.31	1.00	30.00	16384.00
	203.750	1156.18	2331.00	4.83	1161.89	1172.25	16.07	.36	1172.62	1.55	99.00	30.00	.00
	203.750	1156.18	2331.00	8.05	1161.90	1165.83	9.65	1.01	1166.84	6.24	99.00	30.00	.00
*	203.000	1156.21	2331.00	3.65	1163.31	1172.43	16.22	.21	1172.64	.76	75.00	63.70	16384.00
	203.000	1156.21	2331.00	8.21	1163.32	1165.85	9.64	1.05	1166.90	6.73	75.00	43.94	.00
	200.000	1156.31	2331.00	3.68	1163.41	1172.45	16.14	.21	1172.66	.78	300.00	63.48	.00
	200.000	1156.31	2331.00	8.02	1163.42	1166.10	9.79	1.00	1167.10	6.33	300.00	44.37	.00
	197.000	1156.41	2331.00	3.71	1163.52	1172.48	16.07	.21	1172.69	.79	300.00	63.23	.00
	197.000	1156.41	2331.00	7.87	1163.53	1166.32	9.91	.96	1167.28	6.01	300.00	44.76	.00
	194.000	1156.51	2331.00	3.74	1163.61	1172.50	15.99	.22	1172.71	.81	300.00	62.99	.00
	194.000	1156.51	2331.00	7.74	1163.63	1166.53	10.02	.93	1167.46	5.74	300.00	45.09	.00
	191.000	1156.62	2331.00	3.77	1163.73	1172.52	15.90	.22	1172.74	.83	300.00	62.73	.00
	191.000	1156.62	2331.00	7.66	1163.74	1166.73	10.11	.91	1167.64	5.58	300.00	45.31	.00
	188.000	1156.72	2331.00	3.80	1163.84	1172.54	15.82	.22	1172.77	.85	300.00	62.50	.00
	188.000	1156.72	2331.00	7.54	1163.84	1166.92	10.20	.88	1167.80	5.35	300.00	45.62	.00
	185.000	1156.82	2305.00	3.79	1163.90	1172.57	15.75	.22	1172.79	.85	300.00	62.26	.00
	185.000	1156.82	2305.00	7.34	1163.89	1167.13	10.31	.84	1167.96	5.02	300.00	45.93	.00
	182.000	1156.93	2305.00	3.82	1164.00	1172.59	15.66	.23	1172.82	.87	300.00	62.02	.00
	182.000	1156.93	2305.00	7.29	1164.00	1167.29	10.36	.83	1168.11	4.93	300.00	46.07	.00

	SECNO	ELMIN	Q	VCH	CRIWS	CWSEL	DEPTH	HV	EG	10*KS	XLCH	TOPWID	CASE
	180.750	1156.97	2305.00	3.83	1164.04	1172.60	15.63	.23	1172.83	.87	125.00	61.92	.00
	180.750	1156.97	2305.00	7.26	1164.03	1167.36	10.39	.82	1168.18	4.87	125.00	46.15	.00
*	180.010	1157.00	2305.00	5.12	1162.79	1172.52	15.52	.41	1172.93	1.82	74.00	29.00	16384.00
	180.010	1157.00	2305.00	7.68	1162.80	1167.35	10.35	.92	1168.26	5.47	74.00	29.00	.00
*	180.000	1157.00	2279.00	6.26	1162.89	1172.42	15.42	.61	1173.03	7.91	1.00	28.99	16384.00
	180.000	1157.00	2279.00	7.89	1162.89	1167.32	10.32	.97	1168.29	9.44	1.00	27.99	.00
	179.500	1152.25	2279.00	6.26	1158.14	1172.46	20.21	.61	1173.07	7.91	50.00	29.00	.00
	179.500	1152.25	2279.00	6.26	1158.14	1167.76	15.51	.61	1168.37	7.91	50.00	28.99	.00
	179.000	1147.50	2279.00	6.26	1153.39	1172.50	25.00	.61	1173.11	7.91	50.00	29.01	.00
	179.000	1147.50	2279.00	6.26	1153.39	1167.80	20.30	.61	1168.41	7.91	50.00	29.00	.00
	178.500	1142.75	2279.00	6.26	1148.64	1172.54	29.79	.61	1173.15	7.91	50.00	29.01	.00
	178.500	1142.75	2279.00	6.26	1148.64	1167.84	25.09	.61	1168.45	7.91	50.00	29.01	.00
	178.000	1138.00	2279.00	6.26	1143.89	1172.58	34.58	.61	1173.19	7.91	50.00	29.01	.00
	178.000	1138.00	2279.00	6.26	1143.89	1167.88	29.88	.61	1168.49	7.91	50.00	29.01	.00
	176.000	1137.75	2279.00	6.26	1143.64	1172.74	34.99	.61	1173.35	7.91	200.00	29.01	.00
	176.000	1137.75	2279.00	6.26	1143.64	1168.03	30.28	.61	1168.64	7.91	200.00	29.01	.00
	174.000	1137.50	2279.00	6.26	1143.39	1172.90	35.40	.61	1173.50	7.91	200.00	29.01	.00
	174.000	1137.50	2279.00	6.26	1143.39	1168.19	30.69	.61	1168.80	7.91	200.00	29.01	.00
	172.000	1137.25	2279.00	6.26	1143.14	1173.05	35.80	.61	1173.66	7.91	200.00	29.01	.00
	172.000	1137.25	2279.00	6.26	1143.14	1168.35	31.10	.61	1168.96	7.91	200.00	29.01	.00
	170.000	1137.00	2279.00	6.26	1142.89	1173.21	36.21	.61	1173.82	7.91	200.00	29.01	.00
	170.000	1137.00	2279.00	6.26	1142.89	1168.51	31.51	.61	1169.12	7.91	200.00	29.01	.00
	169.000	1136.87	2279.00	6.26	1142.76	1173.29	36.42	.61	1173.90	7.91	100.00	29.01	.00
	169.000	1136.87	2279.00	6.26	1142.76	1168.59	31.72	.61	1169.20	7.91	100.00	29.01	.00
	168.500	1132.37	2279.00	6.26	1138.26	1173.33	40.96	.61	1173.94	7.91	50.00	29.01	.00
	168.500	1132.37	2279.00	6.26	1138.26	1168.63	36.26	.61	1169.24	7.91	50.00	29.01	.00
	168.000	1127.87	2279.00	6.26	1133.76	1173.37	45.50	.61	1173.98	7.91	50.00	29.01	.00
	168.000	1127.87	2279.00	6.26	1133.76	1168.67	40.80	.61	1169.28	7.91	50.00	29.01	.00
	167.500	1123.37	2279.00	6.26	1129.26	1173.41	50.04	.61	1174.02	7.91	50.00	29.01	.00
	167.500	1123.37	2279.00	6.26	1129.26	1168.71	45.34	.61	1169.32	7.91	50.00	29.01	.00
	167.000	1118.87	2279.00	6.26	1124.76	1173.45	54.58	.61	1174.06	7.91	50.00	29.02	.00
	167.000	1118.87	2279.00	6.26	1124.76	1168.75	49.88	.61	1169.36	7.91	50.00	29.01	.00
	166.500	1114.37	2279.00	6.26	1120.26	1173.49	59.12	.61	1174.10	7.91	50.00	29.02	.00
	166.500	1114.37	2279.00	6.26	1120.26	1168.79	54.42	.61	1169.40	7.91	50.00	29.02	.00

SECNO	ELMIN	Q	VCH	CRIWS	CWSEL	DEPTH	HV	EG	10*KS	XLCH	TOPWID	CASE
166.000	1109.87	2279.00	6.26	1115.76	1173.53	63.66	.61	1174.14	7.91	50.00	29.02	.00
166.000	1109.87	2279.00	6.26	1115.76	1168.83	58.96	.61	1169.44	7.91	50.00	29.02	.00
165.830	1108.40	2279.00	6.26	1114.29	1173.54	65.14	.61	1174.15	7.91	17.00	29.02	.00
165.830	1108.40	2279.00	6.26	1114.29	1168.84	60.44	.61	1169.45	7.91	17.00	29.02	.00
165.230	1103.00	2279.00	9.06	1112.90	1173.26	70.26	1.27	1174.53	8.54	60.00	18.00	.00
165.230	1103.00	2279.00	9.06	1112.90	1168.56	65.56	1.27	1169.83	8.54	60.00	18.00	.00
162.230	1103.33	2279.00	9.06	1113.23	1173.51	70.18	1.27	1174.79	8.54	300.00	18.00	.00
162.230	1103.33	2279.00	9.06	1113.23	1168.81	65.48	1.27	1170.09	8.54	300.00	18.00	.00

SUMMARY OF ERRORS AND SPECIAL NOTES

CAUTION SECNO= 204.750 PROFILE= 2 CRITICAL DEPTH ASSUMED

WARNING SECNO= 204.740 PROFILE= 2 CONVEYANCE CHANGE OUTSIDE ACCEPTABLE RANGE

WARNING SECNO= 203.000 PROFILE= 1 CONVEYANCE CHANGE OUTSIDE ACCEPTABLE RANGE

WARNING SECNO= 180.010 PROFILE= 1 CONVEYANCE CHANGE OUTSIDE ACCEPTABLE RANGE

WARNING SECNO= 180.000 PROFILE= 1 CONVEYANCE CHANGE OUTSIDE ACCEPTABLE RANGE

ALTERNATIVE 3 HEC-2 MODEL

```
****************************************************
*  WATER SURFACE PROFILES                          *
*  DEVELOPED BY THE COE                            *
*  VERSION OF SEPTEMBER 1988                       *
*                                                  *
*  RUN DATE     7/31/89   TIME   17:32:30          *
****************************************************
```

```
*************************************
*  DODSON AND ASSOCIATES, INC.      *
*  HYDROLOGIST AND CIVIL ENGINEERS  *
*  7015 W TIDWELL SUITE 107         *
*  HOUSTON, TEXAS 77092             *
*  (713) 895-8322                   *
*************************************
```

```
X     X  XXXXXXX   XXXXX             XXXXX
X     X  X        X     X           X     X
X     X  X        X                       X
XXXXXXX  XXXX     X         XXXXX    XXXXX
X     X  X        X                 X
X     X  X        X     X           X
X     X  XXXXXXX   XXXXX             XXXXXXX
```

END OF BANNER

THIS RUN EXECUTED 7/31/89 17:32:30

```
**************************************************
 HEC2 RELEASE DATED SEPT 88

**************************************************

T1      PRICE ROAD DRAIN EXTENTION AND OUTFALL RESTUDY
T2      SUBCRITICAL RUN WITH BOX CULVERT WITH TEMPORARY OPEN CHANNEL -- ALT. 3
T3      100-YEAR DISCHARGE IN TUNNEL AND 10-YEAR FLOOD IN RIVER

J1  ICHECK    INQ      NINV     IDIR     STRT     METRIC   HVINS    Q        WSEL     FQ

              2                                                          1172.12

J2  NPROF     IPLOT    PRFVS    XSECV    XSECH    FN       ALLDC    IBW      CHNIM    ITRACE

     1                -1                                   -.1


NC      .03       .03       .03       .1        .3
QT        2      2331      2331
              BEGIN ENERGY DISSIPATOR -WEIR AT THE RIVER
X1   204.75         4         0    143.10         0         0         0
GR   1175.0         0   1156.15     56.55   1156.15     86.55    1175.0    143.10

X1   203.00                                     175       175       175                .06

X1   200.00                                     300       300       300                .10

X1   197.00                                     300       300       300                .10

X1   194.00                                     300       300       300                .10

X1   191.00                                     300       300       300                .11

X1   188.00                                     300       300       300                .10

QT        2      2305      2305
X1   185.00                                     300       300       300                .10

X1   182.00                                     300       300       300                .11

NC                                       .3        .5
              BEGIN TEMPORARY OPEN CHANNEL
X1   180.75                                     125       125       125                .04

X1   180.01         4         0        29        74        74        74
GR   1175.0         0    1157.0         0    1157.0        29    1175.0        29
```

```
QT        2      2279      2279
NC     .015      .015      .015
                BEGIN SECOND TRANSITION - FROM RCBC TO TEMPORARY OPEN CHANNEL
X1   180.00        10      0.01        29         1         1         1
BT        4         0   1182.38   1182.38      0.01   1182.38   1170.00        29   1182.38   1170.00
BT    29.01   1182.38   1182.38
GR   1182.4         0    1170.0      0.01   1157.00      0.01   1157.00        14   1170.00        14
GR   1170.0        15    1157.0        15   1157.00        29   1170.00        29   1182.38     29.01

NC                                     .1        .3
X1   179.50                                     50        50        50                -4.75
X2                                                                  1

X1   179.00                                     50        50        50                -4.75
X2                                                                  1

X1   178.50                                     50        50        50                -4.75
X2                                                                  1

X1   178.00                                     50        50        50                -4.75
X2                                                                  1

X1   176.00                                    200       200       200                 -.25
X2                                                                  1

X1   174.00                                    200       200       200                 -.25
X2                                                                  1

X1   172.00                                    200       200       200                 -.25
X2                                                                  1

X1   170.00                                    200       200       200                 -.25
X2                                                                  1

X1   169.00                                    100       100       100                 -.13
X2                                                                  1

X1   168.50                                     50        50        50                 -4.5
X2                                                                  1

X1   168.00                                     50        50        50                 -4.5
X2                                                                  1

X1   167.50                                     50        50        50                 -4.5
X2                                                                  1

X1   167.00                                     50        50        50                 -4.5
X2                                                                  1
```

```
X1   166.50                                    50        50        50                  -4.5
X2                                                        1

X1   166.00                                    50        50        50                  -4.5
X2                                                        1

NC                                   .3        .5
                BEGIN 2-14'X13' RCBC
X1   165.83                                    17        17        17                  -1.47
X2                                                        1

NC     .013       .013      .013
                END TUNNEL EXIT, BEGIN FIRST TRANSITION -DR. SONG'S STA. 90
X1   165.23        17       0.01        18        60        60        60
BT      17          0    1185.00   1185.00      0.01   1185.00   1112.00     0.055   1185.00   1113.00
BT   0.515     1185.0     1115.0     1.515   1185.00   1117.00     3.345   1185.00   1119.00     4.877
BT   1185.0     1120.0     6.042    1185.0   1120.50     9.000   1185.00   1121.00    11.958   1185.00
BT   1120.5     13.123    1185.0    1120.0    14.655   1185.00   1119.00    16.485   1185.00   1117.00
BT   17.485     1185.0     1115.0    17.945   1185.00   1113.00    18.000   1185.00   1112.00    18.010
BT   1185.0     1112.0
GR   1185.0          0     1112.0      0.01   1111.00     0.055   1109.00     0.515   1107.00     1.515
GR   1105.0      3.345     1104.0     4.877   1103.50     6.042   1103.00     9.000   1103.50    11.958
GR   1104.0     13.123     1105.0    14.655   1107.00    16.485   1109.00    17.485   1111.00    17.945
GR   1112.0     18.000    1185.00    18.001

NC                                   .1        .3
X1   162.23                                   300       300       300                   .33
X2                                                        1
```

```
   SECNO    DEPTH    CWSEL    CRIWS    WSELK    EG       HV       HL       OLOSS   BANK ELEV
   Q        QLOB     QCH      QROB     ALOB     ACH      AROB     VOL      TWA   LEFT/RIGHT
   TIME     VLOB     VCH      VROB     XNL      XNCH     XNR      WTN      ELMIN      SSTA
   SLOPE    XLOBL    XLCH     XLOBR    ITRIAL   IDC      ICONT    CORAR    TOPWID     ENDST


*PROF 1

CRITICAL DEPTH TO BE CALCULATED AT ALL CROSS SECTIONS
ALLOWABLE ERROR FOR CRITICAL DEPTH DETERMINATION (ALLDC) =   .100 PERCENT OF THE DEPTH
0

CCHV=     .100 CEHV=     .300
*SECNO 204.750
                BEGIN ENERGY DISSIPATOR -WEIR AT THE RIVER
   204.75    15.97  1172.12  1160.98  1172.12  1172.17      .05      .00      .00  1175.00
    2331.       0.    2331.       0.       0.    1244.       0.       0.       0.  1175.00
      .00      .00     1.87      .00     .000     .030     .000     .000  1156.15     8.64
  .000071       0.       0.       0.        0       22        0      .00   125.82   134.46


*SECNO 203.000
   203.00    15.92  1172.13  1161.04      .00  1172.19      .06      .01      .00  1175.06
    2331.       0.    2331.       0.       0.    1238.       0.       5.       1.  1175.06
      .03      .00     1.88      .00     .000     .030     .000     .000  1156.21     8.78
  .000072     175.     175.     175.        0       23        0      .00   125.53   134.32


*SECNO 200.000
   200.00    15.84  1172.15  1161.14      .00  1172.21      .06      .02      .00  1175.16
    2331.       0.    2331.       0.       0.    1228.       0.      13.       1.  1175.16
      .07      .00     1.90      .00     .000     .030     .000     .000  1156.31     9.02
  .000074     300.     300.     300.        0       22        0      .00   125.06   134.08


*SECNO 197.000
   197.00    15.77  1172.18  1161.24      .00  1172.23      .06      .02      .00  1175.26
    2331.       0.    2331.       0.       0.    1219.       0.      22.       2.  1175.26
      .11      .00     1.91      .00     .000     .030     .000     .000  1156.41     9.25
  .000075     300.     300.     300.        0       23        0      .00   124.59   133.85


*SECNO 194.000
   194.00    15.69  1172.20  1161.34      .00  1172.25      .06      .02      .00  1175.36
    2331.       0.    2331.       0.       0.    1209.       0.      30.       3.  1175.36
      .16      .00     1.93      .00     .000     .030     .000     .000  1156.51     9.49
  .000077     300.     300.     300.        0       23        0      .00   124.12   133.61
```

```
  SECNO    DEPTH    CWSEL    CRIWS    WSELK    EG       HV       HL       OLOSS   BANK ELEV
  Q        QLOB     QCH      QROB     ALOB     ACH      AROB     VOL      TWA   LEFT/RIGHT
  TIME     VLOB     VCH      VROB     XNL      XNCH     XNR      WTN      ELMIN      SSTA
  SLOPE    XLOBL    XLCH     XLOBR    ITRIAL   IDC      ICONT    CORAR    TOPWID     ENDST


*SECNO 191.000
  191.00    15.60  1172.22  1161.45      .00  1172.28      .06      .02      .00  1175.47
   2331.       0.    2331.       0.       0.    1198.       0.      39.       4.  1175.47
     .20      .00     1.95      .00     .000     .030     .000     .000  1156.62     9.75
 .000079     300.     300.     300.        0       23        0      .00   123.60   133.35


*SECNO 188.000
  188.00    15.52  1172.24  1161.55      .00  1172.30      .06      .02      .00  1175.57
   2331.       0.    2331.       0.       0.    1189.       0.      47.       5.  1175.57
     .24      .00     1.96      .00     .000     .030     .000     .000  1156.72     9.98
 .000080     300.     300.     300.        0       23        0      .00   123.14   133.12


*SECNO 185.000
  185.00    15.45  1172.27  1161.61      .00  1172.33      .06      .02      .00  1175.67
   2305.       0.    2305.       0.       0.    1179.       0.      55.       6.  1175.67
     .28      .00     1.95      .00     .000     .030     .000     .000  1156.82    10.21
 .000080     300.     300.     300.        0       23        0      .00   122.68   132.89


*SECNO 182.000
  182.00    15.36  1172.29  1161.72      .00  1172.35      .06      .02      .00  1175.78
   2305.       0.    2305.       0.       0.    1169.       0.      63.       6.  1175.78
     .33      .00     1.97      .00     .000     .030     .000     .000  1156.93    10.46
 .000082     300.     300.     300.        0       20        0      .00   122.17   132.64


CCHV=     .300 CEHV=     .500
*SECNO 180.750
              BEGIN TEMPORARY OPEN CHANNEL
  180.75    15.33  1172.30  1161.76      .00  1172.36      .06      .01      .00  1175.82
   2305.       0.    2305.       0.       0.    1165.       0.      66.       7.  1175.82
     .34      .00     1.98      .00     .000     .030     .000     .000  1156.97    10.56
 .000083     125.     125.     125.        0       20        0      .00   121.99   132.54


*SECNO 180.010

3302 WARNING:  CONVEYANCE CHANGE OUTSIDE OF ACCEPTABLE RANGE

  180.01    15.13  1172.13  1162.80      .00  1172.56      .43      .01      .18  1175.00
   2305.       0.    2305.       0.       0.     439.       0.      68.       7.  1175.00
     .35      .00     5.25      .00     .000     .030     .000     .000  1157.00      .00
 .000779      74.      74.      74.        2       23        0      .00    29.00    29.00
```

```
  SECNO    DEPTH    CWSEL    CRIWS    WSELK    EG       HV       HL       OLOSS    BANK ELEV
  Q        QLOB     QCH      QROB     ALOB     ACH      AROB     VOL      TWA    LEFT/RIGHT
  TIME     VLOB     VCH      VROB     XNL      XNCH     XNR      WTN      ELMIN      SSTA
  SLOPE    XLOBL    XLCH     XLOBR    ITRIAL   IDC      ICONT    CORAR    TOPWID     ENDST


*SECNO 180.000

3370 NORMAL BRIDGE, NRD=   4 MIN ELTRD=  1182.38 MAX ELLC=  1170.00

              BEGIN SECOND TRANSITION - FROM RCBC TO TEMPORARY OPEN CHANNEL
  180.00    15.04  1172.04  1162.89      .00  1172.65      .61      .00      .09  1170.00
   2279.       0.   2279.       0.       0.     364.       0.      68.       7.   1170.00
     .35      .00     6.26      .00     .000     .015     .000     .000  1157.00      .01
 .000791       1.      1.       1.        2       15        0   -59.20    28.99    29.00


CCHV=     .100 CEHV=     .300
*SECNO 179.500

3370 NORMAL BRIDGE, NRD=   4 MIN ELTRD=  1182.38 MAX ELLC=  1165.25

  179.50    19.83  1172.08  1158.14      .00  1172.69      .61      .04      .00  1165.25
   2279.       0.   2279.       0.       0.     364.       0.      68.       7.   1165.25
     .35      .00     6.26      .00     .000     .015     .000     .000  1152.25      .00
 .000791      50.     50.      50.        0       15        0  -198.07    29.00    29.01


*SECNO 179.000

3370 NORMAL BRIDGE, NRD=   4 MIN ELTRD=  1182.38 MAX ELLC=  1160.50

  179.00    24.62  1172.12  1153.39      .00  1172.73      .61      .04      .00  1160.50
   2279.       0.   2279.       0.       0.     364.       0.      69.       7.   1160.50
     .35      .00     6.26      .00     .000     .015     .000     .000  1147.50      .00
 .000791      50.     50.      50.        0       15        0  -337.00    29.01    29.01


*SECNO 178.500
3280 CROSS SECTION    178.50 EXTENDED      4.03 FEET


3370 NORMAL BRIDGE, NRD=   4 MIN ELTRD=  1182.38 MAX ELLC=  1155.75

  178.50    29.41  1172.16  1148.64      .00  1172.77      .61      .04      .00  1155.75
   2279.       0.   2279.       0.       0.     364.       0.      69.       7.   1155.75
     .35      .00     6.26      .00     .000     .015     .000     .000  1142.75      .00
 .000791      50.     50.      50.        0       15        0  -475.95    29.01    29.01
```

SECNO	DEPTH	CWSEL	CRIWS	WSELK	EG	HV	HL	OLOSS	BANK ELEV
Q	QLOB	QCH	QROB	ALOB	ACH	AROB	VOL	TWA	LEFT/RIGHT
TIME	VLOB	VCH	VROB	XNL	XNCH	XNR	WTN	ELMIN	SSTA
SLOPE	XLOBL	XLCH	XLOBR	ITRIAL	IDC	ICONT	CORAR	TOPWID	ENDST

*SECNO 178.000
3280 CROSS SECTION 178.00 EXTENDED 8.82 FEET

3370 NORMAL BRIDGE, NRD= 4 MIN ELTRD= 1182.38 MAX ELLC= 1151.00

178.00	34.20	1172.20	1143.89	.00	1172.81	.61	.04	.00	1151.00
2279.	0.	2279.	0.	0.	364.	0.	69.	7.	1151.00
.36	.00	6.26	.00	.000	.015	.000	.000	1138.00	.00
.000791	50.	50.	50.	0	15	0	-614.90	29.01	29.01

*SECNO 176.000
3280 CROSS SECTION 176.00 EXTENDED 9.23 FEET

3370 NORMAL BRIDGE, NRD= 4 MIN ELTRD= 1182.38 MAX ELLC= 1150.75

176.00	34.61	1172.36	1143.64	.00	1172.97	.61	.16	.00	1150.75
2279.	0.	2279.	0.	0.	364.	0.	71.	7.	1150.75
.37	.00	6.26	.00	.000	.015	.000	.000	1137.75	.00
.000791	200.	200.	200.	0	15	0	-626.74	29.01	29.01

*SECNO 174.000
3280 CROSS SECTION 174.00 EXTENDED 9.64 FEET

3370 NORMAL BRIDGE, NRD= 4 MIN ELTRD= 1182.38 MAX ELLC= 1150.50

174.00	35.02	1172.52	1143.39	.00	1173.13	.61	.16	.00	1150.50
2279.	0.	2279.	0.	0.	364.	0.	73.	7.	1150.50
.37	.00	6.26	.00	.000	.015	.000	.000	1137.50	.00
.000791	200.	200.	200.	0	15	0	-638.58	29.01	29.01

*SECNO 172.000
3280 CROSS SECTION 172.00 EXTENDED 10.04 FEET

3370 NORMAL BRIDGE, NRD= 4 MIN ELTRD= 1182.38 MAX ELLC= 1150.25

172.00	35.42	1172.67	1143.14	.00	1173.28	.61	.16	.00	1150.25
2279.	0.	2279.	0.	0.	364.	0.	74.	7.	1150.25
.38	.00	6.26	.00	.000	.015	.000	.000	1137.25	.00
.000791	200.	200.	200.	0	15	0	-650.43	29.01	29.01

```
  SECNO    DEPTH    CWSEL    CRIWS    WSELK    EG       HV       HL       OLOSS   BANK ELEV
  Q        QLOB     QCH      QROB     ALOB     ACH      AROB     VOL      TWA   LEFT/RIGHT
  TIME     VLOB     VCH      VROB     XNL      XNCH     XNR      WTN      ELMIN      SSTA
  SLOPE    XLOBL    XLCH     XLOBR    ITRIAL   IDC      ICONT    CORAR    TOPWID     ENDST


*SECNO 170.000
3280 CROSS SECTION    170.00 EXTENDED     10.45 FEET


3370 NORMAL BRIDGE, NRD=   4 MIN ELTRD=  1182.38 MAX ELLC=  1150.00

  170.00    35.83  1172.83  1142.89      .00  1173.44      .61      .16      .00  1150.00
   2279.       0.    2279.       0.       0.     364.       0.      76.       8.  1150.00
     .39      .00     6.26      .00     .000     .015     .000     .000  1137.00      .00
 .000791     200.     200.     200.        0       15        0  -662.27    29.01    29.01


*SECNO 169.000
3280 CROSS SECTION    169.00 EXTENDED     10.66 FEET


3370 NORMAL BRIDGE, NRD=   4 MIN ELTRD=  1182.38 MAX ELLC=  1149.87

  169.00    36.04  1172.91  1142.76      .00  1173.52      .61      .08      .00  1149.87
   2279.       0.    2279.       0.       0.     364.       0.      77.       8.  1149.87
     .40      .00     6.26      .00     .000     .015     .000     .000  1136.87      .00
 .000791     100.     100.     100.        0       15        0  -668.34    29.01    29.01


*SECNO 168.500
3280 CROSS SECTION    168.50 EXTENDED     15.20 FEET


3370 NORMAL BRIDGE, NRD=   4 MIN ELTRD=  1182.38 MAX ELLC=  1145.37

  168.50    40.58  1172.95  1138.26      .00  1173.56      .61      .04      .00  1145.37
   2279.       0.    2279.       0.       0.     364.       0.      77.       8.  1145.37
     .40      .00     6.26      .00     .000     .015     .000     .000  1132.37      .00
 .000791      50.      50.      50.        0       15        0  -800.04    29.01    29.01


*SECNO 168.000
3280 CROSS SECTION    168.00 EXTENDED     19.74 FEET


3370 NORMAL BRIDGE, NRD=   4 MIN ELTRD=  1182.38 MAX ELLC=  1140.87

  168.00    45.12  1172.99  1133.76      .00  1173.60      .61      .04      .00  1140.87
   2279.       0.    2279.       0.       0.     364.       0.      78.       8.  1140.87
     .40      .00     6.26      .00     .000     .015     .000     .000  1127.87      .00
 .000791      50.      50.      50.        0       15        0  -931.75    29.01    29.01
```

```
   SECNO    DEPTH    CWSEL    CRIWS    WSELK    EG       HV       HL       OLOSS   BANK ELEV
   Q        QLOB     QCH      QROB     ALOB     ACH      AROB     VOL      TWA   LEFT/RIGHT
   TIME     VLOB     VCH      VROB     XNL      XNCH     XNR      WTN      ELMIN      SSTA
   SLOPE    XLOBL    XLCH     XLOBR    ITRIAL   IDC      ICONT    CORAR    TOPWID     ENDST


*SECNO 167.500
3280 CROSS SECTION    167.50 EXTENDED     24.28 FEET


3370 NORMAL BRIDGE, NRD=   4 MIN ELTRD=  1182.38 MAX ELLC=  1136.37

   167.50    49.66  1173.03  1129.26      .00  1173.64      .61      .04      .00  1136.37
    2279.       0.    2279.       0.       0.     364.       0.      78.       8.  1136.37
      .40      .00     6.26      .00     .000     .015     .000     .000  1123.37      .00
  .000791      50.      50.      50.        0       15        0 -1063.46    29.01    29.01


*SECNO 167.000
3280 CROSS SECTION    167.00 EXTENDED     28.82 FEET


3370 NORMAL BRIDGE, NRD=   4 MIN ELTRD=  1182.38 MAX ELLC=  1131.87

   167.00    54.20  1173.07  1124.76      .00  1173.68      .61      .04      .00  1131.87
    2279.       0.    2279.       0.       0.     364.       0.      79.       8.  1131.87
      .41      .00     6.26      .00     .000     .015     .000     .000  1118.87      .00
  .000791      50.      50.      50.        0       15        0 -1195.18    29.02    29.02


*SECNO 166.500
3280 CROSS SECTION    166.50 EXTENDED     33.36 FEET


3370 NORMAL BRIDGE, NRD=   4 MIN ELTRD=  1182.38 MAX ELLC=  1127.37

   166.50    58.74  1173.11  1120.26      .00  1173.72      .61      .04      .00  1127.37
    2279.       0.    2279.       0.       0.     364.       0.      79.       8.  1127.37
      .41      .00     6.26      .00     .000     .015     .000     .000  1114.37      .00
  .000791      50.      50.      50.        0       15        0 -1326.90    29.02    29.02


*SECNO 166.000
3280 CROSS SECTION    166.00 EXTENDED     37.90 FEET


3370 NORMAL BRIDGE, NRD=   4 MIN ELTRD=  1182.38 MAX ELLC=  1122.87

   166.00    63.28  1173.15  1115.76      .00  1173.76      .61      .04      .00  1122.87
    2279.       0.    2279.       0.       0.     364.       0.      79.       8.  1122.87
      .41      .00     6.26      .00     .000     .015     .000     .000  1109.87      .00
  .000791      50.      50.      50.        0       15        0 -1458.62    29.02    29.02
```

```
   SECNO    DEPTH    CWSEL    CRIWS    WSELK    EG       HV       HL       OLOSS   BANK ELEV
   Q        QLOB     QCH      QROB     ALOB     ACH      AROB     VOL      TWA   LEFT/RIGHT
   TIME     VLOB     VCH      VROB     XNL      XNCH     XNR      WTN      ELMIN      SSTA
   SLOPE    XLOBL    XLCH     XLOBR    ITRIAL   IDC      ICONT    CORAR    TOPWID     ENDST


CCHV=     .300 CEHV=     .500
*SECNO 165.830
3280 CROSS SECTION    165.83 EXTENDED     39.38 FEET


3370 NORMAL BRIDGE, NRD=   4 MIN ELTRD=  1182.38 MAX ELLC=  1121.40

               BEGIN 2-14'X13' RCBC
   165.83    64.76  1173.16  1114.29      .00  1173.77      .61      .01      .00  1121.40
    2279.       0.    2279.       0.       0.     364.       0.      80.       8.   1121.40
      .41      .00     6.26      .00     .000     .015     .000     .000  1108.40      .00
  .000791      17.      17.      17.        0       15        0 -1501.67    29.02    29.02


*SECNO 165.230

3301 HV CHANGED MORE THAN HVINS


3370 NORMAL BRIDGE, NRD=  17 MIN ELTRD=  1185.00 MAX ELLC=  1121.00

               END TUNNEL EXIT, BEGIN FIRST TRANSITION -DR. SONG'S STA. 90
   165.23    69.88  1172.88  1112.90      .00  1174.15     1.27      .05      .33  1112.00
    2279.       0.    2279.       0.       0.     252.       0.      80.       8.   1112.00
      .41      .00     9.06      .00     .000     .013     .000     .000  1103.00      .00
  .000854      60.      60.      60.        2       24        0  -969.69    18.00    18.00


CCHV=     .100 CEHV=     .300
*SECNO 162.230

3370 NORMAL BRIDGE, NRD=  17 MIN ELTRD=  1185.00 MAX ELLC=  1121.33

   162.23    69.81  1173.14  1113.23      .00  1174.41     1.27      .26      .00  1112.33
    2279.       0.    2279.       0.       0.     252.       0.      82.       8.   1112.33
      .42      .00     9.06      .00     .000     .013     .000     .000  1103.33      .00
  .000854     300.     300.     300.        0       24        0  -968.19    18.00    18.00
```

```
T1      PRICE ROAD DRAIN EXTENTION AND OUTFALL RESTUDY
T2      SUBCRITICAL RUN WITH BOX CULVERT  WITH TEMPORARY OPEN CHANNEL -- ALT. 3
T3      100-YEAR DISCHARGE IN TUNNEL AND NO FLOW IN RIVER

J1  ICHECK    INQ      NINV     IDIR     STRT     METRIC   HVINS    Q        WSEL     FQ

              3                          -1

J2  NPROF     IPLOT    PRFVS    XSECV    XSECH    FN       ALLDC    IBW      CHNIM    ITRACE

    15                -1                                    -.1
```

```
   SECNO    DEPTH    CWSEL    CRIWS    WSELK    EG       HV       HL       OLOSS   BANK ELEV
   Q        QLOB     QCH      QROB     ALOB     ACH      AROB     VOL      TWA   LEFT/RIGHT
   TIME     VLOB     VCH      VROB     XNL      XNCH     XNR      WTN      ELMIN      SSTA
   SLOPE    XLOBL    XLCH     XLOBR    ITRIAL   IDC      ICONT    CORAR    TOPWID     ENDST


*PROF 2

CRITICAL DEPTH TO BE CALCULATED AT ALL CROSS SECTIONS
ALLOWABLE ERROR FOR CRITICAL DEPTH DETERMINATION (ALLDC) =   .100 PERCENT OF THE DEPTH
0

CCHV=     .100 CEHV=     .300
*SECNO 204.750
2096 WSEL NOT GIVEN, AVG OF MAX, MIN USED
3720 CRITICAL DEPTH ASSUMED
               BEGIN ENERGY DISSIPATOR -WEIR AT THE RIVER
   204.75     4.83  1160.98  1160.98      .00  1162.81     1.82      .00      .00  1175.00
    2331.       0.    2331.       0.       0.     215.       0.       0.       0.  1175.00
      .00      .00    10.83      .00     .000     .030     .000     .000  1156.15    42.05
  .008827       0.       0.       0.        0       12        0      .00    59.01   101.05


*SECNO 203.000

3301 HV CHANGED MORE THAN HVINS


3302 WARNING:  CONVEYANCE CHANGE OUTSIDE OF ACCEPTABLE RANGE

   203.00     6.71  1162.92  1161.04      .00  1163.66      .74      .75      .11  1175.06
    2331.       0.    2331.       0.       0.     337.       0.       1.       0.  1175.06
      .01      .00     6.92      .00     .000     .030     .000     .000  1156.21    36.41
  .002521     175.     175.     175.        2        7        0      .00    70.28   106.69


*SECNO 200.000
   200.00     7.43  1163.74  1161.14      .00  1164.30      .56      .61      .02  1175.16
    2331.       0.    2331.       0.       0.     389.       0.       4.       1.  1175.16
      .02      .00     5.99      .00     .000     .030     .000     .000  1156.31    34.24
  .001689     300.     300.     300.        2       25        0      .00    74.62   108.86


*SECNO 197.000
   197.00     7.87  1164.28  1161.24      .00  1164.76      .47      .45      .01  1175.26
    2331.       0.    2331.       0.       0.     422.       0.       6.       1.  1175.26
      .04      .00     5.52      .00     .000     .030     .000     .000  1156.41    32.93
  .001349     300.     300.     300.        2       16        0      .00    77.23   110.17
```

```
  SECNO    DEPTH    CWSEL    CRIWS    WSELK    EG       HV       HL       OLOSS   BANK ELEV
  Q        QLOB     QCH      QROB     ALOB     ACH      AROB     VOL      TWA   LEFT/RIGHT
  TIME     VLOB     VCH      VROB     XNL      XNCH     XNR      WTN      ELMIN     SSTA
  SLOPE    XLOBL    XLCH     XLOBR    ITRIAL   IDC      ICONT    CORAR    TOPWID    ENDST


*SECNO 194.000
  194.00     8.20  1164.71  1161.34      .00  1165.13      .42      .37      .01  1175.36
   2331.       0.    2331.       0.       0.     448.       0.       9.       2.  1175.36
     .05      .00     5.20      .00     .000     .030     .000     .000  1156.51    31.94
 .001145     300.     300.     300.        2       20        0      .00    79.22   111.16


*SECNO 191.000
  191.00     8.45  1165.07  1161.45      .00  1165.46      .38      .32      .00  1175.47
   2331.       0.    2331.       0.       0.     469.       0.      13.       2.  1175.47
     .07      .00     4.97      .00     .000     .030     .000     .000  1156.62    31.17
 .001011     300.     300.     300.        1       16        0      .00    80.77   111.93


*SECNO 188.000
  188.00     8.67  1165.39  1161.54      .00  1165.75      .36      .29      .00  1175.57
   2331.       0.    2331.       0.       0.     486.       0.      16.       3.  1175.57
     .09      .00     4.79      .00     .000     .030     .000     .000  1156.72    30.51
 .000913     300.     300.     300.        0       17        0      .00    82.07   112.59


*SECNO 185.000
  185.00     8.86  1165.68  1161.61      .00  1166.01      .33      .26      .00  1175.67
   2305.       0.    2305.       0.       0.     501.       0.      19.       4.  1175.67
     .10      .00     4.60      .00     .000     .030     .000     .000  1156.82    29.96
 .000821     300.     300.     300.        0       14        0      .00    83.17   113.14


*SECNO 182.000
  182.00     9.01  1165.94  1161.73      .00  1166.25      .31      .24      .00  1175.78
   2305.       0.    2305.       0.       0.     514.       0.      23.       4.  1175.78
     .12      .00     4.48      .00     .000     .030     .000     .000  1156.93    29.51
 .000766     300.     300.     300.        0       12        0      .00    84.09   113.59


CCHV=     .300 CEHV=     .500
*SECNO 180.750
                BEGIN TEMPORARY OPEN CHANNEL
  180.75     9.07  1166.04  1161.77      .00  1166.35      .31      .09      .00  1175.82
   2305.       0.    2305.       0.       0.     519.       0.      24.       4.  1175.82
     .13      .00     4.44      .00     .000     .030     .000     .000  1156.97    29.34
 .000748     125.     125.     125.        0       16        0      .00    84.42   113.76
```

```
   SECNO     DEPTH     CWSEL     CRIWS     WSELK     EG        HV        HL        OLOSS    BANK ELEV
   Q         QLOB      QCH       QROB      ALOB      ACH       AROB      VOL       TWA    LEFT/RIGHT
   TIME      VLOB      VCH       VROB      XNL       XNCH      XNR       WTN       ELMIN       SSTA
   SLOPE     XLOBL     XLCH      XLOBR     ITRIAL    IDC       ICONT     CORAR     TOPWID      ENDST

*SECNO 180.010

3301 HV CHANGED MORE THAN HVINS


3302 WARNING:  CONVEYANCE CHANGE OUTSIDE OF ACCEPTABLE RANGE

   180.01     8.64  1165.64  1162.80      .00  1166.96     1.31      .10      .50  1175.00
    2305.      0.    2305.      0.       0.     251.      0.      25.       4.   1175.00
      .13     .00     9.19     .00     .000     .030     .000     .000  1157.00      .00
  .003620     74.     74.      74.       2       23        0      .00    29.00    29.00


*SECNO 180.000

3265 DIVIDED FLOW


3302 WARNING:  CONVEYANCE CHANGE OUTSIDE OF ACCEPTABLE RANGE


3370 NORMAL BRIDGE, NRD=   4 MIN ELTRD=  1182.38 MAX ELLC=  1170.00

                BEGIN SECOND TRANSITION - FROM RCBC TO TEMPORARY OPEN CHANNEL
   180.00     8.61  1165.61  1162.89      .00  1167.00     1.39      .00      .04  1170.00
    2279.      0.    2279.      0.       0.     241.      0.      25.       4.   1170.00
      .13     .00     9.46     .00     .000     .015     .000     .000  1157.00      .01
  .001506      1.      1.       1.       2       15        0      .00    27.99    29.00


CCHV=     .100 CEHV=     .300
*SECNO 179.500

3301 HV CHANGED MORE THAN HVINS


3370 NORMAL BRIDGE, NRD=   4 MIN ELTRD=  1182.38 MAX ELLC=  1165.25

   179.50    14.27  1166.52  1158.14      .00  1167.13      .61      .05      .08  1165.25
    2279.      0.    2279.      0.       0.     364.      0.      25.       4.   1165.25
      .14     .00     6.26     .00     .000     .015     .000     .000  1152.25      .01
  .000791     50.     50.      50.       2       15        0   -36.79    28.99    29.00
```

```
  SECNO    DEPTH    CWSEL    CRIWS    WSELX    EG       HV       HL       OLOSS    BANK ELEV
  Q        QLOB     QCH      QROB     ALOB     ACH      AROB     VOL      TWA    LEFT/RIGHT
  TIME     VLOB     VCH      VROB     XNL      XNCH     XNR      WTN      ELMIN      SSTA
  SLOPE    XLOBL    XLCH     XLOBR    ITRIAL   IDC      ICONT    CORAR    TOPWID     ENDST


*SECNO 179.000

3370 NORMAL BRIDGE, NRD=   4 MIN ELTRD=  1182.38 MAX ELLC=  1160.50

  179.00    19.06  1166.56  1153.39      .00  1167.17      .61      .04      .00  1160.50
   2279.       0.   2279.       0.       0.     364.       0.      26.       4.  1160.50
     .14      .00     6.26      .00     .000     .015     .000     .000  1147.50      .01
 .000791      50.      50.      50.        1       15        0  -175.93    29.00    29.00


*SECNO 178.500

3370 NORMAL BRIDGE, NRD=   4 MIN ELTRD=  1182.38 MAX ELLC=  1155.75

  178.50    23.85  1166.60  1148.64      .00  1167.21      .61      .04      .00  1155.75
   2279.       0.   2279.       0.       0.     364.       0.      26.       5.  1155.75
     .14      .00     6.26      .00     .000     .015     .000     .000  1142.75      .00
 .000791      50.      50.      50.        0       15        0  -314.58    29.01    29.01


*SECNO 178.000
3280 CROSS SECTION    178.00 EXTENDED      3.26 FEET


3370 NORMAL BRIDGE, NRD=   4 MIN ELTRD=  1182.38 MAX ELLC=  1151.00

  178.00    28.64  1166.64  1143.89      .00  1167.25      .61      .04      .00  1151.00
   2279.       0.   2279.       0.       0.     364.       0.      26.       5.  1151.00
     .14      .00     6.26      .00     .000     .015     .000     .000  1138.00      .00
 .000791      50.      50.      50.        0       15        0  -453.53    29.01    29.01


*SECNO 176.000
3280 CROSS SECTION    176.00 EXTENDED      3.67 FEET


3370 NORMAL BRIDGE, NRD=   4 MIN ELTRD=  1182.38 MAX ELLC=  1150.75

  176.00    29.05  1166.80  1143.64      .00  1167.41      .61      .16      .00  1150.75
   2279.       0.   2279.       0.       0.     364.       0.      28.       5.  1150.75
     .15      .00     6.26      .00     .000     .015     .000     .000  1137.75      .00
 .000791     200.     200.     200.        0       15        0  -465.37    29.01    29.01
```

```
  SECNO    DEPTH    CWSEL    CRIWS    WSELK    EG       HV       HL       OLOSS   BANK ELEV
  Q        QLOB     QCH      QROB     ALOB     ACH      AROB     VOL      TWA   LEFT/RIGHT
  TIME     VLOB     VCH      VROB     XNL      XNCH     XNR      WTN      ELMIN      SSTA
  SLOPE    XLOBL    XLCH     XLOBR    ITRIAL   IDC      ICONT    CORAR    TOPWID     ENDST


*SECNO 174.000
3280 CROSS SECTION    174.00 EXTENDED      4.07 FEET


3370 NORMAL BRIDGE, NRD=   4 MIN ELTRD=  1182.38 MAX ELLC=  1150.50

  174.00    29.45  1166.95  1143.39      .00  1167.56      .61      .16      .00  1150.50
   2279.       0.    2279.       0.       0.     364.       0.      30.       5.  1150.50
     .16      .00     6.26      .00     .000     .015     .000     .000  1137.50      .00
 .000791     200.     200.     200.        0       15        0  -477.21    29.01    29.01


*SECNO 172.000
3280 CROSS SECTION    172.00 EXTENDED      4.48 FEET


3370 NORMAL BRIDGE, NRD=   4 MIN ELTRD=  1182.38 MAX ELLC=  1150.25

  172.00    29.86  1167.11  1143.14      .00  1167.72      .61      .16      .00  1150.25
   2279.       0.    2279.       0.       0.     364.       0.      31.       5.  1150.25
     .17      .00     6.26      .00     .000     .015     .000     .000  1137.25      .00
 .000791     200.     200.     200.        0       15        0  -489.05    29.01    29.01


*SECNO 170.000
3280 CROSS SECTION    170.00 EXTENDED      4.89 FEET


3370 NORMAL BRIDGE, NRD=   4 MIN ELTRD=  1182.38 MAX ELLC=  1150.00

  170.00    30.27  1167.27  1142.89      .00  1167.88      .61      .16      .00  1150.00
   2279.       0.    2279.       0.       0.     364.       0.      33.       5.  1150.00
     .18      .00     6.26      .00     .000     .015     .000     .000  1137.00      .00
 .000791     200.     200.     200.        0       15        0  -500.90    29.01    29.01


*SECNO 169.000
3280 CROSS SECTION    169.00 EXTENDED      5.10 FEET


3370 NORMAL BRIDGE, NRD=   4 MIN ELTRD=  1182.38 MAX ELLC=  1149.87

  169.00    30.48  1167.35  1142.76      .00  1167.96      .61      .08      .00  1149.87
   2279.       0.    2279.       0.       0.     364.       0.      34.       5.  1149.87
     .18      .00     6.26      .00     .000     .015     .000     .000  1136.87      .00
 .000791     100.     100.     100.        0       15        0  -506.96    29.01    29.01
```

```
  SECNO    DEPTH    CWSEL    CRIWS    WSELK    EG       HV       HL       OLOSS   BANK ELEV
  Q        QLOB     QCH      QROB     ALOB     ACH      AROB     VOL      TWA   LEFT/RIGHT
  TIME     VLOB     VCH      VROB     XNL      XNCH     XNR      WTN      ELMIN      SSTA
  SLOPE    XLOBL    XLCH     XLOBR    ITRIAL   IDC      ICONT    CORAR    TOPWID     ENDST


*SECNO 168.500
3280 CROSS SECTION    168.50 EXTENDED      9.64 FEET


3370 NORMAL BRIDGE, NRD=   4 MIN ELTRD=  1182.38 MAX ELLC=  1145.37

  168.50    35.02  1167.39  1138.26      .00  1168.00      .61      .04      .00  1145.37
   2279.       0.    2279.       0.       0.     364.       0.      34.       5.  1145.37
     .18      .00     6.26      .00     .000     .015     .000     .000  1132.37      .00
 .000791      50.      50.      50.        0       15        0  -638.66    29.01    29.01


*SECNO 168.000
3280 CROSS SECTION    168.00 EXTENDED     14.18 FEET


3370 NORMAL BRIDGE, NRD=   4 MIN ELTRD=  1182.38 MAX ELLC=  1140.87

  168.00    39.56  1167.43  1133.76      .00  1168.04      .61      .04      .00  1140.87
   2279.       0.    2279.       0.       0.     364.       0.      35.       5.  1140.87
     .19      .00     6.26      .00     .000     .015     .000     .000  1127.87      .00
 .000791      50.      50.      50.        0       15        0  -770.36    29.01    29.01


*SECNO 167.500
3280 CROSS SECTION    167.50 EXTENDED     18.72 FEET


3370 NORMAL BRIDGE, NRD=   4 MIN ELTRD=  1182.38 MAX ELLC=  1136.37

  167.50    44.10  1167.47  1129.26      .00  1168.08      .61      .04      .00  1136.37
   2279.       0.    2279.       0.       0.     364.       0.      35.       5.  1136.37
     .19      .00     6.26      .00     .000     .015     .000     .000  1123.37      .00
 .000791      50.      50.      50.        0       15        0  -902.07    29.01    29.01


*SECNO 167.000
3280 CROSS SECTION    167.00 EXTENDED     23.26 FEET


3370 NORMAL BRIDGE, NRD=   4 MIN ELTRD=  1182.38 MAX ELLC=  1131.87

  167.00    48.64  1167.51  1124.76      .00  1168.12      .61      .04      .00  1131.87
   2279.       0.    2279.       0.       0.     364.       0.      36.       5.  1131.87
     .19      .00     6.26      .00     .000     .015     .000     .000  1118.87      .00
 .000791      50.      50.      50.        0       15        0 -1033.78    29.01    29.01
```

```
  SECNO    DEPTH    CWSEL    CRIWS    WSELK    EG       HV       HL       OLOSS   BANK ELEV
  Q        QLOB     QCH      QROB     ALOB     ACH      AROB     VOL      TWA   LEFT/RIGHT
  TIME     VLOB     VCH      VROB     XNL      XNCH     XNR      WTN      ELMIN      SSTA
  SLOPE    XLOBL    XLCH     XLOBR    ITRIAL   IDC      ICONT    CORAR    TOPWID     ENDST


*SECNO 166.500
3280 CROSS SECTION    166.50 EXTENDED     27.80 FEET


3370 NORMAL BRIDGE, NRD=   4 MIN ELTRD=  1182.38 MAX ELLC=  1127.37

  166.50    53.18  1167.55  1120.26      .00  1168.16      .61      .04      .00  1127.37
   2279.       0.   2279.       0.       0.     364.       0.      36.       5.  1127.37
     .19      .00     6.26      .00     .000     .015     .000     .000  1114.37      .00
 .000791      50.      50.      50.       0       15        0 -1165.50    29.02    29.02


*SECNO 166.000
3280 CROSS SECTION    166.00 EXTENDED     32.34 FEET


3370 NORMAL BRIDGE, NRD=   4 MIN ELTRD=  1182.38 MAX ELLC=  1122.87

  166.00    57.72  1167.59  1115.76      .00  1168.20      .61      .04      .00  1122.87
   2279.       0.   2279.       0.       0.     364.       0.      37.       5.  1122.87
     .20      .00     6.26      .00     .000     .015     .000     .000  1109.87      .00
 .000791      50.      50.      50.       0       15        0 -1297.22    29.02    29.02


CCHV=     .300 CEHV=     .500
*SECNO 165.830
3280 CROSS SECTION    165.83 EXTENDED     33.82 FEET


3370 NORMAL BRIDGE, NRD=   4 MIN ELTRD=  1182.38 MAX ELLC=  1121.40

              BEGIN 2-14'X13' RCBC
  165.83    59.20  1167.60  1114.29      .00  1168.21      .61      .01      .00  1121.40
   2279.       0.   2279.       0.       0.     364.       0.      37.       5.  1121.40
     .20      .00     6.26      .00     .000     .015     .000     .000  1108.40      .00
 .000791      17.      17.      17.       0       15        0 -1340.26    29.02    29.02


*SECNO 165.230

3301 HV CHANGED MORE THAN HVINS
```

SECNO	DEPTH	CWSEL	CRIWS	WSELK	EG	HV	HL	OLOSS	BANK ELEV
Q	QLOB	QCH	QROB	ALOB	ACH	AROB	VCL	TWA	LEFT/RIGHT
TIME	VLOB	VCH	VROB	XNL	XNCH	XNR	WTN	ELMIN	SSTA
SLOPE	XLOBL	XLCH	XLOBR	ITRIAL	IDC	ICONT	CORAR	TOPWID	ENDST

3370 NORMAL BRIDGE, NRD= 17 MIN ELTRD= 1185.00 MAX ELLC= 1121.00

END TUNNEL EXIT, BEGIN FIRST TRANSITION -DR. SONG'S STA. 90

165.23	64.32	1167.32	1112.90	.00	1168.59	1.27	.05	.33	1112.00
2279.	0.	2279.	0.	0.	252.	0.	37.	5.	1112.00
.20	.00	9.06	.00	.000	.013	.000	.000	1103.00	.00
.000854	60.	60.	60.	2	24	0	-869.57	18.00	18.00

CCHV= .100 CEHV= .300
*SECNO 162.230

3370 NORMAL BRIDGE, NRD= 17 MIN ELTRD= 1185.00 MAX ELLC= 1121.33

162.23	64.24	1167.57	1113.23	.00	1168.85	1.27	.26	.00	1112.33
2279.	0.	2279.	0.	0.	252.	0.	39.	6.	1112.33
.21	.00	9.06	.00	.000	.013	.000	.000	1103.33	.00
.000854	300.	300.	300.	0	24	0	-868.08	18.00	18.00

THIS RUN EXECUTED 7/31/89 17:32:48

****
HEC2 RELEASE DATED SEPT 88

****

NOTE- ASTERISK (*) AT LEFT OF CROSS-SECTION NUMBER INDICATES MESSAGE IN SUMMARY OF ERRORS LIST

100-YEAR DISCHARGE IN TU

SUMMARY PRINTOUT TABLE 150

	SECNO	XLCH	ELTRD	ELLC	ELMIN	Q	CWSEL	CRIWS	EG	10*KS	VCH	AREA	.01K
	204.750	.00	.00	.00	1156.15	2331.00	1172.12	1160.98	1172.17	.71	1.87	1244.22	2764.21
*	204.750	.00	.00	.00	1156.15	2331.00	1160.98	1160.98	1162.81	88.27	10.83	215.16	248.11
	203.000	175.00	.00	.00	1156.21	2331.00	1172.13	1161.04	1172.19	.72	1.88	1238.24	2746.30
*	203.000	175.00	.00	.00	1156.21	2331.00	1162.92	1161.04	1163.66	25.21	6.92	336.62	464.25
	200.000	300.00	.00	.00	1156.31	2331.00	1172.15	1161.14	1172.21	.74	1.90	1228.36	2716.79
	200.000	300.00	.00	.00	1156.31	2331.00	1163.74	1161.14	1164.30	16.89	5.99	389.04	567.26
	197.000	300.00	.00	.00	1156.41	2331.00	1172.18	1161.24	1172.23	.75	1.91	1218.57	2687.65
	197.000	300.00	.00	.00	1156.41	2331.00	1164.28	1161.24	1164.76	13.49	5.52	422.07	634.76
	194.000	300.00	.00	.00	1156.51	2331.00	1172.20	1161.34	1172.25	.77	1.93	1208.90	2658.92
	194.000	300.00	.00	.00	1156.51	2331.00	1164.71	1161.34	1165.13	11.45	5.20	447.93	688.90
	191.000	300.00	.00	.00	1156.62	2331.00	1172.22	1161.45	1172.28	.79	1.95	1198.08	2626.85
	191.000	300.00	.00	.00	1156.62	2331.00	1165.07	1161.45	1165.46	10.11	4.97	468.59	732.96
	188.000	300.00	.00	.00	1156.72	2331.00	1172.24	1161.55	1172.30	.80	1.96	1188.59	2598.83
	188.000	300.00	.00	.00	1156.72	2331.00	1165.39	1161.54	1165.75	9.13	4.79	486.29	771.24
	185.000	300.00	.00	.00	1156.82	2305.00	1172.27	1161.61	1172.33	.80	1.95	1179.24	2571.29
	185.000	300.00	.00	.00	1156.82	2305.00	1165.68	1161.61	1166.01	8.21	4.60	501.47	804.46
	182.000	300.00	.00	.00	1156.93	2305.00	1172.29	1161.72	1172.35	.82	1.97	1168.81	2540.65
	182.000	300.00	.00	.00	1156.93	2305.00	1165.94	1161.73	1166.25	7.66	4.48	514.24	832.67
	180.750	125.00	.00	.00	1156.97	2305.00	1172.30	1161.76	1172.36	.83	1.98	1165.09	2529.72
	180.750	125.00	.00	.00	1156.97	2305.00	1166.04	1161.77	1166.35	7.48	4.44	518.85	842.91
*	180.010	74.00	.00	.00	1157.00	2305.00	1172.13	1162.80	1172.56	7.79	5.25	438.82	825.80
*	180.010	74.00	.00	.00	1157.00	2305.00	1165.64	1162.80	1166.96	36.20	9.19	250.74	383.08

SECNO	XLCH	ELTRD	ELLC	ELMIN	Q	CWSEL	CRIWS	EG	10*KS	VCH	AREA	.01K
180.000	1.00	1182.38	1170.00	1157.00	2279.00	1172.04	1162.89	1172.65	7.91	6.26	363.87	810.26
* 180.000	1.00	1182.38	1170.00	1157.00	2279.00	1165.61	1162.89	1167.00	15.06	9.46	240.93	587.31
179.500	50.00	1182.38	1165.25	1152.25	2279.00	1172.08	1158.14	1172.69	7.91	6.26	363.87	810.26
179.500	50.00	1182.38	1165.25	1152.25	2279.00	1166.52	1158.14	1167.13	7.91	6.26	363.87	810.26
179.000	50.00	1182.38	1160.50	1147.50	2279.00	1172.12	1153.39	1172.73	7.91	6.26	363.87	810.26
179.000	50.00	1182.38	1160.50	1147.50	2279.00	1166.56	1153.39	1167.17	7.91	6.26	363.87	810.26
178.500	50.00	1182.38	1155.75	1142.75	2279.00	1172.16	1148.64	1172.77	7.91	6.26	363.87	810.26
178.500	50.00	1182.38	1155.75	1142.75	2279.00	1166.60	1148.64	1167.21	7.91	6.26	363.87	810.26
178.000	50.00	1182.38	1151.00	1138.00	2279.00	1172.20	1143.89	1172.81	7.91	6.26	363.87	810.26
178.000	50.00	1182.38	1151.00	1138.00	2279.00	1166.64	1143.89	1167.25	7.91	6.26	363.87	810.26
176.000	200.00	1182.38	1150.75	1137.75	2279.00	1172.36	1143.64	1172.97	7.91	6.26	363.87	810.26
176.000	200.00	1182.38	1150.75	1137.75	2279.00	1166.80	1143.64	1167.41	7.91	6.26	363.87	810.26
174.000	200.00	1182.38	1150.50	1137.50	2279.00	1172.52	1143.39	1173.13	7.91	6.26	363.87	810.26
174.000	200.00	1182.38	1150.50	1137.50	2279.00	1166.95	1143.39	1167.56	7.91	6.26	363.87	810.26
172.000	200.00	1182.38	1150.25	1137.25	2279.00	1172.67	1143.14	1173.28	7.91	6.26	363.87	810.26
172.000	200.00	1182.38	1150.25	1137.25	2279.00	1167.11	1143.14	1167.72	7.91	6.26	363.87	810.26
170.000	200.00	1182.38	1150.00	1137.00	2279.00	1172.83	1142.89	1173.44	7.91	6.26	363.87	810.26
170.000	200.00	1182.38	1150.00	1137.00	2279.00	1167.27	1142.89	1167.88	7.91	6.26	363.87	810.26
169.000	100.00	1182.38	1149.87	1136.87	2279.00	1172.91	1142.76	1173.52	7.91	6.26	363.87	810.26
169.000	100.00	1182.38	1149.87	1136.87	2279.00	1167.35	1142.76	1167.96	7.91	6.26	363.87	810.26
168.500	50.00	1182.38	1145.37	1132.37	2279.00	1172.95	1138.26	1173.56	7.91	6.26	363.87	810.26
168.500	50.00	1182.38	1145.37	1132.37	2279.00	1167.39	1138.26	1168.00	7.91	6.26	363.87	810.26
168.000	50.00	1182.38	1140.87	1127.87	2279.00	1172.99	1133.76	1173.60	7.91	6.26	363.87	810.26
168.000	50.00	1182.38	1140.87	1127.87	2279.00	1167.43	1133.76	1168.04	7.91	6.26	363.87	810.26
167.500	50.00	1182.38	1136.37	1123.37	2279.00	1173.03	1129.26	1173.64	7.91	6.26	363.87	810.26
167.500	50.00	1182.38	1136.37	1123.37	2279.00	1167.47	1129.26	1168.08	7.91	6.26	363.87	810.26
167.000	50.00	1182.38	1131.87	1118.87	2279.00	1173.07	1124.76	1173.68	7.91	6.26	363.87	810.26
167.000	50.00	1182.38	1131.87	1118.87	2279.00	1167.51	1124.76	1168.12	7.91	6.26	363.87	810.26
166.500	50.00	1182.38	1127.37	1114.37	2279.00	1173.11	1120.26	1173.72	7.91	6.26	363.87	810.26
166.500	50.00	1182.38	1127.37	1114.37	2279.00	1167.55	1120.26	1168.16	7.91	6.26	363.87	810.26
166.000	50.00	1182.38	1122.87	1109.87	2279.00	1173.15	1115.76	1173.76	7.91	6.26	363.87	810.26
166.000	50.00	1182.38	1122.87	1109.87	2279.00	1167.59	1115.76	1168.20	7.91	6.26	363.87	810.26
165.830	17.00	1182.38	1121.40	1108.40	2279.00	1173.16	1114.29	1173.77	7.91	6.26	363.87	810.26
165.830	17.00	1182.38	1121.40	1108.40	2279.00	1167.60	1114.29	1168.21	7.91	6.26	363.87	810.26

SECNO	XLCH	ELTRD	ELLC	ELMIN	Q	CWSEL	CRIWS	EG	10*KS	VCH	AREA	.01K
165.230	60.00	1185.00	1121.00	1103.00	2279.00	1172.88	1112.90	1174.15	8.54	9.06	251.63	779.67
165.230	60.00	1185.00	1121.00	1103.00	2279.00	1167.32	1112.90	1168.59	8.54	9.06	251.64	779.67
162.230	300.00	1185.00	1121.33	1103.33	2279.00	1173.14	1113.23	1174.41	8.54	9.06	251.63	779.67
162.230	300.00	1185.00	1121.33	1103.33	2279.00	1167.57	1113.23	1168.85	8.54	9.06	251.63	779.67

100-YEAR DISCHARGE IN TU

SUMMARY PRINTOUT TABLE 150

	SECNO	Q	CWSEL	DIFWSP	DIFWSX	DIFKWS	TOPWID	XLCH
	204.750	2331.00	1172.12	.00	.00	.00	125.82	.00
*	204.750	2331.00	1160.98	-11.14	.00	.00	59.01	.00
	203.000	2331.00	1172.13	.00	.01	.00	125.53	175.00
*	203.000	2331.00	1162.92	-9.21	1.94	.00	70.28	175.00
	200.000	2331.00	1172.15	.00	.02	.00	125.06	300.00
	200.000	2331.00	1163.74	-8.41	.82	.00	74.62	300.00
	197.000	2331.00	1172.18	.00	.02	.00	124.59	300.00
	197.000	2331.00	1164.28	-7.89	.54	.00	77.23	300.00
	194.000	2331.00	1172.20	.00	.02	.00	124.12	300.00
	194.000	2331.00	1164.71	-7.48	.43	.00	79.22	300.00
	191.000	2331.00	1172.22	.00	.02	.00	123.60	300.00
	191.000	2331.00	1165.07	-7.14	.36	.00	80.77	300.00
	188.000	2331.00	1172.24	.00	.02	.00	123.14	300.00
	188.000	2331.00	1165.39	-6.85	.32	.00	82.07	300.00
	185.000	2305.00	1172.27	.00	.02	.00	122.68	300.00
	185.000	2305.00	1165.68	-6.58	.29	.00	83.17	300.00
	182.000	2305.00	1172.29	.00	.02	.00	122.17	300.00
	182.000	2305.00	1165.94	-6.35	.26	.00	84.09	300.00
	180.750	2305.00	1172.30	.00	.01	.00	121.99	125.00
	180.750	2305.00	1166.04	-6.26	.10	.00	84.42	125.00
*	180.010	2305.00	1172.13	.00	-.17	.00	29.00	74.00
*	180.010	2305.00	1165.64	-6.49	-.40	.00	29.00	74.00
	180.000	2279.00	1172.04	.00	-.09	.00	28.99	1.00
*	180.000	2279.00	1165.61	-6.43	-.04	.00	27.99	1.00
	179.500	2279.00	1172.08	.00	.04	.00	29.00	50.00
	179.500	2279.00	1166.52	-5.56	.91	.00	28.99	50.00
	179.000	2279.00	1172.12	.00	.04	.00	29.01	50.00
	179.000	2279.00	1166.56	-5.56	.04	.00	29.00	50.00
	178.500	2279.00	1172.16	.00	.04	.00	29.01	50.00
	178.500	2279.00	1166.60	-5.56	.04	.00	29.01	50.00
	178.000	2279.00	1172.20	.00	.04	.00	29.01	50.00
	178.000	2279.00	1166.64	-5.56	.04	.00	29.01	50.00

SECNO	Q	CWSEL	DIFWSP	DIFWSX	DIFKWS	TOPWID	XLCH
176.000	2279.00	1172.36	.00	.16	.00	29.01	200.00
176.000	2279.00	1166.80	-5.56	.16	.00	29.01	200.00
174.000	2279.00	1172.52	.00	.16	.00	29.01	200.00
174.000	2279.00	1166.95	-5.56	.16	.00	29.01	200.00
172.000	2279.00	1172.67	.00	.16	.00	29.01	200.00
172.000	2279.00	1167.11	-5.56	.16	.00	29.01	200.00
170.000	2279.00	1172.83	.00	.16	.00	29.01	200.00
170.000	2279.00	1167.27	-5.56	.16	.00	29.01	200.00
169.000	2279.00	1172.91	.00	.08	.00	29.01	100.00
169.000	2279.00	1167.35	-5.56	.08	.00	29.01	100.00
168.500	2279.00	1172.95	.00	.04	.00	29.01	50.00
168.500	2279.00	1167.39	-5.56	.04	.00	29.01	50.00
168.000	2279.00	1172.99	.00	.04	.00	29.01	50.00
168.000	2279.00	1167.43	-5.56	.04	.00	29.01	50.00
167.500	2279.00	1173.03	.00	.04	.00	29.01	50.00
167.500	2279.00	1167.47	-5.56	.04	.00	29.01	50.00
167.000	2279.00	1173.07	.00	.04	.00	29.02	50.00
167.000	2279.00	1167.51	-5.56	.04	.00	29.01	50.00
166.500	2279.00	1173.11	.00	.04	.00	29.02	50.00
166.500	2279.00	1167.55	-5.56	.04	.00	29.02	50.00
166.000	2279.00	1173.15	.00	.04	.00	29.02	50.00
166.000	2279.00	1167.59	-5.56	.04	.00	29.02	50.00
165.830	2279.00	1173.16	.00	.01	.00	29.02	17.00
165.830	2279.00	1167.60	-5.56	.01	.00	29.02	17.00
165.230	2279.00	1172.88	.00	-.28	.00	18.00	60.00
165.230	2279.00	1167.32	-5.56	-.28	.00	18.00	60.00
162.230	2279.00	1173.14	.00	.26	.00	18.00	300.00
162.230	2279.00	1167.57	-5.56	.26	.00	18.00	300.00

SUMMARY OF ERRORS AND SPECIAL NOTES

```
CAUTION SECNO=    204.750  PROFILE=  2  CRITICAL DEPTH ASSUMED

WARNING SECNO=    203.000  PROFILE=  2  CONVEYANCE CHANGE OUTSIDE ACCEPTABLE RANGE

WARNING SECNO=    180.010  PROFILE=  1  CONVEYANCE CHANGE OUTSIDE ACCEPTABLE RANGE
WARNING SECNO=    180.010  PROFILE=  2  CONVEYANCE CHANGE OUTSIDE ACCEPTABLE RANGE

WARNING SECNO=    180.000  PROFILE=  2  CONVEYANCE CHANGE OUTSIDE ACCEPTABLE RANGE
```

APPENDIX F

DROP STRUCTURES A AND B
HYDRAULIC DESIGN CALCULATIONS

HNTB HOWARD NEEDLES TAMMEN & BERGENDOFF	Made by PGJ	Date 5-29-87	Job No. 11057
	Checked by	Date	Sheet No. 1/1

For OUTER LOOP DRAINAGE TUNNEL PROJECT

DESIGN FLOWS FOR INTERCHANGE STRUCTURES

1) MESA DRAIN DROP STRUCTURE

PEAK Q IN MESA DRAIN FROM HYDROLOGY MODEL (100-YR, 24-HR STORM) IS 1636 cfs

ADD 100 cfs OVERFLOW FROM TEMPE CANAL

DESIGN DISCHARGE FOR DROP STRUCTURE = 1736 cfs

2) CARRIAGE LANE BASIN OUTFLOW DROP SHAFT

DESIGN DISCHARGE = 500 cfs

1-0374-20M

HNTB HOWARD NEEDLES TAMMEN & BERGENDOFF	Made by RAC	Date 5/29/87	Job No. 1105-7-22-03
	Checked by PGJ	Date 6/03/87	Sheet No. 1/2

Calculations For Similitude for Drop Structure
St. Anthony Falls Phoenix Casa Grande Highway

Quantity	RATIO	Scale Relation Ship
Length, L	$L_r = L_m / L_p$	1:21.513
Q	$Q_r = L_r^{5/2}$	1:2247.8

$Q_m = 1736$ CFS* $\qquad Q_p = 2600$ CFS

$$Q_r = \left(\frac{L_m}{L_p}\right)^{5/2}$$

$$Q_m = \left(\frac{L_p}{L_m}\right)^{2/5} = \left(\frac{1736}{2600}\right)^{2/5} = .8508$$

$$L_{1736} = L_{2600}\left(\frac{1736}{2600}\right)^{2/5}$$

Similitude ratio, Drop Structure dimensions and Drop Structure configuration are from: "Phoenix-Casa Grande Highway Stormwater Interceptor Drop Structures Model Studies" Final Report, February, 1985 by Warren Q Dahlin and Joseph M. Wetzel; University of Minnesota Saint Anthony Falls Hydraulic Laboratory, Conducted for PRC Engineering, Sponsored by Arizona Department of Transportation and Howard Needles Tammen and Bergendoff.

*New Flow given by PJ on 5/29/87

ME111-1074-5M

HNTB HOWARD NEEDLES TAMMEN & BERGENDOFF	Made by RAC	Date 6/03/87	Job No. 11087-22-02-207
	Checked by PGJ	Date 6/03/87	Sheet No. 2/2

Calculations For Similude Lengths for Drop Structure

(1) DIAMETER OF TUNNEL	GIVEN	18'	(1)
(2) DEAERATION CHAMBER	134 X .85 = 113.90	114'	(2)
(3) LENGTH FR. DROP STRUCTURE TO BEGINNING OF CEILING AIR SLOTS	33 X .85 = 28.05	28	(3)
(4) TOTAL AIR SLOTS SPACE LGTH	62 X .85 = 52.7		
NO OF AIR SLOTS	52.7 ÷ 4 = 13.175		
CHECK			
AIR SLOT WIDTH 2'	13 = 26		
BEAMS BETWEEN SLOTS 2'	14 = 28		
TOTAL LENGTH	54	54'	(4)
(5) LENGTH FR. END OF AIR SLOTS	114 - 54 - 28 = 32'	32'	(5)
CHECK	39 X .85 = 33'		
(6) WEIR	5.75 X .85 = 4.88	4.9'	(6)
(7) SLOT IN WEIR	0.91 X .85 = .77	0.75	(7)
(8) BOTTOM OPENING DIAPHRAM WALL	11 X .85 = 9.35	9.4	(8)
(9) BOOT DIMENSION	4' INCREASE TO 8' BECAUSE OF 60' DROP	8'	(9)
(10) AIR VENT	2.5' (STAY THE SAME)	2.5'	(10)
(11) WALL & CEILING - DEFINING VENT	1.5 STAY THE SAME	1.5'	(11)
(12) HOOD	6.25 X .85	5.3'	(12)
(13) DIAMETER OF SHAFT	25' X .85 = 21.24		
APPROXIMATE INCOMING AREA FROM DITCH (SEE NOTE 3-19-87)	204' X 2 = 408 = πr^2		
	r = 11.4 D = 22.8 SAFE	24'	(13)
(14) DISTANCE FR. SHAFT TO INSIDE DIAPHRAM WALL	13 X .85 = 11.05	11	(14)

ME111-1074-5M

University of Minnesota
St. Anthony Falls Hydraulic Laboratory
Minneapolis, Minnesota

FINAL REPORT

PHOENIX-CASA GRANDE HIGHWAY

STORMWATER INTERCEPTOR

DROP STRUCTURES MODEL STUDIES

February, 1985

by

Warren Q. Dahlin

and Joseph M. Wetzel

Conducted for

PRC ENGINEERING
Denver, Colorado and Phoenix, Arizona

Sponsored by

ARIZONA DEPARTMENT OF TRANSPORTATION
Phoenix, Arizona

HOWARD NEEDLES TAMMEN AND BERGENDOFF
Phoenix, Arizona
Management Consultant

tion changes were made during a particular test. For the surge tests, a particular steady-state discharge was established with the tailwater uncontrolled; then, the tailwater control valve was manually closed as fast as possible to the fully closed position. Visual observations and photo documentation were made of the structure filling and the surging that occurred. For selected types, pressure fluctuations were recorded on the sump invert beneath the dropshaft during the test procedure.

In both the prototype and the model, gravity is the predominant motion-producing force. For this type of system the greatest degree of dynamic similarity is obtained when the model-prototype relationships are established by the Froude law. The following expressions were used to convert dimensions and hydraulic quantities from model to prototype or vice versa. The letter L is the length in ft, Q the discharge in cfs, V the velocity in fps, P the pressure head in ft, T the time, f the frequency. The subscripts m and p refer to model and prototype, respectively, and the subscript r denotes the ratio of model to prototype.

Quantity	Ratio	Scale Relation
Length, L	$L_r = L_m/L_p$	1:21.913
Discharge, Q	$Q_r = L_r^{5/2}$	1:2247.8
Velocity, V	$V_r = L_r^{1/2}$	1:4.681
Pressure, P	$P_r = L_r$	1:21.91
Time, T	$T_r = L_r^{1/2}$	1:4.681
Frequency, f	$f_r = 1/L_r^{1/2}$	1:0.2136

For example if the velocity is 1.0 fps, the corresponding velocity in the prototype will be 4.681 fps.

Complete similarity for the air entrainment and air removal processes cannot in general be obtained because the mechanism of entrainment, the size of bubbles, and the relative movement of the bubbles through the water are subject to forces other than gravity and depend more on such forces as surface tension and viscosity. However, the processes are qualitatively similar, and it is believed that the observations made in the model regarding the flow characteristics of the aerated mixture will be qualitatively correct. When the model indicates a large amount of air entrainment in the inlet and vertical shaft and effective air removal in the sump and deaeration chamber, the prototype behavior is expected to be similar, even though the quantities of air do not obey Froude law scaling.

The basic model designated DS3 (drop structure No. 3) consisted of a deep sump at Elevation 1022, 63-foot long transition and 106-foot long deaeration chamber. Twelve air slots in the ceiling of the deaeration

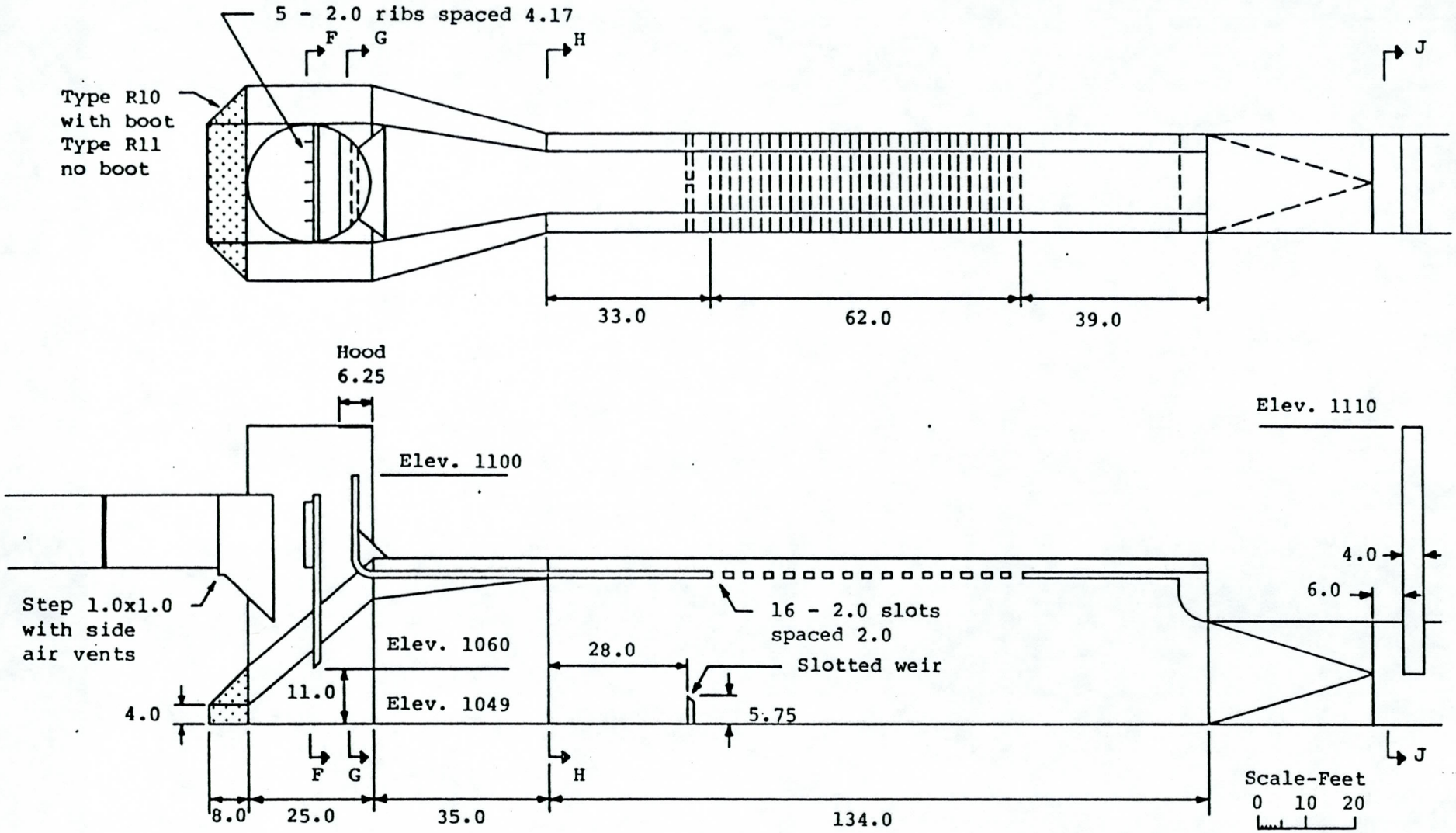

Types DS3 R10 and R11 Drop Structures are the same as Type DS3 with changes noted.
Model Scale 1:21.91

PHOENIX DROP STRUCTURES
MODEL STUDIES
Types DS3 R10 and R11 Drop Structures
Drop Structure Types Tested

SAINT ANTHONY FALLS HYDRAULIC LABORATORY UNIVERSITY OF MINNESOTA		
DRAWN AG	CHECKED	APPROVED
SCALE	DATE 1/23/85	NO. 346A2324-44

CHART 9

3 of 6

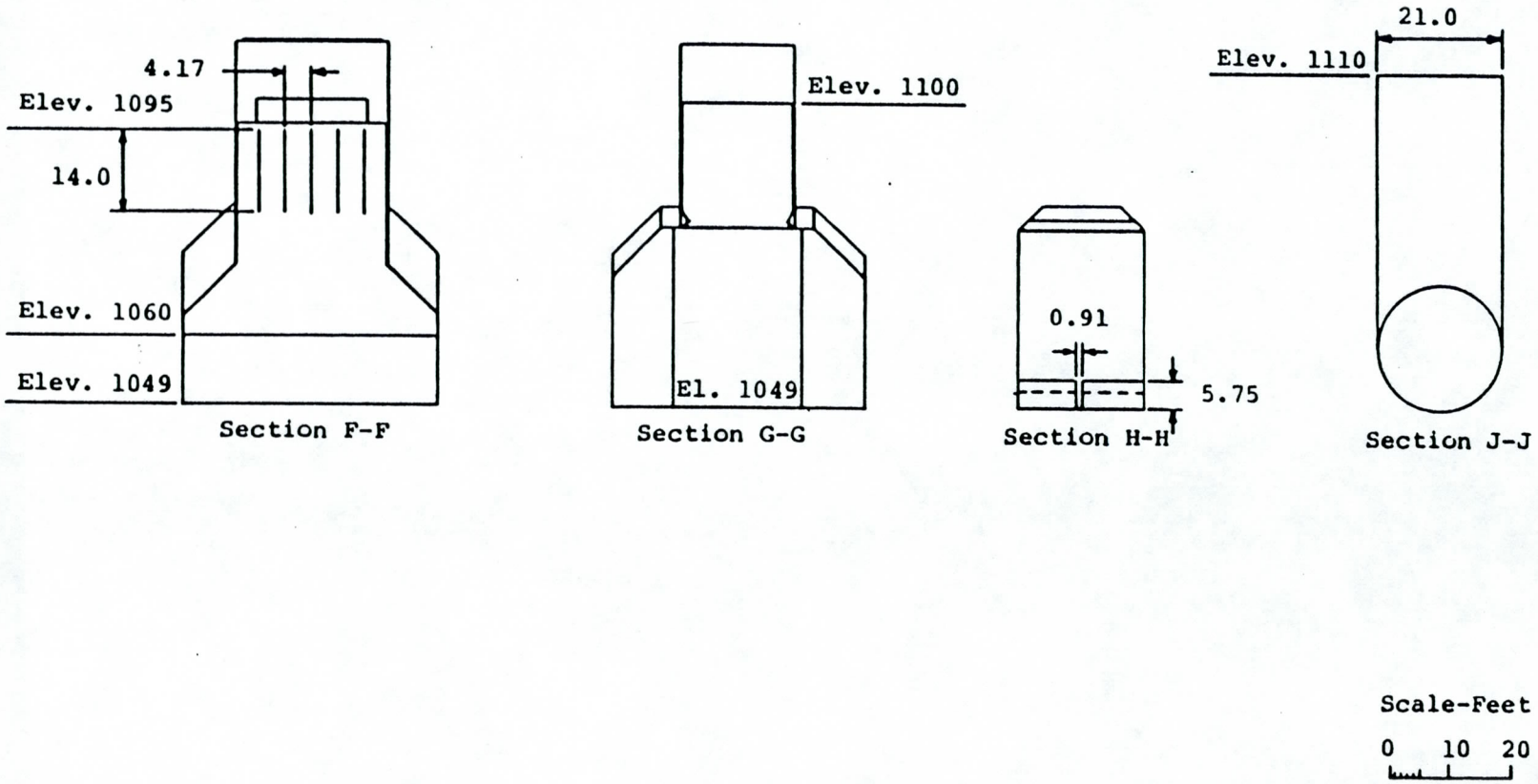

Types DS3 R10 and R11 Drop Structures are the same as Type DS3 with changes noted.
Model Scale 1:21.91

PHOENIX DROP STRUCTURES
MODEL STUDIES
Types DS3 R10 and R11 Drop Structures
Drop Structure Types Tested

SAINT ANTHONY FALLS HYDRAULIC LABORATORY UNIVERSITY OF MINNESOTA		
DRAWN AG	CHECKED	APPROVED
SCALE	DATE 1/23/85	NO. 346A2324-45

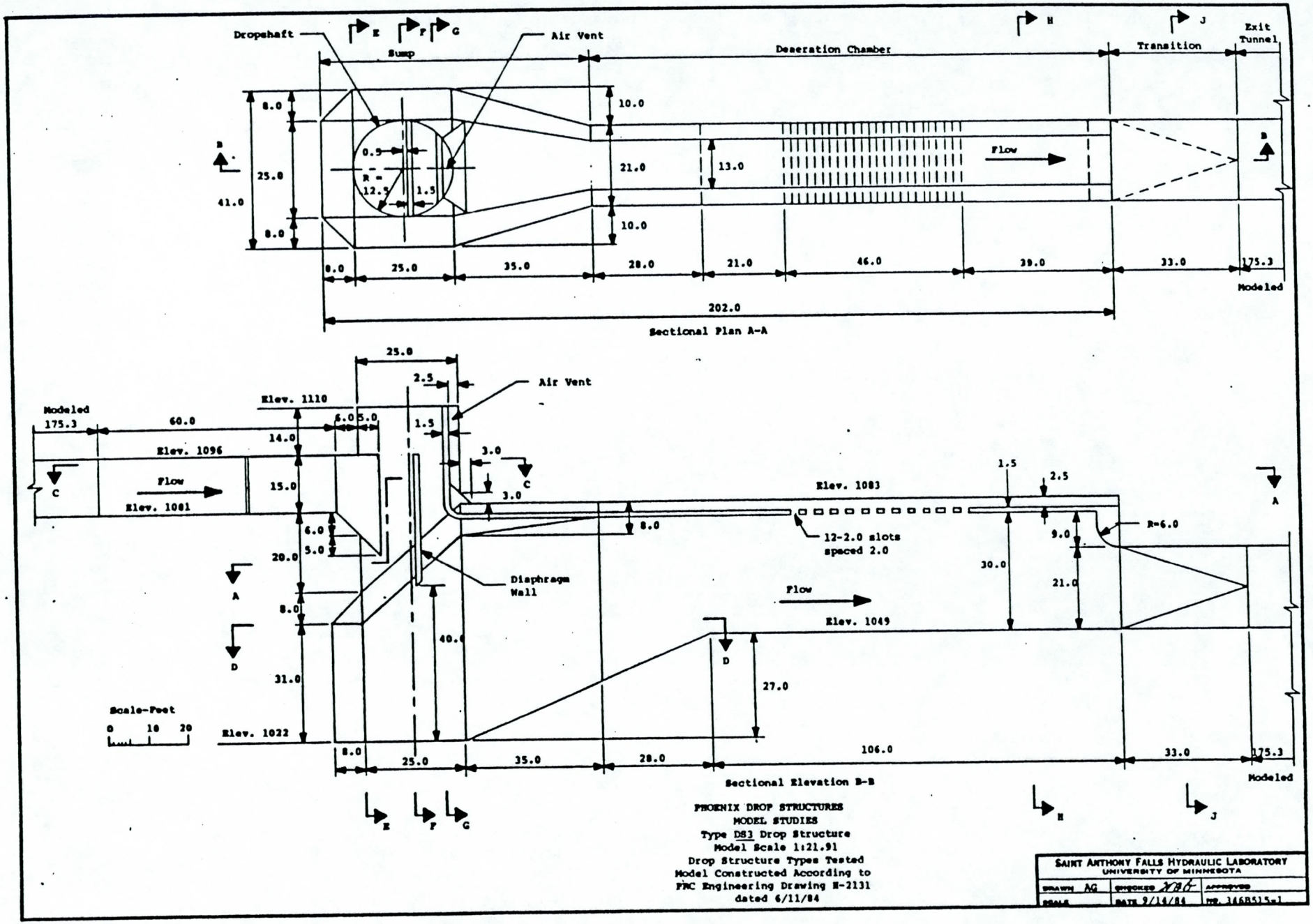
Dropshaft
Air Vent
Sump
Deaeration Chamber
Transition
Exit Tunnel
Flow
Modeled
Sectional Plan A-A
Elev. 1110
Elev. 1096
Elev. 1081
Elev. 1083
Elev. 1049
Elev. 1022
Diaphragm Wall
12-2.0 slots spaced 2.0
R=6.0
Scale-Feet
Sectional Elevation B-B
PHOENIX DROP STRUCTURES
MODEL STUDIES
Type DS3 Drop Structure
Model Scale 1:21.91
Drop Structure Types Tested
Model Constructed According to
FRC Engineering Drawing H-2131
dated 6/11/84
SAINT ANTHONY FALLS HYDRAULIC LABORATORY
UNIVERSITY OF MINNESOTA
DRAWN AG
CHECKED
APPROVED
SCALE
DATE 9/14/84
NO. 3468515-1

CHART 1

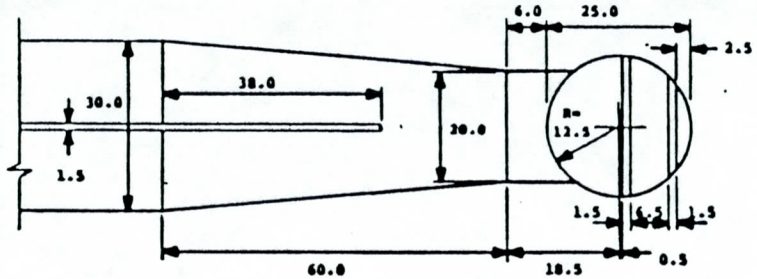

Section Plan C-C

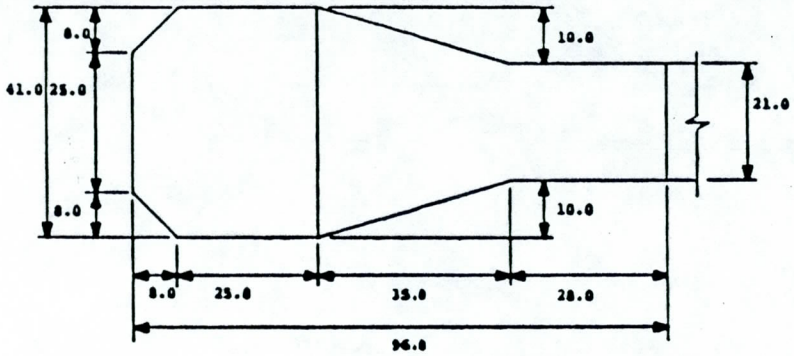

Section D-D

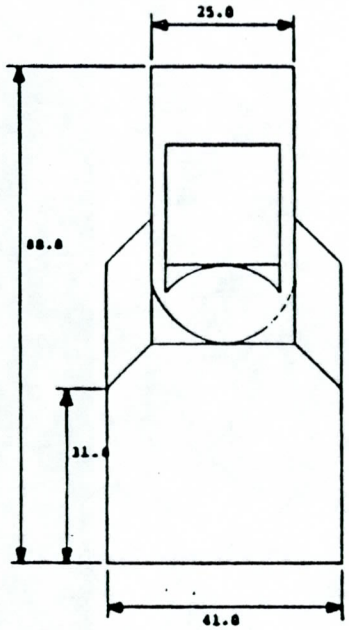

Section E-E

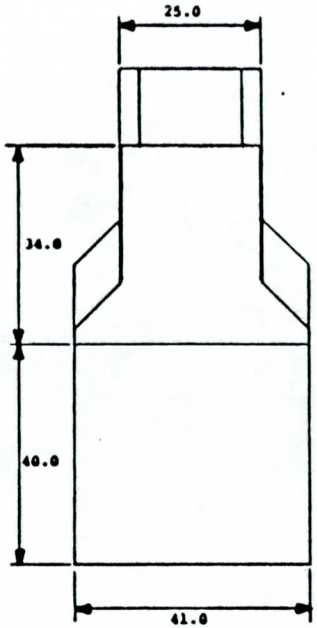

Section F-F

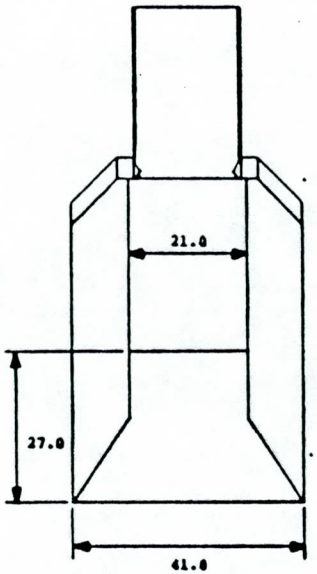

Section G-G

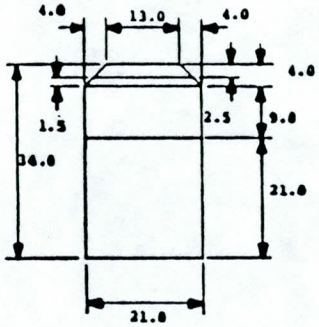

Section H-H

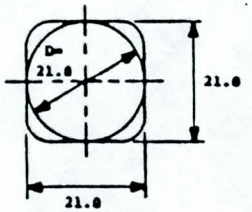

Section J-J

0 10 20

Scale-feet

PHOENIX DROP STRUCTURES
MODEL STUDIES
Type D(1) Drop Structure
Model Scale 1:21:91
Drop Structure Types Tested
Model Constructed According to
PRC Engineering Drawing M-2111
dated 6/11/84

SAINT ANTHONY FALLS HYDRAULIC LABORATORY UNIVERSITY OF MINNESOTA		
DRAWN AG	CHECKED	APPROVED
SCALE	DATE 9/14/84	NO. 3468515-2

CHART 2

6 of 6

HNTB
HOWARD NEEDLES TAMMEN & BERGENDOFF

RECORD OF TELEPHONE CALL

Date: 5/29/87
Job No.: 11057

TO Warren Dahlin (612) 627-4010 4580 - Direct # OF St. Anthony Falls Lab.

FROM RES OF HNTB

SUBJECT DISCUSSED was the possibility of combining Mesa Drain & Carriage Lane Basin sewer in one drop structure.

Questions asked were:

1) Time for flow to stabilize in tunnel downstream of deaeration chamber?
2) Can deaeration structure be placed on curve?
3) Can flow enter drop structure at an angle?
4) Can dual entries be used?

ACTION TO BE TAKEN

Mr. Dahlin's replies:

1) More than 3-4 tunnel diameters.
2) He would expect problems due to different velocities across chamber.
3) He would anticipate added vorticity in sump.
4) Surging would probably occur in lower pipe.

Copy to: PGJ, RWL

NOTE: This record is to be retained in the file.

GN119-574-5M

HNTB
HOWARD NEEDLES TAMMEN & BERGENDOFF

RECORD OF TELEPHONE CALL

Date: 6/4/87
Job No.: 11057-23-02

TO Warren Dahlin OF St. Anthony Falls

FROM RES OF HNTB

SUBJECT DISCUSSED Questions for Mr. Dahlin:

1) Increase drop from 30 as modeled to 60' proposed?
2) Increase height of boot from 4' (model) to 8' (prototype).
3) Increase width of approach channel to equal diameter of shaft.

ACTION TO BE TAKEN

Mr. Dahlin's Replies:

1) Maximum drop for this type of structure is 70'. Above that use an elbow.
2) No problem.
3) Would not comment--suggested modeling. Model is still set up and could be easily modified.

cc: PGJ, RWL

NOTE: This record is to be retained in the file.
GN119-574-5M

HNTB HOWARD NEEDLES TAMMEN & BERGENDOFF	Made by PGJ	Date 6-3-87	Job No. 11057
	Checked by	Date	Sheet No. 1/2

For DROPSHAFT #6 – TYPE OF STRUCTURE

FOR MORE EFFICIENT HYDRAULICS, PROPOSED STRUCTURE AT SR360 INTERCHANGE HAS BEEN "SPLIT" INTO TWO STRUCTURES

1) STANDARD PLUNGE TYPE DROP STRUCTURE FOR MESA DRAIN FLOWS:
(Inlet elevation of ~1181, Design Q = 1736 cfs)
- Base design on Saint Anthony Falls Hydraulic Lab (SAFHL) I-10 study (Moreland-type structure, Design Q = 2600 cfs)

2) DROPSHAFT FOR CARRIAGE LANE BASIN OUTFLOW PIPE:
(Inlet elevation of ~1164, Design Q = 500 cfs)
- Base on I-10 "Type A" Dropshaft (design flow range of 460 to 600 cfs)

ADOT has constructed 5 of these structures as inlets along the east I-10 Inner Loop Tunnel, and is constructing 2 more as inlets to the north I-10 tunnel.

The dropshafts were designed by PRC Engineering with HNTB as project management consultant, and are roughly based upon the structures model tested by SAFHL in Minnisota.

NOTE: The helicoid dropshafts currently under construction on the west I-10 Inner Loop Tunnel are not currently acceptable for usage in the SR360 Interchange because of excessive head losses when surcharged. The helicoid very likely can be optimized through additional model testing by the Iowa Institute of Hydraulic Research (IIHR) but there is no time available for such testing. The proposed Type A Dropshaft that we are using should be cost effective when compared to the helicoid, because sufficient room exists within the site for the least expensive excavation methods to be used. Presumably the Type A Dropshaft can be constructed using the balloon forming methods used for the I-10 dropshafts.

AE101-0374-20M

HNTB HOWARD NEEDLES TAMMEN & BERGENDOFF	Made by PGJ	Date 6-3-87	Job No. 11057
	Checked by	Date	Sheet No. 2/2

For DROPSHAFT #6 — SURCHARGE CONDITIONS

INLET: 8' WIDE x 10' HIGH BOX; DOWNSTREAM OF 108" RCP
SLOPE = 0.00057'/'

Q	NORMAL DEPTH	CRITICAL DEPTH
100 cfs	3.48'	1.69'
200 cfs	5.91'	2.69'
300 cfs	8.18'	3.52'
400 cfs	SURCHARGED	4.27'
500 cfs	SURCHARGED	4.95'

(NORMAL DEPTH: $Q = AR^{2/3} S_o \frac{1.486}{n}$)

(CRITICAL DEPTH: $Q = \sqrt{(A^3 \times g)/b}$)

CAPACITY BELOW 90% DEPTH (9') = 337 cfs
∴ FLOWS ABOVE 340 cfs CAN BE CONSIDERED SURCHARGED IN INLET

FOR DESIGN STORM CONDITIONS, ENTIRE DROPSHAFT INCLUDING INLET WILL BE SURCHARGED FOR A SUBSTANTIAL PERIOD OF TIME, FROM TUNNEL "BACKWATER"

INLET WILL NOT BE SURCHARGED ONLY WHEN TUNNEL HGL IS BELOW ~1174 AT INTERCHANGE; MEANING TUNNEL DISCHARGE MUST BE LESS THAN 1600 cfs WITH NO RIVER TAILWATER, OR LESS THAN 1350 cfs WITH A 10-YEAR RIVER FLOOD TAILWATER ELEVATION; INLET DISCHARGE MUST BE LESS THAN 340 cfs.

DROPSHAFT: DEAERATION CHAMBER WILL SURCHARGE WHEN TUNNEL IS FULL. WHEN TUNNEL IS EMPTY DEAERATION IS NOT A CONCERN.
CRITICAL PERIOD IS DURING THE TUNNEL FILLING PROCESS DURING A STORM, WHEN TUNNEL HGL AT THE INTERCHANGE IS BETWEEN THE SOFFIT OF THE DROPSHAFT CONNECTING CONDUIT (EL 1132.38) AND SOME UNKNOWN HEIGHT ABOVE THE TUNNEL CROWN (WHERE THE TUNNEL TAILWATER SURCHARGES THE DROPSHAFT SUFFICIENTLY ENOUGH TO PREVENT SIGNIFICANT QUANTITIES OF AIR FROM BEING ENTRAINED IN THE PLUNGE PORTION OF THE DROPSHAFT). BETWEEN THESE TWO ELEVATIONS THE DROPSHAFT DEAERATION CHAMBER WILL DEAERATE FLOW, PREVENTING AIR FROM ENTERING THE TUNNEL, ALLOWING IT TO VENT TO THE GROUND SURFACE VIA THE AIRSHAFT.

VE101-0374-20M