Property of
Flood Control District of MC Library
Please Return to
2801 W. Durango
Phoenix, AZ 85009

OLD CROSS CUT CANAL RECONSTRUCTION

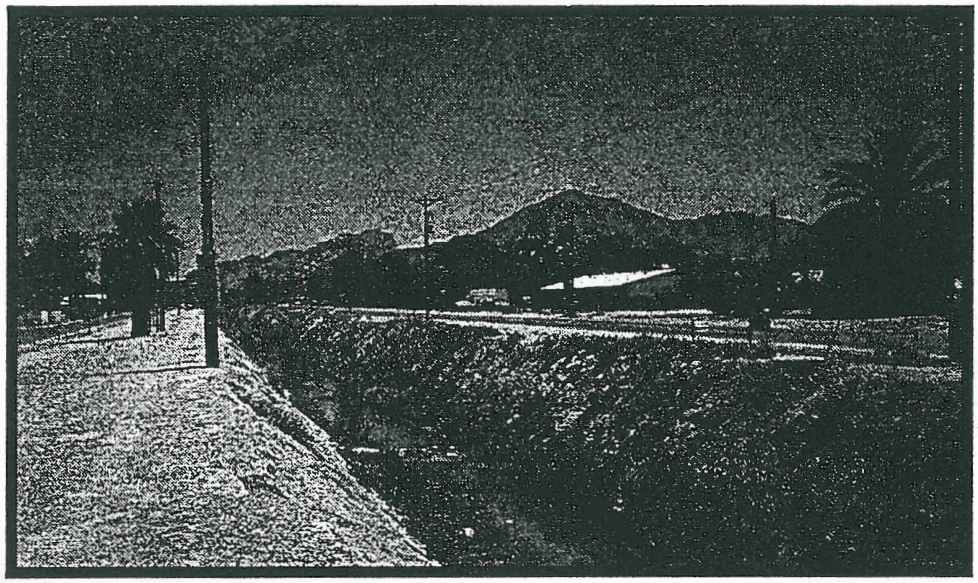

PHASE 1
GABION BASKET CORROSION ANALYSIS, CUT-OFF WALL SCOUR DEPTH CALCULATIONS & THRUST BLOCK CALCULATIONS

FCDMC PROJECT NO. 94-24
GREINER PROJECT NO. E002102
NOVEMBER 1994

GABION BASKET CORROSION ANALYSIS

Greiner

Job No. E002102 Project OCCC- Phase 1 Sheet 1 of 1

Subject Gabions - Corrosion from Groundwater

By V. Gibbons Date 11/22/94 Checked By KAS Date 11/22/94

The specifications call for the wire of the gabion baskets to be galvanized per AASHTO M55 with the min. weight of zinc coating @ 0.15 of an ounce per square foot of actual surface. In discussions with the manufacturer, we have concluded that this coating is effective in preventing corrosion in soils that are not high in salinity or either acidic or Basic (PH ranges far from 7.0). The geotechnical Report shows PH ranges from 8.0 to 8.5 (Slightly Basic environment) and soluble salts ranging from 0.085 % to 0.51 %. These readings do not indicate a corrosive environment, and considering the fact that these gabions will be in place for 3 to 5 years, we do not feel there is a concern. However if the Flood Control District has additional concerns or information indicating a corosive ground water condition, the Gabion baskets can be manufactured with a non-corosive PVC Coating. This coating will increase the materials cost of the wire baskets by 15 % ±.

CUT-OFF WALL
SCOUR DEPTH CALCULATIONS

Greiner

Job No. E002102 Project OCCC Sheet 1 of 3

Subject Scour Depth at Phase I Culvert Outlet

By ALB Date 11-15-94 Checked By KAS Date 11/18/94

To determine the adequacy of the cut-off wall depth at Phase I box culvert outlet, STA 59+50, FHWA HEC-14 Chapter V procedure was used to estimate the depth of unprotected scour hole at the culvert outlet. The flow rate Q = 2168 cfs was obtained from the Final Existing HEC-2 10-6-93 modified for Phase I 500 LF of 5'x18' equivalent double box culvert.

$Q = 2168$ cfs

$D = 5'$ = depth of equivalent box culvert

$b = 2(18') = 36'$ = width of box opening

$A = 180$ sq.ft.

$Y_e = \left(\frac{A}{2}\right)^{0.5}$ = equivalent depth for non circular culverts

$$Y_e = \left(\frac{180}{2}\right)^{0.5} = 9.4868$$

Discharge Intensity, D.I. $= \dfrac{Q}{\sqrt{g}\, Y_e^{5/2}}$

$$= \frac{2168}{\sqrt{32.2}\,(9.4868)^{5/2}} = 1.378$$

Coefficients of Scour (HEC-14, Table V-1, pg V-11)

	β	θ	α_e
Depth	0.57	0.10	1.53
Length	0.43	0.09	14.78

Sandy-clay, PI > 15

Greiner

Job No. E002102 Project OCCC Sheet 2 of 3

Subject Scour depth at Phase I Culvert outlet

By ALB Date 11-15-94 Checked By KAS Date 11/18/94

Scour hole dimensions

$t = 30$ min (estimated)

$t_o = 316$ min.

$$\text{Depth} = \frac{h_s}{Y_e} = \alpha_e (D.1.)^{\beta} \left(\frac{t}{t_o}\right)^{\theta}$$

$$= 1.53(1.378)^{0.57}\left(\frac{30}{316}\right)^{0.10}$$

$$= 1.45$$

$$h_s = 1.45(Y_e)$$

$$= (1.45)(9.4868)$$

$$= \underline{13.76'}$$

$$\text{Length} = \frac{L_s}{Y_e} = \alpha_e (D.1.)^{\beta} \left(\frac{t}{t_o}\right)^{\theta}$$

$$= 14.78(1.378)^{0.43}\left(\frac{30}{316}\right)^{0.09}$$

$$= 13.725$$

$$L_s = 13.725(Y_e)$$

$$= (13.725)(9.4868)$$

$$= \underline{130.2'}$$

Location of Maximum Scour

$$0.4 L_s = 0.4(130.2) = \underline{52.08'}$$

Greiner

Job No. E002102 Project OCCC Sheet 3 of 3

Subject Scour Depth at Phase I culvert Outlet

By ALB Date 11/22/94 Checked By KAS Date 11/23/94

The scour calculations indicate a maximum scour depth of 13.76' will occur at 0.4 L_s or 52.03'. However, considering the temporary nature of this culvert outlet, a cut-off wall to a depth of 14' appears excessive. The Phase I 90% plans submitted to the Flood Control District show a cut off wall to a depth of 3' at 50' downstream of the outlet. The final cut-off wall dimensions will require further discussion with the Flood Control District.

THRUST BLOCK CALCULATIONS

Greiner

Job No. E002102 Project OCCC - 45" WL Relocation Sheet 1 of 17

Subject Thrust block design

By ALB Date 11/11/94 Checked By KAS Date 11/15/94

Purpose: Calculate dimension of thrust block required to restrain new 45" WL.

Thrust Calculation:

$$T = 2PA \sin\frac{\theta}{2}$$

Ref: Cast Iron Pipe Research Association Handbook: Ductile Iron Pipe Cast Iron Pipe

Where T = Resultant thrust force (lbs)
P = Max. sustained pressure (psi)
A = Pipe cross sectional area (in^2)
θ = Bend deflection angle (degrees)

Operating pressure, P = 60 psi

New 45" PCCP Pipe ID = 45"
Pipe OD = 54"
Nominal joint diam, D = 48.5" (conservative to say pressure acts to steel cylinder)

For 45° bend

$$T = 2PA \sin\frac{\theta}{2} = 2(60)(48.5)^2\frac{\pi}{4}\left(\sin\frac{45}{2}\right)$$
$$= 84{,}839 \text{ lbs}$$

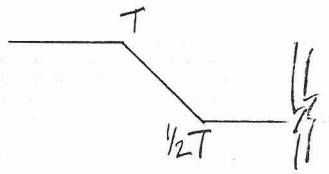

1.5T = 127,259 lbs

For 60° bend

$$T = 2PA \sin\frac{\theta}{2} = 2(60)(48.5)^2\frac{\pi}{4}\left(\sin\frac{60}{2}\right)$$
$$= 110{,}847 \text{ lbs}$$

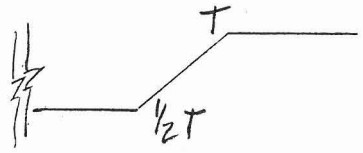

1.5T = 166,271 lbs

Greiner

Job No. E002102 Project DCCC - 45" WL Relocation Sheet 2 of 17

Subject Thrust block design

By ALB Date 11/11/94 Checked By KAS Date 11/15/94

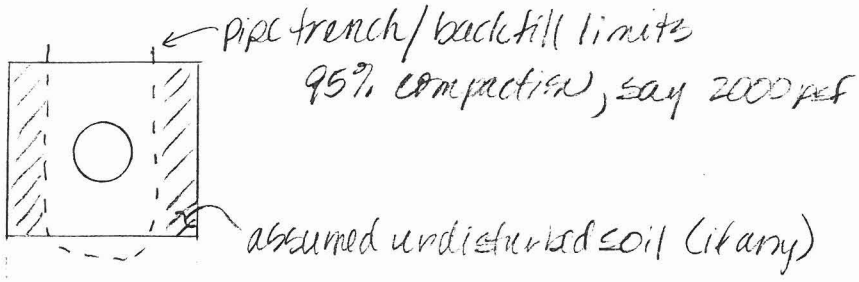

For soil bearing of 2000 psf

Required surface contact for 45° bend

$$\frac{1.5T}{2000\,psf} = \frac{127{,}259\ lbs}{2000\,psf} = 63.6\ SF$$

$$63.6\,SF + A_{pipe} = 63.6 + \left(\frac{54''}{12}\right)^2 \frac{\pi}{4}$$

$$= 79.5\,SF$$

Equivalent thrust block = 9'x9' (81 SF)

Actual Uniform Load:

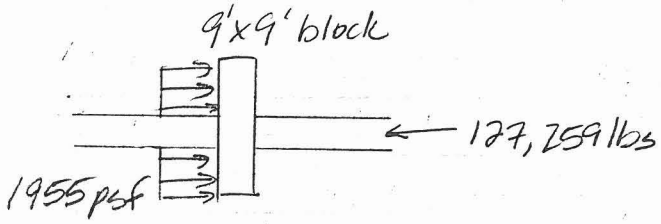

$$\frac{127{,}259\ lbs}{(81\,SF - A_{pipe})} = 1955\ psf$$

Greiner

Job No. E002102 Project OCCL - 45" WL Relocation Sheet 3 of 17

Subject Thrust block design

By ALB Date 11/11/94 Checked By KAS Date 11/15/94

Required surface contact for 60° bend

$$\frac{1.5T}{2000\,psf} = \frac{166{,}271\,lbs}{2000\,psf} = 83.1\,SF$$

$$83.1\,SF + A_{pipe} = 83.1 + \left(\frac{54''}{12}\right)^2 \frac{\pi}{4}$$
$$= 99.0\,SF$$

Equivalent thrust block = 10' x 10' (100 SF)

Actual Uniform Load:

$$\frac{166{,}271}{(100\,SF - A_{pipe})} = 1977\,psf$$

45° bend

1) Design block thickness for shear

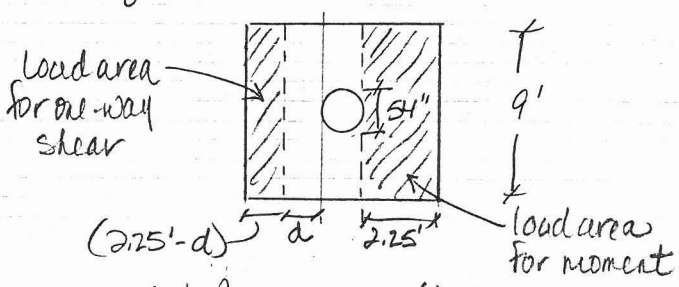

(a) One way action

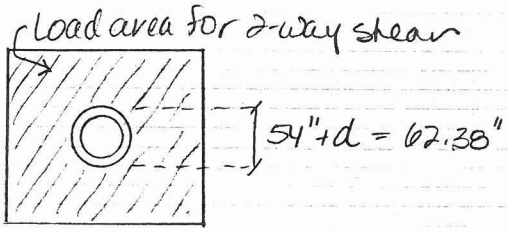

(b) Two way action

(Ref: Reinforced Concrete Design
Salmon, Charles G. &
Wang, Chu-kia.)

Assume thickness = 1'; # 5 bars

d = t - cover - bar diam.

d = 12" - 3" - 5/8"

= 8.375"

Greiner

Job No. E002102 Project OCCC - 45" WL Relocation Sheet 4 of 17

Subject Thrust Block design

By ACB Date 11/11/94 Checked By KAS Date 11/15/94

(a) one way action

$V_u = (P_{net})(\text{effective area})$

$P_{net} = (\text{live load factor})(1955\,psf)$

$= (1.7)(1955)$

$= 3323.5\ psf = 3.32\ ksf$

$V_u = 3.32(2.25 - d)(9')$

$= 3.32(1.552)(9)$

$= 46.4\ kips$

$V_n = V_c = 2\sqrt{f'_c}\, b_w d$ (for no shear reinforcement)

$f'_c = 3000\,psi$ concrete

$V_n = 2\sqrt{3000}\,(9' \times \frac{12''}{1'})(8.38'')\frac{1}{1000}$

$= 99.1\ kips$

$V_u = 46.4\,kips < \phi V_n = 0.85(99.1) = 84.2\ kips$ OK

(b) two way action

$V_u = (P_{net})(\text{effective area})$

$= (3.32)(81 - (\frac{62.38}{12})^2 \frac{\pi}{4})$

$= 198.5\ kips$

$V_n = V_c = 4\sqrt{f'_c}\, b_o d$ (for no shear reinforcement)

$= 4\sqrt{3000}\,(\pi\, 62.38)(8.38)\frac{1}{1000}$

$= 359.8\ kips$

$V_u = 198.5\ kips < \phi V_n = 0.85(359.8) = 305.83\,kips$ OK

So, thickness $t = 12''$ OK

Greiner

Job No. E002102 Project OCCL - 45" WL Relocation Sheet 5 of 17

Subject Thrust block design

By ACB Date 11/11/94 Checked By KAS Date 11/15/94

2) Design required steel for bending moment

$$M_u = \frac{P_{net}\, b l^2}{2}$$

$$= \frac{(3.32)(9)(2.25)^2}{2}$$

$$= 75.6 \text{ ft-kips}$$

$$\text{Required } R_u = \frac{M_u}{\phi b d^2} = \frac{75.6(12000)}{(0.9)(9)(12)(8.38)^2}$$

$$= 132.9 \text{ psi}$$

$$\text{Required } \rho = \frac{1}{m}\left(1 - \sqrt{1 - \frac{2mR_u}{f_y}}\right)$$

$$m = \frac{f_y}{0.85 f'_c} \qquad f_y = 60 \text{ ksi steel}$$

$$= \frac{60{,}000}{(0.85)(3000)} = 23.5$$

$$\rho = \frac{1}{23.5}\left(1 - \sqrt{1 - \frac{2(23.5)(132.9)}{60{,}000}}\right)$$

$$= 0.00228$$

Maximum reinforcement = $0.75\rho_b$

$$\rho_b = \frac{0.85 f'_c}{f_y}\beta_1\left(\frac{87000}{87000 + f_y}\right) \qquad \text{for } f'_c = 3000 \text{ psi},\ \beta_1 = 0.85$$

$$= \frac{(0.85)(3000)}{60{,}000}(0.85)\left(\frac{87{,}000}{87{,}000 + 60{,}000}\right)$$

$$= 0.0214$$

$$0.75\rho_b = 0.75(0.0214) = 0.01605$$

$$\rho = 0.00228 < 0.75\rho_b = 0.01605 \qquad \underline{\text{OK}}$$

Greiner

Job No. E002102 Project OCCC - 45" WL Relocation Sheet 6 of 17

Subject Thrust block design

By ALB Date 11/11/94 Checked By KAS Date 11/15/94

* Minimum $\rho = \frac{200}{f_y}$ per ACI - 10.5 does not apply to slabs of uniform thickness, otherwise it would control here.

Required $A_s = \rho b d = 0.00228(9)(12)(8.38)$
$= 2.06$ sq. in.

Using 7 - #5 would satisfy this requirement

Provided $A_s = 2.17$ sq. in. (Table 3.7.1, Reinf. Conc. Design)

$C = 0.85 f'_c b a = 0.85(3\text{ ksi})(9)(12)a = 275.4a$

$T = A_s f_y = 2.17(60\text{ ksi}) = 130.2$ kips

$C = T \quad a = 0.47$ in.

$\phi M_n = \phi(C \text{ or } T)\left[d - \frac{a}{2}\right] = 0.9(132)\left[8.38 - \frac{0.47}{2}\right]\frac{1}{12} = 77.2$ ft-kips

$M_u = 75.6$ ft-kips $< \phi M_n = 77.2$ ft-kips OK

Development Length, L_d

Reinforcement must be embedded from face of pipe to a distance equal to the development length L_d

$L_d(\#5) = 15$ in (Table 6.9.1, Reinf. Conc. Design)

Allowing an inch cover on the end of #5 bars

actual embedment $= (2.25)(12) - 2'' = 25$ in $> L_d$ OK

Greiner

Job No. E002102 Project OCCC - 45" WL Relocation Sheet 7 of 17

Subject Thrust block Design

By ALB Date 11/11/94 Checked By KLS Date 11/15/94

Design Sketch 7 - #5

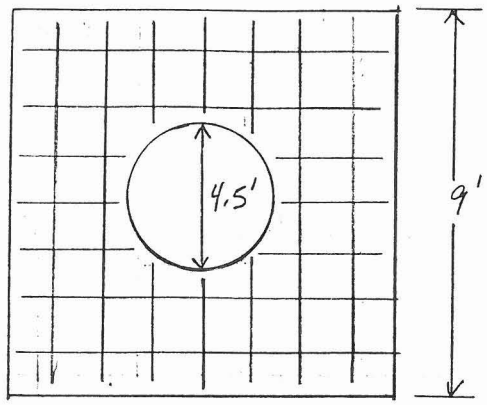

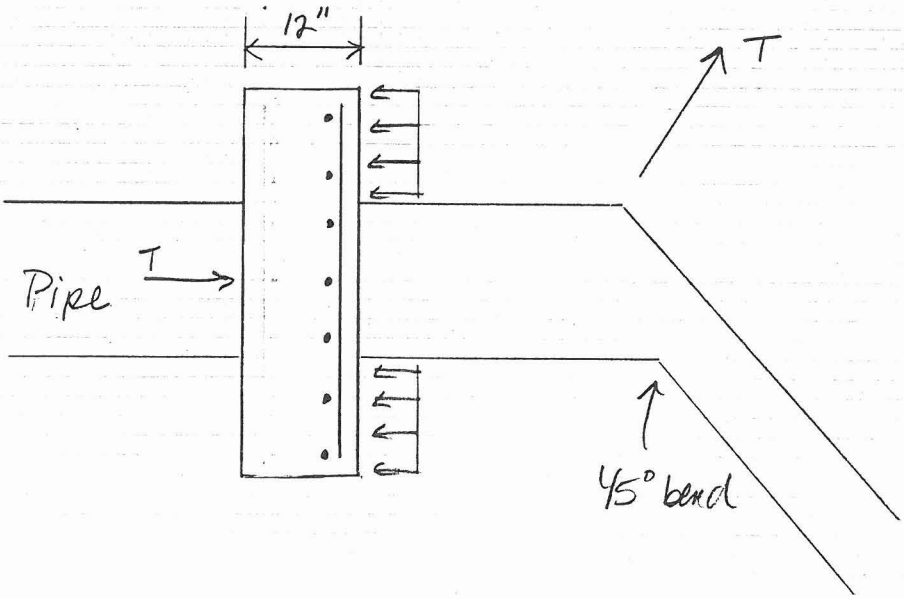

* Although this thrust block has been designed for the 45° bend, the larger 60° bend will be used at both elbows. See pg. 10 for explanation.

Greiner

Job No. E007102 Project OCCC - 45" WL Relocation Sheet 8 of 17

Subject Thrust block design

By ALB Date 11/11/94 Checked By KAS Date 11/15/94

60° bend

1) Design block thickness for shear

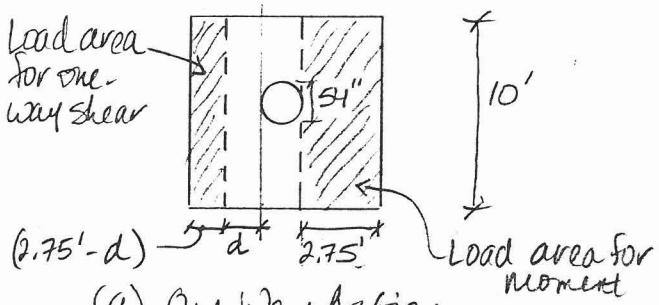

(a) One Way Action

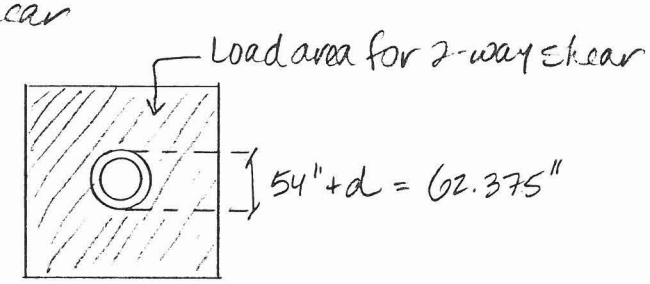

(b) Two Way Action

Assume thickness = 1' ; #5 bars

$d = t - 3''(\text{cover}) - 5/8''(\text{bar diam.})$

$= 12'' - 3'' - 5/8''$

$= 8.375''$

(a) One way action

$V_u = (p_{net})(\text{effective area})$

$p_{net} = (\text{Live load factor})(1977 \text{ psf})$

$= 1.7(1977)$

$= 3360.9 \text{ psf} = 3.36 \text{ ksf}$

$V_u = (3.36)(2.75 - d)(10')$

$= 3.36(2.0521)(10)$

$= 68.95 \text{ kips}$

$V_n = V_c = 2\sqrt{f'c}\, b_w d$

$V_n = 2\sqrt{3000}(10)(12)(8.375'')\frac{1}{1000}$

$= 110.09 \text{ kips}$

$V_u = 68.95 \text{ kips} < \phi V_n = 0.85(110.09) = 93.6 \text{ kips}$ OK

(b) two way action

$V_u = (p_{net})(\text{effective area})$

$= (3.36)\left(100 - \left(\frac{62.38}{12}\right)^2 \frac{\pi}{4}\right)$

$= 264.7$ kips

$V_n = V_c = 4\sqrt{f'_c}\, b_o d$

$= 4\sqrt{3000}\,(\pi\, 62.38)(8.38)\frac{1}{1000}$

$= 359.8$ kips

$V_u = 264.7 \text{ kips} < \phi V_n = 0.85(359.8) = 305.8$ kips OK

So, thickness $t = 12''$ OK

2) Design required steel for bending moment

$M_u = \frac{p_{net}\, b l^2}{2} = \frac{(3.36)(10)(2.75)^2}{2} = 127.05$ ft-kips

Required $R_u = \frac{M_u}{\phi b d^2} = \frac{127.05(12000)}{(0.9)(10)(12)(8.38)^2}$

$= 201.0$ ft-kips

Required $\rho = \frac{1}{m}\left(1 - \sqrt{1 - \frac{2mR_u}{f_y}}\right)$

$m = \frac{f_y}{0.85 f'_c} = \frac{60}{(0.85)3} = 23.5$

$\rho = \frac{1}{23.5}\left(1 - \sqrt{1 - \frac{2(23.5)(201.0)}{60{,}000}}\right)$

$= 0.00349$

Max. Reinforcement $= 0.75\rho_b = 0.0160$ (Table 3.5.1 Reinf. Conc. Design)

$\rho = 0.00349 < 0.75\rho_b = 0.0160$ OK

Greiner

Job No. E002102 Project OCCC - 45" WL Relocation Sheet 10 of 17

Subject Thrust block design

By AWB Date 11/11/94 Checked By KAS Date 11/15/94

Required $A_s = \rho bd = 0.00349(10)(12)(8.38)$
$= 3.51$ sq. in

Using 13 - #5 would satisfy this requirement

Provided $A_s = 3.99$ sq in.

$C = 0.85 f'_c ba = 0.85(3ksi)(10)(12)a = 306a$

$T = A_s f_y = 3.99(60ksi) = 239.4$ kips

$C = T \quad a = 0.78$ in

$\phi M_n = \phi(C \text{ or } T)\left[d - \frac{a}{2}\right] = 0.9(239.4)\left(8.38 - \frac{0.78}{2}\right)\frac{1}{12}$
$= 143.5$ ft-kips

$M_u = 127.05$ ft-kips $< \phi M_n = 143.5$ ft-kips OK

Development Length, L_d

$L_d(\#5) = 15$ in. (Table 6.9.1, Reinf. Conc. Design)

Allowing an inch cover on end of #8 bars

actual embedment $= (2.75)(12) - 2" = 25$ in $> L_d$ OK

* The 10x10x1 thrust block designed for the 60° bend will also be used at the 45° bend. This will increase the factor of safety of design at the 45° bend, will increase constructability (constructing two identical thrust blocks), and will eliminate any field error which could result in switching the thrust blocks and creating underdesign at the 60° bend.

Greiner

Job No. E002102 Project OCC - 45" WL Relocation Sheet 11 of 17

Subject Thrust block design

By AUB Date 11/11/94 Checked By KAS Date 11/15/94

Design Sketch 13 - #5

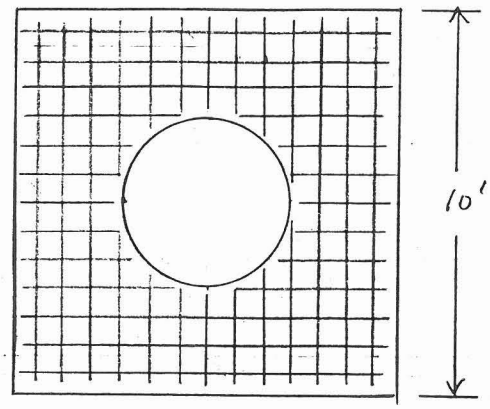

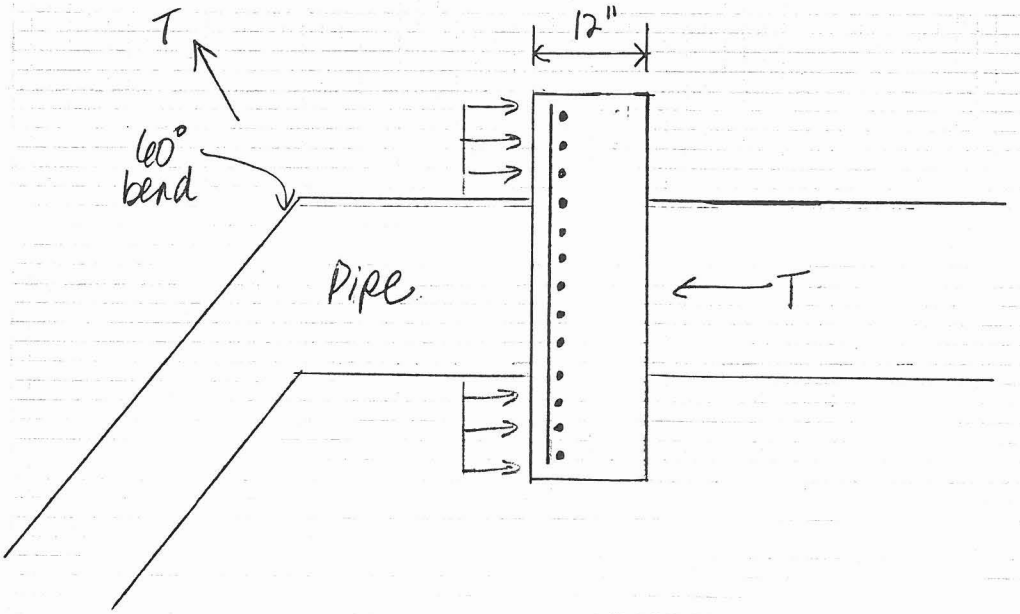

* See attached CAD drawing for more detailed information.

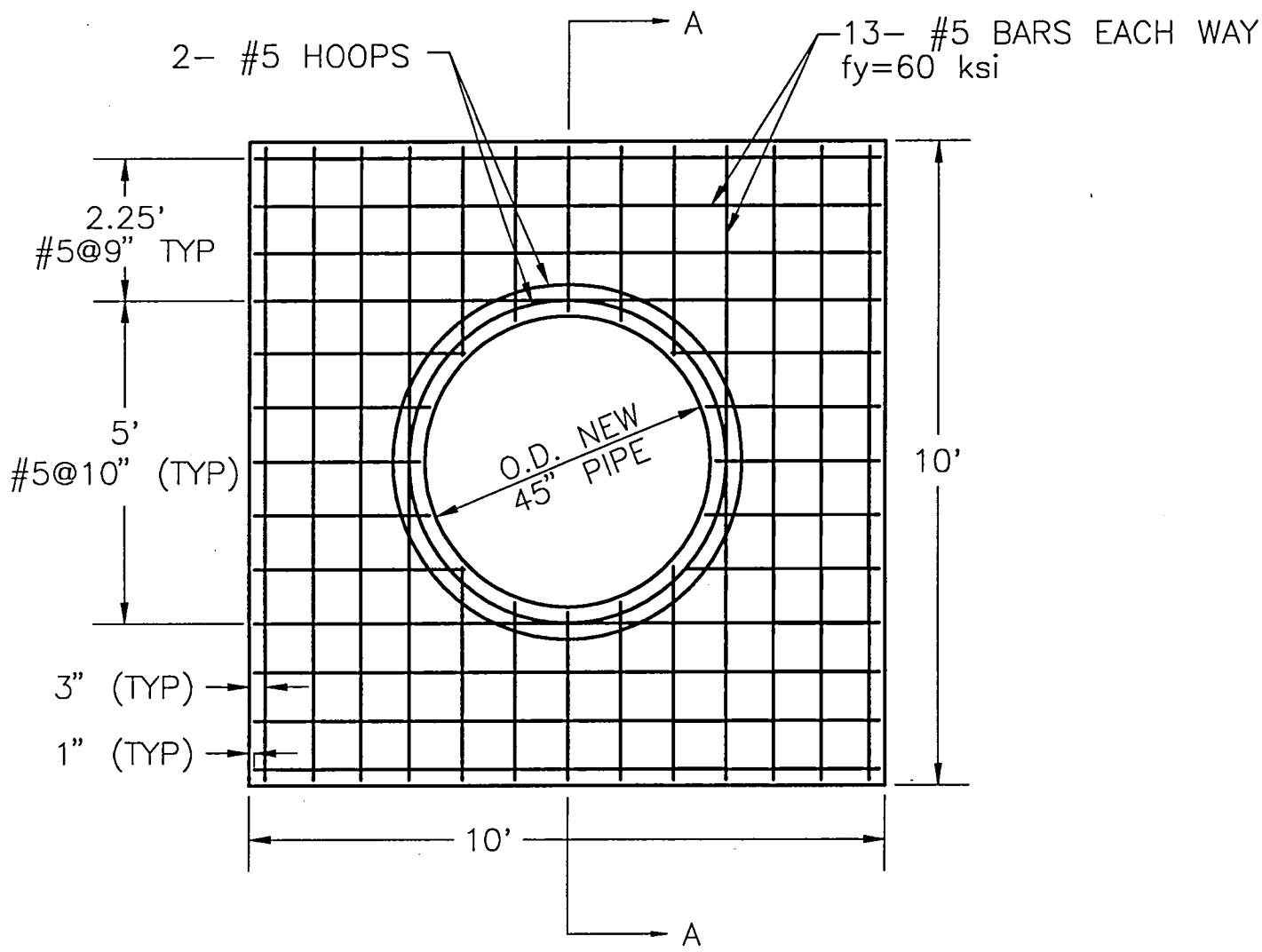

45" PIPE THRUST BLOCK

F
C9.4

N.T.S.

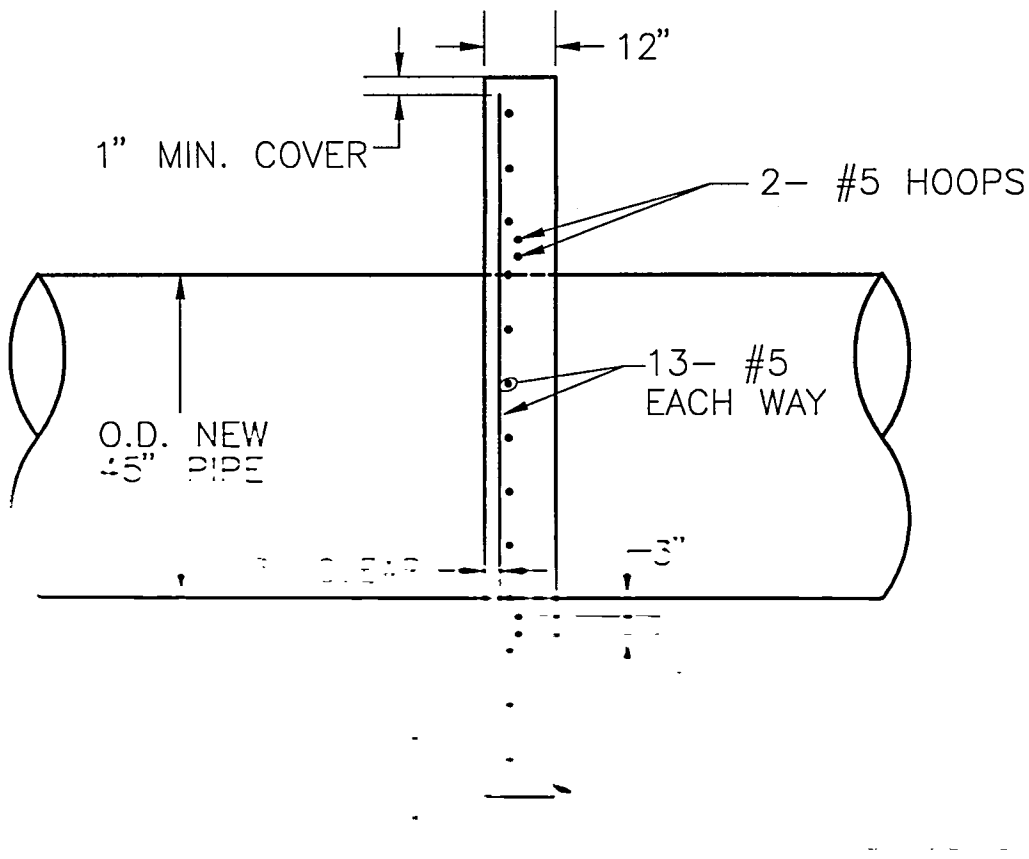

SECTION A-A

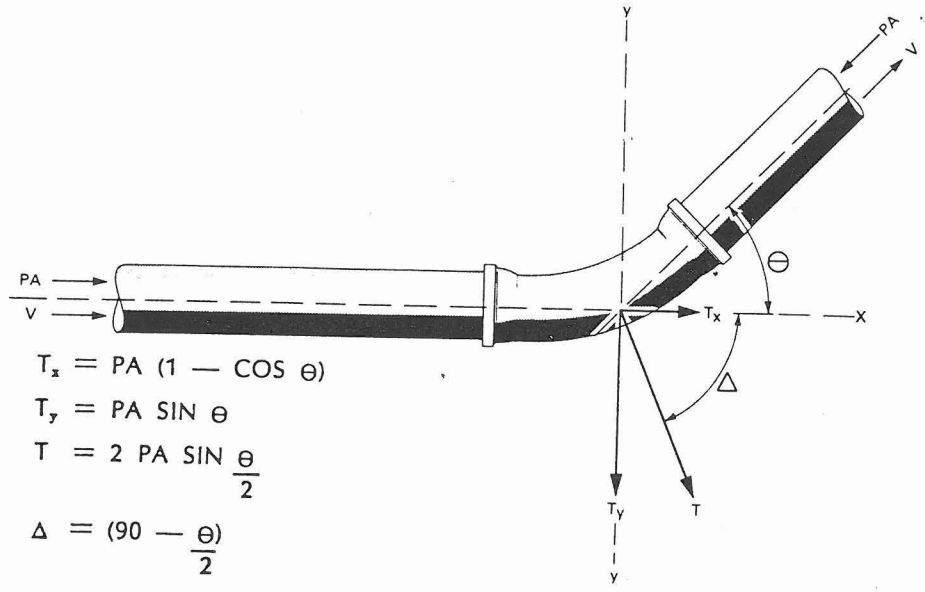

$$T_x = PA\ (1 - \cos\theta)$$

$$T_y = PA \sin\theta$$

$$T = 2\ PA \sin\frac{\theta}{2}$$

$$\Delta = \frac{(90 - \theta)}{2}$$

Figure 2—THRUST FORCES ACTING ON A BEND

gorized into two groups: gravity and bearing blocks.

Gravity Blocks (Figure 1): Important factors considered in design are:

- —Horizontal and vertical thrust components
- —Allowable bearing value of soil
- —Combined weight of pipe, water and soil prism
- —Density of block material
- —Block dimensions and volume
- —A thrust force analysis is conducted similar to Figure 2.

Physical characteristics of the block are determined from the following formulas:

(1) $$V_G = \frac{PA \sin\theta}{W_m}$$

(neglecting W_y)

$$V_G = \frac{T_y - W_y}{W_m}$$

(including W_y)

where $W_y = 1/2\ W_c L_x$

Earth cover (W_e) is neglected, when determining (W_c), if unstable conditions are anticipated. The horizontal thrust component (T_x) is counteracted by soil pressure on the vertical face of the block (F_p) or by joint restraint.

Allowable soil bearing pressure determines the minimum size of the block base.

Bearing Blocks (Figure 3):

Significant design criteria for bearing blocks include the following factors:

- —Passive soil pressure
- —Placement of bearing surface against undisturbed soil
- —Block height (h) should be equal to or less than one half the total depth to the block base (H_T) except (h) should not be less than (D). Thus $h \leqq 1/2\ H_T$ or $h \geqq D$, whichever is greater.
- —Block width (b) usually varies

Table 3.5.1
Maximum Reinforcement Ratio ρ for Singly Reinforced Beams (Corresponding to $0.75\rho_b$)

f_y	$f'_c = 3000$ psi $\beta_1 = 0.85$	$f'_c = 3500$ psi $\beta_1 = 0.85$	$f'_c = 4000$ psi $\beta_1 = 0.85$	$f'_c = 5000$ psi $\beta_1 = 0.80$	$f'_c = 6000$ psi $\beta_1 = 0.75$
40,000 psi	0.0278	0.0325	0.0371	0.0437	0.0491
50,000 psi	0.0206	0.0241	0.0275	0.0324	0.0364
60,000 psi	0.0160	0.0187	0.0214	0.0252	0.0283
f_y	$f'_c = 21$ N/mm² $\beta_1 = 0.85$	$f'_c = 24$ N/mm² $\beta_1 = 0.85$	$f'_c = 28$ N/mm² $\beta_1 = 0.85$	$f'_c = 35$ N/mm² $\beta_1 = 0.80$	$f'_c = 42$ N/mm² $\beta_1 = 0.75$
280 N/mm²	0.0277	0.0317	0.0369	0.0435	0.0489
350 N/mm²	0.0205	0.0235	0.0274	0.0322	0.0362
420 N/mm²	0.0159	0.0182	0.0213	0.0250	0.0281
f_y	$f'_c = 200$ kgf/cm² $\beta_1 = 0.85$	$f'_c = 240$ kgf/cm² $\beta_1 = 0.85$	$f'_c = 280$ kgf/cm² $\beta_1 = 0.85$	$f'_c = 320$ kgf/cm² $\beta_1 = 0.82$	$f'_c = 360$ kgf/cm² $\beta_1 = 0.79$
2800 kgf/cm²	0.0266	0.0319	0.0372	0.0410	0.0444
3500 kgf/cm²	0.0197	0.0236	0.0276	0.0304	0.0330
4200 kgf/cm²	0.0153	0.0184	0.0214	0.0236	0.0256

EXAMPLE 3.5.1. Determine whether or not the amount of steel used in the beam ($b = 14$; $d = 21.5$; $A_s = 5.08$; $f'_c = 5000$; $f_y = 50{,}000$) of Example 3.4.1 (Fig. 3.4.1) is acceptable according to the ACI Code.

Solution: (a) Determine the balanced amount of steel using basic principles, according to the ACI Code. From Fig. 3.5.2,

$$x_b = \frac{0.003(21.5)}{0.003 + 50/29{,}000} = 13.65 \text{ in.}$$

$$\beta_1 = 0.80 \text{ for } f'_c = 5000 \text{ psi}$$

$$a_b = 0.80(13.65) = 10.92 \text{ in.}$$

$$C_b = 0.85(5)(14)(10.92) = 650 \text{ kips}$$

$$A_{sb} = \frac{650}{50} = 13.0 \text{ sq in.}$$

(b) Compare actual steel used with the maximum permitted by the ACI Code.

$$\max A_s = 0.75A_{sb} = 0.75(13.0) = 9.75 \text{ sq in.}$$

$$\text{actual } A_s = 5.08 \text{ sq in.} < 9.75 \text{ sq in.} \qquad \text{OK}$$

3.7 Practical Selection for Beam Sizes, Bar Sizes, and Bar Placement

In the previous section the procedure and example for the design of rectangular sections in bending with tension reinforcement only have been treated on the assumption that the design moment $M_n = M_u/\phi$ is already known. This is rarely the case, however, because the design moment must include the effect of the weight of the beam itself which has not yet been designed. In reality, then, the dead weight of the beam has to be assumed at the outset; a trial beam size is then obtained and may be readjusted if its effect on the design moment is significantly different from the assumed value.

The choice of the steel percentage ρ is very much dependent on the limitation of the deflection of the beam. Years of experience with the working stress method showed that deflection problems were rarely encountered with beams having a steel reinforcement ratio ρ not more than one-half the maximum permissible value. The use of this amount (one-half of $0.75\rho_b = 0.375\rho_b$) may provide a suitable *guide* for the preliminary choice of the reinforcement ratio.

For the selection of an integral number of bars to meet a total steel area requirement, it is desirable to tabulate the combined area of several bars at a time. Table 3.7.1 gives bar areas for up to 10 bars of the different sizes.

Table 3.7.1
Total Areas for Various Numbers of Reinforcing Bars

Bar Size	Nominal Diameter (in.)	Weight (lb/ft)	Number of Bars 1	2	3	4	5	6	7	8	9	10
#3	0.375	0.376	0.11	0.22	0.33	0.44	0.55	0.66	0.77	0.88	0.99	1.10
#4	0.500	0.668	0.20	0.40	0.60	0.80	1.00	1.20	1.40	1.60	1.80	2.00
#5	0.625	1.043	0.31	0.62	0.93	1.24	1.55	1.86	2.17	2.48	2.79	3.10
#6	0.750	1.502	0.44	0.88	1.32	1.76	2.20	2.64	3.08	3.52	3.96	4.40
#7	0.875	2.044	0.60	1.20	1.80	2.40	3.00	3.60	4.20	4.80	5.40	6.00
#8	1.000	2.670	0.79	1.58	2.37	3.16	3.95	4.74	5.53	6.32	7.11	7.90
#9	1.128	3.400	1.00	2.00	3.00	4.00	5.00	6.00	7.00	8.00	9.00	10.00
#10	1.270	4.303	1.27	2.54	3.81	5.08	6.35	7.62	8.89	10.16	11.43	12.70
#11	1.410	5.313	1.56	3.12	4.68	6.24	7.80	9.36	10.92	12.48	14.04	15.60
#14[a]	1.693	7.65	2.25	4.50	6.75	9.00	11.25	13.50	15.75	18.00	20.25	22.50
#18[a]	2.257	13.60	4.00	8.00	12.00	16.00	20.00	24.00	28.00	32.00	36.00	40.00

[a] #14 and #18 bars are used primarily as column reinforcement and are rarely used in beams.

For the placement of bars within the beam width, ACI-7.6.1 specifies the clearance needed between bars to permit proper concrete placement around them. This clearance is 1 in. or the nominal diameter of the bar, whichever is greater. When two or more layers of bars are required, the minimum clearance between layers is 1 in. (ACI-7.6.2). Table 3.7.2 gives minimum beam widths for various numbers of equal-sized bars, computed in the manner described above.

Table 6.9.1
Basic Development Length L_d for Tension Reinforcement

ASTM Bars with L_d in Inches

Bar Size	$f_y = 40{,}000$ psi, f'_c (psi) 3000	4000	5000	$f_y = 60{,}000$ psi, f'_c (psi) 3000	4000	5000
#3	12[a]	12[a]	12[a]	9[b]	9[b]	9[b]
#4	12[a]	12[a]	12[a]	12	12	12
#5	10[b]	10[b]	10[b]	15	15	15
#6	12.8	12	12	19.2	18	18
#7	17.5	15.2	14	26.2	22.8	21
#8	23.1	20.0	17.9	34.6	30.0	26.8
#9	29.2	25.3	22.6	43.8	38.0	33.9
#10	37.1	32.2	28.8	55.6	48.2	43.1
#11	45.5	39.5	35.4	68.4	59.2	53.0
#14	62.1	53.8	48.1	93.1	80.6	72.1
#18	80.3	69.6	62.2	121	104	93.3

Metric Bars with L_d in Centimeters

Bar Diameter (mm)	$f_y = 280$ N/mm², f'_c (N/mm²) 21	28	35	$f_y = 420$ N/mm², f'_c (N/mm²) 21	28	35
10	30[a]	30[a]	30[a]	24.4[b]	24.4[b]	24.4[b]
12	30[a]	30[a]	30[a]	29.2[b]	29.2[b]	29.2[b]
16	26.0[b]	26.0[b]	26.0[b]	39.0	39.0	39.0
20	36.5	32.5	32.5	54.7	48.7	48.7
22	44.1	38.2	35.7	66.2	57.3	53.6
25	57.0	49.4	44.2	85.5	74.0	66.2
28	71.5	61.9	55.4	107	92.9	83.1
32	93.3	80.8	72.3	140	121	108
40[c]	140	121	109	210	182	163
50[c]	180	155	139	269	233	209
60[c]	216	187	167	324	280	251

[a] Development length is governed by 12 in. (30 cm) minimum even with top bar modification (see Sec. 6.10).
[b] If no modification factors greater than 1.0 are to be used, value is 12 in. (30 cm) minimum.
[c] On basis of bar area, coefficients in Eqs. (6.9.2) and (6.9.3) are changed to 0.075 for 40-mm bar, 0.096 for 50-mm bar, and 0.1154 for 60-mm bar.

For *deformed* wire, using 5/6 of a basic bond stress capacity of $10\sqrt{f'_c}$ (see Ref. 16),

$$L_d = \frac{f_y d_b}{4u_u} = \frac{f_y d_b}{4[(5/6)10\sqrt{f'_c}]} = 0.03\frac{d_b f_y}{\sqrt{f'_c}}$$

Greiner

Job No. E002102 Project OCCC Sheet 17 of 17

Subject Thrust block design

By ALB Date 11/23/94 Checked By KAS Date 11/23/94

Backfill to the approximate box culvert excavation limits will not be sufficent to achieve the necessary bearing strength of soil used in the thrust block design. Space restraints (i.e. 4" gas to the west and vault to the east) prevent moving the thrust block and connection further from the box culvert excavation walls. Our recommendation is to provide a shoring system near the excavation limits. We propose to include in the specifications that the contractor shall submit stamped shop drawings of a shoring system designed for the equivalent fluid pressure of the soil plus the surcharge load produced by the thrust force.

GABION CALCULATIONS

Greiner

Job No. E002102 Project OCCC Sheet 1 of 2

Subject Gabion Wing Wall Calcs

By ALB Date 11-1-94 Checked By KAS Date 11/3/94

1991 GEOTECH REPORT BY THOMAS-HARTIG & ASSOCIATES, INC. SPECIFIES THE FOLLOWING EQUIVALENT FLUID PRESSURES FOR VERTICAL WALLS AND HORIZONTAL BACKFILL SURFACES:

LATERAL BACKFILL PRESSURES:

Above GW Table = 60 psf/ft

Below GW Table = 95 psf/ft

THE RESULTING HORIZONTAL ACTIVE FORCES FOR 15' WALL ARE:

Above GW Table:

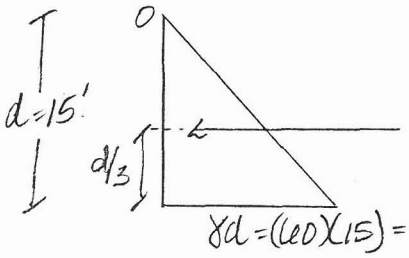

$$\frac{\gamma d^2}{2} = \frac{(60)(15)^2}{2} = 6750 \text{ lb/ft}$$

Below GW Table:

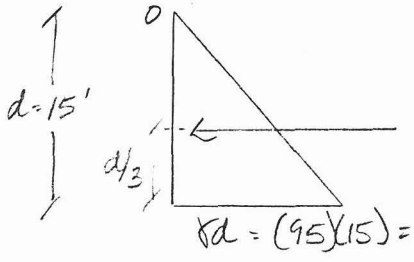

$$\frac{\gamma d^2}{2} = \frac{(95)(15)^2}{2} = 10{,}688 \text{ lb/ft}$$

FOR MACCAFERRI GABION PROGRAM, THE FOLLOWING SOIL PARAMETERS OBTAINED FROM THE THOMAS-HARTIG & ASSOC. GEOTECH REPORT WERE INPUT:

SOIL FRICTION ANGLE $\phi = 35°$

UNIT WEIGHT = 126 pcf; use 130 pcf

Greiner

Job No. E002102 Project DCCC Sheet 2 of 2

Subject Gabion Wing Wall Calcs

By ALB Date 11-1-94 Checked By KAS Date 11/3/94

USING 5 GABION COURSES (FOR 15' WALL), 6" WALL BATTER (1:10 SLOPE), AND FILTER FABRIC PLACED AT THE BACK OF THE GABION WALL, THE FOLLOWING RESULTS ARE GENERATED FROM THE MACCAFERRI PROGRAM (SEE ATTACHED OUTPUT)

Horizontal Component of Pa = 4337.3 lb/ft

THIS VALUE IS LOWER THAN THE FORCES CALCULATED FROM EQ FLUID PRESSURES

Above GW Table = 6750 lb/ft

Below GW Table = 10,688 lb/ft

HOWEVER, WHEN CHECKING AGAINST SLIDING,

For Program calculate force:

Sliding force = 4337.3 lb/ft

Antisliding force = 13111.0 lb/ft

Factor of Safety = 3.02 > 1.5 ✓

For Above GW Table

Sliding force = 6750 lb/ft

Antisliding force = 13111 lb/ft

Factor of Safety = 1.94 > 1.5 ✓

For Below GW Table

Sliding force = 10,688 lb/ft

Antisliding force = 13111 lb/ft

Factor of Safety = 1.23 < 1.5, however, the condition of GW raising above the wall is unlikely.

Greiner

Job No. E 002102 Project OCCC Sheet 2A of 3

Subject GABION WINGWALL CALCS - SUPPLEMENTAL

By KAS Date 11/28/94 Checked By ALB Date 11/28/94

CHECK OVERTURNING MOMENT:

1) PROGRAM FORCE OVERTURNING MOMENT = 4337.3 ACTING AT 4.24' ABOVE POINT '0'

→ OT MOMENT = 18,394 lbft/ft

PROGRAM RESTORING MOMENT = WALL WEIGHT MOMENT = 29,839 lb
+ ENCASED SOIL MOMENT = 45,167 lb
+ ACTIVE VERTICAL FORCE MOM = 10,402 lb
+ PASSIVE HORIZONTAL MOMENT = 1,719.9 lb

→ RESTORING MOMENT = 87,128 lb

$$FS(OT) = \frac{87,128}{18,394} = 4.74 > 2.0 \quad OK$$

2) WORST CASE - BELOW GW TABLE (UNDRAINED CONDITION):

→ CONSERVATIVELY ASSUME RESTORING MOMENT IS UNCHANGED FROM PROGRAM VALUES, WITH THE EXCEPTION OF ACTIVE VERTICAL FORCE MOMENT INCREASE DUE TO INCREASED ACTIVE FORCE.

→ OT MOMENT MULTIPLIER = $\frac{10,688}{4337.3}$ = 2.46

→ ACTIVE VERTICAL FORCE MOMENT MULTIPLIER = 2.46

→ OT MOMENT = 18,394 ft lb/ft (2.46) = 45,327 ft lb/ft

→ RESTORING MOMENT = (87,128 − 10,402) + (2.46)(10,402) = 102,359 ft lb/ft

$$\Rightarrow FS(OT) = \frac{102\,359}{45,327} = 2.26 > 2.0 \quad OK$$

Wall data

- Number of gabion courses		5
- Wall batter	deg	6

Soil parameters

- Soil friction angle	deg	35
- Unit weight	lb/ft3	130
- Cohesion	lb/ft2	0
- Limit pressure	lb/ft2	

Backfill material

1) downhill	Y/N	Y
2) underneath	Y/N	Y
- Backfill friction angle	deg	30
- Backfill unit weight	lb/ft3	150
- Slope of cut	deg	90

GROUND PROFILE

Backfill slope		Section 1	Section 2
- Slope	deg	0	deg
- Surcharge load	lb/ft2	0	lb/ft2

- Horizontal distance between the inner top of the wall and the change in slope and/or surcharge ..... ft

Downhill slope

- Slope angle	deg	0
- Downhill foundation depth	ft	2

GABION PARAMETERS

- Gabion fill unit weight	lb/ft3	140
- Empty gabion unit weight	lb/ft3	.06
- Tensile strength of mesh	lb/ft	1700

} VERY CONSERVATIVE VALUES

USE OF FILTER CLOTH

- Placement : at the back	Y/N	Y
on foundation	Y/N	N
at interface cut-backfill	Y/N	N
Reduction in soil friction angle (percentage)	%	50

SEISMIC ACTIONS

- Is the structure in seismic areas?	Y/N	N
Coefficient of seismic intensity (0.04-0.07-0.1)		0

1)	Y :	3	Xa:	0	Xb:	9
2)	Y :	6	Xa:	0	Xb:	6
3)	Y :	9	Xa:	0	Xb:	6
4)	Y :	12	Xa:	0	Xb:	3
5)	Y :	15	Xa:	0	Xb:	3

Check against sliding

- sliding forces ..... Fs = lb/ft 4337.3
- antisliding forces ..... Fa = lb/ft 13111.
- safety factor against sliding ..... μsl= 3.02

Check against overturning

- overturning moment ..... Mo = lbft/ft 18394.
- restoring moment ..... Mr = lbft/ft 87129.
- safety factor against overturning ..... μov= 4.74

Check against bearing failure

- normal force on foundation ..... N = lb/ft 15984.
- shear force on foundation ..... T = lb/ft 2620.0
- eccentricity ..... e = ft .30
- normal stress on outer foundation border ..... σ1 = lb/ft2 2137.0
- normal stress on inner foundation border ..... σ2 = lb/ft2 1415.1
- soil allowable stress ..... σa = lb/ft2 5239.2

Check against overall stability

- safety factor against overall stability ..... μos= 29.05

Normal/shear stresses inside the wall

- at each level the values for normal/shear stresses are lower than the allowable ones

Acting forces due to the wall and the soil

- batter of the acting thrust plane ..... β = deg 90.00

- wall weight ..... Ww = lb/ft 7938.0
- wall weight moment referred to point O ..... Mw = lbft/ft 29839.

- 'encased' soil weight ..... Ws = lb/ft 6478.9
- 'encased' soil moment referred to point O ..... Ms = lbft/ft 45167.

- surcharge weight on 'encased ' soil ..... Wc = lb/ft 0.00
- moment of the surcharge weight on 'encased' soil ref. to point O ..... Mc = lbft/ft 0.00

- weight of soil between foundation and the shear plane ..... Wf = lb/ft 631.53

Active thrust : forces and parameters

- active thrust coefficient ..... Ka = .248
- active thrust height ..... Ha = ft 15.54
- active thrust value ..... Pa = lb/ft 4490.3
- horizontal component of Pa ..... Pah= lb/ft 4337.3
- moment of Pah referred to point O ..... Mah= lbft/ft 18394.
- vertical component of Pa ..... Pav= lb/ft 1162.1
- moment of Pav referred to point O ..... Mav= lbft/ft 10402.

Passive thrust : forces and parameters

- passive thrust coefficient ..... Kp = 10.095

Passive thrust acting down to point O

- passive thrust height ..... Hp' = ft 1.99
- passive thrust value ..... Pp' = lb/ft 2995.4
- horizontal component of Pp ..... Pph' = lb/ft 2594.1
- vertical component of Pp ..... Ppv' = lb/ft 1497.7
- moment of Pph' referred to point O ..... Mp' = lbft/ft 1719.9

Passive thrust acting at the sliding plane level

- passive thrust height ..... Hp'' = ft 2.93
- passive thrust value ..... Pp'' = lb/ft 6499.0
- horizontal component of Pp'' ..... Pph''= lb/ft 5628.3
- vertical component of Pp'' ..... Ppv''= lb/ft 3249.5

Sect	H	N	T	M	σmax	τav	τal
	ft	lb/ft	lb/ft	lbft/ft	lb/ft2	lb/ft2	lb/ft2
1	3.00	8628.42	1432.39	577.96	1470.91	238.73	705.15
2	6.00	6163.14	901.24	599.56	1061.61	150.21	459.57
3	9.00	1899.04	355.66	309.87	710.28	118.55	223.98
4	12.00	913.34	42.82	-57.54	317.80	14.27	27.60

THOMAS ROAD BOX CULVERT CONVEYANCE CAPACITY ANALYSIS AND BUOYANCY CALCULATIONS

Greiner

Job No. E002102 Project OCCC - Phase 1 Sheet 1 of 2

Subject Bouyancy Calcs for CBC & Temp Slab inside @ Thomas Rd.

By V. Gibbons Date 11/22/94 Checked By KAS Date 11/22/94

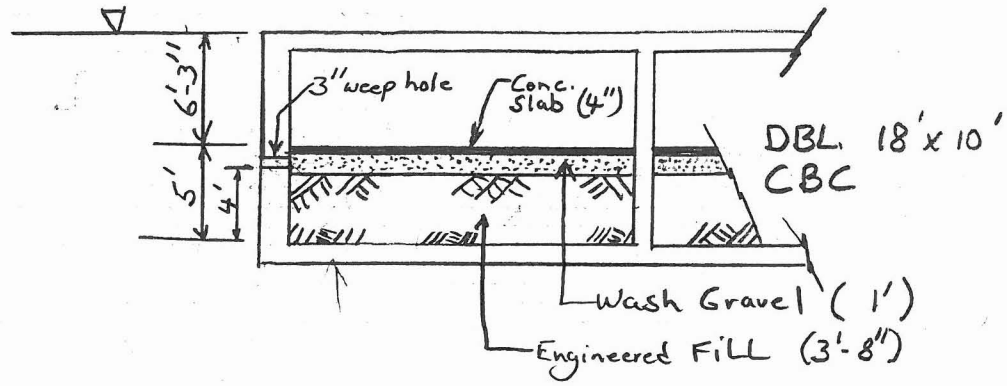

Plot of Groundwater elevations based on well readings as provided by the Flood Control District indicate the highest level to be at just under the soffit of the culvert. For these calculations assume G.W. Elev. to be @ Top of Culvert.

CBC.

$$\text{Bouyancy} = \underset{\text{(Bott width)}}{(39.5')}\ \underset{\text{(depth)}}{(10' \times 1.25' + 1.34')}\ (62.4) = 31{,}032\ \text{lb/FT.}$$

$$\text{Weight} = \text{Conc} \rightarrow (4.82\ \text{CY/FT})(27)(150\ \text{lb/CF}) = 19{,}521\ \text{lb/FT}$$

$$\text{Steel} \rightarrow = 800\ \text{lb/FT}$$

$$\text{Total} = 20{,}321\ \text{lb/FT}$$

$$\text{Deficit} = 31{,}032\ \text{lb/FT} - 20{,}321\ \text{lb/FT} = 10{,}711\ \text{lb/FT}$$

$$\text{Req. Backfill} = \frac{10{,}711\ \text{lb/FT}}{(110\ \text{lb/FT}^3)(39.50')} = 2.47'\ \text{of Cover}$$

$(110\ \text{lb/FT}^3)$

Thomas Road

Worst Case Cover W/conc. over box = 3.5' ± (64+35 ± inlet Apron)

3.5 > 2.47 OK

Worst Case Cover W/Dirt over box = 4.4' ± (64+60 Edge of Apron)

4.4' > 2.47' OK

Greiner

Job No. E002102 Project OCCC - Phase 1 Sheet 2 of 2

Subject Bouyancy Calcs (Continued)

By V. Gibbons Date 11/22/94 Checked By RAS Date 11/22/94

Temp Concrete Slab. (4")

Assume Groundwater @ Top of Box Culvert

depth = (6'-3" + (4") = 6.58'

Bouyancy Force = (18')(6.58')(62.4) = 7390.66 lb/FT

Concrete Weight = (18')(4"/12)(1')(150 lb/CF) = 900 lb/FT

Deficit = 7390.66 − 900 = 6490.66 lb/FT

Additional Conc. Req. = $\frac{6490.66}{(150)(18)(1)}$ = 2.4' (Thickness)

A conc. slab 2.8' Thick would be needed to counter uplift.

A more practical solution would be to plug the weep holes on the sides of the C.B.C. for phase 1, in order to eliminate the bouyancy force. These plugs could then be removed in phase 2 along with the fill, wash gravel, and temporary 4" slab.

A possible detail for the plug could be as follows:

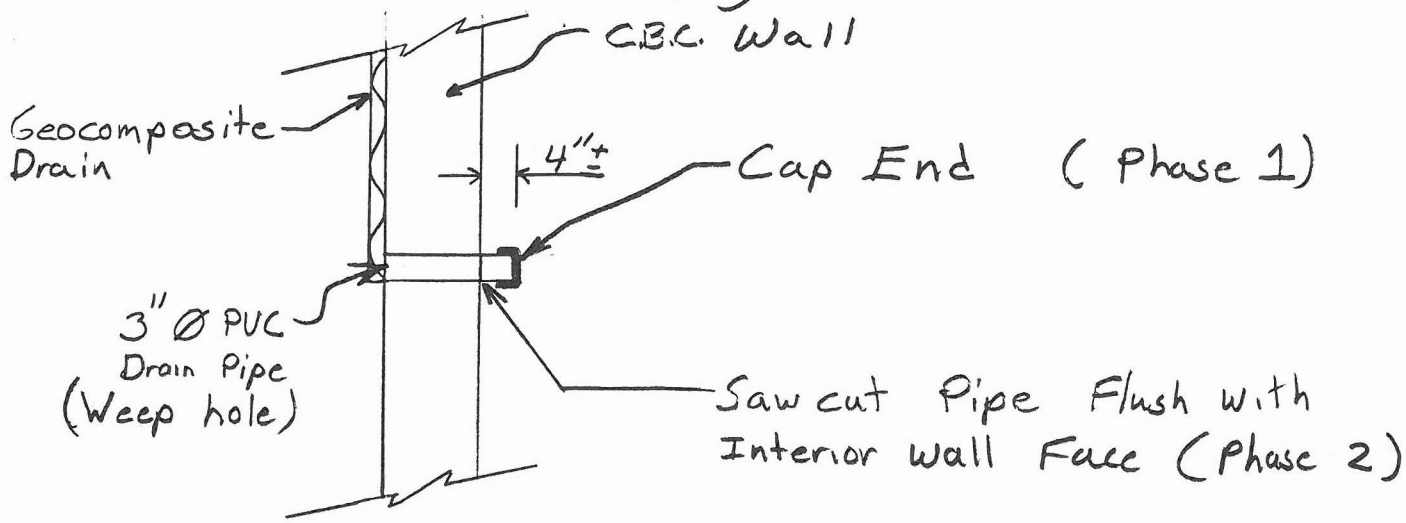

Greiner

Job No. E002102 Project OCC Sheet 1 of 1

Subject Equivalent conveyance capacity of Phase I Box Culvert

By ALB Date 11/28/94 Checked By VG Date 11/29/94

Procedure: The final existing HEC-2 model 10-6-93 was modified to reflect Phase I construction of 500 LF of box culvert. With the concrete slab and fill running through the center of the double 18'x10' CBC, the resulting equivalent box culvert is a double 18'x5' CBC.
To determine if the double 18'x5' CBC conveys equivalent flow as the existing culvert at Thomas Rd., the resulting CWSEL from the HEC-2 runs were compared.

Location	SEC. NO. Exist/Phase I	Final Existing HEC-2 Model	Phase I Modified HEC-2 Model	Difference
D/S	5914	209.17	209.17	0.00
D/S fully expanded	15950	* 209.20	208.81	-0.39
Immediately D/S (outlet)	16000	* 209.23	210.86	+1.63 **
Immediately U/S (inlet)	16500	*214.80	214.27	-0.53
U/S full flow	6517/6530	214.85	214.08	-0.77
U/S	6714	214.90	214.36	-0.54

* INTERPOLATED VALUE (SEC NO. 6307.00)

** CWSEL @ DOWNSTREAM FACE OF EXIST CULVERT = 211.57 WHICH IS 0.71' HIGHER THAN OUTLET OF NEW CULVERT (210.86). HIGHER OUTLET CWSEL IS MOVED DOWNSTREAM.

FINAL EXIST. HEC-2 MODIFIED FOR PHASE
(500 LF CBC. @ Thomas ROAD)

```
1 ****************************************
  *  HEC-2 WATER SURFACE PROFILES          *
  *                                        *
  *  Version   4.6.2;  May 1991            *
  *                                        *
  *  RUN DATE    29NOV94    TIME   09:55:27 *
  ****************************************
```

```
*************************************
*  U.S. ARMY CORPS OF ENGINEERS     *
*  HYDROLOGIC ENGINEERING CENTER    *
*  609 SECOND STREET, SUITE D       *
*  DAVIS, CALIFORNIA 95616-4687     *
*          (916) 756-1104           *
*************************************
```

```
X     X  XXXXXXX   XXXXX              XXXXX
X     X  X        X     X            X     X
X     X  X        X                        X
XXXXXXX  XXXX     X          XXXXX    XXXXX
X     X  X        X                  X
X     X  X        X     X            X
X     X  XXXXXXX   XXXXX             XXXXXXX
```

1

29NOV94 09:55:27 PAGE 1

THIS RUN EXECUTED 29NOV94 09:55:27

```
*************************************
HEC-2 WATER SURFACE PROFILES

Version   4.6.2;  May 1991
*************************************
```

```
T1      FERGUSON    GREINER, INC 10-06-93     (FILENAME = M4-2FT-D.DAT)
T2      ORIGINAL McDowell BC (1-10X10 & 1-14X10)  with original dirt channel
T3      SUB-CRITICAL FLOW M4-2FT-B                    u/s of McDowell Road
```

Cross-section numbering has been changed:
d/s face of the McDowell Rd. culverts ===> XS #726.00
u/s " " " ===> XS #1000.00
The XS numbering u/s of McDowell Rd. has been modified accordingly.
These XS #'s apply to the all other HEC-2 runs
2-5x18 CBC at Thomas Rd (Sta. 60+00 - 65+00)

ICHECK	INQ	NINV	IDIR	STRT	METRIC	HVINS	Q	WSEL	FQ
	2			.00532				180	

J2

NPROF	IPLOT	PRFVS	XSECV	XSECH	FN	ALLDC	IBW	CHNIM	ITRACE
1	0	0	0	0	0	0	6	0	

J3 VARIABLE CODES FOR SUMMARY PRINTOUT

38	43	39	4	25	26	23	24	1	42
3									

```
QT        9      4710      5470      5470      5470      5470      5470      5470      5470      5470
 Refer to the Comments after XS #766 about the discharges.
      .035      .035      .015
X1        0         7    999.99   1016.01
X3       10                          1000                1016
    184.67    950.00    184.67    999.99    170.00   1000.00    169.67   1008.00    170.00   1016.00
GR  184.67   1016.01    184.67   1066.00

       384         7    999.99   1016.01       374       394       384
        10
GR  186.71    950.00    186.71    999.99    172.04   1000.00    171.71   1008.00    172.04   1016.00
GR  186.71   1016.01    186.71   1066.00

X1      434         7    999.99   1016.01        49        51        50
X3       10
    188.36    950.00    188.36    999.99    172.31   1000.00    171.98   1008.00    172.31   1016.00
GR  188.36   1016.01    188.36   1066.00
1
 29NOV94      09:55:27                                                                          PAGE    2


       484         7    999.99   1016.01        49        51        50
X3      10
GR  190.00    950.00    190.00    999.99    173.13   1000.00    172.80   1008.00    173.13   1016.00
    190.00   1016.01    190.00   1066.00

NC                                     .3        .5
       684         7    999.99   1026.01       200       200       200
    190.00    950.00    190.00    999.99    176.50   1000.00    176.07   1013.00    176.50   1026.00
GR  190.00   1026.01    190.00   1076.00

       726         7      1000      1026        42        42        42
X3      10                                                                189       189
GR  192.00    950.00    189.00    999.99    177.11   1000.00    177.11   1013.00    177.11   1026.00
    189.00   1026.01    192.00   1076.00
 The discharges d/s of McDowell Road are 500, 750, 1000 cfs less than the u/s
    discharges for 25, 50, 100-yr event, respectively.  This is due to the
    assumption that those amount of discharges do not join the d/s channel
    flowing west along the McDowell Road.

SC    2.014        .2       2.6                10        12       274       9.2    179.85    177.11
     1000        10       987      1013       274       274       274
                            2    189.85
X3      10                                                                194       194
         2    195.20
        -7       966    193.00                972    193.00                975    194.00
BT               985    194.00               1027    194.00               1041    193.90
BT              1070    193.90
       193       966       193       972       194    984.99    193.87       985    179.85       987
GR  179.85      1013    193.87      1027       194   1027.01     193.9      1041     193.9      1070

    0.040     0.040     0.045         0         0
        9      4710      1170       200       300       400       500       600       700       800
X1   1110      14.0    973.10    1024.0     111.0     108.0     110.0       0.0       0.0         0
   998.55    193.81     0.025         0         0         0     -51.0
       10
GR  205.0     973.0     195.0    973.10     190.0     980.0     185.0     984.5     181.0     989.0
GR  181.0    1000.0     181.0    1006.0     185.0    1013.0     190.0    1018.5     195.0    1024.0
```

```
C      195.5    1030.0     195.0    1036.0     194.0    1058.0     204.0    1058.01

N        0        0        0        0.1       0.35
X       1514      14.0    974.01   1030.0     418.0     390.0     404.0      0.0       0.0        0
CI       994    194.78     0.025      0         0         0      -52.0
X3       10
C      208.6     974.0     198.6    974.01     195.0     977.0     185.0     988.0     181.1     992.0
GR     181.1    1010.0     185.0    1014.0     195.0    1023.0     198.6    1030.0     198.0    1034.5
GR     197.0    1046.0     197.0    1053.0     197.0    1057.0     207.0    1057.0

C        9      4490       950      200       300       400       500       600       700       800
X1      1912     17.0     972.4    1034.0     408.0     388.0     398.0      0.0       0.0        0
C       1010    197.74     0.025      4         4         0      -29.0
X        10
GR     210.5     912.0     205.0    912.01     200.5    912.02     203.0     926.0     203.6     948.0
GR     203.0     972.4     200.0    975.5      185.0     989.0     181.7     994.0     181.7    1011.0
1
   29NOV94      09:55:27                                                                          PAGE    3

      185.0    1015.0     200.0    1029.0     202.7    1034.0     202.0    1044.0     201.0    1055.0
GR    200.0    1064.0     210.0    1064.0

       2312      26.0     969.0    1028.0     410.0     390.0     400.0      0.0       0.0        0
CI     1000    198.70     0.025      4         4         0      -44.0
X3       10
      213.5     900.5     207.5    900.51     205.5    900.52     203.5    900.53     204.9    925.2
      204.2     961.5     204.0    969.0      203.0    971.8      200.0    974.2      195.0    979.5
GR    190.0     983.8     185.0    987.5      184.0    988.5      183.0    989.5      183.2   1000.0
      185.0    1009.5     190.0    1014.5     195.0    1019.5     200.0    1024.5     203.0    1028.0
      203.9    1036.0     203.0    1047.0     202.0    1054.0     201.0    1063.0     200.9    1070.0
GR    210.9    1070.01

        0        0        0        0.3       0.5
X1     2485     23.0     969.7    1027.5     173.0     173.0     173.0      0.0       0.0        0
CI      997    199.11     0.025      4         4         0      -56.0
        10
      213.8     904.5     203.8    904.51     204.0     922.5     204.1     929.4     204.1    937.0
GR    203.0     969.7     200.0    977.5      199.0     980.5     198.0     984.0     197.6    990.0
      197.6     991.0     183.9    991.0      183.9    1007.0     197.6    1007.0     197.6   1008.0
      198.0    1013.0     199.0    1016.0     200.0    1018.5     203.0    1027.5     203.0    1035.0
GR    203.0    1043.0     201.6    1064.0     211.6    1064.01

        0        0       0.016      0         0
X1     2515      20       963     1026        30        30        30        0         0         0
CI      995    199.19     0.025      4         4         0      -53.0
      213.90     901     203.90   901.01     204.00     926     204.00     934     203.00     963
      202.00     972     200.00     979      199.00     982     197.60     990     197.60     991
GR    184.00     991     184.00    1007      197.60    1007     199.00    1014     201.00    1019
      203.00    1026     203.00    1042      202.00    1053     201.50    1059     211.50   1059.01

X1     2530     16.0     959.8    1025.0     15.0      15.0      15.0      0.0       0.0       0.0
CI      990    199.22     0.025      4         4         0      -48.0
      213.9     901.0     203.9    901.01     203.0    959.8      197.6    980.0     197.6    991.5
      188.3     991.5     188.3    1007.5     197.6    1007.5     197.6    1018.0    200.0    1021.0
GR    203.0    1025.0     203.2    1036.0     203.0    1042.0     202.0    1050.0    201.5    1059.0
      211.5    1059.01

NC       0        0      0.025      0         0
OT       9      4410       880      200       300       400       500       600       700       800
```

X	2712	18.0	975.8	1022.0	182.0	182.0	182.0	0.0	0.0	0
CI	996	199.66	0.025	4	4	0	-59.0			
X7	10									
G	214	899	203.7	899.01	204.2	970.0	204.0	975.8	200.0	980.8
GR	195.0	985.0	190.0	990.0	188.5	991.0	188.5	1007.0	190.0	1009.5
GR	195.0	1014.8	200.0	1019.5	203.0	1022.0	203.6	1036	203.0	1047.0
G	202.0	1051.0	201.5	1057.0	211.5	1057.01				
NC	0	0	0	0.1	0.35					
X	3112	22.0	971.0	1021.0	400.0	400.0	400.0	0.0	0.0	0
C	994	200.62	0.045	4	4	0	-44.0			
X3	10									
G	214.0	893.5	204.0	893.51	203.0	900.8	203.6	908.0	203.0	917.0
G	202.0	951.0	205.0	969.5	205.4	971.0	205.0	973.0	200.0	980.0

1

GR	195.0	984.7	190.0	988.8	189.4	1000.0	190.0	1006.8	195.0	1011.5
G	200.0	1016.5	204.0	1021.0	204.5	1034.0	204.0	1045.0	203.0	1048.0
G	202.4	1060.0	212	1060.01						
QT	9	4350	810	200	300	400	500	600	700	800
X	3513	22.0	976.8	1020.8	401.0	401.0	401.0	0.0	0.0	0
C1	993	201.58	0.045	4	4	0	-67.0			
X3	10									
G	214.0	896.0	204.0	896.01	205.0	923.0	205.1	933.5	205.0	942.0
G	204.8	949.0	205.5	955.0	206.2	966.0	205.0	976.8	200.0	981.8
GR	195.0	986.8	191.0	990.8	190.8	1000.0	191.0	1007.0	195.0	1011.1
G	200.0	1015.8	205.0	1020.8	205.2	1035.0	205.0	1047.0	204.0	1051.0
G	203.4	1080.0	213.4	1080.01						
X1	3913	19.0	976.0	1022.0	400.0	400.0	400.0	0.0	0.0	0
C	1003	202.54	0.045	4	4	0	-87.0			
X3	10									
GR	215.1	898.0	210.1	898.01	205.1	898.02	204.6	942.0	205.0	967.0
G	205.8	976.0	205.0	978.5	200.0	984.1	195.0	989.2	192.0	992.5
G	191.3	1000.0	192.0	1006.5	195.0	1009.5	200.0	1015.0	205.0	1020.5
GR	206.0	1022.0	206.7	1028.5	202.4	1082.0	212.4	1082.01		
X	4313	28.0	979.5	1022.0	400.0	400.0	400.0	0.0	0.0	0
C1	989	203.50	0.045	4	0	0	-100.0			
X3	10									
G	215.1	899.0	205.1	899.01	205.0	930.5	205.1	937.0	205.0	944.0
G	204.4	959.0	205.0	971.0	205.1	977.0	205.0	979.5	200.0	985.0
GR	195.0	990.0	193.0	999.0	192.6	1000.0	193.0	1004.0	194.0	1008.0
G	195.0	1009.0	200.0	1014.5	205.0	1018.5	206.0	1020.0	207.0	1022.0
G	207.3	1025.0	207.0	1028.5	206.0	1038.0	205.0	1043.0	204.0	1052.0
GR	203.0	1058.0	202.3	1088.0	212.3	1088.01				
Q	9	3850	740	200	300	400	500	600	700	800
X1	4713	24.0	976.0	1020.5	400.0	400.0	400.0	0.0	0.0	0
CI	995	204.46	0.045	4	0	0	-95.0			
X	10									
G	215.9	915.0	213.9	915.01	210.9	915.02	205.9	915.03	206.0	972.0
GR	206.6	976.0	206.0	979.5	205.0	981.0	200.0	986.0	195.0	990.3
G	193.0	992.0	192.8	995.0	193.0	998.5	194.0	1006.0	195.0	1007.5
G	200.0	1013.5	205.0	1018.5	206.0	1020.5	206.5	1027.0	206.0	1034.8
GR	205.0	1040.5	204.0	1054.0	203.2	1085.0	213.2	1085.01		

```
         9      3540       130       200       300       400       500       600       700       800
X1    5113      23.0     977.0    1022.0     400.0     400.0     400.0       0.0       0.0         0
       998    205.42     0.045         4         0         0     -93.0
        10
GR    216.9     913.5     211.9    913.51     208.9    913.52     206.9    913.53     207.0     976.0
GR    207.2     977.0     207.0     978.0     206.0     980.0     205.0     981.5     200.0     987.5
      195.0     992.5     194.5    1000.0     195.0    1008.5     200.0    1013.0     205.0    1018.5
GR    206.0    1019.5     207.0    1022.0     207.1    1026.5     207.0    1031.0     206.0    1048.0
GR    205.0    1069.0     204.5    1095.0     214.5    1095.0
1
   29NOV94      09:55:27                                                                          PAGE     5


QT        9      3530       120       200       300       400       500       600       700       800
X1     5513      17.0     980.5    1018.5     400.0     400.0     400.0       0.0       0.0         0
       1004    206.38     0.045         4         4         0     -91.0
X3       10
GR    217.9     912.0     207.9    912.01     207.7     944.0     207.0     980.5     206.0     982.0
      205.0     982.5     200.0     987.0     196.0     991.0     195.6    1000.0     196.0    1007.0
      200.0    1010.5     205.0    1015.5     207.0    1018.5     207.8    1028.5     207.0    1054.0
GR    206.6    1085.0     216.6    1085.01

       5914      24.0     977.5    1020.0     401.0     401.0     401.0       0.0       0.0         0
CI     1007    207.34     0.045         4         4         0     -83.0
X3       10
      219.3     916.0     209.3    916.01     209.0     953.5     208.0     977.5     207.0     979.0
      206.0     980.5     205.0     982.0     200.0     988.0     199.0     990.0     198.0     991.0
GR    197.0     993.5     196.6     997.0     197.0    1000.0     197.1    1001.0     197.0    1002.0
      196.6    1007.0     197.0    1009.0     200.0    1011.5     205.0    1015.5     208.0    1020.0
      208.6    1047.0     208.0    1076.0     207.8    1086.2     217.8    1086.21
   Begin modifications for 500 LF 5x18 CBC

         0         0     0.013         0         0
X1     5950        16       970      1013        36        36        36         0         0         0
X3       10
      219.3       916     209.3    916.01     209.0     953.5     209.0       970     208.9       972
      205.0     979.0     201.5       982     196.8       991     196.8      1005     200.0      1007
GR    207.5      1014       209      1019     208.6      1047     208.0      1076     207.8    1086.2
      217.8    1086.21

NC        0         0         0       0.3       0.5
X1     6000        15       968      1032        50        50        50         0         0         0
        10
      220.0       911     210.1    911.01     210.4       940     210.0       950     210.0       968
GR    205.0     971.5       200     977.5     196.8     981.6     196.8    1018.4       200    1022.5
        205    1028.5       210      1032       209      1050     208.5      1075       218   1075.01

NC        0         0     0.013         0         0
        1      3470
     1.25      1.70      2.60         0     36.83      0.83       180         0     198.0     196.8
X1     6500        12       968      1032       500       500       500         0         0         0
X2        0         0         1    203.00     210.7         0         0         0         0         0
        5       963    211.00    203.00     981.5     210.9    203.00      1000    210.85    203.00
    1018.5    210.77    203.00      1037     210.7    203.00
GR      221       905       211    905.01       210       958     210.5       968       210       970
      210       980       198     981.6       198    1018.4       210      1020       210      1032
    209.7      1084       220   1084.01

NC        0         0     0.013         0         0
```

```
         1      3470
X1    6530        15       976      1019        30        30        30         0         0         0
X3      10
        220       908     210.5    908.01     210.7     931.0     211.0     973.0     211.5     976.0
GR    209.5     981.5     203.0     987.5     200.2     999.0     200.2      1006     206.0    1012.5
GR      211      1017     211.5      1019       210      1030     210.0    1080.0     220.0   1080.01
   End modifications for  500 LF 5x18 CBC
1
   29NOV94      09:55:27                                                                          PAGE    6


NC        0         0     0.025       0.1      0.35
       6714        29     979.0    1017.5     197.0     197.0     197.0       0.0       0.0         0
CI       -1    208.24         0         0         0         0     -60.0
X3       10
        224       898     214.0    898.01     213.0     901.0     212.0     905.5     211.0     955.0
      211.0     958.0     211.4     969.5     211.0     979.0     210.0     981.0     205.0     986.5
GR    201.0     991.0     200.3    1000.0     201.1    1007.0     205.0    1010.5     210.0    1015.5
      211.0    1017.5     211.3    1026.5     211.0    1035.5     210.8    1043.0     211.0    1050.0
      212.0    1078.5     212.7    1081.5     212.0    1083.5     210.0    1086.0     208.0    1089.5
GR    207.6    1092.5     209.0    1095.0     210.0    1096.5       220   1096.51

          9      3330        20       200       300       400       500       600       700       800
X1     7115      30.0     979.0    1022.0     401.0     401.0     401.0       0.0       0.0         0
CI       -1    209.18         0         0         0         0     -60.0
         10
      222.1     904.5     212.1    904.51     212.0     910.0     211.9     912.0     212.0     915.0
GR    212.4     930.0     212.0     950.5     211.8     954.5     212.0     959.2     213.0     973.5
      213.1     976.5     213.0     979.0     212.0     981.5     211.5     982.5     210.0     983.5
      205.0     989.0     201.0     995.5     200.6    1000.0     201.0    1009.5     205.0    1012.5
GR    210.0    1018.5     211.0    1021.0     212.0    1022.0     213.0    1068.5     213.5    1077.5
GR    213.0    1086.0     210.0    1090.5     208.1    1095.0     210.0    1100.0     220.0   1100.01

          9      3310        20       200       300       400       500       600       700       800
X1     7515      33.0     979.5    1022.0     400.0     400.0     400.0       0.0       0.0         0
         -1    210.12         0         0         0         0     -60.0
         10
GR    224.0     902.5     220.0    902.51     214.0    902.52     214.0     903.5     213.0     921.5
      213.3     931.0     213.0     979.5     210.0     982.0     205.0     988.0     204.0     990.0
      203.0     992.0     202.0     994.5     201.0     996.0     200.9    1000.0     201.0    1007.5
GR    205.0    1011.0     210.0    1016.0     211.0    1018.0     212.0    1020.3     213.0    1022.0
GR    213.4    1033.0     213.0    1048.0     213.0    1050.0     214.0    1080.5     213.0    1083.5
      212.0    1085.0     210.0    1087.0     209.0    1090.0     208.9    1093.0     209.0    1095.0
      210.0    1096.5     212.0    1100.5     222.0   1100.51

       7715      32.0     978.0    1021.0     200.0     200.0     200.0       0.0       0.0         0
         -1    210.97         0         0         0         0     -60.0
X3       10
      224.5     900.0     214.5    900.01     214.0     918.5     214.0     920.0     214.4     950.0
      214.0     978.0     212.0     982.0     210.0     984.0     205.0     989.5     204.0     991.5
GR    202.0     993.0     201.5    1000.0     203.0    1007.0     205.0    1009.5     210.0    1014.0
GR    214.0    1021.0     214.4    1034.0     214.0    1049.0     213.9    1051.0     214.0    1054.0
      215.0    1075.0     215.2    1081.0     215.0    1087.0     213.0    1091.0     212.0    1091.5
      211.0    1094.0     211.0    1101.0     214.0    1105.5     214.5    1108.0     214.0    1109.0
GR    212.5    1123.0     222.5   1123.01

       7916      25.0     978.0    1019.5     201.0     201.0     201.0       0.0       0.0         0
CI       -1    211.91         0         0         0         0     -60.0
X3       10
```

```
     225.6     901.5     215.6    901.51     215.0     918.0     215.0     921.0     215.1     930.0
GR   216.0     978.0     215.0     980.5     210.0     986.0     205.0     991.5     204.0     993.0
     203.0     994.5     202.1    1000.0     203.0    1005.5     205.0    1007.5     210.0    1012.5
     211.0    1014.0     212.0    1015.5     213.0    1016.5     214.0    1018.0     215.0    1019.5
GR   215.6    1026.5     215.0    1052.0     215.4   1052.01     215.0    1089.0     225.0   1089.01
1
   29NOV94     09:55:27                                                                    PAGE    7


       9      2300       100       200       300       400       500       600       700       800
X1  8317      26.0     973.0    1020.5     401.0     401.0     401.0       0.0       0.0         0
      -1    213.79         0         0         0         0    -60.0
      10
GR  227.7     905.5     222.7    905.51     217.7    905.52     218.0     952.5     219.0     962.0
GR  219.4     968.0     219.0     973.0     218.0     977.0     217.0     978.5     216.0     980.0
    215.0     980.5     210.0     986.8     205.0     993.0     204.0     995.0     203.0    1000.0
GR  205.0    1006.0     210.0    1011.0     215.0    1016.5     216.0    1019.0     217.0    1020.5
GR  218.0    1054.0     218.6    1068.0     218.0    1080.0     217.0    1083.0     216.0    1086.0
    226.0   1086.01

X1  8717      31.0     976.5    1024.0     400.0     400.0     400.0       0.0       0.0         0
      -1    215.66         0         0         0         0    -60.0
      10
GR  230.1     904.5     220.1    904.51     220.0     909.0     220.0     914.0     220.4     928.0
GR  220.0     942.5     219.9     945.5     220.0     949.0     221.0     965.0     221.6     972.5
    221.0     976.5     220.0     978.0     215.0     982.5     210.0     988.5     205.0     992.0
    204.0     994.5     204.0    1000.0     204.0    1005.5     205.0    1007.0     210.0    1011.5
GR  215.0    1017.0     220.0    1022.0     221.0    1024.0     221.4    1029.5     221.0    1040.0
    220.9    1045.0     221.0    1050.0     221.2    1065.0     221.0    1080.0     220.0    1084.0
    230.0   1084.01

X1  8859        21       974      1024       142       142       142         0         0         0
      -1    216.33         0         0         0         0    -60.0
X5    10
GR  231.3       902     221.3    902.01     221.0       912     221.4       926     221.0       939
    221.3       966     221.0       974     220.0       976     210.0       987     205.0       990
    204.6       993     204.6      1002     205.0      1004     220.0      1020     221.0      1022
GR  222.0      1024     222.4      1032     222.0      1059     221.0      1076     220.0      1085
    230.0   1085.01

NC      0         0         0       0.3       0.5
X1   8977        19       976      1026       118       118       118       0.0       0.0         0
      -1    216.88         0         0         0         0    -60.0
X5    10
GR  232.0       900     222.0    900.01     222.0       912     222.5       924     221.6       942
    222.0       956     222.4       966     222.0       976     213.9    983.55     213.9       993
    205.9       993     205.9      1010     213.9      1010     213.9      1015     215.9      1015
GR  222.0      1026     222.0      1084     221.5      1090     232.0   1090.01

        0         0     0.016         0         0
QT      9      2270       100       200       300       400       500       600       700       800
SB   1.25      1.69       2.6         0        17      3.83    105.36         0    206.49    205.90
    9037        16       974      1029        60        60        60       0.0       0.0         0
      -1    217.16     0.045         0         0         0    -60.0
X2      0         0         1    214.49     222.5         0         0         0         0         0
     15       927     222.6     222.6       935     222.5     222.5       935     222.1     222.1
    974     222.6     222.6       983     222.6    214.49       983     223.9    214.49       993
BT  223.9    214.49       993     223.9    206.49      1010     223.9    206.49      1010     223.9
BT 214.49      1014     223.9    214.49      1014     222.5     216.5      1022     222.5     221.0
```

```
I      1029     222.5     222.5      1065     222.5     222.5
GR    233.0       927     222.6    927.01     222.5       935     222.1       935     222.6       974
C    214.49    982.05    214.49       993    206.49       993    206.49      1010    214.49      1010
1
   29NOV94     09:55:27                                                                          PAGE    8

GR   214.49      1014     216.5      1014     221.0      1022     222.5      1029     222.5      1065
GR    233.0   1065.01

I        0         0     0.028         0         0
QT       9      2270       100       200       300       400       500       600       700       800
X1    9118      27.0     973.0    1025.5        81        81        81       0.0       0.0         0
         -1    217.54     0.045         0         0         0     -60.0
X3       10
GR    233.0     927.0     230.0    927.01     227.0    927.02     223.0    927.03     224.0     965.5
      224.4     969.5     224.0     973.0     223.0     975.0     222.0     976.8     221.0     978.0
GR    220.0     979.5     215.0     984.5     210.0     990.0     207.0     992.0     205.6    1000.0
GR    207.0    1007.0     210.0    1010.8     215.0    1016.0     220.0    1021.5     223.0    1025.5
      223.6    1039.0     223.0    1052.0     220.0    1055.5     221.0    1065.0     222.0    1068.5
      222.3    1084.0     233.3   1084.01

X1       0         0         0       0.1      0.35
      9318      30.0     979.0    1024.0     200.0     200.0     200.0       0.0       0.0         0
CI       -1    218.48         0         0         0         0     -60.0
X3       10
      233.9     929.0     223.9    929.01     224.0     959.5     225.0     964.5     225.6     971.5
      225.0     979.0     224.0     982.8     223.0     985.0     220.0     989.0     215.0     991.0
GR    210.0     994.0     208.0     995.0     206.4    1000.0     208.0    1006.0     210.0    1008.0
      215.0    1011.0     220.0    1017.0     225.0    1024.0     225.8    1033.0     225.0    1043.0
      224.9    1045.0     225.0    1049.0     225.0    1051.0     220.0    1059.5     219.5    1062.0
GR    220.0    1065.0     222.0    1067.0     223.0    1069.0     223.2    1084.5     233.2   1084.51

         9      1700       100       200       300       400       500       600       700       800
X1    9518      27.0     975.1    1025.0     200.0     200.0     200.0       0.0       0.0         0
CI       -1    219.41         0         0         0         0     -60.0
         10
      235.3     929.5     225.3    929.51     225.0     944.0     226.0     964.5     227.0     971.0
GR    227.1     973.1     227.0     975.1     226.0     978.8     225.0     980.3     220.0     985.0
      215.0     990.5     210.0     996.0     207.2    1000.0     208.0    1003.5     210.0    1005.0
      215.0    1008.0     220.0    1013.0     225.0    1019.0     226.0    1021.0     227.0    1025.0
GR    227.2    1034.8     225.0    1054.0     220.0    1061.0     220.0    1067.0     223.0    1071.0
GR    224.5    1084.0     234.5   1084.01

         9      1700       100       200       300       400       500       600       700       800
X1    9919      29.0     967.8    1030.0     401.0     401.0     401.0       0.0       0.0         0
         -1    221.96         0         0         0         0     -60.0
         10
GR    238.8     933.0     228.8    933.01     228.8     958.0     228.0     967.8     227.0     968.5
      226.0     973.0     225.0     975.0     223.0     979.5     220.0     985.5     215.0     992.0
      213.0     993.5     212.2    1000.0     213.0    1001.5     214.0    1006.0     215.0    1007.0
GR    220.0    1011.5     225.0    1018.0     227.0    1023.0     229.0    1027.0     230.0    1030.0
GR    230.2    1038.5     230.0    1048.5     225.0    1057.0     223.0    1059.0     223.0    1063.0
      225.0    1065.5     227.0    1070.0     227.1    1080.5     237.1   1080.51

X1   10119      21.0     976.0    1023.0     200.0     200.0     200.0       0.0       0.0       0.0
         -1    223.70         0         0         0         0     -60.0
         10
GR    240.3     934.5     230.3    934.51     230.4     962.0     230.0     976.0     225.0     984.8
      220.0     993.5     215.0    1000.0     217.0    1004.0     218.0    1007.5     220.0    1008.5
```

```
G     225.0     1013.0     229.0     1019.5     230.0     1023.0     230.7     1034.0     230.0     1048.0
1
  29NOV94     09:55:27                                                                                PAGE    9


GR    225.0     1058.0     224.7     1060.5     225.0     1064.0     228.0     1066.0     229.0     1076.0
G     239.0    1076.01

X1    10319       32.0     972.5     1028.0     200.0      200.0     200.0       0.0       0.0         0
C        -1     225.43         0          0         0          0     -60.0
X        10
GR    243.0      948.0     233.0      948.01     232.6     948.02     232.0     972.5     231.0     974.0
G     230.0      978.0     225.0      990.0      220.0     995.0      219.0     996.0     218.0     998.0
G     217.8     1000.0     218.0     1001.0      219.0     1002.0     220.0     1003.0    225.0     1010.0
GR    230.0     1019.0     231.0     1021.5      232.0     1024.0     232.8     1028.0    232.9     1034.0
GR    232.8     1043.0     233.0     1054.0      233.0     1055.0     232.0     1056.5    230.0     1058.0
G     229.0     1060.0     228.6     1062.0      229.0     1064.0     230.0     1065.0    231.0     1067.5
G     231.0     1070.0     241.0     1070.01

X     10720       34.0     981.0     1019.5      401.0      401.0     401.0       0.0       0.0         0
C        -1     228.91         0          0         0          0     -60.0
X3       10
G     246.0      955.0     236.0      955.01     236.0     964.0      236.0     969.5     237.0     979.0
G     237.1      981.0     236.0      984.5      235.0     986.5      230.0     993.5     225.0     995.5
GR    221.0      997.0     220.5     1000.0      221.0     1003.5     225.0     1005.0    230.0     1010.5
GR    231.0     1012.0     232.0     1013.5      233.0     1015.0     234.0     1016.0    235.0     1017.0
G     236.0     1019.5     236.5     1037.0      236.0     1052.5     235.0     1054.5    234.0     1056.0
G     233.0     1057.0     232.0     1058.5      231.0     1059.0     230.1     1064.0    231.0     1068.0
GR    232.0     1069.0     233.0     1070.0      233.0     1073.5     243.0    1073.51

X     11120       32.0     976.0     1028.0      400.0      400.0     400.0       0.0       0.0         0
CI       -1     232.37         0          0         0          0     -60.0
X3       10
G     249.6      949.5     239.6      949.51     240.0     953.5      241.0     970.5     241.3     973.0
G     241.0      976.0     240.0      978.5      239.0     981.0      238.0     982.0     237.0     983.5
GR    236.0      984.5     235.0      986.0      230.0     992.5      225.0     996.0     222.0     997.0
G     222.0     1004.0     225.0     1005.0      230.0     1008.5     231.0     1011.5    232.0     1014.0
G     233.0     1015.0     234.0     1017.0      235.0     1018.0     236.0     1020.0    237.0     1021.5
GR    238.0     1023.0     239.0     1025.5      240.0     1028.0     240.5     1038.5    240.0     1047.5
G     239.7     1049.0     249.7     1049.01

X     11408       16.0     978.0     1022.3      288.0      288.0     288.0       0.0       0.0         0
CI       -1     234.87         0          0         0          0     -60.0
X        10
G     251.6      941.5     241.6      941.51     241.0     954.5      241.0     973.0     241.0     978.0
GR    240.0      981.5     235.0      990.0      230.0     994.8      226.0     1000.0    230.0     1009.0
G     235.0     1011.0     240.0     1018.0      241.0     1022.3     241.5     1035.5    241.0     1049.0
G     251.0    1049.01

N        0          0         0         0.1       0.35
X     11558         18       979       1020      149.2      151.2     150.0       0.0       0.0         0
C1       -1     236.17         0          0         0          0     -60.0
X3       10
G     253.00       951    243.00      951.01    242.80       964    243.00       979    238.47       992
G     238.47       993    229.22       993      229.22    1011.17    237.22    1011.17    237.22      1013
GR    238.47      1013    238.47      1014      243.00      1020    243.10      1023    242.70      1024
G     243.10      1032    242.40      1046      253.00    1046.01
1
  29NOV94     09:55:27                                                                                PAGE   10
```

N	0	0	0.016	0	0					
C	9	1640	100	200	300	400	500	600	700	800
SB	1.25	1.69	2.6	0	18.17	5.00	105.36	0	229.70	229.22
X1	11690	22	976.0	1017.0	129.0	136.3	132.0	0.0	0.0	0
C	-1	237.31	0.045	0	0	0	-60.0			
X	0	0	1	237.70	243.1	0	0	0	0	0
BT	16	950	244.0	244.00	974	244.0	243.70	976	244.0	243.60
B	989	244.0	238.95	990	244.0	238.95	990	244.0	237.70	1010
B	244.0	237.70	1010	244.0	238.95	1011	244.0	238.95	1015	244.0
BT	243.00	1017	244.0	243.80	1018	244.0	243.40	1031	244.0	244.00
BT	1042	244.0	244.00	1074	243.1	243.10	1075	243.5	243.50	
C	254.0	939	244.3	939.01	244.0	950	243.7	974	243.6	976
GR	238.95	989	238.95	990	229.7	990	229.7	1008.17	237.7	1008.17
GR	237.7	1010	238.95	1010	238.95	1011	243.0	1015	243.8	1017
C	243.4	1018	244.0	1031	244.0	1042	243.1	1074	243.5	1075
C	243.6	1080	254.0	1080.01						

1

29NOV94 09:55:27 PAGE 11

SECNO	DEPTH	CWSEL	CRIWS	WSELK	EG	HV	HL	OLOSS	L-BANK ELEV
Q	QLOB	QCH	QROB	ALOB	ACH	AROB	VOL	TWA	R-BANK ELEV
TIME	VLOB	VCH	VROB	XNL	XNCH	XNR	WTN	ELMIN	SSTA
SLOPE	XLOBL	XLCH	XLOBR	ITRIAL	IDC	ICONT	CORAR	TOPWID	ENDST

*PROF 1

ECNO .000
3720 CRITICAL DEPTH ASSUMED

70 ENCROACHMENT STATIONS= 1000.0 1016.0 TYPE= 1 TARGET= 16.000

3495 OVERBANK AREA ASSUMED NON-EFFECTIVE, ELLEA= 100000.00 ELREA= 100000.00

.000	14.03	183.70	183.70	180.00	190.70	7.00	.00	.00	100000.00
4710.0	.0	4710.0	.0	.0	221.9	.0	.0	.0	100000.00
.00	.00	21.23	.00	.000	.015	.000	.000	169.67	1000.00
.005214	0.	0.	0.	0	11	0	.00	16.00	1016.00

ECNO 384.000
.35 MINIMUM SPECIFIC ENERGY
3720 CRITICAL DEPTH ASSUMED

95 OVERBANK AREA ASSUMED NON-EFFECTIVE, ELLEA= 186.71 ELREA= 186.71

384.000	13.85	185.56	185.56	.00	192.74	7.18	2.03	.00	186.71
4710.0	.0	4710.0	.0	.0	219.0	.0	1.9	.1	186.71
.00	.00	21.51	.00	.000	.015	.000	.000	171.71	999.99
.005384	374.	384.	394.	2	8	0	.00	16.02	1016.01

*SECNO 434.000
85 MINIMUM SPECIFIC ENERGY
20 CRITICAL DEPTH ASSUMED

3495 OVERBANK AREA ASSUMED NON-EFFECTIVE, ELLEA= 188.36 ELREA= 188.36

434.000	14.06	186.04	186.04	.00	193.00	6.96	.26	.00	188.36
4710.0	.0	4710.0	.0	.0	222.5	.0	2.2	.2	188.36
.01	.00	21.17	.00	.000	.015	.000	.000	171.98	999.99
.005177	49.	50.	51.	0	5	0	.00	16.02	1016.01

*SECNO 484.000
3685 20 TRIALS ATTEMPTED WSEL,CWSEL
3 23 PROBABLE MINIMUM SPECIFIC ENERGY
3 20 CRITICAL DEPTH ASSUMED
1

29NOV94 09:55:27 PAGE 12

SECNO	DEPTH	CWSEL	CRIWS	WSELK	EG	HV	HL	OLOSS	L-BANK ELEV
Q	QLOB	QCH	QROB	ALOB	ACH	AROB	VOL	TWA	R-BANK ELEV
TIME	VLOB	VCH	VROB	XNL	XNCH	XNR	WTN	ELMIN	SSTA
SLOPE	XLOBL	XLCH	XLOBR	ITRIAL	IDC	ICONT	CORAR	TOPWID	ENDST

3 25 OVERBANK AREA ASSUMED NON-EFFECTIVE, ELLEA= 190.00 ELREA= 190.00

484.000	14.03	186.83	186.83	.00	193.82	7.00	.26	.00	190.00
4710.0	.0	4710.0	.0	.0	221.9	.0	2.5	.2	190.00
.01	.00	21.23	.00	.000	.015	.000	.000	172.80	999.99
.005214	49.	50.	51.	20	5	0	.00	16.02	1016.01

HV= .300 CEHV= .500
*SECNO 684.000
3280 CROSS SECTION 684.00 EXTENDED 5.19 FEET

3301 HV CHANGED MORE THAN HVINS

3302 WARNING: CONVEYANCE CHANGE OUTSIDE OF ACCEPTABLE RANGE, KRATIO = 4.24

684.000	19.12	195.19	.00	.00	195.87	.68	.15	1.89	190.00
4710.0	525.6	3658.8	525.6	259.3	491.7	259.3	5.3	.5	190.00
.02	2.03	7.44	2.03	.035	.015	.035	.000	176.07	950.00
.000289	200.	200.	200.	5	0	0	.00	126.00	1076.00

ECNO 726.000
30 CROSS SECTION 726.00 EXTENDED 3.03 FEET

726.000	17.92	195.03	.00	.00	196.05	1.02	.01	.17	177.11
4710.0	324.5	4061.0	324.5	226.4	465.8	226.4	6.2	.6	177.11
.02	1.43	8.72	1.43	.035	.015	.035	.000	177.11	950.00
.000165	42.	42.	42.	2	0	0	.00	126.00	1076.00

ECIAL CULVERT

SC	CUNO	CUNV	ENTLC	COFQ	RDLEN	RISE	SPAN	CULVLN	CHRT	SCL	ELCHU	ELCHD
	2	.014	.20	2.60	.00	10.00	12.00	274.00	9	2	179.85	177.11

CHART 9 - BOX CULVERT WITH FLARED WINGWALL AND INLET TOP EDGE BEVEL
SCALE 2 - WINGWALL FLARED 18 TO 33.7 DEGREES; INLET TOP EDGE BEVEL = 0.083D

*SECNO 1000.000
WATER EL=X5 CARD= 195.200
80 CROSS SECTION 1000.00 EXTENDED 2.20 FEET

1000.000	15.35	195.20	.00	.00	196.88	1.68	.06	.33	179.85
4710.0	51.1	4325.6	333.3	52.0	399.1	172.0	11.1	1.3	179.85
.02	.98	10.84	1.94	.035	.015	.035	.000	179.85	966.00
.000314	274.	274.	274.	0	0	0	.00	104.00	1070.00

1

SECNO	DEPTH	CWSEL	CRIWS	WSELK	EG	HV	HL	OLOSS	L-BANK ELEV
Q	QLOB	QCH	QROB	ALOB	ACH	AROB	VOL	TWA	R-BANK ELEV
TIME	VLOB	VCH	VROB	XNL	XNCH	XNR	WTN	ELMIN	SSTA
SLOPE	XLOBL	XLCH	XLOBR	ITRIAL	IDC	ICONT	CORAR	TOPWID	ENDST

*SECNO 1110.000

01 HV CHANGED MORE THAN HVINS

02 WARNING: CONVEYANCE CHANGE OUTSIDE OF ACCEPTABLE RANGE, KRATIO = .29

1110.000	14.99	195.99	.00	.00	197.13	1.13	.08	.16	195.00
4710.0	.0	4600.6	109.4	.0	532.4	41.7	12.6	1.6	195.00
.03	.02	8.64	2.63	.040	.045	.040	.000	181.00	973.09
.003826	111.	110.	108.	3	0	0	.00	84.91	1058.00

HV= .100 CEHV= .350
*SECNO 1514.000

95 OVERBANK AREA ASSUMED NON-EFFECTIVE, ELLEA= 198.60 ELREA= 198.60

1514.000	16.46	197.56	.00	.00	198.61	1.05	1.48	.01	198.60
4710.0	.0	4710.0	.0	.0	572.8	.0	17.9	2.2	198.60
.04	.00	8.22	.00	.000	.045	.000	.000	181.10	974.87
.003506	418.	404.	390.	3	0	0	.00	53.11	1027.98

*SECNO 1912.000

95 OVERBANK AREA ASSUMED NON-EFFECTIVE, ELLEA= 203.00 ELREA= 202.70

1912.000	17.28	198.98	.00	.00	199.81	.83	1.18	.02	203.00
4490.0	.0	4490.0	.0	.0	613.7	.0	23.3	2.7	202.70
.06	.00	7.32	.00	.000	.045	.000	.000	181.70	976.42
.002516	408.	398.	388.	2	0	0	.00	51.63	1028.05

*SECNO 2312.000

95 OVERBANK AREA ASSUMED NON-EFFECTIVE, ELLEA= 204.00 ELREA= 203.00

2312.000	17.02	200.02	.00	.00	200.99	.98	1.13	.05	204.00
4490.0	.0	4490.0	.0	.0	565.5	.0	28.7	3.2	203.00
.07	.00	7.94	.00	.000	.045	.000	.000	183.00	974.19
.003188	410.	400.	390.	2	0	0	.00	50.33	1024.52

1

SECNO	DEPTH	CWSEL	CRIWS	WSELK	EG	HV	HL	OLOSS	L-BANK ELEV
Q	QLOB	QCH	QROB	ALOB	ACH	AROB	VOL	TWA	R-BANK ELEV
TIME	VLOB	VCH	VROB	XNL	XNCH	XNR	WTN	ELMIN	SSTA
SLOPE	XLOBL	XLCH	XLOBR	ITRIAL	IDC	ICONT	CORAR	TOPWID	ENDST

CCHV= .300 CEHV= .500

SECNO 2485.000

3301 HV CHANGED MORE THAN HVINS

3302 WARNING: CONVEYANCE CHANGE OUTSIDE OF ACCEPTABLE RANGE, KRATIO = .33

95 OVERBANK AREA ASSUMED NON-EFFECTIVE, ELLEA= 203.00 ELREA= 203.00

2485.000	16.10	200.00	199.79	.00	203.50	3.50	1.25	1.26	203.00
4490.0	.0	4490.0	.0	.0	299.3	.0	30.4	3.3	203.00
.07	.00	15.00	.00	.000	.045	.000	.000	183.90	977.49
.029247	173.	173.	173.	6	11	0	.00	41.02	1018.51

*SECNO 2515.000

85 20 TRIALS ATTEMPTED WSEL,CWSEL

10 WSEL ASSUMED BASED ON MIN DIFF

2515.000	16.83	200.83	199.92	.00	203.89	3.06	.21	.25	203.00
4490.0	.0	4490.0	.0	.0	319.8	.0	30.6	3.4	203.00
.07	.00	14.04	.00	.000	.016	.000	.000	184.00	976.10
.003046	30.	30.	30.	20	5	0	.00	42.48	1018.57

SECNO 2530.000

7185 MINIMUM SPECIFIC ENERGY

20 CRITICAL DEPTH ASSUMED

2530.000	13.10	201.40	201.40	.00	204.29	2.89	.05	.05	203.00
4490.0	.0	4490.0	.0	.0	329.4	.0	30.8	3.4	203.00
.07	.00	13.63	.00	.000	.016	.000	.000	188.30	965.78
.003129	15.	15.	15.	4	16	0	.00	57.09	1022.87

SECNO 2712.000

3301 HV CHANGED MORE THAN HVINS

3302 WARNING: CONVEYANCE CHANGE OUTSIDE OF ACCEPTABLE RANGE, KRATIO = 1.50

```
SECNO     DEPTH     CWSEL     CRIWS     WSELK     EG        HV        HL        OLOSS     L-BANK ELEV
Q         QLOB      QCH       QROB      ALOB      ACH       AROB      VOL       TWA       R-BANK ELEV
TIME      VLOB      VCH       VROB      XNL       XNCH      XNR       WTN       ELMIN     SSTA
SLOPE     XLOBL     XLCH      XLOBR     ITRIAL    IDC       ICONT     CORAR     TOPWID    ENDST


3495 OVERBANK AREA ASSUMED NON-EFFECTIVE, ELLEA=      204.00 ELREA=      203.00

 2712.000     15.41    203.91       .00       .00    205.14      1.23       .36       .50    204.00
   4410.0        .0    4362.1      47.9        .0     488.1      33.9      32.5       3.7    203.00
      .08       .00      8.94      1.41      .000      .025      .040      .000    188.50    975.91
  .001340      182.      182.      182.         3         0         0       .00     81.09   1057.00


 HV=     .100 CEHV=     .350
 ECNO 3112.000

3265 DIVIDED FLOW


3495 OVERBANK AREA ASSUMED NON-EFFECTIVE, ELLEA=      205.40 ELREA=      204.00

 3112.000     15.01    204.41       .00       .00    205.78      1.38       .59       .05    205.40
   4410.0        .0    4364.6      45.4        .0     461.0      27.2      37.2       4.4    204.00
      .09       .00      9.47      1.67      .000      .025      .040      .000    189.40    973.83
  .001633      400.      400.      400.         2         0         0       .00     81.76   1060.00


 ECNO 3513.000

3265 DIVIDED FLOW

 3513.000     14.21    205.01       .00       .00    206.55      1.54       .71       .06    205.00
   4350.0      13.9    4263.3      72.7      14.5     423.5      39.8      41.6       5.3    205.00
      .10       .96     10.07      1.83      .040      .025      .040      .000    190.80    896.01
  .001917      401.      401.      401.         0         0         0       .00    113.67   1080.00


 ECNO 3913.000

3495 OVERBANK AREA ASSUMED NON-EFFECTIVE, ELLEA=      205.80 ELREA=      206.00

 3913.000     14.36    205.66       .00       .00    207.54      1.88       .87       .12    205.80
   4350.0        .0    4350.0        .0        .0     395.4        .0      45.6       6.1    206.00
      .11       .00     11.00       .00      .000      .025      .000      .000    191.30    976.43
  .002507      400.      400.      400.         2         0         0       .00     45.06   1021.49
```



```
SECNO     DEPTH     CWSEL     CRIWS     WSELK     EG        HV        HL        OLOSS     L-BANK ELEV
Q         QLOB      QCH       QROB      ALOB      ACH       AROB      VOL       TWA       R-BANK ELEV
TIME      VLOB      VCH       VROB      XNL       XNCH      XNR       WTN       ELMIN     SSTA
```

SLOPE	XLOBL	XLCH	XLOBR	ITRIAL	IDC	ICONT	CORAR	TOPWID	ENDST

ECNO 4313.000

3301 HV CHANGED MORE THAN HVINS

3302 WARNING: CONVEYANCE CHANGE OUTSIDE OF ACCEPTABLE RANGE, KRATIO = 1.57

4313.000	14.96	207.56	.00	.00	208.27	.71	.61	.12	205.00
4350.0	469.0	3253.3	627.7	211.0	423.8	221.8	51.4	7.1	207.00
.13	2.22	7.68	2.83	.040	.025	.040	.000	192.60	899.01
.001023	400.	400.	400.	6	0	0	.00	189.00	1088.01

ECNO 4713.000

4713.000	15.22	208.02	.00	.00	208.66	.64	.39	.01	206.60
3850.0	221.7	3056.5	571.8	125.0	429.9	224.5	58.9	8.8	206.00
.15	1.77	7.11	2.55	.040	.025	.040	.000	192.80	915.03
.000915	400.	400.	400.	2	0	0	.00	169.98	1085.00

ECNO 5113.000

5113.000	13.87	208.37	.00	.00	209.07	.69	.39	.02	207.20
3540.0	133.1	2947.6	459.4	90.1	405.6	198.2	65.7	10.4	207.00
.17	1.48	7.27	2.32	.040	.025	.040	.000	194.50	913.52
.001022	400.	400.	400.	2	0	0	.00	181.48	1095.00

ECNO 5513.000

3301 HV CHANGED MORE THAN HVINS

5513.000	12.95	208.55	.00	.00	209.76	1.21	.51	.18	207.00
3530.0	103.8	3245.1	181.2	67.7	352.8	95.0	71.2	12.0	207.00
.18	1.53	9.20	1.91	.040	.025	.040	.000	195.60	912.01
.001643	400.	400.	400.	2	0	0	.00	172.99	1085.00

ECNO 5914.000

5914.000	12.57	209.17	.00	.00	210.47	1.30	.68	.03	208.00
3530.0	19.6	3419.9	90.5	17.8	367.8	61.6	75.6	13.5	208.00
.19	1.10	9.30	1.47	.040	.025	.040	.000	196.60	932.43
.001752	401.	401.	401.	2	0	0	.00	153.77	1086.20

1

SECNO	DEPTH	CWSEL	CRIWS	WSELK	EG	HV	HL	OLOSS	L-BANK ELEV
Q	QLOB	QCH	QROB	ALOB	ACH	AROB	VOL	TWA	R-BANK ELEV
TIME	VLOB	VCH	VROB	XNL	XNCH	XNR	WTN	ELMIN	SSTA
SLOPE	XLOBL	XLCH	XLOBR	ITRIAL	IDC	ICONT	CORAR	TOPWID	ENDST

ECNO 5950.000

3365 DIVIDED FLOW

301 HV CHANGED MORE THAN HVINS

3302 WARNING: CONVEYANCE CHANGE OUTSIDE OF ACCEPTABLE RANGE, KRATIO = 1.64

3495 OVERBANK AREA ASSUMED NON-EFFECTIVE, ELLEA= 209.00 ELREA= 200.00

5950.000	12.01	208.81	206.41	.00	210.72	1.91	.04	.21	209.00
3530.0	.0	3434.0	96.0	.0	305.8	64.3	76.0	13.6	200.00
.19	.00	11.23	1.49	.000	.013	.040	.000	196.80	972.15
.000649	36.	36.	36.	4	8	0	.00	100.59	1086.20

CHV= .300 CEHV= .500
SECNO 6000.000

301 HV CHANGED MORE THAN HVINS

3302 WARNING: CONVEYANCE CHANGE OUTSIDE OF ACCEPTABLE RANGE, KRATIO = 2.87

6000.000	14.06	210.86	.00	.00	211.20	.34	.01	.47	210.00
3530.0	10.4	3482.7	36.9	39.8	743.5	77.3	76.7	13.8	210.00
.20	.26	4.68	.48	.040	.013	.040	.000	196.80	911.01
.000079	50.	50.	50.	3	0	0	.00	163.99	1075.00

SPECIAL BRIDGE

3 XK	XKOR	COFQ	RDLEN	BWC	BWP	BAREA	SS	ELCHU	ELCHD
1.25	1.70	2.60	.00	36.83	.83	180.00	.00	198.00	196.80

SECNO 6500.000
RESSURE AND WEIR FLOW, Weir Submergence Based on TRAPEZOIDAL Shape

SECNO	DEPTH	CWSEL	CRIWS	WSELK	EG	HV	HL	OLOSS	L-BANK ELEV
Q	QLOB	QCH	QROB	ALOB	ACH	AROB	VOL	TWA	R-BANK ELEV
TIME	VLOB	VCH	VROB	XNL	XNCH	XNR	WTN	ELMIN	SSTA
SLOPE	XLOBL	XLCH	XLOBR	ITRIAL	IDC	ICONT	CORAR	TOPWID	ENDST

EGPRS	EGLWC	H3	QWEIR	QPR	BAREA	TRAPEZOID AREA	ELLC	ELTRD	WEIRLN
220.67	211.21	.02	1355.	2118.	180.	180.	203.00	210.70	74.

6500.000	16.27	214.27	.00	.00	214.52	.25	3.32	.00	210.50
3470.0	184.6	3094.7	190.7	239.9	733.5	229.8	88.5	15.8	210.00
.23	.77	4.22	.83	.040	.013	.040	.000	198.00	905.01
.000077	500.	500.	500.	2	0	3	.00	179.00	1084.00

```
*SECNO 6530.000

 02 WARNING:  CONVEYANCE CHANGE OUTSIDE OF ACCEPTABLE RANGE,  KRATIO =   .57

 6530.000     13.88    214.08      .00      .00    214.71      .64      .00      .19    211.50
   3470.0     272.7    2870.4    327.0    224.0     409.4    240.5     89.2     15.9    211.50
      .23      1.22      7.01     1.36     .040      .013     .040     .000   200.20    908.01
  .000234       30.       30.      30.        2         0        0      .00   172.00   1080.00


CCHV=     .100 CEHV=     .350
 SECNO 6714.000

3302 WARNING:  CONVEYANCE CHANGE OUTSIDE OF ACCEPTABLE RANGE,  KRATIO =   .61

 6714.000     14.06    214.36      .00      .00    214.80      .45      .07      .02    211.00
   3470.0     431.7    2471.1    567.2    229.0     397.2    268.8     93.2     16.7    211.00
      .24      1.89      6.22     2.11     .040      .025     .040     .000   200.30    898.01
  .000624      197.      197.     197.        2         0        0      .00   198.49   1096.50


*SECNO 7115.000
 7115.000     13.97    214.57      .00      .00    215.11      .54      .28      .03    213.00
   3330.0     306.6    2675.9    347.5    172.2     409.0    185.6    100.9     18.5    212.00
      .26      1.78      6.54     1.87     .040      .025     .040     .000   200.60    904.51
  .000767      401.      401.     401.        2         0        0      .00   195.50   1100.00


 SECNO 7515.000
 7515.000     13.94    214.84      .00      .00    215.46      .62      .32      .03    213.00
   3310.0     183.3    2769.9    356.8    123.5     405.1    171.8    107.6     20.3    213.00
      .28      1.48      6.84     2.08     .040      .025     .040     .000   200.90    902.52
  .000841      400.      400.     400.        0         0        0      .00   197.98   1100.50


 29NOV94      09:55:27                                                                    PAGE   19

   SECNO      DEPTH      CWSEL      CRIWS      WSELK      EG         HV         HL         OLOSS      L-BANK ELEV
   Q          QLOB       QCH        QROB       ALOB       ACH        AROB       VOL        TWA        R-BANK ELEV
   TIME       VLOB       VCH        VROB       XNL        XNCH       XNR        WTN        ELMIN      SSTA
   SLOPE      XLOBL      XLCH       XLOBR      ITRIAL     IDC        ICONT      CORAR      TOPWID     ENDST


 SECNO 7715.000

3265 DIVIDED FLOW

 7715.000     13.27    214.77      .00      .00    215.85     1.08      .23      .16    214.00
   3310.0      45.5    3044.9    219.6     44.0     350.7     98.6    110.4     21.3    214.00
      .29      1.03      8.68     2.23     .040      .025     .040     .000   201.50    900.01
  .001659      200.      200.     200.        2         0        0      .00   205.75   1123.00


 SECNO 7916.000

3301 HV CHANGED MORE THAN HVINS
```

3495 OVERBANK AREA ASSUMED NON-EFFECTIVE, ELLEA= 216.00 ELREA= 215.00

7916.000	12.49	214.59	.00	.00	216.66	2.08	.46	.35	216.00
3310.0	.0	3310.0	.0	.0	286.2	.0	112.2	21.8	215.00
.29	.00	11.56	.00	.000	.025	.000	.000	202.10	980.95
.003384	201.	201.	201.	2	0	0	.00	37.94	1018.89

SECNO 8317.000

3301 HV CHANGED MORE THAN HVINS

3495 OVERBANK AREA ASSUMED NON-EFFECTIVE, ELLEA= 219.00 ELREA= 217.00

8317.000	13.85	216.85	.00	.00	217.60	.76	.81	.13	219.00
2300.0	.0	2300.0	.0	.0	329.6	.0	115.0	22.2	217.00
.31	.00	6.98	.00	.000	.025	.000	.000	203.00	978.73
.001146	401.	401.	401.	3	0	0	.00	41.54	1020.27

*SECNO 8717.000

3495 OVERBANK AREA ASSUMED NON-EFFECTIVE, ELLEA= 221.00 ELREA= 221.00

8717.000	13.32	217.32	.00	.00	218.04	.72	.44	.00	221.00
2300.0	.0	2300.0	.0	.0	336.9	.0	118.1	22.6	221.00
.33	.00	6.83	.00	.000	.025	.000	.000	204.00	980.41
.001035	400.	400.	400.	2	0	0	.00	38.91	1019.32

1

SECNO	DEPTH	CWSEL	CRIWS	WSELK	EG	HV	HL	OLOSS	L-BANK ELEV
Q	QLOB	QCH	QROB	ALOB	ACH	AROB	VOL	TWA	R-BANK ELEV
TIME	VLOB	VCH	VROB	XNL	XNCH	XNR	WTN	ELMIN	SSTA
SLOPE	XLOBL	XLCH	XLOBR	ITRIAL	IDC	ICONT	CORAR	TOPWID	ENDST

*SECNO 8859.000

3495 OVERBANK AREA ASSUMED NON-EFFECTIVE, ELLEA= 221.00 ELREA= 222.00

8859.000	12.83	217.43	.00	.00	218.22	.80	.16	.03	221.00
2300.0	.0	2300.0	.0	.0	321.1	.0	119.1	22.7	222.00
.33	.00	7.16	.00	.000	.025	.000	.000	204.60	978.83
.001187	142.	142.	142.	2	0	0	.00	38.43	1017.26

CCHV= .300 CEHV= .500
SECNO 8977.000

3302 WARNING: CONVEYANCE CHANGE OUTSIDE OF ACCEPTABLE RANGE, KRATIO = .61

3495 OVERBANK AREA ASSUMED NON-EFFECTIVE, ELLEA= 222.00 ELREA= 222.00

```
 3977.000     11.51    217.41       .00       .00    218.68      1.27       .22       .24    222.00
    2300.0        .0    2300.0        .0        .0     254.1        .0     119.9      22.8    222.00
       .34       .00      9.05       .00      .000      .025      .000      .000    205.90    980.28
   .003187      118.      118.      118.         2         0         0       .00     37.44   1017.72


SPECIAL BRIDGE

 27 DOWNSTREAM ELEV IS     211.57 , NOT     217.41 HYDRAULIC JUMP OCCURS DOWNSTREAM (IF LOW FLOW CONTROLS)

SB  XK        XKOR      COFQ      RDLEN     BWC       BWP       BAREA     SS        ELCHU     ELCHD
    1.25      1.69      2.60       .00     17.00      3.83    105.36       .00    206.49    205.90

*SECNO 9037.000

 01 HV CHANGED MORE THAN HVINS


 02 WARNING:  CONVEYANCE CHANGE OUTSIDE OF ACCEPTABLE RANGE,  KRATIO =  4.51

PRESSURE AND WEIR FLOW,  Weir Submergence Based on TRAPEZOIDAL Shape

1
   29NOV94      09:55:27                                                                                                PAGE   21


   SECNO     DEPTH     CWSEL     CRIWS     WSELK     EG        HV        HL        OLOSS     L-BANK ELEV
   Q         QLOB      QCH       QROB      ALOB      ACH       AROB      VOL       TWA       R-BANK ELEV
   TIME      VLOB      VCH       VROB      XNL       XNCH      XNR       WTN       ELMIN     SSTA
   SLOPE     XLOBL     XLCH      XLOBR     ITRIAL    IDC       ICONT     CORAR     TOPWID    ENDST


 EGPRS      EGLWC      H3       QWEIR      QPR       BAREA   TRAPEZOID      ELLC      ELTRD     WEIRLN
                                                                AREA
   229.59    221.45       .00      592.     1682.      105.      105.      214.49    222.50      138.


 9037.000     17.35    223.84       .00       .00    224.10       .26      5.42       .00    222.60
    2270.0      39.6    2204.1      26.2      68.4     532.7      48.2     120.5      22.9    222.50
       .34       .58      4.14       .54      .040      .016      .040      .000    206.49    927.01
   .000152       60.       60.       60.         2         0         4       .00    137.99   1065.00


*SECNO 9118.000

 95 OVERBANK AREA ASSUMED NON-EFFECTIVE, ELLEA=       224.00 ELREA=       223.00

 9118.000     18.30    223.90       .00       .00    224.13       .22       .02       .01    224.00
    2270.0        .0    2174.6      95.4        .0     563.6      92.3     121.7      23.1    223.00
       .35       .00      3.86      1.03      .000      .028      .040      .000    205.60    973.19
   .000299       81.       81.       81.         2         0         0       .00    110.81   1084.00


CCHV=     .100 CEHV=     .350
 ECNO 9318.000

3302 WARNING:  CONVEYANCE CHANGE OUTSIDE OF ACCEPTABLE RANGE,  KRATIO =   .52
```

3495 OVERBANK AREA ASSUMED NON-EFFECTIVE, ELLEA= 225.00 ELREA= 225.00

9318.000	17.36	223.76	.00	.00	224.36	.61	.10	.13	225.00
2270.0	.0	2270.0	.0	.0	363.6	.0	124.1	23.5	225.00
.35	.00	6.24	.00	.000	.028	.000	.000	206.40	983.33
.001107	200.	200.	200.	2	0	0	.00	38.93	1022.26

ECNO 9518.000

3495 OVERBANK AREA ASSUMED NON-EFFECTIVE, ELLEA= 227.00 ELREA= 227.00

9518.000	16.96	224.16	.00	.00	224.57	.41	.19	.02	227.00
1700.0	.0	1700.0	.0	.0	330.5	.0	125.7	23.7	227.00
.37	.00	5.14	.00	.000	.028	.000	.000	207.20	981.09
.000776	200.	200.	200.	2	0	0	.00	36.90	1017.99

1

SECNO	DEPTH	CWSEL	CRIWS	WSELK	EG	HV	HL	OLOSS	L-BANK ELEV
Q	QLOB	QCH	QROB	ALOB	ACH	AROB	VOL	TWA	R-BANK ELEV
TIME	VLOB	VCH	VROB	XNL	XNCH	XNR	WTN	ELMIN	SSTA
SLOPE	XLOBL	XLCH	XLOBR	ITRIAL	IDC	ICONT	CORAR	TOPWID	ENDST

ECNO 9919.000

3495 OVERBANK AREA ASSUMED NON-EFFECTIVE, ELLEA= 228.00 ELREA= 230.00

9919.000	12.25	224.45	.00	.00	225.03	.58	.40	.06	228.00
1700.0	.0	1700.0	.0	.0	279.1	.0	128.5	24.0	230.00
.38	.00	6.09	.00	.000	.028	.000	.000	212.20	976.24
.001305	401.	401.	401.	2	0	0	.00	41.05	1017.28

*SECNO 10119.000

3301 HV CHANGED MORE THAN HVINS

385 20 TRIALS ATTEMPTED WSEL,CWSEL
3093 PROBABLE MINIMUM SPECIFIC ENERGY
3720 CRITICAL DEPTH ASSUMED

395 OVERBANK AREA ASSUMED NON-EFFECTIVE, ELLEA= 230.00 ELREA= 230.00

10119.000	9.36	224.36	224.36	.00	226.92	2.55	.55	.69	230.00
1700.0	.0	1700.0	.0	.0	132.6	.0	129.4	24.2	230.00
.39	.00	12.82	.00	.000	.028	.000	.000	215.00	985.91
.009199	200.	200.	200.	20	15	0	.00	26.52	1012.43

*SECNO 10319.000
385 20 TRIALS ATTEMPTED WSEL,CWSEL
393 PROBABLE MINIMUM SPECIFIC ENERGY
3720 CRITICAL DEPTH ASSUMED

95 OVERBANK AREA ASSUMED NON-EFFECTIVE, ELLEA= 232.00 ELREA= 232.80

10319.000	9.47	227.27	227.27	.00	229.63	2.35	1.81	.02	232.00
1700.0	.0	1700.0	.0	.0	138.1	.0	130.1	24.3	232.80
.39	.00	12.31	.00	.000	.028	.000	.000	217.80	984.54
.008879	200.	200.	200.	20	5	0	.00	29.55	1014.09

*SECNO 10720.000

01 HV CHANGED MORE THAN HVINS

1

29NOV94 09:55:27 PAGE 23

SECNO	DEPTH	CWSEL	CRIWS	WSELK	EG	HV	HL	OLOSS	L-BANK ELEV
Q	QLOB	QCH	QROB	ALOB	ACH	AROB	VOL	TWA	R-BANK ELEV
TIME	VLOB	VCH	VROB	XNL	XNCH	XNR	WTN	ELMIN	SSTA
SLOPE	XLOBL	XLCH	XLOBR	ITRIAL	IDC	ICONT	CORAR	TOPWID	ENDST

7185 MINIMUM SPECIFIC ENERGY
20 CRITICAL DEPTH ASSUMED

3495 OVERBANK AREA ASSUMED NON-EFFECTIVE, ELLEA= 237.10 ELREA= 236.00

0720.000	10.69	231.19	231.19	.00	234.20	3.01	4.05	.23	237.10
1700.0	.0	1700.0	.0	.0	122.1	.0	131.3	24.5	236.00
.40	.00	13.92	.00	.000	.028	.000	.000	220.50	991.84
.011597	401.	401.	401.	2	8	0	.00	20.44	1012.28

ECNO 11120.000

3301 HV CHANGED MORE THAN HVINS

3302 WARNING: CONVEYANCE CHANGE OUTSIDE OF ACCEPTABLE RANGE, KRATIO = 2.15

3495 OVERBANK AREA ASSUMED NON-EFFECTIVE, ELLEA= 241.00 ELREA= 240.00

1120.000	13.38	235.38	.00	.00	236.28	.90	1.87	.21	241.00
1700.0	.0	1700.0	.0	.0	223.4	.0	132.8	24.8	240.00
.41	.00	7.61	.00	.000	.028	.000	.000	222.00	985.43
.002512	400.	400.	400.	2	0	0	.00	33.33	1018.76

*SECNO 11408.000

3301 HV CHANGED MORE THAN HVINS

35 MINIMUM SPECIFIC ENERGY
20 CRITICAL DEPTH ASSUMED

95 OVERBANK AREA ASSUMED NON-EFFECTIVE, ELLEA= 241.00 ELREA= 241.00

11408.000	9.42	235.42	235.42	.00	238.27	2.85	1.28	.68	241.00
1700.0	.0	1700.0	.0	.0	125.4	.0	134.0	25.0	241.00

.42	.00	13.55	.00	.000	.028	.000	.000	226.00	989.29
.009794	288.	288.	288.	4	19	0	.00	22.29	1011.58

1

SECNO	DEPTH	CWSEL	CRIWS	WSELK	EG	HV	HL	OLOSS	L-BANK ELEV
Q	QLOB	QCH	QROB	ALOB	ACH	AROB	VOL	TWA	R-BANK ELEV
TIME	VLOB	VCH	VROB	XNL	XNCH	XNR	WTN	ELMIN	SSTA
SLOPE	XLOBL	XLCH	XLOBR	ITRIAL	IDC	ICONT	CORAR	TOPWID	ENDST

CCHV= .100 CEHV= .350

*SECNO 11558.000

3301 HV CHANGED MORE THAN HVINS

95 OVERBANK AREA ASSUMED NON-EFFECTIVE, ELLEA= 243.00 ELREA= 243.00

11558.000	8.43	237.65	.00	.00	239.54	1.89	1.18	.10	243.00
1700.0	.0	1700.0	.0	.0	154.1	.0	134.5	25.0	243.00
.42	.00	11.03	.00	.000	.028	.000	.000	229.22	993.00
.006416	149.	150.	151.	3	0	0	.00	20.00	1013.00

ECIAL BRIDGE

5227 DOWNSTREAM ELEV IS 233.41 , NOT 237.65 HYDRAULIC JUMP OCCURS DOWNSTREAM (IF LOW FLOW CONTROLS)

XK	XKOR	COFQ	RDLEN	BWC	BWP	BAREA	SS	ELCHU	ELCHD
1.25	1.69	2.60	.00	18.17	5.00	105.36	.00	229.70	229.22

ECNO 11690.000

3265 DIVIDED FLOW

3301 HV CHANGED MORE THAN HVINS

02 WARNING: CONVEYANCE CHANGE OUTSIDE OF ACCEPTABLE RANGE, KRATIO = 3.92

ESSURE AND WEIR FLOW, Weir Submergence Based on TRAPEZOIDAL Shape

GPRS	EGLWC	H3	QWEIR	QPR	BAREA	TRAPEZOID AREA	ELLC	ELTRD	WEIRLN
244.01	242.32	.00	15.	1613.	105.	105.	237.70	243.10	26.

1690.000	13.65	243.35	.00	.00	243.81	.45	4.26	.00	243.60
1640.0	.0	1639.8	.2	.0	304.1	1.2	135.2	25.1	243.80
.43	.00	5.39	.17	.000	.016	.040	.000	229.70	976.68
.000389	129.	132.	136.	2	0	3	.00	48.91	1074.64

```
         10450.  C        .        .        .        .        .     E . L    R .        .        .        .
         10500.  C        .        .        .        .        .    IE . L    R .        .        .        .
         10550.  C        .        .        .        .        .    IE . L     R .       .        .        .
         10600.  C        .        .        .        .        .     IE. L     R .       .        .        .
         10650.  C        .        .        .        .        .     IE.  L     R.       .        .        .
         10700.  C        .        .        .        .        .      WE  L      R       .        .        .
 0720.00 10750.  C        .        .        .        .        .      IE  L      R       .        .        .
         10800.  C        .        .        .        .        .       E   LM    R       .        .        .
         10850.  C        .        .        .        .        .       IE  L  M R.       .        .        .
         10900.  C        .        .        .        .        .       .E   L   R.       .        .        .
         10950.  C        .        .        .        .        .       .IE   L  R. M     .        .        .
         11000.  C        .        .        .        .        .       .IE   L R .   M   .        .        .
         11050.  C        .        .        .        .        .       . IE   LR .     M .        .        .
         11100.  C        .        .        .        .        .       . IE   RL .       M .      .        .
11120.00 11150.  C        .        .        .        .        .       .  E   RL .         M      .        .
         11200.  C        .        .        .        .        .       .  IE  R L.         M      .        .
         11250.  C        .        .        .        .        .       .   E   R L         M      .        .
         11300.  C        .        .        .        .        .       .   IE  R L         .M     .        .
         11350.  C        .        .        .        .        .       .   IE   R.L        .M     .        .
         11400.  C        .        .        .        .        .       .    IE   R L       .M     .        .
 1408.00 11450.  C        .        .        .        .        .       .    IE   R L       .M     .        .
         11500.  C        .        .        .        .        .       .     E   R L       . M    .        .
         11550.  C        .        .        .        .        .       .     IE  R L       .  M   .        .
 1558.00 11600.  C        .        .        .        .        .       .      E  .L        .  M   .        .
         11650.  C        .        .        .        .        .       .      IE . L  R    M       .        .
         11700.  C        .        .        .        .        .       .      IE .   L  M R.       .        .
 1690.00 11750.  C        .        .        .        .        .       .       E .    L    .R     .        .
```


THIS RUN EXECUTED 29NOV94 09:55:34

```
**********************************
HEC-2 WATER SURFACE PROFILES

Version   4.6.2;  May 1991
**********************************
```

NOTE- ASTERISK (*) AT LEFT OF CROSS-SECTION NUMBER INDICATES MESSAGE IN SUMMARY OF ERRORS LIST

SUB-CRITICAL FLOW M4-2FT

SUMMARY PRINTOUT

	SECNO	Q	XLCH	TOPWID	AREA	VCH	XLBEL	RBEL	CWSEL	ELMIN	EG
*	.000	4710.00	.00	16.00	221.91	21.23	100000.00	100000.00	183.70	169.67	190.70
	.000	5470.00	.00	16.00	250.06	21.87	100000.00	100000.00	185.46	169.67	192.89
	384.000	4710.00	384.00	16.02	219.01	21.51	186.71	186.71	185.56	171.71	192.74
*	384.000	5470.00	384.00	116.00	894.91	10.51	186.71	186.71	192.38	171.71	193.53
	434.000	4710.00	50.00	16.02	222.51	21.17	188.36	188.36	186.04	171.98	193.00
*	434.000	5470.00	50.00	116.00	588.80	14.64	188.36	188.36	191.20	171.98	193.95

	484.000	4710.00	50.00	16.02	221.88	21.23	190.00	190.00	186.83	172.80	193.82
*	484.000	5470.00	50.00	116.00	557.36	14.92	190.00	190.00	192.45	172.80	195.42
	684.000	4710.00	200.00	126.00	1010.31	7.44	190.00	190.00	195.19	176.07	195.87
*	684.000	5470.00	200.00	126.00	1023.76	8.55	190.00	190.00	195.30	176.07	196.19
	726.000	4710.00	42.00	126.00	918.62	8.72	177.11	177.11	195.03	177.11	196.05
	726.000	5470.00	42.00	126.00	924.73	10.08	177.11	177.11	195.07	177.11	196.44
	1000.000	4710.00	274.00	104.00	623.04	10.84	179.85	179.85	195.20	179.85	196.88
	1000.000	5470.00	274.00	104.00	799.78	10.85	179.85	179.85	196.90	179.85	198.51
*	1110.000	4710.00	110.00	84.91	574.09	8.64	195.00	195.00	195.99	181.00	197.13
	1110.000	1170.00	110.00	84.95	392.93	3.56	200.00	195.00	198.82	193.81	198.98
	1514.000	4710.00	404.00	53.11	572.83	8.22	198.60	198.60	197.56	181.10	198.61
	1514.000	1170.00	404.00	83.00	238.67	5.48	208.60	198.60	198.99	194.78	199.42
	1912.000	4490.00	398.00	51.63	613.70	7.32	203.00	202.70	198.98	181.70	199.81
	1912.000	950.00	398.00	57.08	116.61	8.15	203.00	207.62	200.59	197.74	201.62
	2312.000	4490.00	400.00	50.33	565.51	7.94	204.00	203.00	200.02	183.00	200.99
*	2312.000	950.00	400.00	93.50	243.18	3.91	204.31	210.70	202.47	198.70	202.71

1

	SECNO	Q	XLCH	TOPWID	AREA	VCH	XLBEL	RBEL	CWSEL	ELMIN	EG
	2485.000	4490.00	173.00	41.02	299.25	15.00	203.00	203.00	200.00	183.90	203.50
	2485.000	950.00	173.00	101.78	264.13	3.60	203.63	208.86	202.72	199.11	202.92
	2515.000	4490.00	30.00	42.48	319.82	14.04	203.00	203.00	200.83	184.00	203.89
	2515.000	950.00	30.00	95.60	247.79	3.83	203.39	208.57	202.74	199.19	202.96
	2530.000	4490.00	15.00	57.09	329.36	13.63	203.00	203.00	201.40	188.30	204.29
	2530.000	950.00	15.00	91.16	230.08	4.13	203.15	210.47	202.74	199.22	203.00
*	2712.000	4410.00	182.00	81.09	522.00	8.94	204.00	203.00	203.91	188.50	205.14
	2712.000	880.00	182.00	97.18	256.53	3.43	204.05	207.54	203.06	199.66	203.24
	3112.000	4410.00	400.00	81.76	488.20	9.47	205.40	204.00	204.41	189.40	205.78
	3112.000	880.00	400.00	147.50	252.03	3.78	203.52	211.62	203.75	200.62	203.95
	3513.000	4350.00	401.00	113.67	477.76	10.07	205.00	205.00	205.01	190.80	206.55
	3513.000	810.00	401.00	122.89	285.36	2.93	204.88	205.11	204.97	201.58	205.10
	3913.000	4350.00	400.00	45.06	395.42	11.00	205.80	206.00	205.66	191.30	207.54
	3913.000	810.00	400.00	183.98	401.34	2.13	204.74	211.42	205.61	202.40	205.68
*	4313.000	4350.00	400.00	189.00	856.56	7.68	205.00	207.00	207.56	192.60	208.27
	4313.000	810.00	400.00	188.99	437.48	1.67	213.50	204.85	206.04	203.50	206.10
	4713.000	3850.00	400.00	169.98	779.34	7.11	206.60	206.00	208.02	192.80	208.66
*	4713.000	740.00	400.00	169.97	332.40	1.92	212.59	204.76	206.51	204.46	206.60
	5113.000	3540.00	400.00	181.48	693.96	7.27	207.20	207.00	208.37	194.50	209.07
*	5113.000	130.00	400.00	181.47	242.75	.45	214.92	206.06	206.97	205.42	206.97

	5513.000	3530.00	400.00	172.99	515.56	9.20	207.00	207.00	208.55	195.60	209.76
*	5513.000	120.00	400.00	129.44	78.88	1.52	207.51	215.26	207.11	206.38	207.15
	5914.000	3530.00	401.00	153.77	447.17	9.30	208.00	208.00	209.17	196.60	210.47
	5914.000	120.00	401.00	116.02	90.93	1.32	208.73	216.77	208.31	207.34	208.34
	5950.000	3530.00	36.00	100.59	370.14	11.23	209.00	200.00	208.81	196.80	210.72
	5950.000	120.00	36.00	117.82	313.74	.38	209.00	216.77	208.34	200.00	208.35
	6000.000	3530.00	50.00	163.99	860.53	4.68	210.00	210.00	210.86	196.80	211.20
	6000.000	120.00	50.00	90.96	86.59	1.39	210.00	213.97	208.34	207.34	208.37
	6500.000	3470.00	500.00	179.00	1203.08	4.22	210.50	210.00	214.27	198.00	214.52
	6500.000	120.00	500.00	91.01	87.15	1.38	210.06	216.22	208.34	207.34	208.37
*	6530.000	3470.00	30.00	172.00	873.93	7.01	211.50	211.50	214.08	200.20	214.71
	6530.000	120.00	30.00	91.41	91.73	1.31	210.85	215.22	208.39	207.34	208.42
*	6714.000	3470.00	197.00	198.49	894.97	6.22	211.00	211.00	214.36	200.30	214.80
	6714.000	120.00	197.00	65.90	46.43	2.58	211.00	210.91	208.97	208.24	209.07

1

	SECNO	Q	XLCH	TOPWID	AREA	VCH	XLBEL	RBEL	CWSEL	ELMIN	EG
	7115.000	3330.00	401.00	195.50	766.83	6.54	213.00	212.00	214.57	200.60	215.11
	7115.000	20.00	401.00	67.04	55.93	.36	212.00	212.47	210.05	209.18	210.06
	7515.000	3310.00	400.00	197.98	700.51	6.84	213.00	213.00	214.84	200.90	215.46
*	7515.000	20.00	400.00	61.20	9.09	2.20	213.13	213.14	210.27	210.12	210.35
	7715.000	3310.00	200.00	205.75	493.34	8.68	214.00	214.00	214.77	201.50	215.85
	7715.000	20.00	200.00	63.36	25.88	.77	214.31	214.18	211.38	210.97	211.39
	7916.000	3310.00	201.00	37.94	286.22	11.56	216.00	215.00	214.59	202.10	216.66
	7916.000	20.00	201.00	61.86	14.19	1.41	215.55	215.23	212.14	211.91	212.17
	8317.000	2300.00	401.00	41.54	329.61	6.98	219.00	217.00	216.85	203.00	217.60
	8317.000	100.00	401.00	66.31	49.83	2.01	217.98	217.65	214.58	213.79	214.64
	8717.000	2300.00	400.00	38.91	336.93	6.83	221.00	221.00	217.32	204.00	218.04
	8717.000	100.00	400.00	66.77	53.62	1.87	220.19	229.10	216.51	215.66	216.57
	8859.000	2300.00	142.00	38.43	321.11	7.16	221.00	222.00	217.43	204.60	218.22
	8859.000	100.00	142.00	66.54	51.75	1.93	221.12	222.10	217.15	216.33	217.21
*	8977.000	2300.00	118.00	37.44	254.08	9.05	222.00	222.00	217.41	205.90	218.68
	8977.000	100.00	118.00	66.64	52.53	1.90	221.86	231.63	217.71	216.88	217.77
*	9037.000	2270.00	60.00	137.99	649.39	4.14	222.60	222.50	223.84	206.49	224.10
*	9037.000	100.00	60.00	63.60	27.84	3.59	228.29	225.54	217.61	217.16	217.81
	9118.000	2270.00	81.00	110.81	655.92	3.86	224.00	223.00	223.90	205.60	224.13
*	9118.000	100.00	81.00	67.27	57.83	1.73	228.10	231.23	218.45	217.54	218.50
	9318.000	2270.00	200.00	38.93	363.58	6.24	225.00	225.00	223.76	206.40	224.36
	9318.000	100.00	200.00	66.36	50.22	1.99	229.10	231.73	219.27	218.48	219.34

	9518.000	1700.00	200.00	36.90	330.54	5.14	227.00	227.00	224.16	207.20	224.57
	9518.000	100.00	200.00	73.45	55.10	1.81	229.55	232.90	220.26	219.41	220.31
	9919.000	1700.00	401.00	41.05	279.08	6.09	228.00	230.00	224.45	212.20	225.03
	9919.000	100.00	401.00	65.51	43.23	2.31	230.93	234.86	222.65	221.96	222.73
*	10119.000	1700.00	200.00	26.52	132.61	12.82	230.00	230.00	224.36	215.00	226.92
	10119.000	100.00	200.00	65.47	42.89	2.33	232.45	235.33	224.38	223.70	224.47
*	10319.000	1700.00	200.00	29.55	138.12	12.31	232.00	232.80	227.27	217.80	229.63
	10319.000	100.00	200.00	65.52	43.31	2.31	230.99	235.37	226.12	225.43	226.20
*	10720.000	1700.00	401.00	20.44	122.11	13.92	237.10	236.00	231.19	220.50	234.20
	10720.000	100.00	401.00	65.46	42.84	2.33	232.72	239.73	229.59	228.91	229.68
*	11120.000	1700.00	400.00	33.33	223.43	7.61	241.00	240.00	235.38	222.00	236.28
	11120.000	100.00	400.00	65.52	43.32	2.31	237.99	236.62	233.06	232.37	233.14

1

	SECNO	Q	XLCH	TOPWID	AREA	VCH	XLBEL	RBEL	CWSEL	ELMIN	EG
*	11408.000	1700.00	288.00	22.29	125.44	13.55	241.00	241.00	235.42	226.00	238.27
	11408.000	100.00	288.00	65.47	42.87	2.33	242.03	239.58	235.55	234.87	235.64
	11558.000	1700.00	150.00	20.00	154.12	11.03	243.00	243.00	237.65	229.22	239.54
	11558.000	100.00	150.00	65.51	43.21	2.31	240.79	240.30	236.86	236.17	236.94
*	11690.000	1640.00	132.00	48.91	305.31	5.39	243.60	243.80	243.35	229.70	243.81
*	11690.000	100.00	132.00	63.60	27.84	3.59	244.18	250.69	237.76	237.31	237.96

1

SUMMARY OF ERRORS AND SPECIAL NOTES

CAUTION SECNO= .000 PROFILE= 1 CRITICAL DEPTH ASSUMED

CAUTION SECNO= 384.000 PROFILE= 1 CRITICAL DEPTH ASSUMED
CAUTION SECNO= 384.000 PROFILE= 1 MINIMUM SPECIFIC ENERGY
WARNING SECNO= 384.000 PROFILE= 2 CONVEYANCE CHANGE OUTSIDE ACCEPTABLE RANGE

CAUTION SECNO= 434.000 PROFILE= 1 CRITICAL DEPTH ASSUMED
CAUTION SECNO= 434.000 PROFILE= 1 MINIMUM SPECIFIC ENERGY
CAUTION SECNO= 434.000 PROFILE= 2 CRITICAL DEPTH ASSUMED
CAUTION SECNO= 434.000 PROFILE= 2 PROBABLE MINIMUM SPECIFIC ENERGY
CAUTION SECNO= 434.000 PROFILE= 2 20 TRIALS ATTEMPTED TO BALANCE WSEL

CAUTION SECNO= 484.000 PROFILE= 1 CRITICAL DEPTH ASSUMED
CAUTION SECNO= 484.000 PROFILE= 1 PROBABLE MINIMUM SPECIFIC ENERGY
CAUTION SECNO= 484.000 PROFILE= 1 20 TRIALS ATTEMPTED TO BALANCE WSEL
CAUTION SECNO= 484.000 PROFILE= 2 CRITICAL DEPTH ASSUMED
CAUTION SECNO= 484.000 PROFILE= 2 PROBABLE MINIMUM SPECIFIC ENERGY
CAUTION SECNO= 484.000 PROFILE= 2 20 TRIALS ATTEMPTED TO BALANCE WSEL

FINAL EXISTING HEC-2

```
*********************************************
*  HEC-2 WATER SURFACE PROFILES             *
*                                           *
   Version   4.6.2;  May 1991               *
                                            *
*  RUN DATE    14DEC93    TIME    17:16:25  *
*********************************************
```

```
*****************************************
*  U.S. ARMY CORPS OF ENGINEERS         *
*  HYDROLOGIC ENGINEERING CENTER        *
*  609 SECOND STREET, SUITE D           *
*  DAVIS, CALIFORNIA 95616-4687         *
*          (916) 756-1104               *
*****************************************
```

```
X     X  XXXXXXX   XXXXX              XXXXX
X     X  X        X     X            X     X
X     X  X        X                        X
XXXXXXX  XXXX     X          XXXXX    XXXXX
X     X  X        X                  X
X     X  X        X     X            X
X     X  XXXXXXX   XXXXX             XXXXXXX
```

14DEC93 17:16:25 PAGE 1

THIS RUN EXECUTED 14DEC93 17:16:25

```
*************************************
HEC-2 WATER SURFACE PROFILES

Version   4.6.2;  May 1991
*************************************
```

```
T1      FERGUSON    GREINER, INC 10-06-93     (FILENAME = M4-2FT-B.DAT)
T2      ORIGINAL McDowell BC (1-10X10 & 1-14X10)  with original dirt channel
T3      SUB-CRITICAL FLOW M4-2FT-B                    u/s of McDowell Road

  Cross-section numbering has been changed:
        d/s face of the McDowell Rd. culverts ===> XS  #726.00
        u/s      "       "       "            ===> XS #1000.00
        The XS numbering u/s of McDowell Rd. has been modified accordingly.
        These XS #'s apply to the all other HEC-2 runs

J1  ICHECK    INQ      NINV     IDIR     STRT     METRIC   HVINS    Q        WSEL     FQ

              2                         .00532                                180

J2  NPROF     IPLOT    PRFVS    XSECV    XSECH    FN       ALLDC    IBW      CHNIM    ITRACE

     1        0        0        0        0        0        0        6        0

J3  VARIABLE CODES FOR SUMMARY PRINTOUT

    38       43       39        4       25       26       23       24        1       42

J1      9     4710     5470     5470     5470     5470     5470     5470     5470     5470
  Refer to the Comments after XS #766 about the discharges.
NC    .035     .035     .015
J1      0        7   999.99  1016.01
J3     10                     1000                1016
GR  184.67   950.00   184.67   999.99   170.00  1000.00   169.67  1008.00   170.00  1016.00
GR  184.67  1016.01   184.67  1066.00
```

```
X1      384         7     999.99    1016.01       374       394       384
X3       10
GR   186.71    950.00    186.71     999.99    172.04   1000.00    171.71   1008.00    172.04   1016.00
GR   186.71   1016.01    186.71    1066.00

X1      434         7     999.99    1016.01        49        51        50
X3       10
GR   188.36    950.00    188.36     999.99    172.31   1000.00    171.98   1008.00    172.31   1016.00
GR   188.36   1016.01    188.36    1066.00
```



```
X1      484         7     999.99    1016.01        49        51        50
X3       10
GR   190.00    950.00    190.00     999.99    173.13   1000.00    172.80   1008.00    173.13   1016.00
GR   190.00   1016.01    190.00    1066.00

NC                                      .3        .5
X1      684         7     999.99    1026.01       200       200       200
GR   190.00    950.00    190.00     999.99    176.50   1000.00    176.07   1013.00    176.50   1026.00
GR   190.00   1026.01    190.00    1076.00

X1      726         7       1000       1026        42        42        42
X3       10                                                            189       189
GR   192.00    950.00    189.00     999.99    177.11   1000.00    177.11   1013.00    177.11   1026.00
GR   189.00   1026.01    192.00    1076.00
  The discharges d/s of McDowell Road are 500, 750, 1000 cfs less than the u/s
     discharges for 25, 50, 100-yr event, respectively.  This is due to the
     assumption that those amount of discharges do not join the d/s channel
     flowing west along the McDowell Road.

SC    2.014        .2       2.6                 10        12       274       9.2    179.85    177.11
X1     1000        10       987      1013       274       274       274
X2                            2    189.85
X3       10                                                            194       194
X5        2    195.20
BT       -7       966    193.00                972    193.00                975    194.00
BT                985    194.00               1027    194.00               1041    193.90
BT               1070    193.90
GR      193       966       193       972       194   984.99    193.87       985    179.85       987
GR   179.85      1013    193.87      1027       194  1027.01     193.9      1041     193.9      1070

NC    0.040     0.040     0.045         0         0
QT        9      4710      1170       200       300       400       500       600       700       800
X1     1110      14.0    973.10    1024.0     111.0     108.0     110.0       0.0       0.0         0
CI   998.55    193.81     0.025         0         0         0     -51.0
X3       10
GR    205.0     973.0     195.0    973.10     190.0     980.0     185.0     984.5     181.0     989.0
GR    181.0    1000.0     181.0    1006.0     185.0    1013.0     190.0    1018.5     195.0    1024.0
GR    195.5    1030.0     195.0    1036.0     194.0    1058.0     204.0   1058.01

NC        0         0         0       0.1      0.35
X1     1514      14.0    974.01    1030.0     418.0     390.0     404.0       0.0       0.0         0
CI      994    194.78     0.025         0         0         0     -52.0
X3       10
GR    208.6     974.0     198.6    974.01     195.0     977.0     185.0     988.0     181.1     992.0
GR    181.1    1010.0     185.0    1014.0     195.0    1023.0     198.6    1030.0     198.0    1034.5
GR    197.0    1046.0     197.0    1053.0     197.0    1057.0     207.0    1057.0

QT        9      4490       950       200       300       400       500       600       700       800
X1     1912      17.0    972.4    1034.0     408.0     388.0     398.0       0.0       0.0         0
CI     1010    197.74     0.025         4         4         0     -29.0
X3       10
```

_R	210.5	912.0	205.0	912.01	200.5	912.02	203.0	926.0	203.6	948.0
GR	203.0	972.4	200.0	975.5	185.0	989.0	181.7	994.0	181.7	1011.0

R	185.0	1015.0	200.0	1029.0	202.7	1034.0	202.0	1044.0	201.0	1055.0
R	200.0	1064.0	210.0	1064.0						
X1	2312	26.0	969.0	1028.0	410.0	390.0	400.0	0.0	0.0	0
I	1000	198.70	0.025	4	4	0	-44.0			
3	10									
GR	213.5	900.5	207.5	900.51	205.5	900.52	203.5	900.53	204.9	925.2
^R	204.2	961.5	204.0	969.0	203.0	971.8	200.0	974.2	195.0	979.5
R	190.0	983.8	185.0	987.5	184.0	988.5	183.0	989.5	183.2	1000.0
_R	185.0	1009.5	190.0	1014.5	195.0	1019.5	200.0	1024.5	203.0	1028.0
GR	203.9	1036.0	203.0	1047.0	202.0	1054.0	201.0	1063.0	200.9	1070.0
^R	210.9	1070.01								
NC	0	0	0	0.3	0.5					
X1	2485	23.0	969.7	1027.5	173.0	173.0	173.0	0.0	0.0	0
I	997	199.11	0.025	4	4	0	-56.0			
3	10									
GR	213.8	904.5	203.8	904.51	204.0	922.5	204.1	929.4	204.1	937.0
GR	203.0	969.7	200.0	977.5	199.0	980.5	198.0	984.0	197.6	990.0
R	197.6	991.0	183.9	991.0	183.9	1007.0	197.6	1007.0	197.6	1008.0
R	198.0	1013.0	199.0	1016.0	200.0	1018.5	203.0	1027.5	203.0	1035.0
GR	203.0	1043.0	201.6	1064.0	211.6	1064.01				
C	0	0	0.016	0	0					
..1	2515	20	963	1026	30	30	30	0	0	0
CI	995	199.19	0.025	4	4	0	-53.0			
^R	213.90	901	203.90	901.01	204.00	926	204.00	934	203.00	963
R	202.00	972	200.00	979	199.00	982	197.60	990	197.60	991
GR	184.00	991	184.00	1007	197.60	1007	199.00	1014	201.00	1019
GR	203.00	1026	203.00	1042	202.00	1053	201.50	1059	211.50	1059.01
1	2530	16.0	959.8	1025.0	15.0	15.0	15.0	0.0	0.0	0.0
CI	990	199.22	0.025	4	4	0	-48.0			
GR	213.9	901.0	203.9	901.01	203.0	959.8	197.6	980.0	197.6	991.5
R	188.3	991.5	188.3	1007.5	197.6	1007.5	197.6	1018.0	200.0	1021.0
R	203.0	1025.0	203.2	1036.0	203.0	1042.0	202.0	1050.0	201.5	1059.0
GR	211.5	1059.01								
C	0	0	0.025	0	0					
^T	9	4410	880	200	300	400	500	600	700	800
X1	2712	18.0	975.8	1022.0	182.0	182.0	182.0	0.0	0.0	0
I	996	199.66	0.025	4	4	0	-59.0			
3	10									
GR	214	899	203.7	899.01	204.2	970.0	204.0	975.8	200.0	980.8
GR	195.0	985.0	190.0	990.0	188.5	991.0	188.5	1007.0	190.0	1009.5
R	195.0	1014.8	200.0	1019.5	203.0	1022.0	203.6	1036	203.0	1047.0
R	202.0	1051.0	201.5	1057.0	211.5	1057.01				
NC	0	0	0	0.1	0.35					
1	3112	22.0	971.0	1021.0	400.0	400.0	400.0	0.0	0.0	0
_I	994	200.62	0.045	4	4	0	-44.0			
X3	10									
^R	214.0	893.5	204.0	893.51	203.0	900.8	203.6	908.0	203.0	917.0
R	202.0	951.0	205.0	969.5	205.4	971.0	205.0	973.0	200.0	980.0

GR	195.0	984.7	190.0	988.8	189.4	1000.0	190.0	1006.8	195.0	1011.5
GR	200.0	1016.5	204.0	1021.0	204.5	1034.0	204.0	1045.0	203.0	1048.0

```
GR    202.4    1060.0     212    1060.01

QT      9      4350      810      200      300      400      500      600      700      800
X1   3513      22.0    976.8   1020.8    401.0    401.0    401.0      0.0      0.0        0
CI    993    201.58    0.045        4        4        0    -67.0
X3     10
GR   214.0     896.0    204.0    896.01    205.0    923.0    205.1    933.5    205.0    942.0
GR   204.8     949.0    205.5     955.0    206.2    966.0    205.0    976.8    200.0    981.8
GR   195.0     986.8    191.0     990.8    190.8   1000.0    191.0   1007.0    195.0   1011.1
GR   200.0    1015.8    205.0    1020.8    205.2   1035.0    205.0   1047.0    204.0   1051.0
GR   203.4    1080.0    213.4   1080.01

X1   3913      19.0    976.0    1022.0    400.0    400.0    400.0      0.0      0.0        0
CI   1003    202.54    0.045        4        4        0    -87.0
X3     10
GR   215.1     898.0    210.1    898.01    205.1   898.02    204.6    942.0    205.0    967.0
GR   205.8     976.0    205.0     978.5    200.0    984.1    195.0    989.2    192.0    992.5
GR   191.3    1000.0    192.0    1006.5    195.0   1009.5    200.0   1015.0    205.0   1020.5
GR   206.0    1022.0    206.7    1028.5    202.4   1082.0    212.4  1082.01

X1   4313      28.0    979.5    1022.0    400.0    400.0    400.0      0.0      0.0        0
CI    989    203.50    0.045        4        0        0   -100.0
X3     10
GR   215.1     899.0    205.1    899.01    205.0    930.5    205.1    937.0    205.0    944.0
GR   204.4     959.0    205.0     971.0    205.1    977.0    205.0    979.5    200.0    985.0
GR   195.0     990.0    193.0     999.0    192.6   1000.0    193.0   1004.0    194.0   1008.0
GR   195.0    1009.0    200.0    1014.5    205.0   1018.5    206.0   1020.0    207.0   1022.0
GR   207.3    1025.0    207.0    1028.5    206.0   1038.0    205.0   1043.0    204.0   1052.0
GR   203.0    1058.0    202.3    1088.0    212.3  1088.01

QT      9      3850      740      200      300      400      500      600      700      800
X1   4713      24.0    976.0    1020.5    400.0    400.0    400.0      0.0      0.0        0
CI    995    204.46    0.045        4        0        0    -95.0
X3     10
GR   215.9     915.0    213.9    915.01    210.9   915.02    205.9   915.03    206.0    972.0
GR   206.6     976.0    206.0     979.5    205.0    981.0    200.0    986.0    195.0    990.3
GR   193.0     992.0    192.8     995.0    193.0    998.5    194.0   1006.0    195.0   1007.5
GR   200.0    1013.5    205.0    1018.5    206.0   1020.5    206.5   1027.0    206.0   1034.8
GR   205.0    1040.5    204.0    1054.0    203.2   1085.0    213.2  1085.01

QT      9      3540      130      200      300      400      500      600      700      800
X1   5113      23.0    977.0    1022.0    400.0    400.0    400.0      0.0      0.0        0
CI    998    205.42    0.045        4        0        0    -93.0
X3     10
GR   216.9     913.5    211.9    913.51    208.9   913.52    206.9   913.53    207.0    976.0
GR   207.2     977.0    207.0     978.0    206.0    980.0    205.0    981.5    200.0    987.5
GR   195.0     992.5    194.5    1000.0    195.0   1008.5    200.0   1013.0    205.0   1018.5
GR   206.0    1019.5    207.0    1022.0    207.1   1026.5    207.0   1031.0    206.0   1048.0
GR   205.0    1069.0    204.5    1095.0    214.5   1095.0
```



```
QT      9      3530      120      200      300      400      500      600      700      800
X1   5513      17.0    980.5    1018.5    400.0    400.0    400.0      0.0      0.0        0
CI   1004    206.38    0.045        4        4        0    -91.0
X3     10
GR   217.9     912.0    207.9    912.01    207.7    944.0    207.0    980.5    206.0    982.0
GR   205.0     982.5    200.0     987.0    196.0    991.0    195.6   1000.0    196.0   1007.0
GR   200.0    1010.5    205.0    1015.5    207.0   1018.5    207.8   1028.5    207.0   1054.0
GR   206.6    1085.0    216.6   1085.01

X1   5914      24.0    977.5    1020.0    401.0    401.0    401.0      0.0      0.0        0
CI   1007    207.34    0.045        4        4        0    -83.0
X3     10
```

R	219.3	916.0	209.3	916.01	209.0	953.5	208.0	977.5	207.0	979.0
GR	206.0	980.5	205.0	982.0	200.0	988.0	199.0	990.0	198.0	991.0
CR	197.0	993.5	196.6	997.0	197.0	1000.0	197.1	1001.0	197.0	1002.0
R	196.6	1007.0	197.0	1009.0	200.0	1011.5	205.0	1015.5	208.0	1020.0
GR	208.6	1047.0	208.0	1076.0	207.8	1086.2	217.8	1086.21		
1	6156	21	978	1024	242	242	242	0	0	0
I	1004	207.92	0.045	4	4	0	-72.0			
X3	10									
GR	220.0	911	210.1	911.01	210.4	940	210.0	955	209.6	964
R	210.1	964	210.0	978	205.0	983	200.0	988	198.0	991
R	197.8	992	197.8	1005	198.0	1007	200.0	1009	205.0	1014
GR	209.0	1018	209.8	1024	209.6	1044	209.0	1058	208.5	1075
GR	218.0	1075.01								
C	0	0	0	0.3	0.5					
X1	6307	17	989.25	1012	151	151	151	0	0	0
CI	1000	208.29	0.045	4	4	0	-35.0			
3	10									
GR	220.0	908	210.1	908.01	210.5	937	210.1	969	210.5	970
GR	210.0	987	209.75	989.25	198.75	989.25	198.75	999.25	199.75	1000.75
R	199.75	1010.75	209.75	1010.75	210.1	1012	210.5	1028	210.1	1029
R	210.0	1063	220.0	1063.01						
NC	0	0	0.016	0	0					
T	9	3470	60	200	300	400	500	600	700	800
B	1.25	1.58	2.60	0	20.5	1.5	190	0.01	199.51	198.75
X1	6388	13	989.25	1010.75	81	81	81	0	0	0
CI	-1	207.48	0.045	0	0	0	-60.0			
2	0	0	1	209.61	210.61	0	0	0	0	0
T	5	968	210.61	209.61	989.25	210.61	209.61	989.25	211.22	209.61
BT	1010.8	211.22	209.61	1025	210.61	209.61				
CR	220.0	901	210.3	901.01	210.1	967	210.5	968	210.61	989.25
R	199.61	989.25	199.61	999.25	200.61	1000.75	200.61	1010.75	210.61	1010.75
GR	210.1	1025	210.0	1070	220.0	1070.01				

Thomas RD

1

14DEC93 17:16:25 PAGE 6

C	0	0	0.025	0	0					
T	9	3470	60	200	300	400	500	600	700	800
X1	6517	16	977.0	1023	129.0	129.0	129.0	0	0	0
CI	-1	207.78	0.045	0	0	0	-60.0			
3	10									
GR	220	908	210.5	908.01	210.7	931.0	211.0	973.0	211.3	977.0
GR	211	980	210.0	981	205.0	987.0	200.0	993.0	200.0	1011.0
CR	205	1014	210.0	1019	211.5	1023.0	210.0	1030.0	210.0	1080.0
R	220	1080.01								
NC	0	0	0	0.1	0.35					
1	6714	29	979.0	1017.5	197.0	197.0	197.0	0.0	0.0	0
I	-1	208.24	0	0	0	0	-60.0			
X3	10									
GR	224	898	214.0	898.01	213.0	901.0	212.0	905.5	211.0	955.0
R	211.0	958.0	211.4	969.5	211.0	979.0	210.0	981.0	205.0	986.5
R	201.0	991.0	200.3	1000.0	201.1	1007.0	205.0	1010.5	210.0	1015.5
GR	211.0	1017.5	211.3	1026.5	211.0	1035.5	210.8	1043.0	211.0	1050.0
CR	212.0	1078.5	212.7	1081.5	212.0	1083.5	210.0	1086.0	208.0	1089.5
R	207.6	1092.5	209.0	1095.0	210.0	1096.5	220	1096.51		
QT	9	3330	20	200	300	400	500	600	700	800
1	7115	30.0	979.0	1022.0	401.0	401.0	401.0	0.0	0.0	0
I	-1	209.18	0	0	0	0	-60.0			
X3	10									
GR	222.1	904.5	212.1	904.51	212.0	910.0	211.9	912.0	212.0	915.0

```
GR    212.4     930.0     212.0     950.5     211.8     954.5     212.0     959.2     213.0     973.5
GR    213.1     976.5     213.0     979.0     212.0     981.5     211.5     982.5     210.0     983.5
GR    205.0     989.0     201.0     995.5     200.6    1000.0     201.0    1009.5     205.0    1012.5
GR    210.0    1018.5     211.0    1021.0     212.0    1022.0     213.0    1068.5     213.5    1077.5
GR    213.0    1086.0     210.0    1090.5     208.1    1095.0     210.0    1100.0     220.0    1100.01

QT        9     3310        20       200       300       400       500       600       700       800
X1     7515     33.0     979.5    1022.0     400.0     400.0     400.0       0.0       0.0         0
CI       -1   210.12         0         0         0         0     -60.0
X3       10
GR    224.0     902.5     220.0    902.51     214.0    902.52     214.0     903.5     213.0     921.5
GR    213.3     931.0     213.0     979.5     210.0     982.0     205.0     988.0     204.0     990.0
GR    203.0     992.0     202.0     994.5     201.0     996.0     200.9    1000.0     201.0    1007.5
GR    205.0    1011.0     210.0    1016.0     211.0    1018.0     212.0    1020.3     213.0    1022.0
GR    213.4    1033.0     213.0    1048.0     213.0    1050.0     214.0    1080.5     213.0    1083.5
GR    212.0    1085.0     210.0    1087.0     209.0    1090.0     208.9    1093.0     209.0    1095.0
GR    210.0    1096.5     212.0    1100.5     222.0   1100.51

X1     7715     32.0     978.0    1021.0     200.0     200.0     200.0       0.0       0.0         0
CI       -1   210.97         0         0         0         0     -60.0
X3       10
GR    224.5     900.0     214.5    900.01     214.0     918.5     214.0     920.0     214.4     950.0
GR    214.0     978.0     212.0     982.0     210.0     984.0     205.0     989.5     204.0     991.5
GR    202.0     993.0     201.5    1000.0     203.0    1007.0     205.0    1009.5     210.0    1014.0
GR    214.0    1021.0     214.4    1034.0     214.0    1049.0     213.9    1051.0     214.0    1054.0
GR    215.0    1075.0     215.2    1081.0     215.0    1087.0     213.0    1091.0     212.0    1091.5
GR    211.0    1094.0     211.0    1101.0     214.0    1105.5     214.5    1108.0     214.0    1109.0
```



```
GR    212.5    1123.0     222.5   1123.01

X1     7916     25.0     978.0    1019.5     201.0     201.0     201.0       0.0       0.0         0
CI       -1   211.91         0         0         0         0     -60.0
X3       10
GR    225.6     901.5     215.6    901.51     215.0     918.0     215.0     921.0     215.1     930.0
GR    216.0     978.0     215.0     980.5     210.0     986.0     205.0     991.5     204.0     993.0
GR    203.0     994.5     202.1    1000.0     203.0    1005.5     205.0    1007.5     210.0    1012.5
GR    211.0    1014.0     212.0    1015.5     213.0    1016.5     214.0    1018.0     215.0    1019.5
GR    215.6    1026.5     215.0    1052.0     215.4   1052.01     215.0    1089.0     225.0   1089.01

QT        9     2300        100       200       300       400       500       600       700       800
X1     8317     26.0     973.0    1020.5     401.0     401.0     401.0       0.0       0.0         0
CI       -1   213.79         0         0         0         0     -60.0
X3       10
GR    227.7     905.5     222.7    905.51     217.7    905.52     218.0     952.5     219.0     962.0
GR    219.4     968.0     219.0     973.0     218.0     977.0     217.0     978.5     216.0     980.0
GR    215.0     980.5     210.0     986.8     205.0     993.0     204.0     995.0     203.0    1000.0
GR    205.0    1006.0     210.0    1011.0     215.0    1016.5     216.0    1019.0     217.0    1020.5
GR    218.0    1054.0     218.6    1068.0     218.0    1080.0     217.0    1083.0     216.0    1086.0
GR    226.0   1086.01

X1     8717     31.0     976.5    1024.0     400.0     400.0     400.0       0.0       0.0         0
CI       -1   215.66         0         0         0         0     -60.0
X3       10
GR    230.1     904.5     220.1    904.51     220.0     909.0     220.0     914.0     220.4     928.0
GR    220.0     942.5     219.9     945.5     220.0     949.0     221.0     965.0     221.6     972.5
GR    221.0     976.5     220.0     978.0     215.0     982.5     210.0     988.5     205.0     992.0
GR    204.0     994.5     204.0    1000.0     204.0    1005.5     205.0    1007.0     210.0    1011.5
GR    215.0    1017.0     220.0    1022.0     221.0    1024.0     221.4    1029.5     221.0    1040.0
GR    220.9    1045.0     221.0    1050.0     221.2    1065.0     221.0    1080.0     220.0    1084.0
GR    230.0   1084.01

X1     8859       21        974      1024       142       142       142         0         0         0
CI       -1   216.33         0         0         0         0     -60.0
```

```
X3      10
GR    231.3      902    221.3   902.01    221.0      912    221.4      926    221.0      939
GR    221.3      966    221.0      974    220.0      976    210.0      987    205.0      990
GR    204.6      993    204.6     1002    205.0     1004    220.0     1020    221.0     1022
GR    222.0     1024    222.4     1032    222.0     1059    221.0     1076    220.0     1085
GR    230.0  1085.01

NC        0        0        0      0.3      0.5
X1     8977       19      976     1026      118      118      118      0.0      0.0        0
CI       -1   216.88        0        0        0        0    -60.0
X3       10
GR    232.0      900    222.0   900.01    222.0      912    222.5      924    221.6      942
GR    222.0      956    222.4      966    222.0      976    213.9   983.55    213.9      993
GR    205.9      993    205.9     1010    213.9     1010    213.9     1015    215.9     1015
GR    222.0     1026    222.0     1084    221.5     1090    232.0  1090.01
```



```
NC        0        0    0.016        0        0
QT        9     2270      100      200      300      400      500      600      700      800
SB     1.25     1.69      2.6        0       17     3.83   105.36        0   206.49   205.90
X1     9037       16      974     1029       60       60       60      0.0      0.0        0
CI       -1   217.16    0.045        0        0        0    -60.0
X2        0        0        1   214.49    222.5        0        0        0        0        0
BT       15      927    222.6    222.6      935    222.5    222.5      935    222.1    222.1
BT      974    222.6    222.6      983    222.6   214.49      983    223.9   214.49      993
BT    223.9   214.49      993    223.9   206.49     1010    223.9   206.49     1010    223.9
BT   214.49     1014    223.9   214.49     1014    222.5    216.5     1022    222.5    221.0
BT     1029    222.5    222.5     1065    222.5    222.5
GR    233.0      927    222.6   927.01    222.5      935    222.1      935    222.6      974
GR   214.49   982.05   214.49      993   206.49      993   206.49     1010   214.49     1010
GR   214.49     1014    216.5     1014    221.0     1022    222.5     1029    222.5     1065
GR    233.0  1065.01

NC        0        0    0.028        0        0
QT        9     2270      100      200      300      400      500      600      700      800
X1     9118     27.0    973.0   1025.5       81       81       81      0.0      0.0        0
CI       -1   217.54    0.045        0        0        0    -60.0
X3       10
GR    233.0    927.0    230.0   927.01    227.0   927.02    223.0   927.03    224.0    965.5
GR    224.4    969.5    224.0    973.0    223.0    975.0    222.0    976.8    221.0    978.0
GR    220.0    979.5    215.0    984.5    210.0    990.0    207.0    992.0    205.6   1000.0
GR    207.0   1007.0    210.0   1010.8    215.0   1016.0    220.0   1021.5    223.0   1025.5
GR    223.6   1039.0    223.0   1052.0    220.0   1055.5    221.0   1065.0    222.0   1068.5
GR    222.3   1084.0    233.3  1084.01

NC        0        0        0      0.1     0.35
X1     9318     30.0    979.0   1024.0    200.0    200.0    200.0      0.0      0.0        0
CI       -1   218.48        0        0        0        0    -60.0
X3       10
GR    233.9    929.0    223.9   929.01    224.0    959.5    225.0    964.5    225.6    971.5
GR    225.0    979.0    224.0    982.8    223.0    985.0    220.0    989.0    215.0    991.0
GR    210.0    994.0    208.0    995.0    206.4   1000.0    208.0   1006.0    210.0   1008.0
GR    215.0   1011.0    220.0   1017.0    225.0   1024.0    225.8   1033.0    225.0   1043.0
GR    224.9   1045.0    225.0   1049.0    225.0   1051.0    220.0   1059.5    219.5   1062.0
GR    220.0   1065.0    222.0   1067.0    223.0   1069.0    223.2   1084.5    233.2  1084.51

QT        9     1700      100      200      300      400      500      600      700      800
X1     9518     27.0    975.1   1025.0    200.0    200.0    200.0      0.0      0.0        0
CI       -1   219.41        0        0        0        0    -60.0
X3       10
GR    235.3    929.5    225.3   929.51    225.0    944.0    226.0    964.5    227.0    971.0
GR    227.1    973.1    227.0    975.1    226.0    978.8    225.0    980.3    220.0    985.0
GR    215.0    990.5    210.0    996.0    207.2   1000.0    208.0   1003.5    210.0   1005.0
```

```
GR    215.0    1008.0    220.0    1013.0    225.0    1019.0    226.0    1021.0    227.0    1025.0
GR    227.2    1034.8    225.0    1054.0    220.0    1061.0    220.0    1067.0    223.0    1071.0
GR    224.5    1084.0    234.5    1084.01
```



```
QT      9     1700      100      200      300      400      500      600      700      800
X1   9919     29.0    967.8   1030.0    401.0    401.0    401.0      0.0      0.0        0
CI     -1   221.96        0        0        0        0    -60.0
X3     10
GR   238.8    933.0    228.8    933.01   228.8    958.0    228.0    967.8    227.0    968.5
GR   226.0    973.0    225.0    975.0    223.0    979.5    220.0    985.5    215.0    992.0
GR   213.0    993.5    212.2    1000.0   213.0    1001.5   214.0    1006.0   215.0    1007.0
GR   220.0    1011.5   225.0    1018.0   227.0    1023.0   229.0    1027.0   230.0    1030.0
GR   230.2    1038.5   230.0    1048.5   225.0    1057.0   223.0    1059.0   223.0    1063.0
GR   225.0    1065.5   227.0    1070.0   227.1    1080.5   237.1    1080.51

X1   10119    21.0     976.0    1023.0   200.0    200.0    200.0    0.0      0.0      0.0
CI     -1   223.70        0        0        0        0    -60.0
X3     10
GR   240.3    934.5    230.3    934.51   230.4    962.0    230.0    976.0    225.0    984.8
GR   220.0    993.5    215.0    1000.0   217.0    1004.0   218.0    1007.5   220.0    1008.5
GR   225.0    1013.0   229.0    1019.5   230.0    1023.0   230.7    1034.0   230.0    1048.0
GR   225.0    1058.0   224.7    1060.5   225.0    1064.0   228.0    1066.0   229.0    1076.0
GR   239.0    1076.01

X1   10319    32.0     972.5    1028.0   200.0    200.0    200.0    0.0      0.0        0
CI     -1   225.43        0        0        0        0    -60.0
X3     10
GR   243.0    948.0    233.0    948.01   232.6    948.02   232.0    972.5    231.0    974.0
GR   230.0    978.0    225.0    990.0    220.0    995.0    219.0    996.0    218.0    998.0
GR   217.8    1000.0   218.0    1001.0   219.0    1002.0   220.0    1003.0   225.0    1010.0
GR   230.0    1019.0   231.0    1021.5   232.0    1024.0   232.8    1028.0   232.9    1034.0
GR   232.8    1043.0   233.0    1054.0   233.0    1055.0   232.0    1056.5   230.0    1058.0
GR   229.0    1060.0   228.6    1062.0   229.0    1064.0   230.0    1065.0   231.0    1067.5
GR   231.0    1070.0   241.0    1070.01

X1   10720    34.0     981.0    1019.5   401.0    401.0    401.0    0.0      0.0        0
CI     -1   228.91        0        0        0        0    -60.0
X3     10
GR   246.0    955.0    236.0    955.01   236.0    964.0    236.0    969.5    237.0    979.0
GR   237.1    981.0    236.0    984.5    235.0    986.5    230.0    993.5    225.0    995.5
GR   221.0    997.0    220.5    1000.0   221.0    1003.5   225.0    1005.0   230.0    1010.5
GR   231.0    1012.0   232.0    1013.5   233.0    1015.0   234.0    1016.0   235.0    1017.0
GR   236.0    1019.5   236.5    1037.0   236.0    1052.5   235.0    1054.5   234.0    1056.0
GR   233.0    1057.0   232.0    1058.5   231.0    1059.0   230.1    1064.0   231.0    1068.0
GR   232.0    1069.0   233.0    1070.0   233.0    1073.5   243.0    1073.51

X1   11120    32.0     976.0    1028.0   400.0    400.0    400.0    0.0      0.0        0
CI     -1   232.37        0        0        0        0    -60.0
X3     10
GR   249.6    949.5    239.6    949.51   240.0    953.5    241.0    970.5    241.3    973.0
GR   241.0    976.0    240.0    978.5    239.0    981.0    238.0    982.0    237.0    983.5
GR   236.0    984.5    235.0    986.0    230.0    992.5    225.0    996.0    222.0    997.0
GR   222.0    1004.0   225.0    1005.0   230.0    1008.5   231.0    1011.5   232.0    1014.0
GR   233.0    1015.0   234.0    1017.0   235.0    1018.0   236.0    1020.0   237.0    1021.5
GR   238.0    1023.0   239.0    1025.5   240.0    1028.0   240.5    1038.5   240.0    1047.5
GR   239.7    1049.0   249.7    1049.01
```



```
X1   11408    16.0     978.0    1022.3   288.0    288.0    288.0    0.0      0.0        0
```

SC	CUNO	CUNV	ENTLC	COFQ	RDLEN	RISE	SPAN	CULVLN	CHRT	SCL	ELCHU	ELCHD
	2	.014	.20	2.60	.00	10.00	12.00	274.00	9	2	179.85	177.11

CHART 9 - BOX CULVERT WITH FLARED WINGWALL AND INLET TOP EDGE BEVEL
SCALE 2 - WINGWALL FLARED 18 TO 33.7 DEGREES; INLET TOP EDGE BEVEL = 0.083D

*SECNO 1000.000
WATER EL=X5 CARD= 195.200
3280 CROSS SECTION 1000.00 EXTENDED 2.20 FEET

1000.000	15.35	195.20	.00	.00	196.88	1.68	.06	.33	179.85
4710.0	51.1	4325.6	333.3	52.0	399.1	172.0	11.1	1.3	179.85
.02	.98	10.84	1.94	.035	.015	.035	.000	179.85	966.00
.000314	274.	274.	274.	0	0	0	.00	104.00	1070.00

1
14DEC93 17:16:25 PAGE 13

SECNO	DEPTH	CWSEL	CRIWS	WSELK	EG	HV	HL	OLOSS	L-BANK ELEV
Q	QLOB	QCH	QROB	ALOB	ACH	AROB	VOL	TWA	R-BANK ELEV
TIME	VLOB	VCH	VROB	XNL	XNCH	XNR	WTN	ELMIN	SSTA
SLOPE	XLOBL	XLCH	XLOBR	ITRIAL	IDC	ICONT	CORAR	TOPWID	ENDST

*SECNO 1110.000

3301 HV CHANGED MORE THAN HVINS

3302 WARNING: CONVEYANCE CHANGE OUTSIDE OF ACCEPTABLE RANGE, KRATIO = .29

1110.000	14.99	195.99	.00	.00	197.13	1.13	.08	.16	195.00
4710.0	.0	4600.6	109.4	.0	532.4	41.7	12.6	1.6	195.00
.03	.02	8.64	2.63	.040	.045	.040	.000	181.00	973.09
.003826	111.	110.	108.	3	0	0	.00	84.91	1058.00

CCHV= .100 CEHV= .350
*SECNO 1514.000

3495 OVERBANK AREA ASSUMED NON-EFFECTIVE, ELLEA= 198.60 ELREA= 198.60

1514.000	16.46	197.56	.00	.00	198.61	1.05	1.48	.01	198.60
4710.0	.0	4710.0	.0	.0	572.8	.0	17.9	2.2	198.60
.04	.00	8.22	.00	.000	.045	.000	.000	181.10	974.87
.003506	418.	404.	390.	3	0	0	.00	53.11	1027.98

*SECNO 1912.000

3495 OVERBANK AREA ASSUMED NON-EFFECTIVE, ELLEA= 203.00 ELREA= 202.70

1912.000	17.28	198.98	.00	.00	199.81	.83	1.18	.02	203.00
4490.0	.0	4490.0	.0	.0	613.7	.0	23.3	2.7	202.70
.06	.00	7.32	.00	.000	.045	.000	.000	181.70	976.42
.002516	408.	398.	388.	2	0	0	.00	51.63	1028.05

*SECNO 2312.000

3495 OVERBANK AREA ASSUMED NON-EFFECTIVE, ELLEA= 204.00 ELREA= 203.00

2312.000	17.02	200.02	.00	.00	200.99	.98	1.13	.05	204.00
4490.0	.0	4490.0	.0	.0	565.5	.0	28.7	3.2	203.00

```
     .07       .00      7.94       .00      .000      .045      .000      .000    183.00    974.19
  .003188      410.      400.      390.         2         0         0       .00     50.33   1024.52


1
  14DEC93      17:16:25                                                                                PAGE   14


   SECNO     DEPTH     CWSEL     CRIWS     WSELK     EG        HV        HL        OLOSS     L-BANK ELEV
   Q         QLOB      QCH       QROB      ALOB      ACH       AROB      VOL       TWA       R-BANK ELEV
   TIME      VLOB      VCH       VROB      XNL       XNCH      XNR       WTN       ELMIN     SSTA
   SLOPE     XLOBL     XLCH      XLOBR     ITRIAL    IDC       ICONT     CORAR     TOPWID    ENDST


 CHV=     .300 CEHV=     .500
 SECNO 2485.000

 301 HV CHANGED MORE THAN HVINS


3302 WARNING:  CONVEYANCE CHANGE OUTSIDE OF ACCEPTABLE RANGE,  KRATIO =   .33


3495 OVERBANK AREA ASSUMED NON-EFFECTIVE, ELLEA=       203.00 ELREA=       203.00

  2485.000     16.10    200.00    199.79       .00    203.50      3.50      1.25      1.26    203.00
    4490.0        .0    4490.0        .0       .0     299.3        .0      30.4       3.3    203.00
       .07       .00     15.00       .00      .000      .045      .000      .000    183.90    977.49
   .029247      173.      173.      173.         6        11         0       .00     41.02   1018.51


*SECNO 2515.000
 685 20 TRIALS ATTEMPTED WSEL,CWSEL
 710 WSEL ASSUMED BASED ON MIN DIFF
  2515.000     16.83    200.83    199.92       .00    203.89      3.06       .21       .25    203.00
    4490.0        .0    4490.0        .0       .0     319.8        .0      30.6       3.4    203.00
       .07       .00     14.04       .00      .000      .016      .000      .000    184.00    976.10
   .003046       30.       30.       30.        20         5         0       .00     42.48   1018.57


 SECNO 2530.000
 185 MINIMUM SPECIFIC ENERGY
3720 CRITICAL DEPTH ASSUMED
  2530.000     13.10    201.40    201.40       .00    204.29      2.89       .05       .05    203.00
    4490.0        .0    4490.0        .0       .0     329.4        .0      30.8       3.4    203.00
       .07       .00     13.63       .00      .000      .016      .000      .000    188.30    965.78
   .003129       15.       15.       15.         4        16         0       .00     57.09   1022.87


*SECNO 2712.000

 301 HV CHANGED MORE THAN HVINS


3302 WARNING:  CONVEYANCE CHANGE OUTSIDE OF ACCEPTABLE RANGE,  KRATIO =  1.50


  14DEC93      17:16:25                                                                                PAGE   15


   SECNO     DEPTH     CWSEL     CRIWS     WSELK     EG        HV        HL        OLOSS     L-BANK ELEV
   Q         QLOB      QCH       QROB      ALOB      ACH       AROB      VOL       TWA       R-BANK ELEV
   TIME      VLOB      VCH       VROB      XNL       XNCH      XNR       WTN       ELMIN     SSTA
   SLOPE     XLOBL     XLCH      XLOBR     ITRIAL    IDC       ICONT     CORAR     TOPWID    ENDST
```

3495 OVERBANK AREA ASSUMED NON-EFFECTIVE, ELLEA= 204.00 ELREA= 203.00

2712.000	15.41	203.91	.00	.00	205.14	1.23	.36	.50	204.00
4410.0	.0	4362.1	47.9	.0	488.1	33.9	32.5	3.7	203.00
.08	.00	8.94	1.41	.000	.025	.040	.000	188.50	975.91
.001340	182.	182.	182.	3	0	0	.00	81.09	1057.00

CCHV= .100 CEHV= .350
*SECNO 3112.000

3265 DIVIDED FLOW

3495 OVERBANK AREA ASSUMED NON-EFFECTIVE, ELLEA= 205.40 ELREA= 204.00

3112.000	15.01	204.41	.00	.00	205.78	1.38	.59	.05	205.40
4410.0	.0	4364.6	45.4	.0	461.0	27.2	37.2	4.4	204.00
.09	.00	9.47	1.67	.000	.025	.040	.000	189.40	973.83
.001633	400.	400.	400.	2	0	0	.00	81.76	1060.00

*SECNO 3513.000

3265 DIVIDED FLOW

3513.000	14.21	205.01	.00	.00	206.55	1.54	.71	.06	205.00
4350.0	13.9	4263.3	72.7	14.5	423.5	39.8	41.6	5.3	205.00
.10	.96	10.07	1.83	.040	.025	.040	.000	190.80	896.01
.001917	401.	401.	401.	0	0	0	.00	113.67	1080.00

*SECNO 3913.000

3495 OVERBANK AREA ASSUMED NON-EFFECTIVE, ELLEA= 205.80 ELREA= 206.00

3913.000	14.36	205.66	.00	.00	207.54	1.88	.87	.12	205.80
4350.0	.0	4350.0	.0	.0	395.4	.0	45.6	6.1	206.00
.11	.00	11.00	.00	.000	.025	.000	.000	191.30	976.43
.002507	400.	400.	400.	2	0	0	.00	45.06	1021.49

1

SECNO	DEPTH	CWSEL	CRIWS	WSELK	EG	HV	HL	OLOSS	L-BANK ELEV
Q	QLOB	QCH	QROB	ALOB	ACH	AROB	VOL	TWA	R-BANK ELEV
TIME	VLOB	VCH	VROB	XNL	XNCH	XNR	WTN	ELMIN	SSTA
SLOPE	XLOBL	XLCH	XLOBR	ITRIAL	IDC	ICONT	CORAR	TOPWID	ENDST

*SECNO 4313.000

3301 HV CHANGED MORE THAN HVINS

3302 WARNING: CONVEYANCE CHANGE OUTSIDE OF ACCEPTABLE RANGE, KRATIO = 1.57

4313.000	14.96	207.56	.00	.00	208.27	.71	.61	.12	205.00
4350.0	469.0	3253.3	627.7	211.0	423.8	221.8	51.4	7.1	207.00
.13	2.22	7.68	2.83	.040	.025	.040	.000	192.60	899.01
.001023	400.	400.	400.	6	0	0	.00	189.00	1088.01

```
*SECNO 4713.000
  4713.000     15.22    208.02       .00       .00    208.66       .64       .39       .01    206.60
    3850.0     221.7    3056.5     571.8     125.0     429.9     224.5      58.9       8.8    206.00
       .15      1.77      7.11      2.55      .040      .025      .040      .000    192.80    915.03
   .000915      400.      400.      400.         2         0         0       .00    169.98   1085.00


 SECNO 5113.000
  5113.000     13.87    208.37       .00       .00    209.07       .69       .39       .02    207.20
    3540.0     133.1    2947.6     459.4      90.1     405.6     198.2      65.7      10.4    207.00
       .17      1.48      7.27      2.32      .040      .025      .040      .000    194.50    913.52
   .001022      400.      400.      400.         2         0         0       .00    181.48   1095.00


 *SECNO 5513.000

3301 HV CHANGED MORE THAN HVINS

  5513.000     12.95    208.55       .00       .00    209.76      1.21       .51       .18    207.00
    3530.0     103.8    3245.1     181.2      67.7     352.8      95.0      71.2      12.0    207.00
       .18      1.53      9.20      1.91      .040      .025      .040      .000    195.60    912.01
   .001643      400.      400.      400.         2         0         0       .00    172.99   1085.00


*SECNO 5914.000                                                                  |
  5914.000     12.57    209.17       .00       .00    210.47      1.30       .68       .03    208.00
    3530.0      19.6    3419.9      90.5      17.8     367.8      61.6      75.6      13.5    208.00
       .19      1.10      9.30      1.47      .040      .025      .040      .000    196.60    932.43
   .001752      401.      401.      401.         2         0         0       .00    153.77   1086.20


1
   14DEC93      17:16:25                                                                          PAGE   17


    SECNO      DEPTH      CWSEL      CRIWS      WSELK       EG         HV         HL      OLOSS    L-BANK ELEV
    Q          QLOB       QCH        QROB       ALOB       ACH       AROB        VOL        TWA    R-BANK ELEV
    TIME       VLOB       VCH        VROB       XNL        XNCH       XNR        WTN      ELMIN    SSTA
    SLOPE      XLOBL      XLCH       XLOBR      ITRIAL     IDC       ICONT      CORAR     TOPWID    ENDST


 *SECNO 6156.000

3301 HV CHANGED MORE THAN HVINS


3495 OVERBANK AREA ASSUMED NON-EFFECTIVE, ELLEA=       210.00 ELREA=       209.80

  6156.000     11.55    209.35       .00       .00    211.19      1.84       .53       .19    210.00
    3530.0        .0    3530.0        .0        .0     324.2        .0      77.8      14.1    209.80
       .20       .00     10.89       .00      .000      .025      .000      .000    197.80    978.65
   .002856      242.      242.      242.         2         0         0       .00     41.99   1020.64


CCHV=      .300 CEHV=      .500
*SECNO 6307.000
7185 MINIMUM SPECIFIC ENERGY
3720 CRITICAL DEPTH ASSUMED
  6307.000     12.82    211.57    211.57       .00    213.36      1.79       .47       .01    209.75
    3530.0     266.1    3066.3     197.6     104.9     266.9      73.2      79.1      14.4    210.10
       .20      2.54     11.49      2.70      .040      .025      .040      .000    198.75    908.01
   .003386      151.      151.      151.         3        15         0       .00    154.99   1063.00


SPECIAL BRIDGE
```

SB XK	XKOR	COFQ	RDLEN	BWC	BWP	BAREA	SS	ELCHU	ELCHD
1.25	1.58	2.60	.00	20.50	1.50	190.00	.01	199.51	198.75

*SECNO 6388.000

301 HV CHANGED MORE THAN HVINS

3302 WARNING: CONVEYANCE CHANGE OUTSIDE OF ACCEPTABLE RANGE, KRATIO = 2.73

RESSURE AND WEIR FLOW, Weir Submergence Based on TRAPEZOIDAL Shape

EGPRS	EGLWC	H3	QWEIR	QPR	BAREA	TRAPEZOID AREA	ELLC	ELTRD	WEIRLN
219.75	214.04	.67	1228.	2250.	190.	193.	209.61	210.61	57.

6388.000	14.85	214.46	.00	.00	215.01	.55	1.65	.00	210.61
3470.0	721.7	2240.5	507.7	368.9	308.7	257.4	80.4	14.7	210.61
.21	1.96	7.26	1.97	.040	.016	.040	.000	199.61	901.01
.000438	81.	81.	81.	2	0	2	.00	169.00	1070.00

SECNO	DEPTH	CWSEL	CRIWS	WSELK	EG	HV	HL	OLOSS	L-BANK ELEV
Q	QLOB	QCH	QROB	ALOB	ACH	AROB	VOL	TWA	R-BANK ELEV
TIME	VLOB	VCH	VROB	XNL	XNCH	XNR	WTN	ELMIN	SSTA
SLOPE	XLOBL	XLCH	XLOBR	ITRIAL	IDC	ICONT	CORAR	TOPWID	ENDST

*SECNO 6517.000

6517.000	14.85	214.85	.00	.00	215.14	.29	.05	.08	211.30
3470.0	498.4	2445.3	526.3	280.7	491.3	271.4	83.3	15.2	211.50
.21	1.78	4.98	1.94	.040	.025	.040	.000	200.00	908.01
.000380	129.	129.	129.	2	0	0	.00	172.00	1080.00

CCHV= .100 CEHV= .350

*SECNO 6714.000

6714.000	14.60	214.90	.00	.00	215.24	.35	.08	.02	211.00
3470.0	499.7	2345.3	625.0	272.3	417.8	311.1	87.9	16.1	211.00
.23	1.83	5.61	2.01	.040	.025	.040	.000	200.30	898.01
.000475	197.	197.	197.	2	0	0	.00	198.50	1096.50

*SECNO 7115.000

7115.000	14.45	215.05	.00	.00	215.49	.43	.21	.03	213.00
3330.0	369.2	2555.7	405.1	208.8	430.1	223.9	96.5	17.9	212.00
.25	1.77	5.94	1.81	.040	.025	.040	.000	200.60	904.51
.000591	401.	401.	401.	1	0	0	.00	195.50	1100.01

*SECNO 7515.000

7515.000	14.36	215.26	.00	.00	215.76	.51	.25	.03	213.00
3310.0	240.6	2663.3	406.1	155.8	422.9	204.7	104.1	19.7	213.00
.27	1.54	6.30	1.98	.040	.025	.040	.000	200.90	902.52
.000674	400.	400.	400.	0	0	0	.00	197.99	1100.50

*SECNO 7715.000

7715.000	13.71	215.21	.00	.00	216.07	.86	.18	.13	214.00

3310.0	103.2	2921.5	285.3	77.9	369.4	138.5	107.2	20.6	214.00
.28	1.32	7.91	2.06	.040	.025	.040	.000	201.50	900.01
.001284	200.	200.	200.	2	0	0	.00	222.99	1123.00

*SECNO 7916.000

3301 HV CHANGED MORE THAN HVINS

3302 WARNING: CONVEYANCE CHANGE OUTSIDE OF ACCEPTABLE RANGE, KRATIO = .65

1

SECNO	DEPTH	CWSEL	CRIWS	WSELK	EG	HV	HL	OLOSS	L-BANK ELEV
Q	QLOB	QCH	QROB	ALOB	ACH	AROB	VOL	TWA	R-BANK ELEV
TIME	VLOB	VCH	VROB	XNL	XNCH	XNR	WTN	ELMIN	SSTA
SLOPE	XLOBL	XLCH	XLOBR	ITRIAL	IDC	ICONT	CORAR	TOPWID	ENDST

3495 OVERBANK AREA ASSUMED NON-EFFECTIVE, ELLEA= 216.00 ELREA= 215.00

7916.000	12.80	214.90	.00	.00	216.82	1.91	.38	.37	216.00
3310.0	.0	3310.0	.0	.0	298.1	.0	109.3	21.2	215.00
.28	.00	11.10	.00	.000	.025	.000	.000	202.10	980.61
.003040	201.	201.	201.	2	0	0	.00	38.75	1019.35

*SECNO 8317.000

3301 HV CHANGED MORE THAN HVINS

3495 OVERBANK AREA ASSUMED NON-EFFECTIVE, ELLEA= 219.00 ELREA= 217.00

8317.000	13.95	216.95	.00	.00	217.69	.74	.76	.12	219.00
2300.0	.0	2300.0	.0	.0	334.1	.0	112.2	21.6	217.00
.30	.00	6.88	.00	.000	.025	.000	.000	203.00	978.57
.001107	401.	401.	401.	3	0	0	.00	41.86	1020.43

*SECNO 8717.000

3495 OVERBANK AREA ASSUMED NON-EFFECTIVE, ELLEA= 221.00 ELREA= 221.00

8717.000	13.41	217.41	.00	.00	218.12	.71	.42	.00	221.00
2300.0	.0	2300.0	.0	.0	340.3	.0	115.3	22.0	221.00
.32	.00	6.76	.00	.000	.025	.000	.000	204.00	980.33
.001008	400.	400.	400.	2	0	0	.00	39.07	1019.41

*SECNO 8859.000

3495 OVERBANK AREA ASSUMED NON-EFFECTIVE, ELLEA= 221.00 ELREA= 222.00

8859.000	12.91	217.51	.00	.00	218.29	.78	.15	.03	221.00
2300.0	.0	2300.0	.0	.0	324.4	.0	116.4	22.1	222.00
.32	.00	7.09	.00	.000	.025	.000	.000	204.60	978.74
.001156	142.	142.	142.	2	0	0	.00	38.61	1017.35

1

```
   SECNO     DEPTH     CWSEL     CRIWS     WSELK     EG        HV        HL        OLOSS     L-BANK ELEV
   Q         QLOB      QCH       QROB      ALOB      ACH       AROB      VOL       TWA       R-BANK ELEV
   TIME      VLOB      VCH       VROB      XNL       XNCH      XNR       WTN       ELMIN     SSTA
   SLOPE     XLOBL     XLCH      XLOBR     ITRIAL    IDC       ICONT     CORAR     TOPWID    ENDST


CCHV=     .300 CEHV=     .500
*SECNO 8977.000

 302 WARNING:  CONVEYANCE CHANGE OUTSIDE OF ACCEPTABLE RANGE,  KRATIO =   .61


 495 OVERBANK AREA ASSUMED NON-EFFECTIVE, ELLEA=       222.00 ELREA=       222.00

  8977.000     11.59    217.49       .00       .00    218.73      1.24       .21       .23    222.00
    2300.0        .0    2300.0        .0        .0     257.3        .0     117.1      22.2    222.00
       .32       .00      8.94       .00      .000      .025      .000      .000    205.90    980.20
   .003077      118.      118.      118.         2         0         0       .00     37.67   1017.87



SPECIAL BRIDGE

 227 DOWNSTREAM ELEV IS     211.57 , NOT     217.49 HYDRAULIC JUMP OCCURS DOWNSTREAM (IF LOW FLOW CONTROLS)

SB  XK        XKOR      COFQ      RDLEN     BWC       BWP       BAREA     SS        ELCHU     ELCHD
     1.25      1.69      2.60       .00     17.00      3.83    105.36       .00    206.49    205.90

 SECNO 9037.000

~301 HV CHANGED MORE THAN HVINS


3302 WARNING:  CONVEYANCE CHANGE OUTSIDE OF ACCEPTABLE RANGE,  KRATIO =  4.45

'RESSURE AND WEIR FLOW,  Weir Submergence Based on TRAPEZOIDAL Shape


 EGPRS      EGLWC      H3        QWEIR     QPR       BAREA   TRAPEZOID      ELLC      ELTRD     WEIRLN
                                                              AREA
    229.67    221.45       .00      601.     1673.      105.      105.     214.49    222.50      138.


  9037.000     17.37    223.86       .00       .00    224.11       .26      5.38       .00    222.60
    2270.0      40.2    2203.1      26.7      69.2     533.6      48.8     117.8      22.3    222.50
       .33       .58      4.13       .55      .040      .016      .040      .000    206.49    927.01
   .000151       60.       60.       60.         2         0         4       .00    137.99   1065.00


'SECNO 9118.000

   14DEC93      17:16:25                                                                                PAGE   21


   SECNO     DEPTH     CWSEL     CRIWS     WSELK     EG        HV        HL        OLOSS     L-BANK ELEV
   Q         QLOB      QCH       QROB      ALOB      ACH       AROB      VOL       TWA       R-BANK ELEV
   TIME      VLOB      VCH       VROB      XNL       XNCH      XNR       WTN       ELMIN     SSTA
   SLOPE     XLOBL     XLCH      XLOBR     ITRIAL    IDC       ICONT     CORAR     TOPWID    ENDST


3495 OVERBANK AREA ASSUMED NON-EFFECTIVE, ELLEA=       224.00 ELREA=       223.00

  9118.000     18.32    223.92       .00       .00    224.14       .22       .02       .01    224.00
```

```
   2270.0        .0    2173.6      96.4        .0     564.4      93.3     119.0      22.6    223.00
      .33       .00      3.85      1.03      .000      .028      .040      .000    205.60    973.16
  .000297       81.       81.       81.         2         0         0       .00    110.84   1084.00


CCHV=     .100 CEHV=     .350
 SECNO 9318.000

3302 WARNING:  CONVEYANCE CHANGE OUTSIDE OF ACCEPTABLE RANGE,  KRATIO =   .52


 395 OVERBANK AREA ASSUMED NON-EFFECTIVE, ELLEA=       225.00 ELREA=       225.00

  9318.000     17.37    223.77       .00       .00    224.38       .60       .10       .13    225.00
   2270.0        .0    2270.0        .0        .0     364.2        .0     121.3      22.9    225.00
      .34       .00      6.23       .00      .000      .028      .000      .000    206.40    983.30
  .001102      200.      200.      200.         2         0         0       .00     38.99   1022.28


-SECNO 9518.000

 495 OVERBANK AREA ASSUMED NON-EFFECTIVE, ELLEA=       227.00 ELREA=       227.00

  9518.000     16.98    224.18       .00       .00    224.58       .41       .19       .02    227.00
   1700.0        .0    1700.0        .0        .0     331.1        .0     122.9      23.1    227.00
      .35       .00      5.13       .00      .000      .028      .000      .000    207.20    981.07
  .000773      200.      200.      200.         2         0         0       .00     36.94   1018.01


 SECNO 9919.000

3495 OVERBANK AREA ASSUMED NON-EFFECTIVE, ELLEA=       228.00 ELREA=       230.00

  9919.000     12.26    224.46       .00       .00    225.04       .57       .39       .06    228.00
   1700.0        .0    1700.0        .0        .0     279.6        .0     125.7      23.4    230.00
      .37       .00      6.08       .00      .000      .028      .000      .000    212.20    976.21
  .001298      401.      401.      401.         2         0         0       .00     41.09   1017.30


1
   14DEC93      17:16:25                                                                          PAGE   22


    SECNO     DEPTH     CWSEL     CRIWS     WSELK        EG        HV        HL     OLOSS   L-BANK ELEV
    Q         QLOB      QCH       QROB      ALOB       ACH      AROB       VOL       TWA   R-BANK ELEV
    TIME      VLOB      VCH       VROB      XNL       XNCH       XNR       WTN     ELMIN      SSTA
    SLOPE     XLOBL     XLCH      XLOBR     ITRIAL     IDC     ICONT     CORAR    TOPWID     ENDST


*SECNO 10119.000

 301 HV CHANGED MORE THAN HVINS

3685 20 TRIALS ATTEMPTED WSEL,CWSEL
3693 PROBABLE MINIMUM SPECIFIC ENERGY
 720 CRITICAL DEPTH ASSUMED

3495 OVERBANK AREA ASSUMED NON-EFFECTIVE, ELLEA=       230.00 ELREA=       230.00

 10119.000      9.37    224.37    224.37       .00    226.92      2.55       .55       .69    230.00
   1700.0        .0    1700.0        .0        .0     132.6        .0     126.7      23.6    230.00
      .38       .00     12.82       .00      .000      .028      .000      .000    215.00    985.90
  .009194      200.      200.      200.        20        15         0       .00     26.52   1012.43


*SECNO 10319.000
```

3685 20 TRIALS ATTEMPTED WSEL,CWSEL
3693 PROBABLE MINIMUM SPECIFIC ENERGY
3720 CRITICAL DEPTH ASSUMED

3495 OVERBANK AREA ASSUMED NON-EFFECTIVE, ELLEA= 232.00 ELREA= 232.80

10319.000	9.47	227.27	227.27	.00	229.63	2.35	1.81	.02	232.00
1700.0	.0	1700.0	.0	.0	138.1	.0	127.3	23.7	232.80
.38	.00	12.31	.00	.000	.028	.000	.000	217.80	984.54
.008880	200.	200.	200.	20	5	0	.00	29.55	1014.09

*SECNO 10720.000

3301 HV CHANGED MORE THAN HVINS

7185 MINIMUM SPECIFIC ENERGY
3720 CRITICAL DEPTH ASSUMED

3495 OVERBANK AREA ASSUMED NON-EFFECTIVE, ELLEA= 237.10 ELREA= 236.00

10720.000	10.69	231.19	231.19	.00	234.20	3.01	4.05	.23	237.10
1700.0	.0	1700.0	.0	.0	122.1	.0	128.5	24.0	236.00
.39	.00	13.92	.00	.000	.028	.000	.000	220.50	991.84
.011597	401.	401.	401.	2	8	0	.00	20.45	1012.28

1

SECNO	DEPTH	CWSEL	CRIWS	WSELK	EG	HV	HL	OLOSS	L-BANK ELEV
Q	QLOB	QCH	QROB	ALOB	ACH	AROB	VOL	TWA	R-BANK ELEV
TIME	VLOB	VCH	VROB	XNL	XNCH	XNR	WTN	ELMIN	SSTA
SLOPE	XLOBL	XLCH	XLOBR	ITRIAL	IDC	ICONT	CORAR	TOPWID	ENDST

*SECNO 11120.000

3301 HV CHANGED MORE THAN HVINS

3302 WARNING: CONVEYANCE CHANGE OUTSIDE OF ACCEPTABLE RANGE, KRATIO = 2.15

3495 OVERBANK AREA ASSUMED NON-EFFECTIVE, ELLEA= 241.00 ELREA= 240.00

11120.000	13.38	235.38	.00	.00	236.28	.90	1.87	.21	241.00
1700.0	.0	1700.0	.0	.0	223.4	.0	130.1	24.2	240.00
.40	.00	7.61	.00	.000	.028	.000	.000	222.00	985.43
.002512	400.	400.	400.	2	0	0	.00	33.33	1018.76

*SECNO 11408.000

3301 HV CHANGED MORE THAN HVINS

7185 MINIMUM SPECIFIC ENERGY
3720 CRITICAL DEPTH ASSUMED

3495 OVERBANK AREA ASSUMED NON-EFFECTIVE, ELLEA= 241.00 ELREA= 241.00

11408.000	9.42	235.42	235.42	.00	238.27	2.85	1.28	.68	241.00
1700.0	.0	1700.0	.0	.0	125.4	.0	131.2	24.4	241.00
.41	.00	13.55	.00	.000	.028	.000	.000	226.00	989.29
.009794	288.	288.	288.	4	19	0	.00	22.30	1011.58

CCHV= .100 CEHV= .350
*SECNO 11558.000

3301 HV CHANGED MORE THAN HVINS

3495 OVERBANK AREA ASSUMED NON-EFFECTIVE, ELLEA= 243.00 ELREA= 243.00

11558.000	8.43	237.65	.00	.00	239.54	1.89	1.18	.10	243.00
1700.0	.0	1700.0	.0	.0	154.1	.0	131.7	24.5	243.00
.41	.00	11.03	.00	.000	.028	.000	.000	229.22	993.00
.006416	149.	150.	151.	3	0	0	.00	20.00	1013.00

1
14DEC93 17:16:25 PAGE 24

SECNO	DEPTH	CWSEL	CRIWS	WSELK	EG	HV	HL	OLOSS	L-BANK ELEV
Q	QLOB	QCH	QROB	ALOB	ACH	AROB	VOL	TWA	R-BANK ELEV
TIME	VLOB	VCH	VROB	XNL	XNCH	XNR	WTN	ELMIN	SSTA
SLOPE	XLOBL	XLCH	XLOBR	ITRIAL	IDC	ICONT	CORAR	TOPWID	ENDST

SPECIAL BRIDGE

3227 DOWNSTREAM ELEV IS 233.41 , NOT 237.65 HYDRAULIC JUMP OCCURS DOWNSTREAM (IF LOW FLOW CONTROLS)

SB	XK	XKOR	COFQ	RDLEN	BWC	BWP	BAREA	SS	ELCHU	ELCHD
	1.25	1.69	2.60	.00	18.17	5.00	105.36	.00	229.70	229.22

*SECNO 11690.000

3265 DIVIDED FLOW

3301 HV CHANGED MORE THAN HVINS

3302 WARNING: CONVEYANCE CHANGE OUTSIDE OF ACCEPTABLE RANGE, KRATIO = 3.92

PRESSURE AND WEIR FLOW, Weir Submergence Based on TRAPEZOIDAL Shape

EGPRS	EGLWC	H3	QWEIR	QPR	BAREA	TRAPEZOID AREA	ELLC	ELTRD	WEIRLN
244.01	242.32	.00	15.	1613.	105.	105.	237.70	243.10	26.

11690.000	13.65	243.35	.00	.00	243.81	.45	4.26	.00	243.60
1640.0	.0	1639.8	.2	.0	304.1	1.2	132.4	24.6	243.80
.42	.00	5.39	.17	.000	.016	.040	.000	229.70	976.69
.000389	129.	132.	136.	2	0	3	.00	48.91	1074.64

PROFILE FOR STREAM SUB-CRITICAL FLOW M4-2FT

PLOTTED POINTS (BY PRIORITY) E-ENERGY,W-WATER SURFACE,I-INVERT,C-CRITICAL W.S.,L-LEFT BANK,R-RIGHT BANK,M-LOWER END STA

THIS RUN EXECUTED 14DEC93 17:16:31

****
C-2 WATER SURFACE PROFILES

Version 4.6.2; May 1991
****

NOTE- ASTERISK (*) AT LEFT OF CROSS-SECTION NUMBER INDICATES MESSAGE IN SUMMARY OF ERRORS LIST

S -CRITICAL FLOW M4-2FT

SUMMARY PRINTOUT

	SECNO	Q	XLCH	TOPWID	AREA	VCH	XLBEL	RBEL	CWSEL	ELMIN
*	.000	4710.00	.00	16.00	221.91	21.23	100000.00	100000.00	183.70	169.67
	.000	5470.00	.00	16.00	250.06	21.87	100000.00	100000.00	185.46	169.67
*	384.000	4710.00	384.00	16.02	219.01	21.51	186.71	186.71	185.56	171.71
*	384.000	5470.00	384.00	116.00	894.91	10.51	186.71	186.71	192.38	171.71
*	434.000	4710.00	50.00	16.02	222.51	21.17	188.36	188.36	186.04	171.98
*	434.000	5470.00	50.00	116.00	588.80	14.64	188.36	188.36	191.20	171.98
*	484.000	4710.00	50.00	16.02	221.88	21.23	190.00	190.00	186.83	172.80
*	484.000	5470.00	50.00	116.00	557.36	14.92	190.00	190.00	192.45	172.80
*	684.000	4710.00	200.00	126.00	1010.31	7.44	190.00	190.00	195.19	176.07
*	684.000	5470.00	200.00	126.00	1023.76	8.55	190.00	190.00	195.30	176.07
	726.000	4710.00	42.00	126.00	918.62	8.72	177.11	177.11	195.03	177.11
	726.000	5470.00	42.00	126.00	924.73	10.08	177.11	177.11	195.07	177.11
*	1000.000	4710.00	274.00	104.00	623.04	10.84	179.85	179.85	195.20	179.85
	1000.000	5470.00	274.00	104.00	799.78	10.85	179.85	179.85	196.90	179.85
*	1110.000	4710.00	110.00	84.91	574.09	8.64	195.00	195.00	195.99	181.00
	1110.000	1170.00	110.00	84.95	392.93	3.56	200.00	195.00	198.82	193.81
	1514.000	4710.00	404.00	53.11	572.83	8.22	198.60	198.60	197.56	181.10
*	1514.000	1170.00	404.00	83.00	238.67	5.48	208.60	198.60	198.99	194.78
	1912.000	4490.00	398.00	51.63	613.70	7.32	203.00	202.70	198.98	181.70
*	1912.000	950.00	398.00	57.08	116.61	8.15	203.00	207.62	200.59	197.74
	2312.000	4490.00	400.00	50.33	565.51	7.94	204.00	203.00	200.02	183.00
*	2312.000	950.00	400.00	93.50	243.18	3.91	204.31	210.70	202.47	198.70

1

	SECNO	Q	XLCH	TOPWID	AREA	VCH	XLBEL	RBEL	CWSEL	ELMIN
*	2485.000	4490.00	173.00	41.02	299.25	15.00	203.00	203.00	200.00	183.90
	2485.000	950.00	173.00	101.78	264.13	3.60	203.63	208.86	202.72	199.11
*	2515.000	4490.00	30.00	42.48	319.82	14.04	203.00	203.00	200.83	184.00
	2515.000	950.00	30.00	95.60	247.79	3.83	203.39	208.57	202.74	199.19

*	2530.000	4490.00	15.00	57.09	329.36	13.63	203.00	203.00	201.40	188.30
	2530.000	950.00	15.00	91.16	230.08	4.13	203.15	210.47	202.74	199.22
	2712.000	4410.00	182.00	81.09	522.00	8.94	204.00	203.00	203.91	188.50
	2712.000	880.00	182.00	97.18	256.53	3.43	204.05	207.54	203.06	199.66
	3112.000	4410.00	400.00	81.76	488.20	9.47	205.40	204.00	204.41	189.40
	3112.000	880.00	400.00	147.50	252.03	3.78	203.52	211.62	203.75	200.62
	3513.000	4350.00	401.00	113.67	477.76	10.07	205.00	205.00	205.01	190.80
	3513.000	810.00	401.00	122.89	285.36	2.93	204.88	205.11	204.97	201.58
	3913.000	4350.00	400.00	45.06	395.42	11.00	205.80	206.00	205.66	191.30
	3913.000	810.00	400.00	183.98	401.34	2.13	204.74	211.42	205.61	202.40
*	4313.000	4350.00	400.00	189.00	856.56	7.68	205.00	207.00	207.56	192.60
	4313.000	810.00	400.00	188.99	437.48	1.67	213.50	204.85	206.04	203.50
	4713.000	3850.00	400.00	169.98	779.34	7.11	206.60	206.00	208.02	192.80
*	4713.000	740.00	400.00	169.97	332.40	1.92	212.59	204.76	206.51	204.46
	5113.000	3540.00	400.00	181.48	693.96	7.27	207.20	207.00	208.37	194.50
	5113.000	130.00	400.00	181.47	242.75	.45	214.92	206.06	206.97	205.42
	5513.000	3530.00	400.00	172.99	515.56	9.20	207.00	207.00	208.55	195.60
	5513.000	120.00	400.00	129.44	78.88	1.52	207.51	215.26	207.11	206.38
	5914.000	3530.00	401.00	153.77	447.17	9.30	208.00	208.00	209.17	196.60
	5914.000	120.00	401.00	116.02	90.93	1.32	208.73	216.77	208.31	207.34
	6156.000	3530.00	242.00	41.99	324.17	10.89	210.00	209.80	209.35	197.80
	6156.000	120.00	242.00	93.77	77.86	1.54	209.75	216.67	208.91	207.92
	6307.000	3530.00	151.00	154.99	445.02	11.49	209.75	210.10	211.57	198.75
	6307.000	120.00	151.00	44.39	46.60	2.58	210.38	219.67	209.47	208.29
	6388.000	3470.00	81.00	169.00	935.01	7.26	210.61	210.61	214.46	199.61
	6388.000	60.00	81.00	75.99	135.95	.44	210.12	217.48	209.47	207.48
	6517.000	3470.00	129.00	172.00	1043.40	4.98	211.30	211.50	214.85	200.00
	6517.000	60.00	129.00	74.38	120.76	.50	210.89	210.00	209.58	207.78
	6714.000	3470.00	197.00	198.50	1001.22	5.61	211.00	211.00	214.90	200.30
	6714.000	60.00	197.00	70.92	89.31	.67	211.00	210.91	209.61	208.24

1

	SECNO	Q	XLCH	TOPWID	AREA	VCH	XLBEL	RBEL	CWSEL	ELMIN
	7115.000	3330.00	401.00	195.50	862.77	5.94	213.00	212.00	215.05	200.60
	7115.000	20.00	401.00	64.62	35.95	.56	212.00	212.47	209.76	209.18
	7515.000	3310.00	400.00	197.99	783.42	6.30	213.00	213.00	215.26	200.90
	7515.000	20.00	400.00	62.04	15.58	1.28	213.13	213.14	210.38	210.12
	7715.000	3310.00	200.00	222.99	585.80	7.91	214.00	214.00	215.21	201.50
	7715.000	20.00	200.00	62.94	22.58	.89	214.31	214.18	211.34	210.97
*	7916.000	3310.00	201.00	38.75	298.14	11.10	216.00	215.00	214.90	202.10
*	7916.000	20.00	201.00	62.23	17.05	1.17	215.55	215.23	212.19	211.91
	8317.000	2300.00	401.00	41.86	334.08	6.88	219.00	217.00	216.95	203.00
*	8317.000	100.00	401.00	66.18	48.73	2.05	217.98	217.65	214.57	213.79

8717.000	2300.00	400.00	39.07	340.32	6.76	221.00	221.00	217.41	204.00
8717.000	100.00	400.00	66.87	54.49	1.84	220.19	229.10	216.52	215.66
8859.000	2300.00	142.00	38.61	324.36	7.09	221.00	222.00	217.51	204.60
8859.000	100.00	142.00	66.52	51.57	1.94	221.12	222.10	217.15	216.33
8977.000	2300.00	118.00	37.67	257.30	8.94	222.00	222.00	217.49	205.90
8977.000	100.00	118.00	66.64	52.55	1.90	221.86	231.63	217.71	216.88
9037.000	2270.00	60.00	137.99	651.64	4.13	222.60	222.50	223.86	206.49
9037.000	100.00	60.00	63.58	27.63	3.62	228.29	225.54	217.61	217.16
9118.000	2270.00	81.00	110.84	657.68	3.85	224.00	223.00	223.92	205.60
9118.000	100.00	81.00	67.31	58.18	1.72	228.10	231.23	218.45	217.54
* 9318.000	2270.00	200.00	38.99	364.20	6.23	225.00	225.00	223.77	206.40
9318.000	100.00	200.00	66.32	49.86	2.01	229.10	231.73	219.27	218.48
9518.000	1700.00	200.00	36.94	331.07	5.13	227.00	227.00	224.18	207.20
9518.000	100.00	200.00	73.47	55.23	1.81	229.55	232.90	220.26	219.41
9919.000	1700.00	401.00	41.09	279.63	6.08	228.00	230.00	224.46	212.20
9919.000	100.00	401.00	65.49	43.08	2.32	230.93	234.86	222.65	221.96
10119.000	1700.00	200.00	26.52	132.63	12.82	230.00	230.00	224.37	215.00
10119.000	100.00	200.00	65.49	43.06	2.32	232.45	235.33	224.39	223.70
* 10319.000	1700.00	200.00	29.55	138.12	12.31	232.00	232.80	227.27	217.80
10319.000	100.00	200.00	65.50	43.15	2.32	230.99	235.37	226.12	225.43
* 10720.000	1700.00	401.00	20.45	122.12	13.92	237.10	236.00	231.19	220.50
10720.000	100.00	401.00	65.48	43.02	2.32	232.72	239.73	229.59	228.91
11120.000	1700.00	400.00	33.33	223.43	7.61	241.00	240.00	235.38	222.00
11120.000	100.00	400.00	65.50	43.15	2.32	237.99	236.62	233.06	232.37

SECNO	Q	XLCH	TOPWID	AREA	VCH	XLBEL	RBEL	CWSEL	ELMIN
* 11408.000	1700.00	288.00	22.30	125.44	13.55	241.00	241.00	235.42	226.00
11408.000	100.00	288.00	65.48	43.00	2.33	242.03	239.58	235.56	234.87
11558.000	1700.00	150.00	20.00	154.12	11.03	243.00	243.00	237.65	229.22
11558.000	100.00	150.00	65.49	43.10	2.32	240.79	240.30	236.86	236.17
11690.000	1640.00	132.00	48.91	305.31	5.39	243.60	243.80	243.35	229.70
* 11690.000	100.00	132.00	63.60	27.84	3.59	244.18	250.69	237.76	237.31

SUMMARY OF ERRORS AND SPECIAL NOTES

CAUTION SECNO= .000 PROFILE= 1 CRITICAL DEPTH ASSUMED

UTION SECNO= 384.000 PROFILE= 1 CRITICAL DEPTH ASSUMED
CAUTION SECNO= 384.000 PROFILE= 1 MINIMUM SPECIFIC ENERGY
WARNING SECNO= 384.000 PROFILE= 2 CONVEYANCE CHANGE OUTSIDE ACCEPTABLE RANGE

Greiner

Greiner, Inc.

A Greiner Engineering, Inc. Company

Letter of Transmittal

☐ 4742 N. Oracle Road, Suite 310
Tucson, Arizona 85705
602 887-1800
FAX 602 887-8438

X 7310 N. 16th Street, Suite 160
Phoenix, Arizona 85020
602 275-5400
FAX 602 943-1891

To Don Rerick, P.E.
F.C.D. of M.C.

Date 9/15/94

Subject OCCC - Spillways & Repackaging

Reference # E002102

Attached please find:

3 Copies - Spillway analysis for hydraulic jump (21 pages)

3 Copies - Repackaging schedule, spreadsheets and Cost Summary

For
- X Review and approval or comment
- Signature and return
- Appropriate action
- X As requested
- For your information

Remarks Please have Raj call me if he has questions regarding the spillway calcs.

We are happy to be of service.
Sincerely yours,
Greiner, Inc.

By Vince Gilbert P.E.

Copy File

Rec'd
9/15/94
cc: RCS
File

PROJECT NAME: Old Cross Cut Canal

PROJECT NO. : E002102

SPILLWAY ANALYSIS FOR HYDRAULIC JUMP

LOCATION			(CFS) LOCAL STORM DISCHARGE (Q)	(FT) SPILLWAY WIDTH (4:1 EXP.)	(FT) ELEVATION DIFFERENCE TOP TO TOE (H)	(FT) UPSTREAM DEPTH (Y1)	(FPS) UPSTREAM APPROACH VELOCITY (V1)	(FT) SPILLWAY TOE DEPTH	(FPS) SPILLWAY TOE VELOCITY	(FT) SPILLWAY CONJUGATE DEPTH (Y4)	(FT) SPILLWAY CONJUGATE VELOCITY (V4)	(FPS) LOCAL Q CHIMP DEPTH (TW)	(FT) LENGTH OF JUMP			
STREET NAME	STATION BOX	STATION ROAD											TAILRACE (Lab)	JUMP (Lbc)	TOTAL	DEPRESSED BASIN TOTAL
HOLLY	27+17	216+41.93	142	132	3.8	0.74	3.94	0.06	17.44	1.05	1.03	1.10	0.0	6.6	7.0	–
S. CEMETARY*	33+57	222+82.59	229	48	3.3	0.71	9.96	0.26	18.45	2.21	2.16	1.55	45.2	7.9	54.0	14.0
N. CEMETARY*	40+57	229+81.63	239	64	2.1	0.79	6.88	0.25	14.84	1.69	2.16	1.49	15.0	8.3	24.0	11.0
VIRGINIA	50+25	238+49.37	570	149	1.1	1.14	4.96	0.31	12.2	1.55	2.46	2.40	0.0	13.8	14.0	–
WINDSOR	56+74	245+96.85	108	67	1.2	0.72	4.57	0.14	11.65	1.01	1.6	0.90	5.3	5.2	11.0	–
PINCHOT	71+37	260+61.58	38	105	0.7	0.63	2.19	0.04	9.39	0.44	0.83	0.75	0.0	4.6	5.0	–

* NOTE: N. Cemetary and S. Cemetary spillway locations are the only locations with a depressed basin to force a hydraulic jump.
N. CEMETARY – DEPRESS 0.8'
S. CEMETARY – DEPRESS 0.3'

COMPARISON OF HYDRAULIC JUMP ANALYSIS TO SCOUR ANALYSIS

LOCATION	(FT) HYDRAULIC JUMP LENGTH	(FT) SCOUR LENGTH
HOLLY	7	50
S. CEMETARY*	14	29
N. CEMETARY*	11	21
VIRGINIA	14	68
WINDSOR	11	41
PINCHOT	5	27

HYDRAULIC JUMP CALCULATION

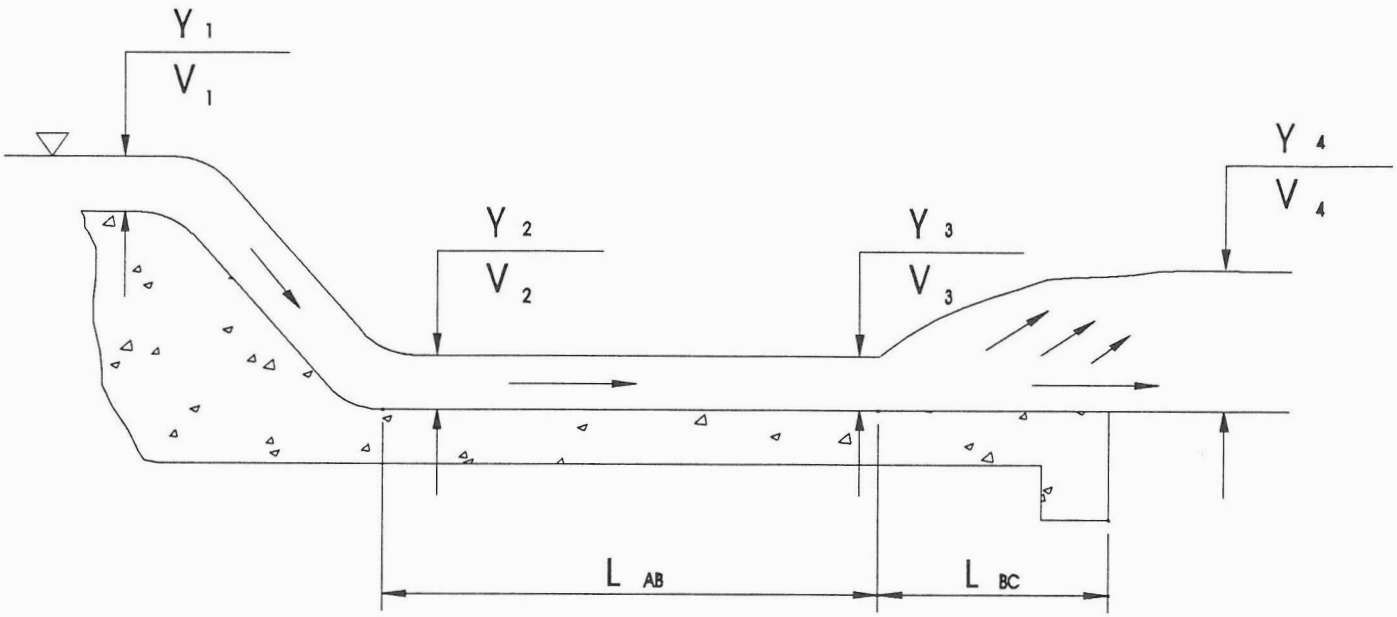

FIGURE 1.1 - HYDRAULIC JUMP

PROJECT NAME:	OLD CROSS CUT CANAL
PROJECT NUMBER:	E002102
DATE CREATED:	9/3/94
ENGINEER/DESIGNER:	J.E.B.

LOCATION: HOLLY

Q=	142	Yc=	0.330374
W=	132	Y3=	
TW =	1.1	V3=	
Y4=	1.05	R3=	
V4=	1.03	F2=	12.5
Y2=	0.06	Vave.=	
V2=	17.44	Rave.=	
R2=	0.059946	Segl=	
N=	0.014		
L/Y4=	6.02	Lab=	NO TAILRACE
		Lbc=	6.62

APRON LENGTH= 6.62

NOTE:
THE VALUE FOR L/Y4 MUST COME FROM THE U.S. BUREAU OF RECLAMATION CHART

HYDRAULIC JUMP CALCULATION

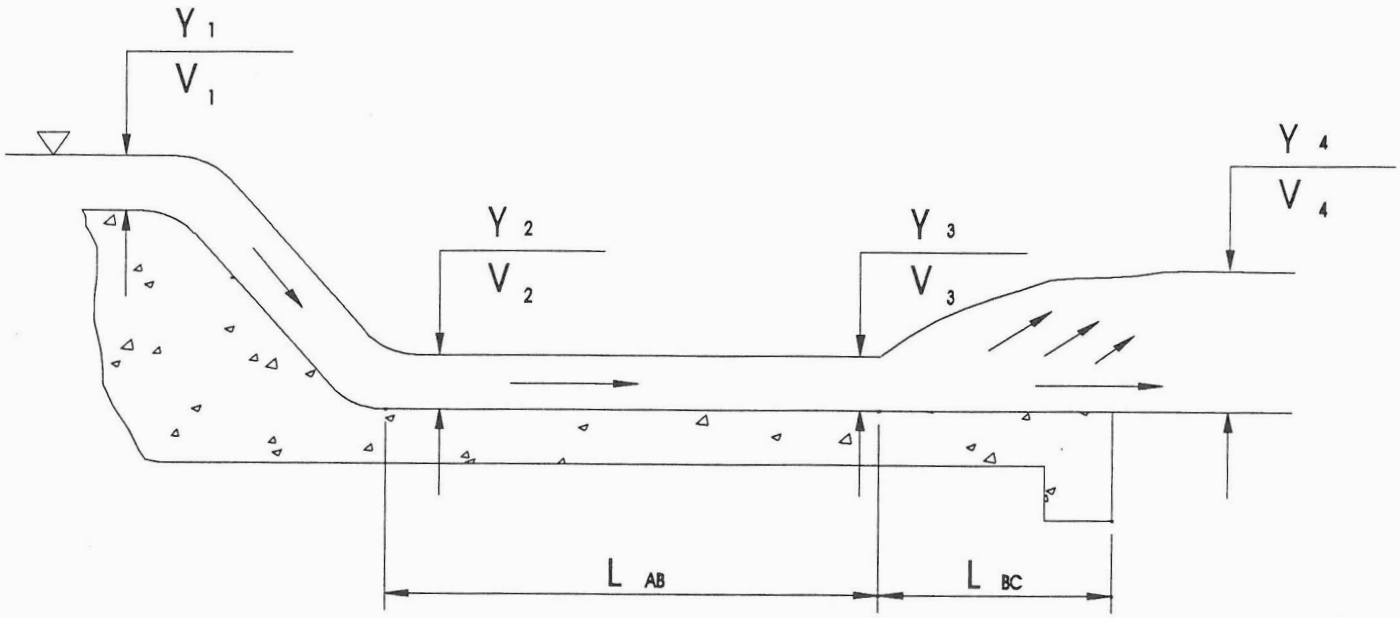

FIGURE 1.1 - HYDRAULIC JUMP

PROJECT NAME:	OLD CROSS CUT CANAL
PROJECT NUMBER:	E002102
DATE CREATED:	9/3/94
ENGINEER/DESIGNER:	J.E.B.

LOCATION: S. CEMETARY

Q=	229	Yc=	0.890898
W=	48	Y3=	0.454919
TW =	1.55	V3=	10.48721
Y4=	2.21	R3=	0.446456
V4=	2.16	F3=	2.740092
Y2=	0.26	Vave.=	14.46861
V2=	18.45	Rave.=	0.351835
R2=	0.257214	Segl=	0.074861
N=	0.014		
L/Y4=	5.1	Lab=	45.191
		Lbc=	7.905

APRON LENGTH= 53.096

NOTE:
THE VALUE FOR L/Y4 MUST COME FROM THE U.S. BUREAU OF RECLAMATION CHART

HYDRAULIC JUMP CALCULATION

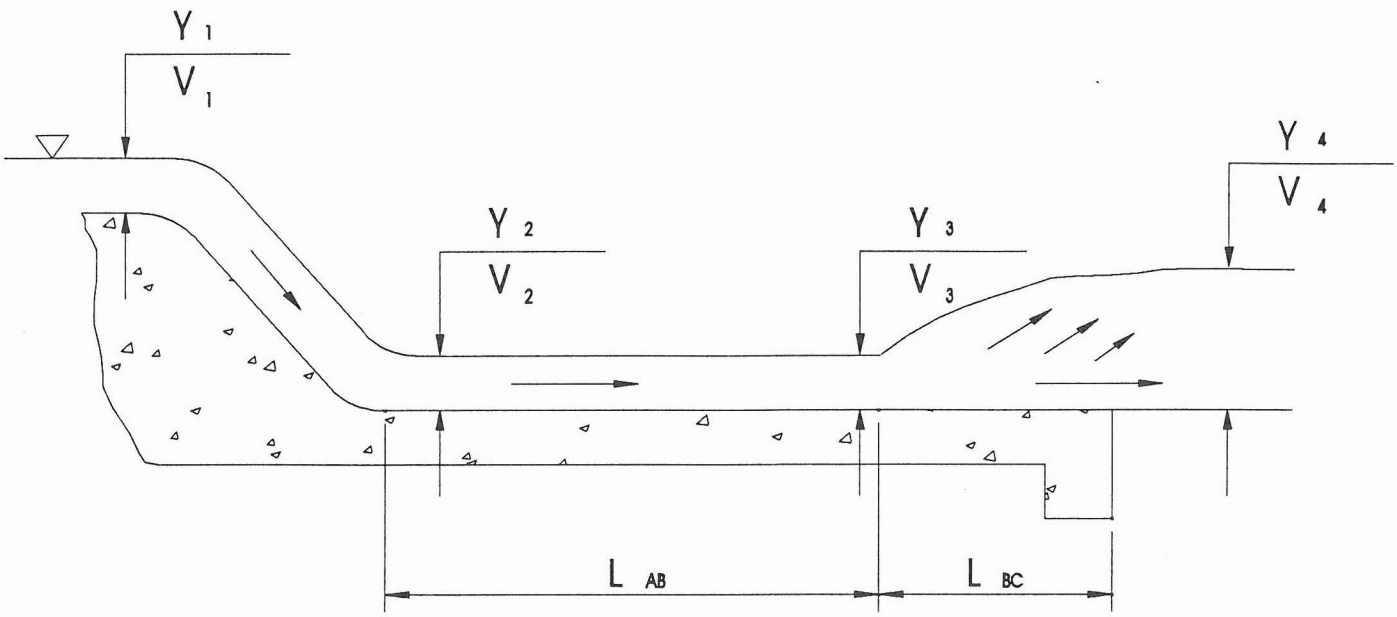

FIGURE 1.1 - HYDRAULIC JUMP

PROJECT NAME:	OLD CROSS CUT CANAL
PROJECT NUMBER:	E002102
DATE CREATED:	9/3/94
ENGINEER/DESIGNER:	J.E.B.

LOCATION: N. CEMETARY

Q=	239	Yc=	0.7568
W=	64	Y3=	0.321
TW =	1.49	V3=	11.63356
Y4=	1.69	R3=	0.317812
V4=	2.1593	F3=	3.6
Y2=	0.2517	Vave.=	13.23623
V2=	14.8389	Rave.=	0.283774
R2=	0.249736	Segl=	0.083461
N=	0.014		
L/Y4=	5.6	Lab=	14.96
		Lbc=	8.34

APRON LENGTH= 23.30

NOTE:
THE VALUE FOR L/Y4 MUST COME FROM THE U.S. BUREAU OF RECLAMATION CHART

HYDRAULIC JUMP CALCULATION

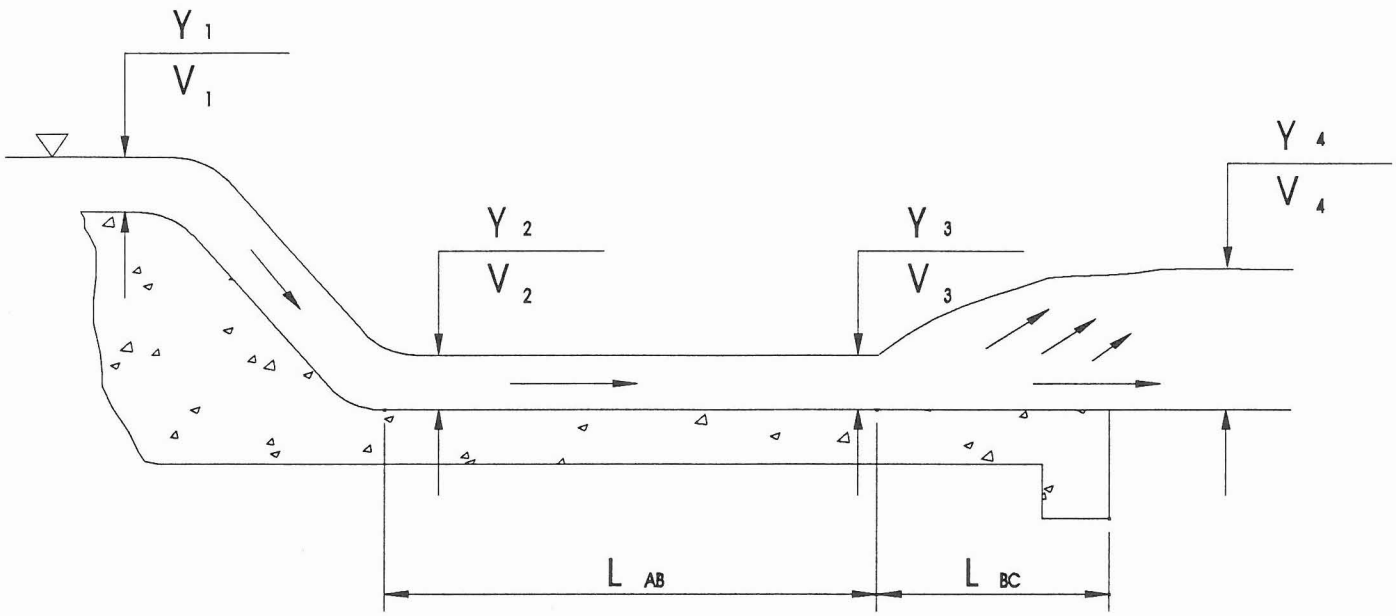

FIGURE 1.1 - HYDRAULIC JUMP

PROJECT NAME:	OLD CROSS CUT CANAL
PROJECT NUMBER:	E002102
DATE CREATED:	9/3/94
ENGINEER/DESIGNER:	J.E.B.

LOCATION: VIRGINIA

Q=	570	Yc=	0.76905
W=	149	Y3=	0
TW =	2.4	V3=	0
Y4=	1.55	R3=	0
V4=	2.46	F2=	3.861456
Y2=	0.31	Vave.=	0
V2=	12.2	Rave.=	0
R2=	0.308715	Segl=	0
N=	0.014		
L/Y4=	5.75	Lab=	NO TAILRACE
		Lbc=	13.8

APRON LENGTH= 13.8

NOTE:
THE VALUE FOR L/Y4 MUST COME FROM THE U.S. BUREAU OF RECLAMATION CHART

HYDRAULIC JUMP CALCULATION

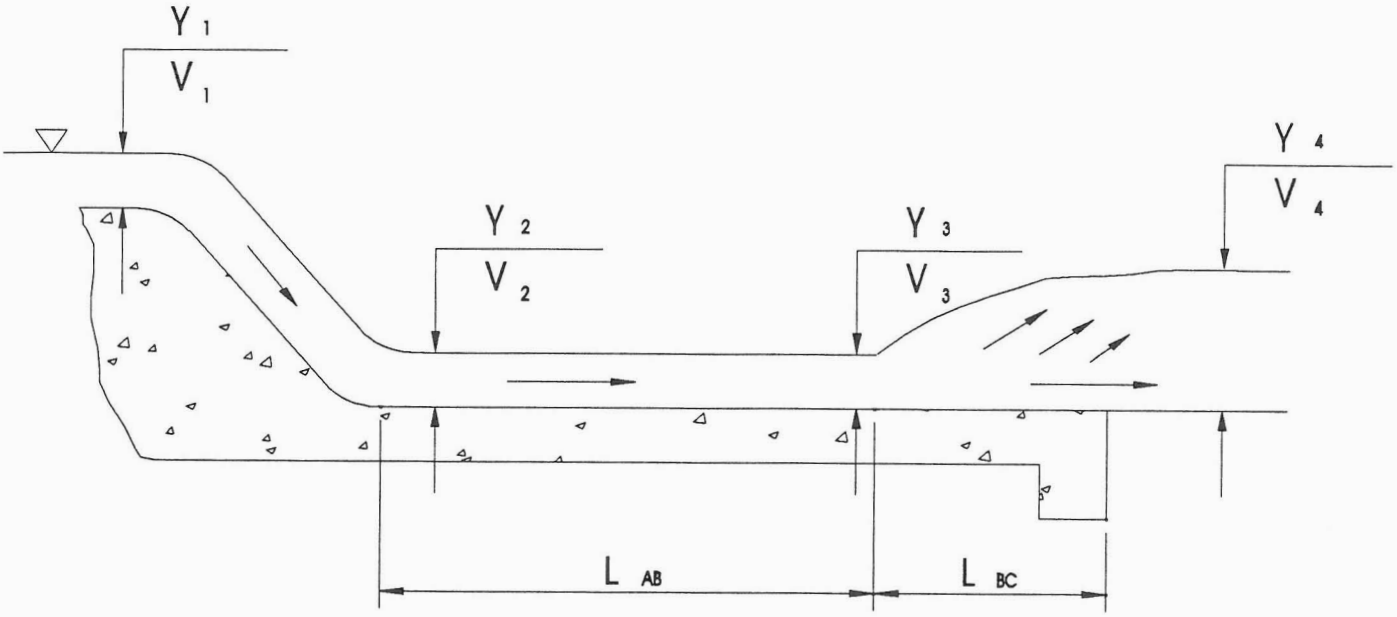

FIGURE 1.1 - HYDRAULIC JUMP

PROJECT NAME:	OLD CROSS CUT CANAL
PROJECT NUMBER:	E002102
DATE CREATED:	9/3/94
ENGINEER/DESIGNER:	J.E.B.

LOCATION: WINDSOR

Q=	108	Yc=	0.432492
W=	67	Y3=	0.167916
TW =	0.9	V3=	9.599676
Y4=	1.01	R3=	0.167079
V4=	1.6	F3=	4.1
Y2=	0.14	Vave.=	10.62484
V2=	11.65	Rave.=	0.153248
R2=	0.139417	Segl=	0.122334
N=	0.014		
L/Y4=	5.8	Lab=	5.30
		Lbc=	5.22

APRON LENGTH= 10.52

NOTE:
THE VALUE FOR L/Y4 MUST COME FROM THE U.S. BUREAU OF RECLAMATION CHART

HYDRAULIC JUMP CALCULATION

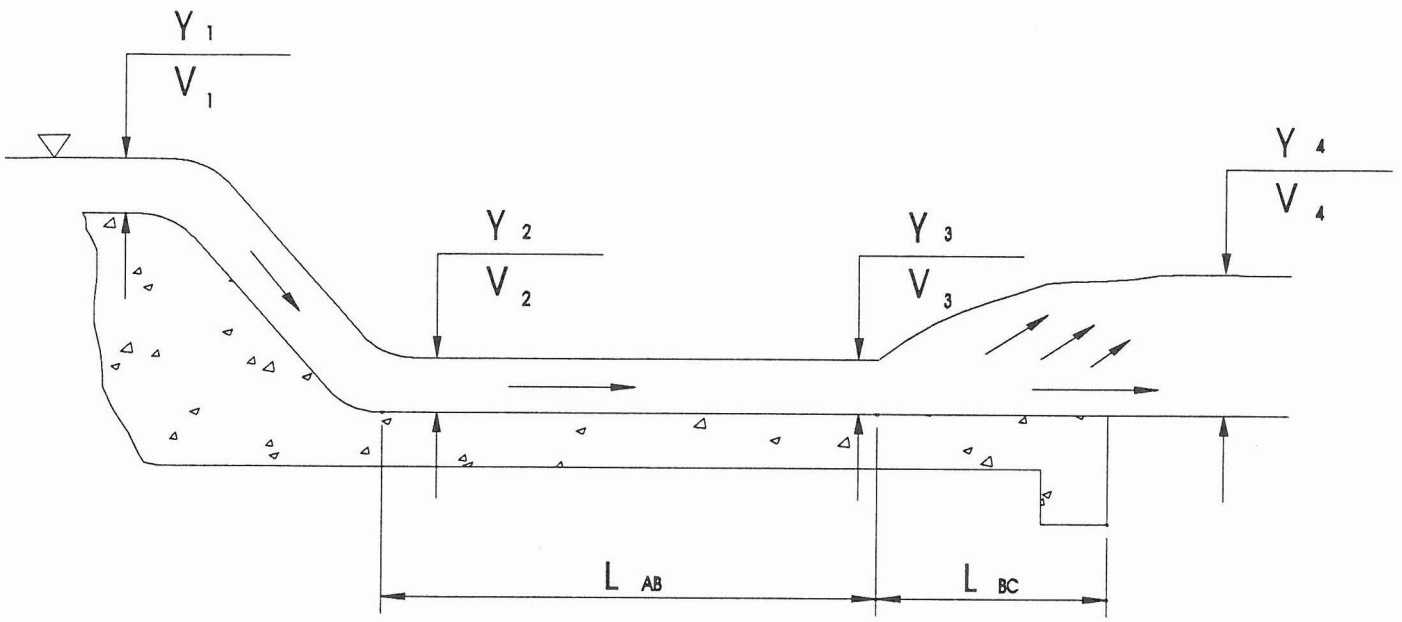

FIGURE 1.1 - HYDRAULIC JUMP

PROJECT NAME:	OLD CROSS CUT CANAL
PROJECT NUMBER:	E002102
DATE CREATED:	9/3/94
ENGINEER/DESIGNER:	J.E.B.

LOCATION: PINCHOT

Q=	38	Yc=	0.159922
W=	105	Y3=	
TW =	0.75	V3=	
Y4=	0.44	R3=	
V4=	0.83	F2=	8.3
Y2=	0.04	Vave.=	
V2=	9.39	Rave.=	
R2=	0.03997	Segl=	
N=	0.014		
L/Y4=	6.17	Lab=	NO TAILRACE
		Lbc=	4.63

APRON LENGTH= 4.63

NOTE:
THE VALUE FOR L/Y4 MUST COME FROM THE U.S. BUREAU OF RECLAMATION CHART

Greiner

Job No. E002102 Project OCCC - Spillways Sheet 1 of 2

Subject Hydraulic Jump Calcs

By JVG Date 9/2/94 Checked By RHF/WCT Date 9-6-94

South Cemetery Entrance

Ref: Hydraulics Third E
Andrew L Simon
Pg 380-385,
HEC-14-Sept

Calc. Length of Jump and tailrace

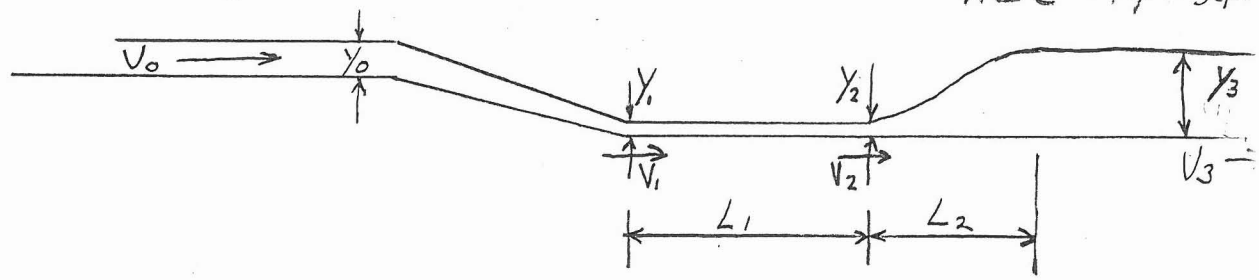

y_3 = Sequent depth; 1) When tailwater in Chimp $\geq y_3$, $L_1 = 0$
2.) When " " " $< y_3$ use the tailwater depth for y_3

Previously Calculated: $y_o = 0.71'$, $y_1 = 0.26'$ Tailwater depth = 1.55'
$V_o = 9.96$ fps, $V_1 = 18.45$ fps $y_3 = 2.21' > 1.55'$
Use $y_3 = 1.55'$
(Req. Sequent Depth)

Spillway Width = 48'
Q = 229 CFS (Local Storm)
Assume - retangular channel

$$* \quad \frac{y_3}{y_2} = \frac{1}{2}\left(\sqrt{1+8(F_2)^2} - 1\right)$$

Ref: Hydraulic Design of Stilling Basins and Energy Dissipators, U.S. Bureau Of Reclamation (BOR) Pg 6 & 7 (Jan 197

$$y_3 = \frac{1}{2}\left(\sqrt{1+8(F_2)^2} - 1\right) y_2$$

$$F_2 = \frac{V_2}{\sqrt{g y_2}} = \frac{Q/A}{\sqrt{g y_2}} = \frac{229/y_2 \times 48'}{\sqrt{32.2}\ \sqrt{y_2}}$$

$$= \frac{4.77/y_2}{5.67 (y_2)^{\frac{1}{2}}} = \left(\frac{4.77}{y_2}\right)\left(\frac{1}{5.67 (y_2)^{\frac{1}{2}}}\right)$$

$$= \frac{4.77}{5.67 (y_2)^{1.5}} = \frac{0.84}{(y_2)^{1.5}}$$

$$1.55 = \frac{1}{2}\left(\sqrt{1+(8)\left(\frac{0.84}{(y_2)^{1.5}}\right)^2} - 1\right) y_2$$

By Itteration

$y_2 = 0.45'$

$$V_2 = \frac{229 \text{ CFS}}{(0.45)(48')} = 10.60 \text{ fps}$$

$$R_2 = \frac{(0.45)(48)}{48 + (2)(.45)} = 0.45$$

$y_1 = 0.26$ $V_1 = 18.45$ fps

$$R_1 = \frac{(0.26)(48)}{48 + (2)(.26)} = 0.26$$

$$R_{AVE} = \frac{0.45 + 0.26}{2} = 0.35'$$

$$V_{AVE} = \frac{10.60 - 18.45}{2} \quad 14.53 \text{ fps}$$

* See Sheet 2 for check Calc Equation

Greiner

Job No. E002102 Project OCCC - Spillways Sheet 2 of 2

Subject Hydraulic Jump Calcs

By JVG Date 9/2/94 Checked By RHF / WCT Date 9-6-94

$$S_{ave} = \left[\frac{14.53 \text{ fps}}{(0.35)^{2/3}} \times \frac{0.014}{1.486}\right]^2 = 0.07597$$ (Mannings $n = 0.014$) "friction slope"

$$\text{(tailrace) } L_1 = \frac{\left(\frac{V_2^2}{2g} + Y_2\right) - \left(\frac{V_1^2}{2g} + Y_1\right)}{(S_o - S_{Ave})} = \frac{\left(\frac{(10.60)^2}{64.4} + 0.45\right) - \left(\frac{(18.45)^2}{64.4} + 0.2\right)}{(0 - 0.07597)}$$

$$L_1 = \frac{2.195 - 5.546}{-0.07597} = \underline{\underline{44.11 \text{ feet}}}$$

$$F_2 = \frac{10.60}{\sqrt{(32.2)\ 0.45}} = 2.78$$

$$\frac{L_2}{Y_2} = 17.1 \xrightarrow{\text{Figure 6 (BOR) pg 13}} L_2 = 7.87 \approx \boxed{7.9}$$

$$\frac{L_2}{Y_3} = 5.05 \xrightarrow{\text{Figure 7 (BOR) pg. 14}} L_2 = 7.83 \approx \boxed{7.9'}$$

$$L_{Total} = L_1 + L_2 = 44.1' + 7.9' = \boxed{52'} \approx 53.096' \checkmark$$ (Checks w/ spreadsheet)

* Check Y_3 Calc. using different Equation

$q = 229 \text{ CFS}/48 = 4.77$

$$\frac{q^2}{g} = \frac{1}{2} Y_2 Y_3 (Y_2 + Y_3)$$

$$\frac{(4.77)^2}{32.2} = \frac{1}{2} Y_2\ 1.55\ (Y_2 + 1.55)$$

$$0.912 = Y_2\ (Y_2 + 1.55)$$

$$Y_2 = 0.45 \quad \text{checks } \underline{\text{OK}}$$

opening. The extreme case involved a discharge of 0.14 c.f.s. and a value of D_1 of 0.032 foot, for $F_1=8.9$, which is much smaller than any discharge or value of D_1 used in the present experiments. Thus, it is reasoned that as the gate opening decreased, in the 6-inch-wide flume, frictional resistance in the channel downstream increased out of proportion to that which would have occurred in a larger flume or a prototype structure. Thus, the jump formed in a shorter length than it should. In laboratory language, this is known as "scale effect," and is construed to mean that prototype action is not faithfully reproduced. It is quite certain that this was the case for the major portion of curve 1. In fact, Bahkmeteff and Matzke were somewhat dubious concerning the small-scale experiments.

To confirm the above conclusion, it was found that results from Flume F, which was 1 foot wide, became erratic when the value of D_1 approached 0.10. Figures 6 and 7 show three points obtained with a value of D_1 of approximately 0.085. The three points are given the symbol ⊠ and fall short of the recommended curve.

The two remaining curves, labeled "3" and "4," on Figure 7, portray the same trend as the recommended curve. The criterion used by each experimenter for judging the length of the jump is undoubtedly responsible for the displacement. The curve labeled "3" was obtained at the Technical University of Berlin on a flume ½ meter wide by 10 meters long. The curve labeled "4" was determined from experiments performed at

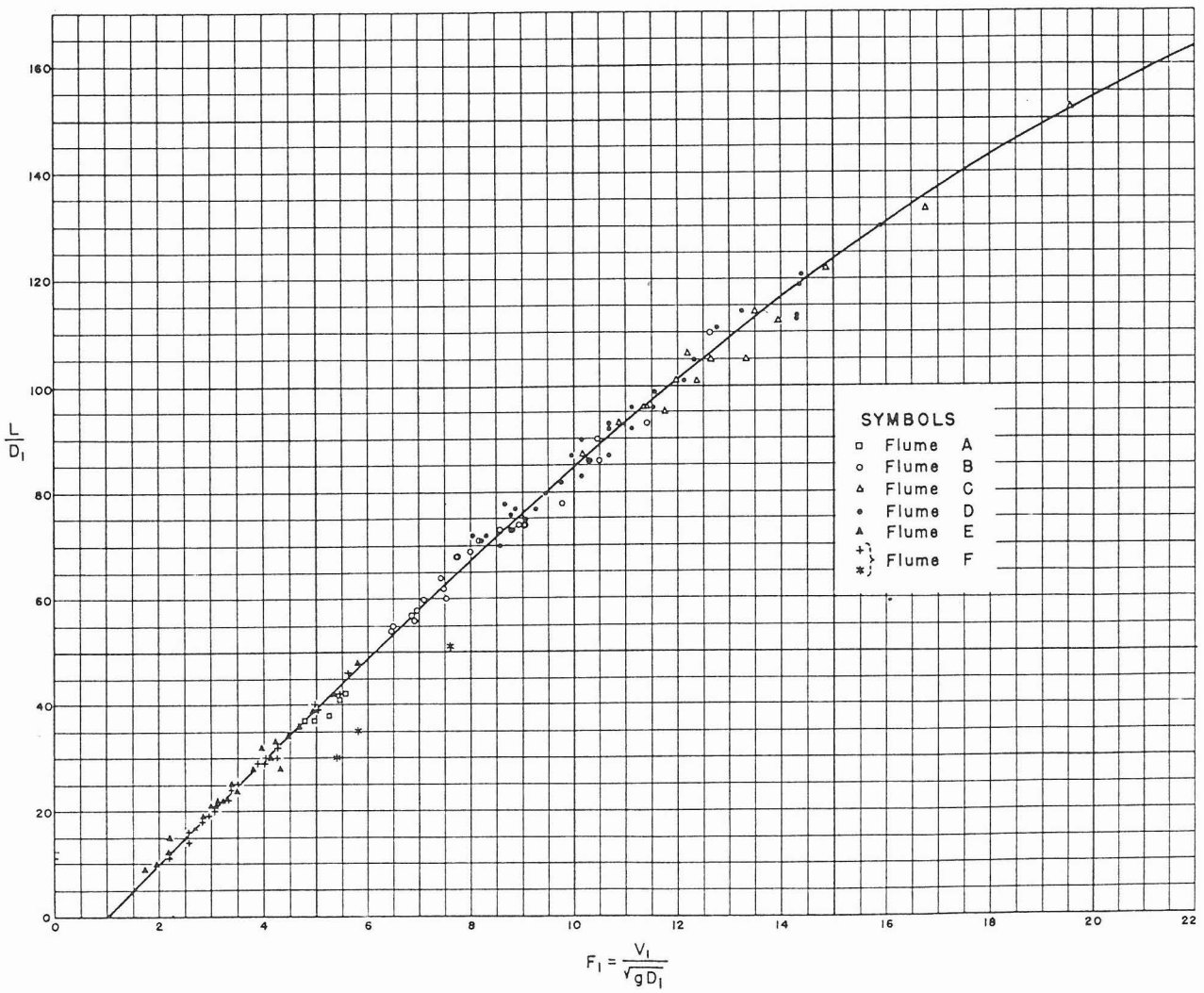

FIGURE 6.—*Length of jump in terms of D_1 (Basin I).*

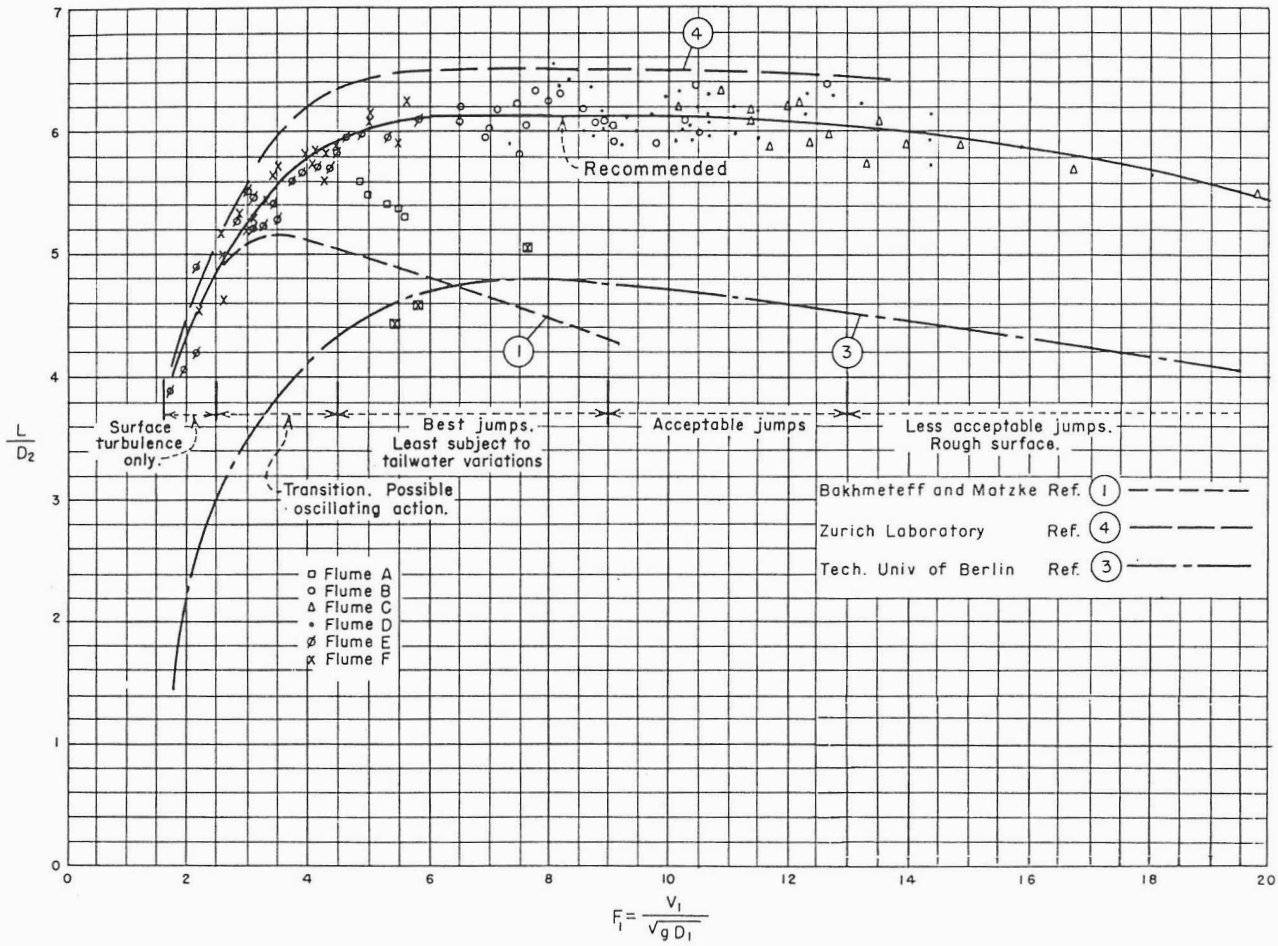

FIGURE 7.—*Length of jump in terms of D_2 (Basin I).*

the Federal Institute of Technology, Zurich, Switzerland, on a flume 0.6 of a meter wide and 7 meters long. The curve numbers are the same as the reference numbers in the "Bibliography" which refer to the work.

As can be observed from Figure 7, the test results from Flumes B, C, D, E, and F plot sufficiently well to establish a single curve. The five points from Flume A, denoted by squares, appear somewhat erratic and plot to the right of the general curve. Henceforth, reference to Figure 7 will concern only the recommended curve, which is considered applicable for general use.

Energy Absorption in Jump

With the experimental information available, the energy absorbed in the jump may be computed. Columns 14 through 18, Table 1, list the computations, and the symbols may be defined by consulting the specific energy diagram in Figure 4. Column 14 lists the total energy, E_1, entering the jump at Section 1 for each test. This is simply the depth of flow, D_1, plus the velocity head computed at the point of measurement. The energy leaving the jump, which is the depth of flow plus the velocity head at Section 2, is tabulated in Column 15. The differences in the values of Columns 14 and 15 constitute the loss of energy, in feet of water, attributed to the conversion, Column 16. Column 18 lists the percentage of energy lost in the jump, E_L, to the total energy entering the jump, E_1. This percentage is plotted with respect to the Froude number and is shown as the curve to the left on Figure 8. For a Froude number of 2.0, which would correspond to a relatively thick jet entering the jump at low velocity, the curve shows the

crest. Since X_1, the inside nappe surface, is less than the position of the spillway, it is shown that the spillway is supporting the nappe to some extent.

For a complete spillway design similar values may be computed for other depths below the crest. The position of the outer nappe surface is required in the judicious design of the required side walls bordering the spillway.

ENERGY DISSIPATORS

The velocity of the flow at the toe of the spillway may be computed by

$$v_1 = \sqrt{2g(P + H - y_1)} \tag{9.12}$$

where P is the crest height, H is the head over the weir including the kinetic energy head, and y_1 is the depth of the nappe at the toe. This velocity is usually of considerable magnitude. Hence, it results in a large amount of kinetic energy capable of causing heavy scouring. The situation is identical in the case of flow under a gate when the downstream water elevation is low or in the case of a culvert exit. In order to avoid a gradual erosion of the downstream channel and the possible destruction of the structure itself, the excess energy must be dissipated. Assuming that the downstream channel is resistant to scouring and that it is of a near horizontal slope of constant cross section and, furthermore, that no particular effort is made to dissipate the energy of the water leaving the spillway, the following would occur: The flow would shoot out with an initial velocity according to Equation 9.12 in the channel (called apron or tailrace) losing its energy gradually because of channel friction. Since this flow is supercritical, its energy loss rate would be considerable, resulting in a gradual decrease of velocity and a corresponding increase in depth. The flow could be computed with reasonable accuracy by using the Chézy equation although the flow profile is somewhat curved, being a type of backwater curve. Applying Equation 8.13 and knowing the roughness coefficient, we may determine the rate of energy loss. As the depth of flow increases, the flow will reach a level at which the given discharge Q may flow in the given channel, defined by its slope S and roughness n, either at supercritical or subcritical velocity, according to the concepts depicted in Figures 8.1 and 8.2. The corresponding depths involved here are the conjugate depths. By the law of minimum energy, discussed in Chapter 2, Nature will select the flow condition at which the rate of energy loss is less; that is, the flow will become a subcritical flow. For this reason a hydraulic jump must occur. The energy loss associated with the hydraulic jump is computed from Equation 8.10.

If for a given discharge the downstream channel slope is mild, the

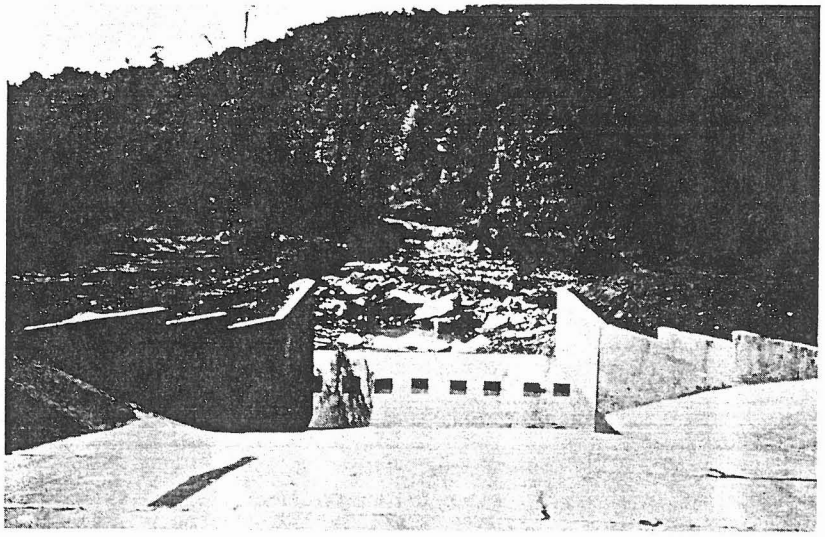

Spillway looking downstream with energy dissipator block to create a hydraulic jump. The structure replaced one that failed. (Courtesy of Ohio Department of Natural Resources)

downstream water level may be assumed to be of normal depth. As shown in Figure 9.16, this will define the downstream total energy content of the flow after the jump and in turn will control the location of the jump. Starting from this control point toward the upstream direction, one can make the

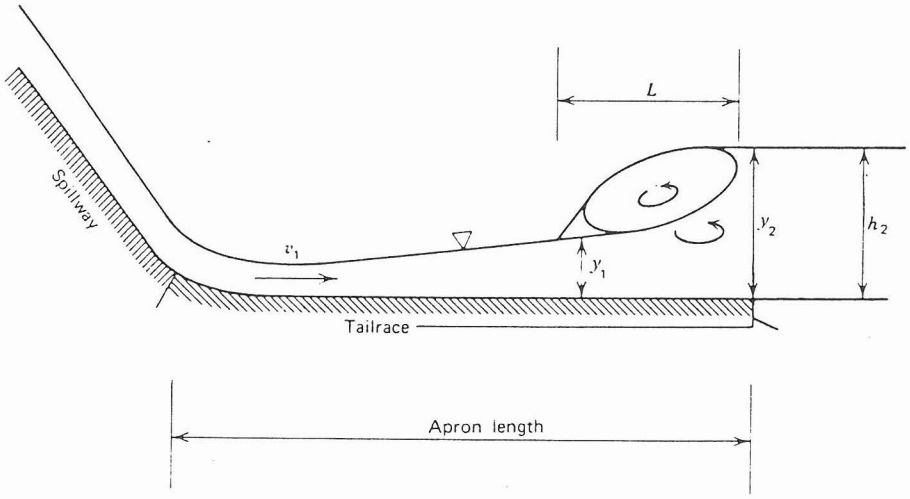

FIGURE 9.16 Notations for a hydraulic jump below a spillway.

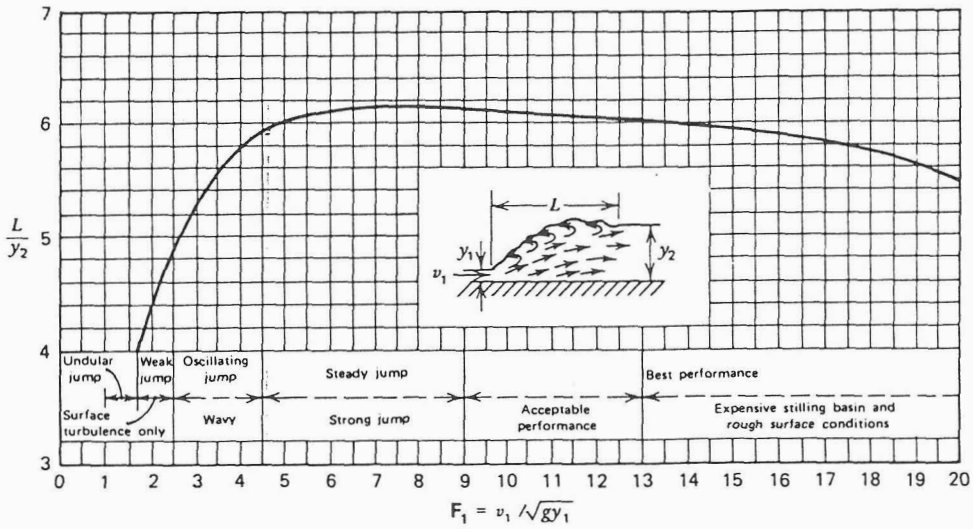

FIGURE 9.17 Ranges of various types of hydraulic jumps. (Courtesy of Bureau of Reclamation)

following conclusions: At the control point the depth of the tail water y_2 equals the subcritical conjugate depth. At the beginning of the jump the depth is then y_1. The length of the jump may be determined by the data plotted in Figure 9.17. The information given in Figure 9.17 is based on experimental data obtained by the U.S. Bureau of Reclamation. With d_1 and Q known, the Froude number at the beginning of the jump may be computed. The remaining uncertainty concerns the distance between the toe of the spillway (or the location of a gate) and the beginning of the jump. The magnitude of this distance is very sensitive to the roughness of the channel. As the construction cost of downstream aprons depend on their required length, designers should strive to minimize this length. This necessitates that the jump be localized by absorbing the excess energy in the supercritical flow, causing the jump to occur as close to the structure as possible. This end is served by the design and construction of energy dissipators.

Example 9.14

A 12-ft wide spillway delivers a discharge of 250 cfs such that the depth of the water at the toe of the spillway is 1 to 2 ft, and the depth of the downstream water is 4 ft (Figure E9.14). Determine the required size of the downstream apron.

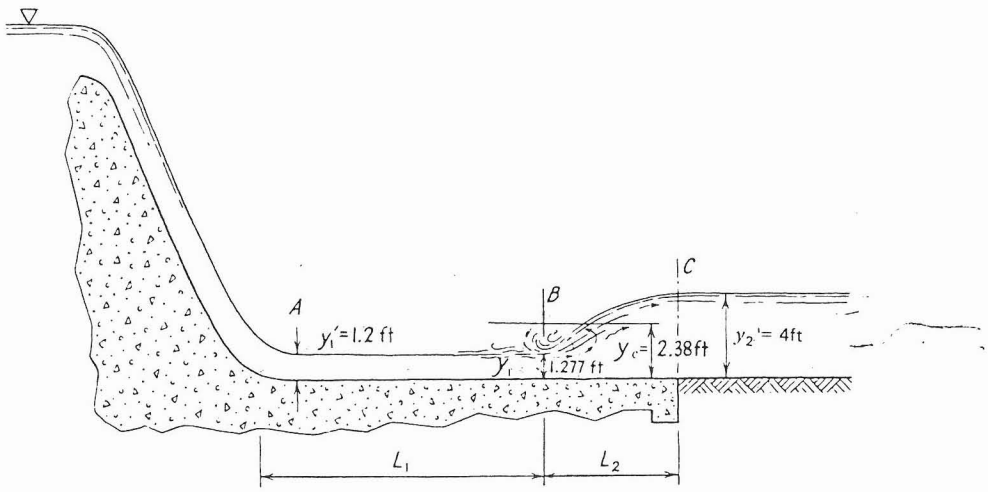

FIGURE E9.14

Solution

Assume that the spillway is rectangular and identical throughout the apron. From $Q = 250$ cfs, therefore, the critical depth y_c can be calculated. The discharge per unit width $= 250/12 = 20.83$ cfs/ft. Then,

$$y_c = \left[\frac{q^2}{g}\right]^{1/3} = \left[\frac{(20.83)^2}{32.2}\right]^{1/3} = 2.38 \text{ ft}$$

To find the conjugate depth of $y_2 = 4$ ft, we see that

$$\frac{q^2}{g} = \frac{1}{2} y_1 y_2 (y_1 + y_2)$$

$$= \frac{(20.83)^2}{32.2} = \frac{1}{2}(y_1)4(y_1 + 4)$$

$$y_1 = 1.28 \text{ ft}$$

Thus, at point B, right in front of the jump the velocity is

$$v_1 = \frac{250}{(12)1.28} = 16.3 \text{ fps}$$

The hydraulic radius

$$R_1 = \frac{12 \times 1.28}{12 + 2 \times 1.28} = 1.05 \text{ ft}$$

At point A, the beginning of the apron $y'_1 = 1.2$ ft and

$$v'_1 = \frac{250}{12 \times 1.2} = 17.4 \text{ fps} \qquad R'_1 = \frac{12 \times 1.2}{12 + 2 \times 1.2} = 1 \text{ ft}$$

The average velocity between A and B

$$v_{\text{ave}} = (17.36 + 16.3)/2 = 16.8 \text{ fps}$$

and

$$R_{\text{ave}} = \frac{1 + 1.05}{2} = 1.03 \text{ ft}$$

Now to find the slope of the energy grade line S slope, we assume that the friction coefficient of the apron is $n = 0.014$ and then write Equation 8.19 as

$$v = \frac{Q}{A} = \frac{1.49R^{2/3}}{n} S^{1/2}$$

$$16.8 = \frac{1.49}{0.014} (1.03)^{2/3} S^{1/2}$$

$$S = \left[\frac{16.8}{(1.03)^{2/3}} \times \frac{0.014}{1.49}\right]^2 = 0.024$$

Hence, the length of the tailrace before the jump is

$$(S_0 - S)L_{AB} = \left(\frac{v_1^2}{2g} + y_1\right) - \left(\frac{v_1'^2}{2g} + y'_1\right)$$

$$= \left[\frac{(16.3)^2}{2 \times 32.2} + 1.28\right] - \left[\frac{(17.4)^2}{2 \times 32.2} + 1.28\right]$$

$$L_{AB} = \frac{5.41 - 5.88}{0 - 0.024} = \frac{-0.47}{-0.024} = 19.6 \text{ ft}$$

The Froude number at B,

$$\mathbf{F}_1 = \frac{v_1}{\sqrt{gy_1}} = \frac{16.3}{\sqrt{32.2 \times 1.28}} = 2.54$$

From Figure 9.17 the length of the jump $L_{BC} = 4.9 \times 4 = 19.6$ ft. Then, the total apron length $= 19.6 + 19.6 = 39.2$ ft.

A great many different energy dissipators have been built at various types of hydraulic structures. Reports on experimental studies and design recommendations are abundant in the hydraulic literature. Standard designs of energy dissipators used by agencies of the U.S. government exist.

A typical standard design, incorporating several basic energy-absorbing features, is the U.S. Bureau of Reclamation's Type III basin, which will be reviewed here as an example of an efficient energy dissipator. The design was developed for relatively small structures with a configuration shown in Figure 9.18. The size of the energy dissipator components of this stilling basin is shown in Figure 9.19 as a function of the Froude number and conjugate depth at the beginning (supercritical portion) of the hydraulic jump. The length of the basin, L, is recommended to be about $2.8d_2$ where d_2 is the subcritical conjugate depth of the jump. This design confines the hydraulic jump within the length of the basin. It also tends to shorten the length of the hydraulic jump by about 50 percent.

It is recommended that the channel below any energy dissipator be protected against erosive currents by crushed stone riprap. The necessary stone size as a function of the expected erosion velocity is presented in Figure 9.20. The data are based on actual field experiences by the U.S. Bureau of Reclamation. The riprap should be composed of a well-graded mixture, but most of the stones should be of the size indicated by the curve. Riprap should be placed over a filter blanket, a protected filter cloth, or a bedding of graded gravel in a layer 1.5 times or more as thick as the largest stone diameter. The curve shows the minimum stone sizes necessary to resist movement. Erosion control in a riprap-covered channel section following an energy dissipator may be further improved by allowing the channel to flare out to a size several times its normal width.

Example 9.15

Determine the required stone size of the riprap to be placed after the apron designed in Example 9.14.

Solution

Assuming that the velocity immediately below the hydraulic jump is uniform, and computing this value from

$$Q = 250 \text{ cfs}$$

$$\text{depth} = 4 \text{ ft}$$

$$\text{width} = 12 \text{ ft}$$

$$v_{\text{ave}} = \frac{250}{4(12)} = 5.21 \frac{\text{ft}}{\text{sec}}$$

Using Figure 9.20 with $V = 5.21$ fps, we find that the required stone diameter is 4 in.

Greiner

Job No. F002102 Project OCCC Sheet 1 of 2

Subject Normal Depth Flow in CHIMP - LOCAL STORM

By JUG Date 9/1/94 Checked By RHF / WCT Date 9-6-94

(Using Mannings Equation $Q = \frac{1.486}{n} A R^{2/3} S^{1/2}$

PINCHOT (STA 71+00 ±)

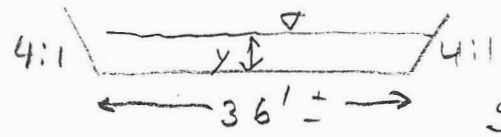

Q Local = 38 CFS

$S = 0.0024$ ft/ft

$n = 0.045$

$R = \frac{(b+zy)y}{b+2y\sqrt{1+z^2}}$

$A = (b+zy)y$

$y = 0.76'$ OK
(Tailwater depth Typ.)

A = 29.71

R = 29.72 / 41.84 = 0.71

S Cemetary (33+00 or 34+00)

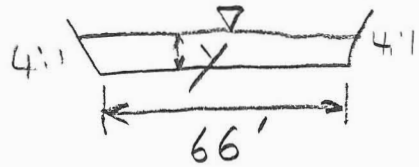

Q Local = 229 CFS

$S = 0.0024'$

$n = 0.045$

$y = 1.55'$ OK

A = 111.91

R = 111.91 / 76.[illegible] = 1.43

N. Cemetary (40+00 or 41+00)

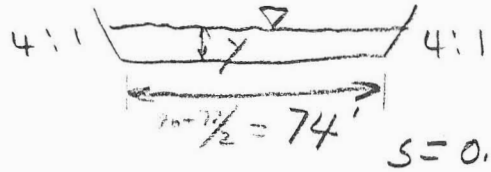

Q local = 239

$S = 0.0024'$

$n = 0.045$

$y = 1.49$ ft.

A = 117.14

R = 117.14 / 85.[illegible] = 1.39

Greiner

Job No. E002102 Project OCCC Sheet 2 of 2

Subject Normal Depth of Flow in CHIMP - Local Storm

By JVG Date 9/1/94 Checked By RHF/WCT Date 9-6-94

Virginia (STA 50+00)

Q = 547 CFS

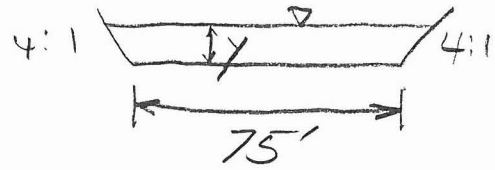

S = 0.002
n = 0.045

y = 2.40' OK

A = 203.0

$R = \frac{203.0}{93.59} = 2.17$

Windsor (Sta 57+00)

Q = 108 CFS

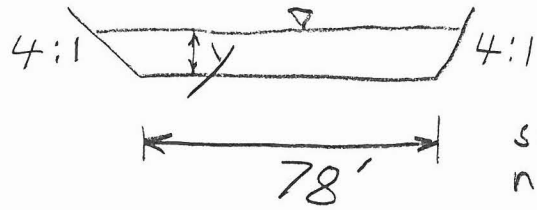

S = 0.0024
n = 0.045

y = 0.90' OK

A = 73.44

$R = \frac{73.44}{84.97} = 0.86$

Holly (Sta. 27+00 ±)

Q = 142 CFS

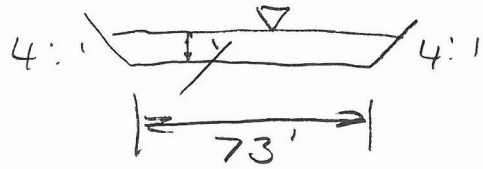

S = 0.002
n = 0.045

y = 1.10' OK

A = 85.14

$R = \frac{85.14}{81.52} = 1.04$

Greiner

Job No. E002102 Project Old Cross Cut Canal Sheet 1 of 2

Subject Depressed Basin Design for Spillways

By RHF Date 9-6-94 Checked By JG Date 9/6/94

Purpose: At locations where the tailwater is not sufficiently deep to cause an hydraulic jump to occure (tailwater < conjugate depth), depress the spillway invert below existing chimp invert so that the elevation of the conjugate depth is equal to the elevation of the flow of the local storm in the CHIMP. This causes a hydraulic jump. The length of the horizo apron shall equal the length of the hydraulic ju

Procedure: Subtract the tailwater depth from the conjugate depth. using the CHIMP side slope and the depth difference, compute the length of slope to the toe of the depression. The length of depressed area shall equal the length of hydraulic jump from the toe of depression out toward the CHIMP centerline. At the end of the hydraulic jump the basin slopes up to the CHIMP Invert at a 4:1

Location: N. Cemetary Box Sta. = 40+57.36, Road Sta. = 229+81.

Basin Characteristics: Depth of Depression Below CHIMP Inv. = 0.239

At 4:1 horizontal Dist = 0.96' use 1'

Conjugate Depth (starting at Basin Inv.) = 1.7294'

W/ Depression Conjugate Depth = CHIMP Tailwater = 1.4

Jump length = 8.3 ft.

Horizontal Length Back to CHIMP Inv. El. = 0.96' use

Total overall Length of Basin = 11.0'

Depth at Toe of Basin is 0.2517'

Velocity at Toe of Basin is 14.8389 fps

Frude = 5.2

Conjugate Depth = 1.7294'

Conjugate Velocity = 2.1593 fps

Greiner

Job No. E002102 Project Old Cross Cut Canal Sheet 2 of 2

Subject Depressed Basin Design for Spillways

By RHF Date 9-7-94 Checked By VG Date 9/7/94

Location: S. Cemetary Box Sta. 33+57.34, Road. Sta. 222+80

Basin Characteristics: Depth of Depression Below CHIMP Inv. = 0.75

A 4:1 horizontal Distance = 3.02'

W/ Depression the Conjugate Depth = CHIMP Tw

Jump Length = 7.9'

Horizontal Length Back to CHIMP Inv. El = 3.02

Total Overall Length of Basin = 14.1'

Depth at Toe of Basin = 0.2413'

Velocity at Toe of Basin = 19.7709 fps

Frude = 7.1

Conjugate Depth = 2.5052'

Conjugate Velocity = 1.9044 fps