PROPOSED BANK PROTECTION ALONG THE SALT RIVER VIC. TRI-CITY & CENTER ST. LANDFILLS

FINAL DESIGN REPORT

PROPOSED BANK PROTECTION ALONG THE SALT RIVER IN THE VICINITY OF THE TRI-CITY AND CENTER STREET LANDFILLS

sla

A105.607

Property of
Flood Control District of MC Library
Please Return to
2801 W. Durango
Phoenix, AZ 85009

FINAL DESIGN REPORT

PROPOSED BANK PROTECTION ALONG THE SALT RIVER IN THE VICINITY OF THE TRI-CITY AND CENTER STREET LANDFILLS

Submitted to:

Salt River Pima-Maricopa Indian Community
Route 1, P.O. Box 216
Scottsdale, Arizona 85256

Submitted by:

Simons, Li & Associates, Inc.
4600 South Mill Avenue, Suite 200
Tempe, Arizona 85282

Registered Professional Engineer (Civil)
CERTIFICATE
21560
DENNIS L. RICHARDS
Date Signed 11/9/93
ARIZONA, U.S.A.

November 1993

TABLE OF CONTENTS

Section		Page
I.	INTRODUCTION	1
II.	HYDRAULICS AND SEDIMENT TRANSPORT ANALYSES	3
2.1	Hydraulics	3
2.2	Sediment Transport	5
III.	GEOTECHNICAL SERVICES	6
IV.	DESIGN CRITERIA	8
4.1	Plan and Profile	8
4.2	Recommended Toe-Down	11
4.3	Recommended Bank Height	14
V.	REFERENCES	16

APPENDIX: DETAILED CALCULATIONS

ENGINEERING BACKUP

Volume 1: HEC-2 Analysis
Volume 2: QUASED Analysis - Proposed Condition
Volume 3: QUASED Analysis - Ultimate Condition

Registered Professional Engineer (Civil)
CERTIFICATE NO. 21560
DENNIS L. RICHARDS
Date Signed 11/9/93
ARIZONA, U.S.A.

LIST OF TABLES

		Page
Table 1	Recommended Bank Protection Toe-Down Depths	12
Table 2	Recommended Bank Heights	15

LIST OF FIGURES

		Page
Figure 1	Location of the Tri-City and Center Street Landfills	2
Figure 2	100-Year Flood Hydrograph for the Study Reach	4
Figure 3	Typical Section of CSA Bank Protection	9
Figure 4	Typical Salt River Grain Size Distribution	10

I. INTRODUCTION

Simons, Li & Associates, Inc. (SLA) was retained by the Salt River Pima-Maricopa Indian Community to perform the final design for the protection of the Salt River banks in the vicinity of the Tri-City and Center Street landfills. The project reach extends along the Salt River from the Country Club Drive bridge to the Horne Road dip crossing, a distance of approximately 2 miles. The Tri-City Landfill is located along the northwest bank of the channel within the study reach, and the Center Street Landfill is located along the southeast bank (see Figure 1).

Several alternatives were developed and evaluated in the preliminary report (Ref. 3). The recommended plan is to use cement stabilized alluvium (CSA) for the bank protection along the river side boundary of each landfill. It also recommended that the north bank be extended to Horne Road to avoid back-cutting and failure of the proposed bank protection. The proposed plan shall be compatible with the ultimate improvement plan, in which both north and south banks shall extend throughout the entire length of channel between Country Club Drive and Horne Road.

The proposed channel is designed for the 100-year flood event. This report presents the results of the additional analysis required to fine-tune the results presented in the previous preliminary report (Ref. 3). The results are based on: (1) the new 1993 1"=100' topographic maps (1-foot contour interval); (2) the latest soil investigation (Ref. 2); and, (3) the preliminary report review comments. The revised supporting hydraulic and sediment transport analyses are discussed, and the geotechnical investigation documented. Finally, design methodologies and criteria used in the preparation of the construction plans are presented and discussed. Detailed calculations are presented in the Appendix.

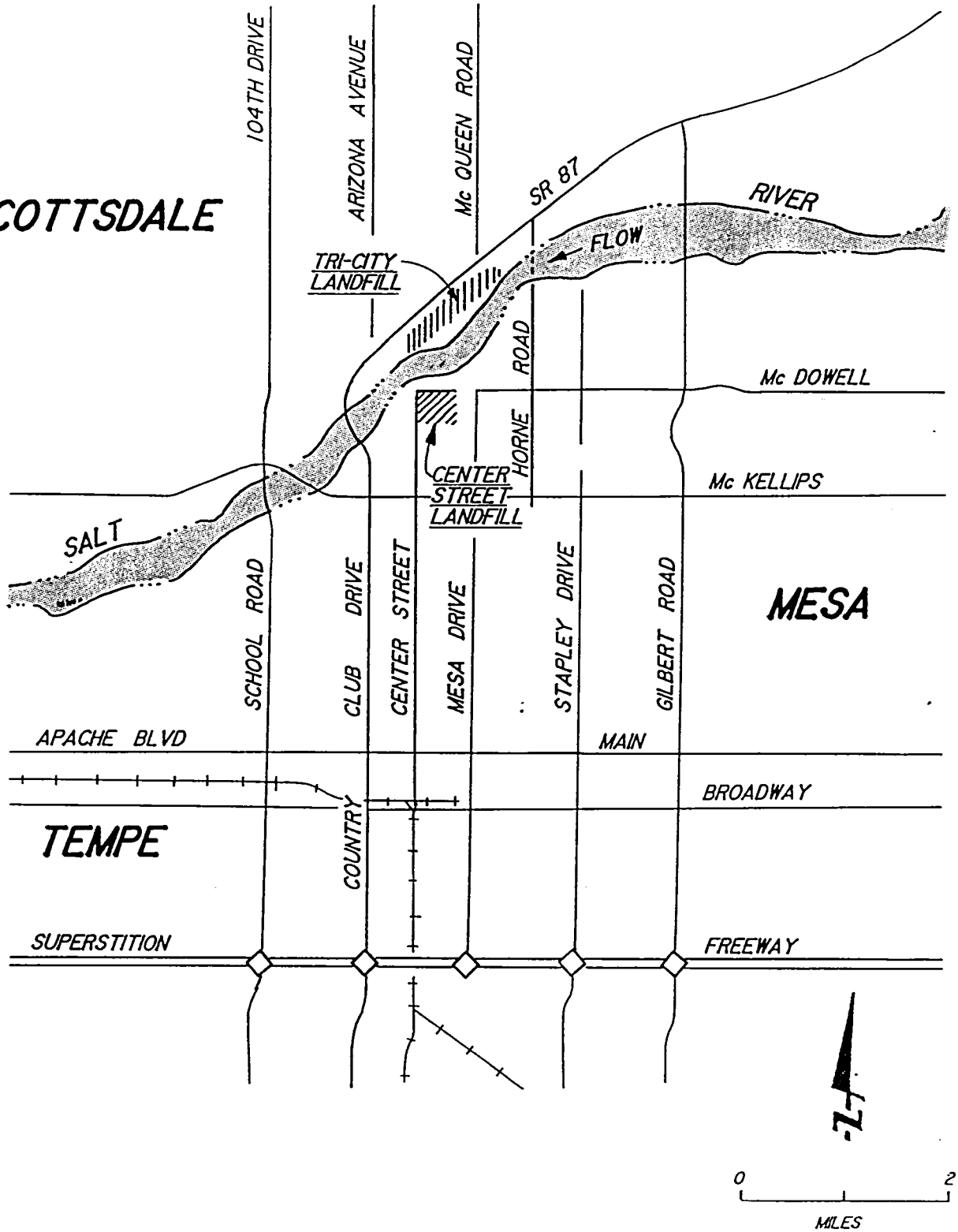

FIGURE I. LOCATION OF THE TRI-CITY AND CENTER STREET LANDFILLS

II. HYDRAULIC AND SEDIMENT TRANSPORT ANALYSES

The peak discharges used in this study reach were developed from data obtained from the hydrology report (Ref. 4) prepared by the U.S. Army Corps of Engineers (COE). The 2-year through 100-year peak discharge values of the study reach are summarized below.

Peak Discharges along the Study Reach

Return Period	Discharge (cfs)
2-year	1,400
5-year	43,000
10-year	98,000
25-year	147,000
50-year	167,000
100-year	225,000

A 100-year flood hydrograph for the study reach was developed from the COE's balanced hydrograph for the regulated 100-year flow routed through the existing Salt River Project system (Ref. 6). This design hydrograph (Figure 2) was utilized for the estimation of sediment transport volumes and time-dependent changes to the study.

2.1 Hydraulics

The hydraulic characteristics of the study reach were evaluated using the HEC-2 computer model (Ref. 7). The HEC-2 input deck was developed based on 1993, 1992, and 1986 topographic information. The 1993 aerial topographic information and field survey data were used to describe the project reach between the Center Street Landfill and Horne Road. This data was then incorporated into the 1986/1992 HEC-2 deck developed during the preliminary design phase.

The modeled portion of the Salt River extends from approximately 1000 feet downstream of Alma School Road (about 1.3 miles downstream of the Country Club Drive crossing) to approximately 1000 feet upstream of Stapely Drive (about 1 mile upstream of the Horne Road dip crossing). This modeled portion of the Salt River was broken down into 13 for analysis and presentation purposes.

Channel roughness values for the study reach were obtained from the 1988 COE report (Ref. 5). A Manning's n value of 0.033 was used for the main channel, with 0.038 used for the channel overbanks. It should be noted that the channel roughness value is significantly higher than the 0.025 value used in the 1984 Maricopa County Flood Insurance Study. HEC-2 output is included in the Engineering Backup (separate volume).

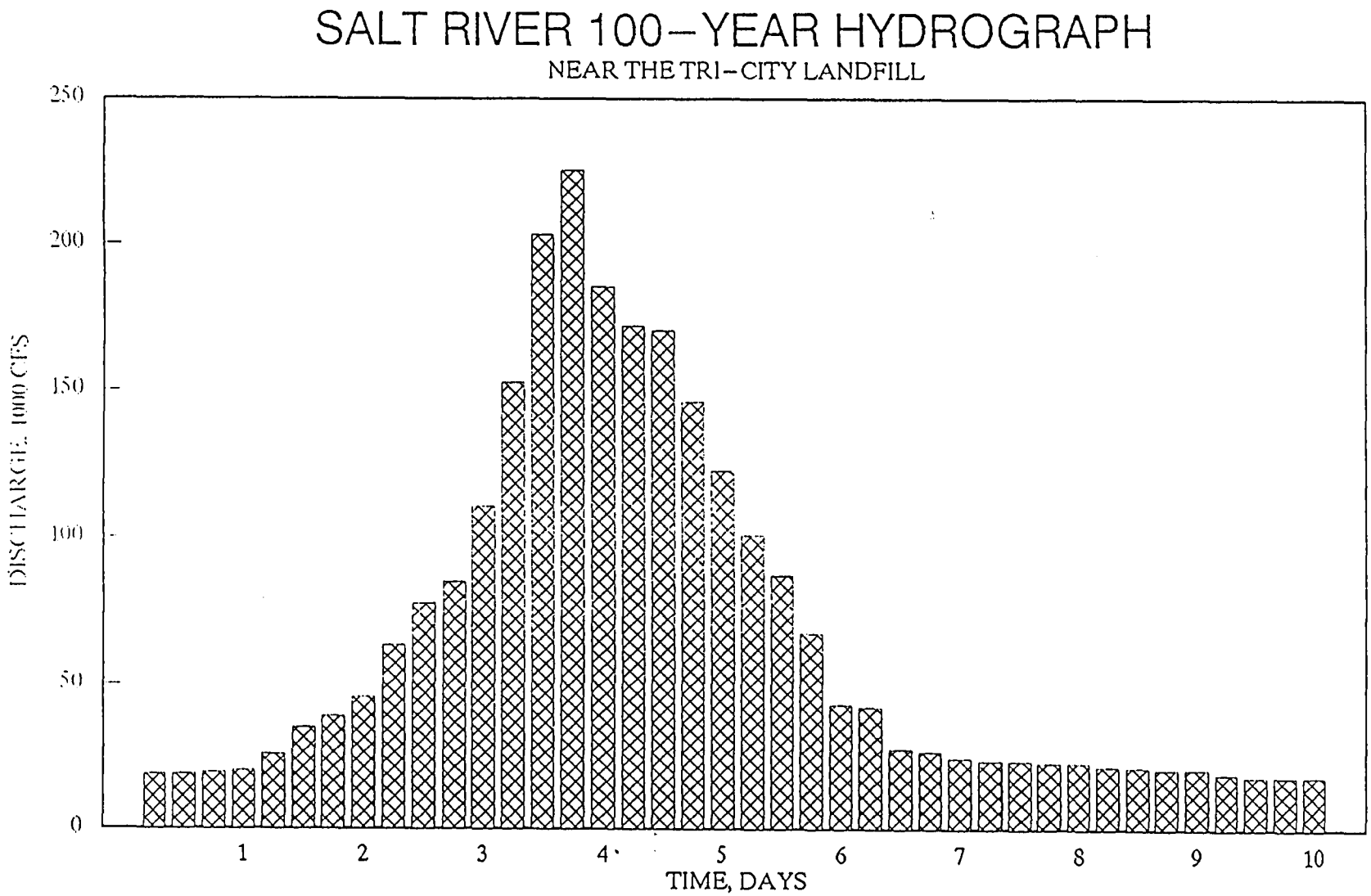

Figure 2 100-year Flood Hydrograph for the Study Reach

2.2 Sediment Transport

The stability of the study reach may be assessed through evaluation of the variation in the sediment transport capacity throughout its length. Areas with relatively high sediment transport capacity have greater potential for scour, and areas with relatively low ability to transport sediment will tend to aggrade.

The steady state analyses may over- or underestimate the actual channel change, due to the changes in hydraulics and bed material composition resulting from channel adjustments during the course of a flood event. The QUASED quasi-unsteady hydraulic and sediment transport model was applied to the study reach to provide a more realistic estimate of the extent of scour and deposition along the length of the study channel during the passage of a 100-year flood event. The QUASED model uses the same general procedures for computation of sediment transport and channel adjustment as used in the steady state analysis, except that the channel condition is updated after each time step of the analyzed hydrograph, and the hydraulics and bed material composition are updated. A six-hour time step was used for this analysis -- thus, 40 time steps of analysis were required for modeling the entire 100-year, 10-day hydrograph. In general, the QUASED results confirm the general tendencies indicated by the steady state analysis, with less extreme changes. QUASED results are included in the Engineering Backup (separate volume).

III. GEOTECHNICAL SERVICES

A geotechnical investigation was conducted by SHB AGRA, Inc. Field samples were collected in March and June 1993. The SHB investigation was to: (1) evaluate subsurface soil conditions along the proposed bank alignment; (2) perform laboratory tests to aid in classifying and characterizing subsurface soils of the site; (3) define the probable limit of landfill debris along the existing banks; and, (4) perform laboratory tests for preliminary evaluation of CSA mix design.

Twenty-five test pits were excavated along the north and south banks of the Salt River adjacent to the landfill areas to investigate conditions for bank protection and to collect samples for use in developing CSA mix designs. The test pits were excavated to depths ranging from 7 to 26 feet below existing grade utilizing a Link Belt LS-5800 track-hoe. The test pits allowed observation of representative soil samples. Soil samples were obtained from selected tests pits for use in developing CSA mix designs. All soils were described using the Unified Soil Classification System (ASTM D2487).

Additional exploratory test pits were excavated to further define the probable limit of landfill debris along the banks of the Salt River. The investigation procedure consisted of: (1) excavation of shallow probing pits, and (2) actual excavation of test pits. In general, the probing pit began at the toe of the existing river bank. Whenever landfill debris was found in the initial probing pit, a new probing pit located closer to the center of the river was initiated. The actual excavation of the test pit took place when landfill debris was not found in the probing pit. Landfill debris was encountered in Test Pit Nos. 9A, 10, 11, 11A, and 12 at depths ranging from 0 to 26 feet. In addition, traces of organic materials were found in Test Pit Nos. 4, 15, 16, 17, and 21.

Visual analyses of bed material at four locations along the Salt River channel adjacent to the landfill areas were performed to characterize their grain-size distribution for use in the sediment-transport analyses. The visual analyses were performed on bed material adjacent to Test Pit Nos. 2, 8, 14, and 18 using the transect method to provide a random sample population.

Atterberg limits and grain size analysis tests were performed on selected samples to aid in classification. Selected samples were also analyzed for moisture content. Three CSA mix designs were performed for the proposed bank protection system utilizing on-site materials.

The near-surface soil profile along the north bank of the Salt River adjacent to the Tri-City Landfill consists predominantly of sand, gravel and cobbles. The deposits generally are uncemented, non-plastic, light brown to brown and occasionally slightly to moderately stratified. The gravels predominantly are coarse grained and subrounded. Sands typically are medium to coarse grained and subangular to subrounded.

A number of test pits were terminated due to excessive caving (Test Pit No. 3, 5, 9B, 11 and 14) or encountering landfill debris during excavation (Test Pit Nos. 9A, 10, 11, 11A, and 12). Groundwater was encountered in Test Pit Nos. 1, 2, 3, 4, 5, 7, 8, and 9A at depths ranging from 3 to 25 feet.

The near-surface profile along the south bank of the Salt River adjacent to the Center Street Landfill area also consists predominantly of sand, gravel and cobbles. Some two to three-foot thick sand lenses occur in the uppermost portion of the soil profile. The sand, gravel and cobble deposits are uncemented to weakly lime cemented, non-plastic, light brown to brown and slightly stratified. The sand is predominantly medium to coarse grained and subangular to subrounded. The gravel is subrounded and coarse grained to well graded. The sand deposits are uncemented, nonplastic, brown and composed of fine-to medium-grained sand. Groundwater was encountered in Test Pit No. 17 at 14 feet.

A CSA mix design minimum compressive strength of 750 pounds per square inch (psi) at 7-days is required for the bank protection structure. Three samples of material from the Salt River bed were used in the CSA mix designs. The samples were obtained form Test Pit Nos. 20, 21, and 22 at the upstream limit of the project area.

Sample TP-20 was collected from a depth interval of 0 to 4 feet and consisted of deposits of sand, gravel and cobbles interbedded with lenses of gravelly sand. Sample TP-21 was obtained from a depth interval of 0 to 5 feet in an area characterized by sand and gravel deposits. Sample TP-22 was collected from a depth interval of 1/2 to 2 feet in a gravelly sand deposit. The CSA mix designs were performed in accordance with the Arizona Department of Transportation Test Method 220. A summary of the results is provided below:

Compressive Strength @ 7-days (psi)

Sample No.	5% Cement	7% Cement	9% Cement
TP-20	85	217	351
TP-21	126	285	497
TP-22	46	75	168

The materials obtained from the test pits are classified as poorly graded sands based on laboratory analyses. Poorly graded (well sorted) materials have more interstitial voids than well graded materials, and therefore require more cement to fill the voids. Because of the high percentage of cement that would be required to achieve the desired compressive strength, the materials tested are not economical for use as CSA. Based on previous experience with Salt River deposits, it is likely that suitable materials can be found within the project area. The actual cement mix percentage shall be determined by field tests during construction.

Detailed soil information and results of laboratory tests can be found in the SHB report (Ref. 2).

IV. DESIGN CRITERIA

4.1 Plan and Profile

The recommended protection measures are illustrated in the construction plans. These plans were developed using the hydraulic and sediment transport information presented in the previous sections of this report.

Due to the degree of uncertainty that is associated with the main channel topography in the project vicinity (described by 4-ft contour maps, developed from photographs taken in early 1992 with flow in the channel), the proposed and ultimate condition HEC-2 decks were adjusted for the development of the construction plans. The adjustment entailed filling of the mining pit immediately downstream of Country Club Drive, which is evident in the 1986 topo but is indeterminate in the 1992 photos. This full-pit adjustment was incorporated to provide more conservative results for the bank height determination.

Key criteria used in development of the construction plans are similar to those presented in the preliminary design report and are summarized as follows:

Design Hydrology:	Peak discharge = 225,000 cfs (100-year flood).
Topography:	Based on 1" = 100' topographic maps (1-foot contour interval) developed from aerial photographs taken in March of 1993.
CSA Alignment:	Based on the results of the geotechnical investigation, the CSA bank protection was located away from the known landfill debris. Whenever possible, it is recommended that the CSA shall stay away a minimum of 15' from the known landfill debris. A typical section of the CSA bank and the associated excavation and backfill is shown in Figure 3.
Channel Roughness:	Manning n = 0.033 for channel, 0.038 for overbanks.
Sediment Gradation:	Based on a composite gradation curve (Figure 4) developed from 25 samples taken from the Salt River at sites located between 40th Street and Dobson Road. This gradation curve was also verified with the soil data of the project reach.
Toe-Down Depth:	Sufficient to protect against the combined effects of the following scour components: long term degradation, general scour, low-flow incisement, bend scour, and bed-form scour. A factor of safety of 1.3 is applied to general scour, bend scour, and bed-form scour.
Protection Height:	Freeboard allowance of 3 feet over the sum of the 100-year flow depth and the maximum (mid-flood) potential 100-year aggradation depth.

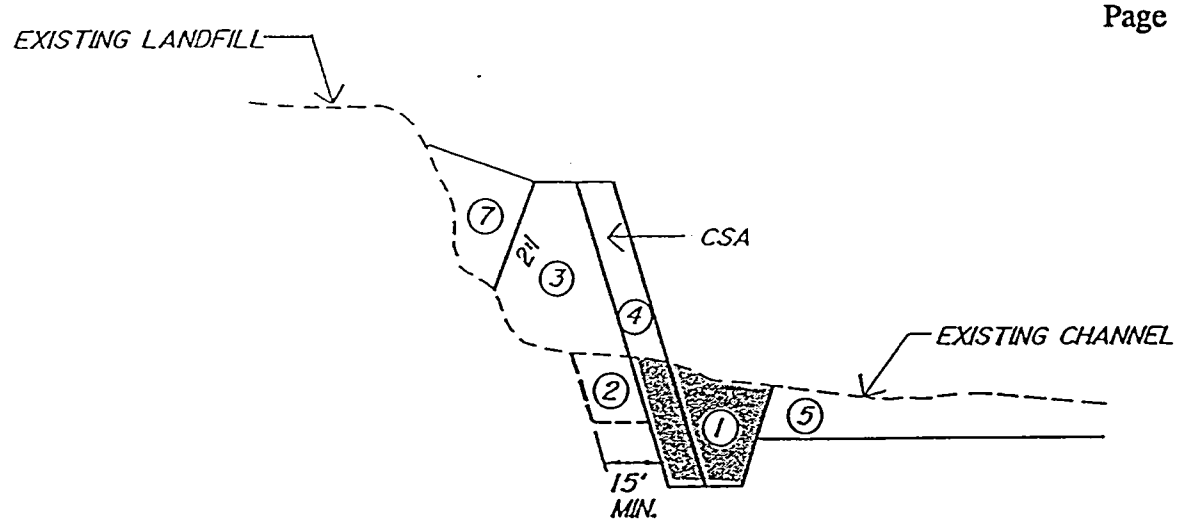

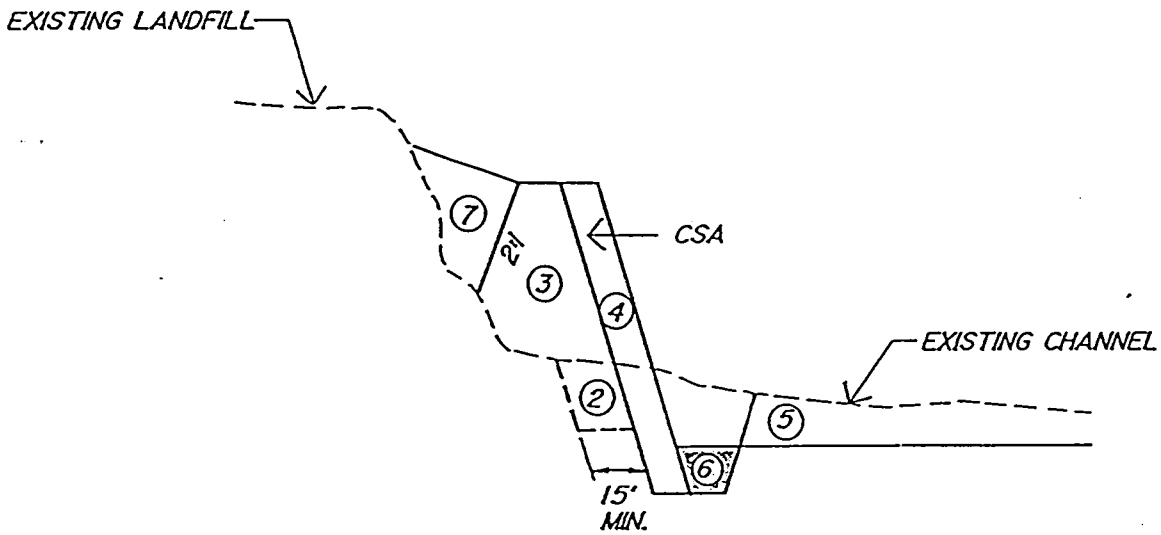

1. EXCAVATION FOR CSA
2. EXCAVATION FOR CSA - TO REPLACE EXIST. LANDFILL MAT'L.
3. EMBANKMENT FOR CSA - 95% STRUCTURAL FILL
4. PLACE CSA
5. CHANNELIZATION
6. BACKFILL CSA TOE DOWN - 85% UNCLASSIFIED FILL
7. BACKFILL - 85% UNCLASSIFIED FILL

Figure 3 - Typical Section of CSA Bank Protection

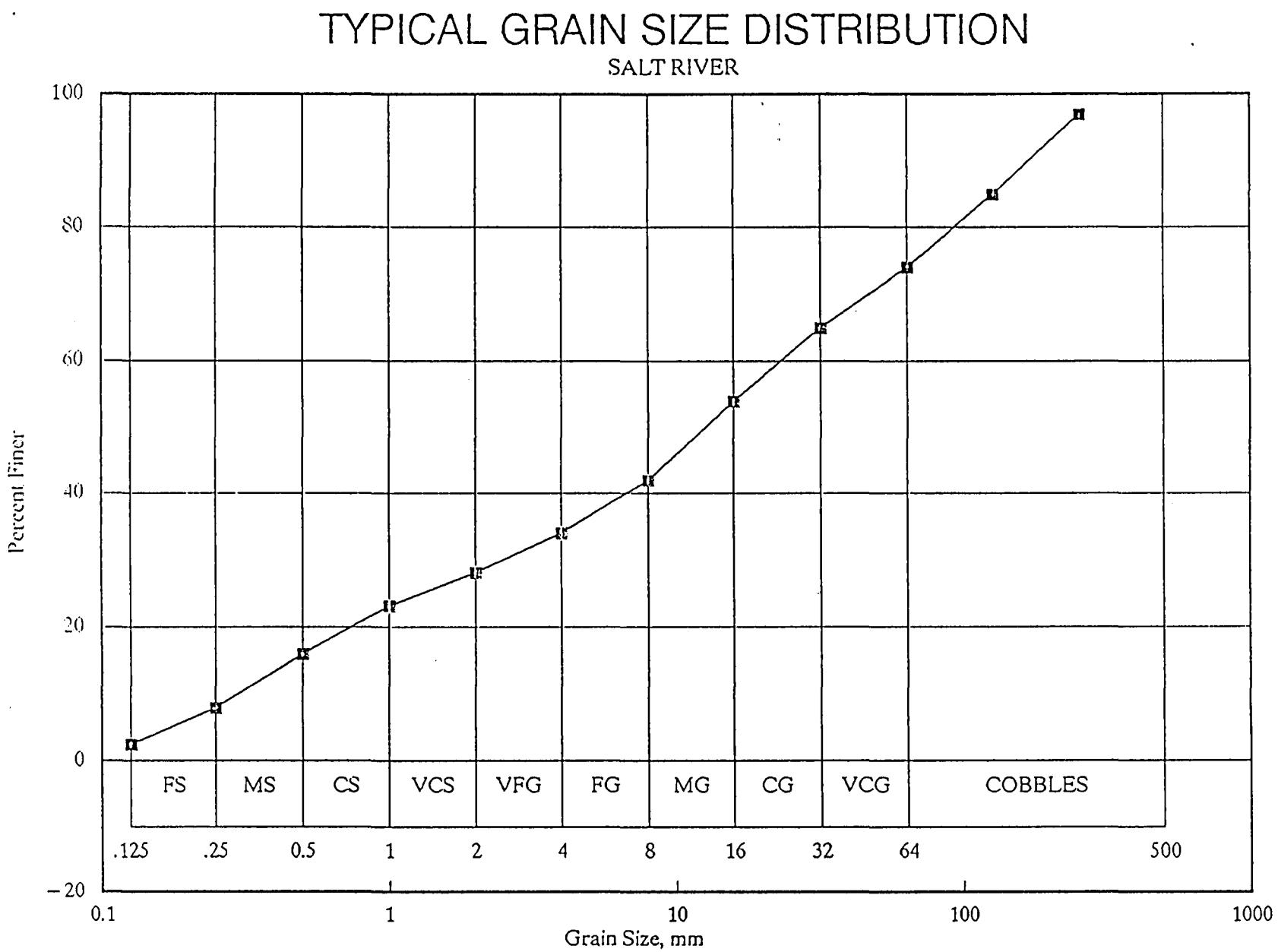

Figure 4 Typical Salt River Grain Size Distribution

The proposed plan for stabilization of the Salt River banks in the vicinity of the Tri-City and Center Street landfills was developed to be compatible with the ultimate improvement plan discussed in the preliminary design report. Thus, bank protection heights and toe-down depths were determined considering the more conservative of the two conditions. Typically, the proposed bank heights were controlled by the hydraulic characteristics generated under the local protection (recommended plan) conditions. Maximum scour depths predominate under this condition as well. The following paragraphs describe the design criteria for both bank height and bank toe-down in greater detail.

4.2 Recommended Toe-Down

The recommended toe-down depths are summarized in Table 1. The total toe-down depth is the sum of the following components: 1) long-term degradation, 2) general scour, 3) low-flow incisement, 4) bend scour, 5) bed-form scour, and 6) a factor of safety. Both the recommended plan and ultimate plan conditions were investigated. To be conservative, the design condition uses the maximum toe-down depth required considering both currently recommended and ultimate improvement conditions. Detailed calculations are presented in the Appendix.

Long-Term Degradation

The procedures described in Computing Degradation and Local Scour, by the Bureau of Reclamation (January 1984), were utilized to quantify the long-term degradation component of total potential scour. Long-term degradation was computed using the concepts of equilibrium slope and streambed armoring.

The dominant discharge was used for the long-term degradation analysis. The dominant discharge is defined as the discharge which, if allowed to flow constantly, would have the same overall channel shaping effect as the natural fluctuating discharges. The dominant discharge is typically between a 5-year and 10-year event for ephemeral channels (Ref. 1). The design hydraulic conditions for the 10-year event were used in determining the long-term degradation response for the design reach of the Salt River upstream of Country Club Drive.

The analysis resulted in estimated armor depths of 3.7 ft. and 2.1 ft., and equilibrium slopes of 0.055% and 0.049% for the recommended and ultimate conditions, respectively. The potential long-term degradation component at each cross-section location was computed as the smaller of: 1) the estimated armoring depth, or 2) depth to equilibrium slope, with the location of the Country Club Drive bridge used as a pivot point.

TABLE 1. RECOMMENDED BANK PROTECTION TOE-DOWN DEPTHS

NORTH BANK STATION	HEC-2 X-SEC NUMBER	CHANNEL INVERT ELEV.	LONG-TERM DEGRAD.	GENERAL SCOUR	LOW-FLOW INCISEMENT	BEND SCOUR	BED-FORM SCOUR	FACTOR OF SAFETY (FT)	TOTAL TOEDOWN (FT)	TOEDOWN ELEV. (FT)
I. PROPOSED CONDITION										
	284	184.48	0.0	0.2	2.0	0.0	0.9	0.3	3.4	181.05
	66.7	186.80	1.9	0.0	2.0	0.0	0.8	0.2	5.0	181.84
	74.7	189.40	3.7	0.0	2.0	0.0	0.7	0.2	6.7	182.73
	89.7	194.10	3.7	0.0	2.0	0.0	0.4	0.1	6.3	187.83
102+00	102	197.50	3.7	1.2	2.0	0.0	1.0	0.7	8.6	188.91
106+00	106	197.00	3.7	1.1	2.0	0.0	0.9	0.6	8.4	188.64
110+00	110	196.50	3.7	0.0	2.0	0.0	0.7	0.2	6.6	189.90
114+00	114	196.00	3.7	0.0	2.0	0.0	0.8	0.2	6.7	189.32
118+00	118	195.20	3.7	0.3	2.0	0.0	1.2	0.5	7.7	187.51
122+00	122	196.50	3.7	0.2	2.0	0.0	1.0	0.4	7.3	189.25
126+00	126	197.50	3.7	0.8	2.0	0.0	1.5	0.7	8.7	188.75
130+00	130	198.20	3.7	0.7	2.0	0.0	1.8	0.8	9.0	189.22
134+00	134	199.70	3.7	0.7	2.0	0.0	1.4	0.6	8.4	191.31
138+00	138	201.10	3.7	0.8	2.0	0.0	1.9	0.8	9.1	191.95
142+00	142	202.60	3.7	1.4	2.0	0.0	2.0	1.0	10.1	192.48
146+00	146	203.30	3.7	1.5	2.0	0.0	2.0	1.1	10.3	192.99
150+00	150	204.00	3.7	1.5	2.0	0.0	2.1	1.1	10.4	193.64
154+00	154	204.50	3.7	1.8	2.0	0.0	2.5	1.3	11.3	193.21
157+58	157.6	205.00	3.7	0.0	2.0	0.0	1.7	0.5	7.9	197.12
160+00	160	205.50	3.7	0.0	2.0	7.7	1.9	2.9	18.2	187.30
164+00	164	207.00	3.7	0.4	2.0	7.7	2.3	3.1	19.2	187.75
168+00	168	209.30	3.7	2.4	2.0	7.7	2.7	3.8	22.3	187.00
172+00	172	210.00	3.7	2.3	2.0	7.7	2.8	3.8	22.4	187.63
176+00	176	210.00	3.7	2.1	2.0	7.7	3.0	3.8	22.3	187.66
180+00	180	211.50	3.7	7.0	2.0	0.0	3.0	3.0	18.7	192.80
	184	212.30	3.7	6.9	2.0	0.0	5.3	3.7	21.5	190.76
II. ULTIMATE CONDITION										
	284	184.48	0.0	0.0	2.0	0.0	0.9	0.3	3.2	181.29
	66.7	191.94	2.1	0.0	2.0	0.0	0.9	0.3	5.3	186.65
	74.7	193.58	2.1	0.0	2.0	0.0	1.0	0.3	5.4	188.14
	89.7	196.65	2.1	0.0	2.0	0.0	1.3	0.4	5.8	190.89
102+00	102	199.18	2.1	-0.0	2.0	0.0	1.5	0.4	6.0	193.17
106+00	106	200.00	2.1	0.0	2.0	0.0	1.6	0.5	6.1	193.87
110+00	110	200.82	2.1	0.0	2.0	0.0	1.6	0.5	6.2	194.59
114+00	114	201.64	2.1	0.0	2.0	0.0	1.7	0.5	6.3	195.31
118+00	118	202.46	2.1	-0.0	2.0	0.0	1.7	0.5	6.3	196.16
122+00	122	203.28	2.1	-0.0	2.0	0.0	1.8	0.5	6.4	196.89
126+00	126	204.10	2.1	0.0	2.0	0.0	1.8	0.5	6.5	197.63
130+00	130	204.92	2.1	0.0	2.0	0.0	1.9	0.6	6.6	198.37
134+00	134	205.74	2.1	0.1	2.0	0.0	1.9	0.6	6.8	198.99
138+00	138	206.56	2.1	-0.0	2.0	0.0	1.9	0.6	6.6	200.01
142+00	142	207.38	2.1	0.2	2.0	0.0	2.0	0.6	6.9	200.51
146+00	146	208.20	2.1	0.2	2.0	0.0	2.0	0.7	6.9	201.27
150+00	150	209.02	2.1	0.0	2.0	0.0	2.0	0.6	6.7	202.33
154+00	154	209.85	2.1	0.0	2.0	0.0	2.0	0.6	6.7	203.14
157+58	157.6	210.58	2.1	0.8	2.0	0.0	2.0	0.8	7.7	202.85
160+00	160	211.08	2.1	0.8	2.0	7.8	2.0	3.2	17.9	193.20
164+00	164	211.90	2.1	0.8	2.0	7.8	2.0	3.2	17.9	193.99
168+00	168	212.72	2.1	0.3	2.0	7.8	2.0	3.0	17.3	195.42
172+00	172	213.54	2.1	0.4	2.0	7.8	2.0	3.1	17.5	196.08
176+00	176	214.36	2.1	0.4	2.0	7.8	1.7	2.9	16.9	197.50
180+00	180	215.18	2.1	0.7	2.0	0.0	1.4	0.6	6.8	208.36
	184	216.00	2.1	0.6	2.0	0.0	1.3	0.6	6.5	209.49

III. DESIGN CONDITION -- WORST CASE

NORTH BANK STATION	HEC-2 X-SEC NUMBER	INTERIM 1992 INVERT	REQUIRED TOEDOWN ELEV.	DESIGN TOEDOWN ELEV.(FT)
	284	184.48	181.05	N/A
	66.7	186.80	181.84	N/A
	74.7	189.40	182.73	N/A
	89.7	194.10	187.83	N/A
102+00	102	197.50	188.91	185.00
106+00	106	197.00	188.64	185.63
110+00	110	196.50	189.90	186.25
114+00	114	196.00	189.32	186.88
118+00	118	195.20	187.51	187.50
122+00	122	196.50	189.25	188.50
126+00	126	197.50	188.75	188.50
130+00	130	198.20	189.22	185.50
134+00	134	199.70	191.31	189.50
138+00	138	201.10	191.95	190.50
142+00	142	202.60	192.48	191.50
146+00	146	203.30	192.99	192.50
150+00	150	204.00	193.64	192.50
154+00	154	204.50	193.21	192.50
157+58	157.6	205.00	197.12	192.50
160+00	160	205.50	187.30	182.00
164+00	164	207.00	187.75	182.50
168+00	168	209.30	187.00	183.00
172+00	172	210.00	187.63	183.00
176+00	176	210.00	187.66	183.00
180+00	180	211.50	192.80	186.50
	184	212.30	190.76	N/A

General Scour

General scour refers to the vertical lowering of the channel bed over relatively short time periods, for example, the general scour in a given reach after passage of a single flood event. Contraction scour can be defined as a special case of general scour. General scour from a contraction occurs because the flow area becomes smaller than the upstream channel and the average velocity and bed shear stress increase, hence there is an increase in stream power (τ V) at the contraction and more bed material is transported through the contracted section than is transported into the section. As the bed level is lowered, velocity decreases, shear stress decreases. Equilibrium is restored when the transport rate through the contracted section is equal to the incoming rate.

QUASED was used to quantify the local imbalance between sediment supply and transport capacity along the project reach. The maximum scour profiles were obtained considering the entire 100-year, 10-day event. The estimated maximum scour depth at each cross-section was used for general scour component of the total potential scour.

Low-Flow Incisement

The large width-depth ratios for the design reach of the Salt River require that consideration be given to the development of low-flow channels. There are no rigorous methodologies for the prediction of low-flow channel incisement. A review of existing field conditions and experience from previous projects along the Salt River indicate a low-flow incisement depth of 2 feet is reasonable for the design reach.

Bend Scour

The bends associated with meandering channels will induce transverse or "secondary" currents which will scour sediment from the outer bend and cause it to be deposited along the inner bend. The proposed north bank immediately downstream of Horne Road has bend radius of 2,770 ft. with an estimated flow path radius of 2,000 ft. Bend scour was calculated using relationships developed by Zeller (Ref. 1) and applied between Sta. 160+00 and Sta. 176+00.

Bed-Form Scour

The bed-form scour component was estimated by calculating half of the antidune height. The antidune height was calculated using relationships developed by Kennedy (Ref, 1).

Factor of Safety

A factor of safety was included to account for non-uniform flow distributions typical of alluvial channels. This factor of safety is calculated as 30 percent of the sum of the general scour, bend scour, and bed-form scour which are the components affected by non-uniform flow conditions.

Total Toe-Down Depth/Elevation

The column labeled "total toe-down" provides the sum of the long-term degradation, general scour, low-flow incisement, bend scour, and bed form components, plus the factor of safety. By subtracting the total toe-down depth from the channel invert, the toe-down elevation can be obtained.

Design Toe-Down Elevation

The design toe-down elevation was determined based on the most conservative value of toe-down elevation obtained under the proposed plan and ultimate conditions. By comparing toe-down elevations for each cross-section under each improvement plan, the required toe-down elevations were determined. The design toe-down elevations were rounded to the nearest one-half foot from the required toe-down elevations. Additional adjustment (smoothing) was also applied during plan preparation, in consideration of construction efficiency.

4.3 Recommended Bank Height

The recommended bank heights are summarized in Table 2. The required top of bank is the sum of the following components: 1) general aggradation, 2) 100-year water surface, 3) flow superelevation, and 4) a 3-ft freeboard allowance. Both the proposed plan and ultimate improvement conditions were investigated. As with toe-downs, the larger of the two bank heights computed considering both recommended and ultimate conditions was used for design.

QUASED was used to quantify the maximum deposition depths associated with the 100-year, 10-day event. The maximum deposition depth was used as general aggradation, and the 100-year peak flow depth was added to this value. A 3-ft freeboard allowance was applied, and the design top of bank elevations were rounded up to the nearest one-half foot. The top of bank profile was smoothed to allow for ease of construction.

TABLE 2. RECOMMENDED BANK HEIGHTS

NORTH BANK STATION	HEC-2 X-SEC NUMBER	PROPOSED CONDITION CHANNEL INVERT ELEV. (FT)	100-YR WATER SURFACE (FT)	GENERAL AGGRAD. (FT)	SUPER-ELEVATION (FT)	REQUIRED WATER SURFACE (FT)	ULTIMATE CONDITION CHANNEL INVERT ELEV. (FT)	100-YR WATER SURFACE (FT)	GENERAL AGGRAD. (FT)	SUPER-ELEVATION (FT)	REQUIRED WATER SURFACE (FT)	MAX. WATER SURFACE (FT)	DESIGN CONDITION REQUIRED TOP BANK (FT)	DESIGN TOP BANK (FT)	DESIGN TOEDOWN ELEV. (FT)	DESIGN BANK HEIGHT (FT)
	284	184.48	215.41	2.8	0.0	218.23	184.48	215.41	4.1	0.0	219.53	219.53	222.53	N/A	N/A	N/A
	66.7	186.80	216.02	4.4	0.0	220.42	191.94	215.81	4.2	0.0	219.97	220.42	223.42	N/A	N/A	N/A
	74.7	189.40	216.67	2.8	0.0	219.47	193.58	216.19	3.8	0.0	220.01	220.01	223.01	N/A	N/A	N/A
	89.7	194.10	217.75	6.4	0.0	224.15	196.65	217.16	3.3	0.0	220.41	224.15	227.15	N/A	N/A	N/A
102+00	102	197.50	217.87	2.8	0.0	220.67	199.18	218.30	2.4	0.0	220.72	220.72	223.72	228.00	185.00	43.00
106+00	106	197.00	218.37	2.2	0.0	220.57	200.00	218.74	2.4	0.0	221.14	221.14	224.14	228.00	185.63	42.37
110+00	110	196.50	219.03	3.9	0.0	222.93	200.82	219.23	2.2	0.0	221.41	222.93	225.93	228.00	186.25	41.75
114+00	114	196.00	219.31	3.8	0.0	223.11	201.64	219.75	2.2	0.0	221.91	223.11	226.11	228.00	186.88	41.12
118+00	118	195.20	219.47	2.3	0.0	221.77	202.46	220.31	1.8	0.0	222.15	222.15	225.15	228.00	187.50	40.50
122+00	122	196.50	220.54	2.3	0.0	222.84	203.28	220.91	1.8	0.0	222.73	222.84	225.84	228.00	188.50	39.50
126+00	126	197.50	220.98	1.2	0.0	222.18	204.10	221.53	1.7	0.0	223.23	223.23	226.23	228.00	188.50	39.50
130+00	130	198.20	221.84	1.6	0.0	223.44	204.92	222.19	1.7	0.0	223.87	223.87	226.87	228.00	185.50	42.50
134+00	134	199.70	223.28	0.6	0.0	223.88	205.74	222.87	1.4	0.0	224.23	224.23	227.23	228.00	189.50	38.50
138+00	138	201.10	223.75	0.7	0.0	224.45	206.56	223.58	1.4	0.0	225.02	225.02	228.02	228.70	190.50	38.20
142+00	142	202.60	224.76	0.2	0.0	224.96	207.38	224.31	1.3	0.0	225.63	225.63	228.63	229.40	191.50	37.90
146+00	146	203.30	225.88	0.3	0.0	226.18	208.20	225.05	1.3	0.0	226.35	226.35	229.35	230.10	192.50	37.60
150+00	150	204.00	226.88	0.6	0.0	227.48	209.02	225.81	1.4	0.0	227.19	227.48	230.48	230.80	192.50	38.30
154+00	154	204.50	227.55	0.6	0.0	228.15	209.85	226.58	1.4	0.0	228.03	228.15	231.15	231.50	192.50	39.00
157+58	157.6	205.00	229.19	4.9	0.0	234.09	210.58	227.28	1.2	0.0	228.50	234.09	237.09	237.50	192.50	45.00
160+00	160	205.50	229.30	5.1	1.4	235.80	211.08	227.75	1.3	1.3	230.37	235.80	238.80	239.00	182.00	57.00
164+00	164	207.00	229.53	4.9	1.4	235.83	211.90	228.55	1.2	1.3	231.05	235.83	238.83	239.00	182.50	56.50
168+00	168	209.30	229.90	4.3	1.4	235.60	212.72	229.34	2.1	1.3	232.72	235.60	238.60	239.00	183.00	56.00
172+00	172	210.00	230.56	4.6	1.4	236.56	213.54	230.15	2.1	1.3	233.51	236.56	239.56	240.00	183.00	57.00
176+00	176	210.00	231.27	5.0	1.4	237.67	214.36	231.35	2.0	1.3	234.69	237.67	240.67	241.00	183.00	58.00
180+00	180	211.50	232.17	0.9	0.0	233.07	215.18	232.23	2.6	0.0	234.85	234.85	237.85	241.00	186.50	54.50
	184	212.30	231.56	1.0	0.0	232.56	216.00	232.95	2.5	0.0	235.45	235.45	238.45	N/A	N/A	N/A

V. REFERENCES

1. Arizona Department of Water Resources, March 1985, "Design Manual for Engineering Analysis of Fluvial Systems", Phoenix, Arizona.

2. SHB AGRA, Inc., October 1993, "Geotechnical Investigation Report: Bank Protection Adjacent to Landfill Areas on the Salt River, Salt River Pima-Maricopa Indian Community, Maricopa County, Arizona.

3. Simons, Li & Associates, Inc., June 1993, "Preliminary Design Report, Proposed Bank Protection Along the Salt River in the Vicinity of the Tri-City and Center Street Landfills", Tempe, Arizona.

4. U.S. Army Corps of Engineers, May 1982, "Gila River and Tributaries, Central Arizona Water Control Study, Hydrology Report", Los Angeles District.

5. U.S. Army Corps of Engineers, April 1988, "Salt-Gila Floodplain Analysis; Maricopa County, Arizona", Los Angeles District.

6. U.S. Army Corps of Engineers, October 1988, "Study for Flood Control Alternatives to Cliff Dam".

7. U.S. Army Corps of Engineers, February 1991, "HEC-2 Water Surface Profiles User's Manual".

APPENDIX

DETAILED CALCULATIONS

SALT RIVER BANK PROTECTION-- BETWEEN COUNTRY CLUB DRIVE AND HORNE ROAD

8/18/93

HEC-2 X-SEC	RIVER DIST.	PROPOSED CONDITION 93INV.	WS.	DEP	CH VEL.	GENERAL (QUASED) MAX.INV.	MIN.INV.	AGG. DEP	SCR DEP	SUP.ELE	MAX.WS	STABLE INV.	LONG-TERM	LOW-FLOW	BEND SCOUR	BED-FORM	FACTOR OF SAFETY (30%)	TOTAL TOEDOWN	TOEDOWN ELEV.
#18 284	6949	184.48	215.41	30.93	8.24	187.3	184.3	2.8	0.2	0.0	218.23	184.48	0.0	2.0	0.0	0.9	0.3	3.4	181.05
66.7	7649	186.80	216.02	29.22	7.63	191.2	186.8	4.4	0.0	0.0	220.42	184.87	1.9	2.0	0.0	0.8	0.2	5.0	181.84
#17 74.7	8449	189.40	216.67	27.27	7.42	192.2	189.4	2.8	0.0	0.0	219.47	185.31	3.7	2.0	0.0	0.7	0.2	6.7	182.73
#16 89.7	9949	194.10	217.75	23.65	5.71	200.5	194.1	6.4	0.0	0.0	224.15	186.13	3.7	2.0	0.0	0.4	0.1	6.3	187.83
#15 102	11179	197.50	217.87	20.37	8.69	200.3	196.3	2.8	1.2	0.0	220.67	186.81	3.7	2.0	0.0	1.0	0.7	8.6	188.91
106	11579	197.00	218.37	21.36	8.37	199.2	195.9	2.2	1.1	0.0	220.57	187.03	3.7	2.0	0.0	0.9	0.8	8.4	188.64
#14 110	11979	196.50	219.03	22.53	7.16	200.4	196.5	3.9	0.0	0.0	222.93	187.25	3.7	2.0	0.0	0.7	0.2	8.6	189.90
114	12379	196.00	219.31	23.31	7.48	199.8	196.0	3.8	0.0	0.0	223.11	187.47	3.7	2.0	0.0	0.8	0.2	6.7	189.32
#13 118	12779	195.20	219.47	24.27	8.54	197.5	194.9	2.3	0.3	0.0	221.77	187.69	3.7	2.0	0.0	1.2	0.5	7.7	187.51
122	13179	196.50	220.54	24.04	8.59	198.8	196.3	2.3	0.2	0.0	222.84	187.91	3.7	2.0	0.0	1.0	0.4	7.3	189.25
#12 126	13579	197.50	220.98	23.48	10.69	198.7	196.7	1.2	0.8	0.0	222.18	188.13	3.7	2.0	0.0	1.5	0.7	8.7	188.75
130	13979	198.20	221.84	23.64	11.63	199.8	197.5	1.6	0.7	0.0	223.44	188.35	3.7	2.0	0.0	1.8	0.8	9.0	189.22
#11 134	14379	199.70	223.28	23.58	10.07	200.3	199.0	0.6	0.7	0.0	223.88	188.57	3.7	2.0	0.0	1.4	0.6	8.4	191.31
138	14779	201.10	223.75	22.65	11.71	201.8	200.3	0.7	0.8	0.0	224.45	188.79	3.7	2.0	0.0	1.9	0.8	9.1	191.95
#10 142	15179	202.60	224.76	22.16	12.18	202.8	201.2	0.2	1.4	0.0	224.96	189.01	3.7	2.0	0.0	2.0	1.0	10.1	192.48
146	15579	203.30	225.88	22.58	12.31	203.6	201.8	0.3	1.5	0.0	226.18	189.23	3.7	2.0	0.0	2.0	1.1	10.3	192.99
#9 150	15979	204.00	226.88	22.88	12.42	204.8	202.5	0.6	1.5	0.0	227.48	189.45	3.7	2.0	0.0	2.1	1.1	10.4	193.64
154	16379	204.50	227.55	23.05	13.60	205.1	202.7	0.8	1.8	0.0	228.15	189.67	3.7	2.0	0.0	2.5	1.3	11.3	193.21
#8 157.6	16737	205.00	229.19	24.19	11.14	209.9	205.0	4.9	0.0	0.0	234.09	189.86	3.7	2.0	0.0	1.7	0.5	7.9	197.12
160	16979	205.50	229.30	23.80	11.90	210.6	205.5	5.1	0.0	1.4	235.80	190.00	3.7	2.0	7.7	1.9	2.9	18.2	187.30
164	17379	207.00	229.53	22.53	13.11	211.9	206.6	4.9	0.4	1.4	235.63	190.22	3.7	2.0	7.7	2.3	3.1	19.2	187.75
168	17779	209.30	229.90	20.60	14.07	213.6	206.9	4.3	2.4	1.4	235.60	190.44	3.7	2.0	7.7	2.7	3.8	22.3	187.00
#7 172	18179	210.00	230.56	20.56	14.46	214.6	207.7	4.6	2.3	1.4	236.56	190.66	3.7	2.0	7.7	2.8	3.8	22.4	187.63
176	18579	210.00	231.27	21.27	14.91	215.0	207.9	5.0	2.1	1.4	237.67	190.88	3.7	2.0	7.7	3.0	3.8	22.3	187.66
180	18979	211.50	232.17	20.67	14.91	212.4	204.5	0.9	7.0	0.0	233.07	191.10	3.7	2.0	0.0	3.0	3.0	18.7	192.80
184	19379	212.30	231.56	19.26	19.78	213.3	205.4	1.0	6.9	0.0	232.56	191.32	3.7	2.0	0.0	5.3	3.7	21.5	190.76

used #6 each #

HEC-2 X-SEC	RIVER DIST.	ULTIMATE CONDITION IMP. INV.	WS.	DEP	CH VEL.	GENERAL (QUASED) MAX.INV.	MIN.INV.	AGG. DEP	SCR DEP	SUP.ELE	MAX.WS	STABLE INV.	LONG-TERM	LOW-FLOW	BEND SCOUR	BED-FORM	FACTOR OF SAFETY (30%)	TOTAL TOEDOWN	TOEDOWN ELEV.
284	6949	184.48	215.41	30.93	8.24	188.6	184.5	4.1	0.0	0.0	219.53	184.48	0.0	2.0	0.0	0.9	0.3	3.2	181.29
66.7	7649	191.94	215.81	23.87	8.25	196.1	191.9	4.2	0.0	0.0	219.97	184.82	2.1	2.0	0.0	0.9	0.3	5.3	186.65
74.7	8449	193.58	216.19	22.61	8.75	197.4	193.6	3.8	0.0	0.0	220.01	185.22	2.1	2.0	0.0	1.0	0.3	5.4	188.14
89.7	9949	196.65	217.16	20.51	9.73	199.9	196.6	3.3	0.0	0.0	220.41	185.95	2.1	2.0	0.0	1.3	0.4	5.8	190.89
102	11179	199.18	218.30	19.12	10.51	201.6	199.2	2.4	-0.0	0.0	220.72	186.55	2.1	2.0	0.0	1.5	0.4	6.0	193.17
106	11579	200.00	218.74	18.74	10.75	202.4	200.0	2.4	0.0	0.0	221.14	186.75	2.1	2.0	0.0	1.6	0.5	6.1	193.87
110	11979	200.82	219.23	18.41	10.95	203.0	200.8	2.2	0.0	0.0	221.41	186.94	2.1	2.0	0.0	1.6	0.5	6.2	194.59
114	12379	201.64	219.75	18.11	11.15	203.8	201.6	2.2	0.0	0.0	221.91	187.14	2.1	2.0	0.0	1.7	0.5	6.3	195.31
118	12779	202.46	220.31	17.85	11.33	204.3	202.5	1.8	-0.0	0.0	222.15	187.34	2.1	2.0	0.0	1.7	0.5	6.3	196.16
122	13179	203.28	220.91	17.63	11.49	205.1	203.3	1.8	-0.0	0.0	222.73	187.53	2.1	2.0	0.0	1.8	0.5	6.4	196.89
126	13579	204.10	221.53	17.43	11.63	205.8	204.1	1.7	0.0	0.0	223.23	187.73	2.1	2.0	0.0	1.8	0.5	6.5	197.63
130	13979	204.92	222.19	17.27	11.76	206.6	204.9	1.7	0.0	0.0	223.87	187.92	2.1	2.0	0.0	1.9	0.6	6.6	198.37
134	14379	205.74	222.87	17.13	11.86	207.1	205.6	1.4	0.1	0.0	224.23	188.12	2.1	2.0	0.0	1.9	0.6	6.8	198.99
138	14779	206.56	223.58	17.02	11.95	208.0	206.6	1.4	-0.0	0.0	225.02	188.32	2.1	2.0	0.0	1.9	0.6	6.6	200.01
142	15179	207.38	224.31	16.93	12.03	208.7	207.2	1.3	0.2	0.0	225.63	188.51	2.1	2.0	0.0	2.0	0.6	6.9	200.51
146	15579	208.20	225.05	16.85	12.09	209.5	208.0	1.3	0.2	0.0	226.35	188.71	2.1	2.0	0.0	2.0	0.7	6.9	201.27
150	15979	209.02	225.81	16.79	12.14	210.4	208.6	1.4	0.0	0.0	227.19	188.90	2.1	2.0	0.0	2.0	0.6	6.7	202.33
154	16379	209.85	226.58	16.73	12.19	211.3	209.6	1.4	0.0	0.0	228.03	189.10	2.1	2.0	0.0	2.0	0.6	6.7	203.14
157.6	16737	210.58	227.28	16.70	12.21	211.8	209.8	1.2	0.8	0.0	228.50	189.28	2.1	2.0	0.0	2.0	0.8	7.7	202.85
160	16979	211.08	227.75	16.67	12.23	212.4	210.3	1.3	0.8	1.3	230.37	189.39	2.1	2.0	7.8	2.0	3.2	17.9	193.20
164	17379	211.80	228.55	16.65	12.25	213.1	211.1	1.2	0.8	1.3	231.05	189.59	2.1	2.0	7.8	2.0	3.2	17.9	193.99
168	17779	212.72	229.34	16.62	12.27	214.8	212.4	2.1	0.3	1.3	232.72	189.79	2.1	2.0	7.8	2.0	3.0	17.3	195.42
172	18179	213.54	230.15	16.61	12.28	215.6	213.1	2.1	0.4	1.3	233.51	189.98	2.1	2.0	7.8	2.0	3.1	17.5	196.08
176	18579	214.36	231.35	16.99	11.07	216.4	214.0	2.0	0.4	1.3	234.69	190.18	2.1	2.0	7.8	1.7	2.9	16.9	197.50
180	18979	215.18	232.23	17.05	10.24	217.8	214.5	2.6	0.7	0.0	234.85	190.37	2.1	2.0	0.0	1.4	0.6	6.8	208.36
184	19379	216.00	232.95	16.95	9.63	218.5	215.4	2.5	0.6	0.0	235.45	190.57	2.1	2.0	0.0	1.3	0.6	6.5	209.49

3 1 2 4 5 6 5 7 8 9

DESIGN CONDITION -- WORST CASE

HEC-2 X-SEC	RIVER DIST	PROPOSED 93 INV.	HIGH WS	TOEDOWN ELEV	MIN.TOP BANK ELE	MIN.BANK HEIGHT
284	6949	184.48	219.53	181.05	222.53	41.5
66.7	7649	186.80	220.42	181.84	223.42	41.6
74.7	8449	189.40	220.01	182.73	223.01	40.3
89.7	9949	194.10	224.15	187.83	227.15	39.3
102	11179	197.50	220.72	188.91	223.72	34.8
106	11579	197.00	221.14	188.64	224.14	35.5
110	11979	196.50	222.93	189.90	225.93	36.0
114	12379	196.00	223.11	189.32	226.11	36.8
118	12779	195.20	222.15	187.51	225.15	37.6
122	13179	196.50	222.84	189.25	225.84	36.6
126	13579	197.50	223.23	188.75	226.23	37.5
130	13979	198.20	223.87	189.22	226.87	37.7
134	14379	199.70	224.23	191.31	227.23	35.9
138	14779	201.10	225.02	191.95	228.02	36.1
142	15179	202.60	225.63	192.48	228.63	36.1
146	15579	203.30	226.35	192.99	229.35	36.4
150	15979	204.00	227.48	193.64	230.48	36.8
154	16379	204.50	228.15	193.21	231.15	37.9
157.6	16746	205.00	234.09	197.12	237.09	40.0
160	16979	205.50	235.80	187.30	238.80	51.5
164	17379	207.00	235.83	187.75	238.83	51.1
168	17779	209.30	235.60	187.00	238.60	51.6
172	18179	210.00	236.56	187.63	239.56	51.9
176	18579	210.00	237.67	187.66	240.67	53.0
180	18979	211.50	234.85	192.80	237.85	45.1
184	19379	212.30	235.45	190.76	238.45	47.7
			(10)	(11)	(12)	(13)

Procedures:

(1) Data extracted from Quased summary files "Sbsuma8.out" & "Sbsuma9.out."

(2) (1) minus Invert ele. at (3)

(3) HEC-II data

(4) WS. at (3) plus Agg. depth & sup. ele.

(5) Equilibrium slope, armoring depth & low flow see preliminary report Appendix

(6) bend scour see p. 3

(7) counted for non-uniform flow distributions. 30% of general bend, bed-form scour

(8) Sum of general, long-term. low-flow, bend, bed-form & factor of safety.

(9) inv. at (3) minus (8)

(10) higher values from (4) of either case

(11) lower values from (9) "

(12) (10) + 3'

(13) (12) minus (11)

SALT RIVER BANK PROTECTION -- COUNTRY CLUB DR. TO HORNE RD.

6/1/93

NORTH BANK STATION	HEC-2 CROSS SECTION	EGL	Q10 HDEPTH	Q10 VCH	TOPWID	ARMORING MEYER-PETER, MULLER (mm)	ARMORING BOTTOM VELOCITY METHOD (mm)	ARMORING SHIELD'S DIAGRAM (mm)	ARMORING YANG INCIPIENT MOTION (mm)	EQUILIBRIUM SLOPE SCHOK-LITSCH METHOD	EQUILIBRIUM SLOPE MEYER-PETER, MULLER METHOD	EQUILIBRIUM SLOPE SHIELD'S DIAGRAM METHOD	BOUNDARY REYNOLD'S NUMBER
I. INTERIM CONDITION													
	284	0.000962	11.07	6.93	1277	34	90	33	96	0.00051	0.00043	0.00044	2882
	101	0.001959	7.82	7.85	1598	48	116	47	124	0.00061	0.00061	0.00062	3456
	102	0.001066	8.76	6.25	1790	29	73	29	78	0.00066	0.00054	0.00055	2698
	103	0.000239	11.25	3.49	2498	8	23	8	24	0.00085	0.00042	0.00043	1447
	104	0.001731	9.69	8.5	1190	53	136	52	145	0.00049	0.00049	0.00050	3617
	105	0.000615	8.97	4.82	2267	17	44	17	47	0.00079	0.00053	0.00054	2074
	106	0.001654	7.53	7.03	1852	39	93	38	99	0.00068	0.00063	0.00064	3116
	107	0.007138	5.79	12.26	1381	130	283	128	302	0.00054	0.00082	0.00084	5677
	108	0.001411	7.95	6.79	1818	35	87	35	93	0.00067	0.00060	0.00061	2957
	109	0.004631	7.72	12.4	1052	113	289	110	309	0.00044	0.00062	0.00063	5280
	110	0.001064	9.53	6.58	1562	32	81	31	87	0.00059	0.00050	0.00051	2812
	111	0.003399	9.66	12.1	842	103	275	101	294	0.00037	0.00049	0.00050	5060
	112	0.002898	11.26	12.09	720	103	275	101	294	0.00033	0.00042	0.00043	5045
	113	0.00081	13.9	7.37	956	35	102	35	109	0.00041	0.00034	0.00035	2964
	316	0.00809	7.85	15.95	783	200	478	196	511	0.00035	0.00061	0.00062	7038
					AVG	65	163	64	174	0.00055	0.00054	0.00055	
								TOTAL AVG	117			0.00055	
II. ULTIMATE CONDITION													
	284	0.000962	11.07	6.93	1277	34	90	33	96	0.00051	0.00043	0.00044	2882
	101	0.00045	14.24	5.62	1226	20	59	20	63	0.00050	0.00033	0.00034	2235
	102	0.00061	13.01	6.16	1223	25	71	25	76	0.00050	0.00037	0.00037	2487
	103	0.001055	11.06	7.27	1219	37	99	36	106	0.00049	0.00043	0.00044	3017
	104	0.001435	10.1	7.97	1217	46	119	45	128	0.00049	0.00047	0.00048	3362
	105	0.001712	9.58	8.41	1216	52	133	51	142	0.00049	0.00050	0.00051	3576
	106	0.001851	9.36	8.61	1216	55	139	54	149	0.00049	0.00051	0.00052	3676
	107	0.001925	9.25	8.71	1216	56	143	55	152	0.00049	0.00052	0.00052	3726
	108	0.001969	9.19	8.77	1216	57	145	56	154	0.00049	0.00052	0.00053	3757
	109	0.001992	9.16	8.8	1215	57	146	56	156	0.00049	0.00052	0.00053	3772
	110	0.001999	9.15	8.81	1215	58	146	57	156	0.00049	0.00052	0.00053	3777
	111	0.002007	9.14	8.82	1215	58	146	57	156	0.00049	0.00052	0.00053	3782
	112	0.001707	9.15	8.14	1315	49	125	48	133	0.00052	0.00052	0.00053	3490
	113	0.001572	8.98	7.72	1415	44	112	44	120	0.00055	0.00053	0.00054	3318
	316	0.001446	8.84	7.32	1515	40	101	39	108	0.00058	0.00054	0.00055	3157
					AVG	46	118	45	126	0.00051	0.00048	0.00049	
								TOTAL AVG	84			0.00049	

Note: X-sec is based on 1992 topo used in the preliminary design

W

1. Meyer-Peter, Muller:

$$D_c = \frac{dS}{K\left(\frac{n_s}{D_{90}^{1/6}}\right)^{3/2}}$$

D_c = Individual Particle Size (mm)
K = 0.19 (in-lb)
d = flow depth of Q_{10} (ft)
S = EGL slope (ft/ft)
n_s = Manning's "n" for Streambed (0.033)
D_{90} = Particle size 90% finer (mm)

Interim (proposed)

$$D_c = \frac{9.69 \times 0.001731}{0.19\left(\frac{0.033}{165^{1/6}}\right)^{3/2}}$$

$$= 52.5 \approx 53 \text{ mm}$$

Ultimate

$$D_c = \frac{10.10 \times 0.001435}{0.19\left(\frac{0.033}{165^{1/6}}\right)^{3/2}} = 46 \text{ mm}$$

2. Competent Bottom Velocity:

$$D_c = 1.88\, V_m^2$$

D_c = Armor size (mm)
V_m = Mean ch. vel. (fps)

Interim (proposed)

$$D_c = 1.88(8.50)^2 = 135.8 \approx 136 \text{ mm}$$

Ultimate

$$D_c = 1.88(7.97)^2 = 119.4 \approx 119 \text{ mm}$$

3. Shield's Diagram:

$$T_* = \frac{T_c}{(\gamma_s - \gamma_w) D_c} = 0.060$$

$$\text{or } D_c = \frac{\gamma_w d S}{(\gamma_s - \gamma_w)(0.060)}$$

T_* = Dimensionless Shear Stress
T_c = Critical shear stress = $\gamma_w dS$ (psf)
γ_s = Specific wt. of Sediment (165 pcf)
γ_w = " water (62.4 pcf)
d = flow depth of Q_{10} (ft)

Interim

$$D_c = \frac{62.4(9.69)(0.001731)}{(165-62.4)(0.060)} = 0.17\ ft \doteq 52\ mm$$

Ultimate

$$D_c = \frac{62.4(10.1)(0.001435)}{(165-62.4)(0.060)} = 0.15\ ft \doteq 45\ mm$$

4. Yang Incipient Motion :

$$D_c = 0.00659\ V_{cr}^2$$

D_c = Armor Size (ft)

V_{cr} = Critical Avg. water velocity @ incipient Motion (fps)

Interim

$$D_c = 0.00659(8.50)^2 = 0.48\ ft = 145\ mm$$

Ultimate

$$D_c = 0.00659(7.97)^2 = 0.42\ ft = 12.8\ mm$$

5. Schoklitsch Method :

$$S_L = K\left(\frac{D_{50}B}{Q}\right)^{3/4}$$

S_L = Stable Slope (ft/ft)

K = 0.00174 (in-lb)

D_{50} = mean particle size (mm)

B = channel width (ft)

Q = Dominant Discharge Q_{10} (cfs)

Interim

$$S_L = 0.00174\left(\frac{15\times1190}{98{,}000}\right)^{3/4}$$

$$= 0.00049\ ft/ft$$

Ultimate

$$S_L = 0.00174\left(\frac{15\times1217}{98{,}000}\right)^{3/4}$$

$$= 0.00049\ ft/ft$$

6. Meyer-Peter, Muller Method:

$$S_L = \frac{K\left(\frac{Q}{Q_B}\right)\left(\frac{n_s}{D_{90}^{1/6}}\right)^{3/2} D}{d}$$

S_L = Stable Slope (ft/ft)

K = 0.19 (in-lb units)

$\frac{Q}{Q_B}$ = ratio of Total flow to flow in ch.

D_{90} = particle size 90% finer (mm)

n_s = Manning's "n" for streambed

D = D_{50} (mm)

d = flow depth of Q_{10} (ft)

Interim

$$S_L = \frac{0.19(1)\left(\frac{0.033}{165^{1/6}}\right)^{3/2}(15)}{9.69} = 0.00049$$

Ultimate

$$S_L = \frac{0.19(1)\left(\frac{0.033}{165^{1/6}}\right)^{3/2}(15)}{10.10} = 0.00047$$

7. Shield's Diagram Method:

$$R_* = \frac{u_* D}{\nu} \qquad T_* = \frac{T_c}{(\gamma_s - \gamma_w)D} = \frac{\gamma_w d S_L}{(\gamma_s - \gamma_w)D}$$

R_* = Boundary Reynold's No.

u_* = Shear Vel. $(S_L R g)^{1/2}$ (ft/s)

S_L = Slope (ft/ft)

R = Hydraulic Radius (ft)

g = 32.2 ft/s²

D = D_{50} (ft)

ν = Kinematic Viscosity of water (10^{-5} ft²/s)

T_* = Dimensionless shear stress (0.060)

T_c = Critical Shear Stress (psf)

γ_s, γ_w = Sp. wt. of sed. & water (165, 62.4 pcf)

d = flow depth @ Q_{10} (ft)

Interim

$$R_* = \frac{[0.001731(9.69)32.2]^{1/2}(15/304.8)}{10^{-5}}$$

$$= 3{,}617$$

$$S_L = \frac{T_*(\gamma_s - \gamma_w)D}{\gamma_w d} = \frac{0.060(165-62.4)(15/304.8)}{62.4(9.69)}$$

$$= 0.00050 \text{ ft/ft}$$

Ultimate

$$R_* = \frac{[0.001435(10.10)32.2]^{1/2}(15/304.8)}{10^{-5}}$$

$$= 3{,}362$$

$$S_L = \frac{0.060(165-62.4)(15/304.8)}{62.4(10.10)}$$

$$= 0.00048 \text{ ft/ft}$$

Armoring Depth

$$Y_d = Y_a\left(\frac{1}{\Delta P} - 1\right)$$

Y_d = depth of Armoring

Y_a = Thickness of Armoring Layer ($2D_c$)

ΔP = % of Original Bed Material larger than Armor Size, D_c

Interim

$D_c = 117$ mm, $\Delta P = 0.17$,

$Y_a = 2 \times (117/304.8)(1/0.17 - 1)$

$= 3.7'$

Ultimate

$D_c = 84$ mm, $\Delta P = 0.21$, $Y_a = 2 \times 84/304.8 = 0.55$

$Y_d = 0.55(1/0.21 - 1)$

$= 2.1'$

Bend Scour (between X-176 and X-160)

$$\Delta Z_{bs} = \frac{0.0685\, Y V^{0.8}}{Y_k^{0.4} S_e^{0.3}} \left[2.1 \left(\frac{W}{4 r_c} \right)^{0.2} - 1 \right]$$

$$\doteqdot \frac{0.0685\, Y^{0.6} V^{0.8}}{S_e^{0.3}} \left[1.59 \left(\frac{W}{r_c} \right)^{0.2} - 1 \right]$$

ΔZ_{bs} = bend scour
Y = flow depth
V = velocity
S_e = energy slope
W = Topwidth
r_c = radius of bend

0.238

Proposed (Q_{100})

main flow path, not bank alignment

$W = 830'$, $r_c = 2{,}000'$, $Y \doteqdot 20.5$, $V = 14.5$, $S_e = 2.0 \times 10^{-3}$

$\Delta Z_{bs} = 7.7'$

Ultimate (Q_{100})

$W = 1250'$, $r_c = 2{,}000'$, $Y = 16.8'$, $V = 11.5$, $S_e = 1.8 \times 10^{-3}$

$\Delta Z_{bs} = 7.8'$

Superelevation

$$\Delta y_{se} = 0.5 \frac{V^2}{g} \frac{W}{r_c} \quad \text{(COE 1970)}$$

Proposed (Q_{100}) $\Delta y_{se} = 1.4'$

Ultimate (Q_{100}) $\Delta y_{se} = 1.3'$

Bed-form Scour

ΔZ_{as} = bed-form scour (ft)
h_a = antidune height (ft)
V = flow velocity (fps)

$$\Delta Z_{as} = \frac{1}{2} h_a = 0.0135\, V^2 \quad \text{(ADWR)}$$

④ X-114

Proposed $V = 7.46$ fps

$\Delta Z_{as} = 0.8'$

Ultimate $V = 11.15$ fps

$\Delta Z_{as} = 1.7'$

1:1 CSA STABILITY ANALYSIS

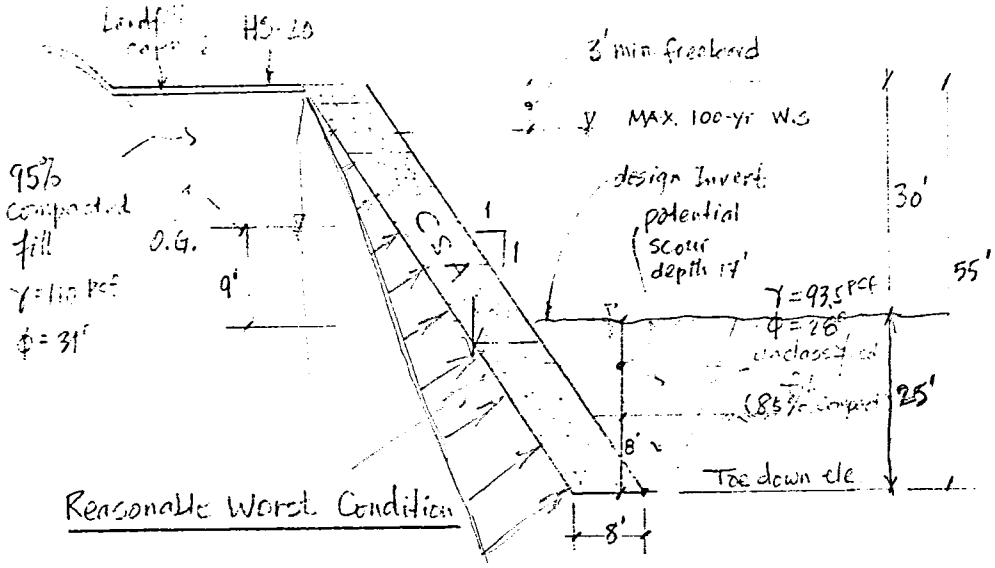

Reasonable Worst Condition

Assumption: I. Soil 95% compacted fill $\gamma = 110$ pcf ($\gamma_{sat} = 67$ pcf)
$\phi = 31°$ (SC soil) — See P.12

95% unclassified fill $\gamma = 93.5$ pcf ($\gamma_{sat} = 67$ pcf)
$\phi = 28°$ (CL soil)

CSA & soil interface $\phi = 29°$ — See P.13

II. Hydrostatic pre. (WS ele.)
Behind CSA 1/3 difference of 100-yr WS & Invert $= (30-3) \times 1/3 = 9'$ (due to landfill capping)
In Channel design invert

III. scour depth (w/ 1.5 Factor of Safety)
$25'/1.5 \doteq 17'$

Stability Analysis

$\phi = 31°$ $K_a = \dfrac{\sin^2(135+31)}{\sin^2(135)\sin(135)\left[1+\sqrt{\dfrac{\sin(31)\sin(31)}{\sin(135)\sin(135)}}\right]^2} = 0.055$ (Coulomb Theory)

$\phi = 28°$ $K_p = \dfrac{\sin^2(135-28)}{\sin^2(135)\sin(135)\left[1-\sqrt{\dfrac{\sin(28)\sin(28)}{\sin(135)\sin(135)}}\right]^2} = 22$

$$P_{soil\text{-}active} = \left[\tfrac{1}{2}(110)(21)^2 + \tfrac{1}{2}(21\times110\times2 + 34\times65)\times34\right]\times0.055 = 1334 + 6450 = 7{,}784$$

$$P_{Hydro} = \tfrac{1}{2}(62.4)(34)^2 = 36{,}067$$

Force due to HS-20

$$\mu \text{ at surface} = \frac{16500}{(1.67+0.8)}(0.055) = [illegible]$$

$$\mu \text{ at depth } h = \frac{[illegible]}{(1.67+[illegible])(1.83+[illegible]h)}$$

$h = 10'$ $\mu = 2.5$

$h = 55'$ $\mu = 0.09$

$$P_{HS\text{-}20} = \tfrac{1}{2}(635+[illegible])(10) + \tfrac{1}{2}(72-16.09)\times(45) = 3246 \text{ lbf}$$

$$W_{CSA} = 8\times[25.5\times130 + 29.5\times(130-62.4)] = 42{,}474$$

$$R_{CSA} = W\tan\phi = 42{,}474\times\tan 29^\circ = 23{,}544$$

$$P_{Hydro} = \tfrac{1}{2}(62.4)(25)^2 = 19{,}500$$

$$P_{soil\text{-}passive} = \tfrac{1}{2}(67)(22)(8)^2 = 47{,}168$$

<u>Sliding</u>

$$S.F. = \frac{23{,}544 + 19{,}500 + 47{,}168}{7{,}784 + 36{,}067 + 3{,}246} = \frac{90{,}212}{47{,}097} = 1.92 \quad \text{OK}$$

<u>Over-turn</u> (to front toe)

$$M_{active} = (1334)(41) + (6450)(17) + (36{,}067)(34/3) + 3246\times(55 - 10/3) = 576{,}480$$

$$M_{passive} = (42{,}474)(55/2) + (19{,}500)(25/3) + (47{,}168)(8/3) = 1{,}456{,}316$$

$$S.F. = \frac{1{,}456.316}{576{,}480} = 2.53 \quad \text{OK}$$

TABLE 1

Typical Properties of Compacted Soils

Group Symbol	Soil Type	Range of Maximum Dry Unit Weight, pcf	Range of Optimum Moisture, Percent	Typical Value of Compression		Typical Strength Characteristics				Typical Coefficient of Permeability ft./min.	Range of CBR Values	Range of Subgrade Modulus k lbs/cu in.
				At 1.4 tsf (20 psi)	At 3.6 tsf (50 psi)	Cohesion (as compacted) psf	Cohesion (saturated) psf	ϕ (Effective Stress Envelope Degrees)	Tan ϕ			
				Percent of Original Height								
GW	Well graded clean gravels, gravel-sand mixtures.	125 - 135	11 - 8	0.3	0.6	0	0	>38	>0.79	5×10^{-2}	40 - 80	300 - 500
GP	Poorly graded clean gravels, gravel-sand mix	115 - 125	14 - 11	0.4	0.9	0	0	>37	>0.74	10^{-1}	30 - 60	250 - 400
GM	Silty gravels, poorly graded gravel-sand-silt.	120 - 135	12 - 8	0.5	1.1	.....	.....	>34	>0.67	$>10^{-6}$	20 - 60	100 - 400
GC	Clayey gravels, poorly graded gravel-sand-clay.	115 - 130	14 - 9	0.7	1.6	.....	.....	>31	>0.60	$>10^{-7}$	20 - 40	100 - 300
SW	Well graded clean sands, gravelly sands.	110 - 130	16 - 9	0.6	1.2	0	0	38	0.79	$>10^{-3}$	20 - 40	200 - 300
SP	Poorly graded clean sands, sand-gravel mix.	100 - 120	21 - 12	0.8	1.4	0	0	37	0.74	$>10^{-3}$	10 - 40	200 - 300
SM	Silty sands, poorly graded sand-silt mix.	110 - 125	16 - 11	0.8	1.6	1050	420	34	0.67	$5 \times >10^{-5}$	10 - 40	100 - 300
SM-SC	Sand-silt clay mix with slightly plastic fines.	110 - 130	15 - 11	0.8	1.4	1050	300	33	0.66	$2 \times >10^{-6}$	5 - 30	100 - 300
SC	Clayey sands, poorly graded sand-clay-mix.	105 - 125	19 - 11	1.1	2.2	1550	230	31	0.60	$5 \times >10^{-7}$	5 - 20	100 - 300
ML	Inorganic silts and clayey silts.	95 - 120	24 - 12	0.9	1.7	1400	190	32	0.62	$>10^{-5}$	15 or less	100 - 200
ML-CL	Mixture of inorganic silt and clay.	100 - 120	22 - 12	1.0	2.2	1350	460	32	0.62	$5 \times >10^{-7}$	.....	
CL	Inorganic clays of low to medium plasticity.	95 - 120	24 - 12	1.3	2.5	1800	270	28	0.54	$>10^{-7}$	15 or less	50 - 200
OL	Organic silts and silt-clays, low plasticity.	80 - 100	33 - 21	.....	.....	.....	.....	.....	.....	.....	5 or less	50 - 100
MH	Inorganic clayey silts, elastic silts.	70 - 95	40 - 24	2.0	3.8	1500	420	25	0.47	$5 \times >10^{-7}$	10 or less	50 - 100
CH	Inorganic clays of high plasticity	75 - 105	36 - 19	2.6	3.9	2150	230	19	0.35	$>10^{-7}$	15 or less	50 - 150
OH	Organic clays and silty clays	65 - 100	45 - 21	.....	.....	.....	.....	.....	.....	.....	5 or less	25 - 100

Notes:

1. All properties are for condition of "Standard Proctor" maximum density, except values of k and CBR which are for "modified Proctor" maximum density.
2. Typical stength characteristics are for effective strength envelopes and are obtained from USBR data.
3. Compression values are for vertical loading with complete lateral confinement.
4. (>) indicates that typical property is greater than the value shown.
   (..) indicates insufficient data available for an estimate.

From: "Foundations & Earth Structures - Design Manual 7.2" by Dept. of the Navy, Naval Facilities Eng. Command.

12

TABLE 1
Ultimate Friction Factors and Adhesion for Dissimilar Materials

Interface Materials	Friction factor, tan δ	Friction angle, δ degrees
Mass concrete on the following foundation materials:		
Clean sound rock	0.70	35
Clean gravel, gravel-sand mixtures, coarse sand	0.55 to 0.60	29 to 31
Clean fine to medium sand, silty medium to coarse sand, silty or clayey gravel	0.45 to 0.55	24 to 29
Clean fine sand, silty or clayey fine to medium sand	0.35 to 0.45	19 to 24
Fine sandy silt, nonplastic silt	0.30 to 0.35	17 to 19
Very stiff and hard residual or preconsolidated clay	0.40 to 0.50	22 to 26
Medium stiff and stiff clay and silty clay	0.30 to 0.35	17 to 19
(Masonry on foundation materials has same friction factors.)		
Steel sheet piles against the following soils:		
Clean gravel, gravel-sand mixtures, well-graded rock fill with spalls	0.40	22
Clean sand, silty sand-gravel mixture, single size hard rock fill	0.30	17
Silty sand, gravel or sand mixed with silt or clay	0.25	14
Fine sandy silt, nonplastic silt	0.20	11
Formed concrete or concrete sheet piling against the following soils:		
Clean gravel, gravel-sand mixture, well-graded rock fill with spalls	0.40 to 0.50	22 to 26
Clean sand, silty sand-gravel mixture, single size hard rock fill	0.30 to 0.40	17 to 22
Silty sand, gravel or sand mixed with silt or clay	0.30	17
Fine sandy silt, nonplastic silt	0.25	14
Various structural materials:		
Masonry on masonry, igneous and metamorphic rocks:		
Dressed soft rock on dressed soft rock	0.70	35
Dressed hard rock on dressed soft rock	0.65	33
Dressed hard rock on dressed hard rock	0.55	29
Masonry on wood (cross grain)	0.50	26
Steel on steel at sheet pile interlocks	0.30	17

Interface Materials (Cohesion)	Adhesion C_a (psf)
Very soft cohesive soil (0 - 250 psf)	0 - 250
Soft cohesive soil (250 - 500 psf)	250 - 500
Medium stiff cohesive soil (500 - 1000 psf)	500 - 750
Stiff cohesive soil (1000 - 2000 psf)	750 - 950
Very stiff cohesive soil (2000 - 4000 psf)	950 - 1,300

From: "Foundations & Earth Structures - Design Manual 7.2" by Dept. of the Navy, Naval Facilities Eng. Command.