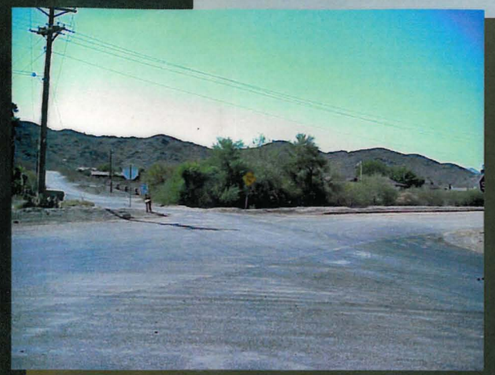

A117.911

Laveen AREA DRAINAGE MASTER PLAN

Technical Section
Appendices

FLOOD CONTROL DISTRICT OF MARICOPA COUNTY

HDR

Appendix A: Hydrologic Model: HEC-1 tree, input, portions of output

Appendix B: Sub-basins for Laveen ADMP

Appendix C: MCDOT Records of Reported Flooding

Appendix D: Detailed Description of Listed Threatened and Endangered Species and Species of Concern for the Laveen ADMP Focus Area

Appendix E: Copy of AGFD's Guidelines for Handling Sonoran Desert Tortoises Encountered on Development Projects

Appendix F: HEC Model Output for Existing and Future Conditions, Alternative 2A, Alternative 4, and Alternative 6

Appendix G: HEC Model Output for Recommended Plan

Appendix H: Haestad Calculations for Recommended Plan

Property of
Flood Control District of MC Library
Please Return to
2801 W. Durango
Phoenix, AZ 85009

APPENDIX A: Hydrologic Model: HEC-1 tree, input, portions of output

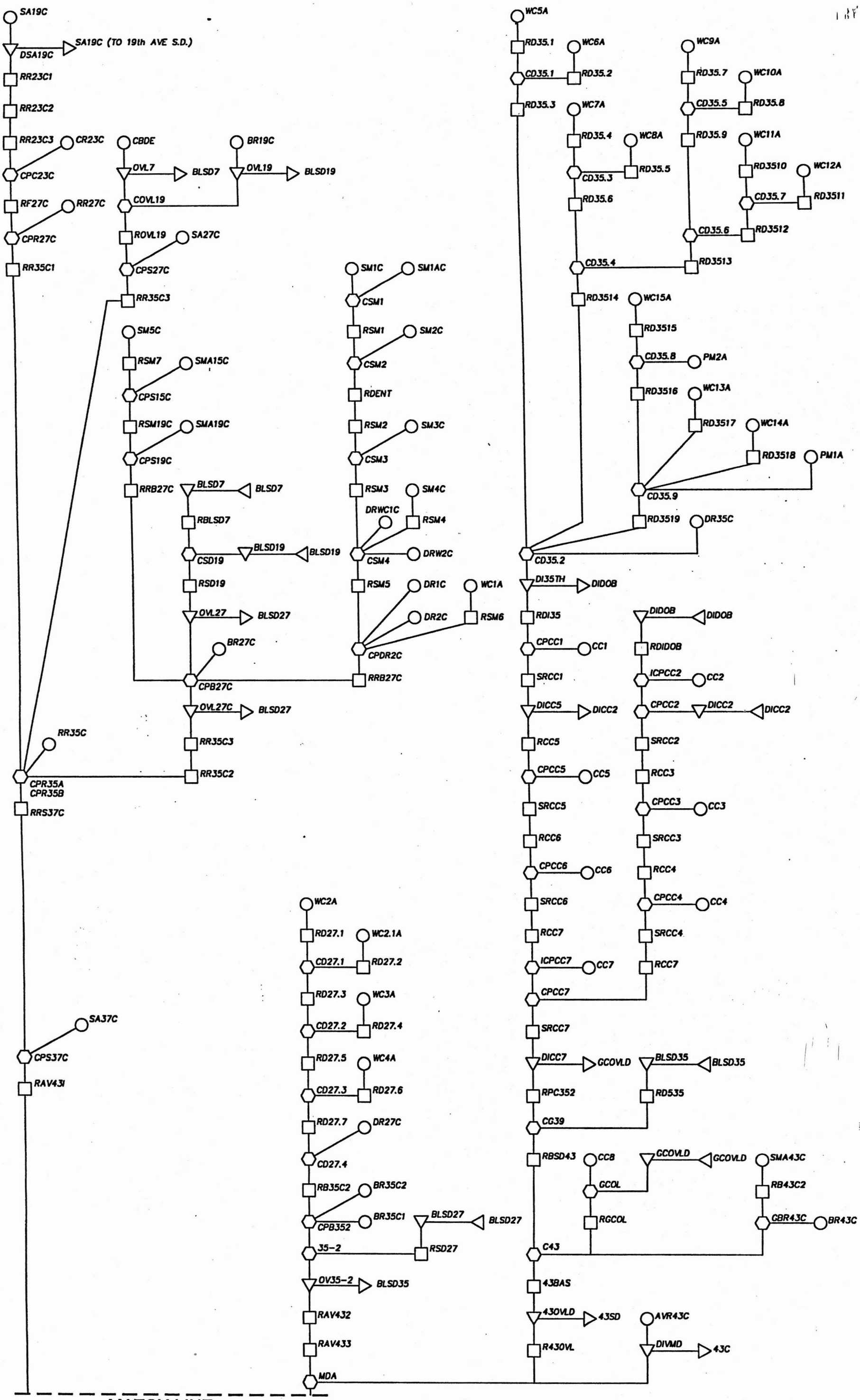
SA19C
SA19C (TO 19th AVE S.D.)
DSA19C
RR23C1
RR23C2
RR23C3
CR23C
CPC23C
RF27C
RR27C
CPR27C
RR35C1
CBDE
OVL7
BLSD7
BR19C
OVL19
BLSD19
COVL19
ROVL19
SA27C
CPS27C
RR35C3
SM5C
RSM7
SMA15C
CPS15C
RSM19C
SMA19C
CPS19C
RRB27C
BLSD7
BLSD7
RBLSD7
CSD19
BLSD19
BLSD19
RSD19
OVL27
BLSD27
BR27C
CPB27C
OVL27C
BLSD27
RR35C3
RR35C2
RR35C
CPR35A
CPR35B
RRS37C
SA37C
CPS37C
RAV43I
SM1C
SM1AC
CSM1
RSM1
SM2C
CSM2
RDENT
RSM2
SM3C
CSM3
RSM3
SM4C
DRWC1C
RSM4
CSM4
DRW2C
RSM5
DR1C
WC1A
DR2C
RSM6
CPDR2C
RRB27C
WC5A
RD35.1
WC6A
CD35.1
RD35.2
RD35.3
WC7A
RD35.4
WC8A
CD35.3
RD35.5
RD35.6
CD35.4
WC9A
RD35.7
WC10A
CD35.5
RD35.8
RD35.9
WC11A
RD3510
WC12A
CD35.7
RD3511
CD35.6
RD3512
RD3513
RD3514
WC15A
RD3515
CD35.8
PM2A
RD3516
WC13A
RD3517
WC14A
RD3518
PM1A
CD35.9
RD3519
DR35C
CD35.2
DI35TH
DIDOB
RDI35
CPCC1
CC1
SRCC1
DICC5
DICC2
RCC5
CPCC5
CC5
SRCC5
RCC6
CPCC6
CC6
SRCC6
RCC7
ICPCC7
CC7
CPCC7
SRCC7
DICC7
GCOVLD
BLSD35
BLSD35
RPC352
RD535
CG39
RBSD43
CC8
GCOVLD
GCOVLD
SMA43C
GCOL
RB43C2
RGCOL
GBR43C
BR43C
C43
43BAS
430VLD
43SD
AVR43C
R430VL
DIVMD
43C
DIDOB
DIDOB
RDIDOB
ICPCC2
CC2
CPCC2
DICC2
DICC2
SRCC2
RCC3
CPCC3
CC3
SRCC3
RCC4
CPCC4
CC4
SRCC4
RCC7
WC2A
RD27.1
WC2.1A
CD27.1
RD27.2
RD27.3
WC3A
CD27.2
RD27.4
RD27.5
WC4A
CD27.3
RD27.6
RD27.7
DR27C
CD27.4
RB35C2
BR35C2
CPB352
BR35C1
BLSD27
BLSD27
35-2
RSD27
OV35-2
BLSD35
RAV432
RAV433
MDA
MATCH LINE

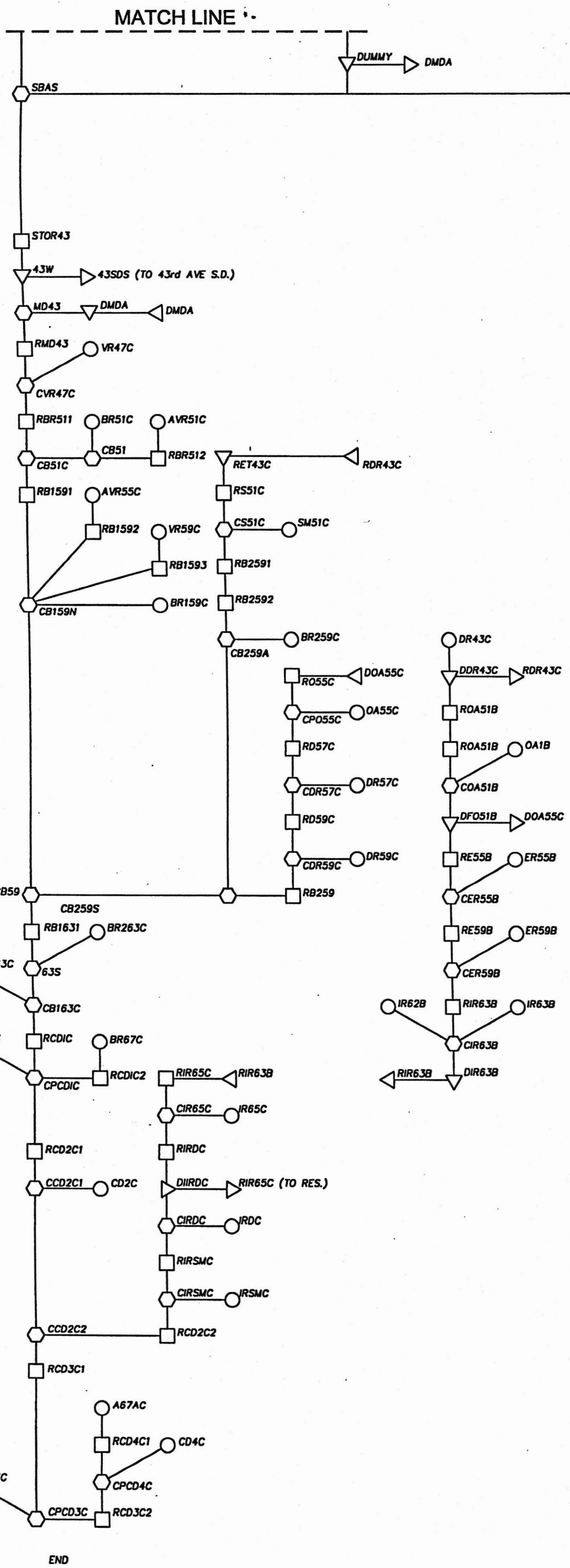

LEGEND

- ○ SUBBASIN RUNOFF COMPONENT
- □ ROUTING COMPONENT
- ⬡ ANALYSIS POINT AND HYDROGRAPH COMBINATION
- △ DIVERSION / RETRIEVAL COMPONENT

MARICOPA DRAIN WATERSHED

HIDDEN VALLEY WATERSHED

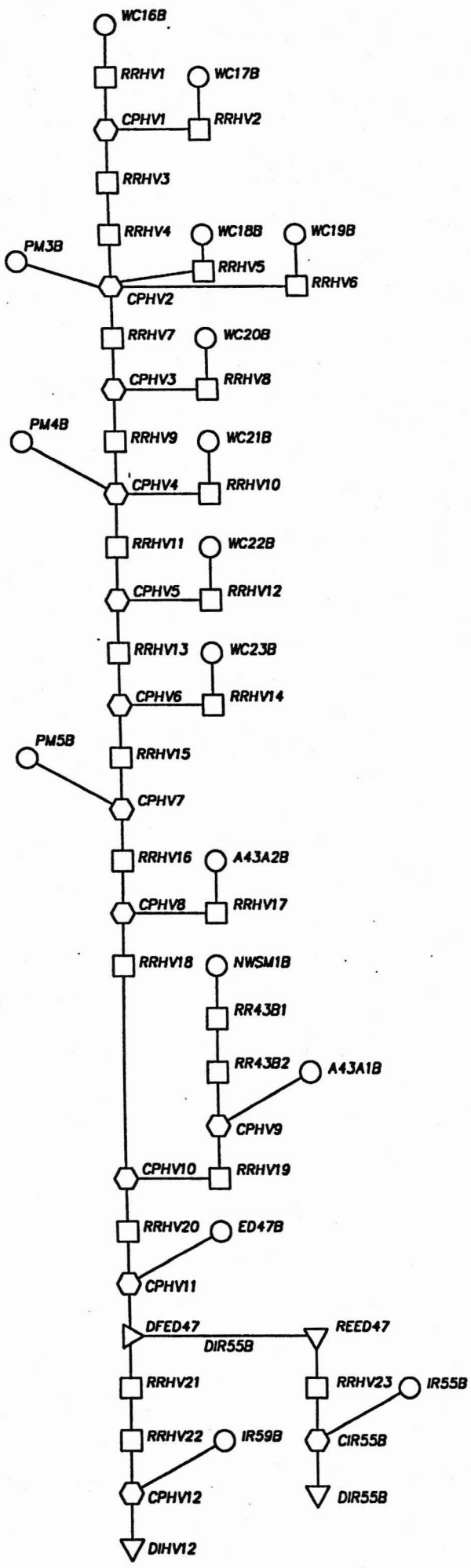

LEGEND

- SUBBASIN RUNOFF COMPONENT
- ROUTING COMPONENT
- ANALYSIS POINT AND HYDROGRAPH COMBINATION
- DIVERSION / RETRIEVAL COMPONENT

SOUTHWEST SOUTHMOUNTAIN WATERSHED

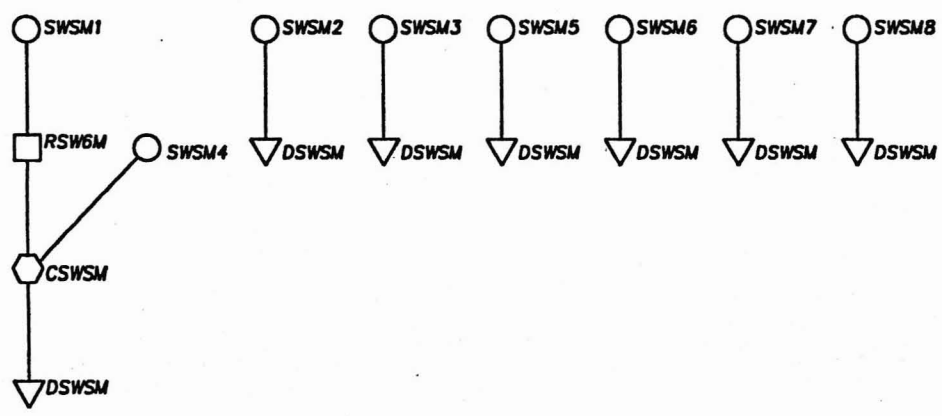

LAVEEN AREA DRAINAGE MASTER STUDY

MARICOPA DRAIN WATERSHED EXISTING CONDITION HYDROLOGY MODEL

FILE NAME: LB2D.DAT

DECEMBER 7, 2000

```
1*****************************************
*                                       *
*   FLOOD HYDROGRAPH PACKAGE  (HEC-1)   *
*             MAY  1991                 *
*          VERSION 4.0.1E               *
*      Lahey F77L-EM/32 version 5.01    *
*        Dodson & Associates, Inc.      *
*  RUN DATE  10/30/00  TIME  14:48:47   *
*                                       *
*****************************************
```

```
*****************************************
*                                       *
*   U.S. ARMY CORPS OF ENGINEERS        *
*   HYDROLOGIC ENGINEERING CENTER       *
*        609 SECOND STREET              *
*     DAVIS, CALIFORNIA 95616           *
*         (916) 551-1748                *
*                                       *
*****************************************
```

```
X    X  XXXXXXX  XXXXX         X
X    X  X       X     X       XX
X    X  X       X             X
XXXXXX  XXXX    X       XXXXX X
X    X  X       X             X
X    X  X       X     X       X
X    X  XXXXXXX  XXXXX         XXX
```

THIS PROGRAM REPLACES ALL PREVIOUS VERSIONS OF HEC-1 KNOWN AS HEC1 (JAN 73), HEC1GS, HEC1DB, AND HEC1KW.

THE DEFINITIONS OF VARIABLES -RTIMP- AND -RTIOR- HAVE CHANGED FROM THOSE USED WITH THE 1973-STYLE INPUT STRUCTURE.
THE DEFINITION OF -AMSKK- ON RM-CARD WAS CHANGED WITH REVISIONS DATED 28 SEP 81. THIS IS THE FORTRAN77 VERSION
NEW OPTIONS: DAMBREAK OUTFLOW SUBMERGENCE , SINGLE EVENT DAMAGE CALCULATION, DSS:WRITE STAGE FREQUENCY,
DSS:READ TIME SERIES AT DESIRED CALCULATION INTERVAL LOSS RATE:GREEN AND AMPT INFILTRATION
KINEMATIC WAVE: NEW FINITE DIFFERENCE ALGORITHM

1 HEC-1 INPUT

```
LINE      ID.....1.....2.....3.....4.....5.....6.....7.....8.....9.....10
   1      ID   LAVEEN ADMS (FINAL HEC-1) 100-YR 24-HR STORM          CBA FILE # 40916-02-30
   2      ID   HIDDEN VALLEY WATERSHED/CHAMPION DRAIN WATERSHED
   3      ID                                                        DATE: SEPTEMBER 12,2000
   4      ID
   5      ID   24-HOUR SCS TYPE II RAINFALL
   6      ID
   7      ID   REVISED SCHEMATIC TO INCLUDE FLOWS IN BOTH 43RD AVE. BASINS
   8      ID
   9      ID   ********************************************************************************
  10      ID   FLOOD INSURANCE STUDY UPDATE
  11      ID   INCLUDE PHYSICAL CHANGES IN THE WATERSHED AS OF MARCH 2000
  12      ID   INCLUDED THE FOLLOWING FACILITIES:
  13      ID     UPSTREAM OF 43RD AVE.  - EXISTING LANDUSE
  14      ID        1- 43RD AVENUE STORM DRAIN, 1000 FT NORTH OF BASELINE TO SALT RIVER
  15      ID        2- CESAR CHAVEZ GOLF COURSE, 35TH AVENUE AND DOBBINS
  16      ID        3- BASELINE STORMDRAIN, FROM 7TH AVE TO 43RD AVE.
  17      ID        4- 43RD AVE DETENTION BASIN AT SOUTHERN AVE.
  18      ID
  19      ID     DOWNSTREAM OF 43RD AVE. - EXISTING LANDUSE
  20      ID        PLAN 2 - PROPOSED CHANNEL
  21      ID
  22      ID   CHANGES BY H&H BRANCH, FLOOD CONTROL DISTRICT OF MARICOPA COUNTY
  23      ID   9/27/00   INPUT FILE NAME LB2D.DAT
  24      *DIAGRAM
  25      IT      5                  500
  26      IO      3      0

  27      KK  IR62B
  28      KM  SUB-BASIN  IR62B -LAND USE - AGRICULTURE;MINOR DEVELOPMENT
  29      KM  24-HOUR TYPE II RAINFALL WAS USED TO FIND TC & R FOR THIS BASIN
  30      KM  THIS BASIN USED RAINFALL REDUCTION FACTOR OF .97
  31      BA   .550
  32      IN    30
  33      KM  RAINFALL DEPTH OF 4.20 WAS SPACIALLY REDUCED AS SHOWN ON THE PB RECORD
  34      PB  4.074
  35      KM  THE FOLLOWING PC RECORDS REPRESENT A 24-HR SCS TYPE II STORM
  36      PC  .000  .005  .011  .016  .022  .028  .035  .041  .048  .056
  37      PC  .068  .071  .080  .089  .098  .109  .120  .133  .147  .163
  38      PC  .181  .204  .235  .283  .663  .735  .772  .799  .820  .838
  39      PC  .854  .868  .880  .891  .902  .912  .921  .929  .937  .945
  40      PC  .952  .959  .965  .972  .978  .984  .989  .995 1.000
  41      LG  .500  .000 5.000  .371  .000
  42      UC  .850  .594
  43      UA    0     3     9    18    28    42    59    73    87    92
  44      UA  100
          *

  45      KK  DR43C
  46      KM  SUB-BASIN DR43C -LAND USE- AGRICULTURE, DESERT HILLS; MINOR DEVELOPMENT
  47      KM  24-HOUR TYPE II RAINFALL WAS USED TO FIND TC & R FOR THIS BASIN
  48      KM  THIS BASIN USED RAINFALL REDUCTION FACTOR OF .90
  49      BA   .940
  50      IN    30
  51      KM  RAINFALL DEPTH OF 4.2 WAS SPACIALLY REDUCED AS SHOWN ON THE PB RECORD
```



```
LINE      ID.....1.....2.....3.....4.....5.....6.....7.....8.....9.....10
  52      PB  3.780
  53      KM  THE FOLLOWING PC RECORDS REPRESENTS A 24-HR SCS TYPE II STORM
  54      PC  .000  .005  .011  .016  .022  .028  .035  .041  .048  .056
  55      PC  .068  .071  .080  .089  .098  .109  .120  .133  .147  .163
  56      PC  .181  .204  .235  .283  .663  .735  .772  .799  .820  .838
  57      PC  .854  .868  .880  .891  .902  .912  .921  .929  .937  .945
  58      PC  .952  .959  .965  .972  .978  .984  .989  .995 1.000
  59      LG  .360  .053 4.450  .391 20.000
  60      UC  .617  .325
  61      UA    0     3     5     8    12    20    43    75    90    96
  62      UA  100
          *

  63      KK  DDR43C
  64      KM  SPLIT FLOW.RESULTANT HYDROGRAPH IS THE ESTIMATED FLOW THAT DRAINS THE TO WEST
  65      KM  OF THE SOUTHWEST CORNER OF 43RD AVENUE AND DOBBINS ROAD
  66      DT  RDR43C
  67      DI    0    50   100   119   300   500   600   800   900
  68      DQ    0    50   100   119   181   381   481   681   781
          *

  69      KK  ROA51B
  70      KM  ROUTE SPLIT FLOW FROM SUB-BASIN DR43B TO COMPUTATION POINT COA51B (1ST REACH)
  71      RS    10   ELEV  1041
  72      RC  0.07  0.07  0.07  2790 0.0042
  73      RX     0   300   440   480   560   590   615   640
  74      RY  1042  1041  1041  1041  1041  1041  1041  1042
          *

  75      KK  ROA51B
  76      KM  ROUTE SPLIT FLOW FROM SUB-BASIN DR43B TO COMPUTATION POINT COA51B (2ND REACH)
  77      RS    24   ELEV    -1
  78      RC 0.065 0.065 0.065  3600 0.0017
  79      RX     0    90   320   490   690  1060  1950  1960
  80      RY  1038 1037.8 1037.4  1037  1037 1037.1 1037.8  1038
          *

  81      KK  OA51B
  82      KM  SUB-BASIN  OA51B-LAND USE - AGRICULTURE, RURAL DEVELOPMENT
  83      KM  24-HOUR TYPE II RAINFALL WAS USED TO FIND TC & R FOR THIS BASIN
  84      KM  THIS BASIN USED RAINFALL REDUCTION FACTOR OF .97
  85      BA  1.370
  86      IN    30
  87      KM  RAINFALL DEPTH OF 4.2 WAS SPACIALLY REDUCED AS SHOWN ON THE PB RECORD
  88      PB  4.074
  89      PC  .000  .005  .011  .016  .022  .028  .035  .041  .048  .056
  90      PC  .068  .071  .080  .089  .098  .109  .120  .133  .147  .163
  91      PC  .181  .204  .235  .283  .663  .735  .772  .799  .820  .838
  92      PC  .854  .868  .880  .891  .902  .912  .921  .929  .937  .945
  93      PC  .952  .959  .965  .972  .978  .984  .989  .995 1.000
  94      LG  .360  .098 5.300  .312 10.0
  95      UC 0.883  .320
  96      UA    0     3     9    18    28    42    59    73    87    92
  97      UA  100
          *
```

1 HEC-1 INPUT

```
LINE      ID.....1.....2.....3.....4.....5.....6.....7.....8.....9.....10
  98      KK  COA51B
  99      KM  COMBINE ROUTED SPLIT FLOW FROM SUB-BASIN DR43C TO RUNOFF FROM SUB-BASIN
 100      KM  OA51B
 101      HC    2
          *

 102      KK  DFO51B
 103      KM  RATE CHANNEL CROSS-SECTION AT CONCENTRATION POINT OA51B FOR SPLIT FLOW.
 104      KM  DIVERTED FLOW IS ROUTED THROUGH CHAMPION DRAIN WATERSHED
 105      DT  DOA55C
 106      DI     0     8    24    93   219   461   852  1384
 107      DQ     0     4    11    43   102   262   479   735
          *

 108      KK  RE55B
 109      KM  ROUTE SPLIT FLOW FROM SUB-BASIN OA51B TO COMPUTATION POINT CRE55B
 110      RS    18   ELEV    -1
 111      RC  0.07  0.07  0.07  3840 0.0013
 112      RX     0    30   370   530   680   860  1120  1260
 113      RY  1032  1030 1029.7 1029.4 1029.2  1029 1028.8  1031
          *

 114      KK  ER55B
 115      KM  SUB-BASIN ER55B-LAND USE - AGRICULTURE;MINOR DEVELOPMENT
 116      KM  24-HOUR TYPE II RAINFALL WAS USED TO FIND TC & R FOR THIS BASIN
 117      KM  THIS BASIN USED RAINFALL REDUCTION FACTOR OF .97
 118      BA   .250
 119      LG   .500  .000 7.800  .150  .000
 120      UC   .983  .669
 121      UA     0     3     9    18    28    42    59    73    87    92
 122      UA   100
          *
```

```
KK  CER55B
KM   COMBINE ROUTED DIVERTED FLOW FROM SUB-BASIN OA51B TO RUNOFF FROM SUBASIN
KM   ER55B
HC      2
*

KK   RE59B
KM   ROUTE FLOW FROM COMPUTATION POINT CRE55B TO COMPUTATION POINT CER59B
RS      7    ELEV      -1
RC   0.07    0.07    0.07    2600   0.002
RX      0      30      50      90     180     270     360     860
RY 1026.5    1024    1024    1024    1025  1025.3  1025.5  1026.5
*

KK   ER59B
KM   SUB-BASIN ER59B-LAND USE - AGRICULTURE;MINOR DEVELOPMENT
KM   24-HOUR TYPE II RAINFALL WAS USED TO FIND TC & R FOR THIS BASIN
KM   THIS BASIN USED RAINFALL REDUCTION FACTOR OF .97
BA    .280
LG    .500    .000   3.790    .454    .000
UC    .933    .586
```


1

HEC-1 INPUT

```
LINE      ID.....1.....2.....3.....4.....5.....6.....7.....8.....9.....10
UA      0       3       9      18      28      42      59      73      87      92
UA    100
*

KK  CER59B
KM   COMBINE ROUTED FLOW FROM COMPUTATION POINT CRE55B TO RUNOFF FROM SUBASIN
KM   ER59B
HC      2
*

KK  RIR63B
KM   ROUTE FLOW FROM COMPUTATION POINT CER59B TO COMPUTATION POINT CIR63B. NOTE
KM   END POINTS OF CROSSECTION WERE ADJUSTED SO THAT FLOW WOULD BE CONTAINED
KM   WITHIN THE GIVEN ROUTING REACH
RS      7    ELEV      -1
RC   0.07    0.07    0.07    3100   0.002
RX      0      40      80     120     160     210     290     360
RY 1022.7    1020  1019.7  1019.7    1020  1020.2  1020.9  1022.7
*

KK   IR63B
KM   SUB-BASIN IR63B-LAND USE - AGRICULTURE;MINOR DEVELOPMENT
KM   24-HOUR TYPE II RAINFALL WAS USED TO FIND TC & R FOR THIS BASIN
KM   THIS BASIN USED RAINFALL REDUCTION FACTOR OF .97
BA    .130
LG    .500    .000   3.500    .470    .000
UC    .767    .647
UA      0       3       9      18      28      42      59      73      87      92
UA    100
*

KK  CIR63B
KM   COMBINE ROUTED FLOW FROM COMPUTATION POINT CER59B AND RUNOFF OF SUB-BASINS
KM   IR63B AND IR62B
HC      3
*

KK  DIR63B
KM   COMPUTATION POINT CIR63B IS LOCATED ON THE WESTERN EDGE OF THE STUDY AREA
KM   WHICH IS BOUNDED BY A CONCRETE IRRIGATION CANAL AND EARTHEN ROADWAY. THE
KM   EARTHEN ROADWAY HAS A CAPACITY OF APPROXIMATELY 45 CFS BEFORE THE
KM   IRRIGATION  CANAL IS OVERTOPPED AND FLOW CONTINUES ITS NATURAL FLOW
KM   PATH TO THE WEST. THE DIVERTED FLOW OF APPROXIMATELY 45 CFS IS ROUTED
KM   TO THE CHAMPION DRAIN WATERSHED
DT  RIR63B
DI      0      45     100     200     400     600     800
DQ      0      45      45      45      45      45      45
*

KK   SA19C
KM    !!!!!!! START CHAMPION DRAIN WATERSHED  !!!!!!!!!!!!!!!!!!!!!!!!!!!!!!!!
KM   SUB-BASIN SA19C-LAND USE- URBAN,AGRICULTURE
KM   24-HOUR TYPE II RAINFALL WAS USED TO FIND TC & R FOR THIS BASIN
KM   THIS BASIN USED RAINFALL REDUCTION FACTOR OF .90
BA    .480
```


1

HEC-1 INPUT

```
LINE      ID.....1.....2.....3.....4.....5.....6.....7.....8.....9.....10
IN     30
KM   RAINFALL DEPTH OF 4.20 WAS SPACIALLY REDUCED AS SHOWN BY THE PB RECORD
PB   3.780
KM   THE FOLLOWING PC RECORD USED A 24-HOUR SCS TYPE II STORM
PC    .000    .005    .011    .016    .022    .028    .035    .041    .048    .056
PC    .068    .071    .080    .089    .098    .109    .120    .133    .147    .163
PC    .181    .204    .235    .283    .663    .735    .772    .799    .820    .838
PC    .854    .868    .880    .891    .902    .912    .921    .929    .937    .945
PC    .952    .959    .965    .972    .978    .984    .989    .995   1.000
LG    .400    .093   3.750    .484   5.800
UC    .700    .599
UA      0       3       9      18      28      42      59      73      87      92
UA    100
*

KK  DSA19C
KM   DIVERT CAPACITY OF STORMDRAIN AT CONCENTRARION POINT
DT   SA19C
DI     10      30      70     100     200     300
DQ     10      30      70      70      70      70
*

KK  RR23C1
KM   ROUTE FLOW FROM SUB-BASIN SA19C TO COMPUTATION POINT CPC23C ( 1ST REACH )
RS      4    ELEV      -1
RC  0.035   0.035   0.035    1200  0.0083    1076
RX      0      50     120     220    1020    1080    1180    1250
RY   1076  1075.8  1075.8  1075.8  1075.8  1075.8  1075.8    1076
*

KK  RR23C2
KM   ROUTE FLOW FROM SUB-BASIN SA19C TO COMPUTATION POINT CPC23C ( 2ND REACH )
RS      8    ELEV      -1
RC  0.100   0.100   0.100    1600  0.0088    1066
RX      0     150     560     820    1230    1470    1700    1870
RY   1066    1064    1064  1063.6  1063.5    1064    1064    1066
*

KK  RR23C3
KM   ROUTE FLOW FROM SUB-BASIN SA19C TO COMPUTATION POINT CPC23C ( 3RD REACH )
RS     10    ELEV      -1
RC  0.070   0.070   0.070    1900  0.0053    1056
RX      0      40     110     590    1210    1490    1770    2040
RY   1058    1054    1054  1052.8  1052.8    1054  1054.8    1056
*

KK  CR23C
KM   SUB-BASIN CR23C-LAND USE- URBAN,AGRICULTURE
KM   24-HOUR TYPE II RAINFALL WAS USED TO FIND TC & R FOR THIS BASIN
KM   THIS BASIN USED RAINFALL REDUCTION FACTOR OF .90
BA    .580
LG    .320    .114   5.550    .234   3.300
UC    .433    .214
UA      0       3       9      18      28      42      59      73      87      92
UA    100
*
```


1

HEC-1 INPUT

```
LINE      ID.....1.....2.....3.....4.....5.....6.....7.....8.....9.....10

KK  CPC23C
KM   COMBINE ROUTED FLOW FROM SUB-BASIN SA19C TO RUNOFF FROM SUB-BASIN CR23C
HC      2
*

KK   RF27C
KM   ROUTE FLOW FROM COMPUTATION POINT CPC23C TO COMPUTATION POINT CPR27C
RS     11    ELEV      -1
RC  0.070   0.070   0.070    3000  0.0020    1049
RX      0     200     460     680     880     985    1220    2110
RY   1049  1048.2    1048    1047    1047    1048    1048    1049
*

KK   RR27C
KM   SUB-BASIN RR27C-LAND USE- URBAN,AGRICULTURE
KM   24-HOUR TYPE II RAINFALL WAS USED TO FIND TC & R FOR THIS BASIN
KM   THIS BASIN USED RAINFALL REDUCTION FACTOR OF .90
BA    .480
LG    .460    .036   3.780    .432    .000
UC    .633    .314
UA      0       3       9      18      28      42      59      73      87      92
UA    100
*

KK  CPR27C
KM   COMBINE ROUTED FLOW FROM COMPUTATION POINT CPC23C WITH RUNOFF FROM SUB-
KM   BASIN RR27C
HC      2
*

KK  RR35C1
KM   ROUTE FLOW FROM COMPUTATION POINT CPR27C TO COMPUTATION POINT CPR35C
RS     18    ELEV      -1
RC  0.070   0.070   0.070    5320  0.0030    1140
RX      0     270     540     630     790     870    1260    1300
RY   1140    1138    1137    1137    1137    1137    1138    1140
*

KK   CBDE
KM   BASIN EAST OF CENTRAL 7th AVE FROM BASELINE TO NORTH OF DOBBINS
BA   0.17
LG    .35     .25     4.3     .33       9
UC    .65     .65
UA      0       3       9      18      28      42      59      73      87      92
UA    100
```

```
                +
  263           KK   OVL7
  264           KM   DIVERT FLOWS IN BASELINE STORMDRAIN
  265           DT   BLSD7
  266           DI      0     250    1000   10000
  267           DQ      0     250     250     250
                +
                + WITHOUT 7TH AVE STORMDRAIN THERE ALL THE FLOWS FROM CBDE WILL ENTER INTO
                +  BASELINE STORMDRAIN, THERSFORE THERE IS NO OVERLAND ROUTING NEEDED.
                +
                + KK ROVL7
                + KM       Route overland flows in roadside ditch to BR19C (BASELINE & 19TH AVE)
                + RD  5200   0.008   0.030                TRAP    10.0    20.0
                +

1
                                                HEC-1 INPUT

  268           KK   BR19C
  269           KM   SUB-BASIN BR19C-LAND USE - AGRICULTURE;MINOR DEVELOPMENT
  270           KM   24-HOUR TYPE II RAINFALL WAS USED TO FIND TC & R FOR THIS BASIN
  271           KM   THIS BASIN USED RAINFALL REDUCTION FACTOR OF .90
  272           BA    .390
  273           LG    .430    .027   4.050    .619   3.300
  274           UC    .517    .319
  275           UA       0       3       9      18      28      42      59      73      87      92
  276           UA     100
                +
  277           KK   OVL19
  278           KM   THE CAPACITY OF THE BASELINE STORMDRAIN IS 300 CFS, 250 CFS IS ALREADY IN THE
  279           KM   THE STORMDRAIN FROM 7TH AVE, THEREFORE THERE IS ONLY ROOM FOR AN EXTRA 50 CFS
  280           DT   BLSD19
  281           DI      0      50    1000
  282           DQ      0      50      50
                +
  283           KK  COVL19
  284           KM   COMBINE THE OVERLAND FLOWS FROM 19TH AVE AND 7TH AVE
  285           HC      2
                +
  286           KK  ROVL19
  287           KM   ROUTE FLOW FROM SUB-BASIN BR19C TO COMPUTATION POINT CPS27C
  288           RS     33     ELEV      -1
  289           RC  0.070   0.070   0.070   7400  0.0077    1086
  290           RX      0     730    1080    1340    1710    2380    2850    3350
  291           RY   1086  1085.9  1085.7  1085.5    1085  1085.6  1085.6    1086
                +
  292           KK   SA27C
  293           KM   SUB-BASIN SA27C-LAND USE - AGRICULTURE;MINOR DEVELOPMENT
  294           KM   24-HOUR TYPE II RAINFALL WAS USED TO FIND TC & R FOR THIS BASIN
  295           KM   THIS BASIN USED RAINFALL REDUCTION FACTOR OF .90
  296           BA    .623
  297           LG    .500    .000   3.520    .476    .000
  298           UC    .683    .444
  299           UA       0       3       9      18      28      42      59      73      87      92
  300           UA     100
                +
  301           KK   CPS27C
  302           KM    COMBINE ROUTED FLOW FROM SUB-BASIN BR19C TO RUNOFF FROM SUB-BASIN SA27C
  303           HC      2
                +
  304           KK   RR35C3
  305           KM   ROUTE FLOW FROM CONCENTRATION POINT CPS27C TO CONCENTRATION POINT CPR35C
  306           RS      8     ELEV      -1
  307           RC    .07     .07     .07    3400   .0072    1042
  308           RX      0     200     420     520     630     750    1120    1360
  309           RY   1042  1041.5    1041  1040.8  1040.9    1041  1041.5    1042
                +

1
                                                HEC-1 INPUT

  310           KK   CPR35A
  311           KM    COMBINE ROUTED FLOW FROM  COMPUTATION POINTS CPR27C AND CPS27C
  312           HC      2
                +
  313           KK    SM5C
  314           KM   SUB-BASIN SM5C-LAND USE-URBAN
  315           KM   24-HOUR TYPE II RAINFALL WAS USED TO FIND TC & R FOR THIS BASIN
  316           KM   THIS BASIN USED RAINFALL REDUCTION FACTOR OF .90
  317           BA    .200
  318           LG    .200    .349   4.300    .555  18.000
  319           UC    .383    .355
  320           UA       0       5      16      30      65      77      84      90      94      97
  321           UA     100
                +
```

```
  322           KK    RSM7
  323           KM   ROUTE FLOW FROM SUB-BASIN SM5C TO COMPUTATION POINT CPS15C
  324           RS     10     ELEV      -1
  325           RC  0.070   0.070   0.070   4000  0.0145
  326           RX      0     110     180     270     330     420     510     600
  327           RY   1180    1179  1178.5    1178    1178  1178.5    1179    1180
                +
  328           KK   SMA15C
  329           KM    SUB-BASIN SMA15C-LAND USE- URBAN,AGRICULTURE
  330           KM   24-HOUR TYPE II RAINFALL WAS USED TO FIND TC & R FOR THIS BASIN
  331           KM   THIS BASIN USED RAINFALL REDUCTION FACTOR OF .90
  332           BA    .360
  333           LG    .400    .045   3.700    .547    .000
  334           UC    .417    .292
  335           UA       0       3       9      18      28      42      59      73      87      92
  336           UA     100
                +
  337           KK   CPS15C
  338           KM    COMBINE ROUTED FLOW FROM SUB-BASIN SM5C WITH RUNOFF FROM SUB-BASIN SMA15C
  339           HC      2
                +
  340           KK   RSM19C
  341           KM   ROUTE FLOW FROM SUB-BASIN SA15C TO COMPUTATION POINT CPS19C
  342           RS      4     ELEV
  343           RC  0.070   0.070   0.070    2030    0.01    1140
  344           RX      0      50     110     160     210     260     350     430
  345           RY   1140  1139.5  1139.2  1139.2  1139.2  1139.2  1139.5    1140
                +
  346           KK   SMA19C
  347           KM    SUB-BASIN SMA19C-LAND USE - AGRICULTURE;MINOR DEVELOPMENT
  348           KM   24-HOUR TYPE II RAINFALL WAS USED TO FIND TC & R FOR THIS BASIN
  349           KM   THIS BASIN USED RAINFALL REDUCTION FACTOR OF .90
  350           BA    .156
  351           LG    .500    .000   4.200    .777    .000
  352           UC    .833   1.212
  353           UA       0       3       9      18      28      42      59      73      87      92
  354           UA     100

1
                                                HEC-1 INPUT

  355           KK   CPS19C
  356           KM    COMBINE ROUTED FLOW FROM SUB-BASIN SMA15C TO RUNOFF FROM SUB-BASIN SMA19C
  357           HC      2
                +
  358           KK   RRB27C
  359           KM   ROUTE FLOW FROM COMPUTATION POINT CPS19C TO COMPUTATION POINT CPB27C
  360           RS     22     ELEV      -1
  361           RC  0.070   0.070   0.070    7400  0.0090    1110
  362           RX      0     260     550     770     920    1170    1320    1500
  363           RY   1110    1109    1109    1108    1108  1107.8    1108    1110
                +
  364           KK    SM1C
  365           KM   SUB-BASIN SM1C-LAND USE- NATURAL DESERT(MOUNTAIN)
  366           KM   24-HOUR TYPE II RAINFALL WAS USED TO FIND TC & R FOR THIS BASIN
  367           KM   THIS BASIN USED RAINFALL REDUCTION FACTOR OF .90
  368           BA   1.840
  369           LG    .150    .346   3.800    .623  50.000
  370           UC    .450    .220
  371           UA       0       3       5       8      12      20      43      75      90      96
  372           UA     100
                +
  373           KK   SM1AC
  374           KM   SUB-BASIN SM1AC-LAND USE- NATURAL DESERT(MOUNTAIN)
  375           KM   24-HOUR TYPE II RAINFALL WAS USED TO FIND TC & R FOR THIS BASIN
  376           KM   THIS BASIN USED RAINFALL REDUCTION FACTOR OF .90
  377           BA    .280
  378           LG    .150    .343   4.050    .528  10.000
  379           UC    .367    .288
  380           UA       0       3       5       8      12      20      43      75      90      96
  381           UA     100
                +
  382           KK    CSM1
  383           KM   COMBINE FLOW FROM SUB-BASIN SM1C WITH SM1AC AT COMPUTATOIN
  384           KM   POINT CSM1
  385           HC      2
                +
  386           KK    RSM1
  387           KM   ROUTE FLOW FROM COMPUTATION POINT CSM1  TO COMPUTATION POINT CSM2
  388           RS      2     ELEV      -1
  389           RC  0.035   0.035   0.035    4300  0.017
  390           RX      0      90     160     230     310     380     490     590
  391           RY   1390    1380    1377  1375.5    1377    1380    1383    1390
                +
  392           KK    SM2C
  393           KM   SUB-BASIN SM2C-LAND USE- NATURAL DESERT(MOUNTAIN)
  394           KM   24-HOUR TYPE II RAINFALL WAS USED TO FIND TC & R FOR THIS BASIN
  395           KM   THIS BASIN USED RAINFALL REDUCTION FACTOR OF .90
                * KO     1       2
  396           BA   2.190
  397           LG    .150    .350   3.310    .820  86.000
  398           UC    .383    .134
  399           UA       0       3       5       8      12      20      43      75      90      96
```

```
1                                    HEC-1 INPUT
LINE      ID.....1.....2.....3.....4.....5.....6.....7.....8.....9.....10
  400     UA    100
  401     KK   CSM2
  402     KM   COMBINE RUNOFF FROM SUB-BASIN SM2C TO ROUTED FLOW FROM COMPUTATION
  403     KM   POINT CSM1
  404     HC      2
  405     KK   RDENT
  406     KM   ROUTE INFLOW HYDROGRAPH THROUGH SOUTH MOUNTAIN DETENTION BASIN
  407     RS     1    ELEV     -1
  408     SA  2.30    7.80   15.91   19.96   24.08   28.27   30.45   31.91
  409     SE  1292    1294    1300    1305    1310    1315    1318    1320
  410     SL  1298    7.06    0.58     0.5
  411     SS  1318     200     2.7     1.5
  412     KK   RSM2
  413     KM   ROUTE FLOW FROM COMPUTATOIN POINT CSM2 TO COMPUTATOIN POINT CSM3
  414     RS    12    ELEV     -1
  415     RC 0.040   0.040   0.040    6600   0.019    1228
  416     RX     0      70     100     140     160     190     240     320
  417     RY  1228  1227.5    1227    1226    1228  1228.5    1229    1230
  418     KK   SM3C
  419     KM   SUB-BASIN SM3C-LAND USE- NATURAL DESERT(HILLSLOPE,MOUNTAIN),MINOR DEVELOPMENT
  420     KM   24-HOUR TYPE II RAINFALL WAS USED TO FIND TC & R FOR THIS BASIN
  421     KM   THIS BASIN USED RAINFALL REDUCTION FACTOR OF .90
  422     BA   .480
  423     LG   .160    .348   3.850    .607   1.500
  424     UC   .333    .159
  425     UA     0       3       5       8      12      20      43      75      90      96
  426     UA   100
  427     KK   CSM3
  428     KM   COMBINE RUNOFF FROM SUB-BASIN SM3C TO ROUTED FLOW FROM COMPUTATION
  429     KM   POINT CSM2
  430     HC      2
  431     KK   RSM3
  432     KM   ROUTE FLOW FROM COMPUTATION POINT CSM3 TO COMPUTATION POINT CSM4
  433     RS     4    ELEV     -1
  434     RC 0.040   0.040   0.040    3000  0.0095
  435     RX     0     120     190     270     330     400     470     530
  436     RY  1178  1177.5    1177    1176    1176    1177  1177.5    1178
  437     KK   SM4C
  438     KM   SUB-BASIN SM4C-LAND USE-URBAN
  439     KM   24-HOUR TYPE II RAINFALL WAS USED TO FIND TC & R FOR THIS BASIN
  440     KM   THIS BASIN USED RAINFALL REDUCTION FACTOR OF .90
  441     BA   .240
  442     LG   .260    .350   4.600    .592  14.400
  443     UC   .417    .387
  444     UA     0       5      16      30      65      77      84      90      94      97
  445     UA   100
```



```
1                                    HEC-1 INPUT
LINE      ID.....1.....2.....3.....4.....5.....6.....7.....8.....9.....10
  446     KK   RSM4
  447     KM   ROUTE FLOW FROM SUB-BASIN SM4C TO COMPUTATION POINT CSM4
  448     RS     2    ELEV     -1
  449     RC 0.035   0.035   0.035    1200   0.012
  450     RX     0      50      80     110     130     160     180     200
  451     RY  1170  1169.5    1169  1168.5    1168  1168.5    1169    1170
  452     KK   DRW2C
  453     KM   SUB-BASIN DRW2C-LAND USE- NATURAL DESERT(HILLSLOPE,MOUNTAIN)
  454     KM   24-HOUR TYPE II RAINFALL WAS USED TO FIND TC & R FOR THIS BASIN
  455     KM   THIS BASIN USED RAINFALL REDUCTION FACTOR OF .90
  456     BA   .530
  457     LG   .150    .340   3.250    .859  30.000
  458     UC   .517    .377
  459     UA     0       3       5       8      12      20      43      75      90      96
  460     UA   100
  461     KK  DRWC1C
  462     KM   SUB-BASIN DRWC1C-LAND USE-AGRICULTURE
  463     KM   24-HOUR TYPE II RAINFALL WAS USED TO FIND TC & R FOR THIS BASIN
  464     KM   THIS BASIN USED RAINFALL REDUCTION FACTOR OF .90
  465     BA   .120
  466     LG   .500    .000   4.250    .727    .000
  467     UC   .600    .720
  468     UA     0       3       9      18      28      42      59      73      87      92
  469     UA   100
  470     KK   CSM4
  471     KM   COMBINE RUNOFF FROM SUB-BASINS DRW2C AND DRWC1C WITH ROUTED FLOW FROM SM4C
  472     KM   AND COMPUTATION POINT CSM3
  473     HC      4
  474     KK   RSM5
  475     KM   ROUTE FLOW FROM COMPUTATION POINT CSM4 TO COMPUTATION POINT CSM5
  476     RS     1    ELEV     -1
  477     RC 0.045   0.045   0.045    1800  0.0078
  478     RX     0      80     130     160     180     190     220     260
  479     RY  1160    1159  1158.5    1158    1156    1156    1158    1160
  480     KK   DR1C
  481     KM   SUB-BASIN DR1C-LAND USE-NATURAL DESERT(HILLSLOPE)
  482     KM   24-HOUR TYPE II RAINFALL WAS USED TO FIND TC & R FOR THIS BASIN
  483     KM   THIS BASIN USED RAINFALL REDUCTION FACTOR OF .90
  484     BA   .160
  485     LG   .150    .265   5.300    .198    .000
  486     UC   .417    .442
  487     UA     0       3       5       8      12      20      43      75      90      96
  488     UA   100
```



```
1                                    HEC-1 INPUT
LINE      ID.....1.....2.....3.....4.....5.....6.....7.....8.....9.....10
  489     KK   WC1A
  490     KM   SUB-BASIN WC1A-LAND USE- NATURAL DESERT(HILLSLOPE)
  491     KM   24-HOUR TYPE II RAINFALL WAS USED TO FIND TC & R FOR THIS BASIN
  492     KM   THIS BASIN USED RAINFALL REDUCTION FACTOR OF .90
  493     BA   .250
  494     LG   .150    .264   4.680    .217    40.0
  495     UC   .400    .404
  496     UA     0       3       5       8      12      20      43      75      90      96
  497     UA   100
  498     KK   RSM6
  499     KM   ROUTE FLOW FROM SUB-BASIN WC1A TO COMPUTATION POINT CPDR2C
  500     RS     1    ELEV     -1
  501     RC 0.045   0.045   0.045    1150   0.012    1150
  502     RX     0      30      50      70      90     110     130     170
  503     RY  1152    1151    1150    1148    1146    1146    1148    1150
  504     KK   DR2C
  505     KM   SUB-BASIN DR2C-LAND USE- NATURAL DESERT(HILLSLOPE),AGRICULTURAL
  506     KM   24-HOUR TYPE II RAINFALL WAS USED TO FIND TC & R FOR THIS BASIN
  507     KM   THIS BASIN USED RAINFALL REDUCTION FACTOR OF .90
  508     BA   .050
  509     LG   .150    .325   4.255    .423    .000
  510     UC   .350    .318
  511     UA     0       3       5       8      12      20      43      75      90      96
  512     UA   100
  513     KK  CPDR2C
  514     KM   COMBINE FLOW FROM SUB-BASINS DR2C AND DR1C TO ROUTED FLOW FROM SUB-BASIN WC1A
  515     KM   AND COMPUTATION POINT CSM4 (JUST WEST OF 27TH AVE.)
  516     HC      4
  517     KK  RRB27C
  518     KM   ROUTE FLOW FROM COMPUTATION POINT CPDR2C TO COMPUTATION POINT CPB27C
  519     RS    15    ELEV     -1
  520     RC 0.070   0.070   0.070    7400   0.009    1110
  521     RX     0     260     550     770     920    1170    1320    1500
  522     RY  1110    1109    1109    1108    1108  1107.8    1108    1110
  523     KK   BR27C
  524     KM   SUB-BASIN BR27C-LAND USE - AGRICULTURE;MINOR DEVELOPMENT
  525     KM   24-HOUR TYPE II RAINFALL WAS USED TO FIND TC & R FOR THIS BASIN
  526     KM   THIS BASIN USED RAINFALL REDUCTION FACTOR OF .90
  527     BA   .780
  528     LG   .500    .000   4.150    .695    .000
  529     UC   .700    .416
  530     UA     0       3       9      18      28      42      59      73      87      92
  531     UA   100
```



```
1                                    HEC-1 INPUT
LINE      ID.....1.....2.....3.....4.....5.....6.....7.....8.....9.....10
  532     KK   BLSD7
  533     KM   RETRIEVE BASELINE STORMDRAIN FROM 7TH AVE.
  534     DR   BLSD7
  535     KK  RBLSD7
  536     KM   ROUTE HYDROGRAPH THROUGH BASELINE STORMDRAIN TO OUTLET OF BR19C
  537     RD   5750   .0080    .013            CIRC     5.5
  538     KK  BLSD19
  539     KM   RETRIEVE BASELINE STORMDRAIN AT 19TH AVE.
  540     DR  BLSD19
```

```
541          KK  CSD19
542          KM  COMBINE STORMDRAIN FLOWS FROM 7TH AVE AND 19TH AVE.
543          HC      2
             *

544          KK  RSD19
545          KM  ROUTE STORMDRAIN FROM 19TH AVE TO 27TH AVE
546          RD   5280    .004    .013              CIRC       8
             *

547          KK  OVL27
548          KM  BASELINE STORMDRAIN DOWNSIZES TO FORCE FLOWS INTO A FUTURE BASIN.  MAXIMUM
549          KM  CAPACITY IS 156 CFS
550          KM  DIVERT BASELINE STORMDRAIN FLOWS
551          DT  BLSD27
552          DI      0     156    1000   10000
553          DQ      0     156     156     156
             *

554          KK  CPB27C
555          KM  COMBINE ROUTED FLOW FROM COMPUTATION POINT CPS19C TO RUNOFF FROM SUB-BASIN
556          KM  BR27C
557          HC      4
             *

558          KK  OVL27C
559          KM  DIVERT FLOWS INTO BASELINE STORMDRAIN AT 27TH AVE.
560          DT  BLSD27
561          DI      0     156   10000
562          DQ      0     156     156
             *

563          KK  RR35C3
564          KM  ROUTE FLOW FROM COMPUTATION POINT CPS27C TO COMPUTATION POINT CPR35C
565          RS      8    ELEV     -1
566          RC  0.070   0.070   0.070    3400  0.0072    1042
567          RX      0     200     420     520     630     750    1120    1360
568          RY   1042  1041.5    1041  1040.8  1040.9    1041  1041.5    1042
             *
```


1


```
LINE         ID.....1.....2.....3.....4.....5.....6.....7.....8.....9.....10

569          KK  RR35C2
570          KM  ROUTE FLOW FROM COMPUTATION POINT CPR27C TO COMPUTATION POINT CPR35C
571          RS     20    ELEV     -1
572          RC  0.070   0.070   0.070    8800  0.0065  1058.5
573          RX      0     230     480     580     680     770     910    1600
574          RY 1058.5    1057    1057    1057    1057    1057    1057  1059.3
             *

575          KK  RR35C
576          KM  SUB-BASIN RR35C-LAND USE - AGRICULTURE;MINOR DEVELOPMENT
577          KM  24-HOUR TYPE II RAINFALL WAS USED TO FIND TC & R FOR THIS BASIN
578          KM  THIS BASIN USED RAINFALL REDUCTION FACTOR OF .90
579          BA  1.890
580          LG   .500    .000   5.500    .348    .000
581          UC   .983    .310
582          UA      0       3       9      18      28      42      59      73      87      92
583          UA    100
             *

584          KK  CPR35B
585          KM  COMBINE ROUTED FLOW FROM COMPUTATION POINT CPB27C TO RUNOFF FROM SUB-BASIN
586          KM  RR35C
587          HC      3
             *

588          KK  RRS37C
589          KM  ROUTE FLOW FROM COMPUTATION POINT CPR35C TO COMPUTATION POINT CPS37C
590          RS      8    ELEV     -1
591          RC   0.10    0.10    0.10    2400  0.0025
592          RX      0     280     470     630     700     840    1390    1860
593          RY   1028    1026    1026    1025    1025    1025    1026    1028
             *

594          KK  SA37C
595          KM  SUB-BASIN SA37C-LAND USE- URBAN, AGRICULTURE
596          KM  24-HOUR TYPE II RAINFALL WAS USED TO FIND TC & R FOR THIS BASIN
597          KM  THIS BASIN USED RAINFALL REDUCTION FACTOR OF .90
598          BA   .590
599          LG   .320    .130   4.900    .323  15.000
600          UC   .750    .337
601          UA      0       5      16      30      65      77      84      90      94      97
602          UA    100
             *

603          KK  CPS37C
604          KM  COMBINE ROUTED FLOW FROM COMPUTATION POINT CPS37C WITH RUNOFF FROM SUB-
605          KM  BASIN SA37C
606          HC      2
             *
```


1


```
LINE         ID.....1.....2.....3.....4.....5.....6.....7.....8.....9.....10

607          KK  RAV431
608          KM  ROUTE FLOW FROM COMPUTATION POINT CPS37C TO COMPUTATION POINT CAV43C
609          RS     15    ELEV     -1
610          RC   0.10    0.10    0.10    3200  0.0012
611          RX      0     380     620     980    1320    1560    1700    2200
612          RY 1022.8    1021  1020.6  1020.9  1021.4  1021.6  1021.8  1022.8
             *

613          KK   WC2A
             *

614          KM  SUB-BASIN WC2A -LAND USE- NATURAL DESERT HILLSLOPES; MINOR DEVELOPMENT
615          KM  24-HOUR TYPE II RAINFALL WAS USED TO FIND TC & R FOR THIS BASIN
616          KM  THIS BASIN USED RAINFALL REDUCTION FACTOR OF .90
617          BA   .080
618          LG   .150    .251   8.600    .070    .000
619          UC   .383    .530
620          UA      0       3       5       8      12      20      43      75      90      96
621          UA    100
             *

622          KK  RD27.1
623          KM  ROUTE FLOW FROM SUB-BASIN WC2A  TO COMPUTATION POINT CD27.1
624          RS      1    ELEV     -1
625          RC  0.035   0.035   0.035     960  0.016    1150
626          RX      0      30      40      55      70      85     105     130
627          RY   1150    1150    1148    1147    1148    1149    1150    1151
             *

628          KK  WC2.1A
629          KM  SUB-BASIN WC2.1A-LAND USE- NATURAL DESERT HILLSLOPES; MINOR DEVELOPMENT
630          KM  24-HOUR TYPE II RAINFALL WAS USED TO FIND TC & R FOR THIS BASIN
631          KM  THIS BASIN USED RAINFALL REDUCTION FACTOR OF .90
632          BA   .080
633          LG   .150    .290   4.000    .520    .000
634          UC   .350    .310
635          UA      0       3       5       8      12      20      43      75      90      96
636          UA    100
             *

637          KK  RD27.2
638          KM  ROUTE FLOW FROM SUB-BASIN WC2.1A TO COMPUTATION POINT CD27.1
639          RS      1    ELEV     -1
640          RC  0.035   0.035   0.035    1000  0.015    1153
641          RX      0      35      75     100     135     145     165     195
642          RY   1153    1152    1150    1149    1148    1150    1152    1154
             *

643          KK  CD27.1
644          KM  COMBINE ROUTED FLOW FROM SUB-BASINS WC2A AND WC2.1A
645          HC      2
             *
```


1


```
LINE         ID.....1.....2.....3.....4.....5.....6.....7.....8.....9.....10

646          KK  RD27.3
647          KM  ROUTE FLOW FROM COMPUTATION POINT CP27.1 TO COMPUTATION POINT CP27.2
648          RS      1    ELEV     -1
649          RC  0.035   0.035   0.035     450  0.011    1144
650          RX      0      50     115     125     140     150     160     180
651          RY   1144    1143    1142    1141    1142    1144    1146    1148
             *

652          KK   WC3A
653          KM  SUB-BASIN WC3A--LAND USE- NATURAL DESERT HILLSLOPES; MINOR DEVELOPMENT
654          KM  24-HOUR TYPE II RAINFALL WAS USED TO FIND TC & R FOR THIS BASIN
655          KM  THIS BASIN USED RAINFALL REDUCTION FACTOR OF .90
656          BA   .014
657          LG   .150    .250   8.600    .066    .000
658          UC   .300    .467
659          UA      0       3       5       8      12      20      43      75      90      96
660          UA    100
             *

661          KK  RD27.4
662          KM  ROUTE FLOW FROM SUB-BASIN WC3A TO COMPUTATION POINT CD27.2
663          RS      1    ELEV     -1
664          RC  0.035   0.040   0.035     640  0.022
665          RX      0      40      80     100     110     120     150     200
666          RY   1145    1144    1143    1142  1141.8    1142    1144    1145
             *

667          KK  CD27.2
668          KM  COMBINE ROUTED FLOWS FROM SUB-BASIN WC3A AND COMPUTATION POINT CD27.1
669          HC      2
             *

670          KK  RD27.5
671          KM  ROUTE FLOW FROM COMPUTATION POINT CD27.2 TO COMPUTATION POINT CD27.3
672          RS      1    ELEV     -1
673          RC  0.035   0.035   0.035    1400  0.014
674          RX      0      40     100     160     175     190     240     260
```

```
675          RY   1126   1124   1123   1122   1121   1122   1124   1126
676          KK   WC4A
677          KM   SUB-BASIN WC4A -LAND USE- DESERT MOUNTAIN, DESERT HILLS;  MINOR DEVELOPMENT
678          KM   24-HOUR TYPE II RAINFALL WAS USED TO FIND TC & R FOR THIS BASIN
679          KM   THIS BASIN USED RAINFALL REDUCTION FACTOR OF .90
680          BA    .360
681          LG    .150    .297   3.950    .546  25.000
682          UC    .383    .273
683          UA       0       3       5       8      12      20      43      75      90      96
684          UA     100
```


1

HEC-1 INPUT

```
LINE         ID.....1.....2.....3.....4.....5.....6.....7.....8.....9.....10
685          KK  RD27.6
686          KM   ROUTE FLOW FROM SUB-BASIN WC4A TO COMPUTATION POINT CD27.3
687          RS       3    ELEV      -1
688          RC   0.035   0.035   0.035    2200   0.016
689          RX       0      60     100     180     225     300     435     500
690          RY    1142    1141  1140.5    1140    1140  1140.5    1141    1142
691          KK  CD27.3
692          KM   COMBINE ROUTED FLOWS FROM COMPUTATION POINT CD27.2 AND SUB-BASIN WC4A
693          HC       2
694          KK  RD27.7
695          KM   ROUTE FLOW FROM COMPUTATION POINT CD27.3 TO COMPUTATION POINT CD27.4
696          RS       2    ELEV      -1
697          RC   0.040   0.050   0.035     950   0.006
698          RX       0      20     135     170     220     280     400     460
699          RY  1116.5    1116  1115.5    1115  1115.5  1115.8    1116  1116.5
700          KK   DR27C
701          KM   SUB-BASIN DR27C-LAND USE- AGRICULTURE, DESERT HILLS; MINOR DEVELOMENT
702          KM   24-HOUR TYPE II RAINFALL WAS USED TO FIND TC & R FOR THIS BASIN
703          KM   THIS BASIN USED RAINFALL REDUCTION FACTOR OF .90
704          BA    .230
705          LG    .210    .345   3.996    .609    .000
706          UC    .467    .352
707          UA       0       3       5       8      12      20      43      75      90      96
708          UA     100
709          KK  CD27.4
710          KM   COMBINE RUNOFF FROM SUB-BASIN DR27C WITH ROUTED FLOW FROM COMPUTATION POINT
711          KM   CD27.3
712          HC       2
713          KK  RB35C2
714          KM   ROUTE FLOW FROM COMPUTATION POINT CD27.3 TO COMPUTATION POINT CPB352
715          RS      20    ELEV      -1
716          RC   0.070   0.070   0.070    7680   0.007    1070
717          RX       0     280     660     850    1000    1130    1180    1320
718          RY    1070  1069.8  1069.7    1069    1069    1069  1069.7    1070
719          KK  BR35C2
720          KM   SUB-BASIN BR35C2-LAND USE - AGRICULTURE;MINOR DEVELOPMENT
721          KM   24-HOUR TYPE II RAINFALL WAS USED TO FIND TC & R FOR THIS BASIN
722          KM   THIS BASIN USED RAINFALL REDUCTION FACTOR OF .90
723          BA    .730
724          LG    .500    .000   3.550    .439    .000
725          UC    .867    .689
726          UA       0       3       9      18      28      42      59      73      87      92
```


1

HEC-1 INPUT

```
LINE         ID.....1.....2.....3.....4.....5.....6.....7.....8.....9.....10
727          UA     100
728          KK  CPB352
729          KM   COMBINE ROUTED FLOW FROM COMPUTATION POINT CD27.4 TO RUNOFF FROM SUB-BASIN
730          KM   BR35C2
731          HC       2
732          KK  BR35C1
733          KM    SUB-BASIN BR35C1-LAND USE- AGRICULTURE; MINOR DEVELOPMENT
734          KM   24-HOUR TYPE II RAINFALL WAS USED TO FIND TC & R FOR THIS BASIN
735          KM   THIS BASIN USED RAINFALL REDUCTION FACTOR OF .90
736          BA    .550
737          LG    .500    .000   5.100    .368    .000
738          UC    .933    .670
739          UA       0       3       9      18      28      42      59      73      87      92
740          UA     100
741          KK  CPB352
742          KM   COMBINE RUNOFF FROM SUB-BASIN BR35C1 TO FLOW AT COMPUTATION POINT CPB352
743          HC       2
744          KK  BLSD27
745          KM   RETRIEVE BASELINE STORMDRAIN FLOWS FROM 27TH AVE.
746          DR  BLSD27
747          KK   RSD27
748          KM   ROUTE FLOWS IN BASELINE STORMDRAIN FROM 27TH AVE TO 35TH AVE.
749          RD    5500   .0042    .013             CIRC       6
750          KK   35-2
751          KM   COMBINE FLOWS AT 35TH AVE FROM STORMDRAIN AND OVERLAND FLOWS
752          HC       2
753          KK  OV35-2
754          KM   DIVERT FLOWS TO STORMDRAIN AT 35TH AVE.
755          DT  BLSD35
756          DI       0     284   10000
757          DQ       0     284     284
758          KK  RAV432
759          KM   ROUTE FLOW FROM COMPUTATION POINT CPB352 TO COMPUTATION POINT CAV43C( 1ST.
760          KM   REACH )
761          RS       9    ELEV      -1
762          RC    0.07    0.07    0.07    3400   0.0056
763          RX       0      90      91     360     640    1015    1016    1475
764          RY    1044    1042    1042  1041.2  1041.2    1042    1042    1044
```


1

HEC-1 INPUT

```
LINE         ID.....1.....2.....3.....4.....5.....6.....7.....8.....9.....10
765          KK  RAV433
766          KM   ROUTE FLOW FROM COMPUTATION POINT CPB352 TO COMPUTATION POINT CAV43C (2ND.
767          KM   REACH )
768          RS       8    ELEV      -1
769          RC    0.07    0.07    0.07    3000   0.0060
770          RX       0     300     301     570     630    1220    1400    1650
771          RY    1030    1029    1029    1028    1028    1029    1029    1030
772          KK   WC5A
773          KM   SUB-BASIN WC5A -LAND USE- DESERT HILLS; MINOR DEVELOMENT
774          KM   24-HOUR TYPE II RAINFALL WAS USED TO FIND TC & R FOR THIS BASIN
775          KM   THIS BASIN USED RAINFALL REDUCTION FACTOR OF .90
             * KO     1       2
776          BA    .420
777          LG    .150    .346   2.880   1.050  28.000
778          UC    .500    .359
779          UA       0       3       5       8      12      20      43      75      90      96
780          UA     100
781          KK  RD35.1
782          KM   ROUTE RUNOFF FROM SUB-BASIN WC5A TO COMPUTATION POINT CD35.1
783          RS      10    ELEV      -1
784          RC   0.040   0.055   0.035    4800   0.012
785          RX       0     130     270     330     400     460     530     625
786          RY    1126  1125.9  1125.7  1125.5    1125  1125.5  1125.7    1126
787          KK   WC6A
788          KM   SUB-BASIN WC6A -LAND USE- NATURAL DESERT HILLSLOPES; MINOR DEVELOPMENT
789          KM   24-HOUR TYPE II RAINFALL WAS USED TO FIND TC & R FOR THIS BASIN
790          KM   THIS BASIN USED RAINFALL REDUCTION FACTOR OF .90
791          BA    .014
792          LG    .150    .270   3.750    .293    .000
793          UC    .233    .259
794          UA       0       3       5       8      12      20      43      75      90      96
795          UA     100
796          KK  RD35.2
797          KM   ROUTE RUNOFF FROM SUB-BASIN WC6A TO COMPUTATION POINT CD35.1
798          RS      13    ELEV      -1
799          RC   0.070   0.070   0.070    3800   0.015
800          RX       0     130     240     280     340     440     530     655
801          RY    1122    1120    1118  1117.8    1118    1119    1120    1122
802          KK  CD35.1
803          KM   COMBINE ROUTED FLOW FROM SUB-BASINS WC5A AND WC6A
804          HC       2
```


1

HEC-1 INPUT

```
LINE         ID.....1.....2.....3.....4.....5.....6.....7.....8.....9.....10
```

```
805         KK  RD35.3
806         KM   ROUTE FLOW FROM COMPUTATION POINT CD35.1 TO COMPUTATION POINT CD35.2
807         RS      6    ELEV      -1
808         RC  0.035   0.035   0.035    2480   0.005  1090.5
809         RX      0     100     200     350     435     480     500     525
810         RY   1092    1091    1090  1089.8  1089.7  1089.6    1090  1090.5
            *

811         KK   WC7A
812         KM   SUB-BASIN WC7A -LAND USE- NATURAL DESERT HILLSLOPES; MINOR DEVELOPMENT
813         KM   24-HOUR TYPE II RAINFALL WAS USED TO FIND TC & R FOR THIS BASIN
814         KM   THIS BASIN USED RAINFALL REDUCTION FACTOR OF .90
815         BA   .050
816         LG   .150    .270   7.000    .141    .000
817         UC   .317    .332
818         UA      0       3       5       8      12      20      43      75      90      96
819         UA    100
            *

820         KK  RD35.4
821         KM   ROUTE RUNOFF FROM SUB-BASIN WC7A TO COMPUTATION POINT CD35.3
822         RS      4    ELEV      -1
823         RC  0.035   0.035   0.035    2800   0.018  1128.5
824         RX      0     100     170     240     250     260     330     360
825         RY   1129    1128    1127    1126  1125.8    1126    1128  1128.5
            *

826         KK   WC8A
827         KM   SUB-BASIN WC8A -LAND USE- DESERT MOUNTAIN, DESERT HILLS; MINOR DEVELOMENT
828         KM   24-HOUR TYPE II RAINFALL WAS USED TO FIND TC & R FOR THIS BASIN
829         KM   THIS BASIN USED RAINFALL REDUCTION FACTOR OF .90
830         BA   .350
831         LG   .150    .321   3.700    .651  30.000
832         UC   .433    .366
833         UA      0       3       5       8      12      20      43      75      90      96
834         UA    100
            *

835         KK  RD35.5
836         KM   ROUTE FLOW FROM SUB-BASIN WC8A TO COMPUTATION POINT CD35.3
837         RS      2    ELEV      -1
838         RC  0.030   0.030   0.030    2200   0.022    1139
839         RX      0      50     125     190     240     370     400     450
840         RY   1139    1138  1137.5    1137  1137.5    1138    1140    1141
            *

841         KK  CD35.3
842         KM   COMBINE ROUTED FLOW FROM SUB-BASINS WC7A AND WC8A
843         HC      2
            *
```



```
LINE        ID.....1.....2.....3.....4.....5.....6.....7.....8.....9.....10

844         KK  RD35.6
845         KM   ROUTE FLOW FROM COMPUTATION POINT CD35.3 TO COMPUTATION POINT CD35.4
846         RS      1    ELEV      -1
847         RC  0.030   0.035   0.035     700   0.011
848         RX      0      30      60     110     140     180     240     350
849         RY   1103  1101.8  1101.6  1101.4    1101  1101.4  1101.7    1103
            *

850         KK   WC9A
851         KM   SUB-BASIN WC9A -LAND USE- NATURAL DESERT HILLSLOPES; MINOR DEVELOPMENT
852         KM   24-HOUR TYPE II RAINFALL WAS USED TO FIND TC & R FOR THIS BASIN
853         KM   THIS BASIN USED RAINFALL REDUCTION FACTOR OF .90
854         BA   .025
855         LG   .150    .250   8.600    .066    .000
856         UC   .300    .420
857         UA      0       3       5       8      12      20      43      75      90      96
858         UA    100
            *

859         KK  RD35.7
860         KM   ROUTE RUNOFF FROM SUB-BASIN WC9A TO COMPUTATION POINT CD35.5
861         RS      1    ELEV      -1
862         RC  0.035   0.035   0.035    1000   0.025    1130
863         RX      0      30      40      60      70      90     120     140
864         RY   1130    1130    1129    1128  1128.5    1129    1130  1130.5
            *

865         KK   WC10A
866         KM   SUB-BASIN WC10A -LAND USE- NATURAL DESERT HILLSLOPES; MINOR DEVELOPMENT
867         KM   24-HOUR TYPE II RAINFALL WAS USED TO FIND TC & R FOR THIS BASIN
868         KM   THIS BASIN USED RAINFALL REDUCTION FACTOR OF .90
869         BA   .020
870         LG   .150    .260   5.800    .059    .000
871         UC   .233    .289
872         UA      0       3       5       8      12      20      43      75      90      96
873         UA    100
            *

874         KK  RD35.8
```

```
875         KM   ROUTE RUNOFF FROM SUB-BASIN WC10A TO COMPUTATION POINT CD35.5
876         RS      1    ELEV      -1
877         RC  0.035   0.035   0.035    1000   0.025
878         RX      0      30      50      70     100     140     210     260
879         RY   1134    1134    1133    1132    1132    1133  1133.5    1134
            *

880         KK  CD35.5
881         KM   COMBINE ROUTED FLOW FROM SUB-BASINS WC9A AND WC10A
882         HC      2
            *
```



```
LINE        ID.....1.....2.....3.....4.....5.....6.....7.....8.....9.....10

883         KK  RD35.9
884         KM   ROUTE FLOW FROM COMPUTATION POINT CD35.5 TO COMPUTATION POINT CD35.6
885         RS      2    ELEV      -1
886         RC  0.030   0.030   0.030    1200   0.015
887         RX      0      60     110     170     210     240     330     370
888         RY   1116  1115.8  1115.5    1115  1114.8    1115  1115.8    1116
            *

889         KK   WC11A
890         KM   SUB-BASIN WC11A -LAND USE- DESERT MOUNTAINS, DESERT HILLS; MINOR DEVELOPMENT
891         KM   24-HOUR TYPE II RAINFALL WAS USED TO FIND TC & R FOR THIS BASIN
892         KM   THIS BASIN USED RAINFALL REDUCTION FACTOR OF .90
893         BA   .290
894         LG   .150    .335   3.600    .703  53.000
895         UC   .367    .357
896         UA      0       3       5       8      12      20      43      75      90      96
897         UA    100
            *

898         KK  RD3510
899         KM   ROUTE RUNOFF FROM SUB-BASIN WC11A TO COMPUTATION POINT CD35.7
900         RS      1    ELEV      -1
901         RC  0.050   0.050   0.050    1100   0.024
902         RX      0      50     170     180     225     260     380     460
903         RY   1132  1131.8  1131.6  1131.5    1131  1131.5  1131.8    1132
            *

904         KK   WC12A
905         KM   SUB-BASIN WC12A -LAND USE- DESERT MOUNTAIN, DESERT HILLS; MINOR DEVELOPMENT
906         KM   24-HOUR TYPE II RAINFALL WAS USED TO FIND TC & R FOR THIS BASIN
907         KM   THIS BASIN USED RAINFALL REDUCTION FACTOR OF .90
908         BA   .260
909         LG   .150    .320   3.800    .632  28.000
910         UC   .333    .217
911         UA      0       3       5       8      12      20      43      75      90      96
912         UA    100
            *

913         KK  RD3511
914         KM   ROUTE RUNOFF FROM SUB-BASIN WC12A TO COMPUTATION POINT CD35.7
915         RS      1    ELEV      -1
916         RC  0.040   0.040   0.040    1200   0.022    1144
917         RX      0      10      25      45      70     120     235     290
918         RY 1144.5    1144  1143.5    1143  1143.5  1143.7  1143.8    1144
            *

919         KK  CD35.7
920         KM   COMBINE ROUTED FLOWS FROM SUB-BASINS WC11A AND WC12A
921         HC      2
            *
```



```
LINE        ID.....1.....2.....3.....4.....5.....6.....7.....8.....9.....10

922         KK  RD3512
923         KM   ROUTE FLOW FROM COMPUTATION POINT CD35.7 TO COMPUTATION POINT CD35.6
924         RS      2    ELEV      -1
925         RC  0.055   0.055   0.055    1080   0.006
926         RX      0      20      50      70     130     180     400     460
927         RY 1122.5    1122    1121  1120.5    1121  1121.5    1122  1122.5
            *

928         KK  CD35.6
929         KM   COMBINE ROUTED FLOW FROM COMPUTATION POINTS CD35.5 AND CD35.7
930         HC      2
            *

931         KK  RD3513
932         KM   ROUTE FLOW FROM COMPUTATION POINT CD35.6 TO COMPUTATION POINT CD35.4
933         RS      1    ELEV      -1
934         RC  0.040   0.035   0.030    1000   0.012
935         RX      0      40     130     210     280     340     570     615
936         RY 1102.5    1102  1101.8  1101.5    1101  1101.5    1102  1102.5
            *

937         KK  CD35.4
938         KM   COMBINE ROUTED FLOW FROM COMPUTATION POINTS CD35.3 AND CD35.6
939         HC      2
```

```
                +
          940   KK  RD3514
          941   KM  ROUTE FLOW FROM COMPUTATION POINT CD35.4 TO COMPUTATION POINT CD35.2
          942   RS      3    ELEV      -1
          943   RC  0.070   0.070   0.070    1400   0.006    1194
          944   RX      0     120     200     300     400     470     560     660
          945   RY   1194  1193.0  1192.8  1192.5  1192.5  1192.8    1193    1194
                +
          946   KK  WC15A
          947   KM  SUB-BASIN WC15A -LAND USE- DESERT MOUNTAIN, DESERT HILLS; MINOR DEVELOMENT
          948   KM  24-HOUR TYPE II RAINFALL WAS USED TO FIND TC & R FOR THIS BASIN
          949   KM  THIS BASIN USED RAINFALL REDUCTION FACTOR OF .90
                * KO     1       2
          950   BA   .360
          951   LG   .150    .320   3.350    .784  50.000
          952   UC   .317    .245
          953   UA     0       3       5       8      12      20      43      75      90      96
          954   UA   100
                +
          955   KK  RD3515
          956   KM  ROUTE RUNOFF FROM SUB-BASIN WC15A TO COMPUTATION POINT CD35.8
          957   RS      1    ELEV      -1
          958   RC  0.030   0.035   0.030    1250   0.014    1136
          959   RX      0      30      50      70      85     100     140     200
          960   RY   1140    1138    1136    1134    1132    1134    1135    1136
                +
```



```
LINE      ID.....1.....2.....3.....4.....5.....6.....7.....8.....9.....10
          961   KK   PM2A
          962   KM  SUB-BASIN PM2A -LAND USE- DESERT MOUNTAIN, DESERT HILLS; MINOR DEVELOMENT
          963   KM  24-HOUR TYPE II RAINFALL WAS USED TO FIND TC & R FOR THIS BASIN
          964   KM  THIS BASIN USED RAINFALL REDUCTION FACTOR OF .90
          965   BA   .070
          966   LG   .150    .332   4.100    .502  15.000
          967   UC   .300    .282
          968   UA     0       3       5       8      12      20      43      75      90      96
          969   UA   100
                +
          970   KK  CD35.8
          971   KM  COMBINE ROUTED FLOW FROM SUB-BASIN WC15A TO SUB-BASIN PM2A
          972   HC     2
                +
          973   KK  RD3516
          974   KM  ROUTE FLOW FROM COMPUTATION POINT CD35.8 TO COMPUTATION POINT CD35.9
          975   RS      1    ELEV      -1
          976   RC  0.035   0.040   0.030    1400   0.008    1126
          977   RX      0      25      35      50     130     150     200     260
          978   RY   1130    1126    1124    1122    1122    1124    1125    1126
                +
          979   KK  WC13A
          980   KM  SUB-BASIN WC13A -LAND USE- NATURAL DESERT HILLSLOPES; MINOR DEVELOPMENT
          981   KM  24-HOUR TYPE II RAINFALL WAS USED TO FIND TC & R FOR THIS BASIN
          982   KM  THIS BASIN USED RAINFALL REDUCTION FACTOR OF .90
          983   BA   .013
          984   LG   .150    .250   8.600    .066    .000
          985   UC   .250    .341
          986   UA     0       3       5       8      12      20      43      75      90      96
          987   UA   100
                +
          988   KK  RD3517
          989   KM  ROUTE RUNOFF FROM SUB-BASIN WC13A TO COMPUTATION POINT CD35.9
          990   RS      3    ELEV      -1
          991   RC  0.035   0.035   0.035    1280   0.023
          992   RX      0     115     180     225     270     350     435     530
          993   RY   1132  1131.5  1131.2    1131  1131.2  1131.5  1131.8    1132
                +
          994   KK  WC14A
          995   KM  SUB-BASIN WC14A -LAND USE- NATURAL DESERT HILLSLOPES; MINOR DEVELOPMENT
          996   KM  24-HOUR TYPE II RAINFALL WAS USED TO FIND TC & R FOR THIS BASIN
          997   KM  THIS BASIN USED RAINFALL REDUCTION FACTOR OF .90
          998   BA   .050
          999   LG   .150    .290   4.000    .520    .000
         1000   UC   .367    .427
         1001   UA     0       3       5       8      12      20      43      75      90      96
         1002   UA   100
                +
```



```
LINE      ID.....1.....2.....3.....4.....5.....6.....7.....8.....9.....10
         1003   KK  RD3518
         1004   KM  ROUTE RUNOFF FROM SUB-BASIN WC14A TO COMPUTATION POINT CD35.9
         1005   RS      6    ELEV      -1
         1006   RC  0.040   0.045   0.040    2000   0.013
         1007   RX      0      60     150     220     250     280     310     360
         1008   RY   1134  1133.9  1133.7  1133.4  1133.7  1133.8  1133.9    1134
                +
         1009   KK   PM1A
         1010   KM  SUB-BASIN PM1A -LAND USE- AGRICULTURE, DESERT HILLS; MINOR DEVELOPMENT
         1011   KM  24-HOUR TYPE II RAINFALL WAS USED TO FIND TC & R FOR THIS BASIN
         1012   KM  THIS BASIN USED RAINFALL REDUCTION FACTOR OF .90
         1013   BA   .070
         1014   LG   .380    .097   4.210    .697    2.00
         1015   UC   .383    .279
         1016   UA     0       3       5       8      12      20      43      75      90      96
         1017   UA   100
                +
         1018   KK  CD35.9
         1019   KM  COMBINE ROUTED FLOWS FROM SUB-BASINS WC13A AND WC14A, COMPUTATION POINT
         1020   KM  CD35.8 WITH RUNOFF FROM SUB-BASIN PM1A
         1021   HC     4
                +
         1022   KK  RD3519
         1023   KM  ROUTE FLOW FROM COMPUTATION POINT CD35.9 TO COMPUTATION POINT CD35.2
         1024   RS      1    ELEV      -1
         1025   RC  0.040   0.045   0.040     288   0.012
         1026   RX      0      80     190     270     310     335     440     480
         1027   RY 1102.5    1102  1101.7  1101.5    1101  1101.5    1102  1102.5
                +
         1028   KK   DR35C
         1029   KM  SUB-BASIN DR35C -LAND USE- AGRICULTURE; MINOR DEVELOPMENT
         1030   KM  24-HOUR TYPE II RAINFALL WAS USED TO FIND TC & R FOR THIS BASIN
         1031   KM  THIS BASIN USED RAINFALL REDUCTION FATOR OF .90
         1032   BA   .600
         1033   LG   .360    .221   4.200    .454    .000
         1034   UC   .717    .443
         1035   UA     0       3       5       8      12      20      43      75      90      96
         1036   UA   100
                +
         1037   KK  CD35.2
         1038   KM  COMBINE ROUTED FLOWS FROM COMPUTATION POINTS CD35.1, CD35.4 AND CD35.9 WITH
         1039   KM  RUNOFF FROM SUB-BASIN DR35C
         1040   HC     4
                +
                +
                + TEST BY JUST DIVERTING OUT THE REQUIRED VOLUME FROM THE GOLG COURSE.
                +
                + KK    GC
                + KM  DIVERT STORAGE FROM AGUILA GOLF COURSE
                + DT  STGC     135
                + DI     0      50     100    1000   10000
                + DQ     0      50     100    1000   10000
                + *
                + KK GCOUT
                + KM  DIVERT FLOWS IN EXCESS OF 50 CFS
                + DTGCOVLN
                + DI     0      50     100    1000   10000
                + DQ     0       0      50     950    9950
                +
                +
                +
                + START HEC-1 MODEL MODIFICATION FOR CESAR CHAVEZ DETENTION BASIN
                +
                +
                +
                +
```



```
LINE      ID.....1.....2.....3.....4.....5.....6.....7.....8.....9.....10
         1041   KK  DI35TH
         1042   KM       SPLIT FLOW OPERATION AT THE INTERSECTION OF 35TH AVE AND DOBBINS ROAD
         1043   DT   DIDOB
         1044   DI     0      40     836    1575
         1045   DQ     0      10     335     630
                *
         1046   KK   RDI35
         1047   KM       ROUTE DIVERSION FLOW WEST ACROSS 35TH AVE TO DET. STORAGE AT SRCC1
         1048   RS      1    FLOW      -1
         1049   RC    .03    .025     .03     700    .005
         1050   RX      0      80     190     270     310     335     440     480
         1051   RY   1083  1082.5    1082    1081    1081    1082  1082.5    1083
                *
         1052   KK    CC1
         1053   KM       RUNOFF HYDROGRAPH FROM GC WATERSHED CC1
         1054   BA   .022
         1055   LG   .400     .15   6.350    .259    .000
         1056   UC   .213    .235
         1057   UA     0       3       9      18      28      42      59      73      87
         1058   UA   100
```

```
                *
1059            KK  CPCC1
1060            KM      COMBINE HYDROGRAPHS AT CPCC1
1061            HC    2
                *
1062            KK  SRCC1
1063            KM      STORAGE ROUTE THROUGH FIRST DET. BASIN IN CC1
1064            RS    1   STOR     0
1065            SV    0  1.576  4.110  7.819 13.036 16.318 20.104 24.633 29.653 35.9
1066            SQ    0     0     9     14    16    17    18    242   696   12
1067            SE 1060  1062  1064  1066  1068  1069  1070  1071  1072  10
                *
1068            KK  DICC5
1069            KM      SPLIT FLOW OPERATION AT BASIN CC1 - REMAINDER TO SRCC2
1070            DT  DICC2
1071            DI    0     9    14    17    18   242   696  1264
1072            DQ    0     0     0     0     0    84   254   467
                *
1073            KK  RCC5
1074            KM      ROUTE OVERFLOW FROM SRCC1 TO CPCC5
1075            RS    1   FLOW    -1
1076            RC  .03   .025   .03   550   .005
1077            RX    0    40    90   100   140   150   200   240
1078            RY 1072  1068  1062  1060  1060  1062  1068  1072
                *                                                    PAGE 27
1                                   HEC-1 INPUT
LINE            ID.....1.....2.....3.....4.....5.....6.....7.....8.....9.....10
1079            KK   CC5
1080            KM     RUNOFF HYDROGRAPH FROM GOLF COURSE WATERSHED CC5
1081            BA  .026
1082            LG  .400    .15  6.350   .259   .000
1083            UC  .204   .118
1084            UA    0     3     9     18    28    42    59    73    87
1085            UA  100
                *
1086            KK  CPCC5
1087            KM      COMBINE HYDROGRAPHS AT CPCC5
1088            HC    2
                *
1089            KK  SRCC5
1090            KM      STORAGE ROUTE THROUGH DET. BASIN SRCC5 IN GOLF COURSE
1091            RS    1   STOR     -1
1092            SV    0  1.15   3.18   6.08  10.23  16.23  20.57  26.49  33.71  41.
1093            SQ    0     0     9     13    16    19    21    105   276   4
1094            SE 1056  1058  1060  1062  1064  1066  1067  1068  1069  10
                *
1095            KK   RCC6
1096            KM      ROUTE OVERFLOW FROM SRCC5 TO CPCC6
1097            RS    1   FLOW    -1
1098            RC  .03   .025   .03   450   .005
1099            RX    0    40    90   100   140   150   200   240
1100            RY 1072  1068  1062  1060  1060  1062  1068  1072
                *
1101            KK   CC6
1102            KM     RUNOFF HYDROGRAPH FROM GOLF COURSE WATERSHED CC6
1103            BA  .025
1104            LG  .400    .15  6.350   .259   .000
1105            UC  .117   .059
                *
1106            KK  CPCC6
1107            KM      COMBINE HYDROGRAPHS AT CPCC6
1108            HC    2
                *
1109            KK  SRCC6
1110            KM      STORAGE ROUTE THROUGH DET. BASIN SRCC6 IN GOLF COURSE
1111            RS    1   STOR     -1
1112            SV    0  0.34   1.02   2.15   3.87   6.54  10.95  17.51  21.94  27.
1113            SV 34.94 42.41
1114            SQ    0     0     9     11    13    14    15    16    17    1
1115            SQ  272   485
1116            SE 1044  1046  1048  1050  1052  1054  1056  1058  1059  10
1117            SE 1061  1062
                *                                                    PAGE 28
1                                   HEC-1 INPUT
LINE            ID.....1.....2.....3.....4.....5.....6.....7.....8.....9.....10
1118            KK   RCC7
1119            KM      ROUTE OVERFLOW FROM SRCC6 TO CPCC7
1120            RS    1   FLOW    -1
1121            RC  .03   .025   .03   800   .005
```

```
1122            RX    0    40    90   100   140   150   200   240
1123            RY 1072  1068  1062  1060  1060  1062  1068  1072
                *
1124            KK   CC7
1125            KM     RUNOFF HYDROGRAPH FROM GOLF COURSE WATERSHED CC7
1126            BA  .044
1127            LG  .400    .15  6.350   .259   .000
1128            UC  .196   .110
                *
1129            KK  ICPCC7
1130            KM      COMBINE INTERMEDIATE HYDROGRAPHS AT CPCC7
1131            HC    2
                *
1132            KK  DIDOB
1133            KM      RETURN DIVERSION FLOW NORTH ACROSS DOBBINS ROAD
1134            DR  DIDOB
                *
1135            KK  RDIDOB
1136            KM      ROUTE DIVERSION FLOW NORTH ACROSS DOBBINS TO DET. STORAGE AT SRCC2
1137            RS    1   FLOW    -1
1138            RC  .03   .025   .03   700   .005
1139            RX    0    80   190   270   310   335   440   480
1140            RY 1083 1082.5  1082  1081  1081  1082 1082.5  1083
                *
1141            KK   CC2
1142            KM     RUNOFF HYDROGRAPH FROM GOLF COURSE WATERSHED CC2
1143            BA  .015
1144            LG  .400    .15  6.350   .259   .000
1145            UC  .158   .123
                *
1146            KK  ICPCC2
1147            KM      COMBINE HYDROGRAPHS AT CPCC2
1148            HC    2
                *
1149            KK  DICC2
1150            KM      RETURN DIVERSION FLOW NORTH TO DET BASIN SRCC2
1151            DR  DICC2
                *                                                    PAGE 29
1                                   HEC-1 INPUT
LINE            ID.....1.....2.....3.....4.....5.....6.....7.....8.....9.....10
1152            KK  CPCC2
1153            KM      COMBINE HYDROGRAPHS AT CPCC2
1154            HC    2
                *
1155            KK  SRCC2
1156            KM      STORAGE ROUTE THROUGH DET. BASIN SRCC2 IN GOLF COURSE
1157            RS    1   STOR     -1
1158            SV    0  0.44   1.41   3.11   4.32   5.71   7.69  10.16  11.622
1159            SQ    0     0     9     10    12   153   437   792   995
1160            SE 1062  1064  1066  1068  1069  1070  1071  1072  1072.5
                *
1161            KK   RCC3
1162            KM      ROUTE OVERFLOW FROM SRCC2 TO CPCC3
1163            RS    1   FLOW    -1
1164            RC  .03   .025   .03   750   .005
1165            RX    0    40    90   100   140   150   200   240
1166            RY 1072  1068  1062  1060  1060  1062  1068  1072
                *
1167            KK   CC3
1168            KM     RUNOFF HYDROGRAPH FROM GOLF COURSE WATERSHED CC3
1169            BA  .069
1170            LG  .400    .15  6.350   .259   .000
1171            UC  .233   .110
                *
1172            KK  CPCC3
1173            KM      COMBINE HYDROGRAPHS AT CPCC3
1174            HC    2
                *
1175            KK  SRCC3
1176            KM      STORAGE ROUTE THROUGH DET. BASIN SRCC3 IN GOLF COURSE
1177            RS    1   STOR     0
1178            SV    0  2.61   9.40  23.16  33.72  48.15  67.11  86.06
1179            SQ    0    10    20    23    26   110   281   494
1180            SE 1058  1060  1062  1064  1065  1066  1067  1068
                *
1181            KK   RCC4
1182            KM      ROUTE OVERFLOW FROM SRCC3 TO CPCC4
1183            RS    1   FLOW    0
1184            RC  .03   .025   .03  1100   .005
```

```
1185        RX    0    40    90   100   140   150   200   240
1186        RY 1072  1068  1062  1060  1060  1062  1068  1072
            *
```


HEC-1 INPUT

```
LINE        ID.....1.....2.....3.....4.....5.....6.....7.....8.....9.....10

1187        KK   CC4
1188        KM     RUNOFF HYDROGRAPH FROM GOLF COURSE WATERSHED CC4
1189        BA  .066
1190        LG  .400   .15  6.350  .259  .000
1191        UC  .204  .091
1192        UA    0     3     9    18    28    42    59    73    87
1193        UA  100
            *

1194        KK  CPCC4
1195        KM     COMBINE HYDROGRAPHS AT CPCC4
1196        HC    2
            *

1197        KK  SRCC4
1198        KM     STORAGE ROUTE THROUGH DET. BASIN SRCC3 IN GOLF COURSE
1199        RS     1   STOR     0
1200        SV     0   0.91  3.43  8.89 18.90 26.34 35.88 47.79 60.36
1201        SQ     0      0     9    16    17    18   102   273   486
1202        SE  1052   1054  1056  1058  1060  1061  1062  1063  1064
            *

1203        KK  RCC7
1204        KM     ROUTE OVERFLOW FROM SRCC4 TO CPCC7
1205        RS     1   FLOW     0
1206        RC   .03   .025   .03  1100  .005
1207        RX     0    40    90   100   140   150   200   240
1208        RY  1072  1068  1062  1060  1060  1062  1068  1072
            *

1209        KK  CPCC7
1210        KM     COMBINE ALL HYDROGRAPHS AT CPCC7
1211        HC    2
            *

1212        KK  SRCC7
1213        KM     STORAGE ROUTE THROUGH DET. BASIN SRCC7 IN GOLF COURSE
1214        RS     1   STOR     0
1215        SV     0   0.77  2.10  4.03  6.73 10.47 15.75 17.32 20.45
1216        SV 21.08  22.65
1217        SQ     0      0    12  35.7  35.7  35.7  35.7  35.7  35.7
1218        SQ  35.7    234
1219        SE  1042   1044  1046  1048  1050  1052  1054 1054.5  1055
1220        SE 1055.7 1056.2
            *

1221        KK  DICC7
1222        KM    SPLIT FLOW OPERATION AT BASIN CC7 - REMAINDER TO RPB352
1223        DT  GCOVLD
1224        DI     0    12    30  35.7   234
1225        DQ     0     0     0     0   198
            *
```


HEC-1 INPUT

```
LINE        ID.....1.....2.....3.....4.....5.....6.....7.....8.....9.....10

1226        KK  RPC352
1227        KM    ROUTE DISCHARGE FROM CCP7 TO 39TH & BASELINE
1228        RD  2640   .004   .012          CIRC      3
            *

1229        KK  BLSD35
1230        KM   RETRIEVE STORMDRAIN FLOWS FROM 35TH AVE.
1231        DR  BLSD35
            *

1232        KK  RDS35
1233        KM   ROUTE BASELINE STORMDRAIN FLOWS FROM 35TH AVE TO 39TH AVE
1234        RD  2600  .0062   .013          CIRC      7
            *

1235        KK   CG39
1236        KM   COMBINE HYDROGRAPHS FROM GOLF COURSE STORM DRAIN & RPB352 IN HDR MODEL
1237        KM     AT BASELINE ROAD
1238        HC    2
            *

1239        KK  RBSD43
1240        KM   ROUTE COMBINED STORMDRAIN FROM 29TH AVE TO 43RD & BASELINE
1241        RD  2640  0.028   .012          CIRC     10
            *

1242        KK   CC8
1243        KM     RUNOFF HYDROGRAPH FROM GOLF COURSE WATERSHED CC8
1244        BA  .033
1245        LG  .400   .15  6.350  .259  .000
1246        UC  .188  .115
1247        UA    0     3     9    18    28    42    59    73    87
1248        UA  100
            *

1249        KK  GCOVLD
1250        KM   RETRIEVE THE OVERLAND FLOWS THAT DO NOT MAKE IT INTO THE GOLF COURSE
1251        KM   OUTLET.
1252        DR  GCOVLD
            *

1253        KK   GCOL
1254        KM   COMBINE FLOWS FROM GOLF COURSE
1255        HC    2
            *

1256        KK  RGCOL
1257        KM   ROUTE FLOWS TO CBR43C
1258        RS     1   ELEV    -1
1259        RC  .035   .07   .07  3730  .003 1044.2
1260        RX     0     1    55    56    65    70    90   120
1261        RY 1044.2 1043.2 1043.2 1044.1 1043.5 1043.7 1043.8 1044.2
            *
```


HEC-1 INPUT

```
LINE        ID.....1.....2.....3.....4.....5.....6.....7.....8.....9.....10

1262        KK  SMA43C
1263        KM   SUB-BASIN SMA43C-LAND USE - AGRICULTURE;MINOR DEVELOPMENT
1264        KM   24-HOUR TYPE II RAINFALL WAS USED TO FIND TC & R FOR THIS BASIN
1265        KM   THIS BASIN USED RAINFALL REDUCTION FACTOR OF .90
1266        BA  .130
1267        LG  .500   .000  6.960  .244  .000
1268        UC  .400   .261
1269        UA    0     3     9    18    28    42    59    73    87    92
1270        UA  100
            *

1271        KK  RB43C2
1272        KM   ROUTE RUNOFF FROM SUB-BASIN SMA43C TO COMPUTATION POINT CBR43C
1273        RS     3   ELEV    -1
1274        RC  0.07   0.07  0.07  2600  0.003 1044.2
1275        RX     0     1    55    56    65    70    90   120
1276        RY 1044.2 1043.2 1043.2 1044.1 1043.5 1043.7 1043.8 1044.2
            *

1277        KK  BR43C
1278        KM   SUB-BASIN BR43C-LAND USE - AGRICULTURE;MINOR DEVELOPMENT-LAND USE
1279        KM   24-HOUR TYPE II RAINFALL WAS USED TO FIND TC & R FOR THIS BASIN
1280        KM   THIS BASIN USED RAINFALL REDUCTION FACTOR OF .90
1281        BA   .35
1282        LG  .500   .000  6.350  .259  .000
1283        UC  .883   .538
1284        UA    0     3     9    18    28    42    59    73    87    92
1285        UA  100
            *

1286        KK  CBR43C
1287        KM   COMBINE ROUTED FLOWS FROM COMPUTATION POINT CD35.2 AND SUB-BASIN SMA43C
1288        HC    2
            *

1289        KK   C43
1290        KM   COMBINE FLOWS BEFORE ENTERING BASELINE BASIN
1291        HC    3
            *

1292        KK  43BAS
1293        KM   DETENTION BASIN AT 43RD AVE AND BASELINE ROAD
1294        RS     1   STOR
1295        SQ     0    26    80   115   175   210   240   265
1296        SV     0    12  25.2  39.6  55.3  72.3  90.6 110.4
1297        SE  1022  1024  1026  1028  1030  1032  1034  1036
            *

1298        KK  43OVLD
1299        KM   DIVERTS FLOWS INTO 43RD AVE STORMDRAIN
1300        KM   43RD AVENUE STORM DRAIN UNDER CONSTRUCTION
1301        KM   THE STORM DRAIN BEGINS NORTH OF BASELINE, DIVERTS FLOWS TO SALT RIVER
1302        KM   EVEN THOUGH TOTAL CAPACITY IS 294 CFS, THE BASELINE STORMDRAIN WILL
1303        KM   DISCHARGE TO A CHANNEL JUST EAST OF THE INTERSECTION (WHICH WILL
```


HEC-1 INPUT

```
LINE        ID.....1.....2.....3.....4.....5.....6.....7.....8.....9.....10

1304        KM   EVENTUALLY BECOME A DETENTION BASIN) THEN ENTER INTO THE 43RD AVE
1305        KM   STORMDRAIN.
1306        DT   43SD
1307        DI     0   265  10000
1308        DQ     0   265    265
            *

1309        KK  R43OVL
1310        KM   ROUTE THE OVERLAND FLOWS TO THE LOW SPOT IN 43RD AVE (MARICOPA DRAIN)
```

```
1311        RS     6    FLOW     -1
1312        RC  .035    .07   .035   3750  .0043
1313        RX     0       1     55     56     65     70     90    120
1314        RY  1036  1035.5   1035   1033   1033   1035  1035.5   1036
            *
            *
            *  CONTINUE EXISTING HEC1 MODEL PREPARED FOR THE LAVEEN AREA DRAINAGE MADY
            *
            *

1315        KK  AVR43C
1316        KM   SUB-BASIN AVR43C -LAND USE- URBAN, AGRICULTURE
1317        KM   24-HOUR TYPE II RAINFALL WAS USED TO FIND TC & R FOR THIS BASIN
1318        KM   THIS BASIN USED RAINFALL REDUCTION FACTOR OF .90
1319        BA  1.030
1320        LG   .430    .059  4.000    .396  6.250
1321        UC   .717    .321
1322        UA      0       5     16     30     65     77     84     90     94     97
1323        UA    100
            *

1324        KK   DIVMD
1325        KM   DIVERT FLOWS THAT WILL GO TO THE SOUTHERN AVE BASIN, THE REMAINDER FLOWS WILL
1326        KM   GO TO THE MARICOPA DRAIN NORTH OF THE BASIN.
1327        KM   THE FLOWS TO THE MARICOPA DRAIN ARE APPROXIMATELY 38% OF THE AREA,
1328        KM   THEREFORE, AN ESTIMATE OF 38% OF THE FLOW WILL FLOW TO THE MARICOPA DRAIN.
1329        DT    43C
1330        DI       0     625    1000   10000
1331        DQ       0     625     625     625
            *

1332        KK    MDA
1333        KM   OVERLAND FLOWS THAT CONCENTRATE AT THE LOW SPOT ON 43RD AVE
1334        HC       3
            *

1335        KK   DUMMY
1336        KM   DIVERT THE NORTH FLOWS TO TEMPORARILY GET RID OF THE HYGDROGRAPH
1337        DT    DMDA
1338        DI       0     100    1000   10000
1339        DQ       0     100    1000   10000
            *
```



```
LINE        ID.....1.....2.....3.....4.....5.....6.....7.....8.....9.....10

1340        KK    43C
1341        KM   RETREIVE THE FLOWS FROM SUBBASIN AVR43C
1342        DR    43C
            *

1343        KK    SBAS
1344        KM   COMBINE FLOWS FROM THE EAST AND AVR43C TO ENTER INTO THE SOUTHERN AVE &
1345        KM   43RD AVE DETENTION BASIN.
1346        HC       3
            *

1347        KK  STOR43
1348        KM   PROPOSED BASIN AT THE CORNER OF 43RD AVE AND SOUTHERN
1349        KM   DATA  RELECTS TWO 1018 3-36" OPENINGS
1350        RS       1    STOR
1351        SV       0     .01    12.1    45.6    65.6    38.4   111.1   133.9   146.5
1352        SQ       0       0       0       0       0       0    56.3     340
1353        SE    1002    1003    1006    1012    1014    1016    1018    1020    1021
            *

1354        KK    43W
1355        KM   DIVERT THE ADDITIONAL FLOWS INTO 43RD AVE STORMDRAIN TO THE SALT RIVER
1356        DT   43SDS
1357        DI       0      29     100    1000
1358        DQ       0      29      29      29
            *
            *
            *  ***** BEGINNING OF CHAMPION DRAIN WEST OF 43RD AVE *****
            *
            *

1359        KK    DMDA
1360        KM   RETRIEVE FLOWS AT LOW SPOT ON 43RD AVE (MARICOPA DRAIN)
1361        DR    DMDA
            *

1362        KK    MD43
1363        KM   COMBINE THE FLOWS IN THE MARICOPA DRAIN AT 43RD AVE SOUTH OF BASIN.
1364        HC       2
            *

1365        KK   RMD43
1366        KM   ROUTE FLOWS IN MARICOPA DRAIN FROM 43RD AVE TO 47TH AVE.
1367        RS       3    ELEV     -1
1368        RC    .030    .030    .030   3750   .0011
1369        RX       0      10      20      45     105     130     140     150
1370        RY  1015.2  1015.1    1015    1010    1010    1015  1015.1  1015.2
            *
```



```
LINE        ID.....1.....2.....3.....4.....5.....6.....7.....8.....9.....10

1371        KK  VR47C
1372        KM   SUB-BASIN VR47C-LAND USE - AGRICULTURE;MINOR DEVELOPMENT
1373        KM   24-HOUR TYPE II RAINFALL WAS USED TO FIND TC & R FOR THIS BASIN
1374        KM   THIS BASIN USED RAINFALL REDUCTION FACTOR OF .90
1375        BA    .890
1376        LG    .500    .000  4.950    .385    .000
1377        UC    .933    .407
1378        UA       0       3       9      18      28      42      59      73      87      92
1379        UA     100
            *

1380        KK  CVR47C
1381        KM   COMBINE ROUTED FLOW FROM COMPUTATION POINTS CAV43C AND CBR43C WITH RUNOFF
1382        KM   FROM SUB-BASIN VR47C
1383        HC       2
            *

1384        KK  RBR511
1385        KM   ROUTE FLOW FROM COMPUTATION POINT CVR47C TO COMPUTATION POINT CB51C
1386        KM   MARICOPA DRAIN FROM 47TH AVE TO 51ST AVE.
1387        KO       1
1388        RS       2    ELEV     -1
1389        RC    .030    .030    .030   3200   .0011
1390        RX       0      10      20      45     115     140     150     160
1391        RY  1008.2  1008.1    1008    1003    1003    1008  1008.1  1008.2
            *

1392        KK  AVR51C
1393        KM   SUB-BASIN AVR51C-LAND USE - AGRICULTURE;MINOR DEVELOPMENT
1394        KM   24-HOUR TYPE II RAINFALL WAS USED TO FIND TC & R FOR THIS BASIN
1395        KM   THIS BASIN USED RAINFALL REDUCTION FACTOR OF .90
1396        BA    .280
1397        LG    .500    .000  6.200    .304    .000
1398        UC    .767    .457
1399        UA       0       3       9      18      28      42      59      73      87      92
1400        UA     100
            *

1401        KK  RBR512
1402        KM   ROUTE FLOW FROM SUB-BASIN AVR51C TO COMPUTATION POINT CB51C
1403        RS      24    ELEV     -1
1404        RC    0.07    0.07    0.07   3600  0.001  1010.5
1405        RX       0     120     240     380     570     640     670     740
1406        RY  1010.5  1009.7  1009.5  1009.4  1009.1  1009.1    1009  1010.5
            *

1407        KK   BR51C
1408        KM   SUB-BASIN BR51C-LAND USE - AGRICULTURE;MINOR DEVELOPMENT
1409        KM   24-HOUR TYPE II RAINFALL WAS USED TO FIND TC & R FOR THIS BASIN
1410        KM   THIS BASIN USED RAINFALL REDUCTION FACTOR OF .90
1411        BA    .700
1412        LG    .500    .000  3.650    .459    .000
1413        UC   0.900    .324
1414        UA       0       3       9      18      28      42      59      73      87      92
```



```
LINE        ID.....1.....2.....3.....4.....5.....6.....7.....8.....9.....10

1415        UA     100
            *

1416        KK    CB51
1417        KM   INTERMEDIATE HYDROGRAPH
1418        HC       2
            *

1419        KK  CB51C
1420        KM    COMBINE ROUTED FLOW FROM COMPUTATION POINT CVR47C AND SUB-BASIN AVR51C
1421        KM    WITH RUNOFF FROM SUB-BASIN BR51C
1422        KM    CP AT 51ST AVE AND BASELINE RD.
1423        HC       2
            *

1424        KK  RB1591
1425        KM    ROUTE FLOW FROM 51ST AVE (CB51C) TO 59TH AVE. (CB159C)
1426        KM    MARICOPA DRAIN FROM 51ST AVE TO 59TH AVE.
1427        RS       3    ELEV     -1
1428        RC    .030    .030    .030   5200   .0011
1429        RX       0      10      20      45     125     150     160     170
1430        RY  1000.2  1000.1    1000     995     995    1000  1000.1  1000.2
            *

1431        KK  AVR55C
1432        KM   SUB-BASIN AVR55C-LAND USE - AGRICULTURE;MINOR DEVELOPMENT
1433        KM   24-HOUR TYPE II RAINFALL WAS USED TO FIND TC & R FOR THIS BASIN
1434        KM   THIS BASIN USED RAINFALL REDUCTION FACTOR OF .90
1435        BA    .230
1436        LG    .500    .000  6.330    .295    .000
1437        UC    .917    .623
1438        UA       0       3       9      18      28      42      59      73      87      92
```

```
1439        UA    100
            *

1440        KK  RB1592
1441        KM    ROUTE FLOW FROM SUBASIN AVR55C TO COMPUTATION POINT CB159C
1442        RS     28    ELEV     -1
1443        RC   .070   .070   .070   3720   .0018   1004
1444        RX     0    170    340    540    750     940    1120    1320
1445        RY  1004   1003   1003  1003.5 1003.5  1003.7  1008.8  1004
            *

1446        KK  BR159C
1447        KM   SUB-BASIN BR159C-LAND USE - AGRICULTURE;MINOR DEVELOPMENT
1448        KM   24-HOUR TYPE II RAINFALL WAS USED TO FIND TC & R FOR THIS BASIN
1449        KM   THIS BASIN USED RAINFALL REDUCTION FACTOR OF .90
1450        BA    .680
1451        LG    .500    .000   3.750   .462   .000
1452        UC    .983    .527
1453        UA       0       3       9      18      28      42      59      73      87      92
1454        UA     100
            *
```



```
LINE        ID.....1.....2.....3.....4.....5.....6.....7.....8.....9.....10

1455        KK   VR59C
1456        KM   SUB-BASIN VR59C-LAND USE - AGRICULTURE;MINOR DEVELOPMENT
1457        KM   24-HOUR TYPE II RAINFALL WAS USED TO FIND TC & R FOR THIS BASIN
1458        KM   THIS BASIN USED RAINFALL REDUCTION FACTOR OF .90
1459        BA    .250
1460        LG    .500    .000   6.470   .298   .000
1461        UC    .967    .630
1462        UA       0       3       9      18      28      42      59      73      87      92
1463        UA     100
            *

1464        KK  RB1593
1465        KM   ROUTE FLOW FROM SUB-BASIN VR59C TO COMPUTATION POINT CB159C
1466        RS     22    ELEV     -1
1467        RC   0.07    0.07    0.07   3000  0.0015   1002
1468        RX      0     280     660    840    1020    1120    1220    1250
1469        RY   1002  1001.3  1001.4 1001.4  1001.5  1001.5  1001.6  1002
            *

1470        KK  CB159N
1471        KM     COMBINE ROUTED FLOWS FROM COMPUTATION POINT CB51C AND SUB-BASINS AVR51C
1472        KM     AND VR59C WITH RUNOFF FROM SUB-BASIN BR159C
1473        KM    CP (NORTH FLOWS) AT 59TH AVE AND BASELINE RD.
1474        HC       4
            *

1475        KK  RST43C
1476        KM    RETRIEVE SPLIT FLOW FROM DIVERSION POINT DDR43C
1477        DR  RDR43C
            *

1478        KK   RS51C
1479        KM    ROUTE SPLIT FLOW FROM SUB-BASIN DR43C TO COMPUTATION POINT CS51C
1480        RS     20    ELEV     -1
1481        RC   0.07    0.07    0.07   6000  0.0026
1482        RX      0     240     420    580     760     890    1030    1150
1483        RY   1041  1039.2  1039.3 1039.5  1039.2    1039  1039.4    1041
            *

1484        KK   SM51C
1485        KM   SUB-BASIN SM51C-LAND USE - AGRICULTURE;MINOR DEVELOPMENT
1486        KM   24-HOUR TYPE II RAINFALL WAS USED TO FIND TC & R FOR THIS BASIN
1487        KM   THIS BASIN USED RAINFALL REDUCTION FACTOR OF .90
1488        BA    .500
1489        LG    .500    .000   5.850   .330   .000
1490        UC   1.017    .599
1491        UA       0       3       9      18      28      42      59      73      87      92
1492        UA     100
            *
```



```
LINE        ID.....1.....2.....3.....4.....5.....6.....7.....8.....9.....10

1493        KK   CS51C
1494        KM   COMBINE ROUTED FLOW FROM SUB-BASIN DR43C TO RUNOFF FROM SUB-BASIN SM51C
1495        HC       2
            *

1496        KK  RB2591
1497        KM   ROUTE FLOW FROM COMPUTATION POINT CS51C TO COMPUTATION POINT CB259C
1498        KM   FIRST REACH
1499        RS     13    ELEV     -1
1500        RC   0.07    0.07    0.07   4200  0.0036
1501        RX      0     612    1085   1155    1595    1670    1765    2130
1502        RY 1029.6    1029    1028 1027.5  1027.5    1028    1028  1029.6
            *

1503        KK  RB2592
```

```
1504        KM   ROUTE FLOW FROM COMPUTATION POINT CS51C TO COMPUTATION POINT CB259C
1505        KM   2ND REACH
1506        RS     10    ELEV     -1
1507        RC   0.07    0.07    0.07   3000  0.0063
1508        RX      0      50     140    335    1120    1770    1825    1870
1509        RY   1006    1004    1003   1002    1001    1001    1002  1002.5
            *

1510        KK  BR259C
1511        KM   SUB-BASIN BR259C-LAND USE - AGRICULTURE;MINOR DEVELOPMENT
1512        KM   24-HOUR TYPE II RAINFALL WAS USED TO FIND TC & R FOR THIS BASIN
1513        KM   THIS BASIN USED RAINFALL REDUCTION FACTOR OF .90
1514        BA    1.000
1515        LG    .500    .000   3.550   .475   .000
1516        UC    .967    .506
1517        UA       0       3       9      18      28      42      59      73      87      92
1518        UA     100
            *

1519        KK  CB259A
1520        KM   COMBINE ROUTED FLOW FROM COMPUTATION POINT CS51C AND RUNOFF FROM SUB-
1521        KM   BASIN BR259C
1522        HC       2
            *

1523        KK  DOA55C
1524        KM   RETRIEVE FLOW FROM HIDDEN VALLEY WATERSHED AT SUB-BASIN OA51B
1525        DR  DOA55C
            *

1526        KK   RO55C
1527        KM   ROUTE SPLIT FLOW FROM SUB-BASIN OA51B ( HIDDEN VALLEY WATERSHED ) TO
1528        KM   COMPUTATION POINT CPO55C
1529        RS      9    ELEV     -1
1530        RC  0.065   0.065   0.065   2600  0.0014
1531        RX      0      90     190    260     350     450     580     910
1532        RY 1033.8  1031.8  1031.5 1031.5  1031.5  1031.5  1031.5  1033.8
            *
```



```
LINE        ID.....1.....2.....3.....4.....5.....6.....7.....8.....9.....10

1533        KK   OA55C
1534        KM   SUB-BASIN OA55C -LAND USE- RUAL DEVELEMENT
1535        KM   24-HOUR TYPE II RAINFALL WAS USED TO FIND TC & R FOR THIS BASIN
1536        KM   THIS BASIN USED RAINFALL REDUCTION FACTOR OF .90
1537        BA    .250
1538        LG    .500    .000   3.550   .466   .000
1539        UC    .800    .468
1540        UA       0       3       9      18      28      42      59      73      87      92
1541        UA     100
            *

1542        KK  CPO55C
1543        KM   COMBINE ROUTED DIVERTED FLOW FROM SUB-BASIN OA51B TO RUNOFF FROM SUB-
1544        KM   BASIN OA55C
1545        HC       2
            *

1546        KK   RD57C
1547        KM   ROUTE FLOW FROM COMPUTATION POINT CPO55C TO COMPUTAION CDR57C
1548        RS     12    ELEV     -1
1549        RC   0.07    0.07    0.07   2920  0.001
1550        RX      0     230     370    520     720     870     990    1230
1551        RY   1030  1028.6  1028.4 1028.6  1028.6  1028.8  1028.9    1030
            *

1552        KK   DR57C
1553        KM   SUB-BASIN DR57C-LAND USE - AGRICULTURE;MINOR DEVELOPMENT
1554        KM   24-HOUR TYPE II RAINFALL WAS USED TO FIND TC & R FOR THIS BASIN
1555        KM   THIS BASIN USED RAINFALL REDUCTION FACTOR OF .90
1556        BA    .120
1557        LG    .500    .000   3.500   .470   .000
1558        UC    .950    .704
1559        UA       0       3       9      18      28      42      59      73      87      92
1560        UA     100
            *

1561        KK  CDR57C
1562        KM   COMBINE ROUTED FLOW FROM COMPUTATION POINT CPO55C TO RUNOFF FROM SUB-BASIN
1563        KM   DR57C
1564        HC       2
            *

1565        KK   RD59C
1566        KM   ROUTE FLOW FROM COMPUTATION POINT CDR57C TO COMPUTATION POINT CDR59C
1567        RS      3    ELEV     -1
1568        RC   0.07    0.07    0.07   1200  0.0025
1569        RX      0     130     250    360     480     600     700     740
1570        RY 1027.2    1027    1027   1026  1025.5  1025.5    1026  1027.2
            *
```



```
LINE        ID.....1.....2.....3.....4.....5.....6.....7.....8.....9.....10
```

```
KK  DR59C
KM  SUB-BASIN DR59C-LAND USE - AGRICULTURE;MINOR DEVELOPMENT
KM  24-HOUR TYPE II RAINFALL WAS USED TO FIND TC & R FOR THIS BASIN
KM  THIS BASIN USED RAINFALL REDUCTION FACTOR OF .90
BA   .110
LG   .500    .000   3.500    .470    .000
UC   .817    .626
UA     0       3       9      18      28      42      59      73      87      92
UA   100
*

KK  CDR59C
KM  COMBINE ROUTED FLOW FROM COMPUTATION POINT CDR57C TO RUNOFF FROM SUB-BASIN
KM  DR59C
HC     2
*

KK  RB259
KM  ROUTE FLOW FROM COMPUTATION POINT CDR59C TO COMPUTATION POINT CB259C
RS     6    ELEV      -1
RC  0.07    0.02    0.07    5280  0.0046
RX     0      10      20      35      70      80     120     180
RY  1019  1017.7  1017.2  1017.2  1017.2  1017.7    1018    1019
*

KK  CB259S
KM  COMBINE ROUTED FLOW FROM COMPUTATION POINT CDR59C TO PREVIOUSLY
KM  COMPUTED FLOW AT COMPUTATION POINT CB1592
KM  CP (SOUTH SIDE) 59TH AVE AND BASELINE RD.
HC     2
*

KK   CB59
KM  COMBINE FLOWS AT 59TH AVE & BASELINE RD
KM  COMBINED BOTH NORTH AND SOUTH FLOWS
HC     2
*

KK  RB1631
KM  ROUTE FLOW FROM 59TH AVE (CB259C) TO 63RD AVE. (CB163C)
KM  MODIFY SLOPE TO INDICATE A REALISTIC VELOCITY OF LESS THAN 5 FT/SEC
KM  ADJUST SLOPE FROM .0011 TO .0005
RS     2    ELEV      -1
RC  0.030    .030    .030    2640    .0009
RX     0      10      20      45     135     160     170     180
RY  997.8   997.7   997.6   992.6   992.6   997.6   997.7   997.8
*

KK  BR263C
KM   SUB-BASIN BR263C-LAND USE - AGRICULTURE;MINOR DEVELOPMENT
KM   24-HOUR TYPE II RAINFALL WAS USED TO FIND TC & R FOR THIS BASIN
KM   THIS BASIN USED RAINFALL REDUCTION FACTOR OF .90
BA    .500
LG    .500    .000   3.500    .463    .000
```


1


```
LINE  ID.....1.....2.....3.....4.....5.....6.....7.....8.....9.....10
UC    .933    .639
UA       0       3       9      18      28      42      59      73      87      92
UA     100
*

KK    63S
KM   FLOWS GENERATED FROM THE SOUTHSIDE OF BASELINE RD.
HC       2
*

KK  BR163C
KM   SUB-BASIN BR163C-LAND USE - AGRICULTURE;MINOR DEVELOPMENT
KM   24-HOUR TYPE II RAINFALL WAS USED TO FIND TC & R FOR THIS BASIN
KM   THIS BASIN USED RAINFALL REDUCTION FACTOR OF .90
BA    .260
LG    .500    .000   4.700    .411    .000
UC    .967    .642
UA       0       3       9      18      28      42      59      73      87      92
UA     100
*

KK  CB163C
KM   COMBINE ROUTED FLOW FROM COMPUTATION POINT CB159C WITH RUNOFF FROM SUB-BASINS
KM   BR163C AND BR263C AND ROUTED FLOW FROM COMPUTATION POINT  CB259C
HC       2
*

KK   RCD1C
KM   ROUTE FLOW FROM COMPUTATION POINT CB163C TO COMPUTATION POINT CPCD1C
KM   MARICOPA DRAIN FROM 63RD AVE TO 67TH AVE.
RS       2    ELEV      -1
RC  0.030    .030    .030    2640    .0011
RX       0      10      20      45     135     160     170     180
RY   996.2   996.1     996     991     991     996   996.1   996.2
*

KK  BR67C
KM   SUB-BASIN BR67C-LAND USE - RURAL DEVELEMENT
KM   24-HOUR TYPE II RAINFALL WAS USED TO FIND TC & R FOR THIS BASIN
KM   THIS BASIN USED RAINFALL REDUCTION FACTOR OF .90
BA    .130
LG    .500    .220   6.200    .305    15.0
UC    .667    .454
UA       0       3       9      18      28      42      59      73      87      92
UA     100
*

KK  RCD1C2
KM   ROUTE FLOW FROM SUBASIN BR67C TO COMPUTATION POINT CPCD1C
RS      17    ELEV      -1
RC    0.07    0.07    0.07    2100  0.0014
RX       0      75     260     490     670     830    1000    1130
RY     994   993.5   993.5     993     993     993     993     994
*
```


1


```
LINE  ID.....1.....2.....3.....4.....5.....6.....7.....8.....9.....10

KK   CD1C
KM   SUB-BASIN CD1C -LAND USE - AGRICULTURE;MINOR DEVELOPMENT
KM   24-HOUR TYPE II RAINFALL WAS USED TO FIND TC & R FOR THIS BASIN
KM   THIS BASIN USED RAINFALL REDUCTION FACTOR OF .90
BA    .470
LG    .500    .000   5.320    .351    .000
UC    .933    .369
UA       0       3       9      18      28      42      59      73      87      92
UA     100
*

KK  CPCD1C
KM   COMBINE ROUTED FLOWS FROM COMPUTATION POINT CB163C AND SUB-BASIN BR67C
KM   WITH RUNOFF FROM SUB-BASIN CD1C
HC       3
*

KK  RCD2C1
KM   ROUTE FLOW FROM COMPUTATION POINT CPCD1C TO COMPUTATION POINT CCD2C
KM   MARICOPA DRAIN FROM 67TH AVE TO 75TH AVE.
KM   ADJUST SLOPE FROM .0011 TO REFLECT A VELOCITY OF LESS THAN 5 FT/SEC
RS       3    ELEV      -1
RC  0.030    .030    .030    4600    .0007
RX       0      10      20      45     155     180     190     200
RY  990.2   990.1     990     985     985     990   990.1   990.2
*

KK   CD2C
KM   SUB-BASIN CD2C -LAND USE - AGRICULTURE;MINOR DEVELOPMENT
KM   24-HOUR TYPE II RAINFALL WAS USED TO FIND TC & R FOR THIS BASIN
KM   THIS BASIN USED RAINFALL REDUCTION FACTOR OF .90
BA    .580
LG    .500    .000   6.500    .277    .000
UC    .867    .451
UA       0       3       9      18      28      42      59      73      87      92
UA     100
*

KK  CCD2C1
KM   COMBINE ROUTED FLOW FROM COMPUTATION POINT CPCD1C TO RUNOFF FROM SUB-BASIN
KM   CD2C
HC       2
*

KK  RIR63B
KM   RETRIEVE SPLIT FLOW FROM COMPUTATION POINT CIR63B
DR  RIR63B
*
```


1


```
LINE  ID.....1.....2.....3.....4.....5.....6.....7.....8.....9.....10

KK  RIR65C
KM   ROUTE RETRIEVED FLOW FROM SUB-BASIN IR63B TO COMPUTATION POINT CIR65C
RS       7    ELEV      -1
RC  0.030    0.030   0.030    3300  0.0010
RX       0       1      11      21      26      31      41      46
RY       6       5     4.7     4.7       5     5.5     5.5     6.2
*

KK  IR65C
KM   SUB-BASIN IR65C -LAND USE - AGRICULTURE;MINOR DEVELOPMENT
KM   24-HOUR TYPE II RAINFALL WAS USED TO FIND TC & R FOR THIS BASIN
KM   6-HOUR RAINFALL, PATTERN NO. 3.35 WAS USED TO FIND TC & R FOR THIS BASIN
KM   THIS BASIN USED RAINFALL REDUCTION FACTOR OF .90
BA    .170
LG    .500    .000   3.500    .470    .000
UC    .933    .873
UA       0       3       9      18      28      42      59      73      87      92
UA     100
```

```
                *
1707            KK  CIR65C
1708            KM   COMBINE RETRIEVED ROUTED FLOW FROM SUB-BASIN IR63B TO RUNOFF FROM SUB-BASIN
1709            KM   IR65C
1710            HC      2
                *

1711            KK   RIRDC
1712            KM   ROUTE FLOW FROM COMPUTATION POINT CIR65C TO COMPUTATION POINT CIRDC
1713            RS      4    ELEV     -1
1714            RC   0.03    0.03    0.03    3200  0.0018
1715            RX      0       1      10      20      30      40      50      51
1716            RY 1014.5    1013    1013    1013    1013    1013    1013  1014.5
                *

1717            KK  DIIRDC
1718            KM    ROUTED FLOW FROM COMPUTATION POINT CIR65C IS SPLIT AT COMPUTATION POINT
1719            KM    CIRDC
1720            DT  RIR65C
1721            DI       0      16      34      51      71      80     100     120     150
1722            DQ       0      16      25      32      40      49      69      89     119
                *

1723            KK    IRDC
1724            KM   SUB-BASIN IRDC-LAND USE - AGRICULTURE;MINOR DEVELOPMENT
1725            KM   24-HOUR TYPE II RAINFALL WAS USED TO FIND TC & R FOR THIS BASIN
1726            KM   THIS BASIN USED RAINFALL REDUCTION FACTOR OF .90
1727            BA    .520
1728            LG    .500    .000   3.500    .470    .000
1729            UC   1.333    .968
1730            UA       0       3       9      18      28      42      59      73      87      92
1731            UA     100
                *
1                                        HEC-1 INPUT                                        PAGE 44

LINE            ID.....1.....2.....3.....4.....5.....6.....7.....8.....9.....10

1732            KK    CIRDC
1733            KM    COMBINE ROUTED FLOW FROM COMPUTATION POINT CIR65C TO RUNOFF FROM SUB-BASIN
1734            KM    IRDC
1735            HC      2
                *

1736            KK  RIRSMC
1737            KM    ROUTE FLOW COMPUTATION POINT CIRDC TO COMPUTATION POINT CIRSMC
1738            RS      11     ELEV     -1
1739            RC    0.07    0.07    0.07    3400  0.0058
1740            RX       0     160     240     470     530     780     900    1000
1741            RY  1006.2  1005.7  1005.7  1005.7  1005.6  1005.5  1005.7  1006.2
                *

1742            KK   IRSMC
1743            KM   SUB-BASIN IRSMC-LAND USE - AGRICULTURE;MINOR DEVELOPMENT
1744            KM   24-HOUR TYPE II RAINFALL WAS USED TO FIND TC & R FOR THIS BASIN
1745            KM   THIS BASIN USED RAINFALL REDUCTION FACTOR OF .90
1746            BA    .250
1747            LG    .290    .177   3.890    .488    .000
1748            UC    .650    .469
1749            UA       0       3       9      18      28      42      59      73      87      92
1750            UA     100
                *

1751            KK  CIRSMC
1752            KM
1753            HC      2
                *

1754            KK  RCD2C2
1755            KM    ROUTE FLOW FROM COMPUTATION POINT CIRSMC TO COMPUTATION POINT CCD2C
1756            RS      4     ELEV     -1
1757            RC    0.07    0.07    0.07    1000  0.0040
1758            RX       0     100     300     400     560     620     750     870
1759            RY     989   987.6   987.6   987.6   987.6   987.6   987.6     989
                *

1760            KK  CCD2C2
1761            KM   COMBINE ROUTED FLOW FROM COMPUTATION POINT CIRSMC TO PREVIOUSLY COMPUTED
1762            KM   FLOW AT COMPUTATION POINT CCD2C
1763            KM   MARICOPA DRAIN AT 75TH AVE.
1764            HC      2
                *

1765            KK  RCD3C1
1766            KM   ROUTE FLOW FROM DIVERSION POINT AT BASELINE ROAD (75TH AVE) TO COMPUTATION
1767            KM   POINT CPCD3C (SALT RIVER)
1768            KM   ADJUST SLOPE FROM .0011 TO REFLECT A VELOCITY OF LESS THAN 5 FT/SEC
1769            RS      2     ELEV     -1
1770            RC    0.03    .030    .030    3700   .0007
1771            RX       0      10      20      45     165     190     200     210
1772            RY   986.2   986.1     986     981     981     986   986.1   986.2
                *
1                                        HEC-1 INPUT                                        PAGE 45
```

```
LINE            ID.....1.....2.....3.....4.....5.....6.....7.....8.....9.....10

1773            KK   A67AC
1774            KM   SUB-BASIN 67AC-LAND USE - AGRICULTURE, RURAL
1775            KM   24-HOUR TYPE II RAINFALL WAS USED TO FIND TC & R FOR THIS BASIN
1776            KM   THIS BASIN USED RAINFALL REDUCTION FACTOR OF .90
1777            BA    .610
1778            LG    .500    .000   4.400    .416    .000
1779            UC   1.100    .631
1780            UA       0       3       9      18      28      42      59      73      87      92
1781            UA     100
                *

1782            KK  RCD4C1
1783            KM   ROUTE FLOW FROM SUB-BASIN 67AC CPCD4C TO COMPUTATION POINT CPCD4C
1784            RS      11     ELEV     -1
1785            RC    0.07    0.07    0.07    2600  0.0024
1786            RX       0      80     230     340     590     730     850     920
1787            RY     988     984     984     984     984     984     984   987.8
                *

1788            KK    CD4C
1789            KM   SUB-BASIN CD4C-LAND USE - AGRICULTURE;MINOR DEVELOPMENT
1790            KM   24-HOUR TYPE II RAINFALL WAS USED TO FIND TC & R FOR THIS BASIN
1791            KM   THIS BASIN USED RAINFALL REDUCTION FACTOR OF .90
1792            BA    .190
1793            LG    .500    .000   3.800    .451    .000
1794            UC    .967    .553
1795            UA       0       3       9      18      28      42      59      73      87      92
1796            UA     100
                *

1797            KK  CPCD4C
1798            KM    COMBINE ROUTED FLOW FROM SUB-BASIN 67AC TO RUNOFF FROM SUB-BASIN CD4C
1799            HC      2
                *

1800            KK  RCD3C2
1801            KM   ROUTE FLOW FROM COMPUTATION POINT CPCD4C TO COMPUTATION POINT CPCD3C
1802            RS      22     ELEV     -1
1803            RC    0.07    0.07    0.07    5200  0.0024
1804            RX       0      80     230     340     590     730     850     920
1805            RY     988     984     984     984     984     984     984   987.8
                *

1806            KK    CD3C
1807            KM   SUB-BASIN CD3C-LAND USE - AGRICULTURE;MINOR DEVELOPMENT
1808            KM   24-HOUR TYPE II RAINFALL WAS USED TO FIND TC & R FOR THIS BASIN
1809            KM   THIS BASIN USED RAINFALL REDUCTION FACTOR OF .90
1810            BA    .480
1811            LG    .500    .000   4.800    .350    .000
1812            UC   0.983    .578
1813            UA       0       3       9      18      28      42      59      73      87      92
1814            UA     100
                *
1                                        HEC-1 INPUT                                        PAGE 46

LINE            ID.....1.....2.....3.....4.....5.....6.....7.....8.....9.....10

1815            KK  CPCD3C
1816            KM   COMBINE ROUTED FLOW FROM COMPUTATION POINT CPCD4C, ROUTED FLOW FROM DIVERSION
1817            KM   POINT AT BASELINE ROAD WITH RUNOFF FROM SUB-BASIN CD3C
1818            HC      3
1819            ZZ
```

1

RUNOFF SUMMARY
FLOW IN CUBIC FEET PER SECOND
TIME IN HOURS, AREA IN SQUARE MILES

OPERATION	STATION	PEAK FLOW	TIME OF PEAK	AVERAGE FLOW FOR MAXIMUM PERIOD 6-HOUR	24-HOUR	72-HOUR	BASIN AREA	MAXIMUM STAGE	TIME OF MAX STAGE
HYDROGRAPH AT	IR62B	431.	12.50	87.	22.	13.	0.55		
HYDROGRAPH AT	DR43C	1025.	12.33	152.	44.	25.	0.94		
DIVERSION TO	RDR43C	906.	12.00	128.	38.	22.	0.94		
HYDROGRAPH AT	DDR43C	119.	12.00	24.	6.	3.	0.94		
ROUTED TO	ROA51B	115.	13.33	24.	6.	3.	0.94	1041.42	13.33
ROUTED TO	ROA51B	67.	15.75	21.	6.	3.	0.94	1037.30	15.75
HYDROGRAPH AT	OA51B	1334.	12.50	223.	60.	35.	1.37		
2 COMBINED AT	COA51B	1334.	12.50	237.	66.	38.	2.31		
DIVERSION TO	DOA55C	711.	12.50	126.	35.	20.	2.31		
HYDROGRAPH AT	DFO51B	623.	12.50	111.	31.	18.	2.31		
ROUTED TO	RE55B	443.	13.83	107.	31.	18.	2.31	1029.97	13.83
HYDROGRAPH AT	ER55B	207.	12.67	54.	13.	8.	0.25		
2 COMBINED AT	CER55B	511.	13.75	155.	45.	26.	2.56		
ROUTED TO	RE59B	440.	14.50	154.	44.	26.	2.56	1025.96	14.50
HYDROGRAPH AT	ER59B	206.	12.58	42.	10.	6.	0.28		
2 COMBINED AT	CER59B	452.	14.42	194.	55.	32.	2.84		
ROUTED TO	RIR63B	425.	15.00	190.	55.	32.	2.84	1021.48	15.00
HYDROGRAPH AT	IR63B	94.	12.50	19.	5.	3.	0.13		
3 COMBINED AT	CIR63B	526.	12.50	289.	81.	47.	3.52		
DIVERSION TO	RIR63B	45.	12.50	45.	20.	12.	3.52		
HYDROGRAPH AT	DIR63B	481.	12.50	244.	61.	35.	3.52		
HYDROGRAPH AT	SA19C	316.	12.42	61.	16.	9.	0.48		
DIVERSION TO	SA19C	70.	12.42	28.	8.	5.	0.48		
HYDROGRAPH AT	DSA19C	246.	12.42	32.	8.	5.	0.48		
ROUTED TO	RR23C1	235.	12.58	32.	8.	5.	0.48	1075.97	12.58
ROUTED TO	RR23C2	189.	13.25	32.	8.	5.	0.48	1063.98	13.25
ROUTED TO	RR23C3	156.	13.92	32.	8.	5.	0.48	1053.12	13.92
HYDROGRAPH AT	CR23C	734.	12.17	85.	22.	13.	0.58		
2 COMBINED AT	CPC23C	734.	12.17	116.	30.	17.	1.06		
ROUTED TO	RF27C	489.	13.08	113.	30.	17.	1.06	1048.25	13.08
HYDROGRAPH AT	RR27C	460.	12.33	62.	16.	9.	0.48		
2 COMBINED AT	CPR27C	561.	13.00	173.	45.	26.	1.54		
ROUTED TO	RR35C1	490.	14.17	163.	45.	26.	1.54	1137.88	14.17
HYDROGRAPH AT	CBDE	108.	12.42	22.	6.	3.	0.17		
DIVERSION TO	BLSD7	108.	0.08	22.	6.	3.	0.17		
HYDROGRAPH AT	OVL7	0.	0.08	0.	0.	0.	0.17		
HYDROGRAPH AT	BR19C	364.	12.25	47.	12.	7.	0.39		
DIVERSION TO	BLSD19	50.	12.25	15.	4.	2.	0.39		
HYDROGRAPH AT	OVL19	314.	12.25	33.	8.	5.	0.39		
2 COMBINED AT	COVL19	314.	12.25	33.	8.	5.	0.56		
ROUTED TO	ROVL19	138.	14.67	32.	8.	5.	0.56	1085.46	14.67
HYDROGRAPH AT	SA27C	513.	12.33	82.	21.	12.	0.62		
2 COMBINED AT	CPS27C	513.	12.33	112.	29.	17.	1.18		
ROUTED TO	RR35C3	407.	13.08	109.	29.	17.	1.18	1041.53	13.08
2 COMBINED AT	CPR35A	611.	14.00	266.	74.	43.	2.72		
HYDROGRAPH AT	SM5C	164.	12.08	24.	7.	4.	0.20		
ROUTED TO	RSM7	130.	12.75	24.	7.	4.	0.20	1178.58	12.75
HYDROGRAPH AT	SMA15C	368.	12.17	43.	11.	6.	0.36		
2 COMBINED AT	CPS15C	372.	12.17	67.	18.	10.	0.56		
ROUTED TO	RSM19C	327.	12.50	67.	18.	10.	0.56	1139.93	12.50
HYDROGRAPH AT	SMA19C	59.	12.58	17.	4.	3.	0.16		
2 COMBINED AT	CPS19C	385.	12.50	84.	22.	13.	0.72		
ROUTED TO	RRB27C	270.	14.08	80.	22.	13.	0.72	1108.35	14.08
HYDROGRAPH AT	SM1C	2160.	12.25	341.	113.	65.	1.84		
HYDROGRAPH AT	SM1AC	253.	12.17	31.	9.	5.	0.28		
2 COMBINED AT									

	CSM1	2401.	12.17	373.	121.	70.	2.12		
ROUTED TO	RSM1	2321.	12.33	372.	121.	70.	2.12	1378.07	12.33
HYDROGRAPH AT	SM2C	3451.	12.17	561.	196.	113.	2.19		
2 COMBINED AT	CSM2	5481.	12.17	933.	317.	183.	4.31		
ROUTED TO	RDENT	147.	17.33	146.	139.	103.	4.31	1317.99	17.33
ROUTED TO	RSM2	147.	17.67	146.	139.	101.	4.31	1227.22	17.33
HYDROGRAPH AT	SM3C	455.	12.17	43.	11.	6.	0.48		
2 COMBINED AT	CSM3	535.	12.17	176.	148.	107.	4.79		
ROUTED TO	RSM3	499.	12.33	175.	148.	106.	4.79	1177.13	12.33
HYDROGRAPH AT	SM4C	168.	12.17	26.	7.	4.	0.24		
ROUTED TO	RSM4	164.	12.17	26.	7.	4.	0.24	1169.02	12.17
HYDROGRAPH AT	DRW2C	401.	12.33	71.	22.	13.	0.53		
HYDROGRAPH AT	DRWC1C	70.	12.33	14.	3.	2.	0.12		
4 COMBINED AT	CSM4	1120.	12.25	280.	176.	126.	5.68		
ROUTED TO	RSM5	1051.	12.42	279.	176.	125.	5.68	1159.49	12.42
HYDROGRAPH AT	DR1C	152.	12.25	22.	5.	3.	0.16		
HYDROGRAPH AT	WC1A	274.	12.25	49.	15.	9.	0.25		
ROUTED TO	RSM6	268.	12.25	49.	15.	9.	0.25	1147.73	12.25
HYDROGRAPH AT	DR2C	46.	12.17	5.	1.	1.	0.05		
4 COMBINED AT	CPDR2C	1473.	12.33	352.	196.	138.	6.14		
ROUTED TO	RRB27C	1183.	13.25	345.	195.	130.	6.14	1108.92	13.25
HYDROGRAPH AT	BR27C	594.	12.33	91.	23.	13.	0.78		
HYDROGRAPH AT	BLSD7	108.	12.42	22.	6.	3.	0.00		
ROUTED TO	RBLSD7	109.	12.50	22.	6.	3.	0.00		
HYDROGRAPH AT	BLSD19	50.	11.75	15.	4.	2.	0.00		
2 COMBINED AT	CSD19	159.	12.50	37.	10.	6.	0.00		
ROUTED TO	RSD19	158.	12.58	37.	10.	6.	0.00		
DIVERSION TO	BLSD27	156.	12.58	37.	10.	6.	0.00		
HYDROGRAPH AT	OVL27	2.	12.58	0.	0.	0.	0.00		
4 COMBINED AT	CPB27C	1286.	13.25	494.	237.	156.	7.64		
DIVERSION TO	BLSD27	156.	13.25	156.	149.	105.	7.64		
HYDROGRAPH AT	OVL27C	1130.	13.25	338.	88.	51.	7.64		
ROUTED TO	RR35C3	978.	13.83	332.	88.	51.	7.64	1041.85	13.83
ROUTED TO	RR35C2	801.	15.33	306.	88.	51.	7.64	1057.74	15.33
HYDROGRAPH AT	RR35C	1694.	12.50	277.	69.	40.	1.89		
3 COMBINED AT	CPR35B	1721.	12.58	774.	231.	134.	12.25		
ROUTED TO	RRS37C	1575.	13.17	754.	231.	134.	12.25	1026.94	13.17
HYDROGRAPH AT	SA37C	571.	12.25	89.	25.	14.	0.59		
2 COMBINED AT	CPS37C	1659.	13.17	790.	254.	148.	12.84		
ROUTED TO	RAV431	1391.	14.33	771.	253.	147.	12.84	1022.55	14.33
HYDROGRAPH AT	WC2A	78.	12.25	14.	3.	2.	0.08		
ROUTED TO	RD27.1	76.	12.25	14.	3.	2.	0.08	1148.15	12.25
HYDROGRAPH AT	WC2.1A	70.	12.17	8.	2.	1.	0.08		
ROUTED TO	RD27.2	67.	12.25	8.	2.	1.	0.08	1149.00	12.25
2 COMBINED AT	CD27.1	143.	12.25	21.	5.	3.	0.16		
ROUTED TO	RD27.3	141.	12.25	21.	5.	3.	0.16	1142.56	12.25
HYDROGRAPH AT	WC3A	15.	12.17	2.	1.	0.	0.01		
ROUTED TO	RD27.4	15.	12.25	2.	1.	0.	0.01	1142.19	12.25
2 COMBINED AT	CD27.2	155.	12.25	24.	6.	3.	0.17		
ROUTED TO	RD27.5	146.	12.33	24.	6.	3.	0.17	1122.49	12.33
HYDROGRAPH AT	WC4A	369.	12.17	52.	16.	9.	0.36		
ROUTED TO	RD27.6	351.	12.33	52.	16.	9.	0.36	1140.69	12.33
2 COMBINED AT	CD27.3	498.	12.33	75.	21.	12.	0.53		
ROUTED TO	RD27.7	484.	12.42	75.	21.	12.	0.53	1116.30	12.42
HYDROGRAPH AT	DR27C	157.	12.25	19.	5.	3.	0.23		
2 COMBINED AT	CD27.4	608.	12.42	94.	26.	15.	0.76		
ROUTED TO	RB35C2	398.	13.92	93.	26.	15.	0.76	1069.76	13.92

HYDROGRAPH AT	BR35C2	460.	12.58	99.	25.	14.	0.73			
2 COMBINED AT	CPB352	483.	13.83	190.	51.	29.	1.49			
HYDROGRAPH AT	BR35C1	361.	12.58	79.	20.	11.	0.55			
2 COMBINED AT	CPB352	823.	12.58	269.	71.	41.	2.04			
HYDROGRAPH AT	BLSD27	156.	12.58	37.	10.	6.	0.00			
ROUTED TO	RSD27	156.	12.75	37.	10.	6.	0.00			
2 COMBINED AT	35-2	973.	12.58	305.	80.	47.	2.04			
DIVERSION TO	BLSD35	284.	12.58	168.	46.	27.	2.04			
HYDROGRAPH AT	OV35-2	689.	12.58	137.	34.	20.	2.04			
ROUTED TO	RAV432	569.	13.25	137.	34.	20.	2.04	1042.04	13.25	
ROUTED TO	RAV433	454.	14.00	135.	34.	20.	2.04	1028.94	14.00	
HYDROGRAPH AT	WC5A	290.	12.25	51.	16.	9.	0.42			
ROUTED TO	RD35.1	239.	12.92	50.	16.	9.	0.42	1125.88	12.92	
HYDROGRAPH AT	WC6A	17.	12.08	2.	0.	0.	0.01			
ROUTED TO	RD35.2	7.	13.42	2.	0.	0.	0.01	1118.01	13.42	
2 COMBINED AT	CD35.1	242.	12.92	52.	16.	10.	0.43			
ROUTED TO	RD35.3	229.	13.17	52.	16.	10.	0.43	1090.25	13.17	
HYDROGRAPH AT	WC7A	57.	12.17	7.	2.	1.	0.05			
ROUTED TO	RD35.4	51.	12.42	7.	2.	1.	0.05	1126.41	12.42	
HYDROGRAPH AT	WC8A	307.	12.25	51.	16.	9.	0.35			
ROUTED TO	RD35.5	287.	12.33	51.	16.	9.	0.35	1137.78	12.33	
2 COMBINED AT	CD35.3	338.	12.33	58.	18.	10.	0.40			
ROUTED TO	RD35.6	336.	12.42	58.	18.	10.	0.40	1101.97	12.42	
HYDROGRAPH AT	WC9A	28.	12.17	4.	1.	1.	0.03			
ROUTED TO	RD35.7	27.	12.25	4.	1.	1.	0.03	1128.65	12.25	
HYDROGRAPH AT	WC10A	28.	12.08	4.	1.	1.	0.02			
ROUTED TO	RD35.8	26.	12.17	4.	1.	1.	0.02	1132.27	12.17	
2 COMBINED AT	CD35.5	52.	12.17	8.	2.	1.	0.05			
ROUTED TO	RD35.9	50.	12.33	8.	2.	1.	0.05	1115.17	12.33	
HYDROGRAPH AT	WC11A	295.	12.17	55.	18.	11.	0.29			
ROUTED TO	RD3510	274.	12.25	55.	18.	11.	0.29	1131.90	12.25	
HYDROGRAPH AT	WC12A	280.	12.17	37.	11.	7.	0.26			
ROUTED TO	RD3511	262.	12.25	37.	11.	7.	0.26	1143.99	12.25	
2 COMBINED AT	CD35.7	536.	12.25	92.	30.	17.	0.55			
ROUTED TO	RD3512	499.	12.33	92.	30.	17.	0.55	1122.15	12.33	
2 COMBINED AT	CD35.6	549.	12.33	100.	32.	18.	0.59			
ROUTED TO	RD3513	530.	12.42	100.	32.	18.	0.59	1101.99	12.42	
2 COMBINED AT	CD35.4	867.	12.42	158.	49.	28.	1.00			
ROUTED TO	RD3514	808.	12.67	158.	49.	28.	1.00	1193.75	12.67	
HYDROGRAPH AT	WC15A	411.	12.17	65.	22.	12.	0.36			
ROUTED TO	RD3515	403.	12.17	65.	22.	12.	0.36	1134.77	12.17	
HYDROGRAPH AT	PM2A	68.	12.17	9.	2.	1.	0.07			
2 COMBINED AT	CD35.8	471.	12.17	74.	24.	14.	0.43			
ROUTED TO	RD3516	455.	12.25	74.	24.	14.	0.43	1123.33	12.25	
HYDROGRAPH AT	WC13A	16.	12.08	2.	1.	0.	0.01			
ROUTED TO	RD3517	15.	12.33	2.	1.	0.	0.01	1131.21	12.33	
HYDROGRAPH AT	WC14A	37.	12.17	5.	1.	1.	0.05			
ROUTED TO	RD3518	32.	12.58	5.	1.	1.	0.05	1133.78	12.58	
HYDROGRAPH AT	PM1A	64.	12.17	7.	2.	1.	0.07			
4 COMBINED AT	CD35.9	542.	12.25	88.	28.	16.	0.56			
ROUTED TO	RD3519	539.	12.25	88.	28.	16.	0.56	1102.22	12.25	
HYDROGRAPH AT	DR35C	435.	12.42	63.	16.	9.	0.60			
4 COMBINED AT	CD35.2	1548.	12.50	360.	109.	63.	2.59			
DIVERSION TO	DIDOB	619.	12.50	140.	40.	23.	2.59			
HYDROGRAPH AT	DI35TH	929.	12.50	220.	69.	40.	2.59			
ROUTED TO	RDI35	917.	12.58	220.	69.	40.	2.59	1082.55	12.58	

HYDROGRAPH AT	CC1	27.	12.08	3.	1.	0.	0.02		
2 COMBINED AT	CPCC1	922.	12.58	223.	70.	41.	2.61		
ROUTED TO	SRCC1	843.	12.75	203.	64.	40.	2.61	1071.90	13.08
DIVERSION TO	DICC2	309.	12.75	69.	18.	10.	2.61		
HYDROGRAPH AT	DICC5	534.	12.75	133.	46.	30.	2.61		
ROUTED TO	RCC5	536.	12.75	133.	46.	30.	2.61	1061.89	12.75
HYDROGRAPH AT	CC5	37.	12.00	3.	1.	0.	0.03		
2 COMBINED AT	CPCC5	536.	12.75	136.	47.	30.	2.64		
ROUTED TO	SRCC5	277.	13.50	103.	41.	27.	2.64	1068.99	13.58
ROUTED TO	RCC6	277.	13.50	103.	41.	27.	2.64	1061.29	13.50
HYDROGRAPH AT	CC6	38.	12.00	3.	1.	0.	0.03		
2 COMBINED AT	CPCC6	277.	13.50	103.	42.	28.	2.67		
ROUTED TO	SRCC6	125.	14.83	66.	32.	21.	2.67	1058.99	41.58
ROUTED TO	RCC7	125.	14.83	66.	32.	21.	2.67	1060.78	14.83
HYDROGRAPH AT	CC7	64.	12.00	6.	1.	1.	0.04		
2 COMBINED AT	ICPCC7	125.	14.83	66.	32.	22.	2.71		
HYDROGRAPH AT	DIDOB	619.	12.50	140.	40.	23.	0.00		
ROUTED TO	RDIDOB	612.	12.58	140.	40.	23.	0.00	1082.34	12.58
HYDROGRAPH AT	CC2	22.	12.00	2.	0.	0.	0.01		
2 COMBINED AT	ICPCC2	612.	12.58	142.	40.	23.	0.01		
HYDROGRAPH AT	DICC2	309.	12.75	69.	18.	10.	0.00		
2 COMBINED AT	CPCC2	905.	12.58	210.	58.	33.	0.01		
ROUTED TO	SRCC2	877.	12.67	206.	58.	33.	0.01	1072.21	12.67
ROUTED TO	RCC3	877.	12.75	206.	58.	33.	0.01	1062.43	12.75
HYDROGRAPH AT	CC3	100.	12.00	9.	2.	1.	0.07		
2 COMBINED AT	CPCC3	878.	12.75	214.	60.	35.	0.08		
ROUTED TO	SRCC3	282.	13.83	143.	54.	34.	0.08	1067.00	13.83
ROUTED TO	RCC4	282.	13.83	143.	54.	34.	0.08	1061.31	13.83
HYDROGRAPH AT	CC4	97.	12.00	8.	2.	1.	0.07		
2 COMBINED AT	CPCC4	282.	13.83	144.	56.	35.	0.15		
ROUTED TO	SRCC4	157.	15.50	100.	44.	28.	0.15	1062.32	15.50
ROUTED TO	RCC7	156.	15.58	100.	44.	28.	0.15	1060.89	15.58
2 COMBINED AT	CPCC7	266.	15.25	165.	75.	50.	2.86		
ROUTED TO	SRCC7	254.	15.75	136.	67.	44.	2.86	1056.25	15.75
DIVERSION TO	GCOVLD	218.	15.67	100.	31.	18.	2.86		
HYDROGRAPH AT	DICC7	36.	15.67	36.	36.	26.	2.86		
ROUTED TO	RPC352	36.	15.75	36.	36.	26.	2.86		
HYDROGRAPH AT	BLSD35	284.	12.08	168.	46.	27.	0.00		
ROUTED TO	RDS35	285.	12.17	168.	46.	27.	0.00		
2 COMBINED AT	CG39	320.	14.33	202.	81.	53.	2.86		
ROUTED TO	RBSD43	320.	14.33	202.	81.	53.	2.86		
HYDROGRAPH AT	CC8	46.	12.00	4.	1.	1.	0.03		
HYDROGRAPH AT	GCOVLD	218.	15.75	100.	31.	18.	0.00		
2 COMBINED AT	GCOL	218.	15.75	100.	32.	18.	0.03		
ROUTED TO	RGCOL	174.	16.58	97.	31.	18.	0.03	1044.34	16.58
HYDROGRAPH AT	SMA43C	168.	12.17	21.	5.	3.	0.13		
ROUTED TO	RB43C2	110.	12.67	21.	5.	3.	0.13	1044.42	12.67
HYDROGRAPH AT	BR43C	280.	12.50	57.	14.	8.	0.35		
2 COMBINED AT	CBR43C	385.	12.58	78.	20.	11.	0.48		
3 COMBINED AT	C43	718.	12.58	339.	132.	82.	3.37		
ROUTED TO	43BAS	222.	17.08	217.	125.	78.	3.37	1032.82	17.08
DIVERSION TO	43SD	222.	0.08	217.	125.	78.	3.37		
HYDROGRAPH AT	43OVLD	0.	0.08	0.	0.	0.	3.37		
ROUTED TO	R43OVL	0.	0.08	0.	0.	0.	3.37	1033.00	0.00
HYDROGRAPH AT	AVR43C	1009.	12.25	143.	38.	22.	1.03		
DIVERSION TO	43C	625.	12.25	120.	32.	18.	1.03		
HYDROGRAPH AT	DIVMD	384.	12.25	24.	6.	3.	1.03		
3 COMBINED AT									

	MDA	454.	14.00	156.	40.	23.	6.45		
DIVERSION TO	DMDA	454.	0.08	156.	40.	23.	6.45		
HYDROGRAPH AT	DUMMY	0.	0.08	0.	0.	0.	6.45		
HYDROGRAPH AT	43C	625.	12.00	120.	32.	18.	0.00		
3 COMBINED AT	SBAS	1399.	14.33	775.	283.	166.	19.29		
ROUTED TO	STOR43	829.	17.83	654.	226.	132.	19.29	1022.72	17.83
DIVERSION TO	43SDS	29.	17.83	29.	29.	18.	19.29		
HYDROGRAPH AT	43W	800.	17.83	625.	197.	114.	19.29		
HYDROGRAPH AT	DMDA	454.	14.00	156.	40.	23.	0.00		
2 COMBINED AT	MD43	988.	15.25	704.	237.	137.	19.29		
ROUTED TO	RMD43	977.	15.50	703.	237.	137.	19.29	1013.67	15.50
HYDROGRAPH AT	VR47C	727.	12.50	126.	32.	18.	0.89		
2 COMBINED AT	CVR47C	977.	15.50	704.	269.	155.	20.18		
ROUTED TO	RBR511	965.	15.67	703.	268.	155.	20.18	1006.38	15.67
HYDROGRAPH AT	AVR51C	214.	12.42	43.	11.	6.	0.28		
ROUTED TO	RBR512	162.	14.08	42.	11.	6.	0.28	1009.93	14.08
HYDROGRAPH AT	BR51C	605.	12.50	94.	23.	14.	0.70		
2 COMBINED AT	CB51	605.	12.50	133.	34.	20.	0.98		
2 COMBINED AT	CB51C	1348.	12.67	731.	302.	175.	21.16		
ROUTED TO	RB1591	1202.	13.00	726.	302.	175.	21.16	998.58	13.00
HYDROGRAPH AT	AVR55C	166.	12.58	36.	9.	5.	0.23		
ROUTED TO	RB1592	124.	14.50	35.	9.	5.	0.23	1003.65	14.50
HYDROGRAPH AT	BR159C	468.	12.58	91.	23.	13.	0.68		
HYDROGRAPH AT	VR59C	176.	12.58	39.	10.	6.	0.25		
ROUTED TO	RB1593	124.	14.33	37.	10.	6.	0.25	1001.73	14.33
4 COMBINED AT	CB159N	1555.	12.92	847.	343.	199.	22.32		
HYDROGRAPH AT	RET43C	906.	12.33	128.	38.	22.	0.00		
ROUTED TO	RS51C	498.	13.83	126.	37.	22.	0.00	1039.97	13.83
HYDROGRAPH AT	SM51C	347.	12.67	75.	19.	11.	0.50		
2 COMBINED AT									

	CS51C	568.	13.83	195.	56.	32.	0.50		
ROUTED TO	RB2591	456.	14.83	189.	56.	32.	0.50	1028.28	14.83
ROUTED TO	RB2592	420.	15.50	185.	56.	32.	0.50	1001.51	15.50
HYDROGRAPH AT	BR259C	700.	12.58	132.	33.	19.	1.00		
2 COMBINED AT	CB259A	702.	12.58	287.	89.	51.	1.50		
HYDROGRAPH AT	DOA55C	711.	12.50	126.	35.	20.	0.00		
ROUTED TO	RO55C	624.	13.08	123.	35.	20.	0.00	1032.73	13.08
HYDROGRAPH AT	OA55C	193.	12.42	33.	8.	5.	0.25		
2 COMBINED AT	CPO55C	702.	13.00	154.	43.	25.	0.25		
ROUTED TO	RD57C	554.	14.08	148.	43.	25.	0.25	1029.62	14.08
HYDROGRAPH AT	DR57C	72.	12.58	16.	4.	2.	0.12		
2 COMBINED AT	CDR57C	566.	14.08	159.	47.	27.	0.37		
ROUTED TO	RD59C	539.	14.33	158.	47.	27.	0.37	1026.93	14.33
HYDROGRAPH AT	DR59C	73.	12.50	15.	4.	2.	0.11		
2 COMBINED AT	CDR59C	544.	14.33	170.	50.	29.	0.48		
ROUTED TO	RB259	523.	14.67	169.	50.	29.	0.48	1018.54	14.67
2 COMBINED AT	CB259S	806.	14.67	452.	139.	81.	1.98		
2 COMBINED AT	CB59	2190.	12.83	1281.	482.	279.	24.30		
ROUTED TO	RB1631	2134.	13.00	1277.	481.	279.	24.30	997.53	13.00
HYDROGRAPH AT	BR263C	319.	12.58	67.	17.	10.	0.50		
2 COMBINED AT	63S	2356.	12.92	1327.	498.	289.	24.80		
HYDROGRAPH AT	BR163C	168.	12.58	36.	9.	5.	0.26		
2 COMBINED AT	CB163C	2491.	12.92	1357.	507.	294.	25.06		
ROUTED TO	RCD1C	2449.	13.08	1353.	506.	294.	25.06	996.02	13.08
HYDROGRAPH AT	BR67C	98.	12.33	18.	5.	3.	0.13		
ROUTED TO	RCD1C2	69.	13.67	17.	5.	3.	0.13	993.33	13.67
HYDROGRAPH AT	CD1C	407.	12.50	69.	17.	10.	0.47		
3 COMBINED AT	CPCD1C	2635.	13.00	1414.	528.	307.	25.66		
ROUTED TO	RCD2C1	2517.	13.25	1400.	527.	306.	25.66	990.23	13.25

+	HYDROGRAPH AT	CD2C	500.	12.50	92.	23.	13.	0.58	
+	2 COMBINED AT	CCD2C1	2684.	13.25	1440.	549.	319.	26.24	
+	HYDROGRAPH AT	RIR63B	45.	11.83	45.	20.	12.	0.00	
+ +	ROUTED TO	RIR65C	45.	13.17	45.	20.	12.	0.00	5.81 13.42
+	HYDROGRAPH AT	IR65C	90.	12.58	23.	6.	3.	0.17	
+	2 COMBINED AT	CIR65C	134.	12.67	65.	26.	15.	0.17	
+ +	ROUTED TO	RIRDC	129.	12.92	64.	26.	15.	0.17	1014.15 12.92
+	DIVERSION TO	RIR65C	98.	12.67	42.	19.	11.	0.17	
+	HYDROGRAPH AT	DIIRDC	31.	12.67	22.	7.	4.	0.17	
+	HYDROGRAPH AT	IRDC	235.	12.92	69.	17.	10.	0.52	
+	2 COMBINED AT	CIRDC	266.	12.92	89.	24.	14.	0.69	
+ +	ROUTED TO	RIRSMC	241.	13.83	85.	24.	14.	0.69	1006.00 13.83
+	HYDROGRAPH AT	IRSMC	173.	12.33	27.	7.	4.	0.25	
+	2 COMBINED AT	CIRSMC	251.	13.75	106.	31.	18.	0.94	
+ +	ROUTED TO	RCD2C2	244.	14.08	104.	31.	18.	0.94	988.06 14.08
+	2 COMBINED AT	CCD2C2	2757.	13.25	1540.	580.	337.	27.18	
+ +	ROUTED TO	RCD3C1	2649.	13.50	1531.	579.	337.	27.18	986.15 13.50
+	HYDROGRAPH AT	A67AC	379.	12.67	84.	21.	12.	0.61	
+ +	ROUTED TO	RCD4C1	344.	13.42	84.	21.	12.	0.61	984.60 13.42
+	HYDROGRAPH AT	CD4C	129.	12.58	26.	6.	4.	0.19	
+	2 COMBINED AT	CPCD4C	387.	13.33	109.	27.	16.	0.80	
+ +	ROUTED TO	RCD3C2	300.	14.92	105.	27.	16.	0.80	984.55 14.92
+	HYDROGRAPH AT	CD3C	337.	12.58	70.	18.	10.	0.48	
+ 1	3 COMBINED AT	CPCD3C	2773.	13.42	1657.	623.	363.	28.46	

SUMMARY OF KINEMATIC WAVE - MUSKINGUM-CUNGE ROUTING
(FLOW IS DIRECT RUNOFF WITHOUT BASE FLOW)

ISTAQ	ELEMENT	DT	PEAK	TIME TO PEAK	VOLUME	INTERPOLATED TO COMPUTATION DT	INTERVAL PEAK	TIME TO PEAK	VOLUME
		(MIN)	(CFS)	(MIN)	(IN)	(MIN)	(CFS)	(MIN)	(IN)
RBLSD7	MANE	5.00	108.54	750.00	-1.00	5.00	108.54	750.00	-1.00
RSD19	MANE	5.00	158.18	755.00	-1.00	5.00	158.18	755.00	-1.00
RSD27	MANE	5.00	156.28	765.00	-1.00	5.00	156.28	765.00	-1.00
RPC352	MANE	5.00	36.03	945.00	0.58	5.00	36.03	945.00	0.58

CONTINUITY SUMMARY (AC-FT) - INFLOW=0.8857E+02 EXCESS=0.0000E+00 OUTFLOW=0.8828E+02 BASIN STORAGE=0.2975E+00 PERCENT ERROR= 0.0

RDS35	MANE	2.80	284.71	730.14	-1.00	5.00	284.56	730.00	-1.00
RBSD43	MANE	1.36	319.95	861.85	1.18	5.00	319.86	860.00	1.19

CONTINUITY SUMMARY (AC-FT) - INFLOW=0.1808E+03 EXCESS=0.0000E+00 OUTFLOW=0.1807E+03 BASIN STORAGE=0.1125E+00 PERCENT ERROR= 0.0

*** NORMAL END OF HEC-1 ***

LAVEEN AREA DRAINAGE MASTER STUDY

HIDDEN VALLEY WATERSHED EXISTING CONDITION HYDROLOGY MODEL

FILE NAME: HDNVLLY.DAT

DECEMBER 7, 2000

```
1*****************************************
*                                       *
*   FLOOD HYDROGRAPH PACKAGE  (HEC-1)   *
*             MAY  1991                 *
*          VERSION 4.0.1E               *
*     Lahey F77L-EM/32 version 5.01     *
*       Dodson & Associates, Inc.       *
*  RUN DATE  11/15/00  TIME  09:00:58   *
*****************************************
```

```
**************************************
*                                    *
*   U.S. ARMY CORPS OF ENGINEERS     *
*   HYDROLOGIC ENGINEERING CENTER    *
*        609 SECOND STREET           *
*     DAVIS, CALIFORNIA 95616        *
*        (916) 551-1748              *
*                                    *
**************************************
```

```
X    X  XXXXXXX   XXXXX          X
X    X  X       X     X        XX
X    X  X             X       X X
XXXXXX  XXXX        X      XXXXX X
X    X  X           X           X
X    X  X          X      X     X
X    X  XXXXXXX   XXXXX         XXX
```

THIS PROGRAM REPLACES ALL PREVIOUS VERSIONS OF HEC-1 KNOWN AS HEC1 (JAN 73), HEC1GS, HEC1DB, AND HEC1KW.

THE DEFINITIONS OF VARIABLES -RTIMP- AND -RTIOR- HAVE CHANGED FROM THOSE USED WITH THE 1973-STYLE INPUT STRUCTURE.
THE DEFINITION OF -AMSKK- ON RM-CARD WAS CHANGED WITH REVISIONS DATED 28 SEP 81. THIS IS THE FORTRAN77 VERSION
NEW OPTIONS: DAMBREAK OUTFLOW SUBMERGENCE , SINGLE EVENT DAMAGE CALCULATION, DSS:WRITE STAGE FREQUENCY,
DSS:READ TIME SERIES AT DESIRED CALCULATION INTERVAL LOSS RATE:GREEN AND AMPT INFILTRATION
KINEMATIC WAVE: NEW FINITE DIFFERENCE ALGORITHM


```
LINE          ID.....1.....2.....3.....4.....5.....6.....7.....8.....9.....10
    1         ID    LAVEEN ADMS (FINAL HEC-1) 100-YR 24-HR STORM          CBA FILE # 40916-02-30
    2         ID    HIDDEN VALLEY WATERSHED/CHAMPION DRAIN WATERSHED
    3         ID    INPUT FILE NAME  HDNVLLY.DAT (FORMERLY CHAMPION24)     DATE: NOVEMBER 2000
    4         ID    FILE NAME CHANGED BY PROJECT ENGINEERING CONSULTANTS, LTD. FOR LAVEEN ADMP
    5         ID    24-HOUR SCS TYPE II RAINFALL
              *DIAGRAM
    6         IT      5                   300
    7         IO      3       0

    8         KK  WC16B
    9         KM  SUB-BASIN WC16B -LAND USE - NATURAL DESERT HILLSLOPES,MINOR DEVELOPMENT
   10         KM  24-HOUR TYPE II RAINFALL WAS USED TO FIND TC & R FOR THIS BASIN
   11         KM  THIS BASIN USED RAINFALL REDUCTION FACTOR OF .97
   12         BA   .023
   13         IN     30
   14         KM  RAINFALL DEPTH OF 4.20 WAS SPACIALLY REDUCED AS SHOWN ON THE PB RECORD
   15         PB  4.074
   16         KM  THE FOLLOWING PC RECORDS REPRESENT A 24-HR SCS TYPE II STORM
   17         PC   .000   .005   .011   .016   .022   .028   .035   .041   .048   .056
   18         PC   .068   .071   .080   .089   .098   .109   .120   .133   .147   .163
   19         PC   .181   .204   .235   .283   .663   .735   .772   .799   .820   .838
   20         PC   .854   .868   .880   .891   .902   .912   .921   .929   .937   .945
   21         PC   .952   .959   .965   .972   .978   .984   .989   .995  1.000
   22         LG   .150   .255  7.200   .123   .000
   23         UC   .233   .266
   24         UA     0     3      5      8     12     20     43     75     90     96
   25         UA   100

   26         KK  RRHV1
   27         KM  ROUTE FLOW FROM SUB-BASIN WC16B TO COMPUTATION POINT CPHV1
   28         RS      1    ELEV   1141
   29         RC  0.035  0.040  0.035    540  0.011   1146
   30         RX      0     25     80    120    140    170    240    310
   31         RY   1146   1144   1142   1141   1141   1142   1144   1146

   32         KK  WC17B
   33         KM  SUB-BASIN WC17B -LAND USE - DESERT MOUNTAIN,DESERT HILLS;MINOR DEVELOPMENT
   34         KM  24-HOUR TYPE II RAINFALL WAS USED TO FIND TC & R FOR THIS BASIN
   35         KM  THIS BASIN USED RAINFALL REDUCTION FACTOR OF .97
   36         BA   .035
   37         LG   .150   .276  4.050   .361  5.000
   38         UC   .267   .424
   39         UA     0     3      5      8     12     20     43     75     90     96
   40         UA   100

   41         KK  RRHV2
   42         KM  ROUTE FLOW FROM SUB-BASIN WC17B TP COMPUTATION POINT CPHV1
   43         RS      1    ELEV   1140
   44         RC  0.035  0.040  0.035    230  0.030   1142
   45         RX      0     40     80     90    100    110    150    190
   46         RY   1143   1142   1140   1140   1140   1140   1141   1142
```



```
LINE          ID.....1.....2.....3.....4.....5.....6.....7.....8.....9.....10
   47         KK  CPHV1
   48         KM  COMBINE ROUTED FLOW FROM SUB-BASINS WC16B AND WC17B
   49         HC     2

   50         KK  RRHV3
   51         KM  ROUTE FLOW FROM COMPUTATION POINT CPHV1 TO COMPUTATION POINT CPHV2(1ST REACH)
   52         RS      1    ELEV   1137
   53         RC  0.035  0.040  0.035    400  0.010   1140
   54         RX      0     30     40     60     70    110    150    180
   55         RY   1141   1140   1138   1137   1137   1138   1139   1140

   56         KK  RRHV4
   57         KM  ROUTE FLOW FROM COMPUTATION POINT CPHV1 TO COMPUTATION POINT CPHV2(2ND REACH)
   58         RS      1    ELEV   1141
   59         RC  0.035  0.040  0.035    400  0.010   1146
   60         RX      0     50    100    130    150    170    220    290
   61         RY   1146   1144   1142   1141   1141   1142   1144   1146

   62         KK  WC18B
   63         KM  SUB-BASIN WC18B -LAND USE - NATURAL DESERT HILLSLOPES,MINOR DEVELOPMENT
   64         KM  24-HOUR TYPE II RAINFALL WAS USED TO FIND TC & R FOR THIS BASIN
   65         KM  THIS BASIN USED RAINFALL REDUCTION FACTOR OF .97
   66         BA   .060
   67         LG   .150   .265  4.100   .236   .000
   68         UC   .300   .338
   69         UA     0     3      5      8     12     20     43     75     90     96
   70         UA   100

   71         KK  RRHV5
   72         KM  ROUTE FLOW FROM SUB-BASIN WC18B TO COMPUTATION POINT CPHV2
   73         RS      1    ELEV   1136
   74         RC  0.035  0.040  0.035    650  0.017   1140
   75         RX      0     60    120    140    160    190    220    240
   76         RY   1140   1139   1138   1136   1136   1138   1139   1140

   77         KK  WC19B
   78         KM  SUB-BASIN WC19B -LAND USE - DESERT MOUNTAIN,DESERT HILLS;MINOR DEVELOPMENT
   79         KM  24-HOUR TYPE II RAINFALL WAS USED TO FIND TC & R FOR THIS BASIN
   80         KM  THIS BASIN USED RAINFALL REDUCTION FACTOR OF .97
   81         BA   .210
   82         LG   .150   .276  3.520   .265  40.000
   83         UC   .217   .162
   84         UA     0     3      5      8     12     20     43     75     90     96
   85         UA   100

   86         KK  RRHV6
   87         KM  ROUTE FLOW FROM SUB-BASIN WC19B TO COMPUTATION POINT CPHV2
   88         RS      1    ELEV   1137
   89         RC  0.035  0.040  0.035    640  0.018   1139
   90         RX      0     10     30     45     60     75    110    140
   91         RY   1139 1138.5   1138   1137   1137   1138   1139   1140
```



```
LINE          ID.....1.....2.....3.....4.....5.....6.....7.....8.....9.....10
   92         KK   PM3B
   93         KM  SUB-BASIN PM3B -LAND USE - NATURAL DESERT HILLSLOPES,MINOR DEVELOPMENT
   94         KM  24-HOUR TYPE II RAINFALL WAS USED TO FIND TC & R FOR THIS BASIN
   95         KM  THIS BASIN USED RAINFALL REDUCTION FACTOR OF .97
   96         BA   .060
   97         LG   .150   .345  3.100   .946  5.000
   98         UC   .283   .273
   99         UA     0     3      5      8     12     20     43     75     90     96
  100         UA   100

  101         KK  CPHV2
  102         KM  COMBINE ROUTED FLOW FROM CPHV1, WC18B, WC19B WITH RUNOFF FROM SUB-BASIN PM3B
  103         HC     4

  104         KK  RRHV7
  105         KM  ROUTE FLOW FROM COMPUTATION CPHV2 TO COMPUTATION POINT CPHV3
  106         RS      1    ELEV   1126
  107         RC  0.035  0.040  0.035    750  0.011   1130
  108         RX      0     40     90    160    190    210    250    390
  109         RY   1130   1129   1128   1126   1126   1128   1132   1133

  110         KK  WC20B
  111         KM  SUB-BASIN WC20B -LAND USE - NATURAL DESERT HILLSLOPES,MINOR DEVELOPMENT
  112         KM  24-HOUR TYPE II RAINFALL WAS USED TO FIND TC & R FOR THIS BASIN
  113         KM  THIS BASIN USED RAINFALL REDUCTION FACTOR OF .97
  114         BA   .014
  115         LG   .150   .250  8.600   .066   .000
  116         UC   .233   .259
  117         UA     0     3      5      8     12     20     43     75     90     96
  118         UA   100

  119         KK  RRHV8
  120         KM  ROUTE FLOW FROM SUB-BASIN WC20B TO COMPUTATION POINT CPHV3
  121         RS      1    ELEV   1132
  122         RC  0.035  0.035  0.035    850  0.022  1134.5
  123         RX      0     10     20     30     40     60    170    220
  124         RY 1134.5   1134   1133   1132   1132   1134   1134 1134.5

  125         KK  CPHV3
  126         KM  COMBINE ROUTED FLOWS FROM SUB-BASIN WC20B AND  COMPUTATION POINT CPHV3
```

```
     HC      2

     KK  RRHV9
     KM  ROUTE FLOW FROM COMPUTATION CPHV3 TO COMPUTATION POINT CPHV4
     RS      1    ELEV    1121
     RC  0.035   0.040   0.035     780   0.008   1126
     RX      0     100     130     150     165     180     290     350
     RY   1126    1124    1122    1121    1121    1122    1124    1126
                                HEC-1 INPUT                                    PAGE  4
1
LINE      ID.....1.....2.....3.....4.....5.....6.....7.....8.....9.....10

     KK  WC21B
     KM  SUB-BASIN WC21B -LAND USE - NATURAL DESERT HILLSLOPES,MINOR DEVELOPMENT
     KM  24-HOUR TYPE II RAINFALL WAS USED TO FIND TC & R FOR THIS BASIN
     KM  THIS BASIN USED RAINFALL REDUCTION FACTOR OF .97
     BA   .024
     LG   .150    .265   4.100    .236    .000
     UC   .283    .382
     UA      0       3       5       8      12      20      43      75      90      96
     UA    100

     KK  RRHV10
     KM  ROUTE FLOW FROM SUB-BASIN WC21B TO COMPUTATION POINT CPHV4
     RS      2    ELEV    1129
     RC  0.035   0.035   0.035    1110   0.022   1130
     RX      0      25      50      75     100     125     175     200
     RY   1130 1129.75  1129.5    1129    1129 1129.5 1129.75    1130

     KK   PM4B
     KM  SUB-BASIN PM4B -LAND USE - NATURAL DESERT HILLSLOPES,MINOR DEVELOPMENT
     KM  24-HOUR TYPE II RAINFALL WAS USED TO FIND TC & R FOR THIS BASIN
     KM  THIS BASIN USED RAINFALL REDUCTION FACTOR OF .97
     BA   .140
     LG   .150    .327   3.450    .764  15.000
     UC   .283    .188
     UA      0       3       5       8      12      20      43      75      90      96
     UA    100

     KK  CPHV4
     KM  COMBINE ROUTED FLOWS FROM SUB-BASINS WC21B PM4B AND  COMPUTATION POINT CPHV4
     HC      3

     KK  RRHV11
     KM  ROUTE FLOW FROM COMPUTATION CPHV4 TO COMPUTATION POINT CPHV5
     RS      1    ELEV    1116
     RC  0.035   0.040   0.035     340   0.006   1121
     RX      0     100     150     170     190     220     280     340
     RY   1121    1120    1118    1116    1116    1118    1120    1121

     KK  WC22B
     KM  SUB-BASIN WC22B -LAND USE - NATURAL DESERT HILLSLOPES,MINOR DEVELOPMENT
     KM  24-HOUR TYPE II RAINFALL WAS USED TO FIND TC & R FOR THIS BASIN
     KM  THIS BASIN USED RAINFALL REDUCTION FACTOR OF .97
     BA   .007
     LG   .150    .260   5.800    .179    .000
     UC   .217    .304
     UA      0       3       5       8      12      20      43      75      90      96
     UA    100

     KK  RRHV12
     KM  ROUTE FLOW FROM SUB-BASIN WC22B TO COMPUTATION POINT CPHV5
     RS      3    ELEV  1123.5
     RC  0.035   0.040   0.035    1020   0.023  1124.5
     RX      0      30      70      90     100     120     135     160
     RY  1124.5    1124  1123.5  1123.5  1123.5  1123.5    1124  1124.5
                                HEC-1 INPUT                                    PAGE  5
1
LINE      ID.....1.....2.....3.....4.....5.....6.....7.....8.....9.....10

     KK  CPHV5
     KM  COMBINE ROUTED FLOWS FROM SUB-BASIN WC22B AND  COMPUTATION POINT CPHV4
     HC      2

     KK  RRHV13
     KM  ROUTE FLOW FROM COMPUTATION CPHV5 TO COMPUTATION POINT CPHV6
     RS      1    ELEV    1114
     RC  0.035   0.040   0.035     430   0.005   1116
     RX      0      70     130     160     180     220     340     410
     RY   1117    1116    1116    1114    1114    1115    1115    1116

     KK  WC23B
     KM  SUB-BASIN WC23B -LAND USE - DESERT MOUNTAIN,DESERT HILLS;MINOR DEVELOPMENT
     KM  24-HOUR TYPE II RAINFALL WAS USED TO FIND TC & R FOR THIS BASIN
     KM  THIS BASIN USED RAINFALL REDUCTION FACTOR OF .97
     BA   .400
     LG   .150    .300   4.120    .253  60.000
     UC   .300    .247
     UA      0       3       5       8      12      20      43      75      90      96
     UA    100

     KK  RRHV14
     KM  ROUTE FLOW FROM SUB-BASIN WC23B AND TO COMPUTATION POINT CPHV6
```

```
     RS      1    ELEV    1120
     RC  0.035   0.035   0.035    1020   0.027  1122.5
     RX      0      40      80     100     120     140     170     210
     RY  1122.5    1122  1121.5    1120    1120  1121.5    1122  1122.5

     KK  CPHV6
     KM  COMBINE ROUTED FLOWS FROM SUB-BASIN WC23B AND  COMPUTATION POINT CPHV5
     HC      2

     KK  RRHV15
     KM  ROUTE FLOW FROM COMPUTATION CPHV6 TO COMPUTATION POINT CPHV7
     RS      2    ELEV    1105
     RC  0.035   0.040   0.035    1980   0.008   1110
     RX      0     170     430     470     490     530     580     630
     RY   1110    1106    1106    1105    1105    1106    1108    1110

     KK   PM5B
     KM  SUB-BASIN PM5B -LAND USE - NATURAL DESERT HILLSLOPES,MINOR DEVELOPMENT
     KM  24-HOUR TYPE II RAINFALL WAS USED TO FIND TC & R FOR THIS BASIN
     KM  THIS BASIN USED RAINFALL REDUCTION FACTOR OF .97
     BA   .130
     LG   .150    .310   4.200    .518  15.000
     UC   .433    .307
     UA      0       3       5       8      12      20      43      75      90      96
     UA    100
                                HEC-1 INPUT                                    PAGE  6
1
LINE      ID.....1.....2.....3.....4.....5.....6.....7.....8.....9.....10

     KK  CPHV7
     KM  COMBINE ROUTED FLOWS FROM SUB-BASIN PM5B AND  COMPUTATION POINT CPHV6
     HC      2

     KK  RRHV16
     KM  ROUTE FLOW FROM COMPUTATION CPHV7 TO COMPUTATION POINT CPHV8
     RS      1    ELEV    1097
     RC  0.065   0.065   0.065     400   0.008   1100
     RX      0     210     315     430     540     640     800     930
     RY   1100    1098    1098    1097    1097    1098    1099    1100

     KK  A43A2B
     KM  SUB-BASIN A43A2B -LAND USE - DESERT MOUNTAIN,DESERT HILLS;MINOR DEVELOPMENT
     KM  24-HOUR TYPE II RAINFALL WAS USED TO FIND TC & R FOR THIS BASIN
     KM  THIS BASIN USED RAINFALL REDUCTION FACTOR OF .97
     BA   .090
     LG   .150    .279   6.300    .174  30.000
     UC   .317    .274
     UA      0       3       5       8      12      20      43      75      90      96
     UA    100

     KK  RRHV17
     KM  ROUTE FLOW FROM SUB-BASIN A43A2B TO COMPUTATION POINT CPHV8
     RS      1    ELEV    1099
     RC  0.065   0.065   0.065     440   0.015   1100
     RX      0     105     135     165     190     210     260     320
     RY   1100    1099    1099    1099    1099    1099    1099    1100

     KK  CPHV8
     KM  COMBINE ROUTED FLOWS FROM SUB-BASIN A43A2B AND  COMPUTATION POINT CPHV7
     HC      2

     KK  RRHV18
     KM  ROUTE FLOW FROM COMPUTATION CPHV8 TO COMPUTATION POINT CPHV10
     RS      3    ELEV    1086
     RC  0.065   0.065   0.065    2200   0.008   1088
     RX      0      80     200     300     360     440     550     610
     RY   1088    1086    1086    1086    1086    1086    1086    1088

     KK  NWSM1B
     KM  SUB-BASIN NWSM1B -LAND USE - DESERT MOUNTAIN;UNDEVELOPED
     KM  24-HOUR TYPE II RAINFALL WAS USED TO FIND TC & R FOR THIS BASIN
     KM  THIS BASIN USED RAINFALL REDUCTION FACTOR OF .97
     BA   .130
     LG   .150    .345   2.500   1.143  60.000
     UC   .267    .226
     UA      0       3       5       8      12      20      43      75      90      96
     UA    100
                                HEC-1 INPUT                                    PAGE  7
1
LINE      ID.....1.....2.....3.....4.....5.....6.....7.....8.....9.....10

     KK  RR43B1
     KM  ROUTE FLOW FROM SUB-BASIN NWSM1B TO COMPUTATION POINT CPHV9 (1ST REACH)
     RS      1    ELEV    1168
     RC  0.035   0.040   0.035    1850    0.47   1172
     RX      0      40     100     120     135     150     190     240
     RY   1172  1171.5    1170    1168    1168    1170  1171.5    1172

     KK  RR43B2
     KM  ROUTE FLOW FROM SUB-BASIN NWSM1B TO COMPUTATION POINT CPHV9 ( 2ND REACH )
     RS      2    ELEV    1118
     RC  0.035   0.040   0.035    1000   0.034   1120
     RX      0      50     110     410     580     850     970    1160
```

```
277          RY   1120    1119    1119    1118    1118    1118    1119    1120

278          KK  A43A1B
279          KM   SUB-BASIN A43A1B -LAND USE - DESERT MOUNTAINS,DESERT HILLS;MINOR DEVELOPMENT
280          KM   24-HOUR TYPE II RAINFALL WAS USED TO FIND TC & R FOR THIS BASIN
281          KM   THIS BASIN USED RAINFALL REDUCTION FACTOR OF .97
282          BA    .170
283          LG    .150    .285   4.100    .463  15.000
284          UC    .283    .151
285          UA       0       3       5       8      12      20      43      75      90      96
286          UA     100

287          KK   CPHV9
288          KM   COMBINE ROUTED FLOW FROM SUB-BASIN NWSM1B WITH RUNOFF FROM SUB-BASIN A43A1B
289          HC       2

290          KK  RRHV19
291          KM   ROUTE FLOW FROM COMPUTATION CPHV9 TO COMPUTATION POINT CPHV10
292          RS       5    ELEV    1091
293          RC   0.065   0.065   0.065    1700   0.014    1092
294          RX       0      60     450     530     610     690     830     960
295          RY    1092    1091    1091    1091    1091    1091    1091    1092

296          KK  CPHV10
297          KM   COMBINE ROUTED FLOWS FROM COMPUTATION POINTS CPHV8 AND CPHV9
298          HC       2

299          KK  RRHV20
300          KM       ROUTE FLOW FROM COMPUTATION CPHV10 TO COMPUTATION POINT CPHV11
301          RS       2    ELEV  1074.5
302          RC   0.065   0.065   0.065    1100  0.0085    1078
303          RX       0      90     480     510     520     530     870    1300
304          RY    1078    1076  1074.5  1074.5  1074.5  1074.5    1076    1078

305          KK   ED47B
306          KM   SUB-BASIN ED47B -LAND USE - AGRICULTURE,DESERT MOUNTAIN,DESERT HILLS;MODERATE
307          KM   DEVELOPMENT
308          KM   24-HOUR TYPE II RAINFALL WAS USED TO FIND TC & R FOR THIS BASIN
309          KM   THIS BASIN USED RAINFALL REDUCTION FACTOR OF .97
310          BA    .810
311          LG    .330    .094   4.100    .629  10.000
312          UC    .283    .114
```


HEC-1 INPUT

```
LINE         ID.....1.....2.....3.....4.....5.....6.....7.....8.....9.....10

313          UA       0       3       5       8      12      20      43      75      90      96
314          UA     100

315          KK  CPHV11
316          KM   COMBINE ROUTED FLOWS FROM COMPUTATION POINT CPHV10 TO RUNOFF FROM SUB-BASIN
317          KM   ED47B
318          HC       2

319          KK  DFED47
320          KM   RATE CHANNEL CROSSECTION AT COMPUTATION POINT ED47B FOR SPLIT FLOW
321          KM   DIVERTED FLOW IS ROUTED THROUGH SUB BASIN IR55B
322          DT  DIR55B
323          DI       0     139     558    1324    2507
324          DQ       0      20     126     372     801

325          KK  RRHV21
326          KM   ROUTE FLOW FROM COMPUTATION POINT CPHV11 TO COMPUTATION POINT CPHV12
327          KM   (1ST REACH)
328          RS       5    ELEV  1059.5
329          RC   0.015   0.065   0.065    2660   0.006  1060.7
330          RX       0      30      60     150     180     600     660     690
331          RY  1060.7  1060.0    1060    1060  1059.5  1059.5    1060  1060.7

332          KK  RRHV22
333          KM   ROUTE FLOW FROM COMPUTATION POINT CPHV11 TO COMPUTATION POINT CPHV12
334          KM    (2ND REACH)
335          RS       7    ELEV  1039.5
336          RC     .07     .07     .07    2724   0.007  1040.1
337          RX       0     230     700     701    1260    1261    1480    1520
338          RY  1040.1    1039  1039.5  1039.5  1039.5  1039.5    1040  1040.1

339          KK   IR59B
340          KM   SUB-BASIN IR59B -LAND USE - AGRICULTURE; MINOR DEVELOPMENT
341          KM   24-HOUR TYPE II RAINFALL WAS USED TO FIND TC & R FOR THIS BASIN
342          KM   THIS BASIN USED RAINFALL REDUCTION FACTOR OF .97
343          BA    .660
344          LG    .500    .000   3.990    .636    .000
345          UC    .883    .610
346          UA       0     1.6       5    10.6    19.5      32      44      56      70      82
347          UA     100

348          KK  CPHV12
349          KM    COMBINE ROUTED FLOW FROM COMPUTATION POINT CPHV11 TO RUNOFF FROM SUB-BASIN
350          KM    IR59B
351          HC       2

352          KK  DIHV12
353          KM    THE WESTERN EDGE OF SUB-BASIN IR59B WHICH IS ALSO THE WESTERN EDGE OF THE
354          KM    STUDY AREA IS BOUNDED  BY A CONCRETE IRRIGATION CANAL AND EARTHEN ROADWAY
355          KM    THE EARTHEN ROADWAY HAS A CAPACITY TO CONVEY  APPROXIMATELY 65 CFS TO THE
356          KM    NORTH WEST BEFORE THE CONCRETE IRRIGATION CANAL IS OVERTOPPED AND FLOW
357          KM    CONTINUES TO DRAIN TO THE WEST. THEREFORE APPROXIMATELY 65 CFS WILL
358          KM    CONCENTRATE AT COMPUTATION POINT CPHV12. AT COMPUTATION POINT CPHV12
359          KM    A DIP SECTION IN THE EARTHEN ROADWAY WILL DRAIN APPROXIMATELY 684 CFS
360          KM    TO THE WEST. ALL OF THE FLOW CONCENTRATED AT COMPUTATION CPHV12 PASSES
```


HEC-1 INPUT

```
LINE         ID.....1.....2.....3.....4.....5.....6.....7.....8.....9.....10

361          KM    OUT OF THE STUDY AREA.
362          DT  RCHV12
363          DI       0     100     200     400     600     800     900    1000    1200    1400
364          DQ       0     100     200     400     600     800     900    1000    1200    1400

365          KK  REED47
366          KM   RETRIVE DIVERTED FLOW FROM COMPUTATION POINT CPHV11
367          DR  DIR55B

368          KK  RRHV23
369          KM   ROUTE DIVERTED FLOW FROM COMPUTATION POINT CPHV11 THROUGH SUB-BASIN IR55B
370          RS      19    ELEV    1061
371          RC    0.07    0.07    0.07    4800   0.006
372          RX       0     240     470     620     830    1200    1520    1740
373          RY    1062    1061    1061    1061    1061    1061    1061    1062

374          KK   IR55B
375          KM   SUB-BASIN IR55B -LAND USE - AGRICULTURE;MINOR DEVELOPMENT
376          KM   24-HOUR TYPE II RAINFALL WAS USED TO FIND TC & R FOR THIS BASIN
377          KM   THIS BASIN USED RAINFALL REDUCTION FACTOR OF .97
378          BA    .530
379          LG    .480    .079   3.650    .502   5.000
380          UC    .850    .554
381          UA       0       3       5       8      12      20      43      75      90      96
382          UA     100

383          KK  CIR55B
384          KM    COMBINE ROUTED DIVERTED FLOW FROM COMPUTATION POINT CPHV11 WITH RUNOFF FROM
385          KM    SUB-BASIN IR55B
386          HC       2

387          KK  DIR55B
388          KM    THE WESTERN EDGE OF SUB-BASIN IR55B WHICH IS ALSO THE WESTERN EDGE OF THE
389          KM    STUDY AREA IS BOUNDED BY AN EARTHEN IRRIGATION CANAL. MINOR CONTAINMENT OF
390          KM    RUNOFF AND ROUTED FLOW WILL BE REALIZED. THEREFORE TOTAL FLOW AT COMPUTATION
391          KM    POINT CIR55B IS DIVERTED BECAUSE FLOW FROM THIS POINT DOES NOT CONTRIBUTE
392          KM    TO RUNOFF COMPUTATIONS DOWNSTREAM.
393          DT  RCIREB
394          DI       0     100     200     400     600     800
395          DQ       0     100     200     400     600     800
396          ZZ
```

1
1

RUNOFF SUMMARY
FLOW IN CUBIC FEET PER SECOND
TIME IN HOURS, AREA IN SQUARE MILES

	OPERATION	STATION	PEAK FLOW	TIME OF PEAK	AVERAGE FLOW FOR MAXIMUM PERIOD 6-HOUR	24-HOUR	72-HOUR	BASIN AREA	MAXIMUM STAGE	TIME OF MAX STAGE
+	HYDROGRAPH AT	WC16B	33.	12.08	4.	1.	1.	0.02		
+	ROUTED TO	RRHV1	32.	12.17	4.	1.	1.	0.02	1141.45	12.17
+	HYDROGRAPH AT	WC17B	35.	12.17	5.	1.	1.	0.04		
+	ROUTED TO	RRHV2	35.	12.17	5.	1.	1.	0.04	1140.32	12.17
+	2 COMBINED AT	CPHV1	67.	12.17	9.	2.	2.	0.06		
+	ROUTED TO	RRHV3	66.	12.17	9.	2.	2.	0.06	1137.82	12.17
+	ROUTED TO	RRHV4	65.	12.25	9.	2.	2.	0.06	1141.72	12.25
+	HYDROGRAPH AT	WC18B	72.	12.17	9.	2.	2.	0.06		
+	ROUTED TO	RRHV5	71.	12.17	9.	2.	2.	0.06	1136.73	12.17
+	HYDROGRAPH AT	WC19B	350.	12.08	44.	14.	13.	0.21		
+	ROUTED TO	RRHV6	349.	12.08	44.	14.	13.	0.21	1138.57	12.08
+	HYDROGRAPH AT	PM3B	46.	12.17	5.	1.	1.	0.06		
+	4 COMBINED AT	CPHV2	516.	12.08	67.	20.	19.	0.39		
+	ROUTED TO	RRHV7	508.	12.17	67.	20.	19.	0.39	1127.74	12.17
+	HYDROGRAPH AT	WC20B	21.	12.08	3.	1.	1.	0.01		
+	ROUTED TO	RRHV8	21.	12.17	3.	1.	1.	0.01	1132.45	12.17
+	2 COMBINED AT	CPHV3	528.	12.17	70.	20.	20.	0.40		
+	ROUTED TO	RRHV9	523.	12.17	70.	20.	20.	0.40	1123.09	12.17
+	HYDROGRAPH AT	WC21B	27.	12.17	4.	1.	1.	0.02		
+	ROUTED TO	RRHV10	26.	12.25	4.	1.	1.	0.02	1129.29	12.25
+	HYDROGRAPH AT	PM4B	151.	12.08	17.	5.	5.	0.14		
+	3 COMBINED AT	CPHV4	695.	12.17	91.	26.	25.	0.57		
+	ROUTED TO	RRHV11	692.	12.17	91.	26.	25.	0.57	1118.75	12.17
+	HYDROGRAPH AT	WC22B	9.	12.08	1.	0.	0.	0.01		
+	ROUTED TO	RRHV12	9.	12.25	1.	0.	0.	0.01	1123.62	12.25
+	2 COMBINED AT	CPHV5	700.	12.17	92.	26.	25.	0.57		
+	ROUTED TO	RRHV13	686.	12.17	92.	26.	25.	0.57	1115.86	12.17
+	HYDROGRAPH AT	WC23B	604.	12.17	97.	32.	31.	0.40		
+	ROUTED TO	RRHV14	604.	12.17	97.	32.	31.	0.40	1121.74	12.17
+	2 COMBINED AT	CPHV6	1290.	12.17	189.	58.	56.	0.97		
+	ROUTED TO	RRHV15	1217.	12.25	188.	58.	56.	0.97	1106.76	12.25
+	HYDROGRAPH AT	PM5B	134.	12.25	18.	5.	5.	0.13		
+	2 COMBINED AT	CPHV7	1351.	12.25	207.	63.	61.	1.10		
+	ROUTED TO	RRHV16	1345.	12.33	207.	63.	61.	1.10	1098.72	12.33
+	HYDROGRAPH AT	A43A2B	127.	12.17	18.	5.	5.	0.09		
+	ROUTED TO	RRHV17	123.	12.17	18.	5.	5.	0.09	1099.44	12.17
+	2 COMBINED AT	CPHV8	1450.	12.33	224.	69.	66.	1.19		
+	ROUTED TO	RRHV18	1325.	12.50	224.	68.	65.	1.19	1087.18	12.50
+	HYDROGRAPH AT	NWSM1B	168.	12.08	28.	9.	9.	0.13		
+	ROUTED TO	RR43B1	166.	12.17	28.	9.	9.	0.13	1168.55	12.17
+	ROUTED TO	RR43B2	161.	12.17	28.	9.	9.	0.13	1118.16	12.17
+	HYDROGRAPH AT	A43A1B	235.	12.08	25.	7.	7.	0.17		
+	2 COMBINED AT	CPHV9	382.	12.08	52.	16.	16.	0.30		
+	ROUTED TO	RRHV19	348.	12.33	52.	16.	16.	0.30	1091.34	12.33
+	2 COMBINED AT	CPHV10	1622.	12.50	276.	84.	81.	1.49		
+	ROUTED TO	RRHV20	1540.	12.58	276.	84.	81.	1.49	1076.16	12.58
+	HYDROGRAPH AT	ED47B	1159.	12.08	112.	31.	30.	0.81		
+	2 COMBINED AT	CPHV11	1601.	12.58	388.	115.	110.	2.30		
+	DIVERSION TO	DIR55B	472.	12.58	97.	27.	26.	2.30		
+	HYDROGRAPH AT	DFED47	1128.	12.58	291.	88.	85.	2.30		
+	ROUTED TO	RRHV21	1050.	12.83	290.	87.	83.	2.30	1060.55	12.83
+	ROUTED TO	RRHV22	977.	13.25	290.	93.	90.	2.30	1040.00	13.25

+	HYDROGRAPH AT	IR59B	435.	12.67	87.	22.	21.	0.66	
+	2 COMBINED AT	CPHV12	1182.	13.17	376.	115.	111.	2.96	
+	DIVERSION TO	RCHV12	1182.	0.08	376.	115.	111.	2.96	
+	HYDROGRAPH AT	DIHV12	0.	0.08	0.	0.	0.	2.96	
+	HYDROGRAPH AT	REED47	472.	12.58	97.	27.	26.	0.00	
+	ROUTED TO	RRHV23	363.	13.75	93.	26.	25.	0.00	1061.34 13.75
+									
+	HYDROGRAPH AT	IR55B	415.	12.50	73.	19.	18.	0.53	
+	2 COMBINED AT	CIR55B	429.	13.67	163.	45.	44.	0.53	
+	DIVERSION TO	RCIREB	429.	0.08	163.	45.	44.	0.53	
+	HYDROGRAPH AT	DIR55B	0.	0.08	0.	0.	0.	0.53	

*** NORMAL END OF HEC-1 ***

LAVEEN AREA DRAINAGE MASTER STUDY

SOUTHWEST SOUTH MOUNTAIN WATERSHED EXISTING CONDITION HYDROLOGY MODEL

FILE NAME: SWSM.DAT

DECEMBER 7, 2000

```
1*****************************************
*                                       *
*   FLOOD HYDROGRAPH PACKAGE  (HEC-1)   *
*             MAY  1991                 *
*          VERSION 4.0.1E               *
*     Lahey F77L-EM/32 version 5.01     *
*       Dodson & Associates, Inc.       *
*  RUN DATE  11/15/00  TIME  12:43:08   *
*****************************************
```

```
*****************************************
*                                       *
*   U.S. ARMY CORPS OF ENGINEERS        *
*   HYDROLOGIC ENGINEERING CENTER       *
*        609 SECOND STREET              *
*      DAVIS, CALIFORNIA 95616          *
*          (916) 551-1748               *
*                                       *
*****************************************
```

```
X    X  XXXXXXX   XXXXX          X
X    X  X        X     X        XX
X    X  X              X       X
XXXXXXX  XXXX         X        X
X    X  X              X       X
X    X  X        X     X       X
X    X  XXXXXXX   XXXXX        XXX
```

THIS PROGRAM REPLACES ALL PREVIOUS VERSIONS OF HEC-1 KNOWN AS HEC1 (JAN 73), HEC1GS, HEC1DB, AND HEC1KW.

THE DEFINITIONS OF VARIABLES -RTIMP- AND -RTIOR- HAVE CHANGED FROM THOSE USED WITH THE 1973-STYLE INPUT STRUCTURE.
THE DEFINITION OF -AMSKK- ON RM-CARD WAS CHANGED WITH REVISIONS DATED 28 SEP 81. THIS IS THE FORTRAN77 VERSION
NEW OPTIONS: DAMBREAK OUTFLOW SUBMERGENCE , SINGLE EVENT DAMAGE CALCULATION, DSS:WRITE STAGE FREQUENCY,
DSS:READ TIME SERIES AT DESIRED CALCULATION INTERVAL LOSS RATE:GREEN AND AMPT INFILTRATION
KINEMATIC WAVE: NEW FINITE DIFFERENCE ALGORITHM

1 HEC-1 INPUT

```
LINE          ID.....1.....2.....3.....4.....5.....6.....7.....8.....9.....10
   1          ID      LAVEEN ADMS 100-YEAR 24-HOUR SCS TYPE II RAINFALL  CBA FILE#40916-02-30 3
   2          ID      SOUTHWEST SOUTH MOUNTAIN WATERSHED (FINAL HEC-1)   SEPTEMBER 30, 1991
   3          ID      HEC-1 FILE NAME IS SWSM.NEW24
   4          IT      5                   300
   5          IO      3       0
              *DIAGRAM
   6          KK   SWSM1-LAND USE- NATURAL DESERT(MOUNTAIN)
   7          KM   SUB-BASIN SWSM1
   8          KM   24-HOUR SCS TYPE II RAINFALL WAS USED TO FINED TC & R FOR THIS BASIN
   9          KM   THIS BASIN USED RAINFALL REDUCTION FACTOR OF .99
  10          BA   1.990
  11          IN     30
  12          KM   RAINFALL DEPTH OF 4.20 WAS SPACIALLY REDUCED AS SHOWN BY THE PB RECORD
  13          PB   4.158
  14          KM   THE FOLLOWING PC RECORD USED A 24-HR SCS TYPE STORM
  15          PC    .000    .005    .011    .016    .022    .028    .035    .041    .048    .056
  16          PC    .068    .071    .080    .089    .098    .109    .120    .133    .147    .163
  17          PC    .181    .204    .235    .283    .663    .735    .772    .799    .820    .838
  18          PC    .854    .868    .880    .891    .902    .912    .921    .929    .937    .945
  19          PC    .952    .959    .965    .972    .978    .984    .989    .995   1.000
  20          LG    .150    .345   3.550    .686  60.000
  21          UC    .483    .249
  22          UA       0       3       5       8      12      20      43      75      90      96
  23          UA     100

  24          KK   RSWSM1
  25          KM   ROUTE FLOW FROM SUB-BASIN SWSM1 TO COMPUTATION POINT SWSM4
  26          RS       2    ELEV    1168
  27          RC   0.040   0.050   0.040    8600    0.02    1174
  28          RX       0      30      40      50      80     100     110     210
  29          RY    1174    1172    1170    1168    1168    1170    1172    1174

  30          KK   SWSM4
  31          KM   SUB-BASIN SWSM4-LAND USE- NATURAL DESERT(HILLSLOPE)
  32          KM   24-HOUR SCS TYPE II RAINFALL WAS USED TO FINED TC & R FOR THIS BASIN
  33          KM   THIS BASIN USED RAINFALL REDUCTION FACTOR OF .99
  34          BA   .340
  35          LG    .150    .350   3.750    .293    .000
  36          UC    .583    .556
  37          UA       0       3       5       8      12      20      43      75      90      96
  38          UA     100

  39          KK   CSWSM1
  40          KM   COMBINE ROUTED FLOW FROM SUB-BASIN SWSM1 AND SWSM4
  41          HC       2

  42          KK   DSWSM4
  43          KM   RUNOFF FROM COMPUTATION POINT CSWSM1 DRAINS OUTSIDE OF THE STUDY AREA
  44          KM   HYDROGRAPH IS DIVERTED
  45          DT   DIV.4
  46          DI       0     100     500    1000    2000    2500    3000    3500
  47          DQ       0     100     500    1000    2000    2500    3000    3500
```


1 HEC-1 INPUT

```
LINE          ID.....1.....2.....3.....4.....5.....6.....7.....8.....9.....10
  48          KK   SWSM2
  49          KM   SUB-BASIN SWSM2-LAND USE- NATURAL DESERT(HILLSLOPE,MOUNTAIN)
  50          KM   24-HOUR SCS TYPE II RAINFALL WAS USED TO FINED TC & R FOR THIS BASIN
  51          KM   THIS BASIN USED RAINFALL REDUCTION FACTOR OF 1.00
  52          BA   .440
  53          IN     30
  54          KM   RAINFALL DEPTH OF 4.20 WAS SPACIALLY REDUCED AS SHOWN BY THE PB RECORD
  55          PB   4.20
  56          KM   THE FOLLOWING PC RECORD USED A 24-HR SCS TYPE STORM
  57          PC    .000    .005    .011    .016    .022    .028    .035    .041    .048    .056
  58          PC    .068    .071    .080    .089    .098    .109    .120    .133    .147    .163
  59          PC    .181    .204    .235    .283    .663    .735    .772    .799    .820    .838
  60          PC    .854    .868    .880    .891    .902    .912    .921    .929    .937    .945
  61          PC    .952    .959    .965    .972    .978    .984    .989    .995   1.000
  62          LG    .150    .263   3.100    .942  25.000
  63          UC    .417    .330
  64          UA       0       3       5       8      12      20      43      75      90      96
  65          UA     100

  66          KK   DSWSM2
  67          KM   RUNOFF FROM SUB-BASIN SWSM2 DRAINS OUTSIDE OF THE STUDY AREA.
  68          KM   HYDROGRAPH IS DIVERTED
  69          DT   DIV.2
  70          DI       0     100     200     500    1000    1500    2000    2500
  71          DQ       0     100     200     500    1000    1500    2000    2500

  72          KK   SWSM3
  73          KM   SUB-BASIN SWSM3-LAND USE- NATURAL DESERT(HILLSLOPE)
  74          KM   24-HOUR SCS TYPE II RAINFALL WAS USED TO FINED TC & R FOR THIS BASIN
  75          KM   THIS BASIN USED RAINFALL REDUCTION FACTOR OF1.00
  76          BA   .280
  77          IN     30
  78          KM   RAINFALL DEPTH OF 4.20 WAS SPACIALLY REDUCED AS SHOWN BY THE PB RECORD
  79          PB   4.200
  80          KM   THE FOLLOWING PC RECORD USED A 24-HR SCS TYPE STORM
  81          PC    .000    .005    .011    .016    .022    .028    .035    .041    .048    .056
  82          PC    .068    .071    .080    .089    .098    .109    .120    .133    .147    .163
  83          PC    .181    .204    .235    .283    .663    .735    .772    .799    .820    .838
  84          PC    .854    .868    .880    .891    .902    .912    .921    .929    .937    .945
  85          PC    .952    .959    .965    .972    .978    .984    .989    .995   1.000
  86          LG    .150    .300   3.750    .633    .000
  87          UC    .617    .534
  88          UA       0       3       5       8      12      20      43      75      90      96
  89          UA     100

  90          KK   DSWSM3
  91          KM   RUNOFF FROM SUB-BASIN SWSM3 DRAINS OUTSIDE OF THE STUDY AREA.
  92          KM   HYDROGRAPH IS DIVERTED
  93          DT   DIV.3
  94          DI       0      50     200     300     400     500     700    1000
  95          DQ       0      50     200     300     400     500     700    1000
```


1 HEC-1 INPUT

```
LINE          ID.....1.....2.....3.....4.....5.....6.....7.....8.....9.....10
  96          KK   SWSM5
  97          KM   SUB-BASIN SWSM5-LAND USE- NATURAL DESERT(HILLSLOPE)
  98          KM   24-HOUR SCS TYPE II RAINFALL WAS USED TO FINED TC & R FOR THIS BASIN
  99          KM   THIS BASIN USED RAINFALL REDUCTION FACTOR OF1.00
 100          BA   .090
 101          IN     30
 102          KM   RAINFALL DEPTH OF 4.20 WAS SPACIALLY REDUCED AS SHOWN BY THE PB RECORD
 103          PB   4.20
 104          KM   THE FOLLOWING PC RECORD USED A 24-HR SCS TYPE STORM
 105          PC    .000    .005    .011    .016    .022    .028    .035    .041    .048    .056
 106          PC    .068    .071    .080    .089    .098    .109    .120    .133    .147    .163
 107          PC    .181    .204    .235    .283    .663    .735    .772    .799    .820    .838
 108          PC    .854    .868    .880    .891    .902    .912    .921    .929    .937    .945
 109          PC    .952    .959    .965    .972    .978    .984    .989    .995   1.000
 110          LG    .150    .250   8.600    .066    .000
 111          UC    .433    .516
 112          UA       0       3       5       8      12      20      43      75      90      96
 113          UA     100

 114          KK   DSWSM5
 115          KM   RUNOFF FROM SUB-BASIN SWSM5 DRAINS OUTSIDE OF THE STUTY AREA.
 116          KM   HYDROGRAPH IS DIVERTED
 117          DT   DIV.5
 118          DI       0      10      50      70     100     150     200     300
 119          DQ       0      10      50      70     100     150     200     300

 120          KK   SWSM6
 121          KM   SUB-BASIN SWSM6-LAND USE- NATURAL DESERT(HILLSLOPE,MOUNTAINS)
 122          KM   24-HOUR SCS TYPE II RAINFALL WAS USED TO FINED TC & R FOR THIS BASIN
 123          KM   THIS BASIN USED RAINFALL REDUCTION FACTOR OF 1.00
 124          BA   .950
 125          IN     30
 126          KM   RAINFALL DEPTH OF 4.20 WAS SPACIALLY REDUCED AS SHOWN BY THE PB RECORD
 127          PB   4.20
 128          KM   THE FOLLOWING PC RECORD USED A 24-HR SCS TYPE STORM
 129          PC    .000    .005    .011    .016    .022    .028    .035    .041    .048    .056
 130          PC    .068    .071    .080    .089    .098    .109    .120    .133    .147    .163
 131          PC    .181    .204    .235    .283    .663    .735    .772    .799    .820    .838
```

```
132         PC    .854    .868    .880    .891    .902    .912    .921    .929    .937    .945
133         PC    .952    .959    .965    .972    .978    .984    .989    .995   1.000
134         LG    .150    .316   4.950    .564  40.000
135         UC    .467    .357
136         UA       0       3       5       8      12      20      43      75      90      96
137         UA     100

138         KK  DSWSM6
139         KM  RUNOFF FROM SUB-BASIN SWSM6 DRAINS OUTSIDE OF THE STUDY AREA.
140         KM  HYDROGRAPH IS DIVERTED
141         DT  DIV.6
142         DI       0     100     500    1000    1500    2000    2500    3000
143         DQ       0     100     500    1000    1500    2000    2500    3000
```

PAGE 4

1

HEC-1 INPUT

```
LINE        ID.......1.......2.......3.......4.......5.......6.......7.......8.......9......10

144         KK  SWSM7
145         KM  SUB-BASIN SWSM7-LAND USE- NATURAL DESERT(HILLSLOPE,MOUNTAIN)
146         KM  24-HOUR SCS TYPE II RAINFALL WAS USED TO FINED TC & R FOR THIS BASIN
147         KM  THIS BASIN USED RAINFALL REDUCTION FACTOR OF1.00
148         BA    .100
149         IN      30
150         KM  RAINFALL DEPTH OF 4.20 WAS SPACIALLY REDUCED AS SHOWN BY THE PB RECORD
151         PB  4.200
152         KM  THE FOLLOWING PC RECORD USED A 24-HR SCS TYPE STORM
153         PC    .000    .005    .011    .016    .022    .028    .035    .041    .048    .056
154         PC    .068    .071    .080    .089    .098    .109    .120    .133    .147    .163
155         PC    .181    .204    .235    .283    .663    .735    .772    .799    .820    .838
156         PC    .854    .868    .880    .891    .902    .912    .921    .929    .937    .945
157         PC    .952    .959    .965    .972    .978    .984    .989    .995   1.000
158         UC    .183    .141
159         UA       0       3       5       8      12      20      43      75      90      96
160         UA     100

161         KK  DSWSM7
162         KM  RUNOFF FROM SUB-BASIN SWSM7 DRAINS OUTSIDE OF STUDY AREA.
163         KM  HYDROGRAPH IS DIVERTED
164         DT  DIV.7
165         DI       0      50     100     200     500     700     800    1000
166         DQ       0      50     100     200     500     700     800    1000

167         KK  SWSM8
168         KM  SUB-BASIN SWSM8-LAND USE- NATURAL DESERT(MOUNTAIN)
169         KM  24-HOUR SCS TYPE II RAINFALL WAS USED TO FINED TC & R FOR THIS BASIN
170         KM  THIS BASIN USED RAINFALL REDUCTION FACTOR OF1.00
171         BA    .030
172         IN      30
173         KM  RAINFALL DEPTH OF 4.20 WAS SPACIALLY REDUCED AS SHOWN BY THE PB RECORD
174         PB  4.200
175         KM  THE FOLLOWING PC RECORD USED A 24-HR SCS TYPE STORM
176         PC    .000    .005    .011    .016    .022    .028    .035    .041    .048    .056
177         PC    .068    .071    .080    .089    .098    .109    .120    .133    .147    .163
178         PC    .181    .204    .235    .283    .663    .735    .772    .799    .820    .838
179         PC    .854    .868    .880    .891    .902    .912    .921    .929    .937    .945
180         PC    .952    .959    .965    .972    .978    .984    .989    .995   1.000
181         UC    .150    .175
182         UA       0       3       5       8      12      20      43      75      90      96
183         UA     100

184         KK  DSWSM8
185         KM  RUNOFF FROM SUB-BASIN SWSM8 DRAINS OUTSIDE OF THE STUDY AREA.
186         KM  HYDROGRAPH IS DIVERTED
187         DT  DIV.8
188         DI       0      10      30      50      70      90     150
189         DQ       0      10      30      50      70      90     150
190         ZZ
```

1

RUNOFF SUMMARY
FLOW IN CUBIC FEET PER SECOND
TIME IN HOURS, AREA IN SQUARE MILES

OPERATION	STATION	PEAK FLOW	TIME OF PEAK	AVERAGE FLOW FOR MAXIMUM PERIOD			BASIN AREA	MAXIMUM STAGE	TIME OF MAX STAGE
				6-HOUR	24-HOUR	72-HOUR			
HYDROGRAPH AT	SWSM1	2683.	12.25	454.	152.	147.	1.99		
ROUTED TO	RSWSM	2410.	12.42	454.	152.	146.	1.99	1172.25	12.42
HYDROGRAPH AT	SWSM4	289.	12.33	47.	12.	11.	0.34		
2 COMBINED AT	CSWSM	2694.	12.42	501.	163.	157.	2.33		
DIVERSION TO	DIV.4	2694.	0.08	501.	163.	157.	2.33		
HYDROGRAPH AT	DSWSM	0.	0.08	0.	0.	0.	2.33		
HYDROGRAPH AT	SWSM2	421.	12.25	65.	20.	19.	0.44		
DIVERSION TO	DIV.2	421.	0.08	65.	20.	19.	0.44		
HYDROGRAPH AT	DSWSM	0.	0.08	0.	0.	0.	0.44		
HYDROGRAPH AT	SWSM3	191.	12.42	30.	8.	7.	0.28		
DIVERSION TO	DIV.3	191.	0.08	30.	8.	7.	0.28		
HYDROGRAPH AT	DSWSM	0.	0.08	0.	0.	0.	0.28		
HYDROGRAPH AT	SWSM5	100.	12.25	18.	5.	4.	0.09		
DIVERSION TO	DIV.5	100.	0.08	18.	5.	4.	0.09		
HYDROGRAPH AT	DSWSM	0.	0.08	0.	0.	0.	0.09		
HYDROGRAPH AT	SWSM6	1044.	12.25	181.	58.	56.	0.95		
DIVERSION TO	DIV.6	1044.	0.08	181.	58.	56.	0.95		
HYDROGRAPH AT	DSWSM	0.	0.08	0.	0.	0.	0.95		
HYDROGRAPH AT	SWSM7	150.	12.08	19.	6.	6.	0.10		
DIVERSION TO	DIV.7	150.	0.08	19.	6.	6.	0.10		
HYDROGRAPH AT	DSWSM	0.	0.08	0.	0.	0.	0.10		
HYDROGRAPH AT	SWSM8	43.	12.00	6.	2.	2.	0.03		
DIVERSION TO	DIV.8	43.	0.08	6.	2.	2.	0.03		
HYDROGRAPH AT	DSWSM	0.	0.08	0.	0.	0.	0.03		

*** NORMAL END OF HEC-1 ***

APPENDIX B:Sub-basins for Laveen ADMP

HIDDEN VALLEY WATERSHED SEE SHEET 3

SOUTH Y

SEE SHEET 2

SWSM8

SWSM6

SWSM7

SWSM5

SWSM4

SWSM3

SWSM2

Ray Road

Sandy Ln

Ivanhoe St

Monterey

Wildman Wash

Choppo Rd

San Juan Rd

43rd Ave

FRWY ALIGNMENT

43cfs

150cfs

1044cfs

100cfs

2694cfs

191cfs

421cfs

NORTH

0 1200 2400 3600

1 INCH = 1200 FEET

DATE: 12/00	SCALE: 1"=1200'	NO. 1 OF 7

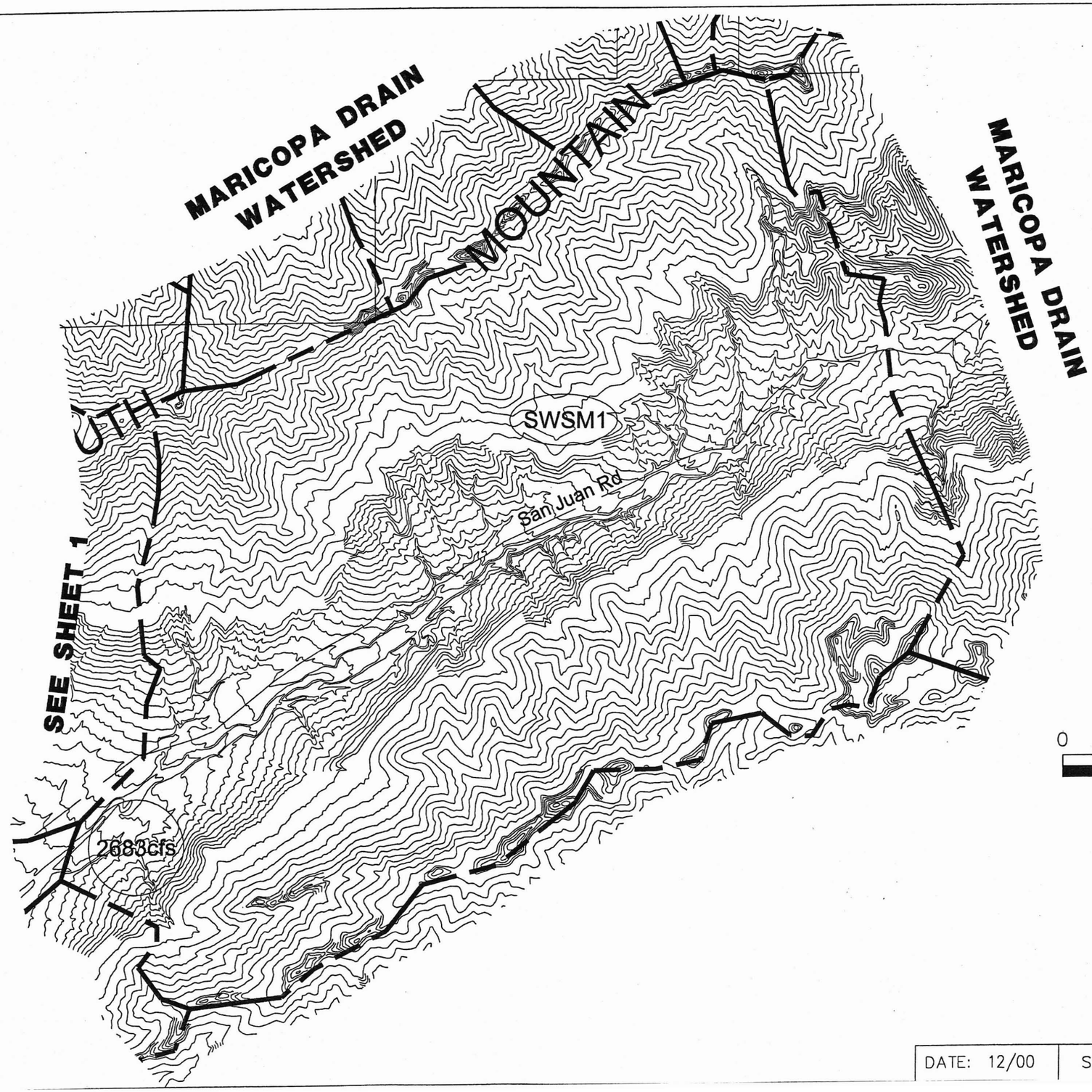

NORTH

0 1200 2400 3600

1 INCH = 1200 FEET

DATE: 12/00	SCALE: 1"=1200'	NO. 2 OF 7

NORTH

0 1200 2400 3600

1 INCH = 1200 FEET

WATERSHED SEE SHEET 4

CARVER HILLS

PM4B

PM5B

CPHV1

CPHV2

CPHV3

CPHV4

CPHV5

CPHV6

CPHV7

CPHV8

CPHV9

CPHV10

CPHV11

1351cfs

Western Canal

1450cfs

A43A2B

A43A1B

382cfs

1622cfs

WC19B

1

2

3

4

5

6

Carver Rd

1182cfs

Dead Horse Ditch

FRWY ALIGNMENT

IR59B

51st Ave

47th Ave

Price Ln

1601cfs

Estrella Rd

CIR55B

DIR55B

429cfs

GILA RIVER INDIAN RESERVATION

IR55B

ED47B

Western Canal

San Juan Rd

WC23B

NWSM1B

SOUTH

SOUTHWEST SOUTH MOUNTAIN WATERSHED SEE SHEET 1

SUB-BASIN TABLE

1	WC22B
2	WC21B
3	WC20B
4	WC18B
5	WC17B
6	WC16B

DATE: 12/00	SCALE: 1"=1200'	NO. 3 OF 7

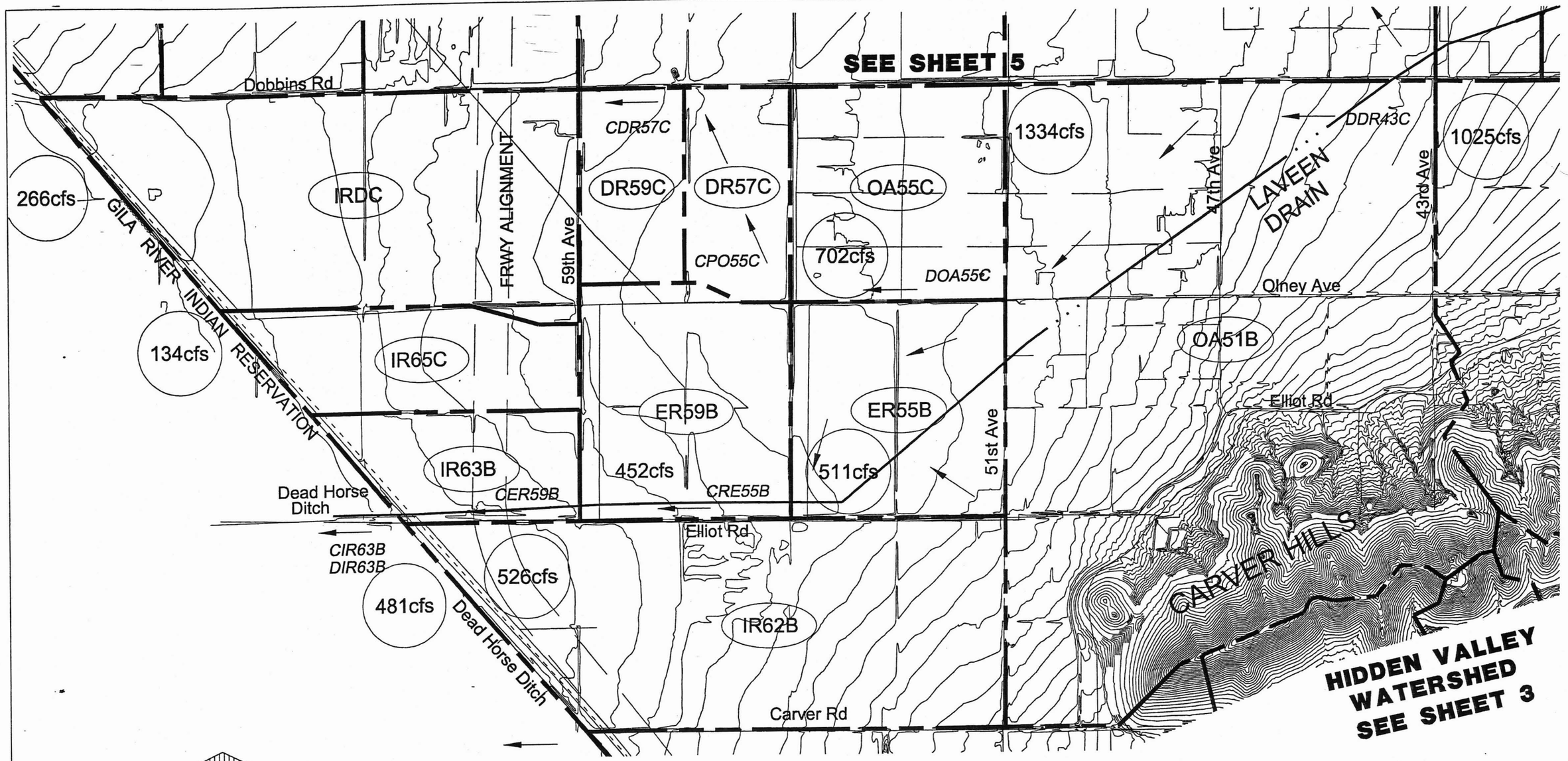

DATE: 12/00	SCALE: 1"=1200'	NO. 4 OF 7

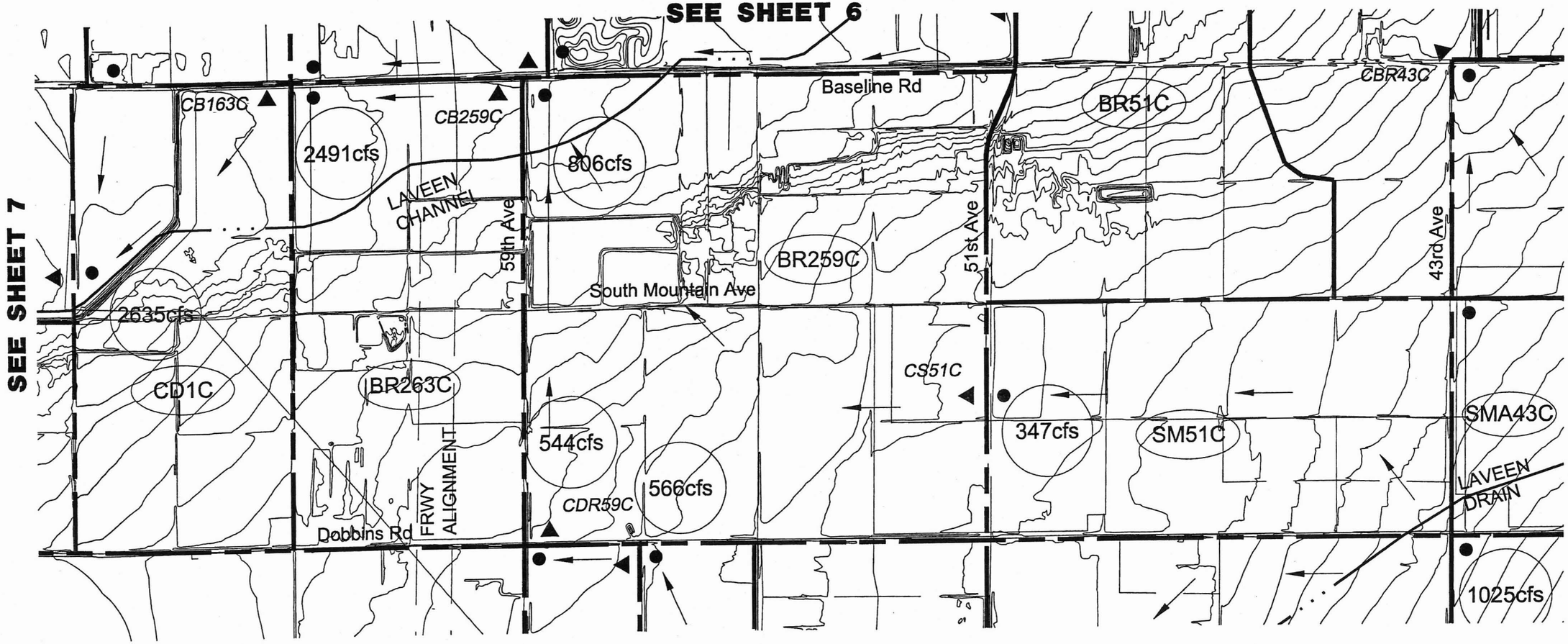

SEE SHEET 4

NORTH

0 1200 2400 3600

1 INCH = 1200 FEET

DATE: 12/00	SCALE: 1"=1200'	NO. 5 OF 7

NORTH

0 1200 2400 3600

1 INCH = 1200 FEET

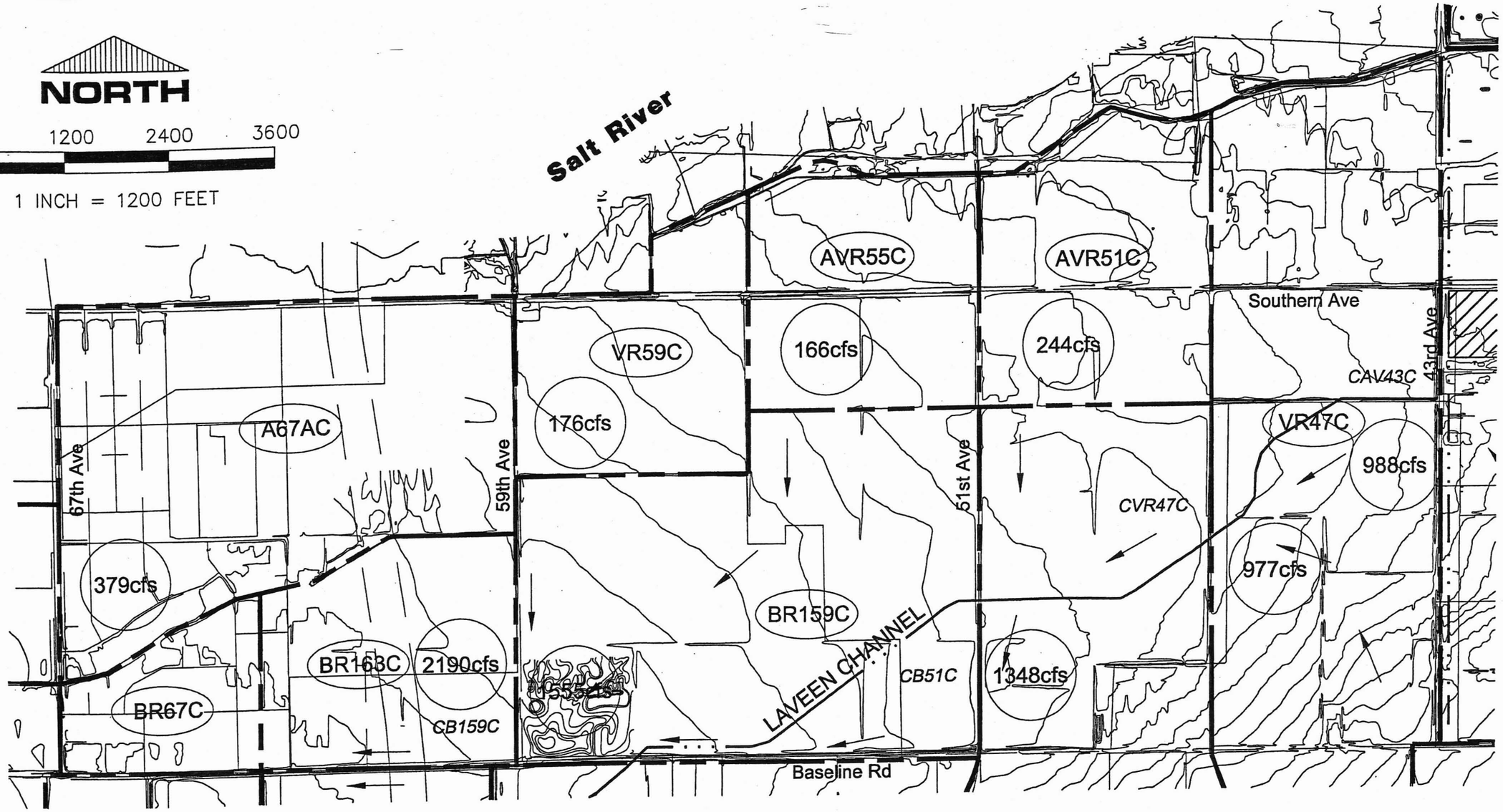

SEE SHEET 7

SEE SHEET 5

DATE: 12/00	SCALE: 1"=1200'	NO. 6 OF 7

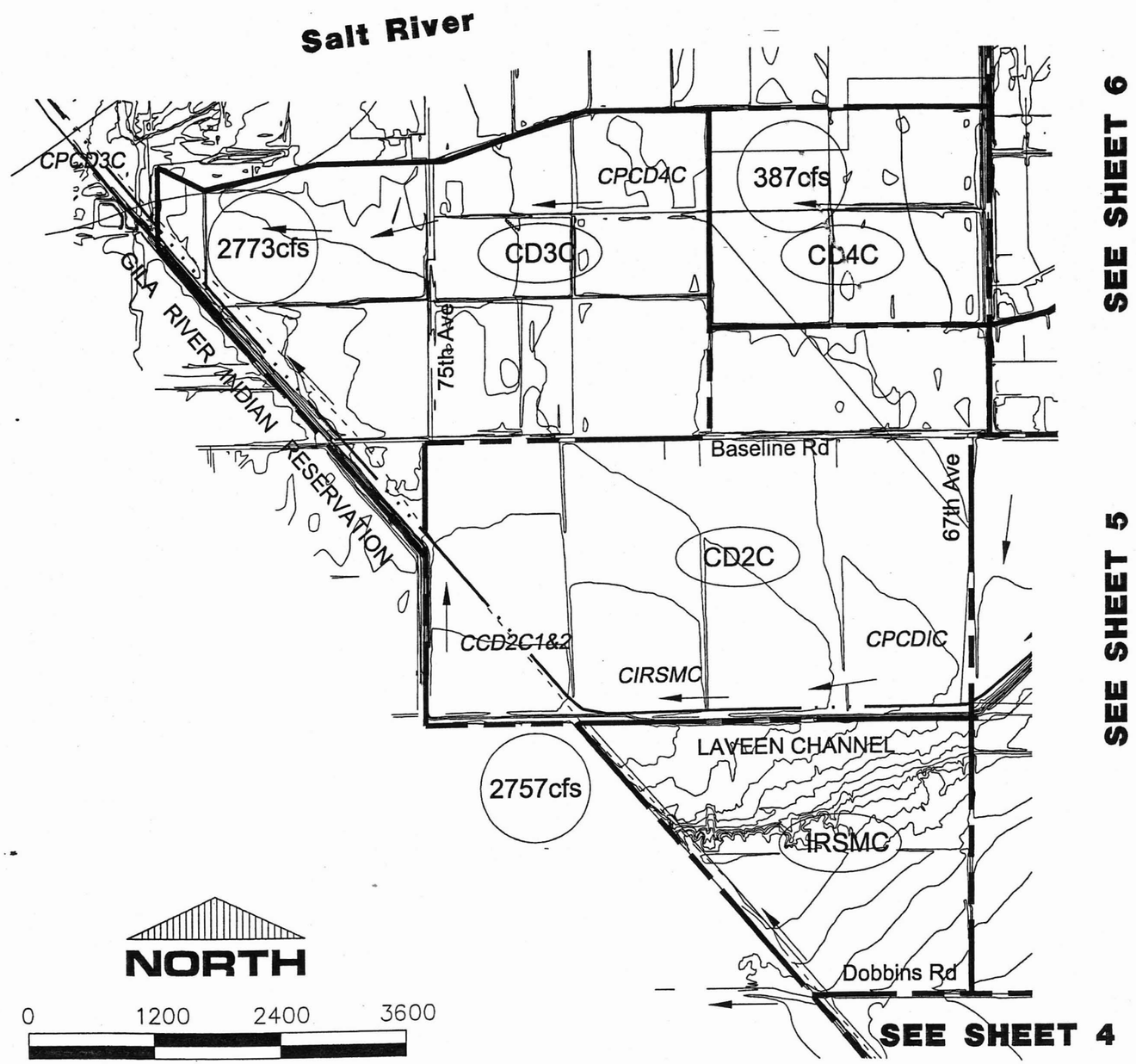

DATE: 12/00	SCALE: 1"=1200'	NO. 7 OF 7

APPENDIX C: MCDOT Records of Reported Flooding

Maricopa County Department of Transportation
Construction and Operations Division
Dispatch Section

Radio Call

CR#: 5883 ON ROAD: 67TH AVE

DIR DIR OF TRAVEL SOUTH BOUND

REF RD #1: VINEYARD REF RD #2:

CODE 580F Road Flooded (rain/storm water)

Call-In Date:	02/09/1998	Call-Out Date:	02/09/1998
Call-In Time:	12:39	Call-Out Time:	12:40
Call-In Unit:	3300	Call-Out Unit:	548

Comments ROAD FLOODED SIGNS REQUESTED

Operator: JULIE RUEGSEGGER

Date Completed:	02/09/1998	Time Completed:	13:28	Unit Completed:	548

ACTION TAKEN: nothing needed

Maricopa County Department of Transportation
Construction and Operations Division
Dispatch Section

Radio Call

CR#: 6334 ON ROAD: DOBBINS RD

DIR DIR OF TRAVEL EAST AND WEST BO

REF RD #1: 27TH AVE REF RD #2: 24TH DR

CODE 580F Road Flooded (rain/storm water)

Call-In Date:	03/29/1998	Call-Out Date:	
Call-In Time:	20:30	Call-Out Time:	
Call-In Unit:	547	Call-Out Unit:	

Comments

Operator: Julie Ruegsegger

Date Completed:	03/29/1998	Time Completed:	20:30	Unit Completed:	547

ACTION TAKEN: PLACED ROAD FLOODED SIGNS

Maricopa County Department of Transportation
Construction and Operations Division
Dispatch Section

Radio Call

CR#: 6337 ON ROAD: 35TH AVE

DIR DIR OF TRAVEL NORTH AND SOUTH

REF RD #1: CARVER RD REF RD #2:

CODE 580F Road Flooded (rain/storm water)

Call-In Date:	03/29/1998	Call-Out Date:	
Call-In Time:	17:45	Call-Out Time:	
Call-In Unit:	547	Call-Out Unit:	

Comments

Operator: Julie Ruegsegger

Date Completed:	03/29/1998	Time Completed:	17:45	Unit Completed:	547

ACTION TAKEN: PLACED ROAD FLOODED SIGNS

Maricopa County Department of Transportation
Construction and Operations Division
Dispatch Section

Radio Call

CR#: 6369 ON ROAD: 67TH AVE

DIR DIR OF TRAVEL NORTH AND SOUTH

REF RD #1: SALT RIVER REF RD #2:

CODE 580C Road Closure

Call-In Date:	04/01/1998	Call-Out Date:	
Call-In Time:	21:55	Call-Out Time:	
Call-In Unit:	549	Call-Out Unit:	

Comments

Operator: Julie Ruegsegger

Date Completed:	04/01/1998	Time Completed:	21:55	Unit Completed:	549

ACTION TAKEN: ROAD CLOSED DUE TO RIVER RUNNING

Maricopa County Department of Transportation
Construction and Operations Division
Dispatch Section

Radio Call

CR#: 6543 ON ROAD: 43RD AVE

DIR SOUTH DIR OF TRAVEL

REF RD #1: CARVER DR REF RD #2:

CODE 580F Road Flooded (rain/storm water)

Call-In Date:	04/27/1998	Call-Out Date:	
Call-In Time:	10:00	Call-Out Time:	
Call-In Unit:	5416	Call-Out Unit:	

Comments

Operator: Sandy Farbstein

Date Completed:	04/27/1998	Time Completed:	10:00	Unit Completed:	5416

ACTION TAKEN: REMOVED

Maricopa County Department of Transportation
Construction and Operations Division
Dispatch Section

Radio Call

CR#: 6785 ON ROAD: 67TH AVE

DIR DIR OF TRAVEL SOUTH BOUND

REF RD #1: SALT RIVER REF RD #2:

CODE 580M Sign Maintenance

Call-In Date:	06/18/1998	Call-Out Date:	06/19/1998
Call-In Time:	12:55	Call-Out Time:	9:09
Call-In Unit:	116	Call-Out Unit:	548

Comments DO NOT CROSS WHEN FLOODED SIGN IS SHOT UP

Operator: Julie Ruegsegger

Date Completed:	06/19/1998	Time Completed:	11:30	Unit Completed:	548

ACTION TAKEN: requested

Maricopa County Department of Transportation
Construction and Operations Division
Dispatch Section

Radio Call

CR#: 6445 ON ROAD: 67TH AVE

DIR DIR OF TRAVEL

REF RD #1: SALT RIVER REF RD #2:

CODE 580C Road Closure

Call-In Date:	04/12/1998	Call-Out Date:	
Call-In Time:	7:30	Call-Out Time:	
Call-In Unit:	540A	Call-Out Unit:	

Comments

Operator: Julie Ruegsegger

Date Completed:	04/12/1998	Time Completed:	7:30	Unit Completed:	540A

ACTION TAKEN: CLOSED ROAD DUE TO RIVER RUNNING

Maricopa County Department of Transportation
Construction and Operations Division
Dispatch Section

Radio Call

CR#: 6927 ON ROAD: 67TH AVE

DIR NORTH DIR OF TRAVEL NORTH AND SOUTH

REF RD #1: SOUTHERN AVE REF RD #2:

CODE 580M Sign Maintenance

Call-In Date:	07/13/1998	Call-Out Date:	07/13/1998
Call-In Time:	12:12	Call-Out Time:	12:19
Call-In Unit:	5400	Call-Out Unit:	548

Comments DO NOT CROSS WHEN FLOODED SIGN FOR N/BND IS MISSING AND THE ONE FOR S/BND HAS GRAFFITI

Operator: Julie Ruegsegger

Date Completed:	07/14/1998	Time Completed:	9:45	Unit Completed:	548

ACTION TAKEN: REPLACED. REQUESTED PRIOR TO RECEIVING CALL

Maricopa County Department of Transportation
Construction and Operations Division
Dispatch Section

Radio Call

CR#: 6965 ON ROAD: 43RD AVE

DIR NORTH DIR OF TRAVEL NORTH AND SOUTH

REF RD #1: ESTRELLA DR REF RD #2:

CODE 580F Road Flooded (rain/storm water)

Call-In Date:	07/20/1998	Call-Out Date:	
Call-In Time:	1:30	Call-Out Time:	
Call-In Unit:	549	Call-Out Unit:	

Comments

Operator: Julie Ruegsegger

Date Completed:	07/20/1998	Time Completed:	1:30	Unit Completed:	549

ACTION TAKEN: PLACED ROAD FLOODED SIGNS

Maricopa County Department of Transportation
Construction and Operations Division
Dispatch Section

Radio Call

CR#: 7657 ON ROAD: 35TH AVE

DIR SOUTH DIR OF TRAVEL

REF RD #1: SOUTHERN AVE REF RD #2:

CODE 580W Water on Road (not storm event related)

Call-In Date:	10/22/1998	Call-Out Date:	10/22/1998
Call-In Time:	7:37	Call-Out Time:	8:16
Call-In Unit:	365	Call-Out Unit:	544

Comments WATER ON THE ROAD

Operator: Julie Ruegsegger

Date Completed:	10/22/1998	Time Completed:	9:30	Unit Completed:	544

ACTION TAKEN: PLACED ROAD FLOODED SIGNS

Maricopa County Department of Transportation
Construction and Operations Division
Dispatch Section

Radio Call

CR#: 8805 ON ROAD: 43RD AVE

DIR NORTH DIR OF TRAVEL

REF RD #1: ESTRELLA DR REF RD #2:

CODE 580F Road Flooded (rain/storm water)

Call-In Date:	07/08/1999	Call-Out Date:	07/08/1999
Call-In Time:	9:23	Call-Out Time:	9:24
Call-In Unit:	264	Call-Out Unit:	543

Comments ROAD FLOODED SIGNS REQUESTED

Operator: Julie Ruegsegger

Date Completed:	07/08/1999	Time Completed:	11:10	Unit Completed:	543

ACTION TAKEN: PLACED ROAD FLOODED SIGNS

Maricopa County Department of Transportation
Construction and Operations Division
Dispatch Section

Radio Call

CR#: 8878 ON ROAD: ELLIOT RD

DIR EAST DIR OF TRAVEL

REF RD #1: 40TH AVE REF RD #2:

CODE 580F Road Flooded (rain/storm water)

Call-In Date:	07/09/1999	Call-Out Date:	
Call-In Time:	9:42	Call-Out Time:	
Call-In Unit:	543	Call-Out Unit:	

Comments

Operator: Julie Ruegsegger

Date Completed:	07/09/999	Time Completed:	9:42	Unit Completed:	543

ACTION TAKEN: PLACED ROAD FLOODED SIGNS

Maricopa County Department of Transportation
Construction and Operations Division
Dispatch Section

Radio Call

CR#: 9070 ON ROAD: DOBBINS RD

DIR EAST DIR OF TRAVEL

REF RD #1: 51ST AVE REF RD #2:

CODE 580W Water on Road (not storm event related)

Call-In Date:	07/23/1999	Call-Out Date:	07/23/1999
Call-In Time:	12:29	Call-Out Time:	12:36
Call-In Unit:	3301	Call-Out Unit:	531

Comments ROAD FLOODED DUE TO OVERFLOW OF CANAL

Operator: Julie Ruegsegger

Date Completed:	07/23/1999	Time Completed:	14:01	Unit Completed:	531

ACTION TAKEN: PLACED ROAD FLOODED SIGNS

Maricopa County Department of Transportation
Construction and Operations Division
Dispatch Section

Radio Call

CR#: 9134 ON ROAD: 43RD AVE

DIR DIR OF TRAVEL

REF RD #1: CARVER RD REF RD #2: ESTRELLA DR

CODE 580F Road Flooded (rain/storm water)

Call-In Date:	07/28/1999	Call-Out Date:	07/28/1999
Call-In Time:	10:52	Call-Out Time:	10:53
Call-In Unit:	MCSO	Call-Out Unit:	543

Comments ROAD CLOSED SIGN REQUESTED

Operator: Julie Ruegsegger

Date Completed:	07/28/1999	Time Completed:	12:15	Unit Completed:	543

ACTION TAKEN: PLACED ROAD FLOODED SIGNS

Maricopa County Department of Transportation
Construction and Operations Division
Dispatch Section

Radio Call

CR#: 9571 ON ROAD: 43RD AVE

DIR DIR OF TRAVEL

REF RD #1: ESTRELLA DR REF RD #2: CARVER RD

CODE 580F Road Flooded (rain/storm water)

Call-In Date:	09/20/1999	Call-Out Date:	09/20/1999
Call-In Time:	8:50	Call-Out Time:	9:48
Call-In Unit:	3601	Call-Out Unit:	543

Comments: DUE TO FLOODING

Operator: Maraila Olivarez

Date Completed:	09/20/1999	Time Completed:	10:30	Unit Completed:	543

ACTION TAKEN: PLACED BARRICADES

Maricopa County Department of Transportation
Construction and Operations Division
Dispatch Section

Radio Call

CR#: 10757 ON ROAD: 27TH AVE

DIR DIR OF TRAVEL NORTH AND SOUTH

REF RD #1: PHOTO VIEW RD REF RD #2: ESTRELLA AVE

CODE 580F Road Flooded (rain/storm water)

Call-In Date:	03/06/2000	Call-Out Date:	
Call-In Time:	10:25	Call-Out Time:	
Call-In Unit:	5415	Call-Out Unit:	

Comments:

Operator: Maraila Olivarez

Date Completed:	03/06/2000	Time Completed:	10:25	Unit Completed:	5415

ACTION TAKEN: PLACED BARRICADES

Maricopa County Department of Transportation
Construction and Operations Division
Dispatch Section

Radio Call

CR#: 9571 ON ROAD: 43RD AVE

DIR DIR OF TRAVEL

REF RD #1: ESTRELLA DR REF RD #2: CARVER RD

CODE 580F Road Flooded (rain/storm water)

Call-In Date:	09/20/1999	Call-Out Date:	09/20/1999
Call-In Time:	8:50	Call-Out Time:	9:48
Call-In Unit:	3601	Call-Out Unit:	543

Comments: DUE TO FLOODING

Operator: Maraila Olivarez

Date Completed:	09/20/1999	Time Completed:	10:30	Unit Completed:	543

ACTION TAKEN: PLACED BARRICADES

Maricopa County Department of Transportation
Construction and Operations Division
Dispatch Section

Radio Call

CR#: 10757 ON ROAD: 27TH AVE

DIR DIR OF TRAVEL NORTH AND SOUTH

REF RD #1: PHOTO VIEW RD REF RD #2: ESTRELLA AVE

CODE 580F Road Flooded (rain/storm water)

Call-In Date:	03/06/2000	Call-Out Date:	
Call-In Time:	10:25	Call-Out Time:	
Call-In Unit:	5415	Call-Out Unit:	

Comments:

Operator: Maraila Olivarez

Date Completed:	03/06/2000	Time Completed:	10:25	Unit Completed:	5415

ACTION TAKEN: PLACED BARRICADES

Maricopa County Department of Transportation
Construction and Operations Division
Dispatch Section

Radio Call

CR#: 10765 ON ROAD: 27TH AVE

DIR SOUTH DIR OF TRAVEL

REF RD #1: BROADWAY AVE REF RD #2:

CODE 580F Road Flooded (rain/storm water)

Call-In Date:	03/06/2000	Call-Out Date:	03/06/2000
Call-In Time:	11:08	Call-Out Time:	11:13
Call-In Unit:	3203	Call-Out Unit:	545

Comments: REQUESTING BARRICADES

Operator: Sandy Farbstein

Date Completed:	03/06/2000	Time Completed:	12:15	Unit Completed:	545

ACTION TAKEN: no action taken, not flooded

Maricopa County Department of Transportation
Construction and Operations Division
Dispatch Section

Radio Call

CR#: 10825 ON ROAD: CARVER DR

DIR DIR OF TRAVEL EAST AND WEST BO

REF RD #1: 43RD AVE REF RD #2:

CODE 580F Road Flooded (rain/storm water)

Call-In Date:	03/06/2000	Call-Out Date:	
Call-In Time:	10:36	Call-Out Time:	
Call-In Unit:	545	Call-Out Unit:	

Comments:

Operator: Cynthia Bodah

Date Completed:	03/06/2000	Time Completed:	10:35	Unit Completed:	545

ACTION TAKEN: PLACED BARRICADES

Maricopa County Department of Transportation
Construction and Operations Division
Dispatch Section

Radio Call

CR#: 10826 ON ROAD: ELLIOT RD

DIR DIR OF TRAVEL EAST BOUND

REF RD #1: 51ST AVE REF RD #2:

CODE 580F Road Flooded (rain/storm water)

Call-In Date:	03/06/2000	Call-Out Date:	
Call-In Time:	10:37	Call-Out Time:	
Call-In Unit:	545	Call-Out Unit:	

Comments

Operator: Cynthia Bodah

Date Completed:	03/06/2000	Time Completed:	10:37	Unit Completed:	545

ACTION TAKEN: PER 5404 ON 3/9/00 BARRICADES CHECKED AND REMAIN AS WATER STILL ON ROAD. PLACED BARRICADES

Maricopa County Department of Transportation
Construction and Operations Division
Dispatch Section

Radio Call

CR#: 10827 ON ROAD: 51ST AVE

DIR NORTH DIR OF TRAVEL NORTH AND SOUTH

REF RD #1: BASELINE AVE REF RD #2:

CODE 580F Road Flooded (rain/storm water)

Call-In Date:	03/06/2000	Call-Out Date:	
Call-In Time:	10:38	Call-Out Time:	
Call-In Unit:	545	Call-Out Unit:	

Comments

Operator: Cynthia Bodah

Date Completed:	03/06/2000	Time Completed:	10:38	Unit Completed:	545

ACTION TAKEN: PLACED BARRICADES

Maricopa County Department of Transportation
Construction and Operations Division
Dispatch Section

Radio Call

CR#: 12659 ON ROAD: 35TH AVE

DIR DIR OF TRAVEL

REF RD #1: CARVER DR REF RD #2:

CODE 580F Road Flooded (rain/storm water)

Call-In Date:	10/21/2000	Call-Out Date:	
Call-In Time:	18:00	Call-Out Time:	
Call-In Unit:	MCSO	Call-Out Unit:	

Comments

Operator: Cynthia Bodah

Date Completed:	10/21/2000	Time Completed:	19:10	Unit Completed:	545

ACTION TAKEN: PLACED BARRICADES

CITS

TICKETS BY ON ROAD

	Ticket #	Issue Description	Category	SubCategory	Status	Submitted Date	County Maintained
29th Ave							
	107	Luis Alverez' brother was approached by John Verduzco in a very rude and intimidating manner.	Complaint	Other	Closed	1/25/2000	Y
31st Ave							
	88	Road Condition Report	Information	Improvement Districts	Closed	1/20/2000	Y
	150	Excessive dust - especially if big trucks roll by quickly.	Complaint	Dust	Closed	2/9/2000	Y
45th Ave							
	256	Excessive dust - using the dirt from the property and you've lowered the elevation and road is flooding.	Complaint	Dust	Open	3/9/2000	Y
—	297	Rain Damage	Service	Grade Roadway	Closed	3/27/2000	Y
	563	wants road work done. paved roads all around this area. Can't get the road even graded	Complaint	Other	Closed	8/2/2000	Y
	656	He would like MCDOT to add some more dirt to his road because the grader have taken the road bed down to the point where he is w	Service	Grade Roadway	Open	9/19/2000	Y
47th Ave							
—	298	Storm damage	Service	Grade Roadway	Closed	3/27/2000	Y
—	364	Road not graded since rain. It is in very bad condition.	Service	Grade Roadway	Closed	4/19/2000	Y
Carver Rd							
	141	Road rough.	Service	Grade Roadway	Closed	2/7/2000	Y
Crivello Ave							
-	299	Storm Damage	Service	Grade Roadway	Closed	3/27/2000	Y
Elliot Rd							
	145	dusty - why didn't you pave the other portion	Complaint	Dust	Closed	2/7/2000	Y
	210	THIS ROADWAY IS VERY DUSTY. WOULD LIKE SOME INFORMATION ON GETTING THIS SECTION OF ROADWAY PAVED	Service	Miscellaneous	Closed	3/1/2000	Y
	342	Tires dumped in County R/W	Complaint	Other	Closed	4/12/2000	Y

MARICOPA COUNTY DEPARTMENT OF TRANSPORTATION
CITS

TICKETS BY ON ROAD

	Ticket #	Issue Description	Category	SubCategory	Status	Submitted Date	County Maintained
Elliot Rd							
	528	Road extremely rough...last done 1-6-2000	Service	Grade Roadway	Closed	7/12/2000	Y
	568	Man requesting width of Right of way easement	Information	Right of Way/Access/Easement	Closed	8/4/2000	Y
	598	Dirt portion of road very rough and unmaintained. Has crew forgotten them?	Service	Grade Roadway	Closed	8/18/2000	Y
	775	Water flowing across road in several locations - alot of debris and mud will have to be bladed off this road very soon.	Service	Remove Obstructions/Debris	Open	11/6/2000	Y
	787	Mud, water and debris in several locations across road.	Service	Remove Obstructions/Debris	Closed	11/7/2000	Y
	788	Several washes across road	Service	Remove Obstructions/Debris	Closed	11/7/2000	Y
Estrella Ave							
	690	road very rough not graded for some time	Complaint	Other	Closed	10/11/2000	N
Gumina Ave							
	300	Storm damage	Service	Grade Roadway	Closed	3/27/2000	Y
McNeil St							
	368	Very Washboardy	Service	Grade Roadway	Closed	4/21/2000	Y
Piedmont Rd							
	623	He wants to know if the above area will be maintained by County eventually. Roads are in bad condition.	Information	Road Work/CIP Project	Open	8/29/2000	Y
Sunrise Dr							
	551	Man in Real Estate with Keller-Williams	Service	Grade Roadway	Closed	7/26/2000	Y

CITS

TICKETS BY ON ROAD

	Ticket #	Issue Description	Category	SubCategory	Status	Submitted Date	County Maintained
27th Ave							
	66	Man wants road paved and upgraded.	Service	Grade Roadway	Closed	1/13/2000	N
	93	Grader Operator Performance, man running equipment knocked down to the ground this citizen's mailbox as well as neighbors.	Information	Other	Closed	1/21/2000	N
	131	wants dust palliative -not paving on 27th and 29th Avenues	Complaint	Dust	Closed	2/2/2000	N
	196	Rutted Road	Service	Grade Roadway	Closed	2/24/2000	N
	454	Trash on shoulder, encrouching on road. Starting a land fill on shoulder, tires also on N. and S. ends of 27th ave.	Information	Other	Closed	6/16/2000	N
	646	dump truck dropped a large load of material on the road.	Information	Other	Closed	9/13/2000	N
	730	Wash out due to recent rain.	Complaint	Drainage/Flooding	Closed	10/27/2000	N
	737	bad storm damage	Service	Grade Roadway	Closed	10/30/2000	N
	811	Did MCDOT purchase property on the southwest corner of 27th Ave. & New River Rd.	Other	Other	Open	11/17/2000	N
43rd Ave							
	758	Shoulder of road is eroded with pockets of water around mailboxes...afraid mail delivery will be stopped if repairs not made.	Service	Repair	Closed	11/1/2000	Y
51st Ave							
	200	Tumbleweeds blew across reservation and up against his fence and into right of way.Voluminous amount along east side of road.	Service	Remove Obstructions/Debris	Closed	2/25/2000	N
	415	bar ditch needs maintenance.	Complaint	Other	Closed	5/22/2000	N
	513	Large pothole where Komatke Market and 51st Ave. intersect at Pecos Rd.	Service	Repair	Closed	7/11/2000	N
	514	Large pothole	Service	Repair	Closed	7/11/2000	N
67th Ave							
	425	Compaction failure	Information	Other	Open	5/31/2000	Y
	709	Alot of debris and trash tossed off to side of road which is now an eyesore.	Service	Remove Obstructions/Debris	Closed	10/20/2000	Y
75th Ave							

MARICOPA COUNTY DEPARTMENT OF TRANSPORTATION
CITS

TICKETS BY ON ROAD

	Ticket #	Issue Description	Category	SubCategory	Status	Submitted Date	County Maintained
75th Ave							
	318	RERCORDING OF LEGAL DESCRIPTION.	Information	Other	Closed	4/4/2000	N
	605	LOOKING FOR ROW INFO	Information	Right of Way/Access/Easement	Closed	8/23/2000	N
83rd Ave							
	335	RIGHT OF WAY	Information	Other	Closed	4/10/2000	Y
	495	From El Paso Gas Pipeline to Maricopa Rd. Road is below grade and floods out after storms.	Service	Construct/Install	Closed	6/28/2000	Y
	519	Shoulders overgrown with vegetation.	Service	Grade Roadway	Closed	7/11/2000	Y
	615	Shoulders need scraping.	Service	Grade Roadway	Closed	8/25/2000	Y
	626	WE REPAVED 83RD AVE THE HUMP THAT KEEPED THE WATER FROM FLOODING HOUSE ON 83RD AVE WAS REMOVED DURNING THE REPAVING.	Information	Road Work/CIP Project	Closed	8/31/2000	Y
	740	Large pothole in northbound lane...3' across and very deep.	Service	Repair	Closed	10/31/2000	Y
Baseline Rd							
	90	N/S Pipeline runs under Baseline Rd. MCDOT pu int grate. Grader filled with dirt and closed down water line to SRP customers.	Service	Remove Obstructions/Debris	Closed	1/20/2000	Y
	91	Irrgation pie is plugged due to grader maintenance	Complaint	Drainage/Flooding	Closed	1/20/2000	Y
	175	What is exact amount of footage our Right of Way Dept is in process of condemning for this widening project.	Information	Right of Way/Access/Easement	Closed	2/14/2000	Y
	391	Woman wants access road while some major structural changes are made to the road.	Information	Road Work/CIP Project	Closed	5/12/2000	Y
	516	Shoulders of road overgrown with vegetation.	Service	Grade Roadway	Closed	7/11/2000	Y
	542	Concerned about renovation on Baseline Rd; high speeds; potential danger to children playing	Information	Road Work/CIP Project	Open	7/25/2000	Y
	614	Shoulder of road need scraping.	Service	Grade Roadway	Closed	8/25/2000	Y
Broadway Rd							
	329	County forces were surface treating in area but failed to put her mailbox back up. All the neighbors had theirs returned.	Service	Construct/Install	Closed	4/7/2000	Y

2/7/2000

MARICOPA COUNTY DEPARTMENT OF TRANSPORTATION
CITS

TICKETS BY ON ROAD

Ticket #	Issue Description	Category	SubCategory	Status	Submitted Date	County Maintained
Broadway Rd						
377	NEEDS COPY OF LEGAL DESCRIPTIONS OF ROADWAY	Information	Right of Way/Access/Easement	Closed	5/1/2000	Y
700	Wants information on impact study	Information	Other	Open	10/17/2000	Y
Dobbins Rd						
460	LO0KING FOR ACCESS ON 23RD AVE SOUTH OF DOBBINS	Information	Right of Way/Access/Easement	Closed	6/19/2000	N
517	Excessive vegetation on shoulders of road.	Service	Grade Roadway	Closed	7/11/2000	N
524	Large hole in road...afraid of erosion.	Service	Repair	Closed	7/12/2000	N
820	STORM DAMAGE HAS SHOULDERS IN ROUGH CONDITION LADY UNABLE TO GET INTO DRIVEWAY	Complaint	Damaged Personal Property	Closed	11/27/2000	N
Southern Ave						
273	Construction in area, pulled down barricades set by superintendent and drove through his area. Dust extremely thick. Wife sick.	Complaint	Dust	Closed	3/17/2000	Y
561	Grafetti on bridge.	Service	Remove Obstructions/Debris	Closed	8/1/2000	Y
629	2 couches tossed on road	Complaint	Other	Closed	9/1/2000	Y
688	large pieces of concrete to be removed	Information	Other	Closed	10/4/2000	Y

APPENDIX D: Detailed Description of Listed Threatened and Endangered Species and Species of Concern for the Laveen ADMP Focus Area

Threatened and Endangered Species

Arizona agave

The Arizona agave is found in the transition zone between oak-juniper woodland and mountain mahogany-oak scrub at 3,000 to 6,000 feet above sea level. Steep rocky slopes characterize its known habitats however, it can occur on drainage bottoms or on relatively gentle slopes or saddles (USFWS 1998). The plant is believed to have originated through a hybridization between two other agave species, *A. chrysantha* and *A. toumeyana* var. *bella*. The nearest known populations of this plant occur in the New River Mountains.

The site is below the known elevation range at which Arizona agaves typically occur. Additionally, no oak-juniper woodland or mahogany-oak scrub vegetation associations occur within or near the study area. Habitat in the study area is considered unsuitable for the Arizona agave.

Arizona cliffrose

Arizona cliffrose is restricted to Tertiary limestone lakebed deposits and occurs in small populations within relatively few locations in southeastern, central, and north-central Arizona (USFWS 1998). The only known population of Arizona cliffrose in Maricopa County is located in the Horseshoe Lake area.

The sandy/gravelly soils in the study area are derived primarily from Quaternary Stream deposits and Tertiary sediments (Chronic 1983). No limestone deposits were found in or near the study area. Habitat in the study area is considered unsuitable for the Arizona cliffrose.

Arizona hedgehog cactus

The Arizona hedgehog cactus is found on open slopes in narrow cracks between boulders and in the understory of shrubs in the zone between Madrean Evergreen Woodlands and Interior Chaparral at an elevation between 3,700 to 5,200 feet above sea level (USFWS 1998).

The elevation of the study area is below the known elevation for this species. No Madrean Evergreen Woodlands or Interior Chaparral vegetation types occur. Habitat in the study area is considered unsuitable for the Arizona hedgehog cactus.

Lesser long-nosed bat

The lesser long-nosed bat is a migratory species that occurs as a summer resident in desertscrub habitats in southeastern and central Arizona. Pregnant females of this species generally arrive in late April and early May and form maternity roosts in abandoned mine adits and natural caves. In late summer, lesser long-nosed bats migrate to higher elevations and feed primarily on the nectar and pollen of agaves and roost locally in caves. There are currently only three known maternity roosts in the State, all of which occur in southern Arizona (Petryszyn 1998). There are relatively few records for this species in Maricopa County; prior to 1986, records were limited to one from Phoenix and one from Glendale (Hoffmeister 1986).

Potential roost sites such as mine adits and natural caves were not found within the study area. The USGS Laveen, Fowler and Lone Butte 7.5' quadrangles were also examined for suitable features. Agaves do not occur within the natural desertscub areas, but are used as landscape material within the study area. The study area is outside the known geographic range for this species and there are few potential foraging resources or nesting areas for this species within or near the study area. Habitat in the study area is considered unsuitable for the lesser long-nosed bat.

Sonoran pronghorn

The Sonoran pronghorn occurs only as a small remnant population in arid flatlands of southwestern Arizona and adjacent Sonora, Mexico, although historically this subspecies ranged more widely than at present (AGFD 1996). Presently in Arizona, pronghorn are found on the Cabeza Prieta National Wildlife Refuge, Organ Pipe National Monument, the Barry M. Goldwater Range, and some adjacent public and state lands south of Interstate 8 (Bureau of Land Management and AGFD 2000). Its habitat consists of wide alluvial basins with desert grasslands in the Sonoran Desert climatic zone (USFWS 1998).

The project site falls outside of the known geographic range of this subspecies in southwestern Arizona. Habitat in the study area is considered unsuitable for the Sonoran pronghorn.

Desert pupfish

The desert pupfish occurred historically throughout the lower Gila River Basin. It occurs in shallow springs, small streams, and marshes, and portions of larger rivers (Minckley 1973). The geographical range of the desert pupfish includes the Gila River basin, the Salton Sea, and the Colorado River and its drainages (Ogden Environmental and Energy Services Co., Inc., 1999). The desert pupfish has been extripated in Arizona, but has been reintroduced into several locations in southern Arizona. Critical habitat was designated for this species March 31, 1986 (Federal Register 1986), including Quitobaquito Spring, Pima County; portions of San Felipe Creek, Carrizo Wash, and Fish Creek Wash, Imperial County, California (USFWS 2000).

The study area is outside the known geographical range of the species and does not support suitable habitat for the desert pupfish.

Gila topminnow

Historically, the Gila topminnow was one of the most common fish in the Gila River drainage in Arizona, with populations also occurring in Mexico and New Mexico. They used to occur in substantial numbers in the Gila River prior to the drying of the river that followed the completion of the Coolidge Dam (Rinne and Fletcher 1994). A fairly extensive reintroduction of this species into its historic range occurred in the 1970s, with some success (AGFD 1996). Presently, it is confined to the Monkey Spring system, Santa Cruz County, a series of small springs on the San Carlos Indian Reservation, Graham County, a number of restocked locations and three other natural localities in Arizona (Jenks 1991).

The study area does not support suitable habitat for the Gila topminnow.

Razorback sucker

Razorback suckers were historically abundant in all of Arizona's larger streams and rivers. However, at this time they are endemic only to the Colorado River basin, that includes the Colorado, Gila, Salt, and Verde River drainage's of Arizona (Henderickson 1993). Their numbers are declining and now the species is considered rare except in Lake Mohave. There are also isolated populations in Lake Mead and the lower Colorado River, below Lake Havasu (USFWS 1998).

The study area does not support suitable habitat for the razorback sucke.

Bald Eagle

In Arizona, Bald Eagles nest primarily along the Gila, Salt, Verde, and Bill Williams Rivers (USFWS 1998). Representative vegetation within known breeding areas in Arizona includes sycamore, blue paloverde, cholla, cottonwood, willow, mesquite, saguaro, juniper, and salt cedar. They typically nest on cliff ledges, rock pinnacles, and in cottonwood tress in close proximity to water (USFWS 1998).

There are no suitable nesting sites within or near the study area. Bald eagles may occasionally fly over the study area in winter during migration, however their occurrence in the study area would be rare due to a lack of nesting, and foraging sites.

Cactus Ferruginous Pygmy-owl

The range of the Cactus Ferruginous Pygmy-owl (Pygmy-owl) extends from south-central Arizona south through western Mexico and from southern Texas south through northeastern Mexico (USFWS 1995b). Habitat for the cactus ferruginous pygmy-owl in Arizona includes Sonoran riparian deciduous woodlands and Sonoran desertscrub. Currently, this species is known only from southern Arizona, primarily Pima County and southern Pinal County. There are no recent records of this species in Maricopa County. Historic records from around the turn of the century exist for New River, Cave Creek, Phoenix, Salt River, and Aqua Caliente in western Maricopa County (Johnson et al. 1998). With the exception of a collection at the confluence of the Salt and Verde Rivers in 1951, there are no historic or confirmed recent records of the cactus ferruginous pygmy-owl in the project vicinity.

The study area falls outside of the area proposed as critical habitat by the USFWS on December 30, 1998 (Federal Register 1998). The potential occurrence of the species appears unlikely based on the lack of recent records of the species in Maricopa County and habitat conditions. Species-specific surveys may be required if the future proposed flood control structures will require removal of native Desertscrub habitat.

Mexican Spotted Owl

Suitable habitat for the Mexican spotted owl occurs in mixed conifer and pine-oak vegetation communities and woodland, shady wooded canyons and steep canyons. In forested areas they prefer a high canopy closure and tree density, and sloped terrain. Populations are scattered and occur in all but the arid southwestern portion of the state and most of the lowland riparian zones (USFWS 1998). Outside the breeding season, Mexican spotted owls may be found in canyons at lower elevations.

No suitable habitat exists within the study area for the Mexican spotted owl.

Southwestern Willow Flycatcher

The Southwestern Willow Flycatcher is a riparian-obligate species that nests in densely vegetated flood plain areas where salt cedar, cottonwood, willow, box elder, buttonbush, and arrow weed are present (USFWS 1998). Generally, this species is found in Sonoran life zones, although it has also been recorded from higher elevations in the White Mountains. Habitat factors important to Southwestern Willow Flycatcher include distribution and isolation of vegetation patches, hydrology, prey types and abundance, parasites, predators, interspecific competition, and environmental factors (NPS 1997). Southwestern Willow Flycatchers prefer large patches (usually 30 feet minimum diameter or greater) of habitat and avoid narrow strips of habitat even where it occurs continuously along a stream (Sogge et al. 1997). The study area falls outside the designated critical habitat for this species (Federal Register 1997).

No suitable riparian habitat occurs in the study area for the Southwestern Willow Flycatcher.

Yuma Clapper Rail

The Yuma Clapper Rail is a summer (mid-April until mid-September) resident in cattail and bulrush marshes in the central and southwestern portions of the State. Some individuals of this species do not migrate, but remain in Arizona. They probe sediments for small fish and invertebrates staying in shallow cattail areas, where they also construct their nests. The Yuma Clapper Rail has been reported from the Salt River near the Verde River confluence. Survey data between 1990 and 1994 estimate 400 to 800 pairs existing throughout its range (AGFD 1996).

There are no marshes or other aquatic or suitable riparian habitats occurring within or near the study area for the Yuma Clapper Rail.

Species of Concern

Fulvous Whistling-duck (*Dendrocygna bicolor*)

The Fulvous Whistling-duck is locally common in southern marshes, rice fields, lakes, and other wide-open habitats (Kaufman 2000). It breeds from southern California to southwestern Arizona, from central and eastern Texas and the gulf coast of Louisiana, south to Mexico, and locally in southern Florida. Preferred nest sites include contour levees in rice fields, in bulrushes, in knotgrass and dense beds of cattails, on hummocks in marshes, at the edge of ponds and swamps, or in rank tall grass or wet meadows (USGS 2000).

The Fulvous Whistling-duck may occur in the study area.

Sonoran desert tortoise (*Gopherus agassizii*)

The Sonoran desert tortoise is classified as a Wildlife of Special Concern in Arizona. Sonoran desert tortoise habitat occurs primarily in the hills and rocky mountainous terrain of the Arizona Upland and Sonoran Desertscrub communities. Desert tortoises typically forage on plants, plant litter, and arthropods and are usually seen walking across the desert floor or in their burrows. Desert tortoises are typically found along washes and rocky areas, typically building their burrows in rocky areas (Johnson et al. 1990).

Tortoises may occur within the study area where native vegetation is present. If a desert tortoise is found in the study area during development, it is recommended that the AGFD's Guidelines for Handling Sonoran Desert Tortoises Encountered on Development Projects is followed. The guidelines are attached as part of Appendix E to this report.

Western Burrowing Owl (*Athene cunicularia hypugaea*)

The Burrowing Owl tends to be an opportunistic feeder, eating both vertebrates and invertebrates. Large insects, such as beetles and grasshoppers, and small mammals, such as mice, rats, gophers, and ground squirrels, are the most frequent source of prey (Phillips et. al. 1964). Other prey items include reptiles, amphibians, scorpions, young cottontail rabbits, bats, birds and even prickly pear seeds (Karalus and Eckert 1974). Consumption of insects increases during the breeding season (Brown 1996). Burrowing Owls hunt in flight from perches, and on the ground. Although they are most active in late afternoon to full darkness, the Burrowing Owl can be observed at almost any time of the day (Karalus and Eckert 1974). The Burrowing Owl is a small ground-dwelling owl found in open, dry grasslands, agricultural and range lands, and desert habitats, between elevations of 200 below msl and 9,000 above msl. It occurs throughout most of western North America, from southern Canada to Baja California, and south into Central and South America. Found throughout Arizona, it is distributed locally in open areas, generally year-round (Glinski 1998). They are often observed in Maricopa County where agricultural fields are interspersed with sparse Desertscrub (Glinski 1998). Habitat requirements are specific as far as topography and vegetation are concerned. They require sparse vegetation over long vistas to detect predators and prey and the presence of existing burrows that can be used as homes. They utilize the burrows of a wide variety of species such as prairie dogs, tortoise, badgers, and other burrow-dwelling species (Glinski 1998). Burrowing Owl nest sites are often found close to fences, power poles, or raised mounds (Grant 1965). They are also able to dig themselves, but prefer to utilize already constructed burrows. The Burrowing Owl has adapted well to human disturbance and agriculture, establishing colonies in urban and suburban areas (Thomsen 1971). They have been known to nest in culvert, sidewalk drains.

Nesting season begins in late March to early April. Nests are lined with an assortment of dry material including horse or cow manure, weed stalks, and feather or bits of small mammal skins (Davie 1889). The Burrowing Owl is generally single-brooded, laying on average 7-9 eggs. Eggs are incubated for 28 to 30 days by the female. Once hatched, young are cared for in the nest by the male. At 14 days of age, young can be observed roosting at the entrance to the burrow, waiting for adults to return with food. Young fledge the nest at about 44 days, and begin chasing insects when 49-56 days old (Brown 1996).

Burrowing Owls occur within the study area and were observed along irrigation canals throughout the project area. Species-specific surveys and coordination with the Maricopa Flood Control District will be required prior to any construction activities to mitigate harm and/or harassment of Burrowing Owls within the project area.

Western Yellow-billed Cuckoo (*Coccyzus americanus occidentalis*)

The Western Yellow-billed Cuckoo is a neotropical migrant. They spend their winters in northern South America, Peru, Bolivia, and Argentina. One of the latest arriving migrants, they arrive in the western U.S. and northern Mexico in June and July. Western Yellow-billed Cuckoos are mostly carnivorous and feed on large insects, such as caterpillars, katydids, grasshoppers, and cicadas, and treefrogs. Cuckoos feed on caterpillars in Arizona (Phillips et. al. 1964). Cottonwoods are important foraging habitat, although cuckoos usually nest in willows (Laymon and Halterman 1985). Nest sites are primarily located in large dense patches of dense cottonwood-willow forest, or secondarily in mixed-broadleaf riparian forest, and usually near surface water.

No suitable habitat for the Western Yellow-billed Cuckoo occurs in the study area.

APPENDIX E: Copy of AGFD's <u>Guidelines for Handling Sonoran Desert Tortoises</u> <u>Encountered on Development Projects</u>

GUIDELINES FOR HANDLING SONORAN DESERT TORTOISES ENCOUNTERED ON DEVELOPMENT PROJECTS

Arizona Game and Fish Department
Revised January 17, 1996

The Arizona Game and Fish Department (Department) has developed the following guidelines to reduce potential impacts to desert tortoises, and to promote the continued existence of tortoises throughout the state. These guidelines apply to short-term and/or small-scale projects, depending on the number of affected tortoises and specific type of project.

Desert tortoises of the Sonoran population are those occurring south and east of the Colorado River. Tortoises encountered in the open should be moved out of harm's way to adjacent appropriate habitat. If an occupied burrow is determined to be in jeopardy of destruction, the tortoise should be relocated to the nearest appropriate alternate burrow or other appropriate shelter, as determined by a qualified biologist. Tortoises should be moved less than 48 hours in advance of the habitat disturbance so they do not return to the area in the interim. Tortoises should be moved quickly, kept in an upright position at all times and place in the shade. Separate disposable gloves should be worn for each tortoise handled to avoid potential transfer of disease between tortoises. Tortoises must not be moved if the ambient air temperature exceeds 105 degrees Fahrenheit unless an alternate burrow is available or the tortoise is in imminent danger.

A tortoise may be moved up to two miles, but no further than necessary from its original location. If a release site, or alternate burrow, is unavailable within this distance, and ambient air temperature exceeds 105 degrees Fahrenheit, the Department should be contacted to place the tortoise into a Department-regulated desert tortoise adoption program. Tortoises salvaged from projects which result in substantial permanent habitat loss (e.g. housing and highway projects), or those requiring removal during long-term (longer than one week) construction projects, will also be placed in desert tortoise adoption programs. *Managers of projects likely to affect desert tortoises should obtain a scientific collecting permit from the Department to facilitate temporary possession of tortoises.* Likewise, if large numbers of tortoises (>5) are expected to be displaced by a project, the project manager should contact the Department for guidance and/or assistance.

Please keep in mind the following points:

- These guidelines do not apply to the Mohave population of desert tortoises (north and west of the Colorado River). Mohave desert tortoises are specifically protected under the Endangered Species Act, as administered by the U.S. Fish and Wildlife Service.
- These guidelines are subject to revision at the discretion of the Department. We recommend that the Department be contacted during the planning stages of any project that may affect desert tortoises.
- Take, possession, or harassment of wild desert tortoises is prohibited by state law. Unless specifically authorized by the Department, or as noted above, project personnel should avoid disturbing any tortoise.

APPENDIX F: HEC Model Output for Existing and Future Conditions, Alternative 2A, Alternative 4, and Alternative 6

HEC File Listing and Explanation

- Lavalt2a — FCDMC future conditions hydrology model for the Maricopa Drain Watershed (Laveen Conveyance Channel Watershed) modified to include those features included in the Laveen ADMP Alternative 2a.

- Lavalt4a — FCDMC future conditions hydrology model for the Maricopa Drain Watershed (Laveen Conveyance Channel Watershed) modified to include those features included in the Laveen ADMP Alternative 4a.

- Lavalt6a — FCDMC future conditions hydrology model for the Maricopa Drain Watershed (Laveen Conveyance Channel Watershed) modified to include those features included in the Laveen ADMP Alternative 6a.

- Hvfut — FCDMC existing conditions hydrology model for the Hidden Valley Watershed (future model not available presumably because minimal future development expected in Hidden Valley) modified to include those features included in the various Laveen ADMP Alternatives. This model includes a basin near Carver Road and the unnamed wash flows that discharge onto the roadway.

- Hvfut1 — FCDMC existing conditions hydrology model for the Hidden Valley Watershed (future model not available presumably because minimal future development expected in Hidden Valley) modified to include those features included in the various Laveen ADMP Alternatives. This model includes a basin near Estrella Road and 47th Avenue. Flows from the unnamed wash at Carver Road are carried via a channel through the farmland to the basin location.

- Swsmbasn — FCDMC existing conditions hydrology model for the Southwest South Mountain Watershed, including portions of South Mountain Park, (future model not available presumably because minimal future development expected in the area) modified to include those features included in the various Laveen ADMP Alternatives. This model includes a basin at the bottom of the watershed that collects all flows. The storm water collected by the basin is pumped to the discharge point at Dead Horse Ditch.

Note: Various hydraulics modeling was done using Haestad Methods Flow Master program to verify and check some of the hydraulic conveyances. These models are included along with the HEC1 output files.

Swsmbasn

```
1*****************************************
 *                                       *
 *   FLOOD HYDROGRAPH PACKAGE  (HEC-1)   *
 *              JUN  1998                *
 *            VERSION 4.1                *
 *                                       *
 *  RUN DATE   27JUN01  TIME  10:57:07   *
 *                                       *
 *****************************************
```

```
*****************************************
*                                       *
*    U.S. ARMY CORPS OF ENGINEERS       *
*    HYDROLOGIC ENGINEERING CENTER      *
*         609 SECOND STREET             *
*       DAVIS, CALIFORNIA 95616         *
*         (916) 756-1104                *
*                                       *
*****************************************
```

```
X     X  XXXXXXX   XXXXX           X
X     X  X        X     X         XX
X     X  X        X               X
XXXXXXX  XXXX     X        XXXXX  X
X     X  X        X               X
X     X  X        X     X         X
X     X  XXXXXXX   XXXXX          XXX
```

THIS PROGRAM REPLACES ALL PREVIOUS VERSIONS OF HEC-1 KNOWN AS HEC1 (JAN 73), HEC1GS, HEC1DB, AND HEC1KW.

THE DEFINITIONS OF VARIABLES -RTIMP- AND -RTIOR- HAVE CHANGED FROM THOSE USED WITH THE 1973-STYLE INPUT STRUCTURE.
THE DEFINITION OF -AMSKK- ON RM-CARD WAS CHANGED WITH REVISIONS DATED 28 SEP 81. THIS IS THE FORTRAN77 VERSION
NEW OPTIONS: DAMBREAK OUTFLOW SUBMERGENCE , SINGLE EVENT DAMAGE CALCULATION, DSS:WRITE STAGE FREQUENCY,
DSS:READ TIME SERIES AT DESIRED CALCULATION INTERVAL LOSS RATE:GREEN AND AMPT INFILTRATION
KINEMATIC WAVE: NEW FINITE DIFFERENCE ALGORITHM

1 HEC-1 INPUT PAGE 1

```
LINE          ID.....1.....2.....3.....4.....5.....6.....7.....8.....9.....10
   1          ID       LAVEEN ADMS 100-YEAR 24-HOUR SCS TYPE II RAINFALL  CBA FILE#40916-02-30 3
   2          ID       SOUTHWEST SOUTH MOUNTAIN WATERSHED (FINAL HEC-1)   SEPTEMBER 30, 1991
   3          ID       HEC-1 FILE NAME IS SWSM.NEW24
   4          IT       5                   300
   5          IO       3       0
              *DIAGRAM
   6          KK   SWSM1-LAND USE- NATURAL DESERT(MOUNTAIN)
   7          KM   SUB-BASIN SWSM1
   8          KM   24-HOUR SCS TYPE II RAINFALL WAS USED TO FINED TC & R FOR THIS BASIN
   9          KM   THIS BASIN USED RAINFALL REDUCTION FACTOR OF .99
  10          BA   1.990
  11          IN     30
  12          KM   RAINFALL DEPTH OF 4.20 WAS SPACIALLY REDUCED AS SHOWN BY THE PB RECORD
  13          PB   4.158
  14          KM   THE FOLLOWING PC RECORD USED A 24-HR SCS TYPE STORM
  15          PC    .000    .005    .011    .016    .022    .028    .035    .041    .048    .056
  16          PC    .068    .071    .080    .089    .098    .109    .120    .133    .147    .163
  17          PC    .181    .204    .235    .283    .663    .735    .772    .799    .820    .838
  18          PC    .854    .868    .880    .891    .902    .912    .921    .929    .937    .945
  19          PC    .952    .959    .965    .972    .978    .984    .989    .995   1.000
  20          LG    .150    .345   3.550    .686  60.000
  21          UC    .483    .249
  22          UA      0       3       5       8      12      20      43      75      90      96
  23          UA    100
  24          KK   RSWSM1
  25          KM   ROUTE FLOW FROM SUB-BASIN SWSM1 TO COMPUTATION POINT SWSM4
  26          RS      2    ELEV    1168
  27          RC  0.040   0.050   0.040    8600    0.02    1174
  28          RX      0      30      40      50      80     100     110     210
  29          RY   1174    1172    1170    1168    1168    1170    1172    1174
  30          KK   SWSM4
  31          KM   SUB-BASIN SWSM4-LAND USE- NATURAL DESERT(HILLSLOPE)
  32          KM   24-HOUR SCS TYPE II RAINFALL WAS USED TO FINED TC & R FOR THIS BASIN
  33          KM   THIS BASIN USED RAINFALL REDUCTION FACTOR OF .99
  34          BA    .340
  35          LG    .150    .350   3.750    .293    .000
  36          UC    .583    .556
  37          UA      0       3       5       8      12      20      43      75      90      96
  38          UA    100
  39          KK   CSWSM1
  40          KM   COMBINE ROUTED FLOW FROM SUB-BASIN SWSM1 AND SWSM4
  41          HC      2
              *
  42          KK   SWSM2
  43          KM   SUB-BASIN SWSM2-LAND USE- NATURAL DESERT(HILLSLOPE,MOUNTAIN)
  44          KM   24-HOUR SCS TYPE II RAINFALL WAS USED TO FINED TC & R FOR THIS BASIN
  45          KM   THIS BASIN USED RAINFALL REDUCTION FACTOR OF 1.00
  46          BA    .440
  47          IN     30
  48          KM   RAINFALL DEPTH OF 4.20 WAS SPACIALLY REDUCED AS SHOWN BY THE PB RECORD
```

1 HEC-1 INPUT PAGE 2

```
LINE          ID.....1.....2.....3.....4.....5.....6.....7.....8.....9.....10
```



```
  49          PB   4.20
  50          KM   THE FOLLOWING PC RECORD USED A 24-HR SCS TYPE STORM
  51          PC    .000    .005    .011    .016    .022    .028    .035    .041    .048    .056
  52          PC    .068    .071    .080    .089    .098    .109    .120    .133    .147    .163
  53          PC    .181    .204    .235    .283    .663    .735    .772    .799    .820    .838
  54          PC    .854    .868    .880    .891    .902    .912    .921    .929    .937    .945
  55          PC    .952    .959    .965    .972    .978    .984    .989    .995   1.000
  56          LG    .150    .263   3.100    .942  25.000
  57          UC    .417    .330
  58          UA      0       3       5       8      12      20      43      75      90      96
  59          UA    100
              *
  60          KK   SWSM3
  61          KM   SUB-BASIN SWSM3-LAND USE- NATURAL DESERT(HILLSLOPE)
  62          KM   24-HOUR SCS TYPE II RAINFALL WAS USED TO FINED TC & R FOR THIS BASIN
  63          KM   THIS BASIN USED RAINFALL REDUCTION FACTOR OF1.00
  64          BA    .280
  65          IN     30
  66          KM   RAINFALL DEPTH OF 4.20 WAS SPACIALLY REDUCED AS SHOWN BY THE PB RECORD
  67          PB   4.200
  68          KM   THE FOLLOWING PC RECORD USED A 24-HR SCS TYPE STORM
  69          PC    .000    .005    .011    .016    .022    .028    .035    .041    .048    .056
  70          PC    .068    .071    .080    .089    .098    .109    .120    .133    .147    .163
  71          PC    .181    .204    .235    .283    .663    .735    .772    .799    .820    .838
  72          PC    .854    .868    .880    .891    .902    .912    .921    .929    .937    .945
  73          PC    .952    .959    .965    .972    .978    .984    .989    .995   1.000
  74          LG    .150    .300   3.750    .633    .000
  75          UC    .617    .534
  76          UA      0       3       5       8      12      20      43      75      90      96
  77          UA    100
              *
  78          KK   SWSM5
  79          KM   SUB-BASIN SWSM5-LAND USE- NATURAL DESERT(HILLSLOPE)
  80          KM   24-HOUR SCS TYPE II RAINFALL WAS USED TO FINED TC & R FOR THIS BASIN
  81          KM   THIS BASIN USED RAINFALL REDUCTION FACTOR OF1.00
  82          BA    .090
  83          IN     30
  84          KM   RAINFALL DEPTH OF 4.20 WAS SPACIALLY REDUCED AS SHOWN BY THE PB RECORD
  85          PB   4.20
  86          KM   THE FOLLOWING PC RECORD USED A 24-HR SCS TYPE STORM
  87          PC    .000    .005    .011    .016    .022    .028    .035    .041    .048    .056
  88          PC    .068    .071    .080    .089    .098    .109    .120    .133    .147    .163
  89          PC    .181    .204    .235    .283    .663    .735    .772    .799    .820    .838
  90          PC    .854    .868    .880    .891    .902    .912    .921    .929    .937    .945
  91          PC    .952    .959    .965    .972    .978    .984    .989    .995   1.000
  92          LG    .150    .250   8.600    .066    .000
  93          UC    .433    .516
  94          UA      0       3       5       8      12      20      43      75      90      96
  95          UA    100
              *
```

1 HEC-1 INPUT PAGE 3

```
LINE          ID.....1.....2.....3.....4.....5.....6.....7.....8.....9.....10
```

```
  96          KK   SWSM6
  97          KM   SUB-BASIN SWSM6-LAND USE- NATURAL DESERT(HILLSLOPE,MOUNTAINS)
  98          KM   24-HOUR SCS TYPE II RAINFALL WAS USED TO FINED TC & R FOR THIS BASIN
  99          KM   THIS BASIN USED RAINFALL REDUCTION FACTOR OF 1.00
 100          BA    .950
 101          IN     30
 102          KM   RAINFALL DEPTH OF 4.20 WAS SPACIALLY REDUCED AS SHOWN BY THE PB RECORD
 103          PB   4.20
 104          KM   THE FOLLOWING PC RECORD USED A 24-HR SCS TYPE STORM
 105          PC    .000    .005    .011    .016    .022    .028    .035    .041    .048    .056
 106          PC    .068    .071    .080    .089    .098    .109    .120    .133    .147    .163
 107          PC    .181    .204    .235    .283    .663    .735    .772    .799    .820    .838
 108          PC    .854    .868    .880    .891    .902    .912    .921    .929    .937    .945
 109          PC    .952    .959    .965    .972    .978    .984    .989    .995   1.000
 110          LG    .150    .316   4.950    .564  40.000
 111          UC    .467    .357
 112          UA      0       3       5       8      12      20      43      75      90      96
 113          UA    100
              *
 114          KK   SWSM7
 115          KM   SUB-BASIN SWSM7-LAND USE- NATURAL DESERT(HILLSLOPE,MOUNTAIN)
 116          KM   24-HOUR SCS TYPE II RAINFALL WAS USED TO FINED TC & R FOR THIS BASIN
 117          KM   THIS BASIN USED RAINFALL REDUCTION FACTOR OF1.00
 118          BA    .100
 119          IN     30
 120          KM   RAINFALL DEPTH OF 4.20 WAS SPACIALLY REDUCED AS SHOWN BY THE PB RECORD
 121          PB   4.200
 122          KM   THE FOLLOWING PC RECORD USED A 24-HR SCS TYPE STORM
 123          PC    .000    .005    .011    .016    .022    .028    .035    .041    .048    .056
 124          PC    .068    .071    .080    .089    .098    .109    .120    .133    .147    .163
 125          PC    .181    .204    .235    .283    .663    .735    .772    .799    .820    .838
 126          PC    .854    .868    .880    .891    .902    .912    .921    .929    .937    .945
 127          PC    .952    .959    .965    .972    .978    .984    .989    .995   1.000
 128          UC    .183    .141
 129          UA      0       3       5       8      12      20      43      75      90      96
 130          UA    100
              *
```

```
          131          KK   SWSM8
          132          KM   SUB-BASIN SWSM8-LAND USE- NATURAL DESERT(MOUNTAIN)
          133          KM   24-HOUR SCS TYPE II RAINFALL WAS USED TO FINED TC & R FOR THIS BASIN
          134          KM   THIS BASIN USED RAINFALL REDUCTION FACTOR OF1.00
          135          BA    .030
          136          IN     30
          137          KM   RAINFALL DEPTH OF 4.20 WAS SPACIALLY REDUCED AS SHOWN BY THE PB RECORD
          138          PB   4.200
          139          KM   THE FOLLOWING PC RECORD USED A 24-HR SCS TYPE STORM
          140          PC    .000    .005    .011    .016    .022    .028    .035    .041    .048    .056
          141          PC    .068    .071    .080    .089    .098    .109    .120    .133    .147    .163
          142          PC    .181    .204    .235    .283    .663    .735    .772    .799    .820    .838
          143          PC    .854    .868    .880    .891    .902    .912    .921    .929    .937    .945
          144          PC    .952    .959    .965    .972    .978    .984    .989    .995   1.000
          145          UC    .150    .175
1                                        HEC-1 INPUT                                          PAGE  4

        LINE           ID.......1.......2.......3.......4.......5.......6.......7.......8.......9......10

          146          UA       0       3       5       8      12      20      43      75      90      96
          147          UA     100
                       *
                       *
                       *
                       *
                       *
                       *
                       *  *************COLLECT ALL FLOWS AND DETAIN IN BASIN WITH PUMP STATION********
                       *
                       *
                       *
                       *
                       *
                       *
                       *
          148          KK  CMBALL
          149          KM   COMBINE ALL OF THE FLOW IN THE SWSM WATERSHED AND USE BASIN AND PUMP SYSTEM
          150          HC       7
                       *
          151          KK   BASIN
          152          KM   *********************SOUTWEST SOUTH MOUNTAIN BASIN**************************
          153          KM   A BASIN AT RESERVATION BOUNDAY WILL COLLECT ALL FLOWS AND A PUMP STATION WILL
          154          KM   PUMP ALL FLOWS TO THE DEAD HOARSE DITCH WITH A MAXIMUM OUTFLOW OF 24 CFS
          155          KM   THE BASIN WILL BE 40 ACRES ON TOP AND 33 ACRES ON THE BOTTOM AND 12 FEET
          156          KM   DEEP
          157          RS       1    ELEV      -1
          158          SA      33    33.9    34.8    35.6    36.5    37.4    38.3    39.1      40
          159          SQ      50      50      50      50      50      50      50      50      50
          160          SE       0       2       4       6       8      10      12      14      16
                       *
          161          KK    PUMP
          162          KM   THIS WILL SIMULATE A PUMP PUMPING AT A RATE OF 24 CFS TO DEAD HORSE DITCH
          163          KO       1
          164          RK    6600   0.001   0.013           CIRC       2
                       *
          165          ZZ
```


1

SCHEMATIC DIAGRAM OF STREAM NETWORK

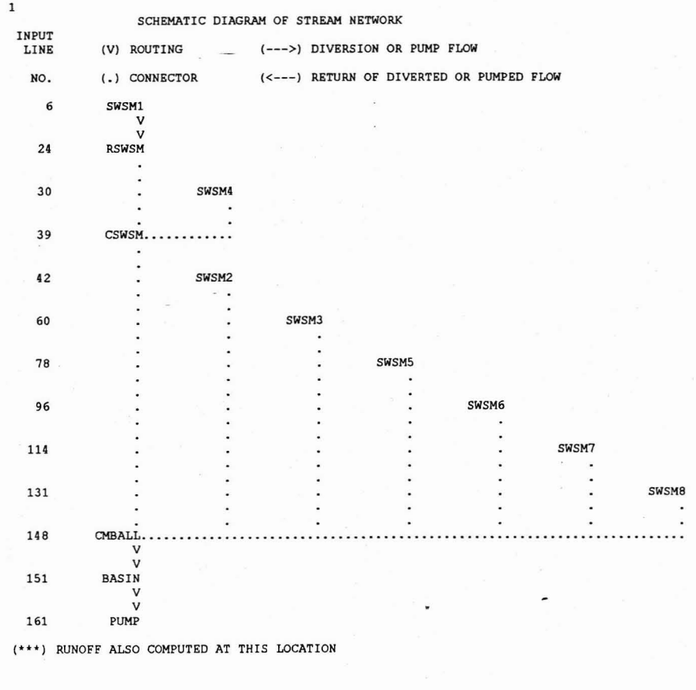

(***) RUNOFF ALSO COMPUTED AT THIS LOCATION

```
1****************************************                    ****************************************
*                                       *                    *                                      *
*   FLOOD HYDROGRAPH PACKAGE  (HEC-1)   *                    *   U.S. ARMY CORPS OF ENGINEERS       *
*              JUN  1998                *                    *   HYDROLOGIC ENGINEERING CENTER      *
*             VERSION 4.1               *                    *         609 SECOND STREET            *
*                                       *                    *       DAVIS, CALIFORNIA 95616        *
*  RUN DATE   27JUN01  TIME  10:57:07   *                    *          (916) 756-1104              *
*                                       *                    *                                      *
*****************************************                    ****************************************


                LAVEEN ADMS 100-YEAR 24-HOUR SCS TYPE II RAINFALL  CBA FILE#40916-02-30 3
                SOUTHWEST SOUTH MOUNTAIN WATERSHED (FINAL HEC-1)   SEPTEMBER 30, 1991
                HEC-1 FILE NAME IS SWSM.NEW24

  5 IO        OUTPUT CONTROL VARIABLES
                IPRNT           3  PRINT CONTROL
                IPLOT           0  PLOT CONTROL
                QSCAL          0.  HYDROGRAPH PLOT SCALE

    IT        HYDROGRAPH TIME DATA
                NMIN            5  MINUTES IN COMPUTATION INTERVAL
               IDATE      1     0  STARTING DATE
               ITIME         0000  STARTING TIME
                  NQ          300  NUMBER OF HYDROGRAPH ORDINATES
              NDDATE      2     0  ENDING DATE
              NDTIME         0055  ENDING TIME
               ICENT           19  CENTURY MARK

          COMPUTATION INTERVAL     .08 HOURS
                TOTAL TIME BASE  24.92 HOURS

        ENGLISH UNITS
            DRAINAGE AREA         SQUARE MILES
            PRECIPITATION DEPTH   INCHES
            LENGTH, ELEVATION     FEET
            FLOW                  CUBIC FEET PER SECOND
            STORAGE VOLUME        ACRE-FEET
            SURFACE AREA          ACRES
            TEMPERATURE           DEGREES FAHRENHEIT

*** *** *** *** *** *** *** *** *** *** *** *** *** *** *** *** *** *** *** *** *** *** *** *** *** *** *** *** *** *** *** *** *** ***

          ***************
          *             *
  6 KK    *   SWSM1     *     -LAND USE- NATURAL DESERT(MOUNTAIN)
          *             *
          ***************

                 SUB-BASIN SWSM1
                 24-HOUR SCS TYPE II RAINFALL WAS USED TO FINED TC & R FOR THIS BASIN
                 THIS BASIN USED RAINFALL REDUCTION FACTOR OF .99
                 RAINFALL DEPTH OF 4.20 WAS SPACIALLY REDUCED AS SHOWN BY THE PB RECORD
                 THE FOLLOWING PC RECORD USED A 24-HR SCS TYPE STORM

 11 IN        TIME DATA FOR INPUT TIME SERIES
               JXMIN           30  TIME INTERVAL IN MINUTES
              JXDATE      1     0  STARTING DATE
              JXTIME            0  STARTING TIME

          SUBBASIN RUNOFF DATA

 10 BA        SUBBASIN CHARACTERISTICS
                TAREA        1.99  SUBBASIN AREA

              PRECIPITATION DATA

 14 PB            STORM      4.16  BASIN TOTAL PRECIPITATION

 14 PI          INCREMENTAL PRECIPITATION PATTERN
```

.00	.00	.00	.00	.00	.00	.00	.00	.00	.00
.00	.00	.00	.00	.00	.00	.00	.00	.00	.00
.00	.00	.00	.00	.00	.00	.00	.00	.00	.00
.00	.00	.00	.00	.00	.00	.00	.00	.00	.00
.00	.00	.00	.00	.00	.00	.00	.00	.00	.00
.00	.00	.00	.00	.00	.00	.00	.00	.00	.00
.00	.00	.00	.00	.00	.00	.00	.00	.00	.00
.00	.00	.00	.00	.00	.00	.00	.00	.00	.00
.00	.00	.00	.00	.00	.00	.00	.00	.00	.00
.00	.00	.00	.00	.00	.00	.00	.00	.00	.00
.00	.00	.00	.00	.00	.00	.00	.00	.00	.00
.00	.00	.00	.00	.00	.00	.00	.00	.00	.00
.00	.00	.00	.00	.00	.00	.01	.01	.01	.01
.01	.01	.01	.01	.01	.01	.01	.01	.06	.06
.06	.06	.06	.06	.01	.01	.01	.01	.01	.01
.01	.01	.01	.01	.01	.01	.00	.00	.00	.00
.00	.00	.00	.00	.00	.00	.00	.00	.00	.00
.00	.00	.00	.00	.00	.00	.00	.00	.00	.00
.00	.00	.00	.00	.00	.00	.00	.00	.00	.00
.00	.00	.00	.00	.00	.00	.00	.00	.00	.00
.00	.00	.00	.00	.00	.00	.00	.00	.00	.00

.00	.00	.00	.00	.00	.00	.00	.00	.00	.00
.00	.00	.00	.00	.00	.00	.00	.00	.00	.00
.00	.00	.00	.00	.00	.00	.00	.00	.00	.00
.00	.00	.00	.00	.00	.00	.00	.00	.00	.00
.00	.00	.00	.00	.00	.00	.00	.00	.00	.00
.00	.00	.00	.00	.00	.00	.00	.00	.00	.00
.00	.00	.00	.00	.00	.00	.00	.00	.00	.00
.00	.00	.00	.00	.00	.00	.00	.00		

```
 20 LG          GREEN AND AMPT LOSS RATE
                  STRTL         .15  STARTING LOSS
                    DTH         .34  MOISTURE DEFICIT
                   PSIF        3.55  WETTING FRONT SUCTION
                  XKSAT         .69  HYDRAULIC CONDUCTIVITY
                  RTIMP       60.00  PERCENT IMPERVIOUS AREA

 21 UC          CLARK UNITGRAPH
                     TC         .48  TIME OF CONCENTRATION
                      R         .25  STORAGE COEFFICIENT

 22 UA          ACCUMULATED-AREA VS. TIME,  11 ORDINATES
                     .0       3.0       5.0       8.0      12.0      20.0      43.0      75.0      90.0      96.0
                  100.0

                                              ***

                                    UNIT HYDROGRAPH PARAMETERS
                               CLARK    TC=   .48 HR,       R=   .25 HR
                              SNYDER    TP=   .41 HR,      CP=   .90

                                          UNIT HYDROGRAPH
                                    20 END-OF-PERIOD ORDINATES
          98.       287.       637.      1825.      2842.      2649.      2028.      1446.      1032.       736.
         525.       374.       267.       190.       136.        97.        69.        49.        35.        25.

   ***          ***          ***          ***          ***

                  HYDROGRAPH AT STATION     SWSM1

  TOTAL RAINFALL =    4.16, TOTAL LOSS =    1.29, TOTAL EXCESS =    2.86

   PEAK FLOW     TIME                     MAXIMUM AVERAGE FLOW
                                   6-HR        24-HR        72-HR      24.92-HR
 +   (CFS)       (HR)
                            (CFS)
 +   2683.      12.25                454.        152.         147.         147.
                         (INCHES)   2.123       2.848        2.852        2.852
                          (AC-FT)    225.        302.         303.         303.

                  CUMULATIVE AREA =     1.99 SQ MI

*** *** *** *** *** *** *** *** *** *** *** *** *** *** *** *** *** *** *** *** *** *** *** *** *** *** *** *** *** *** *** *** *** ***

          ***************
          *             *
 24 KK    *   RSWSM     *     1
          *             *
          ***************

                 ROUTE FLOW FROM SUB-BASIN SWSM1 TO COMPUTATION POINT SWSM4

              HYDROGRAPH ROUTING DATA

 26 RS          STORAGE ROUTING
                 NSTPS          2  NUMBER OF SUBREACHES
                  ITYP       ELEV  TYPE OF INITIAL CONDITION
                RSVRIC    1168.00  INITIAL CONDITION
                     X        .00  WORKING R AND D COEFFICIENT

 27 RC          NORMAL DEPTH CHANNEL
                   ANL       .040  LEFT OVERBANK N-VALUE
                  ANCH       .050  MAIN CHANNEL N-VALUE
                   ANR       .040  RIGHT OVERBANK N-VALUE
                 RLNTH      8600.  REACH LENGTH
                   SEL      .0200  ENERGY SLOPE
                 ELMAX     1174.0  MAX. ELEV. FOR STORAGE/OUTFLOW CALCULATION

                                       CROSS-SECTION DATA
                       --- LEFT OVERBANK --- + ------ MAIN CHANNEL ------- + --- RIGHT OVERBANK ---
 29 RY        ELEVATION   1174.00   1172.00   1170.00   1168.00   1168.00   1170.00   1172.00   1174.00
 28 RX         DISTANCE       .00     30.00     40.00     50.00     80.00    100.00    110.00    210.00

                                              ***

                               COMPUTED STORAGE-OUTFLOW-ELEVATION DATA
```

STORAGE	.00	2.02	4.33	6.94	9.84	13.04	16.54	20.31	24.28	28.44
OUTFLOW	.00	19.04	62.40	126.88	212.21	318.83	447.47	616.88	820.76	1051.42
ELEVATION	1168.00	1168.32	1168.63	1168.95	1169.26	1169.58	1169.89	1170.21	1170.53	1170.84
STORAGE	32.81	37.37	42.13	47.14	53.20	60.53	69.15	79.04	90.21	102.67
OUTFLOW	1309.59	1595.92	1911.07	2241.47	2605.55	3032.83	3527.57	4097.69	4751.30	5496.25
ELEVATION	1171.16	1171.47	1171.79	1172.11	1172.42	1172.74	1173.05	1173.37	1173.68	1174.00

```
      ***           ***           ***           ***           ***

                        HYDROGRAPH AT STATION     RSWSM

  PEAK FLOW      TIME                           MAXIMUM AVERAGE FLOW
                                        6-HR       24-HR       72-HR      24.92-HR

 +   (CFS)       (HR)
                             (CFS)
 +    2410.      12.42                  454.        152.        146.        146.
                           (INCHES)    2.120       2.834       2.834       2.834
                            (AC-FT)     225.        301.        301.        301.

 PEAK STORAGE    TIME                          MAXIMUM AVERAGE STORAGE
                                        6-HR       24-HR       72-HR      24.92-HR

 + (AC-FT)       (HR)
       25.       12.42                    7.          3.          3.          3.

  PEAK STAGE     TIME                           MAXIMUM AVERAGE STAGE
                                        6-HR       24-HR       72-HR      24.92-HR

 +   (FEET)      (HR)
    1172.25      12.42               1169.57     1168.79     1168.77     1168.77

                           CUMULATIVE AREA =     1.99 SQ MI


*** *** *** *** *** *** *** *** *** *** *** *** *** *** *** *** *** *** *** *** *** *** *** *** *** *** *** *** *** *** *** *** *** ***


            **************
            *            *
 30 KK      *    SWSM4   *
            *            *
            **************
                              SUB-BASIN SWSM4-LAND USE- NATURAL DESERT(HILLSLOPE)
                              24-HOUR SCS TYPE II RAINFALL WAS USED TO FINED TC & R FOR THIS BASIN
                              THIS BASIN USED RAINFALL REDUCTION FACTOR OF .99

               SUBBASIN RUNOFF DATA

 34 BA           SUBBASIN CHARACTERISTICS
                       TAREA          .34  SUBBASIN AREA

                 PRECIPITATION DATA

 14 PB                 STORM         4.16  BASIN TOTAL PRECIPITATION

 14 PI             INCREMENTAL PRECIPITATION PATTERN
                      .00       .00       .00       .00       .00       .00       .00       .00       .00       .00
                      .00       .00       .00       .00       .00       .00       .00       .00       .00       .00
                      .00       .00       .00       .00       .00       .00       .00       .00       .00       .00
                      .00       .00       .00       .00       .00       .00       .00       .00       .00       .00
                      .00       .00       .00       .00       .00       .00       .00       .00       .00       .00
                      .00       .00       .00       .00       .00       .00       .00       .00       .00       .00
                      .00       .00       .00       .00       .00       .00       .00       .00       .00       .00
                      .00       .00       .00       .00       .00       .00       .00       .00       .00       .00
                      .00       .00       .00       .00       .00       .00       .00       .00       .00       .00
                      .00       .00       .00       .00       .00       .00       .00       .00       .00       .00
                      .00       .00       .00       .00       .00       .00       .00       .00       .00       .00
                      .00       .00       .00       .00       .00       .00       .00       .00       .00       .00
                      .00       .00       .00       .00       .00       .00       .01       .01       .01       .01
                      .01       .01       .01       .01       .01       .01       .01       .01       .06       .06
                      .06       .06       .06       .06       .01       .01       .01       .01       .01       .01
                      .01       .01       .01       .01       .01       .01       .00       .00       .00       .00
                      .00       .00       .00       .00       .00       .00       .00       .00       .00       .00
                      .00       .00       .00       .00       .00       .00       .00       .00       .00       .00
                      .00       .00       .00       .00       .00       .00       .00       .00       .00       .00
                      .00       .00       .00       .00       .00       .00       .00       .00       .00       .00
                      .00       .00       .00       .00       .00       .00       .00       .00       .00       .00
                      .00       .00       .00       .00       .00       .00       .00       .00       .00       .00
                      .00       .00       .00       .00       .00       .00       .00       .00       .00       .00
                      .00       .00       .00       .00       .00       .00       .00       .00       .00       .00
                      .00       .00       .00       .00       .00       .00       .00       .00       .00       .00
                      .00       .00       .00       .00       .00       .00       .00       .00       .00       .00
                      .00       .00       .00       .00       .00       .00       .00       .00       .00       .00
                      .00       .00       .00       .00       .00       .00       .00       .00       .00       .00
                      .00       .00       .00       .00       .00       .00       .00       .00

 35 LG           GREEN AND AMPT LOSS RATE
                       STRTL          .15  STARTING LOSS
                         DTH          .35  MOISTURE DEFICIT
                        PSIF         3.75  WETTING FRONT SUCTION
                      XKSAT           .29  HYDRAULIC CONDUCTIVITY
                      RTIMP           .00  PERCENT IMPERVIOUS AREA

 36 UC           CLARK UNITGRAPH
                          TC          .58  TIME OF CONCENTRATION
                           R          .56  STORAGE COEFFICIENT

 37 UA           ACCUMULATED-AREA VS. TIME,  11 ORDINATES
                      .0        3.0       5.0       8.0      12.0      20.0      43.0      75.0      90.0      96.0
                   100.0
```



```
                                                            ***

                                          UNIT HYDROGRAPH PARAMETERS
                                   CLARK    TC=    .58 HR,        R=    .56 HR
                                  SNYDER    TP=    .51 HR,       CP=    .63

                                              UNIT HYDROGRAPH
                                          40 END-OF-PERIOD ORDINATES
              7.        20.        36.        84.       188.       266.       271.       245.       211.       182.
            156.       135.       116.       100.        86.        74.        64.        55.        47.        40.
             35.        30.        26.        22.        19.        16.        14.        12.        10.         9.
              8.         7.         6.         5.         4.         4.         3.         3.         2.         2.

      ***           ***           ***           ***           ***

                        HYDROGRAPH AT STATION     SWSM4

    TOTAL RAINFALL =    4.16, TOTAL LOSS =    2.87, TOTAL EXCESS =    1.29

  PEAK FLOW      TIME                           MAXIMUM AVERAGE FLOW
                                        6-HR       24-HR       72-HR      24.92-HR

 +   (CFS)       (HR)
                             (CFS)
 +     289.      12.33                   47.         12.         11.         11.
                           (INCHES)    1.287       1.287       1.287       1.287
                            (AC-FT)      23.         23.         23.         23.

                           CUMULATIVE AREA =      .34 SQ MI


*** *** *** *** *** *** *** *** *** *** *** *** *** *** *** *** *** *** *** *** *** *** *** *** *** *** *** *** *** *** *** *** *** ***


            **************
            *            *
 39 KK      *    CSWSM   *     1
            *            *
            **************
                              COMBINE ROUTED FLOW FROM SUB-BASIN SWSM1 AND SWSM4

 41 HC           HYDROGRAPH COMBINATION
                       ICOMP            2  NUMBER OF HYDROGRAPHS TO COMBINE
                                                            ***

      ***           ***           ***           ***           ***

                        HYDROGRAPH AT STATION     CSWSM

  PEAK FLOW      TIME                           MAXIMUM AVERAGE FLOW
                                        6-HR       24-HR       72-HR      24.92-HR

 +   (CFS)       (HR)
                             (CFS)
 +    2694.      12.42                  501.        163.        157.        157.
                           (INCHES)    1.999       2.608       2.609       2.609
                            (AC-FT)     248.        324.        324.        324.

                           CUMULATIVE AREA =     2.33 SQ MI


*** *** *** *** *** *** *** *** *** *** *** *** *** *** *** *** *** *** *** *** *** *** *** *** *** *** *** *** *** *** *** *** *** ***


            **************
            *            *
 42 KK      *    SWSM2   *
            *            *
            **************
                              SUB-BASIN SWSM2-LAND USE- NATURAL DESERT(HILLSLOPE,MOUNTAIN)
                              24-HOUR SCS TYPE II RAINFALL WAS USED TO FINED TC & R FOR THIS BASIN
                              THIS BASIN USED RAINFALL REDUCTION FACTOR OF 1.00
                              RAINFALL DEPTH OF 4.20 WAS SPACIALLY REDUCED AS SHOWN BY THE PB RECORD
                              THE FOLLOWING PC RECORD USED A 24-HR SCS TYPE STORM

 47 IN           TIME DATA FOR INPUT TIME SERIES
                      JXMIN            30  TIME INTERVAL IN MINUTES
                     JXDATE       1     0  STARTING DATE
                     JXTIME             0  STARTING TIME

               SUBBASIN RUNOFF DATA

 46 BA           SUBBASIN CHARACTERISTICS
                       TAREA          .44  SUBBASIN AREA

                 PRECIPITATION DATA

 50 PB                 STORM         4.20  BASIN TOTAL PRECIPITATION

 50 PI             INCREMENTAL PRECIPITATION PATTERN
                      .00       .00       .00       .00       .00       .00       .00       .00       .00       .00
                      .00       .00       .00       .00       .00       .00       .00       .00       .00       .00
                      .00       .00       .00       .00       .00       .00       .00       .00       .00       .00
```

.00	.00	.00	.00	.00	.00	.00	.00	.00	.00
.00	.00	.00	.00	.00	.00	.00	.00	.00	.00
.00	.00	.00	.00	.00	.00	.00	.00	.00	.00
.00	.00	.00	.00	.00	.00	.00	.00	.00	.00
.00	.00	.00	.00	.00	.00	.00	.00	.00	.00
.00	.00	.00	.00	.00	.00	.00	.00	.00	.00
.00	.00	.00	.00	.00	.00	.00	.00	.00	.00
.00	.00	.00	.00	.00	.00	.00	.00	.00	.00
.00	.00	.00	.00	.00	.00	.00	.00	.00	.00
.00	.00	.00	.00	.00	.00	.01	.01	.01	.01
.01	.01	.01	.01	.01	.01	.01	.01	.06	.06
.06	.06	.06	.06	.01	.01	.01	.01	.01	.01
.01	.01	.01	.01	.01	.01	.00	.00	.00	.00
.00	.00	.00	.00	.00	.00	.00	.00	.00	.00
.00	.00	.00	.00	.00	.00	.00	.00	.00	.00
.00	.00	.00	.00	.00	.00	.00	.00	.00	.00
.00	.00	.00	.00	.00	.00	.00	.00	.00	.00
.00	.00	.00	.00	.00	.00	.00	.00	.00	.00
.00	.00	.00	.00	.00	.00	.00	.00	.00	.00
.00	.00	.00	.00	.00	.00	.00	.00	.00	.00
.00	.00	.00	.00	.00	.00	.00	.00	.00	.00
.00	.00	.00	.00	.00	.00	.00	.00	.00	.00
.00	.00	.00	.00	.00	.00	.00	.00	.00	.00
.00	.00	.00	.00	.00	.00	.00	.00	.00	.00
.00	.00	.00	.00	.00	.00	.00	.00	.00	.00
.00	.00	.00	.00	.00	.00	.00	.00		

56 LG GREEN AND AMPT LOSS RATE
STRTL .15 STARTING LOSS
DTH .26 MOISTURE DEFICIT
PSIF 3.10 WETTING FRONT SUCTION
XKSAT .94 HYDRAULIC CONDUCTIVITY
RTIMP 25.00 PERCENT IMPERVIOUS AREA

57 UC CLARK UNITGRAPH
TC .42 TIME OF CONCENTRATION
R .33 STORAGE COEFFICIENT

58 UA ACCUMULATED-AREA VS. TIME, 11 ORDINATES
.0 3.0 5.0 8.0 12.0 20.0 43.0 75.0 90.0 96.0
100.0

***

UNIT HYDROGRAPH PARAMETERS
CLARK TC= .42 HR, R= .33 HR
SNYDER TP= .38 HR, CP= .77

UNIT HYDROGRAPH
25 END-OF-PERIOD ORDINATES

19.	61.	192.	446.	564.	476.	370.	287.	222.	173.
134.	104.	81.	63.	49.	38.	29.	23.	18.	14.
11.	8.	6.	5.	4.					

*** *** *** *** ***

HYDROGRAPH AT STATION SWSM2

TOTAL RAINFALL = 4.20, TOTAL LOSS = 2.51, TOTAL EXCESS = 1.69

PEAK FLOW	TIME		MAXIMUM AVERAGE FLOW			
			6-HR	24-HR	72-HR	24.92-HR
+ (CFS)	(HR)					
		(CFS)				
+ 421.	12.25		65.	20.	19.	19.
		(INCHES)	1.373	1.678	1.680	1.680
		(AC-FT)	32.	39.	39.	39.

CUMULATIVE AREA = .44 SQ MI

*** ***

60 KK * SWSM3 *

SUB-BASIN SWSM3-LAND USE- NATURAL DESERT(HILLSLOPE)
24-HOUR SCS TYPE II RAINFALL WAS USED TO FINED TC & R FOR THIS BASIN
THIS BASIN USED RAINFALL REDUCTION FACTOR OF1.00
RAINFALL DEPTH OF 4.20 WAS SPACIALLY REDUCED AS SHOWN BY THE PB RECORD
THE FOLLOWING PC RECORD USED A 24-HR SCS TYPE STORM

65 IN TIME DATA FOR INPUT TIME SERIES
JXMIN 30 TIME INTERVAL IN MINUTES
JXDATE 1 0 STARTING DATE
JXTIME 0 STARTING TIME

SUBBASIN RUNOFF DATA

64 BA SUBBASIN CHARACTERISTICS
TAREA .28 SUBBASIN AREA

PRECIPITATION DATA

68 PB STORM 4.20 BASIN TOTAL PRECIPITATION

68 PI INCREMENTAL PRECIPITATION PATTERN

.00	.00	.00	.00	.00	.00	.00	.00	.00	.00
.00	.00	.00	.00	.00	.00	.00	.00	.00	.00
.00	.00	.00	.00	.00	.00	.00	.00	.00	.00
.00	.00	.00	.00	.00	.00	.00	.00	.00	.00
.00	.00	.00	.00	.00	.00	.00	.00	.00	.00
.00	.00	.00	.00	.00	.00	.00	.00	.00	.00
.00	.00	.00	.00	.00	.00	.00	.00	.00	.00
.00	.00	.00	.00	.00	.00	.00	.00	.00	.00
.00	.00	.00	.00	.00	.00	.00	.00	.00	.00
.00	.00	.00	.00	.00	.00	.00	.00	.00	.00
.00	.00	.00	.00	.00	.00	.00	.00	.00	.00
.00	.00	.00	.00	.00	.00	.00	.00	.00	.00
.00	.00	.00	.00	.00	.00	.01	.01	.01	.01
.01	.01	.01	.01	.01	.01	.01	.01	.06	.06
.06	.06	.06	.06	.01	.01	.01	.01	.01	.01
.01	.01	.01	.01	.01	.01	.00	.00	.00	.00
.00	.00	.00	.00	.00	.00	.00	.00	.00	.00
.00	.00	.00	.00	.00	.00	.00	.00	.00	.00
.00	.00	.00	.00	.00	.00	.00	.00	.00	.00
.00	.00	.00	.00	.00	.00	.00	.00	.00	.00
.00	.00	.00	.00	.00	.00	.00	.00	.00	.00
.00	.00	.00	.00	.00	.00	.00	.00	.00	.00
.00	.00	.00	.00	.00	.00	.00	.00	.00	.00
.00	.00	.00	.00	.00	.00	.00	.00	.00	.00
.00	.00	.00	.00	.00	.00	.00	.00	.00	.00
.00	.00	.00	.00	.00	.00	.00	.00	.00	.00
.00	.00	.00	.00	.00	.00	.00	.00	.00	.00
.00	.00	.00	.00	.00	.00	.00	.00	.00	.00
.00	.00	.00	.00	.00	.00	.00	.00		

74 LG GREEN AND AMPT LOSS RATE
STRTL .15 STARTING LOSS
DTH .30 MOISTURE DEFICIT
PSIF 3.75 WETTING FRONT SUCTION
XKSAT .63 HYDRAULIC CONDUCTIVITY
RTIMP .00 PERCENT IMPERVIOUS AREA

75 UC CLARK UNITGRAPH
TC .62 TIME OF CONCENTRATION
R .53 STORAGE COEFFICIENT

76 UA ACCUMULATED-AREA VS. TIME, 11 ORDINATES
.0 3.0 5.0 8.0 12.0 20.0 43.0 75.0 90.0 96.0
100.0

***

UNIT HYDROGRAPH PARAMETERS
CLARK TC= .62 HR, R= .53 HR
SNYDER TP= .54 HR, CP= .69

UNIT HYDROGRAPH
39 END-OF-PERIOD ORDINATES

6.	16.	27.	58.	136.	212.	230.	211.	184.	157.
135.	115.	98.	84.	72.	62.	53.	45.	39.	33.
28.	24.	21.	18.	15.	13.	11.	9.	8.	7.
6.	5.	4.	4.	3.	3.	2.	2.	2.	

*** *** *** *** ***

HYDROGRAPH AT STATION SWSM3

TOTAL RAINFALL = 4.20, TOTAL LOSS = 3.19, TOTAL EXCESS = 1.01

PEAK FLOW	TIME		MAXIMUM AVERAGE FLOW			
			6-HR	24-HR	72-HR	24.92-HR
+ (CFS)	(HR)					
		(CFS)				
+ 191.	12.42		30.	8.	7.	7.
		(INCHES)	1.005	1.005	1.005	1.005
		(AC-FT)	15.	15.	15.	15.

CUMULATIVE AREA = .28 SQ MI

*** ***

78 KK * SWSM5 *

SUB-BASIN SWSM5-LAND USE- NATURAL DESERT(HILLSLOPE)
24-HOUR SCS TYPE II RAINFALL WAS USED TO FINED TC & R FOR THIS BASIN
THIS BASIN USED RAINFALL REDUCTION FACTOR OF1.00
RAINFALL DEPTH OF 4.20 WAS SPACIALLY REDUCED AS SHOWN BY THE PB RECORD
THE FOLLOWING PC RECORD USED A 24-HR SCS TYPE STORM

```
83 IN         TIME DATA FOR INPUT TIME SERIES
                 JXMIN        30  TIME INTERVAL IN MINUTES
                 JXDATE    1   0  STARTING DATE
                 JXTIME        0  STARTING TIME

            SUBBASIN RUNOFF DATA

82 BA         SUBBASIN CHARACTERISTICS
                 TAREA       .09  SUBBASIN AREA

              PRECIPITATION DATA

86 PB            STORM      4.20  BASIN TOTAL PRECIPITATION

86 PI           INCREMENTAL PRECIPITATION PATTERN
                  .00     .00     .00     .00     .00     .00     .00     .00     .00     .00
                  .00     .00     .00     .00     .00     .00     .00     .00     .00     .00
                  .00     .00     .00     .00     .00     .00     .00     .00     .00     .00
                  .00     .00     .00     .00     .00     .00     .00     .00     .00     .00
                  .00     .00     .00     .00     .00     .00     .00     .00     .00     .00
                  .00     .00     .00     .00     .00     .00     .00     .00     .00     .00
                  .00     .00     .00     .00     .00     .00     .00     .00     .00     .00
                  .00     .00     .00     .00     .00     .00     .00     .00     .00     .00
                  .00     .00     .00     .00     .00     .00     .00     .00     .00     .00
                  .00     .00     .00     .00     .00     .00     .00     .00     .00     .00
                  .00     .00     .00     .00     .00     .00     .00     .00     .00     .00
                  .00     .00     .00     .00     .00     .00     .00     .00     .00     .00
                  .00     .00     .00     .00     .00     .00     .01     .01     .01     .01
                  .01     .01     .01     .01     .01     .01     .01     .01     .06     .06
                  .06     .06     .06     .06     .01     .01     .01     .01     .01     .01
                  .01     .01     .01     .01     .01     .01     .00     .00     .00     .00
                  .00     .00     .00     .00     .00     .00     .00     .00     .00     .00
                  .00     .00     .00     .00     .00     .00     .00     .00     .00     .00
                  .00     .00     .00     .00     .00     .00     .00     .00     .00     .00
                  .00     .00     .00     .00     .00     .00     .00     .00     .00     .00
                  .00     .00     .00     .00     .00     .00     .00     .00     .00     .00
                  .00     .00     .00     .00     .00     .00     .00     .00     .00     .00
                  .00     .00     .00     .00     .00     .00     .00     .00     .00     .00
                  .00     .00     .00     .00     .00     .00     .00     .00     .00     .00
                  .00     .00     .00     .00     .00     .00     .00     .00     .00     .00
                  .00     .00     .00     .00     .00     .00     .00     .00     .00     .00
                  .00     .00     .00     .00     .00     .00     .00     .00     .00     .00
                  .00     .00     .00     .00     .00     .00     .00     .00     .00     .00
                  .00     .00     .00     .00     .00     .00     .00     .00

92 LG         GREEN AND AMPT LOSS RATE
                 STRTL       .15  STARTING LOSS
                   DTH       .25  MOISTURE DEFICIT
                  PSIF      8.60  WETTING FRONT SUCTION
                 XKSAT       .07  HYDRAULIC CONDUCTIVITY
                 RTIMP       .00  PERCENT IMPERVIOUS AREA

93 UC         CLARK UNITGRAPH
                    TC       .43  TIME OF CONCENTRATION
                     R       .52  STORAGE COEFFICIENT

94 UA         ACCUMULATED-AREA VS. TIME,  11 ORDINATES
                    .0     3.0     5.0     8.0    12.0    20.0    43.0    75.0    90.0    96.0
                 100.0

                                        ***

                                  UNIT HYDROGRAPH PARAMETERS
                                 CLARK   TC=   .43 HR,       R=   .52 HR
                                 SNYDER  TP=   .41 HR,      CP=   .57

                                       UNIT HYDROGRAPH
                                  36 END-OF-PERIOD ORDINATES
            3.      8.     24.     59.     82.     77.     66.     56.     48.     41.
           35.     30.     25.     21.     18.     15.     13.     11.     10.      8.
            7.      6.      5.      4.      4.      3.      3.      2.      2.      2.
            1.      1.      1.      1.      1.      1.

   ***         ***         ***         ***         ***

               HYDROGRAPH AT STATION     SWSM5

  TOTAL RAINFALL =    4.20, TOTAL LOSS =    2.32, TOTAL EXCESS =    1.88

 PEAK FLOW     TIME                       MAXIMUM AVERAGE FLOW
                                  6-HR      24-HR       72-HR      24.92-HR
+  (CFS)       (HR)
                       (CFS)
+    100.     12.25                18.         5.          4.          4.
                     (INCHES)    1.872      1.873       1.873       1.873
                      (AC-FT)       9.         9.          9.          9.

                 CUMULATIVE AREA =     .09 SQ MI

*** *** *** *** *** *** *** *** *** *** *** *** *** *** *** *** *** *** *** *** *** *** *** *** *** *** *** *** *** *** *** *** *** ***
```



```
               **************
               *            *
96 KK          *   SWSM6    *
               *            *
               **************
                    SUB-BASIN SWSM6-LAND USE- NATURAL DESERT(HILLSLOPE,MOUNTAINS)
                    24-HOUR SCS TYPE II RAINFALL WAS USED TO FINED TC & R FOR THIS BASIN
                    THIS BASIN USED RAINFALL REDUCTION FACTOR OF 1.00
                    RAINFALL DEPTH OF 4.20 WAS SPACIALLY REDUCED AS SHOWN BY THE PB RECORD
                    THE FOLLOWING PC RECORD USED A 24-HR SCS TYPE STORM

101 IN        TIME DATA FOR INPUT TIME SERIES
                 JXMIN        30  TIME INTERVAL IN MINUTES
                 JXDATE    1   0  STARTING DATE
                 JXTIME        0  STARTING TIME

            SUBBASIN RUNOFF DATA

100 BA        SUBBASIN CHARACTERISTICS
                 TAREA       .95  SUBBASIN AREA

              PRECIPITATION DATA

104 PB           STORM      4.20  BASIN TOTAL PRECIPITATION

104 PI          INCREMENTAL PRECIPITATION PATTERN
                  .00     .00     .00     .00     .00     .00     .00     .00     .00     .00
                  .00     .00     .00     .00     .00     .00     .00     .00     .00     .00
                  .00     .00     .00     .00     .00     .00     .00     .00     .00     .00
                  .00     .00     .00     .00     .00     .00     .00     .00     .00     .00
                  .00     .00     .00     .00     .00     .00     .00     .00     .00     .00
                  .00     .00     .00     .00     .00     .00     .00     .00     .00     .00
                  .00     .00     .00     .00     .00     .00     .00     .00     .00     .00
                  .00     .00     .00     .00     .00     .00     .00     .00     .00     .00
                  .00     .00     .00     .00     .00     .00     .00     .00     .00     .00
                  .00     .00     .00     .00     .00     .00     .00     .00     .00     .00
                  .00     .00     .00     .00     .00     .00     .00     .00     .00     .00
                  .00     .00     .00     .00     .00     .00     .00     .00     .00     .00
                  .00     .00     .00     .00     .00     .00     .01     .01     .01     .01
                  .01     .01     .01     .01     .01     .01     .01     .01     .06     .06
                  .06     .06     .06     .06     .01     .01     .01     .01     .01     .01
                  .01     .01     .01     .01     .01     .01     .00     .00     .00     .00
                  .00     .00     .00     .00     .00     .00     .00     .00     .00     .00
                  .00     .00     .00     .00     .00     .00     .00     .00     .00     .00
                  .00     .00     .00     .00     .00     .00     .00     .00     .00     .00
                  .00     .00     .00     .00     .00     .00     .00     .00     .00     .00
                  .00     .00     .00     .00     .00     .00     .00     .00     .00     .00
                  .00     .00     .00     .00     .00     .00     .00     .00     .00     .00
                  .00     .00     .00     .00     .00     .00     .00     .00     .00     .00
                  .00     .00     .00     .00     .00     .00     .00     .00     .00     .00
                  .00     .00     .00     .00     .00     .00     .00     .00     .00     .00
                  .00     .00     .00     .00     .00     .00     .00     .00     .00     .00
                  .00     .00     .00     .00     .00     .00     .00     .00     .00     .00
                  .00     .00     .00     .00     .00     .00     .00     .00     .00     .00
                  .00     .00     .00     .00     .00     .00     .00     .00

110 LG        GREEN AND AMPT LOSS RATE
                 STRTL       .15  STARTING LOSS
                   DTH       .32  MOISTURE DEFICIT
                  PSIF      4.95  WETTING FRONT SUCTION
                 XKSAT       .56  HYDRAULIC CONDUCTIVITY
                 RTIMP     40.00  PERCENT IMPERVIOUS AREA

111 UC        CLARK UNITGRAPH
                    TC       .47  TIME OF CONCENTRATION
                     R       .36  STORAGE COEFFICIENT

112 UA        ACCUMULATED-AREA VS. TIME,  11 ORDINATES
                    .0     3.0     5.0     8.0    12.0    20.0    43.0    75.0    90.0    96.0
                 100.0

                                        ***

                                  UNIT HYDROGRAPH PARAMETERS
                                 CLARK   TC=   .47 HR,       R=   .36 HR
                                 SNYDER  TP=   .41 HR,      CP=   .73

                                       UNIT HYDROGRAPH
                                  27 END-OF-PERIOD ORDINATES
           35.    107.    266.    724.   1091.   1039.    856.    677.    536.    424.
          335.    265.    210.    166.    131.    104.     82.     65.     51.     41.
           32.     25.     20.     16.     13.     10.      8.

   ***         ***         ***         ***         ***

               HYDROGRAPH AT STATION     SWSM6

  TOTAL RAINFALL =    4.20, TOTAL LOSS =    1.93, TOTAL EXCESS =    2.27

 PEAK FLOW     TIME                       MAXIMUM AVERAGE FLOW
                                  6-HR      24-HR       72-HR      24.92-HR
+  (CFS)       (HR)
                       (CFS)
+   1044.     12.25               181.        58.         56.         56.
                     (INCHES)    1.768      2.256       2.260       2.260
                      (AC-FT)      90.       114.        115.        115.
```

CUMULATIVE AREA = .95 SQ MI

*** ***

```
           **************
           *            *
114 KK     *    SWSM7   *
           *            *
           **************
```

SUB-BASIN SWSM7-LAND USE- NATURAL DESERT(HILLSLOPE,MOUNTAIN)
24-HOUR SCS TYPE II RAINFALL WAS USED TO FINED TC & R FOR THIS BASIN
THIS BASIN USED RAINFALL REDUCTION FACTOR OF1.00
RAINFALL DEPTH OF 4.20 WAS SPACIALLY REDUCED AS SHOWN BY THE PB RECORD
THE FOLLOWING PC RECORD USED A 24-HR SCS TYPE STORM

119 IN TIME DATA FOR INPUT TIME SERIES

JXMIN		30	TIME INTERVAL IN MINUTES
JXDATE	1	0	STARTING DATE
JXTIME		0	STARTING TIME

SUBBASIN RUNOFF DATA

118 BA SUBBASIN CHARACTERISTICS

TAREA .10 SUBBASIN AREA

PRECIPITATION DATA

122 PB STORM 4.20 BASIN TOTAL PRECIPITATION

122 PI INCREMENTAL PRECIPITATION PATTERN

.00	.00	.00	.00	.00	.00	.00	.00	.00	.00
.00	.00	.00	.00	.00	.00	.00	.00	.00	.00
.00	.00	.00	.00	.00	.00	.00	.00	.00	.00
.00	.00	.00	.00	.00	.00	.00	.00	.00	.00
.00	.00	.00	.00	.00	.00	.00	.00	.00	.00
.00	.00	.00	.00	.00	.00	.00	.00	.00	.00
.00	.00	.00	.00	.00	.00	.00	.00	.00	.00
.00	.00	.00	.00	.00	.00	.00	.00	.00	.00
.00	.00	.00	.00	.00	.00	.00	.00	.00	.00
.00	.00	.00	.00	.00	.00	.00	.00	.00	.00
.00	.00	.00	.00	.00	.00	.00	.00	.00	.00
.00	.00	.00	.00	.00	.00	.00	.00	.00	.00
.00	.00	.00	.00	.00	.00	.01	.01	.01	.01
.01	.01	.01	.01	.01	.01	.01	.01	.06	.06
.06	.06	.06	.06	.01	.01	.01	.01	.01	.01
.01	.01	.01	.01	.01	.01	.00	.00	.00	.00
.00	.00	.00	.00	.00	.00	.00	.00	.00	.00
.00	.00	.00	.00	.00	.00	.00	.00	.00	.00
.00	.00	.00	.00	.00	.00	.00	.00	.00	.00
.00	.00	.00	.00	.00	.00	.00	.00	.00	.00
.00	.00	.00	.00	.00	.00	.00	.00	.00	.00
.00	.00	.00	.00	.00	.00	.00	.00	.00	.00
.00	.00	.00	.00	.00	.00	.00	.00	.00	.00
.00	.00	.00	.00	.00	.00	.00	.00	.00	.00
.00	.00	.00	.00	.00	.00	.00	.00	.00	.00
.00	.00	.00	.00	.00	.00	.00	.00	.00	.00
.00	.00	.00	.00	.00	.00	.00	.00	.00	.00
.00	.00	.00	.00	.00	.00	.00	.00	.00	.00
.00	.00	.00	.00	.00	.00	.00	.00		

110 LG GREEN AND AMPT LOSS RATE

STRTL	.15	STARTING LOSS
DTH	.32	MOISTURE DEFICIT
PSIF	4.95	WETTING FRONT SUCTION
XKSAT	.56	HYDRAULIC CONDUCTIVITY
RTIMP	40.00	PERCENT IMPERVIOUS AREA

128 UC CLARK UNITGRAPH

TC	.18	TIME OF CONCENTRATION
R	.14	STORAGE COEFFICIENT

129 UA ACCUMULATED-AREA VS. TIME, 11 ORDINATES

.0	3.0	5.0	8.0	12.0	20.0	43.0	75.0	90.0	96.0
100.0									

***

UNIT HYDROGRAPH PARAMETERS
CLARK TC= .18 HR, R= .14 HR
SNYDER TP= .18 HR, CP= .74

UNIT HYDROGRAPH
11 END-OF-PERIOD ORDINATES

29.	186.	249.	142.	77.	42.	23.	12.	7.	4.
2.									

*** *** *** *** ***

HYDROGRAPH AT STATION SWSM7

TOTAL RAINFALL = 4.20, TOTAL LOSS = 1.93, TOTAL EXCESS = 2.27

PEAK FLOW	TIME		MAXIMUM AVERAGE FLOW			
			6-HR	24-HR	72-HR	24.92-HR
+ (CFS)	(HR)					
		(CFS)				
+ 150.	12.08		19.	6.	6.	6.
		(INCHES)	1.772	2.261	2.263	2.263
		(AC-FT)	9.	12.	12.	12.

CUMULATIVE AREA = .10 SQ MI

*** ***

```
           **************
           *            *
131 KK     *    SWSM8   *
           *            *
           **************
```

SUB-BASIN SWSM8-LAND USE- NATURAL DESERT(MOUNTAIN)
24-HOUR SCS TYPE II RAINFALL WAS USED TO FINED TC & R FOR THIS BASIN
THIS BASIN USED RAINFALL REDUCTION FACTOR OF1.00
RAINFALL DEPTH OF 4.20 WAS SPACIALLY REDUCED AS SHOWN BY THE PB RECORD
THE FOLLOWING PC RECORD USED A 24-HR SCS TYPE STORM

136 IN TIME DATA FOR INPUT TIME SERIES

JXMIN		30	TIME INTERVAL IN MINUTES
JXDATE	1	0	STARTING DATE
JXTIME		0	STARTING TIME

SUBBASIN RUNOFF DATA

135 BA SUBBASIN CHARACTERISTICS

TAREA .03 SUBBASIN AREA

PRECIPITATION DATA

139 PB STORM 4.20 BASIN TOTAL PRECIPITATION

139 PI INCREMENTAL PRECIPITATION PATTERN

.00	.00	.00	.00	.00	.00	.00	.00	.00	.00
.00	.00	.00	.00	.00	.00	.00	.00	.00	.00
.00	.00	.00	.00	.00	.00	.00	.00	.00	.00
.00	.00	.00	.00	.00	.00	.00	.00	.00	.00
.00	.00	.00	.00	.00	.00	.00	.00	.00	.00
.00	.00	.00	.00	.00	.00	.00	.00	.00	.00
.00	.00	.00	.00	.00	.00	.00	.00	.00	.00
.00	.00	.00	.00	.00	.00	.00	.00	.00	.00
.00	.00	.00	.00	.00	.00	.00	.00	.00	.00
.00	.00	.00	.00	.00	.00	.00	.00	.00	.00
.00	.00	.00	.00	.00	.00	.00	.00	.00	.00
.00	.00	.00	.00	.00	.00	.00	.00	.00	.00
.00	.00	.00	.00	.00	.00	.01	.01	.01	.01
.01	.01	.01	.01	.01	.01	.01	.01	.06	.06
.06	.06	.06	.06	.01	.01	.01	.01	.01	.01
.01	.01	.01	.01	.01	.01	.00	.00	.00	.00
.00	.00	.00	.00	.00	.00	.00	.00	.00	.00
.00	.00	.00	.00	.00	.00	.00	.00	.00	.00
.00	.00	.00	.00	.00	.00	.00	.00	.00	.00
.00	.00	.00	.00	.00	.00	.00	.00	.00	.00
.00	.00	.00	.00	.00	.00	.00	.00	.00	.00
.00	.00	.00	.00	.00	.00	.00	.00	.00	.00
.00	.00	.00	.00	.00	.00	.00	.00	.00	.00
.00	.00	.00	.00	.00	.00	.00	.00	.00	.00
.00	.00	.00	.00	.00	.00	.00	.00	.00	.00
.00	.00	.00	.00	.00	.00	.00	.00	.00	.00
.00	.00	.00	.00	.00	.00	.00	.00	.00	.00
.00	.00	.00	.00	.00	.00	.00	.00	.00	.00
.00	.00	.00	.00	.00	.00	.00	.00		

110 LG GREEN AND AMPT LOSS RATE

STRTL	.15	STARTING LOSS
DTH	.32	MOISTURE DEFICIT
PSIF	4.95	WETTING FRONT SUCTION
XKSAT	.56	HYDRAULIC CONDUCTIVITY
RTIMP	40.00	PERCENT IMPERVIOUS AREA

145 UC CLARK UNITGRAPH

TC	.15	TIME OF CONCENTRATION
R	.17	STORAGE COEFFICIENT

146 UA ACCUMULATED-AREA VS. TIME, 11 ORDINATES

.0	3.0	5.0	8.0	12.0	20.0	43.0	75.0	90.0	96.0
100.0									

***

UNIT HYDROGRAPH PARAMETERS
CLARK TC= .15 HR, R= .17 HR
SNYDER TP= .17 HR, CP= .60

UNIT HYDROGRAPH
13 END-OF-PERIOD ORDINATES

```
                15.      54.      63.      39.      24.      15.       9.       6.       3.       2.
                 1.       1.       0.

     ***              ***              ***              ***              ***

                          HYDROGRAPH AT STATION     SWSM8

     TOTAL RAINFALL =    4.20, TOTAL LOSS =    1.93, TOTAL EXCESS =    2.27

   PEAK FLOW     TIME                          MAXIMUM AVERAGE FLOW
                                      6-HR       24-HR       72-HR      24.92-HR
+    (CFS)       (HR)
                          (CFS)
+       43.     12.00                  6.          2.          2.          2.
                         (INCHES)    1.771       2.260       2.262       2.262
                         (AC-FT)       3.          4.          4.          4.

                         CUMULATIVE AREA =     .03 SQ MI
```

*** ***

```
            **************
            *            *
 148 KK     *    CMBALL  *
            *            *
            **************
                        COMBINE ALL OF THE FLOW IN THE SWSM WATERSHED AND USE BASIN AND PUMP SYSTEM

 150 HC           HYDROGRAPH COMBINATION
                       ICOMP           7  NUMBER OF HYDROGRAPHS TO COMBINE
                                                                  ***

     ***              ***              ***              ***              ***

                          HYDROGRAPH AT STATION    CMBALL

   PEAK FLOW     TIME                          MAXIMUM AVERAGE FLOW
                                      6-HR       24-HR       72-HR      24.92-HR
+    (CFS)       (HR)
                          (CFS)
+     4355.     12.33                819.        261.        251.        251.
                         (INCHES)    1.805       2.298       2.300       2.300
                         (AC-FT)       406.        517.        518.        518.

                         CUMULATIVE AREA =    4.22 SQ MI
```

*** ***

```
            **************
            *            *
 151 KK     *     BASIN  *
            *            *
            **************
                        **********SOUTWEST SOUTH MOUNTAIN BASIN**********
                        A BASIN AT RESERVATION BOUNDAY WILL COLLECT ALL FLOWS AND A PUMP STATION WILL
                        PUMP ALL FLOWS TO THE DEAD HOARSE DITCH WITH A MAXIMUM OUTFLOW OF 24 CFS
                        THE BASIN WILL BE 40 ACRES ON TOP AND 33 ACRES ON THE BOTTOM AND 12 FEET
                        DEEP

              HYDROGRAPH ROUTING DATA

 157 RS           STORAGE ROUTING
                       NSTPS           1  NUMBER OF SUBREACHES
                        ITYP        ELEV  TYPE OF INITIAL CONDITION
                       RSVRIC      -1.00  INITIAL CONDITION
                           X         .00 WORKING R AND D COEFFICIENT

 158 SA                AREA        33.0      33.9      34.8      35.6      36.5      37.4      38.3      39.1      40.0

 159 SQ           DISCHARGE         50.       50.       50.       50.       50.       50.       50.       50.       50.

 160 SE           ELEVATION         .00      2.00      4.00      6.00      8.00     10.00     12.00     14.00     16.00
                                                                  ***

                                        COMPUTED STORAGE-ELEVATION DATA

              STORAGE         .00     66.90    135.60    205.99    278.09    351.99    427.69    505.09    584.19
            ELEVATION         .00      2.00      4.00      6.00      8.00     10.00     12.00     14.00     16.00

     ***              ***              ***              ***              ***

                          HYDROGRAPH AT STATION     BASIN

   PEAK FLOW     TIME                          MAXIMUM AVERAGE FLOW
                                      6-HR       24-HR       72-HR      24.92-HR
+    (CFS)       (HR)
```



```
                          (CFS)
+       50.      .08                  50.         50.         50.         50.
                         (INCHES)     .110        .441        .457        .457
                         (AC-FT)       25.         99.        103.        103.

 PEAK STORAGE    TIME                          MAXIMUM AVERAGE STORAGE
                                      6-HR       24-HR       72-HR      24.92-HR
+  (AC-FT)       (HR)
      420.      24.17                419.        215.        207.        207.

  PEAK STAGE    TIME                          MAXIMUM AVERAGE STAGE
                                      6-HR       24-HR       72-HR      24.92-HR
+    (FEET)      (HR)
     11.80      24.17                11.76       6.07        5.85        5.85

                         CUMULATIVE AREA =    4.22 SQ MI
```

*** ***

```
            **************
            *            *
 161 KK     *     PUMP   *
            *            *
            **************
                        THIS WILL SIMULATE A PUMP PUMPING AT A RATE OF 24 CFS TO DEAD HORSE DITCH

 163 KO           OUTPUT CONTROL VARIABLES
                       IPRNT           1  PRINT CONTROL
                       IPLOT           0  PLOT CONTROL
                        QSCAL          0.  HYDROGRAPH PLOT SCALE

              HYDROGRAPH ROUTING DATA

 164 RK           KINEMATIC WAVE STREAM ROUTING
                           L        6600.  CHANNEL LENGTH
                           S        .0010  SLOPE
                           N         .013  CHANNEL ROUGHNESS COEFFICIENT
                          CA          .00  CONTRIBUTING AREA
                       SHAPE         CIRC  CHANNEL SHAPE
                          WD         2.00  BOTTOM WIDTH OR DIAMETER
                           Z          .00  SIDE SLOPE
                       NDXMIN            2  MINIMUM NUMBER OF DX INTERVALS
                                                                  ***
                                    COMPUTED KINEMATIC PARAMETERS
                                        VARIABLE TIME STEP
                                    (DT SHOWN IS A MINIMUM)

                 ELEMENT    ALPHA        M         DT         DX       PEAK    TIME TO PEAK      VOLUME    MAXIMUM CELERITY
                                                   (MIN)      (FT)      (CFS)       (MIN)        (IN)       (FPS)

                    MAIN     2.20     1.25         .83     253.85      50.00       25.82         .45        5.13

CONTINUITY SUMMARY (AC-FT) - INFLOW= .1028E+03  EXCESS= .0000E+00 OUTFLOW= .1012E+03 BASIN STORAGE= .1762E+01 PERCENT ERROR=   -.2

                                    INTERPOLATED TO SPECIFIED COMPUTATION INTERVAL

                    MAIN     2.20     1.25        5.00                 50.00       30.00         .45
```

****

HYDROGRAPH AT STATION PUMP

****

DA	MON	HRMN	ORD	FLOW	DA	MON	HRMN	ORD	FLOW	DA	MON	HRMN	ORD	FLOW	DA	MON	HRMN	ORD	FLOW
1		0000	1	0.	1		0615	76	50.	1		1230	151	50.	1		1845	226	50.
1		0005	2	0.	1		0620	77	50.	1		1235	152	50.	1		1850	227	50.
1		0010	3	0.	1		0625	78	50.	1		1240	153	50.	1		1855	228	50.
1		0015	4	0.	1		0630	79	50.	1		1245	154	50.	1		1900	229	50.
1		0020	5	0.	1		0635	80	50.	1		1250	155	50.	1		1905	230	50.
1		0025	6	0.	1		0640	81	50.	1		1255	156	50.	1		1910	231	50.
1		0030	7	50.	1		0645	82	50.	1		1300	157	50.	1		1915	232	50.
1		0035	8	50.	1		0650	83	50.	1		1305	158	50.	1		1920	233	50.
1		0040	9	50.	1		0655	84	50.	1		1310	159	50.	1		1925	234	50.
1		0045	10	50.	1		0700	85	50.	1		1315	160	50.	1		1930	235	50.
1		0050	11	50.	1		0705	86	50.	1		1320	161	50.	1		1935	236	50.
1		0055	12	50.	1		0710	87	50.	1		1325	162	50.	1		1940	237	50.
1		0100	13	50.	1		0715	88	50.	1		1330	163	50.	1		1945	238	50.
1		0105	14	50.	1		0720	89	50.	1		1335	164	50.	1		1950	239	50.
1		0110	15	50.	1		0725	90	50.	1		1340	165	50.	1		1955	240	50.
1		0115	16	50.	1		0730	91	50.	1		1345	166	50.	1		2000	241	50.
1		0120	17	50.	1		0735	92	50.	1		1350	167	50.	1		2005	242	50.
1		0125	18	50.	1		0740	93	50.	1		1355	168	50.	1		2010	243	50.
1		0130	19	50.	1		0745	94	50.	1		1400	169	50.	1		2015	244	50.
1		0135	20	50.	1		0750	95	50.	1		1405	170	50.	1		2020	245	50.
1		0140	21	50.	1		0755	96	50.	1		1410	171	50.	1		2025	246	50.

1	0145	22	50.	*	1	0800	97	50.	*	1	1415	172	50.	*	1	2030	247	50.
1	0150	23	50.	*	1	0805	98	50.	*	1	1420	173	50.	*	1	2035	248	50.
1	0155	24	50.	*	1	0810	99	50.	*	1	1425	174	50.	*	1	2040	249	50.
1	0200	25	50.	*	1	0815	100	50.	*	1	1430	175	50.	*	1	2045	250	50.
1	0205	26	50.	*	1	0820	101	50.	*	1	1435	176	50.	*	1	2050	251	50.
1	0210	27	50.	*	1	0825	102	50.	*	1	1440	177	50.	*	1	2055	252	50.
1	0215	28	50.	*	1	0830	103	50.	*	1	1445	178	50.	*	1	2100	253	50.
1	0220	29	50.	*	1	0835	104	50.	*	1	1450	179	50.	*	1	2105	254	50.
1	0225	30	50.	*	1	0840	105	50.	*	1	1455	180	50.	*	1	2110	255	50.
1	0230	31	50.	*	1	0845	106	50.	*	1	1500	181	50.	*	1	2115	256	50.
1	0235	32	50.	*	1	0850	107	50.	*	1	1505	182	50.	*	1	2120	257	50.
1	0240	33	50.	*	1	0855	108	50.	*	1	1510	183	50.	*	1	2125	258	50.
1	0245	34	50.	*	1	0900	109	50.	*	1	1515	184	50.	*	1	2130	259	50.
1	0250	35	50.	*	1	0905	110	50.	*	1	1520	185	50.	*	1	2135	260	50.
1	0255	36	50.	*	1	0910	111	50.	*	1	1525	186	50.	*	1	2140	261	50.
1	0300	37	50.	*	1	0915	112	50.	*	1	1530	187	50.	*	1	2145	262	50.
1	0305	38	50.	*	1	0920	113	50.	*	1	1535	188	50.	*	1	2150	263	50.
1	0310	39	50.	*	1	0925	114	50.	*	1	1540	189	50.	*	1	2155	264	50.
1	0315	40	50.	*	1	0930	115	50.	*	1	1545	190	50.	*	1	2200	265	50.
1	0320	41	50.	*	1	0935	116	50.	*	1	1550	191	50.	*	1	2205	266	50.
1	0325	42	50.	*	1	0940	117	50.	*	1	1555	192	50.	*	1	2210	267	50.
1	0330	43	50.	*	1	0945	118	50.	*	1	1600	193	50.	*	1	2215	268	50.
1	0335	44	50.	*	1	0950	119	50.	*	1	1605	194	50.	*	1	2220	269	50.
1	0340	45	50.	*	1	0955	120	50.	*	1	1610	195	50.	*	1	2225	270	50.
1	0345	46	50.	*	1	1000	121	50.	*	1	1615	196	50.	*	1	2230	271	50.
1	0350	47	50.	*	1	1005	122	50.	*	1	1620	197	50.	*	1	2235	272	50.
1	0355	48	50.	*	1	1010	123	50.	*	1	1625	198	50.	*	1	2240	273	50.
1	0400	49	50.	*	1	1015	124	50.	*	1	1630	199	50.	*	1	2245	274	50.
1	0405	50	50.	*	1	1020	125	50.	*	1	1635	200	50.	*	1	2250	275	50.
1	0410	51	50.	*	1	1025	126	50.	*	1	1640	201	50.	*	1	2255	276	50.
1	0415	52	50.	*	1	1030	127	50.	*	1	1645	202	50.	*	1	2300	277	50.
1	0420	53	50.	*	1	1035	128	50.	*	1	1650	203	50.	*	1	2305	278	50.
1	0425	54	50.	*	1	1040	129	50.	*	1	1655	204	50.	*	1	2310	279	50.
1	0430	55	50.	*	1	1045	130	50.	*	1	1700	205	50.	*	1	2315	280	50.
1	0435	56	50.	*	1	1050	131	50.	*	1	1705	206	50.	*	1	2320	281	50.
1	0440	57	50.	*	1	1055	132	50.	*	1	1710	207	50.	*	1	2325	282	50.
1	0445	58	50.	*	1	1100	133	50.	*	1	1715	208	50.	*	1	2330	283	50.
1	0450	59	50.	*	1	1105	134	50.	*	1	1720	209	50.	*	1	2335	284	50.
1	0455	60	50.	*	1	1110	135	50.	*	1	1725	210	50.	*	1	2340	285	50.
1	0500	61	50.	*	1	1115	136	50.	*	1	1730	211	50.	*	1	2345	286	50.
1	0505	62	50.	*	1	1120	137	50.	*	1	1735	212	50.	*	1	2350	287	50.
1	0510	63	50.	*	1	1125	138	50.	*	1	1740	213	50.	*	1	2355	288	50.
1	0515	64	50.	*	1	1130	139	50.	*	1	1745	214	50.	*	2	0000	289	50.
1	0520	65	50.	*	1	1135	140	50.	*	1	1750	215	50.	*	2	0005	290	50.
1	0525	66	50.	*	1	1140	141	50.	*	1	1755	216	50.	*	2	0010	291	50.
1	0530	67	50.	*	1	1145	142	50.	*	1	1800	217	50.	*	2	0015	292	50.
1	0535	68	50.	*	1	1150	143	50.	*	1	1805	218	50.	*	2	0020	293	50.
1	0540	69	50.	*	1	1155	144	50.	*	1	1810	219	50.	*	2	0025	294	50.
1	0545	70	50.	*	1	1200	145	50.	*	1	1815	220	50.	*	2	0030	295	50.
1	0550	71	50.	*	1	1205	146	50.	*	1	1820	221	50.	*	2	0035	296	50.
1	0555	72	50.	*	1	1210	147	50.	*	1	1825	222	50.	*	2	0040	297	50.
1	0600	73	50.	*	1	1215	148	50.	*	1	1830	223	50.	*	2	0045	298	50.
1	0605	74	50.	*	1	1220	149	50.	*	1	1835	224	50.	*	2	0050	299	50.
1	0610	75	50.	*	1	1225	150	50.	*	1	1840	225	50.	*	2	0055	300	50.

****

PEAK FLOW	TIME		MAXIMUM AVERAGE FLOW			
			6-HR	24-HR	72-HR	24.92-HR
+ (CFS)	(HR)					
		(CFS)				
+ 50.	.50		50.	50.	49.	49.
		(INCHES)	.110	.441	.449	.449
		(AC-FT)	25.	99.	101.	101.

CUMULATIVE AREA = 4.22 SQ MI

1

RUNOFF SUMMARY
FLOW IN CUBIC FEET PER SECOND
TIME IN HOURS, AREA IN SQUARE MILES

	OPERATION	STATION	PEAK FLOW	TIME OF PEAK	AVERAGE FLOW FOR MAXIMUM PERIOD 6-HOUR	24-HOUR	72-HOUR	BASIN AREA	MAXIMUM STAGE	TIME OF MAX STAGE
+	HYDROGRAPH AT	SWSM1	2683.	12.25	454.	152.	147.	1.99		
+	ROUTED TO	RSWSM	2410.	12.42	454.	152.	146.	1.99		
+									1172.25	12.42
+	HYDROGRAPH AT	SWSM4	289.	12.33	47.	12.	11.	.34		
+	2 COMBINED AT	CSWSM	2694.	12.42	501.	163.	157.	2.33		
+	HYDROGRAPH AT	SWSM2	421.	12.25	65.	20.	19.	.44		
+	HYDROGRAPH AT	SWSM3	191.	12.42	30.	8.	7.	.28		
+	HYDROGRAPH AT	SWSM5	100.	12.25	18.	5.	4.	.09		
+	HYDROGRAPH AT	SWSM6	1044.	12.25	181.	58.	56.	.95		
+	HYDROGRAPH AT	SWSM7	150.	12.08	19.	6.	6.	.10		
+	HYDROGRAPH AT	SWSM8	43.	12.00	6.	2.	2.	.03		
+	7 COMBINED AT	CMBALL	4355.	12.33	819.	261.	251.	4.22		
+	ROUTED TO	BASIN	50.	.08	50.	50.	50.	4.22		
+									11.80	24.17
+	ROUTED TO	PUMP	50.	.50	50.	50.	49.	4.22		

1

SUMMARY OF KINEMATIC WAVE - MUSKINGUM-CUNGE ROUTING
(FLOW IS DIRECT RUNOFF WITHOUT BASE FLOW)

						INTERPOLATED TO COMPUTATION INTERVAL			
ISTAQ	ELEMENT	DT	PEAK	TIME TO PEAK	VOLUME	DT	PEAK	TIME TO PEAK	VOLUME
		(MIN)	(CFS)	(MIN)	(IN)	(MIN)	(CFS)	(MIN)	(IN)
PUMP	MANE	.83	50.00	25.82	.45	5.00	50.00	30.00	.45

CONTINUITY SUMMARY (AC-FT) - INFLOW= .1028E+03 EXCESS= .0000E+00 OUTFLOW= .1012E+03 BASIN STORAGE= .1762E+01 PERCENT ERROR= -.2

*** NORMAL END OF HEC-1 ***

Hvfut

Hidden Valley Storm Drain (Carver Wash to Estrella)
Worksheet for Circular Channel

Project Description	
Worksheet	Hidden Valley Storm
Flow Element	Circular Channel
Method	Manning's Formula
Solve For	Channel Depth

Input Data		
Mannings Coeffic	0.013	
Slope	004600	ft/ft
Diameter	36	in
Discharge	20.00	cfs

Results		
Depth	1.40	ft
Flow Area	3.2	ft²
Wetted Perime	4.51	ft
Top Width	2.99	ft
Critical Depth	1.44	ft
Percent Full	46.6	%
Critical Slope	0.004184	ft/ft
Velocity	6.20	ft/s
Velocity Head	0.60	ft
Specific Energ	1.99	ft
Froude Numbe	1.05	
Maximum Disc	48.66	cfs
Discharge Full	45.23	cfs
Slope Full	0.000899	ft/ft
Flow Type	Supercritical	

Hidden Valley Storm Drain (Carver Wash to Estrella)
Cross Section for Circular Channel

Project Description	
Worksheet	Hidden Valley Storm
Flow Element	Circular Channel
Method	Manning's Formula
Solve For	Channel Depth

Section Data		
Mannings Coeffic	0.013	
Slope	004600	ft/ft
Depth	1.40	ft
Diameter	36	in
Discharge	20.00	cfs

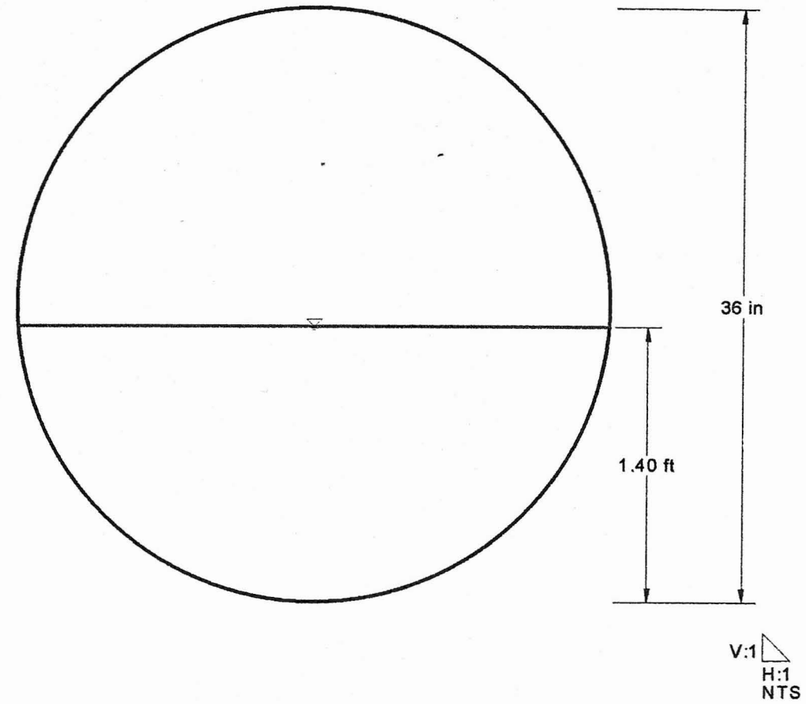

```
1*****************************************
 *                                       *
 *   FLOOD HYDROGRAPH PACKAGE  (HEC-1)   *
 *             JUN  1998                 *
 *          VERSION 4.1                  *
 *                                       *
 *  RUN DATE   27JUN01  TIME  11:36:43   *
 *                                       *
 *****************************************
```

```
*****************************************
*                                       *
*    U.S. ARMY CORPS OF ENGINEERS       *
*    HYDROLOGIC ENGINEERING CENTER      *
*         609 SECOND STREET             *
*       DAVIS, CALIFORNIA 95616         *
*           (916) 756-1104              *
*                                       *
*****************************************
```

```
X     X  XXXXXXX   XXXXX          X
X     X  X        X     X        XX
X     X  X        X              X
XXXXXXX  XXXX     X        XXXXX  X
X     X  X        X              X
X     X  X        X     X        X
X     X  XXXXXXX   XXXXX          XXX
```

THIS PROGRAM REPLACES ALL PREVIOUS VERSIONS OF HEC-1 KNOWN AS HEC1 (JAN 73), HEC1GS, HEC1DB, AND HEC1KW.

THE DEFINITIONS OF VARIABLES -RTIMP- AND -RTIOR- HAVE CHANGED FROM THOSE USED WITH THE 1973-STYLE INPUT STRUCTURE.
THE DEFINITION OF -AMSKK- ON RM-CARD WAS CHANGED WITH REVISIONS DATED 28 SEP 81. THIS IS THE FORTRAN77 VERSION
NEW OPTIONS: DAMBREAK OUTFLOW SUBMERGENCE , SINGLE EVENT DAMAGE CALCULATION, DSS:WRITE STAGE FREQUENCY,
DSS:READ TIME SERIES AT DESIRED CALCULATION INTERVAL LOSS RATE:GREEN AND AMPT INFILTRATION
KINEMATIC WAVE: NEW FINITE DIFFERENCE ALGORITHM

1 HEC-1 INPUT PAGE 1

```
LINE          ID.....1.....2.....3.....4.....5.....6.....7.....8.....9.....10
    1         ID    LAVEEN ADMS (FINAL HEC-1) 100-YR 24-HR STORM          CBA FILE # 40916-02-30
    2         ID    HIDDEN VALLEY WATERSHED/CHAMPION DRAIN WATERSHED
    3         ID    INPUT FILE NAME  HDNVLLY.DAT (FORMERLY CHAMPION24)     DATE: NOVEMBER 2000
    4         ID    FILE NAME CHANGED BY PROJECT ENGINEERING CONSULTANTS, LTD. FOR LAVEEN ADMP
    5         ID    24-HOUR SCS TYPE II RAINFALL
              *DIAGRAM
    6         IT      5                   300
    7         IO      3      0
    8         KK   WC16B
    9         KM   SUB-BASIN WC16B -LAND USE - NATURAL DESERT HILLSLOPES,MINOR DEVELOPMENT
   10         KM   24-HOUR TYPE II RAINFALL WAS USED TO FIND TC & R FOR THIS BASIN
   11         KM   THIS BASIN USED RAINFALL REDUCTION FACTOR OF .97
   12         BA    .023
   13         IN     30
   14         KM   RAINFALL DEPTH OF 4.20 WAS SPACIALLY REDUCED AS SHOWN ON THE PB RECORD
   15         PB   4.074
   16         KM   THE FOLLOWING PC RECORDS REPRESENT A 24-HR SCS TYPE II STORM
   17         PC    .000    .005    .011    .016    .022    .028    .035    .041    .048    .056
   18         PC    .068    .071    .080    .089    .098    .109    .120    .133    .147    .163
   19         PC    .181    .204    .235    .283    .663    .735    .772    .799    .820    .838
   20         PC    .854    .868    .880    .891    .902    .912    .921    .929    .937    .945
   21         PC    .952    .959    .965    .972    .978    .984    .989    .995   1.000
   22         LG    .150    .255   7.200    .123    .000
   23         UC    .233    .266
   24         UA      0       3       5       8      12      20      43      75      90      96
   25         UA    100
   26         KK   RRHV1
   27         KM   ROUTE FLOW FROM SUB-BASIN WC16B TO COMPUTATION POINT CPHV1
   28         RS      1    ELEV    1141
   29         RC  0.035   0.040   0.035     540   0.011    1146
   30         RX      0      25      80     120     140     170     240     310
   31         RY   1146    1144    1142    1141    1141    1142    1144    1146
   32         KK   WC17B
   33         KM   SUB-BASIN WC17B -LAND USE - DESERT MOUNTAIN,DESERT HILLS;MINOR DEVELOPMENT
   34         KM   24-HOUR TYPE II RAINFALL WAS USED TO FIND TC & R FOR THIS BASIN
   35         KM   THIS BASIN USED RAINFALL REDUCTION FACTOR OF .97
   36         BA    .035
   37         LG    .150    .276   4.050    .361   5.000
   38         UC    .267    .424
   39         UA      0       3       5       8      12      20      43      75      90      96
   40         UA    100
   41         KK   RRHV2
   42         KM   ROUTE FLOW FROM SUB-BASIN WC17B TP COMPUTATION POINT CPHV1
   43         RS      1    ELEV    1140
   44         RC  0.035   0.040   0.035     230   0.030    1142
   45         RX      0      40      80      90     100     110     150     190
   46         RY   1143    1142    1140    1140    1140    1140    1141    1142
```

1 HEC-1 INPUT PAGE 2

```
LINE          ID.....1.....2.....3.....4.....5.....6.....7.....8.....9.....10
   47         KK   CPHV1
   48         KM   COMBINE ROUTED FLOW FROM SUB-BASINS WC16B AND WC17B
```



```
LINE          ID.....1.....2.....3.....4.....5.....6.....7.....8.....9.....10
   49         HC      2
   50         KK   RRHV3
   51         KM   ROUTE FLOW FROM COMPUTATION POINT CPHV1 TO COMPUTATION POINT CPHV2 (1ST REACH)
   52         RS      1    ELEV    1137
   53         RC  0.035   0.040   0.035     400   0.010    1140
   54         RX      0      30      40      60      70     110     150     180
   55         RY   1141    1140    1138    1137    1137    1138    1139    1140
   56         KK   RRHV4
   57         KM   ROUTE FLOW FROM COMPUTATION POINT CPHV1 TO COMPUTATION POINT CPHV2 (2ND REACH)
   58         RS      1    ELEV    1141
   59         RC  0.035   0.040   0.035     400   0.010    1146
   60         RX      0      50     100     130     150     170     220     290
   61         RY   1146    1144    1142    1141    1141    1142    1144    1146
   62         KK   WC18B
   63         KM   SUB-BASIN WC18B -LAND USE - NATURAL DESERT HILLSLOPES,MINOR DEVELOPMENT
   64         KM   24-HOUR TYPE II RAINFALL WAS USED TO FIND TC & R FOR THIS BASIN
   65         KM   THIS BASIN USED RAINFALL REDUCTION FACTOR OF .97
   66         BA    .060
   67         LG    .150    .265   4.100    .236    .000
   68         UC    .300    .338
   69         UA      0       3       5       8      12      20      43      75      90      96
   70         UA    100
   71         KK   RRHV5
   72         KM   ROUTE FLOW FROM SUB-BASIN WC18B TO COMPUTATION POINT CPHV2
   73         RS      1    ELEV    1136
   74         RC  0.035   0.040   0.035     650   0.017    1140
   75         RX      0      60     120     140     160     190     220     240
   76         RY   1140    1139    1138    1136    1136    1138    1139    1140
   77         KK   WC19B
   78         KM   SUB-BASIN WC19B -LAND USE - DESERT MOUNTAIN,DESERT HILLS;MINOR DEVELOPMENT
   79         KM   24-HOUR TYPE II RAINFALL WAS USED TO FIND TC & R FOR THIS BASIN
   80         KM   THIS BASIN USED RAINFALL REDUCTION FACTOR OF .97
   81         BA    .210
   82         LG    .150    .276   3.520    .265  40.000
   83         UC    .217    .162
   84         UA      0       3       5       8      12      20      43      75      90      96
   85         UA    100
   86         KK   RRHV6
   87         KM   ROUTE FLOW FROM SUB-BASIN WC19B TO COMPUTATION POINT CPHV2
   88         RS      1    ELEV    1137
   89         RC  0.035   0.040   0.035     640   0.018    1139
   90         RX      0      10      30      45      60      75     110     140
   91         RY   1139  1138.5    1138    1137    1137    1138    1139    1140
```

1 HEC-1 INPUT PAGE 3

```
LINE          ID.....1.....2.....3.....4.....5.....6.....7.....8.....9.....10
   92         KK    PM3B
   93         KM   SUB-BASIN PM3B -LAND USE - NATURAL DESERT HILLSLOPES,MINOR DEVELOPMENT
   94         KM   24-HOUR TYPE II RAINFALL WAS USED TO FIND TC & R FOR THIS BASIN
   95         KM   THIS BASIN USED RAINFALL REDUCTION FACTOR OF .97
   96         BA    .060
   97         LG    .150    .345   3.100    .946   5.000
   98         UC    .283    .273
   99         UA      0       3       5       8      12      20      43      75      90      96
  100         UA    100
  101         KK   CPHV2
  102         KM   COMBINE ROUTED FLOW FROM CPHV1, WC18B, WC19B WITH RUNOFF FROM SUB-BASIN PM3B
  103         HC      4
  104         KK   RRHV7
  105         KM   ROUTE FLOW FROM COMPUTATION CPHV2 TO COMPUTATION POINT CPHV3
  106         RS      1    ELEV    1126
  107         RC  0.035   0.040   0.035     750   0.011    1130
  108         RX      0      40      90     160     190     210     250     390
  109         RY   1130    1129    1128    1126    1126    1128    1132    1133
  110         KK   WC20B
  111         KM   SUB-BASIN WC20B -LAND USE - NATURAL DESERT HILLSLOPES,MINOR DEVELOPMENT
  112         KM   24-HOUR TYPE II RAINFALL WAS USED TO FIND TC & R FOR THIS BASIN
  113         KM   THIS BASIN USED RAINFALL REDUCTION FACTOR OF .97
  114         BA    .014
  115         LG    .150    .250   8.600    .066    .000
  116         UC    .233    .259
  117         UA      0       3       5       8      12      20      43      75      90      96
  118         UA    100
  119         KK   RRHV8
  120         KM   ROUTE FLOW FROM SUB-BASIN WC20B TO COMPUTATION POINT CPHV3
  121         RS      1    ELEV    1132
  122         RC  0.035   0.035   0.035     850   0.022  1134.5
  123         RX      0      10      20      30      40      60     170     220
  124         RY  1134.5    1134    1133    1132    1132    1134    1134  1134.5
  125         KK   CPHV3
  126         KM   COMBINE ROUTED FLOWS FROM SUB-BASIN WC20B AND  COMPUTATION POINT CPHV3
  127         HC      2
```

```
128          KK   RRHV9
129          KM   ROUTE FLOW FROM COMPUTATION CPHV3 TO COMPUTATION POINT CPHV4
130          RS      1    ELEV    1121
131          RC  0.035   0.040   0.035     780   0.008    1126
132          RX      0     100     130     150     165     180     290     350
133          RY   1126    1124    1122    1121    1121    1122    1124    1126
1                                        HEC-1 INPUT                                    PAGE  4

        LINE         ID.......1.......2.......3.......4.......5.......6.......7.......8.......9......10


134          KK   WC21B
135          KM   SUB-BASIN WC21B -LAND USE - NATURAL DESERT HILLSLOPES,MINOR DEVELOPMENT
136          KM   24-HOUR TYPE II RAINFALL WAS USED TO FIND TC & R FOR THIS BASIN
137          KM   THIS BASIN USED RAINFALL REDUCTION FACTOR OF .97
138          BA    .024
139          LG    .150    .265   4.100    .236    .000
140          UC    .283    .382
141          UA       0       3       5       8      12      20      43      75      90      96
142          UA     100

143          KK  RRHV10
144          KM   ROUTE FLOW FROM SUB-BASIN WC21B TO COMPUTATION POINT CPHV4
145          RS       2    ELEV    1129
146          RC  0.035   0.035   0.035    1110   0.022    1130
147          RX       0      25      50      75     100     125     175     200
148          RY    1130 1129.75  1129.5    1129    1129  1129.5 1129.75    1130

149          KK    PM4B
150          KM   SUB-BASIN PM4B -LAND USE - NATURAL DESERT HILLSLOPES,MINOR DEVELOPMENT
151          KM   24-HOUR TYPE II RAINFALL WAS USED TO FIND TC & R FOR THIS BASIN
152          KM   THIS BASIN USED RAINFALL REDUCTION FACTOR OF .97
153          BA    .140
154          LG    .150    .327   3.450    .764  15.000
155          UC    .283    .188
156          UA       0       3       5       8      12      20      43      75      90      96
157          UA     100

158          KK   CPHV4
159          KM   COMBINE ROUTED FLOWS FROM SUB-BASINS WC21B PM4B AND  COMPUTATION POINT CPHV4
160          HC       3

161          KK  RRHV11
162          KM   ROUTE FLOW FROM COMPUTATION CPHV4 TO COMPUTATION POINT CPHV5
163          RS       1    ELEV    1116
164          RC  0.035   0.040   0.035     340   0.006    1121
165          RX       0     100     150     170     190     220     280     340
166          RY    1121    1120    1118    1116    1116    1118    1120    1121

167          KK   WC22B
168          KM   SUB-BASIN WC22B -LAND USE - NATURAL DESERT HILLSLOPES,MINOR DEVELOPMENT
169          KM   24-HOUR TYPE II RAINFALL WAS USED TO FIND TC & R FOR THIS BASIN
170          KM   THIS BASIN USED RAINFALL REDUCTION FACTOR OF .97
171          BA    .007
172          LG    .150    .260   5.800    .179    .000
173          UC    .217    .304
174          UA       0       3       5       8      12      20      43      75      90      96
175          UA     100

176          KK  RRHV12
177          KM   ROUTE FLOW FROM SUB-BASIN WC22B TO COMPUTATION POINT CPHV5
178          RS       3    ELEV  1123.5
179          RC  0.035   0.040   0.035    1020   0.023  1124.5
180          RX       0      30      70      90     100     120     135     160
181          RY  1124.5    1124  1123.5  1123.5  1123.5  1123.5    1124  1124.5
1                                        HEC-1 INPUT                                    PAGE  5

        LINE         ID.......1.......2.......3.......4.......5.......6.......7.......8.......9......10


182          KK   CPHV5
183          KM   COMBINE ROUTED FLOWS FROM SUB-BASIN WC22B AND  COMPUTATION POINT CPHV4
184          HC       2

185          KK  RRHV13
186          KM   ROUTE FLOW FROM COMPUTATION CPHV5 TO COMPUTATION POINT CPHV6
187          RS       1    ELEV    1114
188          RC  0.035   0.040   0.035     430   0.005    1116
189          RX       0      70     130     160     180     220     340     410
190          RY    1117    1116    1116    1114    1114    1115    1115    1116

191          KK   WC23B
192          KM   SUB-BASIN WC23B -LAND USE - DESERT MOUNTAIN,DESERT HILLS;MINOR DEVELOPMENT
193          KM   24-HOUR TYPE II RAINFALL WAS USED TO FIND TC & R FOR THIS BASIN
194          KM   THIS BASIN USED RAINFALL REDUCTION FACTOR OF .97
195          BA    .400
196          LG    .150    .300   4.120    .253  60.000
197          UC    .300    .247
198          UA       0       3       5       8      12      20      43      75      90      96
199          UA     100

200          KK  RRHV14
201          KM   ROUTE FLOW FROM SUB-BASIN WC23B AND TO COMPUTATION POINT CPHV6
202          RS       1    ELEV    1120
203          RC  0.035   0.035   0.035    1020   0.027  1122.5
204          RX       0      40      80     100     120     140     170     210
```



```
205          RY  1122.5    1122  1121.5    1120    1120  1121.5    1122  1122.5

206          KK   CPHV6
207          KM   COMBINE ROUTED FLOWS FROM SUB-BASIN WC23B AND  COMPUTATION POINT CPHV5
208          HC       2

209          KK  RRHV15
210          KM   ROUTE FLOW FROM COMPUTATION CPHV6 TO COMPUTATION POINT CPHV7
211          RS       2    ELEV    1105
212          RC  0.035   0.040   0.035    1980   0.008    1110
213          RX       0     170     430     470     490     530     580     630
214          RY    1110    1106    1106    1105    1105    1106    1108    1110

215          KK    PM5B
216          KM   SUB-BASIN PM5B -LAND USE - NATURAL DESERT HILLSLOPES,MINOR DEVELOPMENT
217          KM   24-HOUR TYPE II RAINFALL WAS USED TO FIND TC & R FOR THIS BASIN
218          KM   THIS BASIN USED RAINFALL REDUCTION FACTOR OF .97
219          BA    .130
220          LG    .150    .310   4.200    .518  15.000
221          UC    .433    .307
222          UA       0       3       5       8      12      20      43      75      90      96
223          UA     100
1                                        HEC-1 INPUT                                    PAGE  6

        LINE         ID.......1.......2.......3.......4.......5.......6.......7.......8.......9......10


224          KK   CPHV7
225          KM   COMBINE ROUTED FLOWS FROM SUB-BASIN PM5B AND  COMPUTATION POINT CPHV6
226          HC       2
             *
             *  ************Proposed Basin to Control Flows From Wash**********************
             *
             *

227          KK  HV7BSN
228          KM   ***************BASIN AT CARVER ROAD AND WASH*********************************
229          KM    DETENTION BASIN AT THIS SITE TO ATTENUATE FLOWS INTO THE HIDDEN VALLEY AREA
230          KM    THE BASIN HAS A 20 ACRE TOP AREA AND A 15.9 AC BOTTOM AREA AND 10 FEET DEEP
231          RS       1    ELEV       0
232          SA    15.9    16.7    17.5    18.3    19.1      20
233          SQ       0      20      20      20      20      20
234          SE       0       2       4       6       8      10
             *
             *

235          KK  RRHV16
236          KM   ROUTE OUTFLOW FROM BASIN IN STORM DRAIN TO 47TH AVE. AND ESTRELLA DRIVE
237          KM   THE FLOW DISCHARGES TO SRP DRAIN DITCH
238          RK    5200   .0046    .013            CIRC       3
             *
             * KM ROUTE FLOW FROM COMPUTATION CPHV7 TO COMPUTATION POINT CPHV8
             * RS       1    ELEV    1097
             * RC 0.065   0.065   0.065     400   0.008    1100
             * RX       0     210     315     430     540     640     800     930
             * RY  1100    1098    1098    1097    1097    1098    1099    1100
             *
             *
             *
             *

239          KK  A43A2B
240          KM   SUB-BASIN A43A2B -LAND USE - DESERT MOUNTAIN,DESERT HILLS;MINOR DEVELOPMENT
241          KM   24-HOUR TYPE II RAINFALL WAS USED TO FIND TC & R FOR THIS BASIN
242          KM   THIS BASIN USED RAINFALL REDUCTION FACTOR OF .97
243          BA    .090
244          LG    .150    .279   6.300    .174  30.000
245          UC    .317    .274
246          UA       0       3       5       8      12      20      43      75      90      96
247          UA     100

248          KK  RRHV17
249          KM   ROUTE FLOW FROM SUB-BASIN A43A2B TO COMPUTATION POINT CPHV8
250          RS       1    ELEV    1099
251          RC  0.065   0.065   0.065     440   0.015    1100
252          RX       0     105     135     165     190     210     260     320
253          RY    1100    1099    1099    1099    1099    1099    1099    1100
             *
             *
             *
             *  ************************ COMBINE SKIPPED*********************************
             *
             *
             *
             *  KK CHV8
             *  KM COMBINE ROUTED FLOWS FROM SUB-BASIN A43A2B AND  COMPUTATION POINT CPHV7
             *  HC     2
1                                        HEC-1 INPUT                                    PAGE  7

        LINE         ID.......1.......2.......3.......4.......5.......6.......7.......8.......9......10


254          KK  RRHV18
255          KM   ROUTE FLOW FROM COMPUTATION CPHV8 TO COMPUTATION POINT CPHV10
256          RS       3    ELEV    1086
```

```
 257          RC   0.065   0.065   0.065    2200   0.008    1088
 258          RX      0      80     200     300     360     440     550     610
 259          RY   1088    1086    1086    1086    1086    1086    1086    1088

 260          KK  NWSM1B
 261          KM   SUB-BASIN NWSM1B -LAND USE - DESERT MOUNTAIN;UNDEVELOPED
 262          KM   24-HOUR TYPE II RAINFALL WAS USED TO FIND TC & R FOR THIS BASIN
 263          KM   THIS BASIN USED RAINFALL REDUCTION FACTOR OF .97
 264          BA    .130
 265          LG    .150    .345   2.500   1.143  60.000
 266          UC    .267    .226
 267          UA       0       3       5       8      12      20      43      75      90      96
 268          UA     100

 269          KK  RR43B1
 270          KM   ROUTE FLOW FROM SUB-BASIN NWSM1B TO COMPUTATION POINT CPHV9 (1ST REACH)
 271          RS       1    ELEV    1168
 272          RC   0.035   0.040   0.035    1850   0.47    1172
 273          RX       0      40     100     120     135     150     190     240
 274          RY    1172  1171.5    1170    1168    1168    1170  1171.5    1172

 275          KK  RR43B2
 276          KM   ROUTE FLOW FROM SUB-BASIN NWSM1B TO COMPUTATION POINT CPHV9 ( 2ND REACH )
 277          RS       2    ELEV    1118
 278          RC   0.035   0.040   0.035    1000   0.034    1120
 279          RX       0      50     110     410     580     850     970    1160
 280          RY    1120    1119    1119    1118    1118    1118    1119    1120

 281          KK  A43A1B
 282          KM   SUB-BASIN A43A1B -LAND USE - DESERT MOUNTAINS,DESERT HILLS;MINOR DEVELOPMENT
 283          KM   24-HOUR TYPE II RAINFALL WAS USED TO FIND TC & R FOR THIS BASIN
 284          KM   THIS BASIN USED RAINFALL REDUCTION FACTOR OF .97
 285          BA    .170
 286          LG    .150    .285   4.100    .463  15.000
 287          UC    .283    .151
 288          UA       0       3       5       8      12      20      43      75      90      96
 289          UA     100

 290          KK   CPHV9
 291          KM   COMBINE ROUTED FLOW FROM SUB-BASIN NWSM1B WITH RUNOFF FROM SUB-BASIN A43A1B
 292          HC       2

 293          KK  RRHV19
 294          KM   ROUTE FLOW FROM COMPUTATION CPHV9 TO COMPUTATION POINT CPHV10
 295          RS       5    ELEV    1091
 296          RC   0.065   0.065   0.065    1700   0.014    1092
 297          RX       0      60     450     530     610     690     830     960
```



```
LINE          ID.......1.......2.......3.......4.......5.......6.......7.......8.......9......10

 298          RY    1092    1091    1091    1091    1091    1091    1091    1092

 299          KK  CPHV10
 300          KM   COMBINE ROUTED FLOWS FROM COMPUTATION POINTS CPHV8 AND CPHV9
 301          HC       2

 302          KK  RRHV20
 303          KM       ROUTE FLOW FROM COMPUTATION CPHV10 TO COMPUTATION POINT CPHV11
 304          RS       2    ELEV  1074.5
 305          RC   0.065   0.065   0.065    1100  0.0085    1078
 306          RX       0      90     480     510     520     530     870    1300
 307          RY    1078    1076  1074.5  1074.5  1074.5  1074.5    1076    1078

 308          KK   ED47B
 309          KM   SUB-BASIN ED47B -LAND USE - AGRICULTURE,DESERT MOUNTAIN,DESERT HILLS;MODERATE
 310          KM   DEVELOPMENT
 311          KM   24-HOUR TYPE II RAINFALL WAS USED TO FIND TC & R FOR THIS BASIN
 312          KM   THIS BASIN USED RAINFALL REDUCTION FACTOR OF .97
 313          BA    .810
 314          LG    .330    .094   4.100    .629  10.000
 315          UC    .283    .114
 316          UA       0       3       5       8      12      20      43      75      90      96
 317          UA     100

 318          KK   CPHV11
 319          KM   COMBINE ROUTED FLOWS FROM COMPUTATION POINT CPHV10 TO RUNOFF FROM SUB-BASIN
 320          KM   ED47B
 321          HC       3

 322          KK  DFED47
 323          KM   RATE CHANNEL CROSSECTION AT COMPUTATION POINT ED47B FOR SPLIT FLOW
 324          KM   DIVERTED FLOW IS ROUTED THROUGH SUB BASIN IR55B
 325          DT  DIR55B
 326          DI       0     139     558    1324    2507
 327          DQ       0      20     126     372     801

 328          KK  RRHV21
 329          KM   ROUTE FLOW FROM COMPUTATION POINT CPHV11 TO COMPUTATION POINT CPHV12
 330          KM   (1ST REACH)
 331          RS       5    ELEV  1059.5
 332          RC   0.015   0.065   0.065    2660   0.006  1060.7
 333          RX       0      30      60     150     180     600     660     690
 334          RY  1060.7  1060.0    1060    1060  1059.5  1059.5    1060  1060.7

 335          KK  RRHV22
```



```
 336          KM   ROUTE FLOW FROM COMPUTATION POINT CPHV11 TO COMPUTATION POINT CPHV12
 337          KM    (2ND REACH)
 338          RS       7    ELEV  1039.5
 339          RC     .07     .07     .07    2724   0.007  1040.1
 340          RX       0     230     700     701    1260    1261    1480    1520
 341          RY  1040.1    1039  1039.5  1039.5  1039.5  1039.5    1040  1040.1
```



```
LINE          ID.......1.......2.......3.......4.......5.......6.......7.......8.......9......10

 342          KK   IR59B
 343          KM   SUB-BASIN IR59B -LAND USE - AGRICULTURE; MINOR DEVELOPMENT
 344          KM   24-HOUR TYPE II RAINFALL WAS USED TO FIND TC & R FOR THIS BASIN
 345          KM   THIS BASIN USED RAINFALL REDUCTION FACTOR OF .97
 346          BA    .660
 347          LG    .500    .000   3.990    .636    .000
 348          UC    .883    .610
 349          UA       0     1.6       5    10.6    19.5      32      44      56      70      82
 350          UA     100

 351          KK  CPHV12
 352          KM    COMBINE ROUTED FLOW FROM COMPUTATION POINT CPHV11 TO RUNOFF FROM SUB-BASIN
 353          KM    IR59B
 354          HC       2

 355          KK  DIHV12
 356          KM    THE WESTERN EDGE OF SUB-BASIN IR59B WHICH IS ALSO THE WESTERN EDGE OF THE
 357          KM    STUDY AREA IS BOUNDED  BY A CONCRETE IRRIGATION CANAL AND EARTHEN ROADWAY
 358          KM    THE EARTHEN ROADWAY HAS A CAPACITY TO CONVEY  APPROXIMATELY 65 CFS TO THE
 359          KM    NORTH WEST BEFORE THE CONCRETE IRRIGATION CANAL IS OVERTOPPED AND FLOW
 360          KM    CONTINUES TO DRAIN TO THE WEST. THEREFORE APPROXIMATELY 65 CFS WILL
 361          KM    CONCENTRATE AT COMPUTATION POINT CPHV12. AT COMPUTATION POINT CPHV12
 362          KM    A DIP SECTION IN THE EARTHEN ROADWAY WILL DRAIN APPROXIMATELY 684 CFS
 363          KM    TO THE WEST. ALL OF THE FLOW CONCENTRATED AT COMPUTATION CPHV12 PASSES
 364          KM    OUT OF THE STUDY AREA.
 365          DT  RCHV12
 366          DI       0     100     200     400     600     800     900    1000    1200    1400
 367          DQ       0     100     200     400     600     800     900    1000    1200    1400

 368          KK  REED47
 369          KM   RETRIVE DIVERTED FLOW FROM COMPUTATION POINT CPHV11
 370          DR  DIR55B

 371          KK  RRHV23
 372          KM   ROUTE DIVERTED FLOW FROM COMPUTATION POINT CPHV11 THROUGH SUB-BASIN IR55B
 373          RS      19    ELEV    1061
 374          RC    0.07    0.07    0.07    4800   0.006
 375          RX       0     240     470     620     830    1200    1520    1740
 376          RY    1062    1061    1061    1061    1061    1061    1061    1062

 377          KK   IR55B
 378          KM   SUB-BASIN IR55B -LAND USE - AGRICULTURE;MINOR DEVELOPMENT
 379          KM   24-HOUR TYPE II RAINFALL WAS USED TO FIND TC & R FOR THIS BASIN
 380          KM   THIS BASIN USED RAINFALL REDUCTION FACTOR OF .97
 381          BA    .530
 382          LG    .480    .079   3.650    .502   5.000
 383          UC    .850    .554
 384          UA       0       3       5       8      12      20      43      75      90      96
 385          UA     100
```



```
LINE          ID.......1.......2.......3.......4.......5.......6.......7.......8.......9......10

 386          KK  CIR55B
 387          KM    COMBINE ROUTED DIVERTED FLOW FROM COMPUTATION POINT CPHV11 WITH RUNOFF FROM
 388          KM    SUB-BASIN IR55B
 389          HC       2

 390          KK  DIR55B
 391          KM    THE WESTERN EDGE OF SUB-BASIN IR55B WHICH IS ALSO THE WESTERN EDGE OF THE
 392          KM    STUDY AREA IS BOUNDED BY AN EARTHEN IRRIGATION CANAL. MINOR CONTAINMENT OF
 393          KM    RUNOFF AND ROUTED FLOW WILL BE REALIZED. THEREFORE TOTAL FLOW AT COMPUTATION
 394          KM    POINT CIR55B IS DIVERTED BECAUSE FLOW FROM THIS POINT DOES NOT CONTRIBUTE
 395          KM    TO RUNOFF COMPUTATIONS DOWNSTREAM.
 396          DT  RCIREB
 397          DI       0     100     200     400     600     800
 398          DQ       0     100     200     400     600     800
 399          ZZ
```

1

SCHEMATIC DIAGRAM OF STREAM NETWORK

INPUT LINE NO.

(V) ROUTING (---->) DIVERSION OR PUMP FLOW

(.) CONNECTOR (<----) RETURN OF DIVERTED OR PUMPED FLOW

```
  8      WC16B
          V
          V
 26      RRHV1
          .
          .
 32       .       WC17B
          .         V
          .         V
 41       .       RRHV2
          .         .
          .         .
 47      CPHV1.............
          V
          V
 50      RRHV3
          V
          V
 56      RRHV4
          .
          .
 62       .       WC18B
          .         V
          .         V
 71       .       RRHV5
          .         .
          .         .
 77       .         .       WC19B
          .         .         V
          .         .         V
 86       .         .       RRHV6
          .         .         .
          .         .         .
 92       .         .         .       PM3B
          .         .         .         .
          .         .         .         .
101      CPHV2.....................................
          V
          V
104      RRHV7
          .
          .
110       .       WC20B
          .         V
          .         V
119       .       RRHV8
          .         .
          .         .
125      CPHV3.............
          V
          V
128      RRHV9
          .
          .
134       .       WC21B
          .         V
          .         V
143       .       RRHV10
          .         .
          .         .
149       .         .       PM4B
          .         .         .
          .         .         .
158      CPHV4.........................
          V
          V
161      RRHV11
          .
          .
167       .       WC22B
          .         V
          .         V
176       .       RRHV12
          .         .
          .         .
182      CPHV5.............
          V
          V
185      RRHV13
          .
          .
191       .       WC23B
          .         V
          .         V
200       .       RRHV14
          .         .
          .         .
206      CPHV6.............
          V
```



```
          V
209      RRHV15
          .
          .
215       .       PM5B
          .         .
          .         .
224      CPHV7.............
          V
          V
227      HV7BSN
          V
          V
235      RRHV16
          .
          .
239       .       A43A2B
          .         V
          .         V
248       .       RRHV17
          .         V
          .         V
254       .       RRHV18
          .         .
          .         .
260       .         .       NWSM1B
          .         .         V
          .         .         V
269       .         .       RR43B1
          .         .         V
          .         .         V
275       .         .       RR43B2
          .         .         .
          .         .         .
281       .         .         .       A43A1B
          .         .         .         .
          .         .         .         .
290       .         .       CPHV9.............
          .         .         V
          .         .         V
293       .         .       RRHV19
          .         .         .
          .         .         .
299       .       CPHV10............
          .         V
          .         V
302       .       RRHV20
          .         .
          .         .
308       .         .       ED47B
          .         .         .
          .         .         .
318      CPHV11........................
          .
          .
325       .-------->  DIR55B
322      DFED47
          V
          V
328      RRHV21
          V
          V
335      RRHV22
          .
          .
342       .       IR59B
          .         .
          .         .
351      CPHV12............
          .
          .
365       .-------->  RCHV12
355      DIHV12
          .
          .
370       .           .<-------  DIR55B
368       .       REED47
          .           V
          .           V
371       .       RRHV23
          .           .
          .           .
377       .           .       IR55B
          .           .         .
          .           .         .
386       .       CIR55B............
          .           .
          .           .
396       .           .-------->  RCIREB
390       .       DIR55B
```

(***) RUNOFF ALSO COMPUTED AT THIS LOCATION

```
1*****************************************
*                                       *
*   FLOOD HYDROGRAPH PACKAGE  (HEC-1)   *
*             JUN  1998                 *
*           VERSION 4.1                 *
*                                       *
* RUN DATE   27JUN01  TIME  11:36:43    *
*                                       *
*****************************************
```

```
*****************************************
*                                       *
*   U.S. ARMY CORPS OF ENGINEERS        *
*   HYDROLOGIC ENGINEERING CENTER       *
*        609 SECOND STREET              *
*      DAVIS, CALIFORNIA 95616          *
*         (916) 756-1104                *
*                                       *
*****************************************
```

LAVEEN ADMS (FINAL HEC-1) 100-YR 24-HR STORM CBA FILE # 40916-02-30
HIDDEN VALLEY WATERSHED/CHAMPION DRAIN WATERSHED
INPUT FILE NAME HDNVLLY.DAT (FORMERLY CHAMPION24) DATE: NOVEMBER 2000
FILE NAME CHANGED BY PROJECT ENGINEERING CONSULTANTS, LTD. FOR LAVEEN ADMP
24-HOUR SCS TYPE II RAINFALL

```
 7 IO        OUTPUT CONTROL VARIABLES
                 IPRNT          3  PRINT CONTROL
                 IPLOT          0  PLOT CONTROL
                 QSCAL          0.  HYDROGRAPH PLOT SCALE

   IT        HYDROGRAPH TIME DATA
                 NMIN           5  MINUTES IN COMPUTATION INTERVAL
                IDATE      1    0  STARTING DATE
                ITIME         0000  STARTING TIME
                   NQ          300  NUMBER OF HYDROGRAPH ORDINATES
               NDDATE      2    0  ENDING DATE
               NDTIME         0055  ENDING TIME
               ICENT           19  CENTURY MARK

             COMPUTATION INTERVAL      .08 HOURS
                 TOTAL TIME BASE   24.92 HOURS

      ENGLISH UNITS
           DRAINAGE AREA         SQUARE MILES
           PRECIPITATION DEPTH   INCHES
           LENGTH, ELEVATION     FEET
           FLOW                  CUBIC FEET PER SECOND
           STORAGE VOLUME        ACRE-FEET
           SURFACE AREA          ACRES
           TEMPERATURE           DEGREES FAHRENHEIT
```

*** ***

```
         **************
         *            *
 8 KK    *    WC16B   *
         *            *
         **************
```

SUB-BASIN WC16B -LAND USE - NATURAL DESERT HILLSLOPES,MINOR DEVELOPMENT
24-HOUR TYPE II RAINFALL WAS USED TO FIND TC & R FOR THIS BASIN
THIS BASIN USED RAINFALL REDUCTION FACTOR OF .97
RAINFALL DEPTH OF 4.20 WAS SPACIALLY REDUCED AS SHOWN ON THE PB RECORD
THE FOLLOWING PC RECORDS REPRESENT A 24-HR SCS TYPE II STORM

```
13 IN        TIME DATA FOR INPUT TIME SERIES
                JXMIN          30  TIME INTERVAL IN MINUTES
               JXDATE      1    0  STARTING DATE
               JXTIME          0  STARTING TIME

          SUBBASIN RUNOFF DATA

12 BA       SUBBASIN CHARACTERISTICS
               TAREA        .02  SUBBASIN AREA

          PRECIPITATION DATA

16 PB            STORM      4.07  BASIN TOTAL PRECIPITATION

16 PI         INCREMENTAL PRECIPITATION PATTERN
               .00   .00   .00   .00   .00   .00   .00   .00   .00   .00
               .00   .00   .00   .00   .00   .00   .00   .00   .00   .00
               .00   .00   .00   .00   .00   .00   .00   .00   .00   .00
               .00   .00   .00   .00   .00   .00   .00   .00   .00   .00
               .00   .00   .00   .00   .00   .00   .00   .00   .00   .00
               .00   .00   .00   .00   .00   .00   .00   .00   .00   .00
               .00   .00   .00   .00   .00   .00   .00   .00   .00   .00
               .00   .00   .00   .00   .00   .00   .00   .00   .00   .00
               .00   .00   .00   .00   .00   .00   .00   .00   .00   .00
               .00   .00   .00   .00   .00   .00   .00   .00   .00   .00
               .00   .00   .00   .00   .00   .00   .00   .00   .00   .00
               .00   .00   .00   .00   .00   .00   .00   .00   .00   .00
               .00   .00   .00   .00   .00   .00   .01   .01   .01   .01
               .01   .01   .01   .01   .01   .01   .01   .01   .06   .06
               .06   .06   .06   .06   .01   .01   .01   .01   .01   .01
               .01   .01   .01   .01   .01   .01   .00   .00   .00   .00
               .00   .00   .00   .00   .00   .00   .00   .00   .00   .00
               .00   .00   .00   .00   .00   .00   .00   .00   .00   .00
               .00   .00   .00   .00   .00   .00   .00   .00   .00   .00
```



```
               .00   .00   .00   .00   .00   .00   .00   .00   .00   .00
               .00   .00   .00   .00   .00   .00   .00   .00   .00   .00
               .00   .00   .00   .00   .00   .00   .00   .00   .00   .00
               .00   .00   .00   .00   .00   .00   .00   .00   .00   .00
               .00   .00   .00   .00   .00   .00   .00   .00   .00   .00
               .00   .00   .00   .00   .00   .00   .00   .00   .00   .00
               .00   .00   .00   .00   .00   .00   .00   .00   .00   .00
               .00   .00   .00   .00   .00   .00   .00   .00   .00   .00
               .00   .00   .00   .00   .00   .00   .00   .00   .00   .00

 22 LG       GREEN AND AMPT LOSS RATE
                  STRTL        .15  STARTING LOSS
                    DTH        .25  MOISTURE DEFICIT
                   PSIF       7.20  WETTING FRONT SUCTION
                  XKSAT        .12  HYDRAULIC CONDUCTIVITY
                  RTIMP        .00  PERCENT IMPERVIOUS AREA

 23 UC       CLARK UNITGRAPH
                     TC        .23  TIME OF CONCENTRATION
                      R        .27  STORAGE COEFFICIENT

 24 UA       ACCUMULATED-AREA VS. TIME,  11 ORDINATES
                    .0     3.0     5.0     8.0    12.0    20.0    43.0    75.0    90.0    96.0
                 100.0
```

***

UNIT HYDROGRAPH PARAMETERS
CLARK TC= .23 HR, R= .27 HR
SNYDER TP= .23 HR, CP= .59

UNIT HYDROGRAPH
19 END-OF-PERIOD ORDINATES

```
          2.     20.     37.     32.     23.     17.     12.      9.      7.      5.
          4.      3.      2.      1.      1.      1.      1.      0.      0.
```

*** *** *** *** ***

HYDROGRAPH AT STATION WC16B

TOTAL RAINFALL = 4.07, TOTAL LOSS = 2.54, TOTAL EXCESS = 1.54

```
                                        MAXIMUM AVERAGE FLOW
PEAK FLOW     TIME          6-HR       24-HR       72-HR      24.92-HR
+   (CFS)     (HR)
                (CFS)
+     33.    12.08            4.          1.          1.          1.
          (INCHES)        1.532       1.532       1.532       1.532
          (AC-FT)            2.          2.          2.          2.
```

CUMULATIVE AREA = .02 SQ MI

*** ***

```
         **************
         *            *
26 KK    *    RRHV1   *
         *            *
         **************
```

ROUTE FLOW FROM SUB-BASIN WC16B TO COMPUTATION POINT CPHV1

```
      HYDROGRAPH ROUTING DATA

28 RS       STORAGE ROUTING
               NSTPS          1  NUMBER OF SUBREACHES
                ITYP       ELEV  TYPE OF INITIAL CONDITION
              RSVRIC    1141.00  INITIAL CONDITION
                   X        .00 WORKING R AND D COEFFICIENT

29 RC       NORMAL DEPTH CHANNEL
                 ANL        .035  LEFT OVERBANK N-VALUE
                ANCH        .040  MAIN CHANNEL N-VALUE
                 ANR        .035  RIGHT OVERBANK N-VALUE
               RLNTH        540.  REACH LENGTH
                 SEL       .0110  ENERGY SLOPE
               ELMAX     1146.0  MAX. ELEV. FOR STORAGE/OUTFLOW CALCULATION

                              CROSS-SECTION DATA
                  --- LEFT OVERBANK --- + ------ MAIN CHANNEL ------- + --- RIGHT OVERBANK ---
31 RY     ELEVATION  1146.00  1144.00  1142.00  1141.00  1141.00  1142.00  1144.00  1146.00
30 RX     DISTANCE       .00    25.00    80.00   120.00   140.00   170.00   240.00   310.00

                                        ***

                              COMPUTED STORAGE-OUTFLOW-ELEVATION DATA

          STORAGE        .00      .10      .25      .47      .74     1.07     1.46     1.90     2.39     2.93
          OUTFLOW        .00    10.27    39.67    92.50   177.62   313.90   490.38   711.16   979.93  1300.20
        ELEVATION    1141.00  1141.26  1141.53  1141.79  1142.05  1142.32  1142.58  1142.84  1143.11  1143.37

          STORAGE       3.53     4.19     4.89     5.64     6.43     7.25     8.12     9.03     9.98    10.97
```

```
          OUTFLOW    1675.36   2108.67   2610.08   3178.47   3810.58   4508.01   5272.46   6105.65   7009.32   7985.47
        ELEVATION    1143.63   1143.90   1144.16   1144.42   1144.68   1144.95   1145.21   1145.47   1145.74   1146.00

*** WARNING *** MODIFIED PULS ROUTING MAY BE NUMERICALLY UNSTABLE FOR OUTFLOWS BETWEEN        93. TO      7985.
                THE ROUTED HYDROGRAPH SHOULD BE EXAMINED FOR OSCILLATIONS OR OUTFLOWS GREATER THAN PEAK INFLOWS.
                THIS CAN BE CORRECTED BY DECREASING THE TIME INTERVAL OR INCREASING STORAGE (USE A LONGER REACH.)

      ***              ***              ***              ***              ***

                     HYDROGRAPH AT STATION     RRHV1

  PEAK FLOW      TIME                             MAXIMUM AVERAGE FLOW
                                      6-HR         24-HR         72-HR       24.92-HR
+   (CFS)        (HR)
                            (CFS)
+      32.       12.17                  4.            1.            1.            1.
                          (INCHES)   1.532         1.532         1.532         1.532
                           (AC-FT)      2.            2.            2.            2.

 PEAK STORAGE    TIME                           MAXIMUM AVERAGE STORAGE
                                      6-HR         24-HR         72-HR       24.92-HR
+  (AC-FT)       (HR)
        0.       12.17                  0.            0.            0.            0.

  PEAK STAGE     TIME                             MAXIMUM AVERAGE STAGE
                                      6-HR         24-HR         72-HR       24.92-HR
+   (FEET)       (HR)
   1141.45       12.17             1141.07       1141.02       1141.02       1141.02

                          CUMULATIVE AREA =        .02 SQ MI


*** *** *** *** *** *** *** *** *** *** *** *** *** *** *** *** *** *** *** *** *** *** *** *** *** *** *** *** *** *** *** *** ***


              **************
              *            *
   32 KK      *    WC17B   *
              *            *
              **************
                           SUB-BASIN WC17B -LAND USE - DESERT MOUNTAIN,DESERT HILLS;MINOR DEVELOPMENT
                           24-HOUR TYPE II RAINFALL WAS USED TO FIND TC & R FOR THIS BASIN
                           THIS BASIN USED RAINFALL REDUCTION FACTOR OF .97

            SUBBASIN RUNOFF DATA

   36 BA      SUBBASIN CHARACTERISTICS
                    TAREA          .04  SUBBASIN AREA

              PRECIPITATION DATA

   16 PB            STORM         4.07  BASIN TOTAL PRECIPITATION

   16 PI        INCREMENTAL PRECIPITATION PATTERN
                    .00       .00       .00       .00       .00       .00       .00       .00       .00       .00
                    .00       .00       .00       .00       .00       .00       .00       .00       .00       .00
                    .00       .00       .00       .00       .00       .00       .00       .00       .00       .00
                    .00       .00       .00       .00       .00       .00       .00       .00       .00       .00
                    .00       .00       .00       .00       .00       .00       .00       .00       .00       .00
                    .00       .00       .00       .00       .00       .00       .00       .00       .00       .00
                    .00       .00       .00       .00       .00       .00       .00       .00       .00       .00
                    .00       .00       .00       .00       .00       .00       .00       .00       .00       .00
                    .00       .00       .00       .00       .00       .00       .00       .00       .00       .00
                    .00       .00       .00       .00       .00       .00       .00       .00       .00       .00
                    .00       .00       .00       .00       .00       .00       .00       .00       .00       .00
                    .00       .00       .00       .00       .00       .00       .00       .00       .00       .00
                    .00       .00       .00       .00       .00       .00       .01       .01       .01       .01
                    .01       .01       .01       .01       .01       .01       .01       .01       .06       .06
                    .06       .06       .06       .06       .01       .01       .01       .01       .01       .01
                    .01       .01       .01       .01       .01       .01       .00       .00       .00       .00
                    .00       .00       .00       .00       .00       .00       .00       .00       .00       .00
                    .00       .00       .00       .00       .00       .00       .00       .00       .00       .00
                    .00       .00       .00       .00       .00       .00       .00       .00       .00       .00
                    .00       .00       .00       .00       .00       .00       .00       .00       .00       .00
                    .00       .00       .00       .00       .00       .00       .00       .00       .00       .00
                    .00       .00       .00       .00       .00       .00       .00       .00       .00       .00
                    .00       .00       .00       .00       .00       .00       .00       .00       .00       .00
                    .00       .00       .00       .00       .00       .00       .00       .00       .00       .00
                    .00       .00       .00       .00       .00       .00       .00       .00       .00       .00
                    .00       .00       .00       .00       .00       .00       .00       .00       .00       .00
                    .00       .00       .00       .00       .00       .00       .00       .00       .00       .00
                    .00       .00       .00       .00       .00       .00       .00       .00       .00       .00
                    .00       .00       .00       .00       .00       .00       .00       .00

   37 LG      GREEN AND AMPT LOSS RATE
                   STRTL           .15  STARTING LOSS
                     DTH           .28  MOISTURE DEFICIT
                    PSIF          4.05  WETTING FRONT SUCTION
                  XKSAT            .36  HYDRAULIC CONDUCTIVITY
                   RTIMP          5.00  PERCENT IMPERVIOUS AREA

   38 UC      CLARK UNITGRAPH
                      TC           .27  TIME OF CONCENTRATION
```



```
                       R           .42  STORAGE COEFFICIENT

   39 UA            ACCUMULATED-AREA VS. TIME,  11 ORDINATES
                          .0       3.0       5.0       8.0      12.0      20.0      43.0      75.0      90.0      96.0
                       100.0

                                                         ***

                                              UNIT HYDROGRAPH PARAMETERS
                                         CLARK    TC=    .27 HR,        R=   .42 HR
                                        SNYDER    TP=    .28 HR,       CP=   .50

                                                   UNIT HYDROGRAPH
                                              29 END-OF-PERIOD ORDINATES
                        2.       14.       33.       39.       33.       27.       22.       18.       15.       12.
                       10.        8.        7.        6.        5.        4.        3.        3.        2.        2.
                        1.        1.        1.        1.        1.        1.        0.        0.        0.

       ***              ***              ***              ***              ***

                        HYDROGRAPH AT STATION     WC17B

    TOTAL RAINFALL =     4.07, TOTAL LOSS =     2.73, TOTAL EXCESS =     1.34

  PEAK FLOW      TIME                             MAXIMUM AVERAGE FLOW
                                      6-HR         24-HR         72-HR       24.92-HR
+   (CFS)        (HR)
                            (CFS)
+      35.       12.17                  5.            1.            1.            1.
                          (INCHES)   1.274         1.333         1.333         1.333
                           (AC-FT)      2.            2.            2.            2.

                          CUMULATIVE AREA =        .04 SQ MI


*** *** *** *** *** *** *** *** *** *** *** *** *** *** *** *** *** *** *** *** *** *** *** *** *** *** *** *** *** *** *** *** ***


              **************
              *            *
   41 KK      *    RRHV2   *
              *            *
              **************
                           ROUTE FLOW FROM SUB-BASIN WC17B TP COMPUTATION POINT CPHV1

            HYDROGRAPH ROUTING DATA

   43 RS      STORAGE ROUTING
                   NSTPS             1  NUMBER OF SUBREACHES
                    ITYP          ELEV  TYPE OF INITIAL CONDITION
                  RSVRIC       1140.00  INITIAL CONDITION
                       X           .00  WORKING R AND D COEFFICIENT

   44 RC      NORMAL DEPTH CHANNEL
                     ANL          .035  LEFT OVERBANK N-VALUE
                    ANCH          .040  MAIN CHANNEL N-VALUE
                     ANR          .035  RIGHT OVERBANK N-VALUE
                   RLNTH          230.  REACH LENGTH
                     SEL         .0300  ENERGY SLOPE
                   ELMAX        1142.0  MAX. ELEV. FOR STORAGE/OUTFLOW CALCULATION

                                        CROSS-SECTION DATA
                     --- LEFT OVERBANK --- + ------ MAIN CHANNEL ------- + --- RIGHT OVERBANK ---
   46 RY    ELEVATION   1143.00   1142.00   1140.00   1140.00   1140.00   1140.00   1141.00   1142.00
   45 RX     DISTANCE       .00     40.00     80.00     90.00    100.00    110.00    150.00    190.00

                                                         ***

                                     COMPUTED STORAGE-OUTFLOW-ELEVATION DATA

          STORAGE       .00       .02       .04       .07       .09       .13       .16       .20       .25       .29
          OUTFLOW       .00      4.88     16.59     34.76     59.61     91.50    130.80    177.92    233.26    297.24
        ELEVATION   1140.00   1140.11   1140.21   1140.32   1140.42   1140.53   1140.63   1140.74   1140.84   1140.95

          STORAGE       .34       .40       .45       .51       .58       .64       .72       .79       .87       .95
          OUTFLOW    370.26    452.71    544.98    647.46    760.53    884.57   1019.95   1167.03   1326.17   1497.73
        ELEVATION   1141.05   1141.16   1141.26   1141.37   1141.47   1141.58   1141.68   1141.79   1141.89   1142.00

*** WARNING *** MODIFIED PULS ROUTING MAY BE NUMERICALLY UNSTABLE FOR OUTFLOWS BETWEEN         5. TO      1498.
                THE ROUTED HYDROGRAPH SHOULD BE EXAMINED FOR OSCILLATIONS OR OUTFLOWS GREATER THAN PEAK INFLOWS.
                THIS CAN BE CORRECTED BY DECREASING THE TIME INTERVAL OR INCREASING STORAGE (USE A LONGER REACH.)

      ***              ***              ***              ***              ***

                     HYDROGRAPH AT STATION     RRHV2

  PEAK FLOW      TIME                             MAXIMUM AVERAGE FLOW
                                      6-HR         24-HR         72-HR       24.92-HR
+   (CFS)        (HR)
                            (CFS)
+      35.       12.17                  5.            1.            1.            1.
                          (INCHES)   1.274         1.333         1.333         1.333
                           (AC-FT)      2.            2.            2.            2.
```

```
 PEAK STORAGE   TIME                    MAXIMUM AVERAGE STORAGE
                                 6-HR       24-HR       72-HR      24.92-HR
+  (AC-FT)      (HR)
       0.      12.17                0.          0.          0.          0.

  PEAK STAGE   TIME                    MAXIMUM AVERAGE STAGE
                                 6-HR       24-HR       72-HR      24.92-HR
+   (FEET)      (HR)
   1140.32     12.17           1140.06     1140.01     1140.01     1140.01

                          CUMULATIVE AREA =     .04 SQ MI
```

*** ***

```
                 **************
                 *            *
  47 KK          *     CPHV1  *
                 *            *
                 **************
                          COMBINE ROUTED FLOW FROM SUB-BASINS WC16B AND WC17B

  49 HC            HYDROGRAPH COMBINATION
                        ICOMP           2  NUMBER OF HYDROGRAPHS TO COMBINE
                                                                    ***
       ***              ***              ***              ***              ***

                          HYDROGRAPH AT STATION    CPHV1

  PEAK FLOW    TIME                    MAXIMUM AVERAGE FLOW
                                 6-HR       24-HR       72-HR      24.92-HR
+   (CFS)       (HR)
                  (CFS)
+      67.      12.17                9.          2.          2.          2.
                (INCHES)          1.376       1.412       1.412       1.412
                 (AC-FT)             4.          4.          4.          4.

                          CUMULATIVE AREA =     .06 SQ MI
```

*** ***

```
                 **************
                 *            *
  50 KK          *     RRHV3  *
                 *            *
                 **************
                          ROUTE FLOW FROM COMPUTATION POINT CPHV1 TO COMPUTATION POINT CPHV2(1ST REACH)

              HYDROGRAPH ROUTING DATA

  52 RS         STORAGE ROUTING
                      NSTPS           1  NUMBER OF SUBREACHES
                       ITYP        ELEV  TYPE OF INITIAL CONDITION
                     RSVRIC     1137.00  INITIAL CONDITION
                          X         .00 WORKING R AND D COEFFICIENT

  53 RC         NORMAL DEPTH CHANNEL
                       ANL        .035  LEFT OVERBANK N-VALUE
                       ANCH       .040  MAIN CHANNEL N-VALUE
                       ANR        .035  RIGHT OVERBANK N-VALUE
                     RLNTH         400.  REACH LENGTH
                       SEL       .0100  ENERGY SLOPE
                     ELMAX      1140.0  MAX. ELEV. FOR STORAGE/OUTFLOW CALCULATION

                                CROSS-SECTION DATA
                        --- LEFT OVERBANK --- + ------ MAIN CHANNEL ------- + --- RIGHT OVERBANK ---
  55 RY       ELEVATION  1141.00   1140.00   1138.00   1137.00   1137.00   1138.00   1139.00   1140.00
  54 RX       DISTANCE       .00     30.00     40.00     60.00     70.00    110.00    150.00    180.00
                                                ***
                                COMPUTED STORAGE-OUTFLOW-ELEVATION DATA

        STORAGE       .00       .02       .06       .11       .17       .24       .33       .44       .55       .67
        OUTFLOW       .00      2.10      8.15     19.06     35.80     59.26     90.31    135.96    194.36    263.15
      ELEVATION   1137.00   1137.16   1137.32   1137.47   1137.63   1137.79   1137.95   1138.10   1138.26   1138.42

        STORAGE       .81       .95      1.11      1.27      1.45      1.63      1.82      2.01      2.22      2.43
        OUTFLOW    342.92    434.20    537.52    653.83    783.80    926.68   1082.75   1252.27   1435.54   1632.85
      ELEVATION   1138.58   1138.74   1138.89   1139.05   1139.21   1139.37   1139.53   1139.68   1139.84   1140.00

*** WARNING *** MODIFIED PULS ROUTING MAY BE NUMERICALLY UNSTABLE FOR OUTFLOWS BETWEEN       36. TO     1633.
                THE ROUTED HYDROGRAPH SHOULD BE EXAMINED FOR OSCILLATIONS OR OUTFLOWS GREATER THAN PEAK INFLOWS.
                THIS CAN BE CORRECTED BY DECREASING THE TIME INTERVAL OR INCREASING STORAGE (USE A LONGER REACH.)
```



```
       ***              ***              ***              ***              ***

                          HYDROGRAPH AT STATION    RRHV3

  PEAK FLOW    TIME                    MAXIMUM AVERAGE FLOW
                                 6-HR       24-HR       72-HR      24.92-HR
+   (CFS)       (HR)
                  (CFS)
+      66.      12.17                9.          2.          2.          2.
                (INCHES)          1.376       1.412       1.412       1.412
                 (AC-FT)             4.          4.          4.          4.

 PEAK STORAGE   TIME                    MAXIMUM AVERAGE STORAGE
                                 6-HR       24-HR       72-HR      24.92-HR
+  (AC-FT)      (HR)
       0.      12.17                0.          0.          0.          0.

  PEAK STAGE   TIME                    MAXIMUM AVERAGE STAGE
                                 6-HR       24-HR       72-HR      24.92-HR
+   (FEET)      (HR)
   1137.82     12.17           1137.18     1137.05     1137.05     1137.05

                          CUMULATIVE AREA =     .06 SQ MI
```

*** ***

```
                 **************
                 *            *
  56 KK          *     RRHV4  *
                 *            *
                 **************
                          ROUTE FLOW FROM COMPUTATION POINT CPHV1 TO COMPUTATION POINT CPHV2(2ND REACH)

              HYDROGRAPH ROUTING DATA

  58 RS         STORAGE ROUTING
                      NSTPS           1  NUMBER OF SUBREACHES
                       ITYP        ELEV  TYPE OF INITIAL CONDITION
                     RSVRIC     1141.00  INITIAL CONDITION
                          X         .00 WORKING R AND D COEFFICIENT

  59 RC         NORMAL DEPTH CHANNEL
                       ANL        .035  LEFT OVERBANK N-VALUE
                       ANCH       .040  MAIN CHANNEL N-VALUE
                       ANR        .035  RIGHT OVERBANK N-VALUE
                     RLNTH         400.  REACH LENGTH
                       SEL       .0100  ENERGY SLOPE
                     ELMAX      1146.0  MAX. ELEV. FOR STORAGE/OUTFLOW CALCULATION

                                CROSS-SECTION DATA
                        --- LEFT OVERBANK --- + ------ MAIN CHANNEL ------- + --- RIGHT OVERBANK ---
  61 RY       ELEVATION  1146.00   1144.00   1142.00   1141.00   1141.00   1142.00   1144.00   1146.00
  60 RX       DISTANCE       .00     50.00    100.00    130.00    150.00    170.00    220.00    290.00
                                                ***
                                COMPUTED STORAGE-OUTFLOW-ELEVATION DATA

        STORAGE       .00       .06       .16       .29       .45       .64       .86      1.12      1.40      1.72
        OUTFLOW       .00      9.23     33.91     76.28    142.36    246.09    379.65    546.29    748.89    990.19
      ELEVATION   1141.00   1141.26   1141.53   1141.79   1142.05   1142.32   1142.58   1142.84   1143.11   1143.37

        STORAGE      2.07      2.46      2.87      3.32      3.81      4.34      4.91      5.52      6.16      6.84
        OUTFLOW   1272.80   1599.25   1967.95   2384.76   2855.75   3383.80   3971.76   4622.41   5338.49   6122.91
      ELEVATION   1143.63   1143.90   1144.16   1144.42   1144.68   1144.95   1145.21   1145.47   1145.74   1146.00

*** WARNING *** MODIFIED PULS ROUTING MAY BE NUMERICALLY UNSTABLE FOR OUTFLOWS BETWEEN       34. TO     6123.
                THE ROUTED HYDROGRAPH SHOULD BE EXAMINED FOR OSCILLATIONS OR OUTFLOWS GREATER THAN PEAK INFLOWS.
                THIS CAN BE CORRECTED BY DECREASING THE TIME INTERVAL OR INCREASING STORAGE (USE A LONGER REACH.)

       ***              ***              ***              ***              ***

                          HYDROGRAPH AT STATION    RRHV4

  PEAK FLOW    TIME                    MAXIMUM AVERAGE FLOW
                                 6-HR       24-HR       72-HR      24.92-HR
+   (CFS)       (HR)
                  (CFS)
+      65.      12.25                9.          2.          2.          2.
                (INCHES)          1.376       1.412       1.412       1.412
                 (AC-FT)             4.          4.          4.          4.

 PEAK STORAGE   TIME                    MAXIMUM AVERAGE STORAGE
                                 6-HR       24-HR       72-HR      24.92-HR
+  (AC-FT)      (HR)
       0.      12.25                0.          0.          0.          0.

  PEAK STAGE   TIME                    MAXIMUM AVERAGE STAGE
                                 6-HR       24-HR       72-HR      24.92-HR
+   (FEET)      (HR)
   1141.72     12.25           1141.14     1141.03     1141.03     1141.03
```

```
             CUMULATIVE AREA =      .06 SQ MI

*** *** *** *** *** *** *** *** *** *** *** *** *** *** *** *** *** *** *** *** *** *** *** *** *** *** *** *** *** *** *** *** *** ***

              **************
              *            *
   62 KK      *   WC18B    *
              *            *
              **************
                      SUB-BASIN WC18B -LAND USE - NATURAL DESERT HILLSLOPES,MINOR DEVELOPMENT
                      24-HOUR TYPE II RAINFALL WAS USED TO FIND TC & R FOR THIS BASIN
                      THIS BASIN USED RAINFALL REDUCTION FACTOR OF .97

                SUBBASIN RUNOFF DATA

   66 BA          SUBBASIN CHARACTERISTICS
                        TAREA         .06  SUBBASIN AREA

                  PRECIPITATION DATA

   16 PB                STORM        4.07  BASIN TOTAL PRECIPITATION

   16 PI              INCREMENTAL PRECIPITATION PATTERN
                        .00       .00       .00       .00       .00       .00       .00       .00       .00       .00
                        .00       .00       .00       .00       .00       .00       .00       .00       .00       .00
                        .00       .00       .00       .00       .00       .00       .00       .00       .00       .00
                        .00       .00       .00       .00       .00       .00       .00       .00       .00       .00
                        .00       .00       .00       .00       .00       .00       .00       .00       .00       .00
                        .00       .00       .00       .00       .00       .00       .00       .00       .00       .00
                        .00       .00       .00       .00       .00       .00       .00       .00       .00       .00
                        .00       .00       .00       .00       .00       .00       .00       .00       .00       .00
                        .00       .00       .00       .00       .00       .00       .00       .00       .00       .00
                        .00       .00       .00       .00       .00       .00       .00       .00       .00       .00
                        .00       .00       .00       .00       .00       .00       .00       .00       .00       .00
                        .00       .00       .00       .00       .00       .00       .00       .00       .00       .00
                        .00       .00       .00       .00       .00       .00       .01       .01       .01       .01
                        .01       .01       .01       .01       .01       .01       .01       .01       .06       .06
                        .06       .06       .06       .06       .01       .01       .01       .01       .01       .01
                        .01       .01       .01       .01       .01       .01       .00       .00       .00       .00
                        .00       .00       .00       .00       .00       .00       .00       .00       .00       .00
                        .00       .00       .00       .00       .00       .00       .00       .00       .00       .00
                        .00       .00       .00       .00       .00       .00       .00       .00       .00       .00
                        .00       .00       .00       .00       .00       .00       .00       .00       .00       .00
                        .00       .00       .00       .00       .00       .00       .00       .00       .00       .00
                        .00       .00       .00       .00       .00       .00       .00       .00       .00       .00
                        .00       .00       .00       .00       .00       .00       .00       .00       .00       .00
                        .00       .00       .00       .00       .00       .00       .00       .00       .00       .00
                        .00       .00       .00       .00       .00       .00       .00       .00       .00       .00
                        .00       .00       .00       .00       .00       .00       .00       .00       .00       .00
                        .00       .00       .00       .00       .00       .00       .00       .00       .00       .00
                        .00       .00       .00       .00       .00       .00       .00       .00       .00       .00
                        .00       .00       .00       .00       .00       .00       .00       .00

   67 LG          GREEN AND AMPT LOSS RATE
                        STRTL         .15  STARTING LOSS
                          DTH         .26  MOISTURE DEFICIT
                         PSIF        4.10  WETTING FRONT SUCTION
                        XKSAT         .24  HYDRAULIC CONDUCTIVITY
                        RTIMP         .00  PERCENT IMPERVIOUS AREA

   68 UC          CLARK UNITGRAPH
                           TC         .30  TIME OF CONCENTRATION
                            R         .34  STORAGE COEFFICIENT

   69 UA          ACCUMULATED-AREA VS. TIME,  11 ORDINATES
                        .0       3.0       5.0       8.0      12.0      20.0      43.0      75.0      90.0      96.0
                     100.0

                                                          ***

                                                 UNIT HYDROGRAPH PARAMETERS
                                            CLARK   TC=   .30 HR,        R=   .34 HR
                                           SNYDER   TP=   .30 HR,       CP=   .63

                                                      UNIT HYDROGRAPH
                                                 24 END-OF-PERIOD ORDINATES
                 4.       20.       58.       80.       66.       52.       40.       32.       25.       19.
                15.       12.        9.        7.        6.        4.        3.        3.        2.        2.
                 1.        1.        1.        1.

      ***            ***            ***            ***            ***

                              HYDROGRAPH AT STATION      WC18B

        TOTAL RAINFALL =     4.07, TOTAL LOSS =     2.68, TOTAL EXCESS =     1.40

       PEAK FLOW      TIME                          MAXIMUM AVERAGE FLOW
                                           6-HR        24-HR        72-HR     24.92-HR
   +     (CFS)        (HR)
                                  (CFS)
   +       72.       12.17                    9.           2.           2.           2.
```



```
                                (INCHES)      1.389        1.389        1.389        1.389
                                 (AC-FT)         4.           4.           4.           4.

                              CUMULATIVE AREA =      .06 SQ MI

*** *** *** *** *** *** *** *** *** *** *** *** *** *** *** *** *** *** *** *** *** *** *** *** *** *** *** *** *** *** *** *** *** ***

              **************
              *            *
   71 KK      *   RRHV5    *
              *            *
              **************
                      ROUTE FLOW FROM SUB-BASIN WC18B TO COMPUTATION POINT CPHV2

                HYDROGRAPH ROUTING DATA

   73 RS          STORAGE ROUTING
                        NSTPS           1  NUMBER OF SUBREACHES
                         ITYP        ELEV  TYPE OF INITIAL CONDITION
                       RSVRIC     1136.00  INITIAL CONDITION
                            X         .00  WORKING R AND D COEFFICIENT

   74 RC          NORMAL DEPTH CHANNEL
                          ANL        .035  LEFT OVERBANK N-VALUE
                         ANCH        .040  MAIN CHANNEL N-VALUE
                          ANR        .035  RIGHT OVERBANK N-VALUE
                        RLNTH        650.  REACH LENGTH
                          SEL       .0170  ENERGY SLOPE
                        ELMAX      1140.0  MAX. ELEV. FOR STORAGE/OUTFLOW CALCULATION

                                                 CROSS-SECTION DATA
                            --- LEFT OVERBANK --- + ------ MAIN CHANNEL ------- + --- RIGHT OVERBANK ---
   76 RY        ELEVATION  1140.00   1139.00   1138.00   1136.00   1136.00   1138.00   1139.00   1140.00
   75 RX         DISTANCE      .00     60.00    120.00    140.00    160.00    190.00    220.00    240.00

                                                        ***

                                          COMPUTED STORAGE-OUTFLOW-ELEVATION DATA

             STORAGE        .00       .07       .16       .26       .38       .52       .67       .85      1.03      1.24
             OUTFLOW        .00      7.61     25.57     53.31     91.31    140.26    200.90    274.00    360.33    460.63
           ELEVATION    1136.00   1136.21   1136.42   1136.63   1136.84   1137.05   1137.26   1137.47   1137.68   1137.90

             STORAGE       1.46      1.74      2.08      2.48      2.94      3.45      4.02      4.64      5.32      6.05
             OUTFLOW     589.05    751.81    943.13   1168.34   1432.05   1740.06   2094.10   2496.55   2950.33   3458.55
           ELEVATION    1138.11   1138.32   1138.53   1138.74   1138.95   1139.16   1139.37   1139.58   1139.79   1140.00

*** WARNING *** MODIFIED PULS ROUTING MAY BE NUMERICALLY UNSTABLE FOR OUTFLOWS BETWEEN        53. TO     3459.
                THE ROUTED HYDROGRAPH SHOULD BE EXAMINED FOR OSCILLATIONS OR OUTFLOWS GREATER THAN PEAK INFLOWS.
                THIS CAN BE CORRECTED BY DECREASING THE TIME INTERVAL OR INCREASING STORAGE (USE A LONGER REACH.)

      ***            ***            ***            ***            ***

                              HYDROGRAPH AT STATION      RRHV5

       PEAK FLOW      TIME                          MAXIMUM AVERAGE FLOW
                                           6-HR        24-HR        72-HR     24.92-HR
   +     (CFS)        (HR)
                                  (CFS)
   +       71.       12.17                    9.           2.           2.           2.
                                (INCHES)      1.389        1.389        1.389        1.389
                                 (AC-FT)         4.           4.           4.           4.

    PEAK STORAGE      TIME                        MAXIMUM AVERAGE STORAGE
                                           6-HR        24-HR        72-HR     24.92-HR
   +   (AC-FT)        (HR)
            0.       12.17                    0.           0.           0.           0.

      PEAK STAGE      TIME                          MAXIMUM AVERAGE STAGE
                                           6-HR        24-HR        72-HR     24.92-HR
   +    (FEET)        (HR)
         1136.73     12.17              1136.13      1136.03      1136.03      1136.03

                              CUMULATIVE AREA =      .06 SQ MI

*** *** *** *** *** *** *** *** *** *** *** *** *** *** *** *** *** *** *** *** *** *** *** *** *** *** *** *** *** *** *** *** *** ***

              **************
              *            *
   77 KK      *   WC19B    *
              *            *
              **************
                      SUB-BASIN WC19B -LAND USE - DESERT MOUNTAIN,DESERT HILLS;MINOR DEVELOPMENT
                      24-HOUR TYPE II RAINFALL WAS USED TO FIND TC & R FOR THIS BASIN
                      THIS BASIN USED RAINFALL REDUCTION FACTOR OF .97

                SUBBASIN RUNOFF DATA
```

```
 81 BA          SUBBASIN CHARACTERISTICS
                      TAREA          .21  SUBBASIN AREA

                PRECIPITATION DATA

 16 PB                STORM         4.07  BASIN TOTAL PRECIPITATION

 16 PI            INCREMENTAL PRECIPITATION PATTERN
                      .00      .00      .00      .00      .00      .00      .00      .00      .00      .00
                      .00      .00      .00      .00      .00      .00      .00      .00      .00      .00
                      .00      .00      .00      .00      .00      .00      .00      .00      .00      .00
                      .00      .00      .00      .00      .00      .00      .00      .00      .00      .00
                      .00      .00      .00      .00      .00      .00      .00      .00      .00      .00
                      .00      .00      .00      .00      .00      .00      .00      .00      .00      .00
                      .00      .00      .00      .00      .00      .00      .00      .00      .00      .00
                      .00      .00      .00      .00      .00      .00      .00      .00      .00      .00
                      .00      .00      .00      .00      .00      .00      .00      .00      .00      .00
                      .00      .00      .00      .00      .00      .00      .00      .00      .00      .00
                      .00      .00      .00      .00      .00      .00      .00      .00      .00      .00
                      .00      .00      .00      .00      .00      .00      .00      .00      .00      .00
                      .00      .00      .00      .00      .00      .00      .01      .01      .01      .01
                      .01      .01      .01      .01      .01      .01      .01      .01      .06      .06
                      .06      .06      .06      .06      .01      .01      .01      .01      .01      .01
                      .01      .01      .01      .01      .01      .01      .00      .00      .00      .00
                      .00      .00      .00      .00      .00      .00      .00      .00      .00      .00
                      .00      .00      .00      .00      .00      .00      .00      .00      .00      .00
                      .00      .00      .00      .00      .00      .00      .00      .00      .00      .00
                      .00      .00      .00      .00      .00      .00      .00      .00      .00      .00
                      .00      .00      .00      .00      .00      .00      .00      .00      .00      .00
                      .00      .00      .00      .00      .00      .00      .00      .00      .00      .00
                      .00      .00      .00      .00      .00      .00      .00      .00      .00      .00
                      .00      .00      .00      .00      .00      .00      .00      .00      .00      .00
                      .00      .00      .00      .00      .00      .00      .00      .00      .00      .00
                      .00      .00      .00      .00      .00      .00      .00      .00      .00      .00
                      .00      .00      .00      .00      .00      .00      .00      .00      .00      .00
                      .00      .00      .00      .00      .00      .00      .00      .00      .00      .00
                      .00      .00      .00      .00      .00      .00      .00      .00

 82 LG          GREEN AND AMPT LOSS RATE
                      STRTL          .15  STARTING LOSS
                        DTH          .28  MOISTURE DEFICIT
                       PSIF         3.52  WETTING FRONT SUCTION
                     XKSAT           .26  HYDRAULIC CONDUCTIVITY
                     RTIMP         40.00  PERCENT IMPERVIOUS AREA

 83 UC          CLARK UNITGRAPH
                         TC          .22  TIME OF CONCENTRATION
                          R          .16  STORAGE COEFFICIENT

 84 UA          ACCUMULATED-AREA VS. TIME,  11 ORDINATES
                      .0       3.0      5.0      8.0     12.0     20.0     43.0     75.0     90.0     96.0
                   100.0

                                                       ***

                                          UNIT HYDROGRAPH PARAMETERS
                                      CLARK  TC=   .22 HR,        R=   .16 HR
                                     SNYDER  TP=   .20 HR,       CP=   .75

                                                UNIT HYDROGRAPH
                                         12 END-OF-PERIOD ORDINATES
              38.     306.     476.     330.     195.     115.      68.      40.      24.      14.
               8.       5.

    ***           ***           ***           ***           ***

                         HYDROGRAPH AT STATION     WC19B

  TOTAL RAINFALL =    4.07, TOTAL LOSS =    1.62, TOTAL EXCESS =    2.45

  PEAK FLOW      TIME                           MAXIMUM AVERAGE FLOW
                                         6-HR        24-HR       72-HR     24.92-HR
+   (CFS)        (HR)
                               (CFS)
+     350.      12.08                      44.         14.         13.         13.
                            (INCHES)     1.963       2.437       2.439       2.439
                             (AC-FT)       22.         27.         27.         27.

                          CUMULATIVE AREA =      .21 SQ MI


*** *** *** *** *** *** *** *** *** *** *** *** *** *** *** *** *** *** *** *** *** *** *** *** *** *** *** *** *** *** *** *** *** ***


             **************
             *            *
 86 KK       *   RRHV6    *
             *            *
             **************
                          ROUTE FLOW FROM SUB-BASIN WC19B TO COMPUTATION POINT CPHV2

             HYDROGRAPH ROUTING DATA
```



```
 88 RS          STORAGE ROUTING
                      NSTPS            1  NUMBER OF SUBREACHES
                       ITYP         ELEV  TYPE OF INITIAL CONDITION
                     RSVRIC      1137.00  INITIAL CONDITION
                          X          .00 WORKING R AND D COEFFICIENT

 89 RC          NORMAL DEPTH CHANNEL
                        ANL         .035  LEFT OVERBANK N-VALUE
                       ANCH         .040  MAIN CHANNEL N-VALUE
                        ANR         .035  RIGHT OVERBANK N-VALUE
                      RLNTH         640.  REACH LENGTH
                        SEL        .0180  ENERGY SLOPE
                      ELMAX       1139.0  MAX. ELEV. FOR STORAGE/OUTFLOW CALCULATION

                                    CROSS-SECTION DATA
                         --- LEFT OVERBANK --- + ------ MAIN CHANNEL ------- + --- RIGHT OVERBANK ---
 91 RY        ELEVATION  1139.00   1138.50   1138.00   1137.00   1137.00   1138.00   1139.00   1140.00
 90 RX         DISTANCE      .00     10.00     30.00     45.00     60.00     75.00    110.00    140.00

                                                   ***

                                     COMPUTED STORAGE-OUTFLOW-ELEVATION DATA

            STORAGE       .00       .03       .06       .09       .13       .18       .23       .28       .34       .41
            OUTFLOW       .00      1.83      6.07     12.50     21.17     32.17     45.65     61.73     80.55    102.25
          ELEVATION   1137.00   1137.11   1137.21   1137.32   1137.42   1137.53   1137.63   1137.74   1137.84   1137.95

            STORAGE       .48       .56       .65       .76       .88      1.01      1.15      1.29      1.45      1.61
            OUTFLOW    129.67    163.73    202.67    247.15    297.76    355.59    420.44    492.37    571.62    658.44
          ELEVATION   1138.05   1138.16   1138.26   1138.37   1138.47   1138.58   1138.68   1138.79   1138.89   1139.00

*** WARNING *** MODIFIED PULS ROUTING MAY BE NUMERICALLY UNSTABLE FOR OUTFLOWS BETWEEN       46. TO       658.
                THE ROUTED HYDROGRAPH SHOULD BE EXAMINED FOR OSCILLATIONS OR OUTFLOWS GREATER THAN PEAK INFLOWS.
                THIS CAN BE CORRECTED BY DECREASING THE TIME INTERVAL OR INCREASING STORAGE (USE A LONGER REACH.)

    ***           ***           ***           ***           ***

                         HYDROGRAPH AT STATION     RRHV6

  PEAK FLOW      TIME                           MAXIMUM AVERAGE FLOW
                                         6-HR        24-HR       72-HR     24.92-HR
+   (CFS)        (HR)
                               (CFS)
+     349.      12.08                      44.         14.         13.         13.
                            (INCHES)     1.963       2.437       2.439       2.439
                             (AC-FT)       22.         27.         27.         27.

  PEAK STORAGE   TIME                         MAXIMUM AVERAGE STORAGE
                                         6-HR        24-HR       72-HR     24.92-HR
+   (AC-FT)      (HR)
        1.      12.08                       0.          0.          0.          0.

  PEAK STAGE     TIME                          MAXIMUM AVERAGE STAGE
                                         6-HR        24-HR       72-HR     24.92-HR
+   (FEET)       (HR)
   1138.57      12.08                  1137.45     1137.22     1137.22     1137.22

                          CUMULATIVE AREA =      .21 SQ MI


*** *** *** *** *** *** *** *** *** *** *** *** *** *** *** *** *** *** *** *** *** *** *** *** *** *** *** *** *** *** *** *** *** ***


             **************
             *            *
 92 KK       *    PM3B    *
             *            *
             **************
                          SUB-BASIN PM3B -LAND USE - NATURAL DESERT HILLSLOPES,MINOR DEVELOPMENT
                          24-HOUR TYPE II RAINFALL WAS USED TO FIND TC & R FOR THIS BASIN
                          THIS BASIN USED RAINFALL REDUCTION FACTOR OF .97

             SUBBASIN RUNOFF DATA

 96 BA          SUBBASIN CHARACTERISTICS
                      TAREA          .06  SUBBASIN AREA

                PRECIPITATION DATA

 16 PB                STORM         4.07  BASIN TOTAL PRECIPITATION

 16 PI            INCREMENTAL PRECIPITATION PATTERN
                      .00      .00      .00      .00      .00      .00      .00      .00      .00      .00
                      .00      .00      .00      .00      .00      .00      .00      .00      .00      .00
                      .00      .00      .00      .00      .00      .00      .00      .00      .00      .00
                      .00      .00      .00      .00      .00      .00      .00      .00      .00      .00
                      .00      .00      .00      .00      .00      .00      .00      .00      .00      .00
                      .00      .00      .00      .00      .00      .00      .00      .00      .00      .00
                      .00      .00      .00      .00      .00      .00      .00      .00      .00      .00
                      .00      .00      .00      .00      .00      .00      .00      .00      .00      .00
                      .00      .00      .00      .00      .00      .00      .00      .00      .00      .00
                      .00      .00      .00      .00      .00      .00      .00      .00      .00      .00
                      .00      .00      .00      .00      .00      .00      .00      .00      .00      .00
```

```
                 .00      .00      .00      .00      .00      .00      .00      .00      .00      .00
                 .00      .00      .00      .00      .00      .00      .01      .01      .01      .01
                 .01      .01      .01      .01      .01      .01      .01      .01      .06      .06
                 .06      .06      .06      .06      .01      .01      .01      .01      .01      .01
                 .01      .01      .01      .01      .01      .01      .00      .00      .00      .00
                 .00      .00      .00      .00      .00      .00      .00      .00      .00      .00
                 .00      .00      .00      .00      .00      .00      .00      .00      .00      .00
                 .00      .00      .00      .00      .00      .00      .00      .00      .00      .00
                 .00      .00      .00      .00      .00      .00      .00      .00      .00      .00
                 .00      .00      .00      .00      .00      .00      .00      .00      .00      .00
                 .00      .00      .00      .00      .00      .00      .00      .00      .00      .00
                 .00      .00      .00      .00      .00      .00      .00      .00      .00      .00
                 .00      .00      .00      .00      .00      .00      .00      .00      .00      .00
                 .00      .00      .00      .00      .00      .00      .00      .00      .00      .00
                 .00      .00      .00      .00      .00      .00      .00      .00      .00      .00
                 .00      .00      .00      .00      .00      .00      .00      .00      .00      .00
                 .00      .00      .00      .00      .00      .00      .00      .00      .00      .00
                 .00      .00      .00      .00      .00      .00      .00      .00

 97 LG        GREEN AND AMPT LOSS RATE
                   STRTL        .15  STARTING LOSS
                     DTH        .34  MOISTURE DEFICIT
                    PSIF       3.10  WETTING FRONT SUCTION
                   XKSAT        .95  HYDRAULIC CONDUCTIVITY
                   RTIMP       5.00  PERCENT IMPERVIOUS AREA

 98 UC        CLARK UNITGRAPH
                      TC        .28  TIME OF CONCENTRATION
                       R        .27  STORAGE COEFFICIENT

 99 UA        ACCUMULATED-AREA VS. TIME,  11 ORDINATES
                     .0       3.0       5.0       8.0      12.0      20.0      43.0      75.0      90.0      96.0
                  100.0

                                              ***

                                        UNIT HYDROGRAPH PARAMETERS
                                   CLARK   TC=   .28 HR,       R=   .27 HR
                                   SNYDER  TP=   .28 HR,      CP=   .67

                                              UNIT HYDROGRAPH
                                        20 END-OF-PERIOD ORDINATES
            5.        28.       75.       91.       70.       52.       38.       28.       21.       15.
           11.         8.        6.        4.        3.        2.        2.        1.        1.        1.

     ***          ***          ***          ***          ***

                    HYDROGRAPH AT STATION     PM3B

   TOTAL RAINFALL =    4.07, TOTAL LOSS =    3.19, TOTAL EXCESS =    .88

 PEAK FLOW     TIME                          MAXIMUM AVERAGE FLOW
                                    6-HR         24-HR        72-HR       24.92-HR
+  (CFS)       (HR)
                           (CFS)
+     46.      12.17                   5.           1.           1.           1.
                         (INCHES)    .818         .877         .877         .877
                          (AC-FT)      3.           3.           3.           3.

                         CUMULATIVE AREA =     .06 SQ MI


*** *** *** *** *** *** *** *** *** *** *** *** *** *** *** *** *** *** *** *** *** *** *** *** *** *** *** *** *** *** *** *** ***


              *************
              *           *
 101 KK       *   CPHV2   *
              *           *
              *************
                          COMBINE ROUTED FLOW FROM CPHV1, WC18B, WC19B WITH RUNOFF FROM SUB-BASIN PM3B

 103 HC       HYDROGRAPH COMBINATION
                  ICOMP          4  NUMBER OF HYDROGRAPHS TO COMBINE

                                              ***

     ***          ***          ***          ***          ***

                    HYDROGRAPH AT STATION     CPHV2

 PEAK FLOW     TIME                          MAXIMUM AVERAGE FLOW
                                    6-HR         24-HR        72-HR       24.92-HR
+  (CFS)       (HR)
                           (CFS)
+    516.      12.08                  67.          20.          19.          19.
                         (INCHES)   1.609        1.880        1.882        1.882
                          (AC-FT)     33.          39.          39.          39.

                         CUMULATIVE AREA =     .39 SQ MI
```



```
*** *** *** *** *** *** *** *** *** *** *** *** *** *** *** *** *** *** *** *** *** *** *** *** *** *** *** *** *** *** *** *** ***

              *************
              *           *
 104 KK       *   RRHV7   *
              *           *
              *************
                      ROUTE FLOW FROM COMPUTATION CPHV2 TO COMPUTATION POINT CPHV3

               HYDROGRAPH ROUTING DATA

 106 RS           STORAGE ROUTING
                      NSTPS          1  NUMBER OF SUBREACHES
                       ITYP       ELEV  TYPE OF INITIAL CONDITION
                     RSVRIC    1126.00  INITIAL CONDITION
                          X        .00  WORKING R AND D COEFFICIENT

 107 RC           NORMAL DEPTH CHANNEL
                        ANL       .035  LEFT OVERBANK N-VALUE
                       ANCH       .040  MAIN CHANNEL N-VALUE
                        ANR       .035  RIGHT OVERBANK N-VALUE
                      RLNTH       750.  REACH LENGTH
                        SEL      .0110  ENERGY SLOPE
                      ELMAX     1130.0  MAX. ELEV. FOR STORAGE/OUTFLOW CALCULATION

                                         CROSS-SECTION DATA
                    --- LEFT OVERBANK --- + ------ MAIN CHANNEL ------- + --- RIGHT OVERBANK ---
 109 RY       ELEVATION   1130.00   1129.00   1128.00   1126.00   1126.00   1128.00   1132.00   1133.00
 108 RX        DISTANCE       .00     40.00     90.00    160.00    190.00    210.00    250.00    390.00

                                              ***

                               COMPUTED STORAGE-OUTFLOW-ELEVATION DATA

          STORAGE        .00       .13       .29       .48       .71       .97      1.27      1.60      1.97      2.37
          OUTFLOW        .00      9.29     31.60     66.68    115.44    179.03    258.60    355.35    470.42    604.94
        ELEVATION    1126.00   1126.21   1126.42   1126.63   1126.84   1127.05   1127.26   1127.47   1127.68   1127.90

          STORAGE       2.81      3.29      3.81      4.39      5.01      5.67      6.37      7.11      7.88      8.70
          OUTFLOW     778.20    993.56   1236.45   1509.22   1813.90   2153.64   2528.40   2938.84   3386.12   3871.49
        ELEVATION    1128.11   1128.32   1128.53   1128.74   1128.95   1129.16   1129.37   1129.58   1129.79   1130.00

*** WARNING *** MODIFIED PULS ROUTING MAY BE NUMERICALLY UNSTABLE FOR OUTFLOWS BETWEEN      259. TO     3871.
                THE ROUTED HYDROGRAPH SHOULD BE EXAMINED FOR OSCILLATIONS OR OUTFLOWS GREATER THAN PEAK INFLOWS.
                THIS CAN BE CORRECTED BY DECREASING THE TIME INTERVAL OR INCREASING STORAGE (USE A LONGER REACH.)

     ***          ***          ***          ***          ***

                    HYDROGRAPH AT STATION     RRHV7

 PEAK FLOW     TIME                          MAXIMUM AVERAGE FLOW
                                    6-HR         24-HR        72-HR       24.92-HR
+  (CFS)       (HR)
                           (CFS)
+    508.      12.17                  67.          20.          19.          19.
                         (INCHES)   1.609        1.880        1.881        1.881
                          (AC-FT)     33.          39.          39.          39.

 PEAK STORAGE  TIME                        MAXIMUM AVERAGE STORAGE
                                    6-HR         24-HR        72-HR       24.92-HR
+  (AC-FT)     (HR)
        2.     12.17                   0.           0.           0.           0.

 PEAK STAGE    TIME                         MAXIMUM AVERAGE STAGE
                                    6-HR         24-HR        72-HR       24.92-HR
+  (FEET)      (HR)
   1127.74     12.17              1126.45      1126.18      1126.17      1126.17

                         CUMULATIVE AREA =     .39 SQ MI


*** *** *** *** *** *** *** *** *** *** *** *** *** *** *** *** *** *** *** *** *** *** *** *** *** *** *** *** *** *** *** *** ***

              *************
              *           *
 110 KK       *   WC20B   *
              *           *
              *************
                      SUB-BASIN WC20B -LAND USE - NATURAL DESERT HILLSLOPES,MINOR DEVELOPMENT
                      24-HOUR TYPE II RAINFALL WAS USED TO FIND TC & R FOR THIS BASIN
                      THIS BASIN USED RAINFALL REDUCTION FACTOR OF .97

               SUBBASIN RUNOFF DATA

 114 BA           SUBBASIN CHARACTERISTICS
                      TAREA        .01  SUBBASIN AREA

                  PRECIPITATION DATA

  16 PB                 STORM     4.07  BASIN TOTAL PRECIPITATION
```

```
16 PI          INCREMENTAL PRECIPITATION PATTERN
                 .00     .00     .00     .00     .00     .00     .00     .00     .00     .00
                 .00     .00     .00     .00     .00     .00     .00     .00     .00     .00
                 .00     .00     .00     .00     .00     .00     .00     .00     .00     .00
                 .00     .00     .00     .00     .00     .00     .00     .00     .00     .00
                 .00     .00     .00     .00     .00     .00     .00     .00     .00     .00
                 .00     .00     .00     .00     .00     .00     .00     .00     .00     .00
                 .00     .00     .00     .00     .00     .00     .00     .00     .00     .00
                 .00     .00     .00     .00     .00     .00     .00     .00     .00     .00
                 .00     .00     .00     .00     .00     .00     .00     .00     .00     .00
                 .00     .00     .00     .00     .00     .00     .00     .00     .00     .00
                 .00     .00     .00     .00     .00     .00     .00     .00     .00     .00
                 .00     .00     .00     .00     .00     .00     .00     .00     .00     .00
                 .00     .00     .00     .00     .00     .00     .01     .01     .01     .01
                 .01     .01     .01     .01     .01     .01     .01     .01     .06     .06
                 .06     .06     .06     .06     .01     .01     .01     .01     .01     .01
                 .01     .01     .01     .01     .01     .01     .00     .00     .00     .00
                 .00     .00     .00     .00     .00     .00     .00     .00     .00     .00
                 .00     .00     .00     .00     .00     .00     .00     .00     .00     .00
                 .00     .00     .00     .00     .00     .00     .00     .00     .00     .00
                 .00     .00     .00     .00     .00     .00     .00     .00     .00     .00
                 .00     .00     .00     .00     .00     .00     .00     .00     .00     .00
                 .00     .00     .00     .00     .00     .00     .00     .00     .00     .00
                 .00     .00     .00     .00     .00     .00     .00     .00     .00     .00
                 .00     .00     .00     .00     .00     .00     .00     .00     .00     .00
                 .00     .00     .00     .00     .00     .00     .00     .00     .00     .00
                 .00     .00     .00     .00     .00     .00     .00     .00     .00     .00
                 .00     .00     .00     .00     .00     .00     .00     .00     .00     .00
                 .00     .00     .00     .00     .00     .00     .00     .00     .00     .00
                 .00     .00     .00     .00     .00     .00     .00     .00

115 LG         GREEN AND AMPT LOSS RATE
                     STRTL        .15  STARTING LOSS
                       DTH        .25  MOISTURE DEFICIT
                      PSIF       8.60  WETTING FRONT SUCTION
                     XKSAT        .07  HYDRAULIC CONDUCTIVITY
                     RTIMP        .00  PERCENT IMPERVIOUS AREA

116 UC         CLARK UNITGRAPH
                        TC        .23  TIME OF CONCENTRATION
                         R        .26  STORAGE COEFFICIENT

117 UA         ACCUMULATED-AREA VS. TIME,  11 ORDINATES
                    .0      3.0      5.0      8.0     12.0     20.0     43.0     75.0     90.0     96.0
                 100.0

                                              ***

                                 UNIT HYDROGRAPH PARAMETERS
                              CLARK   TC=   .23 HR,       R=   .26 HR
                             SNYDER   TP=   .23 HR,      CP=   .60

                                      UNIT HYDROGRAPH
                                 19 END-OF-PERIOD ORDINATES
               2.       13.      23.      20.      14.      10.       7.       5.       4.       3.
               2.        1.       1.       1.       1.       0.       0.       0.       0.

     ***          ***          ***          ***          ***

                    HYDROGRAPH AT STATION    WC20B

   TOTAL RAINFALL =    4.07, TOTAL LOSS =    2.28, TOTAL EXCESS =    1.80

  PEAK FLOW      TIME                        MAXIMUM AVERAGE FLOW
                                      6-HR        24-HR       72-HR     24.92-HR
+   (CFS)        (HR)
                             (CFS)
+      21.      12.08                   3.          1.          1.          1.
                           (INCHES)  1.790       1.790       1.790       1.790
                            (AC-FT)     1.          1.          1.          1.

                    CUMULATIVE AREA =     .01 SQ MI


*** *** *** *** *** *** *** *** *** *** *** *** *** *** *** *** *** *** *** *** *** *** *** *** *** *** *** *** *** *** *** *** ***

              **************
              *            *
119 KK        *    RRHV8   *
              *            *
              **************
                              ROUTE FLOW FROM SUB-BASIN WC20B TO COMPUTATION POINT CPHV3

                 HYDROGRAPH ROUTING DATA

121 RS             STORAGE ROUTING
                        NSTPS          1  NUMBER OF SUBREACHES
                         ITYP       ELEV  TYPE OF INITIAL CONDITION
                       RSVRIC    1132.00  INITIAL CONDITION
                            X        .00 WORKING R AND D COEFFICIENT

122 RC             NORMAL DEPTH CHANNEL
                          ANL       .035  LEFT OVERBANK N-VALUE
```



```
                         ANCH       .035  MAIN CHANNEL N-VALUE
                          ANR       .035  RIGHT OVERBANK N-VALUE
                        RLNTH       850.  REACH LENGTH
                          SEL      .0220  ENERGY SLOPE
                        ELMAX     1134.5  MAX. ELEV. FOR STORAGE/OUTFLOW CALCULATION

                                         CROSS-SECTION DATA
                            --- LEFT OVERBANK --- + ------ MAIN CHANNEL ------- + --- RIGHT OVERBANK ---
124 RY          ELEVATION  1134.50  1134.00  1133.00  1132.00  1132.00  1134.00  1134.00  1134.50
123 RX           DISTANCE      .00    10.00    20.00    30.00    40.00    60.00   170.00   220.00

                                                ***

                                 COMPUTED STORAGE-OUTFLOW-ELEVATION DATA

          STORAGE       .00       .03       .06       .11       .16       .21       .28       .35       .42       .50
          OUTFLOW       .00      2.26      7.59     15.82     27.10     41.62     59.61     81.30    108.03    140.57
        ELEVATION   1132.00   1132.13   1132.26   1132.39   1132.53   1132.66   1132.79   1132.92   1133.05   1133.18

          STORAGE       .59       .69       .79       .90      1.02      1.15      1.51      1.98      2.48      3.03
          OUTFLOW    177.48    218.99    265.32    316.67    373.24    435.22    525.90    657.13    820.90   1016.06
        ELEVATION   1133.32   1133.45   1133.58   1133.71   1133.84   1133.97   1134.11   1134.24   1134.37   1134.50

*** WARNING *** MODIFIED PULS ROUTING MAY BE NUMERICALLY UNSTABLE FOR OUTFLOWS BETWEEN       60. TO     1016.
                THE ROUTED HYDROGRAPH SHOULD BE EXAMINED FOR OSCILLATIONS OR OUTFLOWS GREATER THAN PEAK INFLOWS.
                THIS CAN BE CORRECTED BY DECREASING THE TIME INTERVAL OR INCREASING STORAGE (USE A LONGER REACH.)

     ***          ***          ***          ***          ***

                    HYDROGRAPH AT STATION    RRHV8

  PEAK FLOW      TIME                        MAXIMUM AVERAGE FLOW
                                      6-HR        24-HR       72-HR     24.92-HR
+   (CFS)        (HR)
                             (CFS)
+      21.      12.17                   3.          1.          1.          1.
                           (INCHES)  1.790       1.790       1.790       1.790
                            (AC-FT)     1.          1.          1.          1.

 PEAK STORAGE    TIME                        MAXIMUM AVERAGE STORAGE
                                      6-HR        24-HR       72-HR     24.92-HR
+  (AC-FT)       (HR)
        0.      12.17                   0.          0.          0.          0.

  PEAK STAGE     TIME                        MAXIMUM AVERAGE STAGE
                                      6-HR        24-HR       72-HR     24.92-HR
+   (FEET)       (HR)
   1132.45      12.17              1132.08     1132.02     1132.02     1132.02

                    CUMULATIVE AREA =     .01 SQ MI


*** *** *** *** *** *** *** *** *** *** *** *** *** *** *** *** *** *** *** *** *** *** *** *** *** *** *** *** *** *** *** *** *** ***

              **************
              *            *
125 KK        *    CPHV3   *
              *            *
              **************
                    COMBINE ROUTED FLOWS FROM SUB-BASIN WC20B AND  COMPUTATION POINT CPHV3

127 HC             HYDROGRAPH COMBINATION
                        ICOMP          2  NUMBER OF HYDROGRAPHS TO COMBINE

                                              ***

     ***          ***          ***          ***          ***

                    HYDROGRAPH AT STATION    CPHV3

  PEAK FLOW      TIME                        MAXIMUM AVERAGE FLOW
                                      6-HR        24-HR       72-HR     24.92-HR
+   (CFS)        (HR)
                             (CFS)
+     528.      12.17                  70.         20.         20.         20.
                           (INCHES)  1.615       1.877       1.878       1.878
                            (AC-FT)    35.         40.         40.         40.

                    CUMULATIVE AREA =     .40 SQ MI


*** *** *** *** *** *** *** *** *** *** *** *** *** *** *** *** *** *** *** *** *** *** *** *** *** *** *** *** *** *** *** *** *** ***

              **************
              *            *
128 KK        *    RRHV9   *
              *            *
              **************
                    ROUTE FLOW FROM COMPUTATION CPHV3 TO COMPUTATION POINT CPHV4
```

```
                    HYDROGRAPH ROUTING DATA

 130 RS               STORAGE ROUTING
                           NSTPS           1  NUMBER OF SUBREACHES
                            ITYP        ELEV  TYPE OF INITIAL CONDITION
                          RSVRIC     1121.00  INITIAL CONDITION
                               X         .00 WORKING R AND D COEFFICIENT

 131 RC               NORMAL DEPTH CHANNEL
                             ANL        .035  LEFT OVERBANK N-VALUE
                            ANCH        .040  MAIN CHANNEL N-VALUE
                             ANR        .035  RIGHT OVERBANK N-VALUE
                           RLNTH        780.  REACH LENGTH
                             SEL       .0080  ENERGY SLOPE
                           ELMAX      1126.0  MAX. ELEV. FOR STORAGE/OUTFLOW CALCULATION

                                              CROSS-SECTION DATA
                             --- LEFT OVERBANK --- + ------ MAIN CHANNEL ------- + --- RIGHT OVERBANK ---
 133 RY           ELEVATION  1126.00  1124.00  1122.00  1121.00  1121.00  1122.00  1124.00  1126.00
 132 RX            DISTANCE      .00   100.00   130.00   150.00   165.00   180.00   290.00   350.00

                                                      ***

                                            COMPUTED STORAGE-OUTFLOW-ELEVATION DATA

              STORAGE        .00        .09        .23        .41        .63        .93       1.31       1.78       2.34       2.98
              OUTFLOW        .00       6.13      22.31      49.84      92.49     161.00     254.31     377.48     534.88     730.49
            ELEVATION    1121.00    1121.26    1121.53    1121.79    1122.05    1122.32    1122.58    1122.84    1123.11    1123.37

              STORAGE       3.71       4.53       5.44       6.44       7.54       8.75      10.05      11.45      12.95      14.55
              OUTFLOW     968.08    1251.19    1581.53    1969.77    2419.00    2931.29    3509.54    4156.90    4876.58    5672.07
            ELEVATION    1123.63    1123.90    1124.16    1124.42    1124.68    1124.95    1125.21    1125.47    1125.74    1126.00

*** WARNING *** MODIFIED PULS ROUTING MAY BE NUMERICALLY UNSTABLE FOR OUTFLOWS BETWEEN      535. TO      5672.
                THE ROUTED HYDROGRAPH SHOULD BE EXAMINED FOR OSCILLATIONS OR OUTFLOWS GREATER THAN PEAK INFLOWS.
                THIS CAN BE CORRECTED BY DECREASING THE TIME INTERVAL OR INCREASING STORAGE (USE A LONGER REACH.)

       ***            ***            ***            ***            ***

                      HYDROGRAPH AT STATION     RRHV9

  PEAK FLOW      TIME                          MAXIMUM AVERAGE FLOW
                                       6-HR        24-HR        72-HR      24.92-HR
+   (CFS)        (HR)
                             (CFS)
+      523.      12.17                  70.          20.          20.          20.
                          (INCHES)   1.615        1.876        1.878        1.878
                           (AC-FT)     35.          40.          40.          40.

 PEAK STORAGE    TIME                         MAXIMUM AVERAGE STORAGE
                                       6-HR        24-HR        72-HR      24.92-HR
+  (AC-FT)       (HR)
          2.     12.17                   0.           0.           0.           0.

  PEAK STAGE     TIME                          MAXIMUM AVERAGE STAGE
                                       6-HR        24-HR        72-HR      24.92-HR
+   (FEET)       (HR)
   1123.09       12.17              1121.64      1121.28      1121.27      1121.27

                         CUMULATIVE AREA =       .40 SQ MI


*** *** *** *** *** *** *** *** *** *** *** *** *** *** *** *** *** *** *** *** *** *** *** *** *** *** *** *** *** *** *** *** *** ***


                ***************
                *             *
 134 KK         *     WC21B   *
                *             *
                ***************
                              SUB-BASIN WC21B -LAND USE - NATURAL DESERT HILLSLOPES,MINOR DEVELOPMENT
                              24-HOUR TYPE II RAINFALL WAS USED TO FIND TC & R FOR THIS BASIN
                              THIS BASIN USED RAINFALL REDUCTION FACTOR OF .97

                    SUBBASIN RUNOFF DATA

 138 BA              SUBBASIN CHARACTERISTICS
                          TAREA          .02  SUBBASIN AREA

                     PRECIPITATION DATA

  16 PB                   STORM         4.07  BASIN TOTAL PRECIPITATION

  16 PI                INCREMENTAL PRECIPITATION PATTERN
                          .00       .00       .00       .00       .00       .00       .00       .00       .00       .00
                          .00       .00       .00       .00       .00       .00       .00       .00       .00       .00
                          .00       .00       .00       .00       .00       .00       .00       .00       .00       .00
                          .00       .00       .00       .00       .00       .00       .00       .00       .00       .00
                          .00       .00       .00       .00       .00       .00       .00       .00       .00       .00
                          .00       .00       .00       .00       .00       .00       .00       .00       .00       .00
                          .00       .00       .00       .00       .00       .00       .00       .00       .00       .00
                          .00       .00       .00       .00       .00       .00       .00       .00       .00       .00
```



```
                          .00       .00       .00       .00       .00       .00       .00       .00       .00       .00
                          .00       .00       .00       .00       .00       .00       .00       .00       .00       .00
                          .00       .00       .00       .00       .00       .00       .00       .00       .00       .00
                          .00       .00       .00       .00       .00       .00       .00       .00       .00       .00
                          .00       .00       .00       .00       .00       .00       .01       .01       .01       .01
                          .01       .01       .01       .01       .01       .01       .01       .01       .06       .06
                          .06       .06       .06       .06       .01       .01       .01       .01       .01       .01
                          .01       .01       .01       .01       .01       .01       .00       .00       .00       .00
                          .00       .00       .00       .00       .00       .00       .00       .00       .00       .00
                          .00       .00       .00       .00       .00       .00       .00       .00       .00       .00
                          .00       .00       .00       .00       .00       .00       .00       .00       .00       .00
                          .00       .00       .00       .00       .00       .00       .00       .00       .00       .00
                          .00       .00       .00       .00       .00       .00       .00       .00       .00       .00
                          .00       .00       .00       .00       .00       .00       .00       .00       .00       .00
                          .00       .00       .00       .00       .00       .00       .00       .00       .00       .00
                          .00       .00       .00       .00       .00       .00       .00       .00       .00       .00
                          .00       .00       .00       .00       .00       .00       .00       .00       .00       .00
                          .00       .00       .00       .00       .00       .00       .00       .00       .00       .00
                          .00       .00       .00       .00       .00       .00       .00       .00       .00       .00
                          .00       .00       .00       .00       .00       .00       .00       .00       .00       .00
                          .00       .00       .00       .00       .00       .00       .00       .00

 139 LG              GREEN AND AMPT LOSS RATE
                          STRTL          .15  STARTING LOSS
                            DTH          .26  MOISTURE DEFICIT
                           PSIF         4.10  WETTING FRONT SUCTION
                          XKSAT          .24  HYDRAULIC CONDUCTIVITY
                          RTIMP          .00  PERCENT IMPERVIOUS AREA

 140 UC              CLARK UNITGRAPH
                             TC          .28  TIME OF CONCENTRATION
                              R          .38  STORAGE COEFFICIENT

 141 UA              ACCUMULATED-AREA VS. TIME,  11 ORDINATES
                         .0        3.0        5.0        8.0       12.0       20.0       43.0       75.0       90.0       96.0
                      100.0

                                                      ***

                                              UNIT HYDROGRAPH PARAMETERS
                                        CLARK   TC=    .28 HR,        R=   .38 HR
                                       SNYDER   TP=    .29 HR,       CP=   .57

                                                   UNIT HYDROGRAPH
                                              27 END-OF-PERIOD ORDINATES
                    1.         9.        23.        29.        24.        20.        16.        13.        10.         8.
                    7.         5.         4.         3.         3.         2.         2.         1.         1.         1.
                    1.         1.         0.         0.         0.         0.         0.

       ***            ***            ***            ***            ***

                      HYDROGRAPH AT STATION     WC21B

     TOTAL RAINFALL =     4.07, TOTAL LOSS =     2.68, TOTAL EXCESS =     1.40

  PEAK FLOW      TIME                          MAXIMUM AVERAGE FLOW
                                       6-HR        24-HR        72-HR      24.92-HR
+   (CFS)        (HR)
                             (CFS)
+       27.      12.17                   4.           1.           1.           1.
                          (INCHES)   1.389        1.389        1.389        1.389
                           (AC-FT)      2.           2.           2.           2.

                         CUMULATIVE AREA =       .02 SQ MI


*** *** *** *** *** *** *** *** *** *** *** *** *** *** *** *** *** *** *** *** *** *** *** *** *** *** *** *** *** *** *** *** *** ***


                ***************
                *             *
 143 KK         *    RRHV10   *
                *             *
                ***************
                              ROUTE FLOW FROM SUB-BASIN WC21B TO COMPUTATION POINT CPHV4

                    HYDROGRAPH ROUTING DATA

 145 RS               STORAGE ROUTING
                           NSTPS           2  NUMBER OF SUBREACHES
                            ITYP        ELEV  TYPE OF INITIAL CONDITION
                          RSVRIC     1129.00  INITIAL CONDITION
                               X         .00 WORKING R AND D COEFFICIENT

 146 RC               NORMAL DEPTH CHANNEL
                             ANL        .035  LEFT OVERBANK N-VALUE
                            ANCH        .035  MAIN CHANNEL N-VALUE
                             ANR        .035  RIGHT OVERBANK N-VALUE
                           RLNTH       1110.  REACH LENGTH
                             SEL       .0220  ENERGY SLOPE
                           ELMAX      1130.0  MAX. ELEV. FOR STORAGE/OUTFLOW CALCULATION

                                              CROSS-SECTION DATA
                             --- LEFT OVERBANK --- + ------ MAIN CHANNEL ------- + --- RIGHT OVERBANK ---
```

```
148 RY       ELEVATION  1130.00  1129.75  1129.50  1129.00  1129.00  1129.50  1129.75  1130.00
147 RX       DISTANCE       .00    25.00    50.00    75.00   100.00   125.00   175.00   200.00

                                          ***

                                COMPUTED STORAGE-OUTFLOW-ELEVATION DATA

          STORAGE       .00      .04      .08      .13      .19      .26      .33      .41      .49      .59
          OUTFLOW       .00     1.21     4.03     8.29    14.05    21.35    30.30    40.98    53.47    67.88
        ELEVATION   1129.00  1129.05  1129.11  1129.16  1129.21  1129.26  1129.32  1129.37  1129.42  1129.47

          STORAGE       .69      .81      .95     1.12     1.30     1.51     1.73     1.96     2.21     2.47
          OUTFLOW     86.09   108.73   134.67   164.38   198.28   237.20   280.92   329.38   382.72   441.09
        ELEVATION   1129.53  1129.58  1129.63  1129.68  1129.74  1129.79  1129.84  1129.89  1129.95  1130.00

*** WARNING *** MODIFIED PULS ROUTING MAY BE NUMERICALLY UNSTABLE FOR OUTFLOWS BETWEEN       53. TO      441.
                THE ROUTED HYDROGRAPH SHOULD BE EXAMINED FOR OSCILLATIONS OR OUTFLOWS GREATER THAN PEAK INFLOWS.
                THIS CAN BE CORRECTED BY DECREASING THE TIME INTERVAL OR INCREASING STORAGE (USE A LONGER REACH.)

     ***           ***           ***           ***           ***

                              HYDROGRAPH AT STATION   RRHV10

 PEAK FLOW     TIME                          MAXIMUM AVERAGE FLOW
                                    6-HR        24-HR        72-HR       24.92-HR
+   (CFS)      (HR)
                          (CFS)
+     26.     12.25                4.           1.           1.           1.
                        (INCHES)  1.389        1.389        1.389        1.389
                        (AC-FT)      2.           2.           2.           2.

 PEAK STORAGE  TIME                          MAXIMUM AVERAGE STORAGE
                                    6-HR        24-HR        72-HR       24.92-HR
+ (AC-FT)      (HR)
        0.     12.25                0.           0.           0.           0.

 PEAK STAGE    TIME                          MAXIMUM AVERAGE STAGE
                                    6-HR        24-HR        72-HR       24.92-HR
+   (FEET)     (HR)
  1129.29     12.25          1129.06      1129.01      1129.01      1129.01

                        CUMULATIVE AREA =     .02 SQ MI

*** *** *** *** *** *** *** *** *** *** *** *** *** *** *** *** *** *** *** *** *** *** *** *** *** *** *** *** *** *** *** *** *** *** *** *** ***

          +++++++++++++++
          +             +
149 KK    +     PM4B    +
          +             +
          +++++++++++++++
                SUB-BASIN PM4B -LAND USE - NATURAL DESERT HILLSLOPES,MINOR DEVELOPMENT
                24-HOUR TYPE II RAINFALL WAS USED TO FIND TC & R FOR THIS BASIN
                THIS BASIN USED RAINFALL REDUCTION FACTOR OF .97

          SUBBASIN RUNOFF DATA

153 BA      SUBBASIN CHARACTERISTICS
              TAREA         .14  SUBBASIN AREA

            PRECIPITATION DATA

 16 PB        STORM        4.07  BASIN TOTAL PRECIPITATION

 16 PI      INCREMENTAL PRECIPITATION PATTERN
              .00   .00   .00   .00   .00   .00   .00   .00   .00   .00
              .00   .00   .00   .00   .00   .00   .00   .00   .00   .00
              .00   .00   .00   .00   .00   .00   .00   .00   .00   .00
              .00   .00   .00   .00   .00   .00   .00   .00   .00   .00
              .00   .00   .00   .00   .00   .00   .00   .00   .00   .00
              .00   .00   .00   .00   .00   .00   .00   .00   .00   .00
              .00   .00   .00   .00   .00   .00   .00   .00   .00   .00
              .00   .00   .00   .00   .00   .00   .00   .00   .00   .00
              .00   .00   .00   .00   .00   .00   .00   .00   .00   .00
              .00   .00   .00   .00   .00   .00   .00   .00   .00   .00
              .00   .00   .00   .00   .00   .00   .00   .00   .00   .00
              .00   .00   .00   .00   .00   .00   .00   .00   .00   .00
              .00   .00   .00   .00   .00   .00   .01   .01   .01   .01
              .01   .01   .01   .01   .01   .01   .01   .01   .06   .06
              .06   .06   .06   .06   .01   .01   .01   .01   .01   .01
              .01   .01   .01   .01   .01   .01   .00   .00   .00   .00
              .00   .00   .00   .00   .00   .00   .00   .00   .00   .00
              .00   .00   .00   .00   .00   .00   .00   .00   .00   .00
              .00   .00   .00   .00   .00   .00   .00   .00   .00   .00
              .00   .00   .00   .00   .00   .00   .00   .00   .00   .00
              .00   .00   .00   .00   .00   .00   .00   .00   .00   .00
              .00   .00   .00   .00   .00   .00   .00   .00   .00   .00
              .00   .00   .00   .00   .00   .00   .00   .00   .00   .00
              .00   .00   .00   .00   .00   .00   .00   .00   .00   .00
              .00   .00   .00   .00   .00   .00   .00   .00   .00   .00
              .00   .00   .00   .00   .00   .00   .00   .00   .00   .00
```



```
              .00   .00   .00   .00   .00   .00   .00   .00   .00   .00
              .00   .00   .00   .00   .00   .00   .00   .00

154 LG      GREEN AND AMPT LOSS RATE
              STRTL         .15  STARTING LOSS
               DTH          .33  MOISTURE DEFICIT
               PSIF        3.45  WETTING FRONT SUCTION
              XKSAT         .76  HYDRAULIC CONDUCTIVITY
              RTIMP       15.00  PERCENT IMPERVIOUS AREA

155 UC      CLARK UNITGRAPH
               TC           .28  TIME OF CONCENTRATION
                R           .19  STORAGE COEFFICIENT

156 UA      ACCUMULATED-AREA VS. TIME,  11 ORDINATES
               .0     3.0     5.0     8.0    12.0    20.0    43.0    75.0    90.0    96.0
            100.0

                                          ***

                                UNIT HYDROGRAPH PARAMETERS
                              CLARK   TC=   .28 HR,       R=   .19 HR
                              SNYDER  TP=   .26 HR,      CP=   .78

                                    UNIT HYDROGRAPH
                                14 END-OF-PERIOD ORDINATES
                      15.     89.    228.    263.    177.    113.     72.     46.     29.     19.
                      12.      8.      5.      3.

     ***           ***           ***           ***           ***

                              HYDROGRAPH AT STATION     PM4B

     TOTAL RAINFALL =   4.07, TOTAL LOSS =   2.75, TOTAL EXCESS =   1.33

 PEAK FLOW     TIME                          MAXIMUM AVERAGE FLOW
                                    6-HR        24-HR        72-HR       24.92-HR
+   (CFS)      (HR)
                          (CFS)
+     151.    12.08               17.           5.           5.           5.
                        (INCHES)  1.143        1.321        1.322        1.322
                        (AC-FT)      9.          10.          10.          10.

                        CUMULATIVE AREA =     .14 SQ MI

*** *** *** *** *** *** *** *** *** *** *** *** *** *** *** *** *** *** *** *** *** *** *** *** *** *** *** *** *** *** *** *** *** *** *** *** ***

          +++++++++++++++
          +             +
158 KK    +     CPHV4   +
          +             +
          +++++++++++++++
                COMBINE ROUTED FLOWS FROM SUB-BASINS WC21B PM4B AND  COMPUTATION POINT CPHV4

160 HC      HYDROGRAPH COMBINATION
              ICOMP           3  NUMBER OF HYDROGRAPHS TO COMBINE

                                          ***

     ***           ***           ***           ***           ***

                              HYDROGRAPH AT STATION     CPHV4

 PEAK FLOW     TIME                          MAXIMUM AVERAGE FLOW
                                    6-HR        24-HR        72-HR       24.92-HR
+   (CFS)      (HR)
                          (CFS)
+     695.    12.17               91.          26.          25.          25.
                        (INCHES)  1.489        1.718        1.720        1.720
                        (AC-FT)     45.          52.          52.          52.

                        CUMULATIVE AREA =     .57 SQ MI

*** *** *** *** *** *** *** *** *** *** *** *** *** *** *** *** *** *** *** *** *** *** *** *** *** *** *** *** *** *** *** *** *** *** *** *** ***

          +++++++++++++++
          +             +
161 KK    +    RRHV11   +
          +             +
          +++++++++++++++
                ROUTE FLOW FROM COMPUTATION CPHV4 TO COMPUTATION POINT CPHV5

          HYDROGRAPH ROUTING DATA

163 RS      STORAGE ROUTING
              NSTPS           1  NUMBER OF SUBREACHES
               ITYP        ELEV  TYPE OF INITIAL CONDITION
             RSVRIC     1116.00  INITIAL CONDITION
```

STORAGE	.00	.07	.14	.22	.30	.40	.50	.61	.72	.84
OUTFLOW	.00	2.17	7.18	14.65	24.54	36.86	51.67	69.04	89.02	111.72
ELEVATION	1123.50	1123.55	1123.61	1123.66	1123.71	1123.76	1123.82	1123.87	1123.92	1123.97
STORAGE	.97	1.11	1.25	1.40	1.56	1.73	1.90	2.08	2.26	2.46
OUTFLOW	137.21	165.61	197.01	231.46	269.05	309.86	353.96	401.44	452.38	506.86
ELEVATION	1124.03	1124.08	1124.13	1124.18	1124.24	1124.29	1124.34	1124.39	1124.45	1124.50

*** WARNING *** MODIFIED PULS ROUTING MAY BE NUMERICALLY UNSTABLE FOR OUTFLOWS BETWEEN 15. TO 507.
THE ROUTED HYDROGRAPH SHOULD BE EXAMINED FOR OSCILLATIONS OR OUTFLOWS GREATER THAN PEAK INFLOWS.
THIS CAN BE CORRECTED BY DECREASING THE TIME INTERVAL OR INCREASING STORAGE (USE A LONGER REACH.)

*** *** *** ***

HYDROGRAPH AT STATION RRHV12

PEAK FLOW	TIME	MAXIMUM AVERAGE FLOW			
		6-HR	24-HR	72-HR	24.92-HR
+ (CFS)	(HR)				
	(CFS)				
+ 9.	12.25	1.	0.	0.	0.
	(INCHES)	1.431	1.431	1.431	1.431
	(AC-FT)	1.	1.	1.	1.

PEAK STORAGE	TIME	MAXIMUM AVERAGE STORAGE			
		6-HR	24-HR	72-HR	24.92-HR
+ (AC-FT)	(HR)				
0.	12.17	0.	0.	0.	0.

PEAK STAGE	TIME	MAXIMUM AVERAGE STAGE			
		6-HR	24-HR	72-HR	24.92-HR
+ (FEET)	(HR)				
1123.62	12.25	1123.52	1123.50	1123.50	1123.50

CUMULATIVE AREA = .01 SQ MI

*** ***

182 KK CPHV5

COMBINE ROUTED FLOWS FROM SUB-BASIN WC22B AND COMPUTATION POINT CPHV4

184 HC HYDROGRAPH COMBINATION
ICOMP 2 NUMBER OF HYDROGRAPHS TO COMBINE

*** *** *** ***

HYDROGRAPH AT STATION CPHV5

PEAK FLOW	TIME	MAXIMUM AVERAGE FLOW			
		6-HR	24-HR	72-HR	24.92-HR
+ (CFS)	(HR)				
	(CFS)				
+ 700.	12.17	92.	26.	25.	25.
	(INCHES)	1.488	1.714	1.716	1.716
	(AC-FT)	45.	52.	52.	52.

CUMULATIVE AREA = .57 SQ MI

*** ***

185 KK RRHV13

ROUTE FLOW FROM COMPUTATION CPHV5 TO COMPUTATION POINT CPHV6

HYDROGRAPH ROUTING DATA

187 RS STORAGE ROUTING
NSTPS 1 NUMBER OF SUBREACHES
ITYP ELEV TYPE OF INITIAL CONDITION
RSVRIC 1114.00 INITIAL CONDITION
X .00 WORKING R AND D COEFFICIENT

188 RC NORMAL DEPTH CHANNEL
ANL .035 LEFT OVERBANK N-VALUE
ANCH .040 MAIN CHANNEL N-VALUE
ANR .035 RIGHT OVERBANK N-VALUE
RLNTH 430. REACH LENGTH
SEL .0050 ENERGY SLOPE

ELMAX 1116.0 MAX. ELEV. FOR STORAGE/OUTFLOW CALCULATION

CROSS-SECTION DATA

		--- LEFT OVERBANK ---	+	------ MAIN CHANNEL -------	+	--- RIGHT OVERBANK ---		
190 RY	ELEVATION	1117.00	1116.00	1116.00	1114.00	1114.00	1115.00	1115.00	1116.00
189 RX	DISTANCE	.00	70.00	130.00	160.00	180.00	220.00	340.00	410.00

***

COMPUTED STORAGE-OUTFLOW-ELEVATION DATA

STORAGE	.00	.02	.05	.09	.13	.18	.23	.29	.36	.43
OUTFLOW	.00	1.31	4.42	9.27	15.96	24.64	35.44	48.52	64.03	82.11
ELEVATION	1114.00	1114.11	1114.21	1114.32	1114.42	1114.53	1114.63	1114.74	1114.84	1114.95
STORAGE	.57	.78	1.00	1.23	1.47	1.72	1.98	2.25	2.53	2.81
OUTFLOW	107.25	148.35	200.99	264.03	336.94	419.44	511.41	612.79	723.56	843.78
ELEVATION	1115.05	1115.16	1115.26	1115.37	1115.47	1115.58	1115.68	1115.79	1115.89	1116.00

*** WARNING *** MODIFIED PULS ROUTING MAY BE NUMERICALLY UNSTABLE FOR OUTFLOWS BETWEEN 264. TO 844.
THE ROUTED HYDROGRAPH SHOULD BE EXAMINED FOR OSCILLATIONS OR OUTFLOWS GREATER THAN PEAK INFLOWS.
THIS CAN BE CORRECTED BY DECREASING THE TIME INTERVAL OR INCREASING STORAGE (USE A LONGER REACH.)

*** *** *** ***

HYDROGRAPH AT STATION RRHV13

PEAK FLOW	TIME	MAXIMUM AVERAGE FLOW			
		6-HR	24-HR	72-HR	24.92-HR
+ (CFS)	(HR)				
	(CFS)				
+ 686.	12.17	92.	26.	25.	25.
	(INCHES)	1.488	1.714	1.715	1.715
	(AC-FT)	45.	52.	52.	52.

PEAK STORAGE	TIME	MAXIMUM AVERAGE STORAGE			
		6-HR	24-HR	72-HR	24.92-HR
+ (AC-FT)	(HR)				
2.	12.17	0.	0.	0.	0.

PEAK STAGE	TIME	MAXIMUM AVERAGE STAGE			
		6-HR	24-HR	72-HR	24.92-HR
+ (FEET)	(HR)				
1115.86	12.17	1114.65	1114.32	1114.31	1114.31

CUMULATIVE AREA = .57 SQ MI

*** ***

191 KK WC23B

SUB-BASIN WC23B -LAND USE - DESERT MOUNTAIN,DESERT HILLS;MINOR DEVELOPMENT
24-HOUR TYPE II RAINFALL WAS USED TO FIND TC & R FOR THIS BASIN
THIS BASIN USED RAINFALL REDUCTION FACTOR OF .97

SUBBASIN RUNOFF DATA

195 BA SUBBASIN CHARACTERISTICS
TAREA .40 SUBBASIN AREA

PRECIPITATION DATA

16 PB STORM 4.07 BASIN TOTAL PRECIPITATION

16 PI INCREMENTAL PRECIPITATION PATTERN

.00	.00	.00	.00	.00	.00	.00	.00	.00	.00
.00	.00	.00	.00	.00	.00	.00	.00	.00	.00
.00	.00	.00	.00	.00	.00	.00	.00	.00	.00
.00	.00	.00	.00	.00	.00	.00	.00	.00	.00
.00	.00	.00	.00	.00	.00	.00	.00	.00	.00
.00	.00	.00	.00	.00	.00	.00	.00	.00	.00
.00	.00	.00	.00	.00	.00	.00	.00	.00	.00
.00	.00	.00	.00	.00	.00	.00	.00	.00	.00
.00	.00	.00	.00	.00	.00	.00	.00	.00	.00
.00	.00	.00	.00	.00	.00	.00	.00	.00	.00
.00	.00	.00	.00	.00	.00	.00	.00	.00	.00
.00	.00	.00	.00	.00	.00	.00	.00	.00	.00
.00	.00	.00	.00	.00	.00	.01	.01	.01	.01
.01	.01	.01	.01	.01	.01	.01	.01	.06	.06
.06	.06	.06	.06	.01	.01	.01	.01	.01	.01
.01	.01	.01	.01	.01	.01	.00	.00	.00	.00
.00	.00	.00	.00	.00	.00	.00	.00	.00	.00
.00	.00	.00	.00	.00	.00	.00	.00	.00	.00
.00	.00	.00	.00	.00	.00	.00	.00	.00	.00
.00	.00	.00	.00	.00	.00	.00	.00	.00	.00
.00	.00	.00	.00	.00	.00	.00	.00	.00	.00
.00	.00	.00	.00	.00	.00	.00	.00	.00	.00

```
                    CUMULATIVE AREA =       .09 SQ MI


*** *** *** *** *** *** *** *** *** *** *** *** *** *** *** *** *** *** *** *** *** *** *** *** *** *** *** *** *** *** *** *** *** ***

           **************
           *            *
 248 KK    *   RRHV17   *
           *            *
           **************
                    ROUTE FLOW FROM SUB-BASIN A43A2B TO COMPUTATION POINT CPHV8

             HYDROGRAPH ROUTING DATA

 250 RS        STORAGE ROUTING
                    NSTPS          1  NUMBER OF SUBREACHES
                     ITYP       ELEV  TYPE OF INITIAL CONDITION
                   RSVRIC    1099.00  INITIAL CONDITION
                        X        .00 WORKING R AND D COEFFICIENT

 251 RC        NORMAL DEPTH CHANNEL
                      ANL       .065  LEFT OVERBANK N-VALUE
                     ANCH       .065  MAIN CHANNEL N-VALUE
                      ANR       .065  RIGHT OVERBANK N-VALUE
                    RLNTH       440.  REACH LENGTH
                      SEL      .0150  ENERGY SLOPE
                    ELMAX     1100.0  MAX. ELEV. FOR STORAGE/OUTFLOW CALCULATION

                                      CROSS-SECTION DATA
                           --- LEFT OVERBANK --- + ------ MAIN CHANNEL ------- + --- RIGHT OVERBANK ---
 253 RY        ELEVATION  1100.00  1099.00  1099.00  1099.00  1099.00  1099.00  1099.00  1100.00
 252 RX         DISTANCE      .00   105.00   135.00   165.00   190.00   210.00   260.00   320.00

                                                     ***

                                         COMPUTED STORAGE-OUTFLOW-ELEVATION DATA

           STORAGE       .00        .08        .17        .27        .37        .47        .58        .69        .81        .93
           OUTFLOW       .00       3.25      10.43      20.76      33.96      49.93      68.58      89.89     113.86     140.49
         ELEVATION   1099.00    1099.05    1099.11    1099.16    1099.21    1099.26    1099.32    1099.37    1099.42    1099.47

           STORAGE      1.05       1.19       1.32       1.46       1.61       1.75       1.91       2.07       2.23       2.40
           OUTFLOW    169.79     201.78     236.50     273.97     314.23     357.30     403.24     452.07     503.84     558.59
         ELEVATION   1099.53    1099.58    1099.63    1099.68    1099.74    1099.79    1099.84    1099.89    1099.95    1100.00

*** WARNING *** MODIFIED PULS ROUTING MAY BE NUMERICALLY UNSTABLE FOR OUTFLOWS BETWEEN       357. TO       559.
                THE ROUTED HYDROGRAPH SHOULD BE EXAMINED FOR OSCILLATIONS OR OUTFLOWS GREATER THAN PEAK INFLOWS.
                THIS CAN BE CORRECTED BY DECREASING THE TIME INTERVAL OR INCREASING STORAGE (USE A LONGER REACH.)

      ***             ***             ***             ***             ***

                    HYDROGRAPH AT STATION    RRHV17

  PEAK FLOW      TIME                           MAXIMUM AVERAGE FLOW
                                     6-HR        24-HR        72-HR       24.92-HR
+    (CFS)       (HR)
                            (CFS)
+      123.     12.17                  18.           5.           5.            5.
                          (INCHES)    1.844        2.199        2.201         2.201
                           (AC-FT)       9.          11.          11.           11.

 PEAK STORAGE    TIME                          MAXIMUM AVERAGE STORAGE
                                     6-HR        24-HR        72-HR       24.92-HR
+  (AC-FT)       (HR)
          1.    12.17                    0.           0.           0.            0.

  PEAK STAGE     TIME                           MAXIMUM AVERAGE STAGE
                                     6-HR        24-HR        72-HR       24.92-HR
+    (FEET)      (HR)
    1099.44     12.17               1099.11      1099.04      1099.04       1099.04

                    CUMULATIVE AREA =       .09 SQ MI


*** *** *** *** *** *** *** *** *** *** *** *** *** *** *** *** *** *** *** *** *** *** *** *** *** *** *** *** *** *** *** *** *** ***

           **************
           *            *
 254 KK    *   RRHV18   *
           *            *
           **************
                    ROUTE FLOW FROM COMPUTATION CPHV8 TO COMPUTATION POINT CPHV10

             HYDROGRAPH ROUTING DATA

 256 RS        STORAGE ROUTING
                    NSTPS          3  NUMBER OF SUBREACHES
                     ITYP       ELEV  TYPE OF INITIAL CONDITION
                   RSVRIC    1086.00  INITIAL CONDITION
```



```
                        X        .00 WORKING R AND D COEFFICIENT

 257 RC        NORMAL DEPTH CHANNEL
                      ANL       .065  LEFT OVERBANK N-VALUE
                     ANCH       .065  MAIN CHANNEL N-VALUE
                      ANR       .065  RIGHT OVERBANK N-VALUE
                    RLNTH      2200.  REACH LENGTH
                      SEL      .0080  ENERGY SLOPE
                    ELMAX     1088.0  MAX. ELEV. FOR STORAGE/OUTFLOW CALCULATION

                                      CROSS-SECTION DATA
                           --- LEFT OVERBANK --- + ------ MAIN CHANNEL ------- + --- RIGHT OVERBANK ---
 259 RY        ELEVATION  1088.00  1086.00  1086.00  1086.00  1086.00  1086.00  1086.00  1088.00
 258 RX         DISTANCE      .00    80.00   200.00   300.00   360.00   440.00   550.00   610.00

                                                     ***

                                         COMPUTED STORAGE-OUTFLOW-ELEVATION DATA

           STORAGE       .00       2.52       5.07       7.67      10.30      12.98      15.69      18.44      21.23      24.07
           OUTFLOW       .00      22.66      72.14     142.22     230.40     335.23     455.71     591.12     740.91     904.66
         ELEVATION   1086.00    1086.11    1086.21    1086.32    1086.42    1086.53    1086.63    1086.74    1086.84    1086.95

           STORAGE     26.93      29.84      32.79      35.78      38.80      41.87      44.97      48.12      51.30      54.52
           OUTFLOW   1082.02    1272.72    1476.53    1693.26    1922.77    2164.93    2419.63    2686.78    2966.31    3258.17
         ELEVATION   1087.05    1087.16    1087.26    1087.37    1087.47    1087.58    1087.68    1087.79    1087.89    1088.00

      ***             ***             ***             ***             ***

                    HYDROGRAPH AT STATION    RRHV18

  PEAK FLOW      TIME                           MAXIMUM AVERAGE FLOW
                                     6-HR        24-HR        72-HR       24.92-HR
+    (CFS)       (HR)
                            (CFS)
+       71.     12.75                  18.           5.           5.            5.
                          (INCHES)    1.836        2.186        2.186         2.186
                           (AC-FT)       9.          10.          10.           10.

 PEAK STORAGE    TIME                          MAXIMUM AVERAGE STORAGE
                                     6-HR        24-HR        72-HR       24.92-HR
+  (AC-FT)       (HR)
          2.    12.75                    1.           0.           0.            0.

  PEAK STAGE     TIME                           MAXIMUM AVERAGE STAGE
                                     6-HR        24-HR        72-HR       24.92-HR
+    (FEET)      (HR)
    1086.21     12.75               1086.07      1086.02      1086.02       1086.02

                    CUMULATIVE AREA =       .09 SQ MI


*** *** *** *** *** *** *** *** *** *** *** *** *** *** *** *** *** *** *** *** *** *** *** *** *** *** *** *** *** *** *** *** *** ***

           **************
           *            *
 260 KK    *   NWSM1B   *
           *            *
           **************
                    SUB-BASIN NWSM1B -LAND USE - DESERT MOUNTAIN;UNDEVELOPED
                    24-HOUR TYPE II RAINFALL WAS USED TO FIND TC & R FOR THIS BASIN
                    THIS BASIN USED RAINFALL REDUCTION FACTOR OF .97

             SUBBASIN RUNOFF DATA

 264 BA        SUBBASIN CHARACTERISTICS
                    TAREA         .13  SUBBASIN AREA

               PRECIPITATION DATA

  16 PB             STORM        4.07  BASIN TOTAL PRECIPITATION

  16 PI           INCREMENTAL PRECIPITATION PATTERN
                    .00       .00       .00       .00       .00       .00       .00       .00       .00       .00
                    .00       .00       .00       .00       .00       .00       .00       .00       .00       .00
                    .00       .00       .00       .00       .00       .00       .00       .00       .00       .00
                    .00       .00       .00       .00       .00       .00       .00       .00       .00       .00
                    .00       .00       .00       .00       .00       .00       .00       .00       .00       .00
                    .00       .00       .00       .00       .00       .00       .00       .00       .00       .00
                    .00       .00       .00       .00       .00       .00       .00       .00       .00       .00
                    .00       .00       .00       .00       .00       .00       .00       .00       .00       .00
                    .00       .00       .00       .00       .00       .00       .00       .00       .00       .00
                    .00       .00       .00       .00       .00       .00       .00       .00       .00       .00
                    .00       .00       .00       .00       .00       .00       .00       .00       .00       .00
                    .00       .00       .00       .00       .00       .00       .00       .00       .00       .00
                    .00       .00       .00       .00       .00       .00       .01       .01       .01       .01
                    .01       .01       .01       .01       .01       .01       .01       .01       .06       .06
                    .06       .06       .06       .06       .01       .01       .01       .01       .01       .01
                    .01       .01       .01       .01       .01       .01       .00       .00       .00       .00
                    .00       .00       .00       .00       .00       .00       .00       .00       .00       .00
                    .00       .00       .00       .00       .00       .00       .00       .00       .00       .00
                    .00       .00       .00       .00       .00       .00       .00       .00       .00       .00
```

```
                  .00      .00      .00      .00      .00      .00      .00      .00      .00      .00
                  .00      .00      .00      .00      .00      .00      .00      .00      .00      .00
                  .00      .00      .00      .00      .00      .00      .00      .00      .00      .00
                  .00      .00      .00      .00      .00      .00      .00      .00      .00      .00
                  .00      .00      .00      .00      .00      .00      .00      .00      .00      .00
                  .00      .00      .00      .00      .00      .00      .00      .00      .00      .00
                  .00      .00      .00      .00      .00      .00      .00      .00      .00      .00
                  .00      .00      .00      .00      .00      .00      .00      .00      .00      .00
                  .00      .00      .00      .00      .00      .00      .00      .00      .00      .00
                  .00      .00      .00      .00      .00      .00      .00      .00

265 LG          GREEN AND AMPT LOSS RATE
                      STRTL          .15  STARTING LOSS
                        DTH          .34  MOISTURE DEFICIT
                       PSIF         2.50  WETTING FRONT SUCTION
                      XKSAT         1.14  HYDRAULIC CONDUCTIVITY
                      RTIMP        60.00  PERCENT IMPERVIOUS AREA

266 UC          CLARK UNITGRAPH
                         TC          .27  TIME OF CONCENTRATION
                          R          .23  STORAGE COEFFICIENT

267 UA          ACCUMULATED-AREA VS. TIME,  11 ORDINATES
                        .0       3.0       5.0       8.0      12.0      20.0      43.0      75.0      90.0      96.0
                     100.0

                                                    ***

                                          UNIT HYDROGRAPH PARAMETERS
                                    CLARK   TC=   .27 HR,        R=   .23 HR
                                   SNYDER   TP=   .25 HR,       CP=   .67

                                               UNIT HYDROGRAPH
                                          17 END-OF-PERIOD ORDINATES
             13.       89.      201.      215.      152.      105.       72.       50.       34.       24.
             16.       11.        8.        5.        4.        3.        2.

      ***             ***             ***             ***             ***

                         HYDROGRAPH AT STATION   NWSM1B

   TOTAL RAINFALL =     4.07, TOTAL LOSS =     1.38, TOTAL EXCESS =    2.70

 PEAK FLOW      TIME                        MAXIMUM AVERAGE FLOW
                                     6-HR       24-HR       72-HR     24.92-HR
+  (CFS)        (HR)
                          (CFS)
+    168.      12.08                  28.          9.          9.          9.
                        (INCHES)   1.972       2.683       2.687       2.687
                         (AC-FT)     14.         19.         19.         19.

                         CUMULATIVE AREA =     .13 SQ MI


*** *** *** *** *** *** *** *** *** *** *** *** *** *** *** *** *** *** *** *** *** *** *** *** *** *** *** *** *** *** *** *** ***

                *************
                *           *
269 KK          *   RR43B1  *
                *           *
                *************
                        ROUTE FLOW FROM SUB-BASIN NWSM1B TO COMPUTATION POINT CPHV9 (1ST REACH)

                HYDROGRAPH ROUTING DATA

271 RS              STORAGE ROUTING
                      NSTPS            1  NUMBER OF SUBREACHES
                       ITYP         ELEV  TYPE OF INITIAL CONDITION
                     RSVRIC      1168.00  INITIAL CONDITION
                          X          .00 WORKING R AND D COEFFICIENT

272 RC              NORMAL DEPTH CHANNEL
                        ANL         .035  LEFT OVERBANK N-VALUE
                       ANCH         .040  MAIN CHANNEL N-VALUE
                        ANR         .035  RIGHT OVERBANK N-VALUE
                      RLNTH        1850.  REACH LENGTH
                        SEL        .4700  ENERGY SLOPE
                      ELMAX       1172.0  MAX. ELEV. FOR STORAGE/OUTFLOW CALCULATION

                                              CROSS-SECTION DATA
                             --- LEFT OVERBANK --- + ------ MAIN CHANNEL ------- + --- RIGHT OVERBANK ---
274 RY          ELEVATION    1172.00   1171.50   1170.00   1168.00   1168.00   1170.00   1171.50   1172.00
273 RX          DISTANCE         .00     40.00    100.00    120.00    135.00    150.00    190.00    240.00

                                                    ***

                                   COMPUTED STORAGE-OUTFLOW-ELEVATION DATA

          STORAGE        .00       .15       .33       .55       .80      1.08      1.40      1.75      2.13      2.54
          OUTFLOW        .00     29.89     99.99    207.58    354.16    542.11    774.06   1052.76   1380.95   1761.35
        ELEVATION    1168.00   1168.21   1168.42   1168.63   1168.84   1169.05   1169.26   1169.47   1169.68   1169.90

          STORAGE       3.00      3.57      4.27      5.10      6.05      7.12      8.32      9.66     11.30     13.28
```



```
          OUTFLOW    2246.94   2862.01   3586.10   4440.05   5441.88   6608.00   7953.71   9398.53  11004.48  12977.42
        ELEVATION    1170.11   1170.32   1170.53   1170.74   1170.95   1171.16   1171.37   1171.58   1171.79   1172.00

*** WARNING *** MODIFIED PULS ROUTING MAY BE NUMERICALLY UNSTABLE FOR OUTFLOWS BETWEEN       30. TO    12977.
                THE ROUTED HYDROGRAPH SHOULD BE EXAMINED FOR OSCILLATIONS OR OUTFLOWS GREATER THAN PEAK INFLOWS.
                THIS CAN BE CORRECTED BY DECREASING THE TIME INTERVAL OR INCREASING STORAGE (USE A LONGER REACH.)

      ***             ***             ***             ***             ***

                         HYDROGRAPH AT STATION   RR43B1

 PEAK FLOW      TIME                        MAXIMUM AVERAGE FLOW
                                     6-HR       24-HR       72-HR     24.92-HR
+  (CFS)        (HR)
                          (CFS)
+    166.      12.17                  28.          9.          9.          9.
                        (INCHES)   1.972       2.683       2.687       2.687
                         (AC-FT)     14.         19.         19.         19.

PEAK STORAGE    TIME                       MAXIMUM AVERAGE STORAGE
                                     6-HR       24-HR       72-HR     24.92-HR
+ (AC-FT)       (HR)
       0.      12.08                   0.          0.          0.          0.

 PEAK STAGE     TIME                        MAXIMUM AVERAGE STAGE
                                     6-HR       24-HR       72-HR     24.92-HR
+  (FEET)       (HR)
  1168.55      12.17              1168.14     1168.05     1168.05     1168.05

                         CUMULATIVE AREA =     .13 SQ MI


*** *** *** *** *** *** *** *** *** *** *** *** *** *** *** *** *** *** *** *** *** *** *** *** *** *** *** *** *** *** *** *** ***

                *************
                *           *
275 KK          *   RR43B2  *
                *           *
                *************
                        ROUTE FLOW FROM SUB-BASIN NWSM1B TO COMPUTATION POINT CPHV9 ( 2ND REACH )

                HYDROGRAPH ROUTING DATA

277 RS              STORAGE ROUTING
                      NSTPS            2  NUMBER OF SUBREACHES
                       ITYP         ELEV  TYPE OF INITIAL CONDITION
                     RSVRIC      1118.00  INITIAL CONDITION
                          X          .00 WORKING R AND D COEFFICIENT

278 RC              NORMAL DEPTH CHANNEL
                        ANL         .035  LEFT OVERBANK N-VALUE
                       ANCH         .040  MAIN CHANNEL N-VALUE
                        ANR         .035  RIGHT OVERBANK N-VALUE
                      RLNTH        1000.  REACH LENGTH
                        SEL        .0340  ENERGY SLOPE
                      ELMAX       1120.0  MAX. ELEV. FOR STORAGE/OUTFLOW CALCULATION

                                              CROSS-SECTION DATA
                             --- LEFT OVERBANK --- + ------ MAIN CHANNEL ------- + --- RIGHT OVERBANK ---
280 RY          ELEVATION    1120.00   1119.00   1119.00   1118.00   1118.00   1118.00   1119.00   1120.00
279 RX          DISTANCE         .00     50.00    110.00    410.00    580.00    850.00    970.00   1160.00

                                                    ***

                                   COMPUTED STORAGE-OUTFLOW-ELEVATION DATA

          STORAGE        .00      1.12      2.34      3.67      5.11      6.65      8.30     10.06     11.92     13.89
          OUTFLOW        .00     72.51    235.62    474.24    784.53   1165.56   1617.70   2141.98   2739.87   3413.08
        ELEVATION    1118.00   1118.11   1118.21   1118.32   1118.42   1118.53   1118.63   1118.74   1118.84   1118.95

          STORAGE      16.03     18.32     20.66     23.07     25.53     28.06     30.65     33.30     36.01     38.78
          OUTFLOW    4210.94   5151.48   6187.65   7317.54   8540.33   9855.74  11263.79  12764.70  14358.86  16046.73
        ELEVATION    1119.05   1119.16   1119.26   1119.37   1119.47   1119.58   1119.68   1119.79   1119.89   1120.00

*** WARNING *** MODIFIED PULS ROUTING MAY BE NUMERICALLY UNSTABLE FOR OUTFLOWS BETWEEN      236. TO    16047.
                THE ROUTED HYDROGRAPH SHOULD BE EXAMINED FOR OSCILLATIONS OR OUTFLOWS GREATER THAN PEAK INFLOWS.
                THIS CAN BE CORRECTED BY DECREASING THE TIME INTERVAL OR INCREASING STORAGE (USE A LONGER REACH.)

      ***             ***             ***             ***             ***

                         HYDROGRAPH AT STATION   RR43B2

 PEAK FLOW      TIME                        MAXIMUM AVERAGE FLOW
                                     6-HR       24-HR       72-HR     24.92-HR
+  (CFS)        (HR)
                          (CFS)
+    161.      12.17                  28.          9.          9.          9.
                        (INCHES)   1.971       2.682       2.686       2.686
                         (AC-FT)     14.         19.         19.         19.

PEAK STORAGE    TIME                       MAXIMUM AVERAGE STORAGE
```

```
                                        6-HR        24-HR        72-HR      24.92-HR
+  (AC-FT)      (HR)
       1.      12.17                     0.           0.           0.           0.

  PEAK STAGE    TIME                              MAXIMUM AVERAGE STAGE
                                        6-HR        24-HR        72-HR      24.92-HR
+   (FEET)      (HR)
   1118.16     12.17                  1118.04     1118.01      1118.01      1118.01

                          CUMULATIVE AREA =      .13 SQ MI


*** *** *** *** *** *** *** *** *** *** *** *** *** *** *** *** *** *** *** *** *** *** *** *** *** *** *** *** *** *** *** *** *** ***

                 **************
                 *            *
 281 KK          *   A43A1B   *
                 *            *
                 **************
                           SUB-BASIN A43A1B -LAND USE - DESERT MOUNTAINS,DESERT HILLS;MINOR DEVELOPMENT
                           24-HOUR TYPE II RAINFALL WAS USED TO FIND TC & R FOR THIS BASIN
                           THIS BASIN USED RAINFALL REDUCTION FACTOR OF .97

                  SUBBASIN RUNOFF DATA

 285 BA             SUBBASIN CHARACTERISTICS
                       TAREA          .17  SUBBASIN AREA

                    PRECIPITATION DATA

  16 PB                STORM        4.07  BASIN TOTAL PRECIPITATION

  16 PI              INCREMENTAL PRECIPITATION PATTERN
                       .00      .00      .00      .00      .00      .00      .00      .00      .00      .00
                       .00      .00      .00      .00      .00      .00      .00      .00      .00      .00
                       .00      .00      .00      .00      .00      .00      .00      .00      .00      .00
                       .00      .00      .00      .00      .00      .00      .00      .00      .00      .00
                       .00      .00      .00      .00      .00      .00      .00      .00      .00      .00
                       .00      .00      .00      .00      .00      .00      .00      .00      .00      .00
                       .00      .00      .00      .00      .00      .00      .00      .00      .00      .00
                       .00      .00      .00      .00      .00      .00      .00      .00      .00      .00
                       .00      .00      .00      .00      .00      .00      .00      .00      .00      .00
                       .00      .00      .00      .00      .00      .00      .00      .00      .00      .00
                       .00      .00      .00      .00      .00      .00      .00      .00      .00      .00
                       .00      .00      .00      .00      .00      .00      .00      .00      .00      .00
                       .00      .00      .00      .00      .00      .00      .01      .01      .01      .01
                       .01      .01      .01      .01      .01      .01      .01      .01      .06      .06
                       .06      .06      .06      .06      .01      .01      .01      .01      .01      .01
                       .01      .01      .01      .01      .01      .01      .00      .00      .00      .00
                       .00      .00      .00      .00      .00      .00      .00      .00      .00      .00
                       .00      .00      .00      .00      .00      .00      .00      .00      .00      .00
                       .00      .00      .00      .00      .00      .00      .00      .00      .00      .00
                       .00      .00      .00      .00      .00      .00      .00      .00      .00      .00
                       .00      .00      .00      .00      .00      .00      .00      .00      .00      .00
                       .00      .00      .00      .00      .00      .00      .00      .00      .00      .00
                       .00      .00      .00      .00      .00      .00      .00      .00      .00      .00
                       .00      .00      .00      .00      .00      .00      .00      .00      .00      .00
                       .00      .00      .00      .00      .00      .00      .00      .00      .00      .00
                       .00      .00      .00      .00      .00      .00      .00      .00      .00      .00
                       .00      .00      .00      .00      .00      .00      .00      .00      .00      .00
                       .00      .00      .00      .00      .00      .00      .00      .00      .00      .00
                       .00      .00      .00      .00      .00      .00      .00      .00

 286 LG             GREEN AND AMPT LOSS RATE
                       STRTL          .15  STARTING LOSS
                         DTH          .28  MOISTURE DEFICIT
                        PSIF         4.10  WETTING FRONT SUCTION
                       XKSAT          .46  HYDRAULIC CONDUCTIVITY
                       RTIMP        15.00  PERCENT IMPERVIOUS AREA

 287 UC             CLARK UNITGRAPH
                          TC          .28  TIME OF CONCENTRATION
                           R          .15  STORAGE COEFFICIENT

 288 UA             ACCUMULATED-AREA VS. TIME,  11 ORDINATES
                        .0      3.0      5.0      8.0     12.0     20.0     43.0     75.0     90.0     96.0
                     100.0

                                                   ***

                                          UNIT HYDROGRAPH PARAMETERS
                                     CLARK  TC=   .28 HR,          R=   .15 HR
                                    SNYDER  TP=   .25 HR,         CP=   .83

                                             UNIT HYDROGRAPH
                                       12 END-OF-PERIOD ORDINATES
                 22.      128.     321.     352.     214.     121.      69.      39.      22.      13.
                  7.        4.

       ***         ***         ***         ***         ***

                          HYDROGRAPH AT STATION    A43A1B
```



```
  TOTAL RAINFALL =   4.07, TOTAL LOSS =   2.53, TOTAL EXCESS =   1.54

  PEAK FLOW     TIME                              MAXIMUM AVERAGE FLOW
                                        6-HR        24-HR        72-HR      24.92-HR
+  (CFS)        (HR)
                            (CFS)
+    235.      12.08                      25.           7.           7.           7.
                          (INCHES)      1.357        1.535        1.536        1.536
                           (AC-FT)        12.          14.          14.          14.

                          CUMULATIVE AREA =      .17 SQ MI


*** *** *** *** *** *** *** *** *** *** *** *** *** *** *** *** *** *** *** *** *** *** *** *** *** *** *** *** *** *** *** *** *** ***

                 **************
                 *            *
 290 KK          *   CPHV9    *
                 *            *
                 **************
                      COMBINE ROUTED FLOW FROM SUB-BASIN NWSM1B WITH RUNOFF FROM SUB-BASIN A43A1B

 292 HC            HYDROGRAPH COMBINATION
                        ICOMP            2  NUMBER OF HYDROGRAPHS TO COMBINE

                                                   ***

       ***         ***         ***         ***         ***

                          HYDROGRAPH AT STATION    CPHV9

  PEAK FLOW     TIME                              MAXIMUM AVERAGE FLOW
                                        6-HR        24-HR        72-HR      24.92-HR
+  (CFS)        (HR)
                            (CFS)
+    382.      12.08                      52.          16.          16.          16.
                          (INCHES)      1.623        2.032        2.034        2.034
                           (AC-FT)        26.          33.          33.          33.

                          CUMULATIVE AREA =      .30 SQ MI


*** *** *** *** *** *** *** *** *** *** *** *** *** *** *** *** *** *** *** *** *** *** *** *** *** *** *** *** *** *** *** *** *** ***

                 **************
                 *            *
 293 KK          *   RRHV19   *
                 *            *
                 **************
                      ROUTE FLOW FROM COMPUTATION CPHV9 TO COMPUTATION POINT CPHV10

                  HYDROGRAPH ROUTING DATA

 295 RS             STORAGE ROUTING
                       NSTPS            5  NUMBER OF SUBREACHES
                        ITYP         ELEV  TYPE OF INITIAL CONDITION
                      RSVRIC      1091.00  INITIAL CONDITION
                           X          .00  WORKING R AND D COEFFICIENT

 296 RC             NORMAL DEPTH CHANNEL
                         ANL         .065  LEFT OVERBANK N-VALUE
                        ANCH         .065  MAIN CHANNEL N-VALUE
                         ANR         .065  RIGHT OVERBANK N-VALUE
                       RLNTH        1700.  REACH LENGTH
                         SEL        .0140  ENERGY SLOPE
                       ELMAX       1092.0  MAX. ELEV. FOR STORAGE/OUTFLOW CALCULATION

                                          CROSS-SECTION DATA
                        --- LEFT OVERBANK --- + ------ MAIN CHANNEL ------- + --- RIGHT OVERBANK ---
 298 RY         ELEVATION  1092.00  1091.00  1091.00  1091.00  1091.00  1091.00  1091.00  1092.00
 297 RX          DISTANCE      .00    60.00   450.00   530.00   610.00   690.00   830.00   960.00

                                                   ***

                                COMPUTED STORAGE-OUTFLOW-ELEVATION DATA

      STORAGE        .00      1.59      3.20      4.84      6.49      8.16      9.86     11.57     13.31     15.06
      OUTFLOW        .00     15.46     49.20     96.95    156.99    228.30    310.19    402.14    503.77    614.75
    ELEVATION    1091.00   1091.05   1091.11   1091.16   1091.21   1091.26   1091.32   1091.37   1091.42   1091.47

      STORAGE      16.84     18.63     20.45     22.29     24.15     26.02     27.92     29.84     31.78     33.74
      OUTFLOW     734.85    863.85   1001.59   1147.90   1302.68   1465.81   1637.21   1816.79   2004.49   2200.25
    ELEVATION    1091.53   1091.58   1091.63   1091.68   1091.74   1091.79   1091.84   1091.89   1091.95   1092.00

*** WARNING *** MODIFIED PULS ROUTING MAY BE NUMERICALLY UNSTABLE FOR OUTFLOWS BETWEEN      402. TO      2200.
                THE ROUTED HYDROGRAPH SHOULD BE EXAMINED FOR OSCILLATIONS OR OUTFLOWS GREATER THAN PEAK INFLOWS.
                THIS CAN BE CORRECTED BY DECREASING THE TIME INTERVAL OR INCREASING STORAGE (USE A LONGER REACH.)

       ***         ***         ***         ***         ***
```

HYDROGRAPH AT STATION RRHV19

PEAK FLOW	TIME		6-HR	MAXIMUM AVERAGE FLOW 24-HR	72-HR	24.92-HR
+ (CFS)	(HR)					
		(CFS)				
+ 348.	12.33		52.	16.	16.	16.
		(INCHES)	1.620	2.021	2.021	2.021
		(AC-FT)	26.	32.	32.	32.

PEAK STORAGE	TIME	6-HR	MAXIMUM AVERAGE STORAGE 24-HR	72-HR	24.92-HR
+ (AC-FT)	(HR)				
2.	12.33	1.	0.	0.	0.

PEAK STAGE	TIME	6-HR	MAXIMUM AVERAGE STAGE 24-HR	72-HR	24.92-HR
+ (FEET)	(HR)				
1091.34	12.33	1091.09	1091.03	1091.03	1091.03

CUMULATIVE AREA = .30 SQ MI

*** ***

```
              **************
              *            *
299 KK        *   CPHV10   *
              *            *
              **************
```

COMBINE ROUTED FLOWS FROM COMPUTATION POINTS CPHV8 AND CPHV9

301 HC HYDROGRAPH COMBINATION
ICOMP 2 NUMBER OF HYDROGRAPHS TO COMBINE

***

*** *** *** *** ***

HYDROGRAPH AT STATION CPHV10

PEAK FLOW	TIME		6-HR	MAXIMUM AVERAGE FLOW 24-HR	72-HR	24.92-HR
+ (CFS)	(HR)					
		(CFS)				
+ 373.	12.42		70.	22.	21.	21.
		(INCHES)	1.669	2.059	2.059	2.059
		(AC-FT)	35.	43.	43.	43.

CUMULATIVE AREA = .39 SQ MI

*** ***

```
              **************
              *            *
302 KK        *   RRHV20   *
              *            *
              **************
```

ROUTE FLOW FROM COMPUTATION CPHV10 TO COMPUTATION POINT CPHV11

HYDROGRAPH ROUTING DATA

304 RS STORAGE ROUTING
NSTPS 2 NUMBER OF SUBREACHES
ITYP ELEV TYPE OF INITIAL CONDITION
RSVRIC 1074.50 INITIAL CONDITION
X .00 WORKING R AND D COEFFICIENT

305 RC NORMAL DEPTH CHANNEL
ANL .065 LEFT OVERBANK N-VALUE
ANCH .065 MAIN CHANNEL N-VALUE
ANR .065 RIGHT OVERBANK N-VALUE
RLNTH 1100. REACH LENGTH
SEL .0085 ENERGY SLOPE
ELMAX 1078.0 MAX. ELEV. FOR STORAGE/OUTFLOW CALCULATION

CROSS-SECTION DATA

		--- LEFT OVERBANK ---	+	------ MAIN CHANNEL	-------	+	--- RIGHT OVERBANK ---	
307 RY	ELEVATION	1078.00	1076.00	1074.50	1074.50	1074.50	1074.50	1076.00	1078.00
306 RX	DISTANCE	.00	90.00	480.00	510.00	520.00	530.00	870.00	1300.00

***

COMPUTED STORAGE-OUTFLOW-ELEVATION DATA

STORAGE	.00	.44	1.30	2.57	4.27	6.38	8.90	11.84	15.20	18.91
OUTFLOW	.00	9.86	42.60	105.95	206.99	352.27	547.87	799.52	1112.68	1522.72
ELEVATION	1074.50	1074.68	1074.87	1075.05	1075.24	1075.42	1075.61	1075.79	1075.97	1076.16

STORAGE	22.84	26.99	31.37	35.97	40.79	45.84	51.10	56.59	62.31	68.24
OUTFLOW	2004.26	2552.86	3169.55	3855.56	4612.25	5441.06	6343.46	7321.02	8375.28	9507.84
ELEVATION	1076.34	1076.53	1076.71	1076.89	1077.08	1077.26	1077.45	1077.63	1077.82	1078.00

*** WARNING *** MODIFIED PULS ROUTING MAY BE NUMERICALLY UNSTABLE FOR OUTFLOWS BETWEEN 3170. TO 9508.
THE ROUTED HYDROGRAPH SHOULD BE EXAMINED FOR OSCILLATIONS OR OUTFLOWS GREATER THAN PEAK INFLOWS.
THIS CAN BE CORRECTED BY DECREASING THE TIME INTERVAL OR INCREASING STORAGE (USE A LONGER REACH.)

*** *** *** *** ***

HYDROGRAPH AT STATION RRHV20

PEAK FLOW	TIME		6-HR	MAXIMUM AVERAGE FLOW 24-HR	72-HR	24.92-HR
+ (CFS)	(HR)					
		(CFS)				
+ 337.	12.58		70.	22.	21.	21.
		(INCHES)	1.669	2.051	2.051	2.051
		(AC-FT)	35.	43.	43.	43.

PEAK STORAGE	TIME	6-HR	MAXIMUM AVERAGE STORAGE 24-HR	72-HR	24.92-HR
+ (AC-FT)	(HR)				
3.	12.58	1.	0.	0.	0.

PEAK STAGE	TIME	6-HR	MAXIMUM AVERAGE STAGE 24-HR	72-HR	24.92-HR
+ (FEET)	(HR)				
1075.40	12.58	1074.88	1074.67	1074.66	1074.66

CUMULATIVE AREA = .39 SQ MI

*** ***

```
              **************
              *            *
308 KK        *   ED47B    *
              *            *
              **************
```

SUB-BASIN ED47B -LAND USE - AGRICULTURE,DESERT MOUNTAIN,DESERT HILLS;MODERATE DEVELOPMENT
24-HOUR TYPE II RAINFALL WAS USED TO FIND TC & R FOR THIS BASIN
THIS BASIN USED RAINFALL REDUCTION FACTOR OF .97

SUBBASIN RUNOFF DATA

313 BA SUBBASIN CHARACTERISTICS
TAREA .81 SUBBASIN AREA

PRECIPITATION DATA

16 PB STORM 4.07 BASIN TOTAL PRECIPITATION

16 PI INCREMENTAL PRECIPITATION PATTERN

.00	.00	.00	.00	.00	.00	.00	.00	.00	.00
.00	.00	.00	.00	.00	.00	.00	.00	.00	.00
.00	.00	.00	.00	.00	.00	.00	.00	.00	.00
.00	.00	.00	.00	.00	.00	.00	.00	.00	.00
.00	.00	.00	.00	.00	.00	.00	.00	.00	.00
.00	.00	.00	.00	.00	.00	.00	.00	.00	.00
.00	.00	.00	.00	.00	.00	.00	.00	.00	.00
.00	.00	.00	.00	.00	.00	.00	.00	.00	.00
.00	.00	.00	.00	.00	.00	.00	.00	.00	.00
.00	.00	.00	.00	.00	.00	.00	.00	.00	.00
.00	.00	.00	.00	.00	.00	.00	.00	.00	.00
.00	.00	.00	.00	.00	.00	.00	.00	.00	.00
.00	.00	.00	.00	.00	.00	.01	.01	.01	.01
.01	.01	.01	.01	.01	.01	.01	.01	.06	.06
.06	.06	.06	.06	.01	.01	.01	.01	.01	.01
.01	.01	.01	.01	.01	.01	.00	.00	.00	.00
.00	.00	.00	.00	.00	.00	.00	.00	.00	.00
.00	.00	.00	.00	.00	.00	.00	.00	.00	.00
.00	.00	.00	.00	.00	.00	.00	.00	.00	.00
.00	.00	.00	.00	.00	.00	.00	.00	.00	.00
.00	.00	.00	.00	.00	.00	.00	.00	.00	.00
.00	.00	.00	.00	.00	.00	.00	.00	.00	.00
.00	.00	.00	.00	.00	.00	.00	.00	.00	.00
.00	.00	.00	.00	.00	.00	.00	.00	.00	.00
.00	.00	.00	.00	.00	.00	.00	.00	.00	.00
.00	.00	.00	.00	.00	.00	.00	.00	.00	.00
.00	.00	.00	.00	.00	.00	.00	.00	.00	.00
.00	.00	.00	.00	.00	.00	.00	.00	.00	.00
.00	.00	.00	.00	.00	.00	.00	.00		

314 LG GREEN AND AMPT LOSS RATE
STRTL .33 STARTING LOSS
DTH .09 MOISTURE DEFICIT
PSIF 4.10 WETTING FRONT SUCTION
XKSAT .63 HYDRAULIC CONDUCTIVITY
RTIMP 10.00 PERCENT IMPERVIOUS AREA

```
315 UC          CLARK UNITGRAPH
                     TC        .28  TIME OF CONCENTRATION
                      R        .11  STORAGE COEFFICIENT

316 UA          ACCUMULATED-AREA VS. TIME,  11 ORDINATES
                      .0      3.0      5.0      8.0     12.0     20.0     43.0     75.0     90.0     96.0
                   100.0

                                                  ***

                                              UNIT HYDROGRAPH PARAMETERS
                                        CLARK   TC=   .28 HR,       R=   .11 HR
                                       SNYDER   TP=   .24 HR,      CP=   .89

                                              UNIT HYDROGRAPH
                                        10 END-OF-PERIOD ORDINATES
                    132.     740.    1808.    1840.     939.     436.     203.      94.      44.      20.

        ***             ***             ***             ***             ***

                          HYDROGRAPH AT STATION    ED47B

     TOTAL RAINFALL =    4.07, TOTAL LOSS =    2.66, TOTAL EXCESS =    1.41

   PEAK FLOW     TIME                          MAXIMUM AVERAGE FLOW
                                        6-HR       24-HR       72-HR     24.92-HR
+    (CFS)       (HR)
                   (CFS)
+     1159.     12.08                  112.         31.         30.         30.
                (INCHES)              1.288       1.407       1.408       1.408
                 (AC-FT)                56.         61.         61.         61.

                CUMULATIVE AREA =     .81 SQ MI


*** *** *** *** *** *** *** *** *** *** *** *** *** *** *** *** *** *** *** *** *** *** *** *** *** *** *** *** *** *** *** *** *** *** ***


            **************
            *            *
318 KK      *    CPHV11  *
            *            *
            **************
                          COMBINE ROUTED FLOWS FROM COMPUTATION POINT CPHV10 TO RUNOFF FROM SUB-BASIN
                          ED47B

321 HC          HYDROGRAPH COMBINATION
                     ICOMP          3  NUMBER OF HYDROGRAPHS TO COMBINE

                                                  ***

        ***             ***             ***             ***             ***

                          HYDROGRAPH AT STATION    CPHV11

   PEAK FLOW     TIME                          MAXIMUM AVERAGE FLOW
                                        6-HR       24-HR       72-HR     24.92-HR
+    (CFS)       (HR)
                   (CFS)
+     1197.     12.08                  199.         64.         62.         62.
                (INCHES)              .804       1.039       1.040       1.040
                 (AC-FT)                99.        128.        128.        128.

                CUMULATIVE AREA =     2.30 SQ MI


*** *** *** *** *** *** *** *** *** *** *** *** *** *** *** *** *** *** *** *** *** *** *** *** *** *** *** *** *** *** *** *** *** *** ***


            **************
            *            *
322 KK      *    DFED47  *
            *            *
            **************
                          RATE CHANNEL CROSSECTION AT COMPUTATION POINT ED47B FOR SPLIT FLOW
                          DIVERTED FLOW IS ROUTED THROUGH SUB BASIN IR55B

     DT          DIVERSION
                      ISTAD      DIR55B  DIVERSION HYDROGRAPH IDENTIFICATION

     DI             INFLOW         .00     139.00     558.00    1324.00    2507.00

     DQ       DIVERTED FLOW         .00      20.00     126.00     372.00     801.00

                                                  ***

        ***             ***             ***             ***             ***

                          DIVERSION HYDROGRAPH    DIR55B

   PEAK FLOW     TIME                          MAXIMUM AVERAGE FLOW
```



```
                                        6-HR       24-HR       72-HR     24.92-HR
+    (CFS)       (HR)
                   (CFS)
+      331.     12.08                   44.         13.         13.         13.
                (INCHES)              .178        .212        .212        .212
                 (AC-FT)                22.         26.         26.         26.

                CUMULATIVE AREA =     2.30 SQ MI

        ***             ***             ***             ***             ***

                          HYDROGRAPH AT STATION    DFED47

   PEAK FLOW     TIME                          MAXIMUM AVERAGE FLOW
                                        6-HR       24-HR       72-HR     24.92-HR
+    (CFS)       (HR)
                   (CFS)
+      866.     12.08                  155.         51.         49.         49.
                (INCHES)              .626        .827        .828        .828
                 (AC-FT)                77.        102.        102.        102.

                CUMULATIVE AREA =     2.30 SQ MI


*** *** *** *** *** *** *** *** *** *** *** *** *** *** *** *** *** *** *** *** *** *** *** *** *** *** *** *** *** *** *** *** *** *** ***


            **************
            *            *
328 KK      *    RRHV21  *
            *            *
            **************
                          ROUTE FLOW FROM COMPUTATION POINT CPHV11 TO COMPUTATION POINT CPHV12
                          (1ST REACH)

     HYDROGRAPH ROUTING DATA

331 RS          STORAGE ROUTING
                     NSTPS          5  NUMBER OF SUBREACHES
                      ITYP       ELEV  TYPE OF INITIAL CONDITION
                     RSVRIC    1059.50  INITIAL CONDITION
                          X        .00 WORKING R AND D COEFFICIENT

332 RC          NORMAL DEPTH CHANNEL
                      ANL        .015  LEFT OVERBANK N-VALUE
                     ANCH        .065  MAIN CHANNEL N-VALUE
                      ANR        .065  RIGHT OVERBANK N-VALUE
                    RLNTH       2660.  REACH LENGTH
                      SEL       .0060  ENERGY SLOPE
                    ELMAX      1060.7  MAX. ELEV. FOR STORAGE/OUTFLOW CALCULATION

                                CROSS-SECTION DATA
                          --- LEFT OVERBANK --- + ------ MAIN CHANNEL ------- + --- RIGHT OVERBANK ---
334 RY       ELEVATION  1060.70  1060.00  1060.00  1060.00  1059.50  1059.50  1060.00  1060.70
333 RX       DISTANCE       .00    30.00    60.00   150.00   180.00   600.00   660.00   690.00

                                                  ***

                                COMPUTED STORAGE-OUTFLOW-ELEVATION DATA

     STORAGE       .00     1.64     3.32     5.05     6.82     8.64    10.50    12.40    14.39    16.83
     OUTFLOW       .00     7.51    24.03    47.56    77.37   113.02   154.23   200.81   225.82   291.25
   ELEVATION  1059.50  1059.56  1059.63  1059.69  1059.75  1059.82  1059.88  1059.94  1060.00  1060.07

     STORAGE     19.29    21.77    24.27    26.79    29.34    31.90    34.49    37.10    39.72    42.37
     OUTFLOW    365.62   448.25   538.82   637.10   742.97   856.31   977.05  1105.14  1240.53  1383.19
   ELEVATION  1060.13  1060.19  1060.26  1060.32  1060.38  1060.45  1060.51  1060.57  1060.64  1060.70

        ***             ***             ***             ***             ***

                          HYDROGRAPH AT STATION    RRHV21

   PEAK FLOW     TIME                          MAXIMUM AVERAGE FLOW
                                        6-HR       24-HR       72-HR     24.92-HR
+    (CFS)       (HR)
                   (CFS)
+      752.     12.33                  155.         50.         48.         48.
                (INCHES)              .624        .803        .803        .803
                 (AC-FT)                77.         99.         99.         99.

 PEAK STORAGE   TIME                          MAXIMUM AVERAGE STORAGE
                                        6-HR       24-HR       72-HR     24.92-HR
+ (AC-FT)       (HR)
          6.    12.33                    2.          1.          1.          1.

   PEAK STAGE   TIME                          MAXIMUM AVERAGE STAGE
                                        6-HR       24-HR       72-HR     24.92-HR
+    (FEET)     (HR)
     1060.39    12.33              1059.83     1059.65     1059.64     1059.64

                CUMULATIVE AREA =     2.30 SQ MI
```

```
*** *** *** *** *** *** *** *** *** *** *** *** *** *** *** *** *** *** *** *** *** *** *** *** *** *** *** *** *** *** *** *** *** ***

              **************
              *            *
 335 KK       *   RRHV22   *
              *            *
              **************
                          ROUTE FLOW FROM COMPUTATION POINT CPHV11 TO COMPUTATION POINT CPHV12
                           (2ND REACH)

            HYDROGRAPH ROUTING DATA

 338 RS          STORAGE ROUTING
                      NSTPS          7  NUMBER OF SUBREACHES
                       ITYP       ELEV  TYPE OF INITIAL CONDITION
                     RSVRIC    1039.50  INITIAL CONDITION
                          X        .00  WORKING R AND D COEFFICIENT

 339 RC          NORMAL DEPTH CHANNEL
                        ANL       .070  LEFT OVERBANK N-VALUE
                       ANCH       .070  MAIN CHANNEL N-VALUE
                        ANR       .070  RIGHT OVERBANK N-VALUE
                      RLNTH      2724.  REACH LENGTH
                        SEL      .0070  ENERGY SLOPE
                      ELMAX     1040.1  MAX. ELEV. FOR STORAGE/OUTFLOW CALCULATION

                                          CROSS-SECTION DATA
                         --- LEFT OVERBANK --- + ------ MAIN CHANNEL ------- + --- RIGHT OVERBANK ---
 341 RY        ELEVATION  1040.10   1039.00   1039.50   1039.50   1039.50   1039.50   1040.00   1040.10
 340 RX        DISTANCE       .00    230.00    700.00    701.00   1260.00   1261.00   1480.00   1520.00

                                                       ***

                                          COMPUTED STORAGE-OUTFLOW-ELEVATION DATA

         STORAGE        .00       .12       .48      1.08      1.92      3.01      4.33      5.89      7.70     10.46
         OUTFLOW        .00       .32      2.05      6.04     13.02     23.60     38.37     57.89     82.65    116.99
       ELEVATION    1039.00   1039.06   1039.12   1039.17   1039.23   1039.29   1039.35   1039.41   1039.46   1039.52

         STORAGE      14.69     19.05     23.55     28.18     32.94     37.85     42.89     48.06     53.37     58.80
         OUTFLOW     172.72    243.47    327.76    424.86    534.37    656.03    789.68    935.20   1092.72   1262.04
       ELEVATION    1039.58   1039.64   1039.69   1039.75   1039.81   1039.87   1039.93   1039.98   1040.04   1040.10

       ***          ***          ***          ***          ***

                        HYDROGRAPH AT STATION    RRHV22

  PEAK FLOW      TIME                         MAXIMUM AVERAGE FLOW
                                     6-HR        24-HR        72-HR      24.92-HR
+   (CFS)        (HR)
                            (CFS)
+     549.      13.00                 153.          56.          54.          54.
                          (INCHES)    .619         .897         .912         .912
                           (AC-FT)     76.         110.         112.         112.

 PEAK STORAGE    TIME                        MAXIMUM AVERAGE STORAGE
                                     6-HR        24-HR        72-HR      24.92-HR
+  (AC-FT)  .   (HR)
        5.      13.00                   2.           1.           1.           1.

  PEAK STAGE     TIME                         MAXIMUM AVERAGE STAGE
                                     6-HR        24-HR        72-HR      24.92-HR
+   (FEET)       (HR)
   1039.82      13.00              1039.50      1039.30      1039.30      1039.30

                          CUMULATIVE AREA =     2.30 SQ MI

*** *** *** *** *** *** *** *** *** *** *** *** *** *** *** *** *** *** *** *** *** *** *** *** *** *** *** *** *** *** *** *** *** ***

              **************
              *            *
 342 KK       *   IR59B    *
              *            *
              **************
                          SUB-BASIN IR59B -LAND USE - AGRICULTURE; MINOR DEVELOPMENT
                          24-HOUR TYPE II RAINFALL WAS USED TO FIND TC & R FOR THIS BASIN
                          THIS BASIN USED RAINFALL REDUCTION FACTOR OF .97

            SUBBASIN RUNOFF DATA

 346 BA        SUBBASIN CHARACTERISTICS
                      TAREA        .66  SUBBASIN AREA

               PRECIPITATION DATA

  16 PB               STORM       4.07  BASIN TOTAL PRECIPITATION
```



```
  16 PI           INCREMENTAL PRECIPITATION PATTERN
                       .00      .00      .00      .00      .00      .00      .00      .00      .00      .00
                       .00      .00      .00      .00      .00      .00      .00      .00      .00      .00
                       .00      .00      .00      .00      .00      .00      .00      .00      .00      .00
                       .00      .00      .00      .00      .00      .00      .00      .00      .00      .00
                       .00      .00      .00      .00      .00      .00      .00      .00      .00      .00
                       .00      .00      .00      .00      .00      .00      .00      .00      .00      .00
                       .00      .00      .00      .00      .00      .00      .00      .00      .00      .00
                       .00      .00      .00      .00      .00      .00      .00      .00      .00      .00
                       .00      .00      .00      .00      .00      .00      .00      .00      .00      .00
                       .00      .00      .00      .00      .00      .00      .00      .00      .00      .00
                       .00      .00      .00      .00      .00      .00      .00      .00      .00      .00
                       .00      .00      .00      .00      .00      .00      .00      .00      .00      .00
                       .00      .00      .00      .00      .00      .00      .01      .01      .01      .01
                       .01      .01      .01      .01      .01      .01      .01      .01      .06      .06
                       .06      .06      .06      .06      .01      .01      .01      .01      .01      .01
                       .01      .01      .01      .01      .01      .01      .00      .00      .00      .00
                       .00      .00      .00      .00      .00      .00      .00      .00      .00      .00
                       .00      .00      .00      .00      .00      .00      .00      .00      .00      .00
                       .00      .00      .00      .00      .00      .00      .00      .00      .00      .00
                       .00      .00      .00      .00      .00      .00      .00      .00      .00      .00
                       .00      .00      .00      .00      .00      .00      .00      .00      .00      .00
                       .00      .00      .00      .00      .00      .00      .00      .00      .00      .00
                       .00      .00      .00      .00      .00      .00      .00      .00      .00      .00
                       .00      .00      .00      .00      .00      .00      .00      .00      .00      .00
                       .00      .00      .00      .00      .00      .00      .00      .00      .00      .00
                       .00      .00      .00      .00      .00      .00      .00      .00      .00      .00
                       .00      .00      .00      .00      .00      .00      .00      .00      .00      .00
                       .00      .00      .00      .00      .00      .00      .00      .00      .00      .00
                       .00      .00      .00      .00      .00      .00      .00      .00

 347 LG          GREEN AND AMPT LOSS RATE
                      STRTL        .50  STARTING LOSS
                        DTH        .00  MOISTURE DEFICIT
                       PSIF       3.99  WETTING FRONT SUCTION
                      XKSAT        .64  HYDRAULIC CONDUCTIVITY
                      RTIMP        .00  PERCENT IMPERVIOUS AREA

 348 UC          CLARK UNITGRAPH
                         TC        .88  TIME OF CONCENTRATION
                          R        .61  STORAGE COEFFICIENT

 349 UA          ACCUMULATED-AREA VS. TIME,  11 ORDINATES
                         .0       1.6       5.0      10.6      19.5      32.0      44.0      56.0      70.0      82.0
                      100.0

                                                       ***

                                         UNIT HYDROGRAPH PARAMETERS
                                   CLARK    TC=   .88 HR,        R=   .61 HR
                                  SNYDER    TP=   .91 HR,       CP=   .85

                                              UNIT HYDROGRAPH
                                         46 END-OF-PERIOD ORDINATES
                 5.        19.        44.        80.       131.       188.       238.       286.       330.       373.
               404.       385.       336.       293.       256.       223.       194.       170.       148.       129.
               112.        98.        86.        75.        65.        57.        49.        43.        38.        33.
                29.        25.        22.        19.        17.        14.        13.        11.        10.         8.
                 7.         6.         6.         5.         4.         4.

       ***          ***          ***          ***          ***

                        HYDROGRAPH AT STATION    IR59B

   TOTAL RAINFALL =    4.07, TOTAL LOSS =    2.84, TOTAL EXCESS =    1.23

  PEAK FLOW      TIME                         MAXIMUM AVERAGE FLOW
                                     6-HR        24-HR        72-HR      24.92-HR
+   (CFS)        (HR)
                            (CFS)
+     435.      12.67                  87.          22.          21.          21.
                          (INCHES)   1.224        1.224        1.224        1.224
                           (AC-FT)     43.          43.          43.          43.

                          CUMULATIVE AREA =      .66 SQ MI

*** *** *** *** *** *** *** *** *** *** *** *** *** *** *** *** *** *** *** *** *** *** *** *** *** *** *** *** *** *** *** *** *** ***

              **************
              *            *
 351 KK       *   CPHV12   *
              *            *
              **************
                          COMBINE ROUTED FLOW FROM COMPUTATION POINT CPHV11 TO RUNOFF FROM SUB-BASIN
                          IR59B

 354 HC          HYDROGRAPH COMBINATION
                      ICOMP          2  NUMBER OF HYDROGRAPHS TO COMBINE

                                                       ***

       ***          ***          ***          ***          ***
```

HYDROGRAPH AT STATION CPHV12

	PEAK FLOW	TIME		MAXIMUM AVERAGE FLOW 6-HR	24-HR	72-HR	24.92-HR
+	(CFS)	(HR)					
			(CFS)				
+	870.	12.92		238.	77.	75.	75.
			(INCHES)	.747	.970	.981	.981
			(AC-FT)	118.	153.	155.	155.

CUMULATIVE AREA = 2.96 SQ MI

*** ***

```
              ***************
              *             *
355 KK        *    DIHV12   *
              *             *
              ***************
```

THE WESTERN EDGE OF SUB-BASIN IR59B WHICH IS ALSO THE WESTERN EDGE OF THE STUDY AREA IS BOUNDED BY A CONCRETE IRRIGATION CANAL AND EARTHEN ROADWAY THE EARTHEN ROADWAY HAS A CAPACITY TO CONVEY APPROXIMATELY 65 CFS TO THE NORTH WEST BEFORE THE CONCRETE IRRIGATION CANAL IS OVERTOPPED AND FLOW CONTINUES TO DRAIN TO THE WEST. THEREFORE APPROXIMATELY 65 CFS WILL CONCENTRATE AT COMPUTATION POINT CPHV12. AT COMPUTATION POINT CPHV12 A DIP SECTION IN THE EARTHEN ROADWAY WILL DRAIN APPROXIMATELY 684 CFS TO THE WEST. ALL OF THE FLOW CONCENTRATED AT COMPUTATION CPHV12 PASSES OUT OF THE STUDY AREA.

DT	DIVERSION ISTAD	RCHV12	DIVERSION HYDROGRAPH IDENTIFICATION								
DI	INFLOW	.00	100.00	200.00	400.00	600.00	800.00	900.00	1000.00	1200.00	1400.00
DQ	DIVERTED FLOW	.00	100.00	200.00	400.00	600.00	800.00	900.00	1000.00	1200.00	1400.00

*** *** *** *** ***

DIVERSION HYDROGRAPH RCHV12

	PEAK FLOW	TIME		MAXIMUM AVERAGE FLOW 6-HR	24-HR	72-HR	24.92-HR
+	(CFS)	(HR)					
			(CFS)				
+	870.	12.92		238.	77.	75.	75.
			(INCHES)	.747	.970	.981	.981
			(AC-FT)	118.	153.	155.	155.

CUMULATIVE AREA = 2.96 SQ MI

*** *** *** *** ***

HYDROGRAPH AT STATION DIHV12

	PEAK FLOW	TIME		MAXIMUM AVERAGE FLOW 6-HR	24-HR	72-HR	24.92-HR
+	(CFS)	(HR)					
			(CFS)				
+	0.	.00		0.	0.	0.	0.
			(INCHES)	.000	.000	.000	.000
			(AC-FT)	0.	0.	0.	0.

CUMULATIVE AREA = 2.96 SQ MI

*** ***

```
              ***************
              *             *
368 KK        *    REED47   *
              *             *
              ***************
```

RETRIVE DIVERTED FLOW FROM COMPUTATION POINT CPHV11

```
370 DR          RETRIEVE DIVERSION HYDROGRAPH
                     ISTAD      DIR55B  DIVERSION HYDROGRAPH IDENTIFICATION
```

*** *** *** *** ***

HYDROGRAPH AT STATION REED47

	PEAK FLOW	TIME		MAXIMUM AVERAGE FLOW 6-HR	24-HR	72-HR	24.92-HR
+	(CFS)	(HR)					
			(CFS)				
+	331.	12.08		44.	13.	13.	13.
			(INCHES)	.139	.165	.165	.165
			(AC-FT)	22.	26.	26.	26.

CUMULATIVE AREA = .00 SQ MI

*** ***

```
              ***************
              *             *
371 KK        *    RRHV23   *
              *             *
              ***************
```

ROUTE DIVERTED FLOW FROM COMPUTATION POINT CPHV11 THROUGH SUB-BASIN IR55B

HYDROGRAPH ROUTING DATA

```
373 RS          STORAGE ROUTING
                     NSTPS          19  NUMBER OF SUBREACHES
                     ITYP        ELEV   TYPE OF INITIAL CONDITION
                    RSVRIC     1061.00  INITIAL CONDITION
                         X         .00 WORKING R AND D COEFFICIENT

374 RC          NORMAL DEPTH CHANNEL
                      ANL         .070  LEFT OVERBANK N-VALUE
                     ANCH         .070  MAIN CHANNEL N-VALUE
                      ANR         .070  RIGHT OVERBANK N-VALUE
                    RLNTH        4800.  REACH LENGTH
                      SEL        .0060  ENERGY SLOPE
                    ELMAX           .0  MAX. ELEV. FOR STORAGE/OUTFLOW CALCULATION

                                CROSS-SECTION DATA
                          --- LEFT OVERBANK --- + ------ MAIN CHANNEL ------- + --- RIGHT OVERBANK ---
376 RY          ELEVATION  1062.00  1061.00  1061.00  1061.00  1061.00  1061.00  1061.00  1062.00
375 RX          DISTANCE       .00    240.00   470.00   620.00   830.00  1200.00  1520.00  1740.00
```

***

COMPUTED STORAGE-OUTFLOW-ELEVATION DATA

STORAGE	.00	7.49	15.12	22.89	30.81	38.86	47.05	55.38	63.86	72.47
OUTFLOW	.00	15.64	49.83	98.30	159.38	232.08	315.76	409.95	514.30	628.55
ELEVATION	1061.00	1061.05	1061.11	1061.16	1061.21	1061.26	1061.32	1061.37	1061.42	1061.47
STORAGE	81.22	90.12	99.15	108.33	117.64	127.10	136.69	146.43	156.30	166.32
OUTFLOW	752.48	885.93	1028.78	1180.92	1342.26	1512.76	1692.34	1880.99	2078.66	2285.34
ELEVATION	1061.53	1061.58	1061.63	1061.68	1061.74	1061.79	1061.84	1061.89	1061.95	1062.00

*** WARNING *** MODIFIED PULS ROUTING MAY BE NUMERICALLY UNSTABLE FOR OUTFLOWS BETWEEN 886. TO 2285.
THE ROUTED HYDROGRAPH SHOULD BE EXAMINED FOR OSCILLATIONS OR OUTFLOWS GREATER THAN PEAK INFLOWS.
THIS CAN BE CORRECTED BY DECREASING THE TIME INTERVAL OR INCREASING STORAGE (USE A LONGER REACH.)

*** *** *** *** ***

HYDROGRAPH AT STATION RRHV23

	PEAK FLOW	TIME		MAXIMUM AVERAGE FLOW 6-HR	24-HR	72-HR	24.92-HR
+	(CFS)	(HR)					
			(CFS)				
+	128.	13.92		40.	12.	12.	12.
			(INCHES)	.000	.000	.000	.000
			(AC-FT)	20.	24.	24.	24.

	PEAK STORAGE	TIME		MAXIMUM AVERAGE STORAGE 6-HR	24-HR	72-HR	24.92-HR
+	(AC-FT)	(HR)					
	1.	13.92		1.	0.	0.	0.

	PEAK STAGE	TIME		MAXIMUM AVERAGE STAGE 6-HR	24-HR	72-HR	24.92-HR
+	(FEET)	(HR)					
	1061.18	13.92		1061.08	1061.03	1061.03	1061.03

CUMULATIVE AREA = .00 SQ MI

*** ***

```
              ***************
              *             *
377 KK        *     IR55B   *
              *             *
              ***************
```

```
                   SUB-BASIN IR55B -LAND USE - AGRICULTURE;MINOR DEVELOPMENT
                   24-HOUR TYPE II RAINFALL WAS USED TO FIND TC & R FOR THIS BASIN
                   THIS BASIN USED RAINFALL REDUCTION FACTOR OF .97

              SUBBASIN RUNOFF DATA

 381 BA        SUBBASIN CHARACTERISTICS
                  TAREA        .53  SUBBASIN AREA

               PRECIPITATION DATA

  16 PB           STORM       4.07  BASIN TOTAL PRECIPITATION

  16 PI          INCREMENTAL PRECIPITATION PATTERN
                  .00     .00     .00     .00     .00     .00     .00     .00     .00     .00
                  .00     .00     .00     .00     .00     .00     .00     .00     .00     .00
                  .00     .00     .00     .00     .00     .00     .00     .00     .00     .00
                  .00     .00     .00     .00     .00     .00     .00     .00     .00     .00
                  .00     .00     .00     .00     .00     .00     .00     .00     .00     .00
                  .00     .00     .00     .00     .00     .00     .00     .00     .00     .00
                  .00     .00     .00     .00     .00     .00     .00     .00     .00     .00
                  .00     .00     .00     .00     .00     .00     .00     .00     .00     .00
                  .00     .00     .00     .00     .00     .00     .00     .00     .00     .00
                  .00     .00     .00     .00     .00     .00     .00     .00     .00     .00
                  .00     .00     .00     .00     .00     .00     .00     .00     .00     .00
                  .00     .00     .00     .00     .00     .00     .00     .00     .00     .00
                  .00     .00     .00     .00     .00     .00     .01     .01     .01     .01
                  .01     .01     .01     .01     .01     .01     .01     .01     .06     .06
                  .06     .06     .06     .06     .01     .01     .01     .01     .01     .01
                  .01     .01     .01     .01     .01     .01     .00     .00     .00     .00
                  .00     .00     .00     .00     .00     .00     .00     .00     .00     .00
                  .00     .00     .00     .00     .00     .00     .00     .00     .00     .00
                  .00     .00     .00     .00     .00     .00     .00     .00     .00     .00
                  .00     .00     .00     .00     .00     .00     .00     .00     .00     .00
                  .00     .00     .00     .00     .00     .00     .00     .00     .00     .00
                  .00     .00     .00     .00     .00     .00     .00     .00     .00     .00
                  .00     .00     .00     .00     .00     .00     .00     .00     .00     .00
                  .00     .00     .00     .00     .00     .00     .00     .00     .00     .00
                  .00     .00     .00     .00     .00     .00     .00     .00     .00     .00
                  .00     .00     .00     .00     .00     .00     .00     .00     .00     .00
                  .00     .00     .00     .00     .00     .00     .00     .00     .00     .00
                  .00     .00     .00     .00     .00     .00     .00     .00     .00     .00
                  .00     .00     .00     .00     .00     .00     .00     .00

 382 LG        GREEN AND AMPT LOSS RATE
                  STRTL        .48  STARTING LOSS
                    DTH        .08  MOISTURE DEFICIT
                   PSIF       3.65  WETTING FRONT SUCTION
                  XKSAT        .50  HYDRAULIC CONDUCTIVITY
                  RTIMP       5.00  PERCENT IMPERVIOUS AREA

 383 UC        CLARK UNITGRAPH
                     TC        .85  TIME OF CONCENTRATION
                      R        .55  STORAGE COEFFICIENT

 384 UA        ACCUMULATED-AREA VS. TIME,  11 ORDINATES
                     .0       3.0      5.0      8.0     12.0     20.0     43.0     75.0     90.0     96.0
                  100.0

                                         ***

                                UNIT HYDROGRAPH PARAMETERS
                          CLARK   TC=   .85 HR,        R=   .55 HR
                         SNYDER   TP=   .71 HR,       CP=   .80

                                     UNIT HYDROGRAPH
                                 42 END-OF-PERIOD ORDINATES
             8.      21.      32.      47.      73.     145.     272.     370.     388.     367.
           330.     286.     246.     212.     182.     157.     135.     116.     100.      86.
            74.      63.      55.      47.      40.      35.      30.      26.      22.      19.
            16.      14.      12.      10.       9.       8.       7.       6.       5.       4.
             4.       3.

   ***         ***         ***         ***         ***

                   HYDROGRAPH AT STATION    IR55B

   TOTAL RAINFALL =    4.07, TOTAL LOSS =    2.72, TOTAL EXCESS =    1.35

 PEAK FLOW      TIME                       MAXIMUM AVERAGE FLOW
                                   6-HR        24-HR       72-HR     24.92-HR
+  (CFS)        (HR)
                          (CFS)
+   415.       12.50                  73.         19.         18.         18.
                        (INCHES)   1.287       1.346       1.347       1.347
                         (AC-FT)     36.         38.         38.         38.

                    CUMULATIVE AREA =     .53 SQ MI


*** *** *** *** *** *** *** *** *** *** *** *** *** *** *** *** *** *** *** *** *** *** *** *** *** *** *** *** *** *** *** *** *** ***

           **************
```



```
            *             *
 386 KK     *    CIR55B   *
            *             *
            ***************
                           COMBINE ROUTED DIVERTED FLOW FROM COMPUTATION POINT CPHV11 WITH RUNOFF FROM
                           SUB-BASIN IR55B

 389 HC        HYDROGRAPH COMBINATION
                    ICOMP            2  NUMBER OF HYDROGRAPHS TO COMBINE

                                                                 ***

    ***         ***         ***         ***         ***

                        HYDROGRAPH AT STATION    CIR55B

 PEAK FLOW      TIME                       MAXIMUM AVERAGE FLOW
                                   6-HR        24-HR       72-HR     24.92-HR
+  (CFS)        (HR)
                          (CFS)
+   417.       12.50                 110.         31.         30.         30.
                        (INCHES)   1.927       2.200       2.201       2.201
                         (AC-FT)     54.         62.         62.         62.

                    CUMULATIVE AREA =     .53 SQ MI


*** *** *** *** *** *** *** *** *** *** *** *** *** *** *** *** *** *** *** *** *** *** *** *** *** *** *** *** *** *** *** *** *** ***


            ***************
            *             *
 390 KK     *    DIR55B   *
            *             *
            ***************
                           THE WESTERN EDGE OF SUB-BASIN IR55B WHICH IS ALSO THE WESTERN EDGE OF THE
                           STUDY AREA IS BOUNDED BY AN EARTHEN IRRIGATION CANAL. MINOR CONTAINMENT OF
                           RUNOFF AND ROUTED FLOW WILL BE REALIZED. THEREFORE TOTAL FLOW AT COMPUTATION
                           POINT CIR55B IS DIVERTED BECAUSE FLOW FROM THIS POINT DOES NOT CONTRIBUTE
                           TO RUNOFF COMPUTATIONS DOWNSTREAM.

     DT            DIVERSION
                      ISTAD      RCIREB  DIVERSION HYDROGRAPH IDENTIFICATION

     DI               INFLOW        .00     100.00     200.00     400.00     600.00     800.00

     DQ        DIVERTED FLOW        .00     100.00     200.00     400.00     600.00     800.00
                                                                  ***

    ***         ***         ***         ***         ***

                        DIVERSION HYDROGRAPH    RCIREB

 PEAK FLOW      TIME                       MAXIMUM AVERAGE FLOW
                                   6-HR        24-HR       72-HR     24.92-HR
+  (CFS)        (HR)
                          (CFS)
+   417.       12.50                 110.         31.         30.         30.
                        (INCHES)   1.927       2.200       2.201       2.201
                         (AC-FT)     54.         62.         62.         62.

                    CUMULATIVE AREA =     .53 SQ MI


    ***         ***         ***         ***         ***

                        HYDROGRAPH AT STATION    DIR55B

 PEAK FLOW      TIME                       MAXIMUM AVERAGE FLOW
                                   6-HR        24-HR       72-HR     24.92-HR
+  (CFS)        (HR)
                          (CFS)
+     0.         .00                   0.          0.          0.          0.
                        (INCHES)    .000        .000        .000        .000
                         (AC-FT)      0.          0.          0.          0.

                    CUMULATIVE AREA =     .53 SQ MI
```

1

RUNOFF SUMMARY
FLOW IN CUBIC FEET PER SECOND
TIME IN HOURS, AREA IN SQUARE MILES

	OPERATION	STATION	PEAK FLOW	TIME OF PEAK	AVERAGE FLOW FOR MAXIMUM PERIOD 6-HOUR	24-HOUR	72-HOUR	BASIN AREA	MAXIMUM STAGE	TIME OF MAX STAGE
+	HYDROGRAPH AT	WC16B	33.	12.08	4.	1.	1.	.02		
+	ROUTED TO	RRHV1	32.	12.17	4.	1.	1.	.02		
+									1141.45	12.17
+	HYDROGRAPH AT	WC17B	35.	12.17	5.	1.	1.	.04		
+	ROUTED TO	RRHV2	35.	12.17	5.	1.	1.	.04		
+									1140.32	12.17
+	2 COMBINED AT	CPHV1	67.	12.17	9.	2.	2.	.06		
+	ROUTED TO	RRHV3	66.	12.17	9.	2.	2.	.06		
+									1137.82	12.17
+	ROUTED TO	RRHV4	65.	12.25	9.	2.	2.	.06		
+									1141.72	12.25
+	HYDROGRAPH AT	WC18B	72.	12.17	9.	2.	2.	.06		
+	ROUTED TO	RRHV5	71.	12.17	9.	2.	2.	.06		
+									1136.73	12.17
+	HYDROGRAPH AT	WC19B	350.	12.08	44.	14.	13.	.21		
+	ROUTED TO	RRHV6	349.	12.08	44.	14.	13.	.21		
+									1138.57	12.08
+	HYDROGRAPH AT	PM3B	46.	12.17	5.	1.	1.	.06		
+	4 COMBINED AT	CPHV2	516.	12.08	67.	20.	19.	.39		
+	ROUTED TO	RRHV7	508.	12.17	67.	20.	19.	.39		
+									1127.74	12.17
+	HYDROGRAPH AT	WC20B	21.	12.08	3.	1.	1.	.01		
+	ROUTED TO	RRHV8	21.	12.17	3.	1.	1.	.01		
+									1132.45	12.17
+	2 COMBINED AT	CPHV3	528.	12.17	70.	20.	20.	.40		
+	ROUTED TO	RRHV9	523.	12.17	70.	20.	20.	.40		
+									1123.09	12.17
+	HYDROGRAPH AT	WC21B	27.	12.17	4.	1.	1.	.02		
+	ROUTED TO	RRHV10	26.	12.25	4.	1.	1.	.02		
+									1129.29	12.25
+	HYDROGRAPH AT	PM4B	151.	12.08	17.	5.	5.	.14		
+	3 COMBINED AT	CPHV4	695.	12.17	91.	26.	25.	.57		
+	ROUTED TO	RRHV11	692.	12.17	91.	26.	25.	.57		
+									1118.75	12.17
+	HYDROGRAPH AT	WC22B	9.	12.08	1.	0.	0.	.01		
+	ROUTED TO	RRHV12	9.	12.25	1.	0.	0.	.01		
+									1123.62	12.25

+	2 COMBINED AT	CPHV5	700.	12.17	92.	26.	25.	.57		
+	ROUTED TO	RRHV13	686.	12.17	92.	26.	25.	.57		
+									1115.86	12.17
+	HYDROGRAPH AT	WC23B	604.	12.17	97.	32.	31.	.40		
+	ROUTED TO	RRHV14	604.	12.17	97.	32.	31.	.40		
+									1121.74	12.17
+	2 COMBINED AT	CPHV6	1290.	12.17	189.	58.	56.	.97		
+	ROUTED TO	RRHV15	1217.	12.25	188.	58.	56.	.97		
+									1106.76	12.25
+	HYDROGRAPH AT	PM5B	134.	12.25	18.	5.	5.	.13		
+	2 COMBINED AT	CPHV7	1351.	12.25	207.	63.	61.	1.10		
+	ROUTED TO	HV7BSN	20.	12.17	20.	12.	12.	1.10		
+									6.13	17.92
+	ROUTED TO	RRHV16	20.	12.42	20.	12.	12.	1.10		
+	HYDROGRAPH AT	A43A2B	127.	12.17	18.	5.	5.	.09		
+	ROUTED TO	RRHV17	123.	12.17	18.	5.	5.	.09		
+									1099.44	12.17
+	ROUTED TO	RRHV18	71.	12.75	18.	5.	5.	.09		
+									1086.21	12.75
+	HYDROGRAPH AT	NWSM1B	168.	12.08	28.	9.	9.	.13		
+	ROUTED TO	RR43B1	166.	12.17	28.	9.	9.	.13		
+									1168.55	12.17
+	ROUTED TO	RR43B2	161.	12.17	28.	9.	9.	.13		
+									1118.16	12.17
+	HYDROGRAPH AT	A43A1B	235.	12.08	25.	7.	7.	.17		
+	2 COMBINED AT	CPHV9	382.	12.08	52.	16.	16.	.30		
+	ROUTED TO	RRHV19	348.	12.33	52.	16.	16.	.30		
+									1091.34	12.33
+	2 COMBINED AT	CPHV10	373.	12.42	70.	22.	21.	.39		
+	ROUTED TO	RRHV20	337.	12.58	70.	22.	21.	.39		
+									1075.40	12.58
+	HYDROGRAPH AT	ED47B	1159.	12.08	112.	31.	30.	.81		
+	3 COMBINED AT	CPHV11	1197.	12.08	199.	64.	62.	2.30		
+	DIVERSION TO	DIR55B	331.	12.08	44.	13.	13.	2.30		
+	HYDROGRAPH AT	DFED47	866.	12.08	155.	51.	49.	2.30		
+	ROUTED TO	RRHV21	752.	12.33	155.	50.	48.	2.30		
+									1060.39	12.33
+	ROUTED TO	RRHV22	549.	13.00	153.	56.	54.	2.30		
+									1039.82	13.00
+	HYDROGRAPH AT	IR59B	435.	12.67	87.	22.	21.	.66		

+	2 COMBINED AT	CPHV12	870.	12.92	238.	77.	75.	2.96		
+	DIVERSION TO	RCHV12	870.	.00	238.	77.	75.	2.96		
+	HYDROGRAPH AT	DIHV12	0.	.00	0.	0.	0.	2.96		
+	HYDROGRAPH AT	REED47	331.	12.08	44.	13.	13.	.00		
+	ROUTED TO	RRHV23	128.	13.92	40.	12.	12.	.00		
+									1061.18	13.92
+	HYDROGRAPH AT	IR55B	415.	12.50	73.	19.	18.	.53		
+	2 COMBINED AT	CIR55B	417.	12.50	110.	31.	30.	.53		
+	DIVERSION TO	RCIREB	417.	.00	110.	31.	30.	.53		
+	HYDROGRAPH AT	DIR55B	0.	.00	0.	0.	0.	.53		

1

SUMMARY OF KINEMATIC WAVE - MUSKINGUM-CUNGE ROUTING
(FLOW IS DIRECT RUNOFF WITHOUT BASE FLOW)

ISTAQ	ELEMENT	DT	PEAK	TIME TO PEAK	VOLUME	INTERPOLATED TO COMPUTATION INTERVAL DT	PEAK	TIME TO PEAK	VOLUME
		(MIN)	(CFS)	(MIN)	(IN)	(MIN)	(CFS)	(MIN)	(IN)
RRHV16	MANE	3.48	20.00	744.84	.41	5.00	20.00	745.00	.41

CONTINUITY SUMMARY (AC-FT) - INFLOW= .2456E+02 EXCESS= .0000E+00 OUTFLOW= .2437E+02 BASIN STORAGE= .2038E+00 PERCENT ERROR= -.1

*** NORMAL END OF HEC-1 ***

Hvfut 1

Hidden Valley Channel
Worksheet for Trapezoidal Channel

Project Description	
Worksheet	Hidden Valley Channel (Carver Wash to Estr
Flow Element	Trapezoidal Channel
Method	Manning's Formula
Solve For	Channel Depth

Input Data		
Mannings Coeffic	0.035	
Slope	006000	ft/ft
Left Side Slope	5.00	H : V
Right Side Slope	5.00	H : V
Bottom Width	10.00	ft
Discharge	,601.00	cfs

Results		
Depth	5.74	ft
Flow Area	222.3	ft²
Wetted Perim	68.55	ft
Top Width	67.42	ft
Critical Depth	4.87	ft
Critical Slope	0.012868	ft/ft
Velocity	7.20	ft/s
Velocity Head	0.81	ft
Specific Energ	6.55	ft
Froude Numb	0.70	
Flow Type	Subcritical	

Hidden Valley Channel
Cross Section for Trapezoidal Channel

Project Description	
Worksheet	Hidden Valley Channel (Carver Wash to Estr
Flow Element	Trapezoidal Channel
Method	Manning's Formula
Solve For	Channel Depth

Section Data		
Mannings Coeffic	0.035	
Slope	006000	ft/ft
Depth	5.74	ft
Left Side Slope	5.00	H : V
Right Side Slope	5.00	H : V
Bottom Width	10.00	ft
Discharge	,601.00	cfs

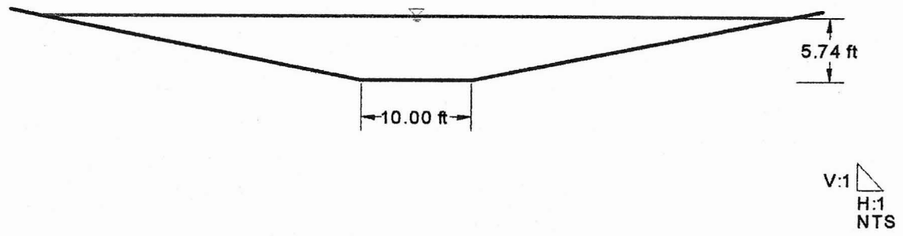

Estrella Road Storm Drain (47th to Reservation)
Worksheet for Circular Channel

Project Description	
Worksheet	Estrella Road Storm I
Flow Element	Circular Channel
Method	Manning's Formula
Solve For	Channel Depth

Input Data		
Mannings Coeffic	0.013	
Slope	006000	ft/ft
Diameter	36	in
Discharge	30.00	cfs

Results		
Depth	1.64	ft
Flow Area	4.0	ft²
Wetted Perime	5.00	ft
Top Width	2.99	ft
Critical Depth	1.77	ft
Percent Full	54.7	%
Critical Slope	0.004683	ft/ft
Velocity	7.58	ft/s
Velocity Head	0.89	ft
Specific Energy	2.53	ft
Froude Numbe	1.16	
Maximum Disc	55.57	cfs
Discharge Full	51.66	cfs
Slope Full	0.002023	ft/ft
Flow Type	Supercritical	

Estrella Road Storm Drain (47th to Reservation)
Cross Section for Circular Channel

Project Description	
Worksheet	Estrella Road Storm I
Flow Element	Circular Channel
Method	Manning's Formula
Solve For	Channel Depth

Section Data		
Mannings Coeffic	0.013	
Slope	006000	ft/ft
Depth	1.64	ft
Diameter	36	in
Discharge	30.00	cfs

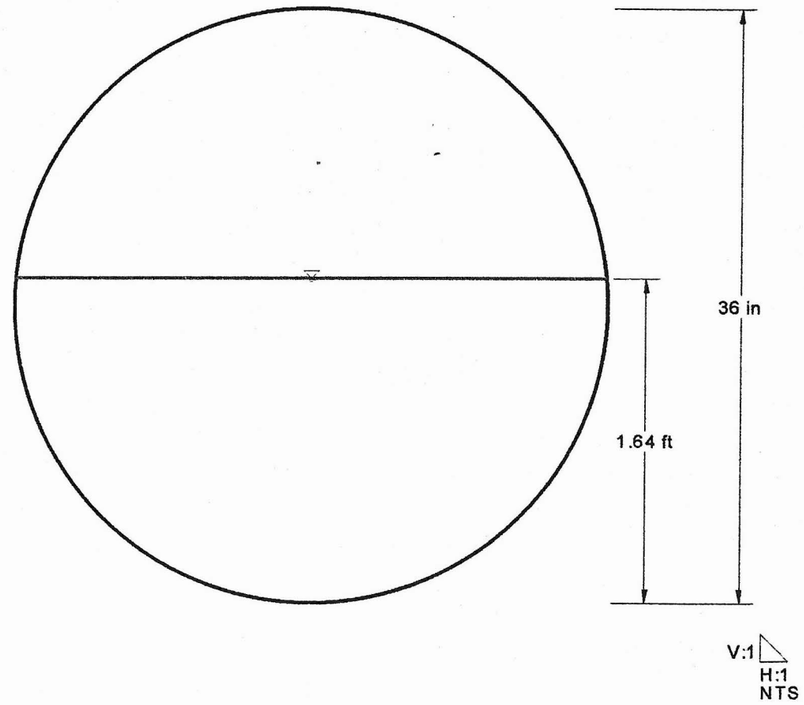

```
1**************************************
 *                                    *
 *   FLOOD HYDROGRAPH PACKAGE  (HEC-1)*
 *             JUN   1998             *
 *          VERSION 4.1               *
 *                                    *
 *  RUN DATE   27JUN01  TIME  11:42:34*
 *                                    *
 **************************************
```

```
**************************************
*                                    *
*  U.S. ARMY CORPS OF ENGINEERS      *
*  HYDROLOGIC ENGINEERING CENTER     *
*       609 SECOND STREET            *
*     DAVIS, CALIFORNIA 95616        *
*       (916) 756-1104               *
*                                    *
**************************************
```

```
X     X  XXXXXXX   XXXXX          X
X     X  X        X     X        XX
X     X  X        X              X
XXXXXXX  XXXX     X        XXXXX  X
X     X  X        X              X
X     X  X        X     X        X
X     X  XXXXXXX   XXXXX         XXX
```

THIS PROGRAM REPLACES ALL PREVIOUS VERSIONS OF HEC-1 KNOWN AS HEC1 (JAN 73), HEC1GS, HEC1DB, AND HEC1KW.

THE DEFINITIONS OF VARIABLES -RTIMP- AND -RTIOR- HAVE CHANGED FROM THOSE USED WITH THE 1973-STYLE INPUT STRUCTURE.
THE DEFINITION OF -AMSKK- ON RM-CARD WAS CHANGED WITH REVISIONS DATED 28 SEP 81. THIS IS THE FORTRAN77 VERSION
NEW OPTIONS: DAMBREAK OUTFLOW SUBMERGENCE , SINGLE EVENT DAMAGE CALCULATION, DSS:WRITE STAGE FREQUENCY,
DSS:READ TIME SERIES AT DESIRED CALCULATION INTERVAL LOSS RATE:GREEN AND AMPT INFILTRATION
KINEMATIC WAVE: NEW FINITE DIFFERENCE ALGORITHM

1 HEC-1 INPUT PAGE 1

```
LINE          ID.....1.....2.....3.....4.....5.....6.....7.....8.....9.....10
   1          ID    LAVEEN ADMS (FINAL HEC-1) 100-YR 24-HR STORM          CBA FILE # 40916-02-30
   2          ID    HIDDEN VALLEY WATERSHED/CHAMPION DRAIN WATERSHED
   3          ID    INPUT FILE NAME  HDNVLLY.DAT (FORMERLY CHAMPION24)     DATE: NOVEMBER 2000
   4          ID    FILE NAME CHANGED BY PROJECT ENGINEERING CONSULTANTS, LTD. FOR LAVEEN ADMP
   5          ID    24-HOUR SCS TYPE II RAINFALL
              *DIAGRAM
   6          IT       5                    300
   7          IO       3       0

   8          KK   WC16B
   9          KM   SUB-BASIN WC16B -LAND USE - NATURAL DESERT HILLSLOPES,MINOR DEVELOPMENT
  10          KM   24-HOUR TYPE II RAINFALL WAS USED TO FIND TC & R FOR THIS BASIN
  11          KM   THIS BASIN USED RAINFALL REDUCTION FACTOR OF .97
  12          BA    .023
  13          IN     30
  14          KM   RAINFALL DEPTH OF 4.20 WAS SPACIALLY REDUCED AS SHOWN ON THE PB RECORD
  15          PB   4.074
  16          KM   THE FOLLOWING PC RECORDS REPRESENT A 24-HR SCS TYPE II STORM
  17          PC    .000    .005    .011    .016    .022    .028    .035    .041    .048    .056
  18          PC    .068    .071    .080    .089    .098    .109    .120    .133    .147    .163
  19          PC    .181    .204    .235    .283    .663    .735    .772    .799    .820    .838
  20          PC    .854    .868    .880    .891    .902    .912    .921    .929    .937    .945
  21          PC    .952    .959    .965    .972    .978    .984    .989    .995   1.000
  22          LG    .150    .255   7.200    .123    .000
  23          UC    .233    .266
  24          UA       0       3       5       8      12      20      43      75      90      96
  25          UA     100

  26          KK   RRHV1
  27          KM   ROUTE FLOW FROM SUB-BASIN WC16B TO COMPUTATION POINT CPHV1
  28          RS       1    ELEV    1141
  29          RC   0.035   0.040   0.035     540   0.011    1146
  30          RX       0      25      80     120     140     170     240     310
  31          RY    1146    1144    1142    1141    1141    1142    1144    1146

  32          KK   WC17B
  33          KM   SUB-BASIN WC17B -LAND USE - DESERT MOUNTAIN,DESERT HILLS;MINOR DEVELOPMENT
  34          KM   24-HOUR TYPE II RAINFALL WAS USED TO FIND TC & R FOR THIS BASIN
  35          KM   THIS BASIN USED RAINFALL REDUCTION FACTOR OF .97
  36          BA    .035
  37          LG    .150    .276   4.050    .361   5.000
  38          UC    .267    .424
  39          UA       0       3       5       8      12      20      43      75      90      96
  40          UA     100

  41          KK   RRHV2
  42          KM   ROUTE FLOW FROM SUB-BASIN WC17B TP COMPUTATION POINT CPHV1
  43          RS       1    ELEV    1140
  44          RC   0.035   0.040   0.035     230   0.030    1142
  45          RX       0      40      80      90     100     110     150     190
  46          RY    1143    1142    1140    1140    1140    1140    1141    1142
```

1 HEC-1 INPUT PAGE 2

```
LINE          ID.....1.....2.....3.....4.....5.....6.....7.....8.....9.....10

  47          KK   CPHV1
  48          KM   COMBINE ROUTED FLOW FROM SUB-BASINS WC16B AND WC17B
```



```
  49          HC       2

  50          KK   RRHV3
  51          KM   ROUTE FLOW FROM COMPUTATION POINT CPHV1 TO COMPUTATION POINT CPHV2(1ST REACH)
  52          RS       1    ELEV    1137
  53          RC   0.035   0.040   0.035     400   0.010    1140
  54          RX       0      30      40      60      70     110     150     180
  55          RY    1141    1140    1138    1137    1137    1138    1139    1140

  56          KK   RRHV4
  57          KM   ROUTE FLOW FROM COMPUTATION POINT CPHV1 TO COMPUTATION POINT CPHV2(2ND REACH)
  58          RS       1    ELEV    1141
  59          RC   0.035   0.040   0.035     400   0.010    1146
  60          RX       0      50     100     130     150     170     220     290
  61          RY    1146    1144    1142    1141    1141    1142    1144    1146

  62          KK   WC18B
  63          KM   SUB-BASIN WC18B -LAND USE - NATURAL DESERT HILLSLOPES,MINOR DEVELOPMENT
  64          KM   24-HOUR TYPE II RAINFALL WAS USED TO FIND TC & R FOR THIS BASIN
  65          KM   THIS BASIN USED RAINFALL REDUCTION FACTOR OF .97
  66          BA    .060
  67          LG    .150    .265   4.100    .236    .000
  68          UC    .300    .338
  69          UA       0       3       5       8      12      20      43      75      90      96
  70          UA     100

  71          KK   RRHV5
  72          KM   ROUTE FLOW FROM SUB-BASIN WC18B TO COMPUTATION POINT CPHV2
  73          RS       1    ELEV    1136
  74          RC   0.035   0.040   0.035     650   0.017    1140
  75          RX       0      60     120     140     160     190     220     240
  76          RY    1140    1139    1138    1136    1136    1138    1139    1140

  77          KK   WC19B
  78          KM   SUB-BASIN WC19B -LAND USE - DESERT MOUNTAIN,DESERT HILLS;MINOR DEVELOPMENT
  79          KM   24-HOUR TYPE II RAINFALL WAS USED TO FIND TC & R FOR THIS BASIN
  80          KM   THIS BASIN USED RAINFALL REDUCTION FACTOR OF .97
  81          BA    .210
  82          LG    .150    .276   3.520    .265  40.000
  83          UC    .217    .162
  84          UA       0       3       5       8      12      20      43      75      90      96
  85          UA     100

  86          KK   RRHV6
  87          KM   ROUTE FLOW FROM SUB-BASIN WC19B TO COMPUTATION POINT CPHV2
  88          RS       1    ELEV    1137
  89          RC   0.035   0.040   0.035     640   0.018    1139
  90          RX       0      10      30      45      60      75     110     140
  91          RY    1139  1138.5    1138    1137    1137    1138    1139    1140
```

1 HEC-1 INPUT PAGE 3

```
LINE          ID.....1.....2.....3.....4.....5.....6.....7.....8.....9.....10

  92          KK    PM3B
  93          KM   SUB-BASIN PM3B -LAND USE - NATURAL DESERT HILLSLOPES,MINOR DEVELOPMENT
  94          KM   24-HOUR TYPE II RAINFALL WAS USED TO FIND TC & R FOR THIS BASIN
  95          KM   THIS BASIN USED RAINFALL REDUCTION FACTOR OF .97
  96          BA    .060
  97          LG    .150    .345   3.100    .946   5.000
  98          UC    .283    .273
  99          UA       0       3       5       8      12      20      43      75      90      96
 100          UA     100

 101          KK   CPHV2
 102          KM   COMBINE ROUTED FLOW FROM CPHV1, WC18B, WC19B WITH RUNOFF FROM SUB-BASIN PM3B
 103          HC       4

 104          KK   RRHV7
 105          KM   ROUTE FLOW FROM COMPUTATION CPHV2 TO COMPUTATION POINT CPHV3
 106          RS       1    ELEV    1126
 107          RC   0.035   0.040   0.035     750   0.011    1130
 108          RX       0      40      90     160     190     210     250     390
 109          RY    1130    1129    1128    1126    1126    1128    1132    1133

 110          KK   WC20B
 111          KM   SUB-BASIN WC20B -LAND USE - NATURAL DESERT HILLSLOPES,MINOR DEVELOPMENT
 112          KM   24-HOUR TYPE II RAINFALL WAS USED TO FIND TC & R FOR THIS BASIN
 113          KM   THIS BASIN USED RAINFALL REDUCTION FACTOR OF .97
 114          BA    .014
 115          LG    .150    .250   8.600    .066    .000
 116          UC    .233    .259
 117          UA       0       3       5       8      12      20      43      75      90      96
 118          UA     100

 119          KK   RRHV8
 120          KM   ROUTE FLOW FROM SUB-BASIN WC20B TO COMPUTATION POINT CPHV3
 121          RS       1    ELEV    1132
 122          RC   0.035   0.035   0.035     850   0.022  1134.5
 123          RX       0      10      20      30      40      60     170     220
 124          RY  1134.5    1134    1133    1132    1132    1134    1134  1134.5

 125          KK   CPHV3
 126          KM   COMBINE ROUTED FLOWS FROM SUB-BASIN WC20B AND  COMPUTATION POINT CPHV3
 127          HC       2
```

```
128          KK   RRHV9
129          KM   ROUTE FLOW FROM COMPUTATION CPHV3 TO COMPUTATION POINT CPHV4
130          RS      1    ELEV    1121
131          RC  0.035   0.040   0.035     780   0.008    1126
132          RX      0     100     130     150     165     180     290     350
133          RY   1126    1124    1122    1121    1121    1122    1124    1126
1                                        HEC-1 INPUT                                    PAGE  4

        LINE         ID.......1.......2.......3.......4.......5.......6.......7.......8.......9......10


134          KK   WC21B
135          KM   SUB-BASIN WC21B -LAND USE - NATURAL DESERT HILLSLOPES,MINOR DEVELOPMENT
136          KM   24-HOUR TYPE II RAINFALL WAS USED TO FIND TC & R FOR THIS BASIN
137          KM   THIS BASIN USED RAINFALL REDUCTION FACTOR OF .97
138          BA    .024
139          LG    .150    .265   4.100    .236    .000
140          UC    .283    .382
141          UA       0       3       5       8      12      20      43      75      90      96
142          UA     100

143          KK  RRHV10
144          KM   ROUTE FLOW FROM SUB-BASIN WC21B TO COMPUTATION POINT CPHV4
145          RS       2    ELEV    1129
146          RC  0.035   0.035   0.035    1110   0.022    1130
147          RX       0      25      50      75     100     125     175     200
148          RY    1130 1129.75  1129.5    1129    1129  1129.5 1129.75    1130

149          KK    PM4B
150          KM   SUB-BASIN PM4B -LAND USE - NATURAL DESERT HILLSLOPES,MINOR DEVELOPMENT
151          KM   24-HOUR TYPE II RAINFALL WAS USED TO FIND TC & R FOR THIS BASIN
152          KM   THIS BASIN USED RAINFALL REDUCTION FACTOR OF .97
153          BA    .140
154          LG    .150    .327   3.450    .764  15.000
155          UC    .283    .188
156          UA       0       3       5       8      12      20      43      75      90      96
157          UA     100

158          KK   CPHV4
159          KM   COMBINE ROUTED FLOWS FROM SUB-BASINS WC21B PM4B AND  COMPUTATION POINT CPHV4
160          HC       3

161          KK  RRHV11
162          KM   ROUTE FLOW FROM COMPUTATION CPHV4 TO COMPUTATION POINT CPHV5
163          RS       1    ELEV    1116
164          RC  0.035   0.040   0.035     340   0.006    1121
165          RX       0     100     150     170     190     220     280     340
166          RY    1121    1120    1118    1116    1116    1118    1120    1121

167          KK   WC22B
168          KM   SUB-BASIN WC22B -LAND USE - NATURAL DESERT HILLSLOPES,MINOR DEVELOPMENT
169          KM   24-HOUR TYPE II RAINFALL WAS USED TO FIND TC & R FOR THIS BASIN
170          KM   THIS BASIN USED RAINFALL REDUCTION FACTOR OF .97
171          BA    .007
172          LG    .150    .260   5.800    .179    .000
173          UC    .217    .304
174          UA       0       3       5       8      12      20      43      75      90      96
175          UA     100

176          KK  RRHV12
177          KM   ROUTE FLOW FROM SUB-BASIN WC22B TO COMPUTATION POINT CPHV5
178          RS       3    ELEV  1123.5
179          RC  0.035   0.040   0.035    1020   0.023  1124.5
180          RX       0      30      70      90     100     120     135     160
181          RY  1124.5    1124  1123.5  1123.5  1123.5  1123.5    1124  1124.5
1                                        HEC-1 INPUT                                    PAGE  5

        LINE         ID.......1.......2.......3.......4.......5.......6.......7.......8.......9......10


182          KK   CPHV5
183          KM   COMBINE ROUTED FLOWS FROM SUB-BASIN WC22B AND  COMPUTATION POINT CPHV4
184          HC       2

185          KK  RRHV13
186          KM   ROUTE FLOW FROM COMPUTATION CPHV5 TO COMPUTATION POINT CPHV6
187          RS       1    ELEV    1114
188          RC  0.035   0.040   0.035     430   0.005    1116
189          RX       0      70     130     160     180     220     340     410
190          RY    1117    1116    1116    1114    1114    1115    1115    1116

191          KK   WC23B
192          KM   SUB-BASIN WC23B -LAND USE - DESERT MOUNTAIN,DESERT HILLS;MINOR DEVELOPMENT
193          KM   24-HOUR TYPE II RAINFALL WAS USED TO FIND TC & R FOR THIS BASIN
194          KM   THIS BASIN USED RAINFALL REDUCTION FACTOR OF .97
195          BA    .400
196          LG    .150    .300   4.120    .253  60.000
197          UC    .300    .247
198          UA       0       3       5       8      12      20      43      75      90      96
199          UA     100

200          KK  RRHV14
201          KM   ROUTE FLOW FROM SUB-BASIN WC23B AND TO COMPUTATION POINT CPHV6
202          RS       1    ELEV    1120
203          RC  0.035   0.035   0.035    1020   0.027  1122.5
204          RX       0      40      80     100     120     140     170     210
```



```
205          RY  1122.5    1122  1121.5    1120    1120  1121.5    1122  1122.5

206          KK   CPHV6
207          KM   COMBINE ROUTED FLOWS FROM SUB-BASIN WC23B AND  COMPUTATION POINT CPHV5
208          HC       2

209          KK  RRHV15
210          KM   ROUTE FLOW FROM COMPUTATION CPHV6 TO COMPUTATION POINT CPHV7
211          RS       2    ELEV    1105
212          RC  0.035   0.040   0.035    1980   0.008    1110
213          RX       0     170     430     470     490     530     580     630
214          RY    1110    1106    1106    1105    1105    1106    1108    1110

215          KK    PM5B
216          KM   SUB-BASIN PM5B -LAND USE - NATURAL DESERT HILLSLOPES,MINOR DEVELOPMENT
217          KM   24-HOUR TYPE II RAINFALL WAS USED TO FIND TC & R FOR THIS BASIN
218          KM   THIS BASIN USED RAINFALL REDUCTION FACTOR OF .97
219          BA    .130
220          LG    .150    .310   4.200    .518  15.000
221          UC    .433    .307
222          UA       0       3       5       8      12      20      43      75      90      96
223          UA     100
1                                        HEC-1 INPUT                                    PAGE  6

        LINE         ID.......1.......2.......3.......4.......5.......6.......7.......8.......9......10


224          KK   CPHV7
225          KM   COMBINE ROUTED FLOWS FROM SUB-BASIN PM5B AND  COMPUTATION POINT CPHV6
226          HC       2

227          KK  RRHV16
228          KM   ROUTE FLOW FROM COMPUTATION CPHV7 TO COMPUTATION POINT CPHV8
229          RS       1    ELEV    1097
230          RC  0.065   0.065   0.065     400   0.008    1100
231          RX       0     210     315     430     540     640     800     930
232          RY    1100    1098    1098    1097    1097    1098    1099    1100

233          KK  A43A2B
234          KM   SUB-BASIN A43A2B -LAND USE - DESERT MOUNTAIN,DESERT HILLS;MINOR DEVELOPMENT
235          KM   24-HOUR TYPE II RAINFALL WAS USED TO FIND TC & R FOR THIS BASIN
236          KM   THIS BASIN USED RAINFALL REDUCTION FACTOR OF .97
237          BA    .090
238          LG    .150    .279   6.300    .174  30.000
239          UC    .317    .274
240          UA       0       3       5       8      12      20      43      75      90      96
241          UA     100

242          KK  RRHV17
243          KM   ROUTE FLOW FROM SUB-BASIN A43A2B TO COMPUTATION POINT CPHV8
244          RS       1    ELEV    1099
245          RC  0.065   0.065   0.065     440   0.015    1100
246          RX       0     105     135     165     190     210     260     320
247          RY    1100    1099    1099    1099    1099    1099    1099    1100

248          KK   CPHV8
249          KM   COMBINE ROUTED FLOWS FROM SUB-BASIN A43A2B AND  COMPUTATION POINT CPHV7
250          HC       2

251          KK  RRHV18
252          KM   ROUTE FLOW FROM COMPUTATION CPHV8 TO COMPUTATION POINT CPHV10
253          RS       3    ELEV    1086
254          RC  0.065   0.065   0.065    2200   0.008    1088
255          RX       0      80     200     300     360     440     550     610
256          RY    1088    1086    1086    1086    1086    1086    1086    1088

257          KK  NWSM1B
258          KM   SUB-BASIN NWSM1B -LAND USE - DESERT MOUNTAIN;UNDEVELOPED
259          KM   24-HOUR TYPE II RAINFALL WAS USED TO FIND TC & R FOR THIS BASIN
260          KM   THIS BASIN USED RAINFALL REDUCTION FACTOR OF .97
261          BA    .130
262          LG    .150    .345   2.500   1.143  60.000
263          UC    .267    .226
264          UA       0       3       5       8      12      20      43      75      90      96
265          UA     100
1                                        HEC-1 INPUT                                    PAGE  7

        LINE         ID.......1.......2.......3.......4.......5.......6.......7.......8.......9......10


266          KK  RR43B1
267          KM   ROUTE FLOW FROM SUB-BASIN NWSM1B TO COMPUTATION POINT CPHV9 (1ST REACH)
268          RS       1    ELEV    1168
269          RC  0.035   0.040   0.035    1850   0.47    1172
270          RX       0      40     100     120     135     150     190     240
271          RY    1172  1171.5    1170    1168    1168    1170  1171.5    1172

272          KK  RR43B2
273          KM   ROUTE FLOW FROM SUB-BASIN NWSM1B TO COMPUTATION POINT CPHV9 ( 2ND REACH )
274          RS       2    ELEV    1118
275          RC  0.035   0.040   0.035    1000   0.034    1120
276          RX       0      50     110     410     580     850     970    1160
277          RY    1120    1119    1119    1118    1118    1118    1119    1120

278          KK  A43A1B
279          KM   SUB-BASIN A43A1B -LAND USE - DESERT MOUNTAINS,DESERT HILLS;MINOR DEVELOPMENT
```

```
KM   24-HOUR TYPE II RAINFALL WAS USED TO FIND TC & R FOR THIS BASIN
KM   THIS BASIN USED RAINFALL REDUCTION FACTOR OF .97
BA    .170
LG    .150    .285   4.100    .463  15.000
UC    .283    .151
UA       0       3       5       8      12      20      43      75      90      96
UA     100

KK   CPHV9
KM   COMBINE ROUTED FLOW FROM SUB-BASIN NWSM1B WITH RUNOFF FROM SUB-BASIN A43A1B
HC       2

KK  RRHV19
KM   ROUTE FLOW FROM COMPUTATION CPHV9 TO COMPUTATION POINT CPHV10
RS       5    ELEV    1091
RC   0.065   0.065   0.065    1700   0.014    1092
RX       0      60     450     530     610     690     830     960
RY    1092    1091    1091    1091    1091    1091    1091    1092

KK  CPHV10
KM   COMBINE ROUTED FLOWS FROM COMPUTATION POINTS CPHV8 AND CPHV9
HC       2

KK  RRHV20
KM       ROUTE FLOW FROM COMPUTATION CPHV10 TO COMPUTATION POINT CPHV11
RS       2    ELEV  1074.5
RC   0.065   0.065   0.065    1100  0.0085    1078
RX       0      90     480     510     520     530     870    1300
RY    1078    1076  1074.5  1074.5  1074.5  1074.5    1076    1078

KK   ED47B
KM   SUB-BASIN ED47B -LAND USE - AGRICULTURE,DESERT MOUNTAIN,DESERT HILLS;MODERATE
KM   DEVELOPMENT
KM   24-HOUR TYPE II RAINFALL WAS USED TO FIND TC & R FOR THIS BASIN
KM   THIS BASIN USED RAINFALL REDUCTION FACTOR OF .97
BA    .810
LG    .330    .094   4.100    .629  10.000
UC    .283    .114
```

1 HEC-1 INPUT PAGE 8

```
LINE  ID.......1.......2.......3.......4.......5.......6.......7.......8.......9......10

UA       0       3       5       8      12      20      43      75      90      96
UA     100

KK  CPHV11
KM   COMBINE ROUTED FLOWS FROM COMPUTATION POINT CPHV10 TO RUNOFF FROM SUB-BASIN
KM   ED47B
HC       2
*
*
*
*
*
*
*
*
*
*
* **********************BASIN ADDED HERE FOR ADMP*******************************
*
*
*
*
*
*
*
*
*

KK  BASN11
KM   **********************BASIN AT 47TH AND ESTRELLA ROAD************************
KM   BASIN AT THIS LOCATION TO REDUCE FLOWS TO THE WEST
KM   THE BASIN HAS A 30 ACRE TOP AND A 23.1 ACRE BOTTOM AREA AND IS 14 FEET DEEP
RS       1    ELEV      -1
SA    23.1    24.1    25.1    26.1    27.0    28.0    29.0      30
SQ       0      30      30      30      30      30      30      30
SE       0       2       4       6       8      10      12      14
*
*
*
* SMALL OUTFLOWS WILL WILL USE THE EXISTING DITCH ALONG ESTRELLA ROAD
*
*
*

KK  DFED47
KM   RATE CHANNEL CROSSECTION AT COMPUTATION POINT ED47B FOR SPLIT FLOW
KM   DIVERTED FLOW IS ROUTED THROUGH SUB BASIN IR55B
DT  DIR55B
DI       0     139     558    1324    2507
DQ       0      20     126     372     801
```

1 HEC-1 INPUT PAGE 9

```
LINE  ID.......1.......2.......3.......4.......5.......6.......7.......8.......9......10
```



```
KK  RRHV21
KM   ROUTE FLOW FROM COMPUTATION POINT CPHV11 TO COMPUTATION POINT CPHV12
KM   (1ST REACH)
RS       5    ELEV  1059.5
RC   0.015   0.065   0.065    2660   0.006  1060.7
RX       0      30      60     150     180     600     660     690
RY  1060.7  1060.0    1060    1060  1059.5  1059.5    1060  1060.7

KK  RRHV22
KM   ROUTE FLOW FROM COMPUTATION POINT CPHV11 TO COMPUTATION POINT CPHV12
KM    (2ND REACH)
RS       7    ELEV  1039.5
RC     .07     .07     .07    2724   0.007  1040.1
RX       0     230     700     701    1260    1261    1480    1520
RY  1040.1    1039  1039.5  1039.5  1039.5  1039.5    1040  1040.1

KK   IR59B
KM   SUB-BASIN IR59B -LAND USE - AGRICULTURE; MINOR DEVELOPMENT
KM   24-HOUR TYPE II RAINFALL WAS USED TO FIND TC & R FOR THIS BASIN
KM   THIS BASIN USED RAINFALL REDUCTION FACTOR OF .97
BA    .660
LG    .500    .000   3.990    .636    .000
UC    .883    .610
UA       0     1.6       5    10.6    19.5      32      44      56      70      82
UA     100

KK  CPHV12
KM    COMBINE ROUTED FLOW FROM COMPUTATION POINT CPHV11 TO RUNOFF FROM SUB-BASIN
KM    IR59B
HC       2

KK  DIHV12
KM    THE WESTERN EDGE OF SUB-BASIN IR59B WHICH IS ALSO THE WESTERN EDGE OF THE
KM    STUDY AREA IS BOUNDED  BY A CONCRETE IRRIGATION CANAL AND EARTHEN ROADWAY
KM    THE EARTHEN ROADWAY HAS A CAPACITY TO CONVEY  APPROXIMATELY 65 CFS TO THE
KM    NORTH WEST BEFORE THE CONCRETE IRRIGATION CANAL IS OVERTOPPED AND FLOW
KM    CONTINUES TO DRAIN TO THE WEST. THEREFORE APPROXIMATELY 65 CFS WILL
KM    CONCENTRATE AT COMPUTATION POINT CPHV12. AT COMPUTATION POINT CPHV12
KM    A DIP SECTION IN THE EARTHEN ROADWAY WILL DRAIN APPROXIMATELY 684 CFS
KM    TO THE WEST. ALL OF THE FLOW CONCENTRATED AT COMPUTATION CPHV12 PASSES
KM    OUT OF THE STUDY AREA.
DT  RCHV12
DI       0     100     200     400     600     800     900    1000    1200    1400
DQ       0     100     200     400     600     800     900    1000    1200    1400

KK  REED47
KM   RETRIVE DIVERTED FLOW FROM COMPUTATION POINT CPHV11
DR  DIR55B
```

1 HEC-1 INPUT PAGE 10

```
LINE  ID.......1.......2.......3.......4.......5.......6.......7.......8.......9......10

KK  RRHV23
KM   ROUTE DIVERTED FLOW FROM COMPUTATION POINT CPHV11 THROUGH SUB-BASIN IR55B
RS      19    ELEV    1061
RC    0.07    0.07    0.07    4800   0.006
RX       0     240     470     620     830    1200    1520    1740
RY    1062    1061    1061    1061    1061    1061    1061    1062

KK   IR55B
KM   SUB-BASIN IR55B -LAND USE - AGRICULTURE;MINOR DEVELOPMENT
KM   24-HOUR TYPE II RAINFALL WAS USED TO FIND TC & R FOR THIS BASIN
KM   THIS BASIN USED RAINFALL REDUCTION FACTOR OF .97
BA    .530
LG    .480    .079   3.650    .502   5.000
UC    .850    .554
UA       0       3       5       8      12      20      43      75      90      96
UA     100

KK  CIR55B
KM    COMBINE ROUTED DIVERTED FLOW FROM COMPUTATION POINT CPHV11 WITH RUNOFF FROM
KM    SUB-BASIN IR55B
HC       2

KK  DIR55B
KM    THE WESTERN EDGE OF SUB-BASIN IR55B WHICH IS ALSO THE WESTERN EDGE OF THE
KM    STUDY AREA IS BOUNDED BY AN EARTHEN IRRIGATION CANAL. MINOR CONTAINMENT OF
KM    RUNOFF AND ROUTED FLOW WILL BE REALIZED. THEREFORE TOTAL FLOW AT COMPUTATION
KM    POINT CIR55B IS DIVERTED BECAUSE FLOW FROM THIS POINT DOES NOT CONTRIBUTE
KM    TO RUNOFF COMPUTATIONS DOWNSTREAM.
DT  RCIREB
DI       0     100     200     400     600     800
DQ       0     100     200     400     600     800
ZZ
```

1

SCHEMATIC DIAGRAM OF STREAM NETWORK

INPUT LINE NO.

(V) ROUTING (---->) DIVERSION OR PUMP FLOW

(.) CONNECTOR (<----) RETURN OF DIVERTED OR PUMPED FLOW

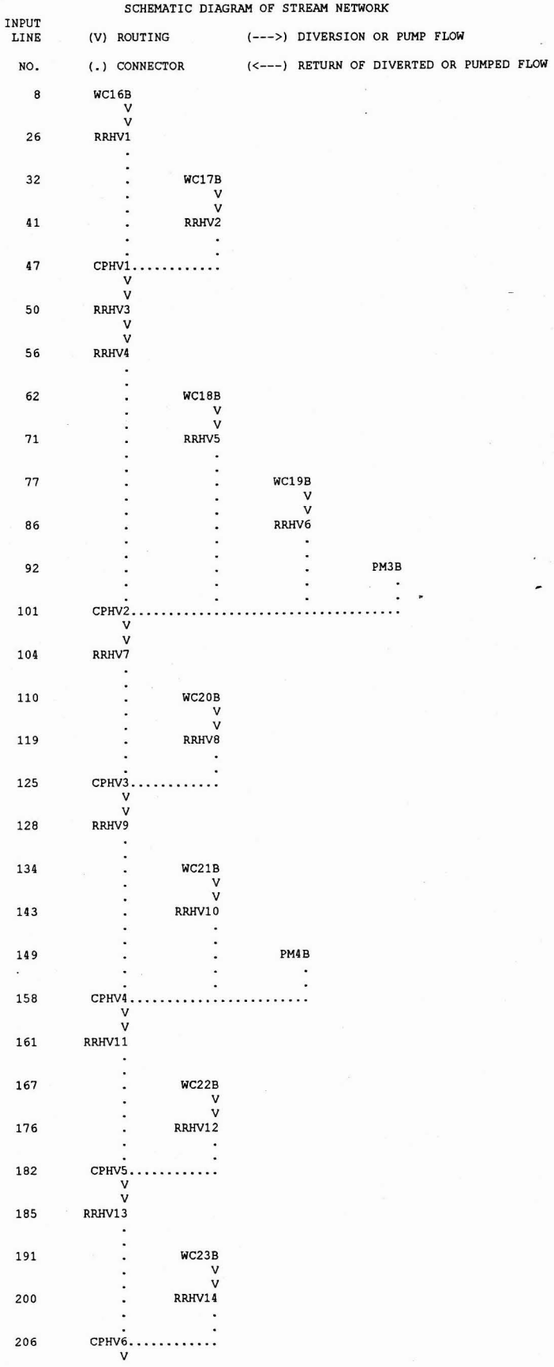

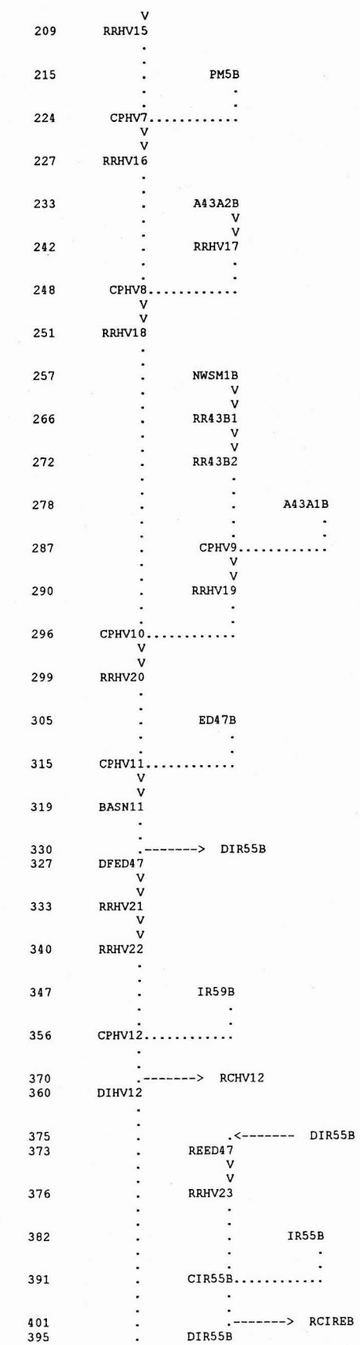

(***) RUNOFF ALSO COMPUTED AT THIS LOCATION

```
1*****************************************
*                                       *
*   FLOOD HYDROGRAPH PACKAGE  (HEC-1)   *
*              JUN  1998                *
*           VERSION 4.1                 *
*                                       *
*  RUN DATE   27JUN01  TIME  11:42:34   *
*                                       *
*****************************************
```

```
*****************************************
*                                       *
*   U.S. ARMY CORPS OF ENGINEERS        *
*   HYDROLOGIC ENGINEERING CENTER       *
*        609 SECOND STREET              *
*      DAVIS, CALIFORNIA 95616          *
*         (916) 756-1104                *
*                                       *
*****************************************
```

LAVEEN ADMS (FINAL HEC-1) 100-YR 24-HR STORM CBA FILE # 40916-02-30
HIDDEN VALLEY WATERSHED/CHAMPION DRAIN WATERSHED
INPUT FILE NAME HDNVLLY.DAT (FORMERLY CHAMPION24) DATE: NOVEMBER 2000
FILE NAME CHANGED BY PROJECT ENGINEERING CONSULTANTS, LTD. FOR LAVEEN ADMP
24-HOUR SCS TYPE II RAINFALL

7 IO OUTPUT CONTROL VARIABLES

IPRNT	3	PRINT CONTROL
IPLOT	0	PLOT CONTROL
QSCAL	0.	HYDROGRAPH PLOT SCALE

IT HYDROGRAPH TIME DATA

NMIN	5	MINUTES IN COMPUTATION INTERVAL
IDATE	1 0	STARTING DATE
ITIME	0000	STARTING TIME
NQ	300	NUMBER OF HYDROGRAPH ORDINATES
NDDATE	2 0	ENDING DATE
NDTIME	0055	ENDING TIME
ICENT	19	CENTURY MARK

COMPUTATION INTERVAL .08 HOURS
TOTAL TIME BASE 24.92 HOURS

ENGLISH UNITS

DRAINAGE AREA	SQUARE MILES
PRECIPITATION DEPTH	INCHES
LENGTH, ELEVATION	FEET
FLOW	CUBIC FEET PER SECOND
STORAGE VOLUME	ACRE-FEET
SURFACE AREA	ACRES
TEMPERATURE	DEGREES FAHRENHEIT

*** ***

```
**************
*            *
8 KK    *  WC16B  *
*            *
**************
```

SUB-BASIN WC16B -LAND USE - NATURAL DESERT HILLSLOPES,MINOR DEVELOPMENT
24-HOUR TYPE II RAINFALL WAS USED TO FIND TC & R FOR THIS BASIN
THIS BASIN USED RAINFALL REDUCTION FACTOR OF .97
RAINFALL DEPTH OF 4.20 WAS SPACIALLY REDUCED AS SHOWN ON THE PB RECORD
THE FOLLOWING PC RECORDS REPRESENT A 24-HR SCS TYPE II STORM

13 IN TIME DATA FOR INPUT TIME SERIES

JXMIN	30	TIME INTERVAL IN MINUTES
JXDATE	1 0	STARTING DATE
JXTIME	0	STARTING TIME

SUBBASIN RUNOFF DATA

12 BA SUBBASIN CHARACTERISTICS

TAREA	.02	SUBBASIN AREA

PRECIPITATION DATA

16 PB STORM 4.07 BASIN TOTAL PRECIPITATION

16 PI INCREMENTAL PRECIPITATION PATTERN

.00	.00	.00	.00	.00	.00	.00	.00	.00	.00
.00	.00	.00	.00	.00	.00	.00	.00	.00	.00
.00	.00	.00	.00	.00	.00	.00	.00	.00	.00
.00	.00	.00	.00	.00	.00	.00	.00	.00	.00
.00	.00	.00	.00	.00	.00	.00	.00	.00	.00
.00	.00	.00	.00	.00	.00	.00	.00	.00	.00
.00	.00	.00	.00	.00	.00	.00	.00	.00	.00
.00	.00	.00	.00	.00	.00	.00	.00	.00	.00
.00	.00	.00	.00	.00	.00	.00	.00	.00	.00
.00	.00	.00	.00	.00	.00	.00	.00	.00	.00
.00	.00	.00	.00	.00	.00	.00	.00	.00	.00
.00	.00	.00	.00	.00	.00	.01	.01	.01	.01
.01	.01	.01	.01	.01	.01	.01	.01	.06	.06
.06	.06	.06	.06	.01	.01	.01	.01	.01	.01
.01	.01	.01	.01	.01	.01	.00	.00	.00	.00
.00	.00	.00	.00	.00	.00	.00	.00	.00	.00
.00	.00	.00	.00	.00	.00	.00	.00	.00	.00
.00	.00	.00	.00	.00	.00	.00	.00	.00	.00

.00	.00	.00	.00	.00	.00	.00	.00	.00	.00
.00	.00	.00	.00	.00	.00	.00	.00	.00	.00
.00	.00	.00	.00	.00	.00	.00	.00	.00	.00
.00	.00	.00	.00	.00	.00	.00	.00	.00	.00
.00	.00	.00	.00	.00	.00	.00	.00	.00	.00
.00	.00	.00	.00	.00	.00	.00	.00	.00	.00
.00	.00	.00	.00	.00	.00	.00	.00	.00	.00
.00	.00	.00	.00	.00	.00	.00	.00	.00	.00
.00	.00	.00	.00	.00	.00	.00	.00	.00	.00
.00	.00	.00	.00	.00	.00	.00	.00	.00	.00

22 LG GREEN AND AMPT LOSS RATE

STRTL	.15	STARTING LOSS
DTH	.25	MOISTURE DEFICIT
PSIF	7.20	WETTING FRONT SUCTION
XKSAT	.12	HYDRAULIC CONDUCTIVITY
RTIMP	.00	PERCENT IMPERVIOUS AREA

23 UC CLARK UNITGRAPH

TC	.23	TIME OF CONCENTRATION
R	.27	STORAGE COEFFICIENT

24 UA ACCUMULATED-AREA VS. TIME, 11 ORDINATES

.0	3.0	5.0	8.0	12.0	20.0	43.0	75.0	90.0	96.0
100.0									

***

UNIT HYDROGRAPH PARAMETERS

CLARK	TC=	.23 HR,	R=	.27 HR
SNYDER	TP=	.23 HR,	CP=	.59

UNIT HYDROGRAPH
19 END-OF-PERIOD ORDINATES

2.	20.	37.	32.	23.	17.	12.	9.	7.	5.
4.	3.	2.	1.	1.	1.	1.	0.	0.	

*** *** *** *** ***

HYDROGRAPH AT STATION WC16B

TOTAL RAINFALL = 4.07, TOTAL LOSS = 2.54, TOTAL EXCESS = 1.54

PEAK FLOW	TIME	MAXIMUM AVERAGE FLOW			
		6-HR	24-HR	72-HR	24.92-HR
+ (CFS)	(HR)				
	(CFS)	4.	1.	1.	1.
+ 33.	12.08				
	(INCHES)	1.532	1.532	1.532	1.532
	(AC-FT)	2.	2.	2.	2.

CUMULATIVE AREA = .02 SQ MI

*** ***

```
**************
*            *
26 KK   *  RRHV1  *
*            *
**************
```

ROUTE FLOW FROM SUB-BASIN WC16B TO COMPUTATION POINT CPHV1

HYDROGRAPH ROUTING DATA

28 RS STORAGE ROUTING

NSTPS	1	NUMBER OF SUBREACHES
ITYP	ELEV	TYPE OF INITIAL CONDITION
RSVRIC	1141.00	INITIAL CONDITION
X	.00	WORKING R AND D COEFFICIENT

29 RC NORMAL DEPTH CHANNEL

ANL	.035	LEFT OVERBANK N-VALUE
ANCH	.040	MAIN CHANNEL N-VALUE
ANR	.035	RIGHT OVERBANK N-VALUE
RLNTH	540.	REACH LENGTH
SEL	.0110	ENERGY SLOPE
ELMAX	1146.0	MAX. ELEV. FOR STORAGE/OUTFLOW CALCULATION

CROSS-SECTION DATA
--- LEFT OVERBANK --- + ------ MAIN CHANNEL ------- + --- RIGHT OVERBANK ---

31 RY	ELEVATION	1146.00	1144.00	1142.00	1141.00	1141.00	1142.00	1144.00	1146.00
30 RX	DISTANCE	.00	25.00	80.00	120.00	140.00	170.00	240.00	310.00

***

COMPUTED STORAGE-OUTFLOW-ELEVATION DATA

STORAGE	.00	.10	.25	.47	.74	1.07	1.46	1.90	2.39	2.93
OUTFLOW	.00	10.27	39.67	92.50	177.62	313.90	490.38	711.16	979.93	1300.20
ELEVATION	1141.00	1141.26	1141.53	1141.79	1142.05	1142.32	1142.58	1142.84	1143.11	1143.37
STORAGE	3.53	4.19	4.89	5.64	6.43	7.25	8.12	9.03	9.98	10.97

OUTFLOW	1675.36	2108.67	2610.08	3178.47	3810.58	4508.01	5272.46	6105.65	7009.32	7985.47
ELEVATION	1143.63	1143.90	1144.16	1144.42	1144.68	1144.95	1145.21	1145.47	1145.74	1146.00

*** WARNING *** MODIFIED PULS ROUTING MAY BE NUMERICALLY UNSTABLE FOR OUTFLOWS BETWEEN 93. TO 7985.
THE ROUTED HYDROGRAPH SHOULD BE EXAMINED FOR OSCILLATIONS OR OUTFLOWS GREATER THAN PEAK INFLOWS.
THIS CAN BE CORRECTED BY DECREASING THE TIME INTERVAL OR INCREASING STORAGE (USE A LONGER REACH.)

*** *** *** *** ***

HYDROGRAPH AT STATION RRHV1

PEAK FLOW	TIME		MAXIMUM AVERAGE FLOW			
			6-HR	24-HR	72-HR	24.92-HR
+ (CFS)	(HR)					
		(CFS)				
+ 32.	12.17		4.	1.	1.	1.
		(INCHES)	1.532	1.532	1.532	1.532
		(AC-FT)	2.	2.	2.	2.

PEAK STORAGE	TIME	MAXIMUM AVERAGE STORAGE			
		6-HR	24-HR	72-HR	24.92-HR
+ (AC-FT)	(HR)				
0.	12.17	0.	0.	0.	0.

PEAK STAGE	TIME	MAXIMUM AVERAGE STAGE			
		6-HR	24-HR	72-HR	24.92-HR
+ (FEET)	(HR)				
1141.45	12.17	1141.07	1141.02	1141.02	1141.02

CUMULATIVE AREA = .02 SQ MI

*** ***

```
              **************
              *            *
32 KK         *   WC17B    *
              *            *
              **************
```

SUB-BASIN WC17B -LAND USE - DESERT MOUNTAIN,DESERT HILLS;MINOR DEVELOPMENT
24-HOUR TYPE II RAINFALL WAS USED TO FIND TC & R FOR THIS BASIN
THIS BASIN USED RAINFALL REDUCTION FACTOR OF .97

SUBBASIN RUNOFF DATA

36 BA SUBBASIN CHARACTERISTICS
TAREA .04 SUBBASIN AREA

PRECIPITATION DATA

16 PB STORM 4.07 BASIN TOTAL PRECIPITATION

16 PI INCREMENTAL PRECIPITATION PATTERN

.00	.00	.00	.00	.00	.00	.00	.00	.00	.00
.00	.00	.00	.00	.00	.00	.00	.00	.00	.00
.00	.00	.00	.00	.00	.00	.00	.00	.00	.00
.00	.00	.00	.00	.00	.00	.00	.00	.00	.00
.00	.00	.00	.00	.00	.00	.00	.00	.00	.00
.00	.00	.00	.00	.00	.00	.00	.00	.00	.00
.00	.00	.00	.00	.00	.00	.00	.00	.00	.00
.00	.00	.00	.00	.00	.00	.00	.00	.00	.00
.00	.00	.00	.00	.00	.00	.00	.00	.00	.00
.00	.00	.00	.00	.00	.00	.00	.00	.00	.00
.00	.00	.00	.00	.00	.00	.00	.00	.00	.00
.00	.00	.00	.00	.00	.00	.00	.00	.00	.00
.00	.00	.00	.00	.00	.00	.01	.01	.01	.01
.01	.01	.01	.01	.01	.01	.01	.01	.06	.06
.06	.06	.06	.06	.01	.01	.01	.01	.01	.01
.01	.01	.01	.01	.01	.01	.00	.00	.00	.00
.00	.00	.00	.00	.00	.00	.00	.00	.00	.00
.00	.00	.00	.00	.00	.00	.00	.00	.00	.00
.00	.00	.00	.00	.00	.00	.00	.00	.00	.00
.00	.00	.00	.00	.00	.00	.00	.00	.00	.00
.00	.00	.00	.00	.00	.00	.00	.00	.00	.00
.00	.00	.00	.00	.00	.00	.00	.00	.00	.00
.00	.00	.00	.00	.00	.00	.00	.00	.00	.00
.00	.00	.00	.00	.00	.00	.00	.00	.00	.00
.00	.00	.00	.00	.00	.00	.00	.00	.00	.00
.00	.00	.00	.00	.00	.00	.00	.00	.00	.00
.00	.00	.00	.00	.00	.00	.00	.00	.00	.00
.00	.00	.00	.00	.00	.00	.00	.00	.00	.00
.00	.00	.00	.00	.00	.00	.00	.00		

37 LG GREEN AND AMPT LOSS RATE
STRTL .15 STARTING LOSS
DTH .28 MOISTURE DEFICIT
PSIF 4.05 WETTING FRONT SUCTION
XKSAT .36 HYDRAULIC CONDUCTIVITY
RTIMP 5.00 PERCENT IMPERVIOUS AREA

38 UC CLARK UNITGRAPH
TC .27 TIME OF CONCENTRATION

R .42 STORAGE COEFFICIENT

39 UA ACCUMULATED-AREA VS. TIME, 11 ORDINATES

.0	3.0	5.0	8.0	12.0	20.0	43.0	75.0	90.0	96.0
100.0									

***

UNIT HYDROGRAPH PARAMETERS
CLARK TC= .27 HR, R= .42 HR
SNYDER TP= .28 HR, CP= .50

UNIT HYDROGRAPH
29 END-OF-PERIOD ORDINATES

2.	14.	33.	39.	33.	27.	22.	18.	15.	12.
10.	8.	7.	6.	5.	4.	3.	3.	2.	2.
1.	1.	1.	1.	1.	1.	0.	0.	0.	

*** *** *** *** ***

HYDROGRAPH AT STATION WC17B

TOTAL RAINFALL = 4.07, TOTAL LOSS = 2.73, TOTAL EXCESS = 1.34

PEAK FLOW	TIME		MAXIMUM AVERAGE FLOW			
			6-HR	24-HR	72-HR	24.92-HR
+ (CFS)	(HR)					
		(CFS)				
+ 35.	12.17		5.	1.	1.	1.
		(INCHES)	1.274	1.333	1.333	1.333
		(AC-FT)	2.	2.	2.	2.

CUMULATIVE AREA = .04 SQ MI

*** ***

```
              **************
              *            *
41 KK         *   RRHV2    *
              *            *
              **************
```

ROUTE FLOW FROM SUB-BASIN WC17B TP COMPUTATION POINT CPHV1

HYDROGRAPH ROUTING DATA

43 RS STORAGE ROUTING
NSTPS 1 NUMBER OF SUBREACHES
ITYP ELEV TYPE OF INITIAL CONDITION
RSVRIC 1140.00 INITIAL CONDITION
X .00 WORKING R AND D COEFFICIENT

44 RC NORMAL DEPTH CHANNEL
ANL .035 LEFT OVERBANK N-VALUE
ANCH .040 MAIN CHANNEL N-VALUE
ANR .035 RIGHT OVERBANK N-VALUE
RLNTH 230. REACH LENGTH
SEL .0300 ENERGY SLOPE
ELMAX 1142.0 MAX. ELEV. FOR STORAGE/OUTFLOW CALCULATION

CROSS-SECTION DATA

		--- LEFT OVERBANK --- +		------ MAIN CHANNEL -------			+ --- RIGHT OVERBANK ---		
46 RY	ELEVATION	1143.00	1142.00	1140.00	1140.00	1140.00	1140.00	1141.00	1142.00
45 RX	DISTANCE	.00	40.00	80.00	90.00	100.00	110.00	150.00	190.00

***

COMPUTED STORAGE-OUTFLOW-ELEVATION DATA

STORAGE	.00	.02	.04	.07	.09	.13	.16	.20	.25	.29
OUTFLOW	.00	4.88	16.59	34.76	59.61	91.50	130.80	177.92	233.26	297.24
ELEVATION	1140.00	1140.11	1140.21	1140.32	1140.42	1140.53	1140.63	1140.74	1140.84	1140.95
STORAGE	.34	.40	.45	.51	.58	.64	.72	.79	.87	.95
OUTFLOW	370.26	452.71	544.98	647.46	760.53	884.57	1019.95	1167.03	1326.17	1497.73
ELEVATION	1141.05	1141.16	1141.26	1141.37	1141.47	1141.58	1141.68	1141.79	1141.89	1142.00

*** WARNING *** MODIFIED PULS ROUTING MAY BE NUMERICALLY UNSTABLE FOR OUTFLOWS BETWEEN 5. TO 1498.
THE ROUTED HYDROGRAPH SHOULD BE EXAMINED FOR OSCILLATIONS OR OUTFLOWS GREATER THAN PEAK INFLOWS.
THIS CAN BE CORRECTED BY DECREASING THE TIME INTERVAL OR INCREASING STORAGE (USE A LONGER REACH.)

*** *** *** *** ***

HYDROGRAPH AT STATION RRHV2

PEAK FLOW	TIME		MAXIMUM AVERAGE FLOW			
			6-HR	24-HR	72-HR	24.92-HR
+ (CFS)	(HR)					
		(CFS)				
+ 35.	12.17		5.	1.	1.	1.
		(INCHES)	1.274	1.333	1.333	1.333
		(AC-FT)	2.	2.	2.	2.

PEAK STORAGE	TIME		MAXIMUM AVERAGE STORAGE			
			6-HR	24-HR	72-HR	24.92-HR
+ (AC-FT)	(HR)					
0.	12.17		0.	0.	0.	0.
PEAK STAGE	TIME		MAXIMUM AVERAGE STAGE			
			6-HR	24-HR	72-HR	24.92-HR
+ (FEET)	(HR)					
1140.32	12.17		1140.06	1140.01	1140.01	1140.01

CUMULATIVE AREA = .04 SQ MI

*** ***

47 KK — CPHV1

COMBINE ROUTED FLOW FROM SUB-BASINS WC16B AND WC17B

49 HC HYDROGRAPH COMBINATION
ICOMP 2 NUMBER OF HYDROGRAPHS TO COMBINE

***

HYDROGRAPH AT STATION CPHV1

PEAK FLOW	TIME		MAXIMUM AVERAGE FLOW			
			6-HR	24-HR	72-HR	24.92-HR
+ (CFS)	(HR)					
		(CFS)				
+ 67.	12.17		9.	2.	2.	2.
		(INCHES)	1.376	1.412	1.412	1.412
		(AC-FT)	4.	4.	4.	4.

CUMULATIVE AREA = .06 SQ MI

*** ***

50 KK — RRHV3

ROUTE FLOW FROM COMPUTATION POINT CPHV1 TO COMPUTATION POINT CPHV2(1ST REACH)

HYDROGRAPH ROUTING DATA

52 RS STORAGE ROUTING
NSTPS 1 NUMBER OF SUBREACHES
ITYP ELEV TYPE OF INITIAL CONDITION
RSVRIC 1137.00 INITIAL CONDITION
X .00 WORKING R AND D COEFFICIENT

53 RC NORMAL DEPTH CHANNEL
ANL .035 LEFT OVERBANK N-VALUE
ANCH .040 MAIN CHANNEL N-VALUE
ANR .035 RIGHT OVERBANK N-VALUE
RLNTH 400. REACH LENGTH
SEL .0100 ENERGY SLOPE
ELMAX 1140.0 MAX. ELEV. FOR STORAGE/OUTFLOW CALCULATION

CROSS-SECTION DATA

		--- LEFT OVERBANK ---			+ ------ MAIN CHANNEL -------			+ --- RIGHT OVERBANK ---	
55 RY	ELEVATION	1141.00	1140.00	1138.00	1137.00	1137.00	1138.00	1139.00	1140.00
54 RX	DISTANCE	.00	30.00	40.00	60.00	70.00	110.00	150.00	180.00

***

COMPUTED STORAGE-OUTFLOW-ELEVATION DATA

STORAGE	.00	.02	.06	.11	.17	.24	.33	.44	.55	.67
OUTFLOW	.00	2.10	8.15	19.06	35.80	59.26	90.31	135.96	194.36	263.15
ELEVATION	1137.00	1137.16	1137.32	1137.47	1137.63	1137.79	1137.95	1138.10	1138.26	1138.42
STORAGE	.81	.95	1.11	1.27	1.45	1.63	1.82	2.01	2.22	2.43
OUTFLOW	342.92	434.20	537.52	653.83	783.80	926.68	1082.75	1252.27	1435.54	1632.85
ELEVATION	1138.58	1138.74	1138.89	1139.05	1139.21	1139.37	1139.53	1139.68	1139.84	1140.00

*** WARNING *** MODIFIED PULS ROUTING MAY BE NUMERICALLY UNSTABLE FOR OUTFLOWS BETWEEN 36. TO 1633.
THE ROUTED HYDROGRAPH SHOULD BE EXAMINED FOR OSCILLATIONS OR OUTFLOWS GREATER THAN PEAK INFLOWS.
THIS CAN BE CORRECTED BY DECREASING THE TIME INTERVAL OR INCREASING STORAGE (USE A LONGER REACH.)

*** *** *** *** ***

HYDROGRAPH AT STATION RRHV3

PEAK FLOW	TIME		MAXIMUM AVERAGE FLOW			
			6-HR	24-HR	72-HR	24.92-HR
+ (CFS)	(HR)					
		(CFS)				
+ 66.	12.17		9.	2.	2.	2.
		(INCHES)	1.376	1.412	1.412	1.412
		(AC-FT)	4.	4.	4.	4.
PEAK STORAGE	TIME		MAXIMUM AVERAGE STORAGE			
			6-HR	24-HR	72-HR	24.92-HR
+ (AC-FT)	(HR)					
0.	12.17		0.	0.	0.	0.
PEAK STAGE	TIME		MAXIMUM AVERAGE STAGE			
			6-HR	24-HR	72-HR	24.92-HR
+ (FEET)	(HR)					
1137.82	12.17		1137.18	1137.05	1137.05	1137.05

CUMULATIVE AREA = .06 SQ MI

*** ***

56 KK — RRHV4

ROUTE FLOW FROM COMPUTATION POINT CPHV1 TO COMPUTATION POINT CPHV2(2ND REACH)

HYDROGRAPH ROUTING DATA

58 RS STORAGE ROUTING
NSTPS 1 NUMBER OF SUBREACHES
ITYP ELEV TYPE OF INITIAL CONDITION
RSVRIC 1141.00 INITIAL CONDITION
X .00 WORKING R AND D COEFFICIENT

59 RC NORMAL DEPTH CHANNEL
ANL .035 LEFT OVERBANK N-VALUE
ANCH .040 MAIN CHANNEL N-VALUE
ANR .035 RIGHT OVERBANK N-VALUE
RLNTH 400. REACH LENGTH
SEL .0100 ENERGY SLOPE
ELMAX 1146.0 MAX. ELEV. FOR STORAGE/OUTFLOW CALCULATION

CROSS-SECTION DATA

		--- LEFT OVERBANK ---			+ ------ MAIN CHANNEL -------			+ --- RIGHT OVERBANK ---	
61 RY	ELEVATION	1146.00	1144.00	1142.00	1141.00	1141.00	1142.00	1144.00	1146.00
60 RX	DISTANCE	.00	50.00	100.00	130.00	150.00	170.00	220.00	290.00

***

COMPUTED STORAGE-OUTFLOW-ELEVATION DATA

STORAGE	.00	.06	.16	.29	.45	.64	.86	1.12	1.40	1.72
OUTFLOW	.00	9.23	33.91	76.28	142.36	246.09	379.65	546.29	748.89	990.19
ELEVATION	1141.00	1141.26	1141.53	1141.79	1142.05	1142.32	1142.58	1142.84	1143.11	1143.37
STORAGE	2.07	2.46	2.87	3.32	3.81	4.34	4.91	5.52	6.16	6.84
OUTFLOW	1272.80	1599.25	1967.95	2384.76	2855.75	3383.80	3971.76	4622.41	5338.49	6122.91
ELEVATION	1143.63	1143.90	1144.16	1144.42	1144.68	1144.95	1145.21	1145.47	1145.74	1146.00

*** WARNING *** MODIFIED PULS ROUTING MAY BE NUMERICALLY UNSTABLE FOR OUTFLOWS BETWEEN 34. TO 6123.
THE ROUTED HYDROGRAPH SHOULD BE EXAMINED FOR OSCILLATIONS OR OUTFLOWS GREATER THAN PEAK INFLOWS.
THIS CAN BE CORRECTED BY DECREASING THE TIME INTERVAL OR INCREASING STORAGE (USE A LONGER REACH.)

*** *** *** *** ***

HYDROGRAPH AT STATION RRHV4

PEAK FLOW	TIME		MAXIMUM AVERAGE FLOW			
			6-HR	24-HR	72-HR	24.92-HR
+ (CFS)	(HR)					
		(CFS)				
+ 65.	12.25		9.	2.	2.	2.
		(INCHES)	1.376	1.412	1.412	1.412
		(AC-FT)	4.	4.	4.	4.
PEAK STORAGE	TIME		MAXIMUM AVERAGE STORAGE			
			6-HR	24-HR	72-HR	24.92-HR
+ (AC-FT)	(HR)					
0.	12.25		0.	0.	0.	0.
PEAK STAGE	TIME		MAXIMUM AVERAGE STAGE			
			6-HR	24-HR	72-HR	24.92-HR
+ (FEET)	(HR)					
1141.72	12.25		1141.14	1141.03	1141.03	1141.03

```
                          CUMULATIVE AREA =       .06 SQ MI

*** *** *** *** *** *** *** *** *** *** *** *** *** *** *** *** *** *** *** *** *** *** *** *** *** *** *** *** *** *** *** *** *** ***

                    **************
                    *            *
  62 KK             *    WC18B   *
                    *            *
                    **************
                               SUB-BASIN WC18B -LAND USE - NATURAL DESERT HILLSLOPES,MINOR DEVELOPMENT
                               24-HOUR TYPE II RAINFALL WAS USED TO FIND TC & R FOR THIS BASIN
                               THIS BASIN USED RAINFALL REDUCTION FACTOR OF .97

                     SUBBASIN RUNOFF DATA

  66 BA               SUBBASIN CHARACTERISTICS
                            TAREA          .06  SUBBASIN AREA

                      PRECIPITATION DATA

  16 PB                     STORM         4.07  BASIN TOTAL PRECIPITATION

  16 PI                 INCREMENTAL PRECIPITATION PATTERN
                            .00       .00       .00       .00       .00       .00       .00       .00       .00       .00
                            .00       .00       .00       .00       .00       .00       .00       .00       .00       .00
                            .00       .00       .00       .00       .00       .00       .00       .00       .00       .00
                            .00       .00       .00       .00       .00       .00       .00       .00       .00       .00
                            .00       .00       .00       .00       .00       .00       .00       .00       .00       .00
                            .00       .00       .00       .00       .00       .00       .00       .00       .00       .00
                            .00       .00       .00       .00       .00       .00       .00       .00       .00       .00
                            .00       .00       .00       .00       .00       .00       .00       .00       .00       .00
                            .00       .00       .00       .00       .00       .00       .00       .00       .00       .00
                            .00       .00       .00       .00       .00       .00       .00       .00       .00       .00
                            .00       .00       .00       .00       .00       .00       .00       .00       .00       .00
                            .00       .00       .00       .00       .00       .00       .00       .00       .00       .00
                            .00       .00       .00       .00       .00       .00       .01       .01       .01       .01
                            .01       .01       .01       .01       .01       .01       .01       .01       .06       .06
                            .06       .06       .06       .06       .01       .01       .01       .01       .01       .01
                            .01       .01       .01       .01       .01       .01       .00       .00       .00       .00
                            .00       .00       .00       .00       .00       .00       .00       .00       .00       .00
                            .00       .00       .00       .00       .00       .00       .00       .00       .00       .00
                            .00       .00       .00       .00       .00       .00       .00       .00       .00       .00
                            .00       .00       .00       .00       .00       .00       .00       .00       .00       .00
                            .00       .00       .00       .00       .00       .00       .00       .00       .00       .00
                            .00       .00       .00       .00       .00       .00       .00       .00       .00       .00
                            .00       .00       .00       .00       .00       .00       .00       .00       .00       .00
                            .00       .00       .00       .00       .00       .00       .00       .00       .00       .00
                            .00       .00       .00       .00       .00       .00       .00       .00       .00       .00
                            .00       .00       .00       .00       .00       .00       .00       .00       .00       .00
                            .00       .00       .00       .00       .00       .00       .00       .00       .00       .00
                            .00       .00       .00       .00       .00       .00       .00       .00       .00       .00
                            .00       .00       .00       .00       .00       .00       .00       .00

  67 LG               GREEN AND AMPT LOSS RATE
                            STRTL          .15  STARTING LOSS
                              DTH          .26  MOISTURE DEFICIT
                             PSIF         4.10  WETTING FRONT SUCTION
                            XKSAT          .24  HYDRAULIC CONDUCTIVITY
                            RTIMP          .00  PERCENT IMPERVIOUS AREA

  68 UC               CLARK UNITGRAPH
                               TC          .30  TIME OF CONCENTRATION
                                R          .34  STORAGE COEFFICIENT

  69 UA               ACCUMULATED-AREA VS. TIME,  11 ORDINATES
                             .0       3.0       5.0       8.0      12.0      20.0      43.0      75.0      90.0      96.0
                          100.0

                                                                  ***

                                                         UNIT HYDROGRAPH PARAMETERS
                                                    CLARK   TC=   .30 HR,        R=   .34 HR
                                                   SNYDER   TP=   .30 HR,       CP=   .63

                                                              UNIT HYDROGRAPH
                                                         24 END-OF-PERIOD ORDINATES
                         4.       20.       58.       80.       66.       52.       40.       32.       25.       19.
                        15.       12.        9.        7.        6.        4.        3.        3.        2.        2.
                         1.        1.        1.        1.

            ***             ***             ***             ***             ***

                                HYDROGRAPH AT STATION     WC18B

         TOTAL RAINFALL =     4.07, TOTAL LOSS =     2.68, TOTAL EXCESS =     1.40

      PEAK FLOW      TIME                         MAXIMUM AVERAGE FLOW
                                           6-HR        24-HR        72-HR      24.92-HR
  +    (CFS)         (HR)
                                  (CFS)
  +       72.        12.17                  9.           2.           2.           2.
```



```
                                (INCHES)       1.389         1.389         1.389         1.389
                                 (AC-FT)          4.            4.            4.            4.

                               CUMULATIVE AREA =       .06 SQ MI

*** *** *** *** *** *** *** *** *** *** *** *** *** *** *** *** *** *** *** *** *** *** *** *** *** *** *** *** *** *** *** *** *** ***

                    **************
                    *            *
  71 KK             *    RRHV5   *
                    *            *
                    **************
                               ROUTE FLOW FROM SUB-BASIN WC18B TO COMPUTATION POINT CPHV2

                     HYDROGRAPH ROUTING DATA

  73 RS                 STORAGE ROUTING
                            NSTPS            1  NUMBER OF SUBREACHES
                             ITYP         ELEV  TYPE OF INITIAL CONDITION
                           RSVRIC      1136.00  INITIAL CONDITION
                                X          .00  WORKING R AND D COEFFICIENT

  74 RC                 NORMAL DEPTH CHANNEL
                              ANL         .035  LEFT OVERBANK N-VALUE
                             ANCH         .040  MAIN CHANNEL N-VALUE
                              ANR         .035  RIGHT OVERBANK N-VALUE
                            RLNTH         650.  REACH LENGTH
                              SEL        .0170  ENERGY SLOPE
                            ELMAX       1140.0  MAX. ELEV. FOR STORAGE/OUTFLOW CALCULATION

                                               CROSS-SECTION DATA
                                   --- LEFT OVERBANK --- + ------ MAIN CHANNEL ------- + --- RIGHT OVERBANK ---
  76 RY             ELEVATION  1140.00   1139.00   1138.00   1136.00   1136.00   1138.00   1139.00   1140.00
  75 RX              DISTANCE      .00     60.00    120.00    140.00    160.00    190.00    220.00    240.00

                                                                  ***

                                         COMPUTED STORAGE-OUTFLOW-ELEVATION DATA

                 STORAGE       .00       .07       .16       .26       .38       .52       .67       .85      1.03      1.24
                 OUTFLOW       .00      7.61     25.57     53.31     91.31    140.26    200.90    274.00    360.33    460.63
               ELEVATION   1136.00   1136.21   1136.42   1136.63   1136.84   1137.05   1137.26   1137.47   1137.68   1137.90

                 STORAGE      1.46      1.74      2.08      2.48      2.94      3.45      4.02      4.64      5.32      6.05
                 OUTFLOW    589.05    751.81    943.13   1168.34   1432.05   1740.06   2094.10   2496.55   2950.33   3458.55
               ELEVATION   1138.11   1138.32   1138.53   1138.74   1138.95   1139.16   1139.37   1139.58   1139.79   1140.00

*** WARNING *** MODIFIED PULS ROUTING MAY BE NUMERICALLY UNSTABLE FOR OUTFLOWS BETWEEN        53. TO      3459.
                THE ROUTED HYDROGRAPH SHOULD BE EXAMINED FOR OSCILLATIONS OR OUTFLOWS GREATER THAN PEAK INFLOWS.
                THIS CAN BE CORRECTED BY DECREASING THE TIME INTERVAL OR INCREASING STORAGE (USE A LONGER REACH.)

            ***             ***             ***             ***             ***

                                HYDROGRAPH AT STATION     RRHV5

      PEAK FLOW      TIME                         MAXIMUM AVERAGE FLOW
                                           6-HR        24-HR        72-HR      24.92-HR
  +    (CFS)         (HR)
                                  (CFS)
  +       71.        12.17                  9.           2.           2.           2.
                                (INCHES)   1.389        1.389        1.389        1.389
                                 (AC-FT)      4.           4.           4.           4.

    PEAK STORAGE     TIME                        MAXIMUM AVERAGE STORAGE
                                           6-HR        24-HR        72-HR      24.92-HR
  +   (AC-FT)        (HR)
           0.        12.17                  0.           0.           0.           0.

     PEAK STAGE      TIME                         MAXIMUM AVERAGE STAGE
                                           6-HR        24-HR        72-HR      24.92-HR
  +    (FEET)        (HR)
      1136.73        12.17             1136.13      1136.03      1136.03      1136.03

                               CUMULATIVE AREA =       .06 SQ MI

*** *** *** *** *** *** *** *** *** *** *** *** *** *** *** *** *** *** *** *** *** *** *** *** *** *** *** *** *** *** *** *** *** ***

                    **************
                    *            *
  77 KK             *    WC19B   *
                    *            *
                    **************
                               SUB-BASIN WC19B -LAND USE - DESERT MOUNTAIN,DESERT HILLS;MINOR DEVELOPMENT
                               24-HOUR TYPE II RAINFALL WAS USED TO FIND TC & R FOR THIS BASIN
                               THIS BASIN USED RAINFALL REDUCTION FACTOR OF .97

                     SUBBASIN RUNOFF DATA
```

81 BA SUBBASIN CHARACTERISTICS
TAREA .21 SUBBASIN AREA

PRECIPITATION DATA

16 PB STORM 4.07 BASIN TOTAL PRECIPITATION

16 PI INCREMENTAL PRECIPITATION PATTERN

.00	.00	.00	.00	.00	.00	.00	.00	.00	.00
.00	.00	.00	.00	.00	.00	.00	.00	.00	.00
.00	.00	.00	.00	.00	.00	.00	.00	.00	.00
.00	.00	.00	.00	.00	.00	.00	.00	.00	.00
.00	.00	.00	.00	.00	.00	.00	.00	.00	.00
.00	.00	.00	.00	.00	.00	.00	.00	.00	.00
.00	.00	.00	.00	.00	.00	.00	.00	.00	.00
.00	.00	.00	.00	.00	.00	.00	.00	.00	.00
.00	.00	.00	.00	.00	.00	.00	.00	.00	.00
.00	.00	.00	.00	.00	.00	.00	.00	.00	.00
.00	.00	.00	.00	.00	.00	.00	.00	.00	.00
.00	.00	.00	.00	.00	.00	.00	.00	.00	.00
.00	.00	.00	.00	.00	.00	.01	.01	.01	.01
.01	.01	.01	.01	.01	.01	.01	.01	.06	.06
.06	.06	.06	.06	.01	.01	.01	.01	.01	.01
.01	.01	.01	.01	.01	.01	.00	.00	.00	.00
.00	.00	.00	.00	.00	.00	.00	.00	.00	.00
.00	.00	.00	.00	.00	.00	.00	.00	.00	.00
.00	.00	.00	.00	.00	.00	.00	.00	.00	.00
.00	.00	.00	.00	.00	.00	.00	.00	.00	.00
.00	.00	.00	.00	.00	.00	.00	.00	.00	.00
.00	.00	.00	.00	.00	.00	.00	.00	.00	.00
.00	.00	.00	.00	.00	.00	.00	.00	.00	.00
.00	.00	.00	.00	.00	.00	.00	.00	.00	.00
.00	.00	.00	.00	.00	.00	.00	.00	.00	.00
.00	.00	.00	.00	.00	.00	.00	.00	.00	.00
.00	.00	.00	.00	.00	.00	.00	.00	.00	.00
.00	.00	.00	.00	.00	.00	.00	.00	.00	.00
.00	.00	.00	.00	.00	.00	.00	.00		

82 LG GREEN AND AMPT LOSS RATE
STRTL .15 STARTING LOSS
DTH .28 MOISTURE DEFICIT
PSIF 3.52 WETTING FRONT SUCTION
XKSAT .26 HYDRAULIC CONDUCTIVITY
RTIMP 40.00 PERCENT IMPERVIOUS AREA

83 UC CLARK UNITGRAPH
TC .22 TIME OF CONCENTRATION
R .16 STORAGE COEFFICIENT

84 UA ACCUMULATED-AREA VS. TIME, 11 ORDINATES

.0	3.0	5.0	8.0	12.0	20.0	43.0	75.0	90.0	96.0
100.0									

***

UNIT HYDROGRAPH PARAMETERS
CLARK TC= .22 HR, R= .16 HR
SNYDER TP= .20 HR, CP= .75

UNIT HYDROGRAPH
12 END-OF-PERIOD ORDINATES

38.	306.	476.	330.	195.	115.	68.	40.	24.	14.
8.	5.								

*** *** *** *** ***

HYDROGRAPH AT STATION WC19B

TOTAL RAINFALL = 4.07, TOTAL LOSS = 1.62, TOTAL EXCESS = 2.45

PEAK FLOW	TIME		MAXIMUM AVERAGE FLOW			
			6-HR	24-HR	72-HR	24.92-HR
+ (CFS)	(HR)					
		(CFS)				
+ 350.	12.08		44.	14.	13.	13.
		(INCHES)	1.963	2.437	2.439	2.439
		(AC-FT)	22.	27.	27.	27.

CUMULATIVE AREA = .21 SQ MI

*** ***

****
86 KK * RRHV6 *
****

ROUTE FLOW FROM SUB-BASIN WC19B TO COMPUTATION POINT CPHV2

HYDROGRAPH ROUTING DATA

88 RS STORAGE ROUTING
NSTPS 1 NUMBER OF SUBREACHES
ITYP ELEV TYPE OF INITIAL CONDITION
RSVRIC 1137.00 INITIAL CONDITION
X .00 WORKING R AND D COEFFICIENT

89 RC NORMAL DEPTH CHANNEL
ANL .035 LEFT OVERBANK N-VALUE
ANCH .040 MAIN CHANNEL N-VALUE
ANR .035 RIGHT OVERBANK N-VALUE
RLNTH 640. REACH LENGTH
SEL .0180 ENERGY SLOPE
ELMAX 1139.0 MAX. ELEV. FOR STORAGE/OUTFLOW CALCULATION

CROSS-SECTION DATA

		--- LEFT OVERBANK --- +		------ MAIN CHANNEL ------- +			--- RIGHT OVERBANK ---	
91 RY ELEVATION	1139.00	1138.50	1138.00	1137.00	1137.00	1138.00	1139.00	1140.00
90 RX DISTANCE	.00	10.00	30.00	45.00	60.00	75.00	110.00	140.00

***

COMPUTED STORAGE-OUTFLOW-ELEVATION DATA

STORAGE	.00	.03	.06	.09	.13	.18	.23	.28	.34	.41
OUTFLOW	.00	1.83	6.07	12.50	21.17	32.17	45.65	61.73	80.55	102.25
ELEVATION	1137.00	1137.11	1137.21	1137.32	1137.42	1137.53	1137.63	1137.74	1137.84	1137.95
STORAGE	.48	.56	.65	.76	.88	1.01	1.15	1.29	1.45	1.61
OUTFLOW	129.67	163.73	202.67	247.15	297.76	355.59	420.44	492.37	571.62	658.44
ELEVATION	1138.05	1138.16	1138.26	1138.37	1138.47	1138.58	1138.68	1138.79	1138.89	1139.00

*** WARNING *** MODIFIED PULS ROUTING MAY BE NUMERICALLY UNSTABLE FOR OUTFLOWS BETWEEN 46. TO 658.
THE ROUTED HYDROGRAPH SHOULD BE EXAMINED FOR OSCILLATIONS OR OUTFLOWS GREATER THAN PEAK INFLOWS.
THIS CAN BE CORRECTED BY DECREASING THE TIME INTERVAL OR INCREASING STORAGE (USE A LONGER REACH.)

*** *** *** *** ***

HYDROGRAPH AT STATION RRHV6

PEAK FLOW	TIME		MAXIMUM AVERAGE FLOW			
			6-HR	24-HR	72-HR	24.92-HR
+ (CFS)	(HR)					
		(CFS)				
+ 349.	12.08		44.	14.	13.	13.
		(INCHES)	1.963	2.437	2.439	2.439
		(AC-FT)	22.	27.	27.	27.

PEAK STORAGE	TIME	MAXIMUM AVERAGE STORAGE			
		6-HR	24-HR	72-HR	24.92-HR
+ (AC-FT)	(HR)				
1.	12.08	0.	0.	0.	0.

PEAK STAGE	TIME	MAXIMUM AVERAGE STAGE			
		6-HR	24-HR	72-HR	24.92-HR
+ (FEET)	(HR)				
1138.57	12.08	1137.45	1137.22	1137.22	1137.22

CUMULATIVE AREA = .21 SQ MI

*** ***

****
92 KK * PM3B *
****

SUB-BASIN PM3B -LAND USE - NATURAL DESERT HILLSLOPES,MINOR DEVELOPMENT
24-HOUR TYPE II RAINFALL WAS USED TO FIND TC & R FOR THIS BASIN
THIS BASIN USED RAINFALL REDUCTION FACTOR OF .97

SUBBASIN RUNOFF DATA

96 BA SUBBASIN CHARACTERISTICS
TAREA .06 SUBBASIN AREA

PRECIPITATION DATA

16 PB STORM 4.07 BASIN TOTAL PRECIPITATION

16 PI INCREMENTAL PRECIPITATION PATTERN

.00	.00	.00	.00	.00	.00	.00	.00	.00	.00
.00	.00	.00	.00	.00	.00	.00	.00	.00	.00
.00	.00	.00	.00	.00	.00	.00	.00	.00	.00
.00	.00	.00	.00	.00	.00	.00	.00	.00	.00
.00	.00	.00	.00	.00	.00	.00	.00	.00	.00
.00	.00	.00	.00	.00	.00	.00	.00	.00	.00
.00	.00	.00	.00	.00	.00	.00	.00	.00	.00
.00	.00	.00	.00	.00	.00	.00	.00	.00	.00
.00	.00	.00	.00	.00	.00	.00	.00	.00	.00
.00	.00	.00	.00	.00	.00	.00	.00	.00	.00
.00	.00	.00	.00	.00	.00	.00	.00	.00	.00

```
              .00     .00     .00     .00     .00     .00     .00     .00     .00     .00
              .00     .00     .00     .00     .00     .00     .01     .01     .01     .01
              .01     .01     .01     .01     .01     .01     .01     .01     .06     .06
              .06     .06     .06     .06     .01     .01     .01     .01     .01     .01
              .01     .01     .01     .01     .01     .01     .00     .00     .00     .00
              .00     .00     .00     .00     .00     .00     .00     .00     .00     .00
              .00     .00     .00     .00     .00     .00     .00     .00     .00     .00
              .00     .00     .00     .00     .00     .00     .00     .00     .00     .00
              .00     .00     .00     .00     .00     .00     .00     .00     .00     .00
              .00     .00     .00     .00     .00     .00     .00     .00     .00     .00
              .00     .00     .00     .00     .00     .00     .00     .00     .00     .00
              .00     .00     .00     .00     .00     .00     .00     .00     .00     .00
              .00     .00     .00     .00     .00     .00     .00     .00     .00     .00
              .00     .00     .00     .00     .00     .00     .00     .00     .00     .00
              .00     .00     .00     .00     .00     .00     .00     .00     .00     .00
              .00     .00     .00     .00     .00     .00     .00     .00     .00     .00
              .00     .00     .00     .00     .00     .00     .00     .00     .00     .00
              .00     .00     .00     .00     .00     .00     .00     .00

 97 LG         GREEN AND AMPT LOSS RATE
                    STRTL        .15  STARTING LOSS
                      DTH        .34  MOISTURE DEFICIT
                     PSIF       3.10  WETTING FRONT SUCTION
                    XKSAT        .95  HYDRAULIC CONDUCTIVITY
                    RTIMP       5.00  PERCENT IMPERVIOUS AREA

 98 UC         CLARK UNITGRAPH
                       TC        .28  TIME OF CONCENTRATION
                        R        .27  STORAGE COEFFICIENT

 99 UA         ACCUMULATED-AREA VS. TIME,  11 ORDINATES
                    .0       3.0       5.0       8.0      12.0      20.0      43.0      75.0      90.0      96.0
                 100.0

                                                 ***

                                        UNIT HYDROGRAPH PARAMETERS
                                    CLARK   TC=    .28 HR,        R=   .27 HR
                                   SNYDER   TP=    .28 HR,       CP=   .67

                                           UNIT HYDROGRAPH
                                        20 END-OF-PERIOD ORDINATES
            5.        28.        75.        91.        70.        52.        38.        28.        21.        15.
           11.         8.         6.         4.         3.         2.         2.         1.         1.         1.

      ***          ***          ***          ***          ***

                          HYDROGRAPH AT STATION      PM3B

   TOTAL RAINFALL =    4.07, TOTAL LOSS =     3.19, TOTAL EXCESS =      .88

 PEAK FLOW      TIME                          MAXIMUM AVERAGE FLOW
                                      6-HR        24-HR        72-HR      24.92-HR
+   (CFS)       (HR)
                             (CFS)
+      46.     12.17                    5.           1.           1.           1.
                          (INCHES)    .818         .877         .877         .877
                           (AC-FT)      3.           3.           3.           3.

                          CUMULATIVE AREA =      .06 SQ MI


*** *** *** *** *** *** *** *** *** *** *** *** *** *** *** *** *** *** *** *** *** *** *** *** *** *** *** *** *** *** *** *** ***

               **************
               *            *
 101 KK        *    CPHV2   *
               *            *
               **************
                          COMBINE ROUTED FLOW FROM CPHV1, WC18B, WC19B WITH RUNOFF FROM SUB-BASIN PM3B

 103 HC        HYDROGRAPH COMBINATION
                    ICOMP              4  NUMBER OF HYDROGRAPHS TO COMBINE
                                                 ***

      ***          ***          ***          ***          ***

                          HYDROGRAPH AT STATION     CPHV2

 PEAK FLOW      TIME                          MAXIMUM AVERAGE FLOW
                                      6-HR        24-HR        72-HR      24.92-HR
+   (CFS)       (HR)
                             (CFS)
+     516.     12.08                   67.          20.          19.          19.
                          (INCHES)   1.609        1.880        1.882        1.882
                           (AC-FT)     33.          39.          39.          39.

                          CUMULATIVE AREA =      .39 SQ MI
```



```
*** *** *** *** *** *** *** *** *** *** *** *** *** *** *** *** *** *** *** *** *** *** *** *** *** *** *** *** *** *** *** *** ***

               **************
               *            *
 104 KK        *    RRHV7   *
               *            *
               **************
                          ROUTE FLOW FROM COMPUTATION CPHV2 TO COMPUTATION POINT CPHV3

                HYDROGRAPH ROUTING DATA

 106 RS           STORAGE ROUTING
                      NSTPS           1  NUMBER OF SUBREACHES
                       ITYP        ELEV  TYPE OF INITIAL CONDITION
                     RSVRIC     1126.00  INITIAL CONDITION
                          X         .00 WORKING R AND D COEFFICIENT

 107 RC           NORMAL DEPTH CHANNEL
                        ANL        .035  LEFT OVERBANK N-VALUE
                       ANCH        .040  MAIN CHANNEL N-VALUE
                        ANR        .035  RIGHT OVERBANK N-VALUE
                      RLNTH        750.  REACH LENGTH
                        SEL       .0110  ENERGY SLOPE
                      ELMAX      1130.0  MAX. ELEV. FOR STORAGE/OUTFLOW CALCULATION

                                         CROSS-SECTION DATA
                        --- LEFT OVERBANK --- + ------ MAIN CHANNEL ------- + --- RIGHT OVERBANK ---
 109 RY         ELEVATION  1130.00   1129.00   1128.00   1126.00   1126.00   1128.00   1132.00   1133.00
 108 RX          DISTANCE      .00     40.00     90.00    160.00    190.00    210.00    250.00    390.00

                                                 ***

                                     COMPUTED STORAGE-OUTFLOW-ELEVATION DATA

              STORAGE       .00       .13       .29       .48       .71       .97      1.27      1.60      1.97      2.37
              OUTFLOW       .00      9.29     31.60     66.68    115.44    179.03    258.60    355.35    470.42    604.94
            ELEVATION   1126.00   1126.21   1126.42   1126.63   1126.84   1127.05   1127.26   1127.47   1127.68   1127.90

              STORAGE      2.81      3.29      3.81      4.39      5.01      5.67      6.37      7.11      7.88      8.70
              OUTFLOW    778.20    993.56   1236.45   1509.22   1813.90   2153.64   2528.40   2938.84   3386.12   3871.49
            ELEVATION   1128.11   1128.32   1128.53   1128.74   1128.95   1129.16   1129.37   1129.58   1129.79   1130.00

*** WARNING *** MODIFIED PULS ROUTING MAY BE NUMERICALLY UNSTABLE FOR OUTFLOWS BETWEEN      259. TO      3871.
                THE ROUTED HYDROGRAPH SHOULD BE EXAMINED FOR OSCILLATIONS OR OUTFLOWS GREATER THAN PEAK INFLOWS.
                THIS CAN BE CORRECTED BY DECREASING THE TIME INTERVAL OR INCREASING STORAGE (USE A LONGER REACH.)

      ***          ***          ***          ***          ***

                          HYDROGRAPH AT STATION     RRHV7

 PEAK FLOW      TIME                          MAXIMUM AVERAGE FLOW
                                      6-HR        24-HR        72-HR      24.92-HR
+   (CFS)       (HR)
                             (CFS)
+     508.     12.17                   67.          20.          19.          19.
                          (INCHES)   1.609        1.880        1.881        1.881
                           (AC-FT)     33.          39.          39.          39.

PEAK STORAGE    TIME                        MAXIMUM AVERAGE STORAGE
                                      6-HR        24-HR        72-HR      24.92-HR
+ (AC-FT)       (HR)
        2.     12.17                    0.           0.           0.           0.

 PEAK STAGE     TIME                         MAXIMUM AVERAGE STAGE
                                      6-HR        24-HR        72-HR      24.92-HR
+  (FEET)       (HR)
   1127.74     12.17               1126.45      1126.18      1126.17      1126.17

                          CUMULATIVE AREA =      .39 SQ MI


*** *** *** *** *** *** *** *** *** *** *** *** *** *** *** *** *** *** *** *** *** *** *** *** *** *** *** *** *** *** *** *** ***

               **************
               *            *
 110 KK        *    WC20B   *
               *            *
               **************
                          SUB-BASIN WC20B -LAND USE - NATURAL DESERT HILLSLOPES,MINOR DEVELOPMENT
                          24-HOUR TYPE II RAINFALL WAS USED TO FIND TC & R FOR THIS BASIN
                          THIS BASIN USED RAINFALL REDUCTION FACTOR OF .97

                SUBBASIN RUNOFF DATA

 114 BA           SUBBASIN CHARACTERISTICS
                      TAREA        .01  SUBBASIN AREA

                  PRECIPITATION DATA

 16 PB                 STORM       4.07  BASIN TOTAL PRECIPITATION
```

```
 16 PI          INCREMENTAL PRECIPITATION PATTERN
                    .00     .00     .00     .00     .00     .00     .00     .00     .00     .00
                    .00     .00     .00     .00     .00     .00     .00     .00     .00     .00
                    .00     .00     .00     .00     .00     .00     .00     .00     .00     .00
                    .00     .00     .00     .00     .00     .00     .00     .00     .00     .00
                    .00     .00     .00     .00     .00     .00     .00     .00     .00     .00
                    .00     .00     .00     .00     .00     .00     .00     .00     .00     .00
                    .00     .00     .00     .00     .00     .00     .00     .00     .00     .00
                    .00     .00     .00     .00     .00     .00     .00     .00     .00     .00
                    .00     .00     .00     .00     .00     .00     .00     .00     .00     .00
                    .00     .00     .00     .00     .00     .00     .00     .00     .00     .00
                    .00     .00     .00     .00     .00     .00     .00     .00     .00     .00
                    .00     .00     .00     .00     .00     .00     .00     .00     .00     .00
                    .00     .00     .00     .00     .00     .00     .01     .01     .01     .01
                    .01     .01     .01     .01     .01     .01     .01     .01     .06     .06
                    .06     .06     .06     .06     .01     .01     .01     .01     .01     .01
                    .01     .01     .01     .01     .01     .01     .00     .00     .00     .00
                    .00     .00     .00     .00     .00     .00     .00     .00     .00     .00
                    .00     .00     .00     .00     .00     .00     .00     .00     .00     .00
                    .00     .00     .00     .00     .00     .00     .00     .00     .00     .00
                    .00     .00     .00     .00     .00     .00     .00     .00     .00     .00
                    .00     .00     .00     .00     .00     .00     .00     .00     .00     .00
                    .00     .00     .00     .00     .00     .00     .00     .00     .00     .00
                    .00     .00     .00     .00     .00     .00     .00     .00     .00     .00
                    .00     .00     .00     .00     .00     .00     .00     .00     .00     .00
                    .00     .00     .00     .00     .00     .00     .00     .00     .00     .00
                    .00     .00     .00     .00     .00     .00     .00     .00     .00     .00
                    .00     .00     .00     .00     .00     .00     .00     .00     .00     .00
                    .00     .00     .00     .00     .00     .00     .00     .00     .00     .00
                    .00     .00     .00     .00     .00     .00     .00     .00

115 LG          GREEN AND AMPT LOSS RATE
                      STRTL          .15  STARTING LOSS
                        DTH          .25  MOISTURE DEFICIT
                       PSIF         8.60  WETTING FRONT SUCTION
                      XKSAT          .07  HYDRAULIC CONDUCTIVITY
                      RTIMP          .00  PERCENT IMPERVIOUS AREA

116 UC          CLARK UNITGRAPH
                         TC          .23  TIME OF CONCENTRATION
                          R          .26  STORAGE COEFFICIENT

117 UA          ACCUMULATED-AREA VS. TIME,  11 ORDINATES
                   .0      3.0      5.0      8.0     12.0     20.0     43.0     75.0     90.0     96.0
                100.0

                                           ***

                                 UNIT HYDROGRAPH PARAMETERS
                              CLARK   TC=   .23 HR,        R=   .26 HR
                             SNYDER   TP=   .23 HR,       CP=   .60

                                     UNIT HYDROGRAPH
                                 19 END-OF-PERIOD ORDINATES
                  2.      13.      23.      20.      14.      10.       7.       5.       4.       3.
                  2.       1.       1.       1.       1.       0.       0.       0.       0.

      ***            ***            ***            ***            ***

                         HYDROGRAPH AT STATION     WC20B

   TOTAL RAINFALL =    4.07, TOTAL LOSS =    2.28, TOTAL EXCESS =    1.80

  PEAK FLOW     TIME                              MAXIMUM AVERAGE FLOW
                                       6-HR        24-HR        72-HR     24.92-HR
 +   (CFS)      (HR)
                            (CFS)
 +      21.     12.08                    3.           1.           1.           1.
                          (INCHES)    1.790        1.790        1.790        1.790
                           (AC-FT)       1.           1.           1.           1.

                        CUMULATIVE AREA =    .01 SQ MI

*** *** *** *** *** *** *** *** *** *** *** *** *** *** *** *** *** *** *** *** *** *** *** *** *** *** *** *** *** *** *** *** ***

            **************
            *            *
119 KK      *   RRHV8    *
            *            *
            **************
                        ROUTE FLOW FROM SUB-BASIN WC20B TO COMPUTATION POINT CPHV3

               HYDROGRAPH ROUTING DATA

121 RS          STORAGE ROUTING
                      NSTPS            1  NUMBER OF SUBREACHES
                       ITYP         ELEV  TYPE OF INITIAL CONDITION
                     RSVRIC      1132.00  INITIAL CONDITION
                          X          .00 WORKING R AND D COEFFICIENT

122 RC          NORMAL DEPTH CHANNEL
                        ANL         .035  LEFT OVERBANK N-VALUE
```



```
                       ANCH         .035  MAIN CHANNEL N-VALUE
                        ANR         .035  RIGHT OVERBANK N-VALUE
                      RLNTH         850.  REACH LENGTH
                        SEL        .0220  ENERGY SLOPE
                      ELMAX       1134.5  MAX. ELEV. FOR STORAGE/OUTFLOW CALCULATION

                                      CROSS-SECTION DATA
                         --- LEFT OVERBANK --- + ------ MAIN CHANNEL ------- + --- RIGHT OVERBANK ---
 124 RY        ELEVATION  1134.50   1134.00   1133.00   1132.00   1132.00   1134.00   1134.00   1134.50
 123 RX         DISTANCE      .00     10.00     20.00     30.00     40.00     60.00    170.00    220.00

                                              ***

                                   COMPUTED STORAGE-OUTFLOW-ELEVATION DATA

            STORAGE       .00       .03       .06       .11       .16       .21       .28       .35       .42       .50
            OUTFLOW       .00      2.26      7.59     15.82     27.10     41.62     59.61     81.30    108.03    140.57
          ELEVATION   1132.00   1132.13   1132.26   1132.39   1132.53   1132.66   1132.79   1132.92   1133.05   1133.18

            STORAGE       .59       .69       .79       .90      1.02      1.15      1.51      1.98      2.48      3.03
            OUTFLOW    177.48    218.99    265.32    316.67    373.24    435.22    525.90    657.13    820.90   1016.06
          ELEVATION   1133.32   1133.45   1133.58   1133.71   1133.84   1133.97   1134.11   1134.24   1134.37   1134.50

 *** WARNING *** MODIFIED PULS ROUTING MAY BE NUMERICALLY UNSTABLE FOR OUTFLOWS BETWEEN       60. TO      1016.
                 THE ROUTED HYDROGRAPH SHOULD BE EXAMINED FOR OSCILLATIONS OR OUTFLOWS GREATER THAN PEAK INFLOWS.
                 THIS CAN BE CORRECTED BY DECREASING THE TIME INTERVAL OR INCREASING STORAGE (USE A LONGER REACH.)

      ***            ***            ***            ***            ***

                         HYDROGRAPH AT STATION     RRHV8

  PEAK FLOW     TIME                              MAXIMUM AVERAGE FLOW
                                       6-HR        24-HR        72-HR     24.92-HR
 +   (CFS)      (HR)
                            (CFS)
 +      21.     12.17                    3.           1.           1.           1.
                          (INCHES)    1.790        1.790        1.790        1.790
                           (AC-FT)       1.           1.           1.           1.

  PEAK STORAGE  TIME                            MAXIMUM AVERAGE STORAGE
                                       6-HR        24-HR        72-HR     24.92-HR
 +  (AC-FT)     (HR)
         0.     12.17                    0.           0.           0.           0.

  PEAK STAGE    TIME                             MAXIMUM AVERAGE STAGE
                                       6-HR        24-HR        72-HR     24.92-HR
 +   (FEET)     (HR)
    1132.45     12.17              1132.08      1132.02      1132.02      1132.02

                        CUMULATIVE AREA =    .01 SQ MI

*** *** *** *** *** *** *** *** *** *** *** *** *** *** *** *** *** *** *** *** *** *** *** *** *** *** *** *** *** *** *** *** ***

            **************
            *            *
125 KK      *   CPHV3    *
            *            *
            **************
                        COMBINE ROUTED FLOWS FROM SUB-BASIN WC20B AND  COMPUTATION POINT CPHV3

127 HC          HYDROGRAPH COMBINATION
                      ICOMP            2  NUMBER OF HYDROGRAPHS TO COMBINE

                                              ***

      ***            ***            ***            ***            ***

                         HYDROGRAPH AT STATION     CPHV3

  PEAK FLOW     TIME                              MAXIMUM AVERAGE FLOW
                                       6-HR        24-HR        72-HR     24.92-HR
 +   (CFS)      (HR)
                            (CFS)
 +     528.     12.17                   70.          20.          20.          20.
                          (INCHES)    1.615        1.877        1.878        1.878
                           (AC-FT)      35.          40.          40.          40.

                        CUMULATIVE AREA =    .40 SQ MI

*** *** *** *** *** *** *** *** *** *** *** *** *** *** *** *** *** *** *** *** *** *** *** *** *** *** *** *** *** *** *** *** ***

            **************
            *            *
128 KK      *   RRHV9    *
            *            *
            **************
                        ROUTE FLOW FROM COMPUTATION CPHV3 TO COMPUTATION POINT CPHV4
```

```
              HYDROGRAPH ROUTING DATA

 130 RS          STORAGE ROUTING
                      NSTPS          1  NUMBER OF SUBREACHES
                       ITYP       ELEV  TYPE OF INITIAL CONDITION
                     RSVRIC    1121.00  INITIAL CONDITION
                          X        .00 WORKING R AND D COEFFICIENT

 131 RC          NORMAL DEPTH CHANNEL
                        ANL       .035  LEFT OVERBANK N-VALUE
                       ANCH       .040  MAIN CHANNEL N-VALUE
                        ANR       .035  RIGHT OVERBANK N-VALUE
                      RLNTH       780.  REACH LENGTH
                        SEL      .0080  ENERGY SLOPE
                      ELMAX     1126.0  MAX. ELEV. FOR STORAGE/OUTFLOW CALCULATION

                                          CROSS-SECTION DATA
                            --- LEFT OVERBANK --- + ------ MAIN CHANNEL ------- + --- RIGHT OVERBANK ---
 133 RY         ELEVATION  1126.00   1124.00   1122.00   1121.00   1121.00   1122.00   1124.00   1126.00
 132 RX          DISTANCE      .00    100.00    130.00    150.00    165.00    180.00    290.00    350.00

                                                          ***

                                       COMPUTED STORAGE-OUTFLOW-ELEVATION DATA

           STORAGE       .00       .09       .23       .41       .63       .93      1.31      1.78      2.34      2.98
           OUTFLOW       .00      6.13     22.31     49.84     92.49    161.00    254.31    377.48    534.88    730.49
         ELEVATION   1121.00   1121.26   1121.53   1121.79   1122.05   1122.32   1122.58   1122.84   1123.11   1123.37

           STORAGE      3.71      4.53      5.44      6.44      7.54      8.75     10.05     11.45     12.95     14.55
           OUTFLOW    968.08   1251.19   1581.53   1969.77   2419.00   2931.29   3509.54   4156.90   4876.58   5672.07
         ELEVATION   1123.63   1123.90   1124.16   1124.42   1124.68   1124.95   1125.21   1125.47   1125.74   1126.00

*** WARNING *** MODIFIED PULS ROUTING MAY BE NUMERICALLY UNSTABLE FOR OUTFLOWS BETWEEN       535. TO      5672.
                THE ROUTED HYDROGRAPH SHOULD BE EXAMINED FOR OSCILLATIONS OR OUTFLOWS GREATER THAN PEAK INFLOWS.
                THIS CAN BE CORRECTED BY DECREASING THE TIME INTERVAL OR INCREASING STORAGE (USE A LONGER REACH.)

      ***           ***           ***           ***           ***

                      HYDROGRAPH AT STATION     RRHV9

 PEAK FLOW      TIME                          MAXIMUM AVERAGE FLOW
                                      6-HR       24-HR       72-HR     24.92-HR
+   (CFS)       (HR)
                          (CFS)
+      523.     12.17                   70.         20.         20.         20.
                       (INCHES)      1.615       1.876       1.878       1.878
                        (AC-FT)        35.         40.         40.         40.

 PEAK STORAGE   TIME                         MAXIMUM AVERAGE STORAGE
                                      6-HR       24-HR       72-HR     24.92-HR
+  (AC-FT)      (HR)
         2.     12.17                    0.          0.          0.          0.

 PEAK STAGE     TIME                          MAXIMUM AVERAGE STAGE
                                      6-HR       24-HR       72-HR     24.92-HR
+   (FEET)      (HR)
   1123.09      12.17                1121.64     1121.28     1121.27     1121.27

                         CUMULATIVE AREA =       .40 SQ MI


*** *** *** *** *** *** *** *** *** *** *** *** *** *** *** *** *** *** *** *** *** *** *** *** *** *** *** *** *** *** *** *** ***

             **************
             *            *
 134 KK      *    WC21B   *
             *            *
             **************
                            SUB-BASIN WC21B -LAND USE - NATURAL DESERT HILLSLOPES,MINOR DEVELOPMENT
                            24-HOUR TYPE II RAINFALL WAS USED TO FIND TC & R FOR THIS BASIN
                            THIS BASIN USED RAINFALL REDUCTION FACTOR OF .97

              SUBBASIN RUNOFF DATA

 138 BA         SUBBASIN CHARACTERISTICS
                      TAREA        .02  SUBBASIN AREA

                PRECIPITATION DATA

  16 PB               STORM       4.07  BASIN TOTAL PRECIPITATION

  16 PI            INCREMENTAL PRECIPITATION PATTERN
                       .00       .00       .00       .00       .00       .00       .00       .00       .00       .00
                       .00       .00       .00       .00       .00       .00       .00       .00       .00       .00
                       .00       .00       .00       .00       .00       .00       .00       .00       .00       .00
                       .00       .00       .00       .00       .00       .00       .00       .00       .00       .00
                       .00       .00       .00       .00       .00       .00       .00       .00       .00       .00
                       .00       .00       .00       .00       .00       .00       .00       .00       .00       .00
                       .00       .00       .00       .00       .00       .00       .00       .00       .00       .00
                       .00       .00       .00       .00       .00       .00       .00       .00       .00       .00
```



```
                       .00       .00       .00       .00       .00       .00       .00       .00       .00       .00
                       .00       .00       .00       .00       .00       .00       .00       .00       .00       .00
                       .00       .00       .00       .00       .00       .00       .00       .00       .00       .00
                       .00       .00       .00       .00       .00       .00       .00       .00       .00       .00
                       .00       .00       .00       .00       .00       .00       .01       .01       .01       .01
                       .01       .01       .01       .01       .01       .01       .01       .01       .06       .06
                       .06       .06       .06       .06       .01       .01       .01       .01       .01       .01
                       .01       .01       .01       .01       .01       .01       .00       .00       .00       .00
                       .00       .00       .00       .00       .00       .00       .00       .00       .00       .00
                       .00       .00       .00       .00       .00       .00       .00       .00       .00       .00
                       .00       .00       .00       .00       .00       .00       .00       .00       .00       .00
                       .00       .00       .00       .00       .00       .00       .00       .00       .00       .00
                       .00       .00       .00       .00       .00       .00       .00       .00       .00       .00
                       .00       .00       .00       .00       .00       .00       .00       .00       .00       .00
                       .00       .00       .00       .00       .00       .00       .00       .00       .00       .00
                       .00       .00       .00       .00       .00       .00       .00       .00       .00       .00
                       .00       .00       .00       .00       .00       .00       .00       .00       .00       .00
                       .00       .00       .00       .00       .00       .00       .00       .00       .00       .00
                       .00       .00       .00       .00       .00       .00       .00       .00       .00       .00
                       .00       .00       .00       .00       .00       .00       .00       .00       .00       .00
                       .00       .00       .00       .00       .00       .00       .00       .00

 139 LG          GREEN AND AMPT LOSS RATE
                      STRTL        .15  STARTING LOSS
                        DTH        .26  MOISTURE DEFICIT
                       PSIF       4.10  WETTING FRONT SUCTION
                      XKSAT        .24  HYDRAULIC CONDUCTIVITY
                      RTIMP        .00  PERCENT IMPERVIOUS AREA

 140 UC          CLARK UNITGRAPH
                         TC        .28  TIME OF CONCENTRATION
                          R        .38  STORAGE COEFFICIENT

 141 UA          ACCUMULATED-AREA VS. TIME,  11 ORDINATES
                         .0       3.0       5.0       8.0      12.0      20.0      43.0      75.0      90.0      96.0
                      100.0

                                                          ***

                                         UNIT HYDROGRAPH PARAMETERS
                                    CLARK   TC=    .28 HR,        R=   .38 HR
                                   SNYDER   TP=    .29 HR,       CP=   .57

                                              UNIT HYDROGRAPH
                                        27 END-OF-PERIOD ORDINATES
                  1.        9.       23.       29.       24.       20.       16.       13.       10.        8.
                  7.        5.        4.        3.        3.        2.        2.        1.        1.        1.
                  1.        1.        0.        0.        0.        0.        0.

      ***           ***           ***           ***           ***

                      HYDROGRAPH AT STATION     WC21B

   TOTAL RAINFALL =     4.07, TOTAL LOSS =     2.68, TOTAL EXCESS =     1.40

 PEAK FLOW      TIME                          MAXIMUM AVERAGE FLOW
                                      6-HR       24-HR       72-HR     24.92-HR
+   (CFS)       (HR)
                          (CFS)
+       27.     12.17                    4.          1.          1.          1.
                       (INCHES)      1.389       1.389       1.389       1.389
                        (AC-FT)         2.          2.          2.          2.

                         CUMULATIVE AREA =       .02 SQ MI


*** *** *** *** *** *** *** *** *** *** *** *** *** *** *** *** *** *** *** *** *** *** *** *** *** *** *** *** *** *** *** *** ***

             **************
             *            *
 143 KK      *   RRHV10   *
             *            *
             **************
                           ROUTE FLOW FROM SUB-BASIN WC21B TO COMPUTATION POINT CPHV4

              HYDROGRAPH ROUTING DATA

 145 RS          STORAGE ROUTING
                      NSTPS          2  NUMBER OF SUBREACHES
                       ITYP       ELEV  TYPE OF INITIAL CONDITION
                     RSVRIC    1129.00  INITIAL CONDITION
                          X        .00 WORKING R AND D COEFFICIENT

 146 RC          NORMAL DEPTH CHANNEL
                        ANL       .035  LEFT OVERBANK N-VALUE
                       ANCH       .035  MAIN CHANNEL N-VALUE
                        ANR       .035  RIGHT OVERBANK N-VALUE
                      RLNTH      1110.  REACH LENGTH
                        SEL      .0220  ENERGY SLOPE
                      ELMAX     1130.0  MAX. ELEV. FOR STORAGE/OUTFLOW CALCULATION

                                          CROSS-SECTION DATA
                            --- LEFT OVERBANK --- + ------ MAIN CHANNEL ------- + --- RIGHT OVERBANK ---
```

```
 148 RY        ELEVATION  1130.00   1129.75   1129.50   1129.00   1129.00   1129.50   1129.75   1130.00
 147 RX        DISTANCE       .00     25.00     50.00     75.00    100.00    125.00    175.00    200.00

                                                   ***

                              COMPUTED STORAGE-OUTFLOW-ELEVATION DATA

              STORAGE        .00       .04       .08       .13       .19       .26       .33       .41       .49       .59
              OUTFLOW        .00      1.21      4.03      8.29     14.05     21.35     30.30     40.98     53.47     67.88
            ELEVATION    1129.00   1129.05   1129.11   1129.16   1129.21   1129.26   1129.32   1129.37   1129.42   1129.47

              STORAGE        .69       .81       .95      1.12      1.30      1.51      1.73      1.96      2.21      2.47
              OUTFLOW      86.09    108.73    134.67    164.38    198.28    237.20    280.92    329.38    382.72    441.09
            ELEVATION    1129.53   1129.58   1129.63   1129.68   1129.74   1129.79   1129.84   1129.89   1129.95   1130.00

*** WARNING *** MODIFIED PULS ROUTING MAY BE NUMERICALLY UNSTABLE FOR OUTFLOWS BETWEEN       53. TO      441.
                THE ROUTED HYDROGRAPH SHOULD BE EXAMINED FOR OSCILLATIONS OR OUTFLOWS GREATER THAN PEAK INFLOWS.
                THIS CAN BE CORRECTED BY DECREASING THE TIME INTERVAL OR INCREASING STORAGE (USE A LONGER REACH.)

      ***          ***          ***          ***          ***

                      HYDROGRAPH AT STATION   RRHV10

 PEAK FLOW     TIME                        MAXIMUM AVERAGE FLOW
                                    6-HR        24-HR        72-HR      24.92-HR
+   (CFS)      (HR)
                           (CFS)
+     26.     12.25                   4.           1.           1.           1.
                         (INCHES)  1.389        1.389        1.389        1.389
                          (AC-FT)     2.           2.           2.           2.

PEAK STORAGE   TIME                        MAXIMUM AVERAGE STORAGE
                                    6-HR        24-HR        72-HR      24.92-HR
+  (AC-FT)     (HR)
      0.      12.25                   0.           0.           0.           0.

 PEAK STAGE    TIME                        MAXIMUM AVERAGE STAGE
                                    6-HR        24-HR        72-HR      24.92-HR
+   (FEET)     (HR)
   1129.29    12.25              1129.06      1129.01      1129.01      1129.01

                         CUMULATIVE AREA =      .02 SQ MI

*** *** *** *** *** *** *** *** *** *** *** *** *** *** *** *** *** *** *** *** *** *** *** *** *** *** *** *** *** *** *** *** ***

               **************
               *            *
 149 KK        *    PM4B    *
               *            *
               **************
                         SUB-BASIN PM4B -LAND USE - NATURAL DESERT HILLSLOPES,MINOR DEVELOPMENT
                         24-HOUR TYPE II RAINFALL WAS USED TO FIND TC & R FOR THIS BASIN
                         THIS BASIN USED RAINFALL REDUCTION FACTOR OF .97

               SUBBASIN RUNOFF DATA

 153 BA          SUBBASIN CHARACTERISTICS
                     TAREA         .14  SUBBASIN AREA

                 PRECIPITATION DATA

  16 PB              STORM        4.07  BASIN TOTAL PRECIPITATION

  16 PI            INCREMENTAL PRECIPITATION PATTERN
                       .00       .00       .00       .00       .00       .00       .00       .00       .00       .00
                       .00       .00       .00       .00       .00       .00       .00       .00       .00       .00
                       .00       .00       .00       .00       .00       .00       .00       .00       .00       .00
                       .00       .00       .00       .00       .00       .00       .00       .00       .00       .00
                       .00       .00       .00       .00       .00       .00       .00       .00       .00       .00
                       .00       .00       .00       .00       .00       .00       .00       .00       .00       .00
                       .00       .00       .00       .00       .00       .00       .00       .00       .00       .00
                       .00       .00       .00       .00       .00       .00       .00       .00       .00       .00
                       .00       .00       .00       .00       .00       .00       .00       .00       .00       .00
                       .00       .00       .00       .00       .00       .00       .00       .00       .00       .00
                       .00       .00       .00       .00       .00       .00       .00       .00       .00       .00
                       .00       .00       .00       .00       .00       .00       .00       .00       .00       .00
                       .00       .00       .00       .00       .00       .00       .01       .01       .01       .01
                       .01       .01       .01       .01       .01       .01       .01       .01       .06       .06
                       .06       .06       .06       .06       .01       .01       .01       .01       .01       .01
                       .01       .01       .01       .01       .01       .01       .00       .00       .00       .00
                       .00       .00       .00       .00       .00       .00       .00       .00       .00       .00
                       .00       .00       .00       .00       .00       .00       .00       .00       .00       .00
                       .00       .00       .00       .00       .00       .00       .00       .00       .00       .00
                       .00       .00       .00       .00       .00       .00       .00       .00       .00       .00
                       .00       .00       .00       .00       .00       .00       .00       .00       .00       .00
                       .00       .00       .00       .00       .00       .00       .00       .00       .00       .00
                       .00       .00       .00       .00       .00       .00       .00       .00       .00       .00
                       .00       .00       .00       .00       .00       .00       .00       .00       .00       .00
                       .00       .00       .00       .00       .00       .00       .00       .00       .00       .00
                       .00       .00       .00       .00       .00       .00       .00       .00       .00       .00
                       .00       .00       .00       .00       .00       .00       .00       .00       .00       .00
```



```
                       .00       .00       .00       .00       .00       .00       .00       .00       .00       .00
                       .00       .00       .00       .00       .00       .00       .00       .00

 154 LG            GREEN AND AMPT LOSS RATE
                       STRTL         .15  STARTING LOSS
                         DTH         .33  MOISTURE DEFICIT
                        PSIF        3.45  WETTING FRONT SUCTION
                       XKSAT         .76  HYDRAULIC CONDUCTIVITY
                       RTIMP       15.00  PERCENT IMPERVIOUS AREA

 155 UC            CLARK UNITGRAPH
                          TC         .28  TIME OF CONCENTRATION
                           R         .19  STORAGE COEFFICIENT

 156 UA            ACCUMULATED-AREA VS. TIME,  11 ORDINATES
                        .0       3.0       5.0       8.0      12.0      20.0      43.0      75.0      90.0      96.0
                     100.0

                                                   ***

                                        UNIT HYDROGRAPH PARAMETERS
                                   CLARK    TC=    .28 HR,        R=   .19 HR
                                  SNYDER    TP=    .26 HR,       CP=   .78

                                             UNIT HYDROGRAPH
                                        14 END-OF-PERIOD ORDINATES
                 15.        89.       228.       263.       177.       113.        72.        46.        29.        19.
                 12.         8.         5.         3.

      ***          ***          ***          ***          ***

                      HYDROGRAPH AT STATION       PM4B

  TOTAL RAINFALL =     4.07, TOTAL LOSS =     2.75, TOTAL EXCESS =     1.33

 PEAK FLOW     TIME                        MAXIMUM AVERAGE FLOW
                                    6-HR        24-HR        72-HR      24.92-HR
+   (CFS)      (HR)
                           (CFS)
+    151.     12.08                  17.           5.           5.           5.
                         (INCHES)  1.143        1.321        1.322        1.322
                          (AC-FT)     9.          10.          10.          10.

                         CUMULATIVE AREA =      .14 SQ MI

*** *** *** *** *** *** *** *** *** *** *** *** *** *** *** *** *** *** *** *** *** *** *** *** *** *** *** *** *** *** *** *** ***

               **************
               *            *
 158 KK        *   CPHV4    *
               *            *
               **************
                         COMBINE ROUTED FLOWS FROM SUB-BASINS WC21B PM4B AND  COMPUTATION POINT CPHV4

 160 HC            HYDROGRAPH COMBINATION
                        ICOMP           3  NUMBER OF HYDROGRAPHS TO COMBINE

                                                   ***

      ***          ***          ***          ***          ***

                      HYDROGRAPH AT STATION      CPHV4

 PEAK FLOW     TIME                        MAXIMUM AVERAGE FLOW
                                    6-HR        24-HR        72-HR      24.92-HR
+   (CFS)      (HR)
                           (CFS)
+    695.     12.17                  91.          26.          25.          25.
                         (INCHES)  1.489        1.718        1.720        1.720
                          (AC-FT)    45.          52.          52.          52.

                         CUMULATIVE AREA =      .57 SQ MI

*** *** *** *** *** *** *** *** *** *** *** *** *** *** *** *** *** *** *** *** *** *** *** *** *** *** *** *** *** *** *** *** ***

               **************
               *            *
 161 KK        *   RRHV11   *
               *            *
               **************
                         ROUTE FLOW FROM COMPUTATION CPHV4 TO COMPUTATION POINT CPHV5

               HYDROGRAPH ROUTING DATA

 163 RS          STORAGE ROUTING
                      NSTPS            1  NUMBER OF SUBREACHES
                       ITYP         ELEV  TYPE OF INITIAL CONDITION
                     RSVRIC      1116.00  INITIAL CONDITION
```

```
                          X        .00 WORKING R AND D COEFFICIENT

 164 RC            NORMAL DEPTH CHANNEL
                        ANL        .035  LEFT OVERBANK N-VALUE
                        ANCH       .040  MAIN CHANNEL N-VALUE
                        ANR        .035  RIGHT OVERBANK N-VALUE
                        RLNTH      340.  REACH LENGTH
                        SEL       .0060  ENERGY SLOPE
                        ELMAX    1121.0  MAX. ELEV. FOR STORAGE/OUTFLOW CALCULATION

                                    CROSS-SECTION DATA
                          --- LEFT OVERBANK --- + ------ MAIN CHANNEL ------- + --- RIGHT OVERBANK ---
 166 RY         ELEVATION  1121.00   1120.00   1118.00   1116.00   1116.00   1118.00   1120.00   1121.00
 165 RX         DISTANCE       .00    100.00    150.00    170.00    190.00    220.00    280.00    340.00

                                              ***

                                  COMPUTED STORAGE-OUTFLOW-ELEVATION DATA

           STORAGE       .00       .05       .11       .18       .27       .37       .49       .62       .76       .93
           OUTFLOW       .00      6.65     22.69     48.00     83.31    129.47    187.37    257.89    349.75    470.65
         ELEVATION   1116.00   1116.26   1116.53   1116.79   1117.05   1117.32   1117.58   1117.84   1118.11   1118.37

           STORAGE      1.13      1.36      1.62      1.91      2.23      2.58      2.98      3.46      4.03      4.68
           OUTFLOW    613.62    782.00    978.65   1206.20   1467.10   1763.67   2061.75   2418.44   2846.06   3349.85
         ELEVATION   1118.63   1118.90   1119.16   1119.42   1119.68   1119.95   1120.21   1120.47   1120.74   1121.00

*** WARNING *** MODIFIED PULS ROUTING MAY BE NUMERICALLY UNSTABLE FOR OUTFLOWS BETWEEN        23. TO      3350.
                THE ROUTED HYDROGRAPH SHOULD BE EXAMINED FOR OSCILLATIONS OR OUTFLOWS GREATER THAN PEAK INFLOWS.
                THIS CAN BE CORRECTED BY DECREASING THE TIME INTERVAL OR INCREASING STORAGE (USE A LONGER REACH.)

     ***          ***          ***          ***          ***

                   HYDROGRAPH AT STATION     RRHV11

 PEAK FLOW      TIME                          MAXIMUM AVERAGE FLOW
                                     6-HR          24-HR         72-HR      24.92-HR
+  (CFS)        (HR)
                             (CFS)
+     692.     12.17                   91.          26.           25.          25.
                          (INCHES)  1.489        1.718         1.719        1.719
                           (AC-FT)    45.          52.           52.          52.

PEAK STORAGE    TIME                          MAXIMUM AVERAGE STORAGE
                                     6-HR          24-HR         72-HR      24.92-HR
+  (AC-FT)      (HR)
       1.      12.17                   0.           0.            0.           0.

 PEAK STAGE     TIME                          MAXIMUM AVERAGE STAGE
                                     6-HR          24-HR         72-HR      24.92-HR
+  (FEET)       (HR)
   1118.75     12.17              1116.77      1116.33       1116.32      1116.32

                     CUMULATIVE AREA =      .57 SQ MI


*** *** *** *** *** *** *** *** *** *** *** *** *** *** *** *** *** *** *** *** *** *** *** *** *** *** *** *** *** *** *** *** ***

              **************
              *            *
 167 KK       *    WC22B   *
              *            *
              **************
                         SUB-BASIN WC22B -LAND USE - NATURAL DESERT HILLSLOPES,MINOR DEVELOPMENT
                         24-HOUR TYPE II RAINFALL WAS USED TO FIND TC & R FOR THIS BASIN
                         THIS BASIN USED RAINFALL REDUCTION FACTOR OF .97

              SUBBASIN RUNOFF DATA

 171 BA         SUBBASIN CHARACTERISTICS
                      TAREA        .01  SUBBASIN AREA

                PRECIPITATION DATA

  16 PB               STORM       4.07  BASIN TOTAL PRECIPITATION

  16 PI           INCREMENTAL PRECIPITATION PATTERN
                      .00      .00      .00      .00      .00      .00      .00      .00      .00      .00
                      .00      .00      .00      .00      .00      .00      .00      .00      .00      .00
                      .00      .00      .00      .00      .00      .00      .00      .00      .00      .00
                      .00      .00      .00      .00      .00      .00      .00      .00      .00      .00
                      .00      .00      .00      .00      .00      .00      .00      .00      .00      .00
                      .00      .00      .00      .00      .00      .00      .00      .00      .00      .00
                      .00      .00      .00      .00      .00      .00      .00      .00      .00      .00
                      .00      .00      .00      .00      .00      .00      .00      .00      .00      .00
                      .00      .00      .00      .00      .00      .00      .00      .00      .00      .00
                      .00      .00      .00      .00      .00      .00      .00      .00      .00      .00
                      .00      .00      .00      .00      .00      .00      .00      .00      .00      .00
                      .00      .00      .00      .00      .00      .00      .00      .00      .00      .00
                      .00      .00      .00      .00      .00      .00      .01      .01      .01      .01
                      .01      .01      .01      .01      .01      .01      .01      .01      .06      .06
                      .06      .06      .06      .06      .01      .01      .01      .01      .01      .01
```



```
                      .01      .01      .01      .01      .01      .01      .00      .00      .00      .00
                      .00      .00      .00      .00      .00      .00      .00      .00      .00      .00
                      .00      .00      .00      .00      .00      .00      .00      .00      .00      .00
                      .00      .00      .00      .00      .00      .00      .00      .00      .00      .00
                      .00      .00      .00      .00      .00      .00      .00      .00      .00      .00
                      .00      .00      .00      .00      .00      .00      .00      .00      .00      .00
                      .00      .00      .00      .00      .00      .00      .00      .00      .00      .00
                      .00      .00      .00      .00      .00      .00      .00      .00      .00      .00
                      .00      .00      .00      .00      .00      .00      .00      .00      .00      .00
                      .00      .00      .00      .00      .00      .00      .00      .00      .00      .00
                      .00      .00      .00      .00      .00      .00      .00      .00      .00      .00
                      .00      .00      .00      .00      .00      .00      .00      .00      .00      .00
                      .00      .00      .00      .00      .00      .00      .00      .00      .00      .00
                      .00      .00      .00      .00      .00      .00      .00      .00

 172 LG         GREEN AND AMPT LOSS RATE
                      STRTL        .15  STARTING LOSS
                        DTH        .26  MOISTURE DEFICIT
                       PSIF       5.80  WETTING FRONT SUCTION
                      XKSAT        .18  HYDRAULIC CONDUCTIVITY
                      RTIMP        .00  PERCENT IMPERVIOUS AREA

 173 UC         CLARK UNITGRAPH
                         TC        .22  TIME OF CONCENTRATION
                          R        .30  STORAGE COEFFICIENT

 174 UA         ACCUMULATED-AREA VS. TIME,  11 ORDINATES
                      .0       3.0       5.0       8.0      12.0      20.0      43.0      75.0      90.0      96.0
                   100.0

                                              ***

                                       UNIT HYDROGRAPH PARAMETERS
                                CLARK   TC=    .22 HR,        R=   .30 HR
                               SNYDER   TP=    .22 HR,       CP=   .54

                                            UNIT HYDROGRAPH
                                      21 END-OF-PERIOD ORDINATES
                   1.        6.       10.        9.        7.        5.        4.        3.        2.        2.
                   1.        1.        1.        1.        0.        0.        0.        0.        0.        0.
                   0.

     ***          ***          ***          ***          ***

                   HYDROGRAPH AT STATION      WC22B

   TOTAL RAINFALL =      4.07, TOTAL LOSS =      2.64, TOTAL EXCESS =      1.44

 PEAK FLOW      TIME                          MAXIMUM AVERAGE FLOW
                                     6-HR          24-HR         72-HR      24.92-HR
+  (CFS)        (HR)
                             (CFS)
+       9.     12.08                    1.           0.            0.           0.
                          (INCHES)  1.431        1.431         1.431        1.431
                           (AC-FT)     1.           1.            1.           1.

                     CUMULATIVE AREA =      .01 SQ MI


*** *** *** *** *** *** *** *** *** *** *** *** *** *** *** *** *** *** *** *** *** *** *** *** *** *** *** *** *** *** *** *** ***

              **************
              *            *
 176 KK       *   RRHV12   *
              *            *
              **************
                         ROUTE FLOW FROM SUB-BASIN WC22B TO COMPUTATION POINT CPHV5

              HYDROGRAPH ROUTING DATA

 178 RS         STORAGE ROUTING
                      NSTPS          3  NUMBER OF SUBREACHES
                       ITYP       ELEV  TYPE OF INITIAL CONDITION
                     RSVRIC    1123.50  INITIAL CONDITION
                          X        .00 WORKING R AND D COEFFICIENT

 179 RC         NORMAL DEPTH CHANNEL
                        ANL       .035  LEFT OVERBANK N-VALUE
                       ANCH       .040  MAIN CHANNEL N-VALUE
                        ANR       .035  RIGHT OVERBANK N-VALUE
                      RLNTH      1020.  REACH LENGTH
                        SEL      .0230  ENERGY SLOPE
                      ELMAX     1124.5  MAX. ELEV. FOR STORAGE/OUTFLOW CALCULATION

                                    CROSS-SECTION DATA
                          --- LEFT OVERBANK --- + ------ MAIN CHANNEL ------- + --- RIGHT OVERBANK ---
 181 RY         ELEVATION  1124.50   1124.00   1123.50   1123.50   1123.50   1123.50   1124.00   1124.50
 180 RX         DISTANCE       .00     30.00     70.00     90.00    100.00    120.00    135.00    160.00

                                              ***

                                  COMPUTED STORAGE-OUTFLOW-ELEVATION DATA
```

STORAGE	.00	.07	.14	.22	.30	.40	.50	.61	.72	.84
OUTFLOW	.00	2.17	7.18	14.65	24.54	36.86	51.67	69.04	89.02	111.72
ELEVATION	1123.50	1123.55	1123.61	1123.66	1123.71	1123.76	1123.82	1123.87	1123.92	1123.97
STORAGE	.97	1.11	1.25	1.40	1.56	1.73	1.90	2.08	2.26	2.46
OUTFLOW	137.21	165.61	197.01	231.46	269.05	309.86	353.96	401.44	452.38	506.86
ELEVATION	1124.03	1124.08	1124.13	1124.18	1124.24	1124.29	1124.34	1124.39	1124.45	1124.50

*** WARNING *** MODIFIED PULS ROUTING MAY BE NUMERICALLY UNSTABLE FOR OUTFLOWS BETWEEN 15. TO 507.
THE ROUTED HYDROGRAPH SHOULD BE EXAMINED FOR OSCILLATIONS OR OUTFLOWS GREATER THAN PEAK INFLOWS.
THIS CAN BE CORRECTED BY DECREASING THE TIME INTERVAL OR INCREASING STORAGE (USE A LONGER REACH.)

*** *** *** *** ***

HYDROGRAPH AT STATION RRHV12

PEAK FLOW	TIME		MAXIMUM AVERAGE FLOW			
			6-HR	24-HR	72-HR	24.92-HR
+ (CFS)	(HR)					
		(CFS)				
+ 9.	12.25		1.	0.	0.	0.
		(INCHES)	1.431	1.431	1.431	1.431
		(AC-FT)	1.	1.	1.	1.

PEAK STORAGE	TIME	MAXIMUM AVERAGE STORAGE			
		6-HR	24-HR	72-HR	24.92-HR
+ (AC-FT)	(HR)				
0.	12.17	0.	0.	0.	0.

PEAK STAGE	TIME	MAXIMUM AVERAGE STAGE			
		6-HR	24-HR	72-HR	24.92-HR
+ (FEET)	(HR)				
1123.62	12.25	1123.52	1123.50	1123.50	1123.50

CUMULATIVE AREA = .01 SQ MI

*** ***

```
182 KK      **************
            *            *
            *     CPHV5  *
            *            *
            **************
```

COMBINE ROUTED FLOWS FROM SUB-BASIN WC22B AND COMPUTATION POINT CPHV4

184 HC HYDROGRAPH COMBINATION
ICOMP 2 NUMBER OF HYDROGRAPHS TO COMBINE

*** *** *** *** ***

HYDROGRAPH AT STATION CPHV5

PEAK FLOW	TIME		MAXIMUM AVERAGE FLOW			
			6-HR	24-HR	72-HR	24.92-HR
+ (CFS)	(HR)					
		(CFS)				
+ 700.	12.17		92.	26.	25.	25.
		(INCHES)	1.488	1.714	1.716	1.716
		(AC-FT)	45.	52.	52.	52.

CUMULATIVE AREA = .57 SQ MI

*** ***

```
185 KK      **************
            *            *
            *    RRHV13  *
            *            *
            **************
```

ROUTE FLOW FROM COMPUTATION CPHV5 TO COMPUTATION POINT CPHV6

HYDROGRAPH ROUTING DATA

187 RS STORAGE ROUTING
NSTPS 1 NUMBER OF SUBREACHES
ITYP ELEV TYPE OF INITIAL CONDITION
RSVRIC 1114.00 INITIAL CONDITION
X .00 WORKING R AND D COEFFICIENT

188 RC NORMAL DEPTH CHANNEL
ANL .035 LEFT OVERBANK N-VALUE
ANCH .040 MAIN CHANNEL N-VALUE
ANR .035 RIGHT OVERBANK N-VALUE
RLNTH 430. REACH LENGTH
SEL .0050 ENERGY SLOPE

ELMAX 1116.0 MAX. ELEV. FOR STORAGE/OUTFLOW CALCULATION

CROSS-SECTION DATA
--- LEFT OVERBANK --- + ------ MAIN CHANNEL ------- + --- RIGHT OVERBANK ---

190 RY	ELEVATION	1117.00	1116.00	1116.00	1114.00	1114.00	1115.00	1115.00	1116.00
189 RX	DISTANCE	.00	70.00	130.00	160.00	180.00	220.00	340.00	410.00

***

COMPUTED STORAGE-OUTFLOW-ELEVATION DATA

STORAGE	.00	.02	.05	.09	.13	.18	.23	.29	.36	.43
OUTFLOW	.00	1.31	4.42	9.27	15.96	24.64	35.44	48.52	64.03	82.11
ELEVATION	1114.00	1114.11	1114.21	1114.32	1114.42	1114.53	1114.63	1114.74	1114.84	1114.95
STORAGE	.57	.78	1.00	1.23	1.47	1.72	1.98	2.25	2.53	2.81
OUTFLOW	107.25	148.35	200.99	264.03	336.94	419.44	511.41	612.79	723.56	843.78
ELEVATION	1115.05	1115.16	1115.26	1115.37	1115.47	1115.58	1115.68	1115.79	1115.89	1116.00

*** WARNING *** MODIFIED PULS ROUTING MAY BE NUMERICALLY UNSTABLE FOR OUTFLOWS BETWEEN 264. TO 844.
THE ROUTED HYDROGRAPH SHOULD BE EXAMINED FOR OSCILLATIONS OR OUTFLOWS GREATER THAN PEAK INFLOWS.
THIS CAN BE CORRECTED BY DECREASING THE TIME INTERVAL OR INCREASING STORAGE (USE A LONGER REACH.)

*** *** *** *** ***

HYDROGRAPH AT STATION RRHV13

PEAK FLOW	TIME		MAXIMUM AVERAGE FLOW			
			6-HR	24-HR	72-HR	24.92-HR
+ (CFS)	(HR)					
		(CFS)				
+ 686.	12.17		92.	26.	25.	25.
		(INCHES)	1.488	1.714	1.715	1.715
		(AC-FT)	45.	52.	52.	52.

PEAK STORAGE	TIME	MAXIMUM AVERAGE STORAGE			
		6-HR	24-HR	72-HR	24.92-HR
+ (AC-FT)	(HR)				
2.	12.17	0.	0.	0.	0.

PEAK STAGE	TIME	MAXIMUM AVERAGE STAGE			
		6-HR	24-HR	72-HR	24.92-HR
+ (FEET)	(HR)				
1115.86	12.17	1114.65	1114.32	1114.31	1114.31

CUMULATIVE AREA = .57 SQ MI

*** ***

```
191 KK      **************
            *            *
            *     WC23B  *
            *            *
            **************
```

SUB-BASIN WC23B -LAND USE - DESERT MOUNTAIN,DESERT HILLS;MINOR DEVELOPMENT
24-HOUR TYPE II RAINFALL WAS USED TO FIND TC & R FOR THIS BASIN
THIS BASIN USED RAINFALL REDUCTION FACTOR OF .97

SUBBASIN RUNOFF DATA

195 BA SUBBASIN CHARACTERISTICS
TAREA .40 SUBBASIN AREA

PRECIPITATION DATA

16 PB STORM 4.07 BASIN TOTAL PRECIPITATION

16 PI INCREMENTAL PRECIPITATION PATTERN

.00	.00	.00	.00	.00	.00	.00	.00	.00	.00
.00	.00	.00	.00	.00	.00	.00	.00	.00	.00
.00	.00	.00	.00	.00	.00	.00	.00	.00	.00
.00	.00	.00	.00	.00	.00	.00	.00	.00	.00
.00	.00	.00	.00	.00	.00	.00	.00	.00	.00
.00	.00	.00	.00	.00	.00	.00	.00	.00	.00
.00	.00	.00	.00	.00	.00	.00	.00	.00	.00
.00	.00	.00	.00	.00	.00	.00	.00	.00	.00
.00	.00	.00	.00	.00	.00	.00	.00	.00	.00
.00	.00	.00	.00	.00	.00	.00	.00	.00	.00
.00	.00	.00	.00	.00	.00	.00	.00	.00	.00
.00	.00	.00	.00	.00	.00	.00	.00	.00	.00
.00	.00	.00	.00	.00	.00	.00	.00	.00	.00
.00	.00	.00	.00	.00	.00	.00	.00	.00	.00
.00	.00	.00	.00	.00	.00	.00	.00	.00	.00
.00	.00	.00	.00	.00	.00	.01	.01	.01	.01
.01	.01	.01	.01	.01	.01	.01	.01	.06	.06
.06	.06	.06	.06	.01	.01	.01	.01	.01	.01
.01	.01	.01	.01	.01	.01	.00	.00	.00	.00
.00	.00	.00	.00	.00	.00	.00	.00	.00	.00
.00	.00	.00	.00	.00	.00	.00	.00	.00	.00
.00	.00	.00	.00	.00	.00	.00	.00	.00	.00
.00	.00	.00	.00	.00	.00	.00	.00	.00	.00
.00	.00	.00	.00	.00	.00	.00	.00	.00	.00
.00	.00	.00	.00	.00	.00	.00	.00	.00	.00

```
                 .00        .00        .00        .00        .00        .00        .00        .00        .00        .00
                 .00        .00        .00        .00        .00        .00        .00        .00        .00        .00
                 .00        .00        .00        .00        .00        .00        .00        .00        .00        .00
                 .00        .00        .00        .00        .00        .00        .00        .00        .00        .00
                 .00        .00        .00        .00        .00        .00        .00        .00        .00        .00
                 .00        .00        .00        .00        .00        .00        .00        .00

 196 LG          GREEN AND AMPT LOSS RATE
                       STRTL          .15  STARTING LOSS
                         DTH          .30  MOISTURE DEFICIT
                        PSIF         4.12  WETTING FRONT SUCTION
                       XKSAT          .25  HYDRAULIC CONDUCTIVITY
                       RTIMP        60.00  PERCENT IMPERVIOUS AREA

 197 UC          CLARK UNITGRAPH
                          TC          .30  TIME OF CONCENTRATION
                           R          .25  STORAGE COEFFICIENT

 198 UA          ACCUMULATED-AREA VS. TIME,  11 ORDINATES
                        .0        3.0        5.0        8.0       12.0       20.0       43.0       75.0       90.0       96.0
                     100.0

                                                                      ***

                                                        UNIT HYDROGRAPH PARAMETERS
                                                   CLARK   TC=   .30 HR,        R=   .25 HR
                                                  SNYDER   TP=   .28 HR,       CP=   .74

                                                             UNIT HYDROGRAPH
                                                        18 END-OF-PERIOD ORDINATES
                 33.       170.       499.       656.       502.       357.       254.       181.       129.        91.
                 65.        46.        33.        23.        17.        12.         8.         6.

        ***                ***                ***                ***                ***

                                  HYDROGRAPH AT STATION    WC23B

   TOTAL RAINFALL =    4.07, TOTAL LOSS =    1.09, TOTAL EXCESS =    2.98

  PEAK FLOW      TIME                              MAXIMUM AVERAGE FLOW
                                      6-HR        24-HR        72-HR      24.92-HR
+   (CFS)        (HR)
                            (CFS)
+      604.     12.17                    97.          32.          31.           31.
                          (INCHES)    2.251        2.961        2.965         2.965
                           (AC-FT)      48.          63.          63.           63.

                             CUMULATIVE AREA =      .40 SQ MI


*** *** *** *** *** *** *** *** *** *** *** *** *** *** *** *** *** *** *** *** *** *** *** *** *** *** *** *** *** *** *** *** ***


                *************
                *           *
 200 KK         *   RRHV14  *
                *           *
                *************
                               ROUTE FLOW FROM SUB-BASIN WC23B AND TO COMPUTATION POINT CPHV6

               HYDROGRAPH ROUTING DATA

 202 RS           STORAGE ROUTING
                       NSTPS           1  NUMBER OF SUBREACHES
                        ITYP        ELEV  TYPE OF INITIAL CONDITION
                      RSVRIC     1120.00  INITIAL CONDITION
                           X         .00 WORKING R AND D COEFFICIENT

 203 RC           NORMAL DEPTH CHANNEL
                         ANL        .035  LEFT OVERBANK N-VALUE
                        ANCH        .035  MAIN CHANNEL N-VALUE
                         ANR        .035  RIGHT OVERBANK N-VALUE
                       RLNTH       1020.  REACH LENGTH
                         SEL       .0270  ENERGY SLOPE
                       ELMAX      1122.5  MAX. ELEV. FOR STORAGE/OUTFLOW CALCULATION

                                                    CROSS-SECTION DATA
                             --- LEFT OVERBANK --- + ------ MAIN CHANNEL ------- + --- RIGHT OVERBANK ---
 205 RY        ELEVATION  1122.50   1122.00   1121.50   1120.00   1120.00   1121.50   1122.00   1122.50
 204 RX         DISTANCE      .00     40.00     80.00    100.00    120.00    140.00    170.00    210.00

                                                                      ***

                                                    COMPUTED STORAGE-OUTFLOW-ELEVATION DATA

           STORAGE        .00        .07        .14        .23        .33        .44        .56        .70        .84        .99
           OUTFLOW        .00       4.92      16.19      33.07      55.56      83.82     118.10     158.67     205.82     259.84
         ELEVATION    1120.00    1120.13    1120.26    1120.39    1120.53    1120.66    1120.79    1120.92    1121.05    1121.18

           STORAGE       1.16       1.33       1.53       1.77       2.08       2.44       2.86       3.34       3.89       4.51
           OUTFLOW     321.03     389.66     476.25     581.35     702.36     842.26    1002.95    1188.27    1401.09    1643.94
         ELEVATION    1121.32    1121.45    1121.58    1121.71    1121.84    1121.97    1122.11    1122.24    1122.37    1122.50
```



```
 *** WARNING *** MODIFIED PULS ROUTING MAY BE NUMERICALLY UNSTABLE FOR OUTFLOWS BETWEEN       118. TO      1644.
                 THE ROUTED HYDROGRAPH SHOULD BE EXAMINED FOR OSCILLATIONS OR OUTFLOWS GREATER THAN PEAK INFLOWS.
                 THIS CAN BE CORRECTED BY DECREASING THE TIME INTERVAL OR INCREASING STORAGE (USE A LONGER REACH.)

        ***                ***                ***                ***                ***

                                  HYDROGRAPH AT STATION    RRHV14

  PEAK FLOW      TIME                              MAXIMUM AVERAGE FLOW
                                      6-HR        24-HR        72-HR      24.92-HR
+   (CFS)        (HR)
                            (CFS)
+      604.     12.17                    97.          32.          31.           31.
                          (INCHES)    2.250        2.960        2.964         2.964
                           (AC-FT)      48.          63.          63.           63.

 PEAK STORAGE    TIME                            MAXIMUM AVERAGE STORAGE
                                      6-HR        24-HR        72-HR      24.92-HR
+  (AC-FT)       (HR)
         2.     12.17                     0.           0.           0.            0.

  PEAK STAGE     TIME                             MAXIMUM AVERAGE STAGE
                                      6-HR        24-HR        72-HR      24.92-HR
+   (FEET)       (HR)
    1121.74     12.17                1120.57      1120.29      1120.28       1120.28

                             CUMULATIVE AREA =      .40 SQ MI


*** *** *** *** *** *** *** *** *** *** *** *** *** *** *** *** *** *** *** *** *** *** *** *** *** *** *** *** *** *** *** *** ***


                *************
                *           *
 206 KK         *   CPHV6   *
                *           *
                *************
                               COMBINE ROUTED FLOWS FROM SUB-BASIN WC23B AND  COMPUTATION POINT CPHV5

 208 HC           HYDROGRAPH COMBINATION
                       ICOMP           2  NUMBER OF HYDROGRAPHS TO COMBINE
                                                                      ***

        ***                ***                ***                ***                ***

                                  HYDROGRAPH AT STATION    CPHV6

  PEAK FLOW      TIME                              MAXIMUM AVERAGE FLOW
                                      6-HR        24-HR        72-HR      24.92-HR
+   (CFS)        (HR)
                            (CFS)
+     1290.     12.17                   189.          58.          56.           56.
                          (INCHES)    1.801        2.226        2.229         2.229
                           (AC-FT)      93.         115.         116.          116.

                             CUMULATIVE AREA =      .97 SQ MI


*** *** *** *** *** *** *** *** *** *** *** *** *** *** *** *** *** *** *** *** *** *** *** *** *** *** *** *** *** *** *** *** ***


                *************
                *           *
 209 KK         *   RRHV15  *
                *           *
                *************
                               ROUTE FLOW FROM COMPUTATION CPHV6 TO COMPUTATION POINT CPHV7

               HYDROGRAPH ROUTING DATA

 211 RS           STORAGE ROUTING
                       NSTPS           2  NUMBER OF SUBREACHES
                        ITYP        ELEV  TYPE OF INITIAL CONDITION
                      RSVRIC     1105.00  INITIAL CONDITION
                           X         .00 WORKING R AND D COEFFICIENT

 212 RC           NORMAL DEPTH CHANNEL
                         ANL        .035  LEFT OVERBANK N-VALUE
                        ANCH        .040  MAIN CHANNEL N-VALUE
                         ANR        .035  RIGHT OVERBANK N-VALUE
                       RLNTH       1980.  REACH LENGTH
                         SEL       .0080  ENERGY SLOPE
                       ELMAX      1110.0  MAX. ELEV. FOR STORAGE/OUTFLOW CALCULATION

                                                    CROSS-SECTION DATA
                             --- LEFT OVERBANK --- + ------ MAIN CHANNEL ------- + --- RIGHT OVERBANK ---
 214 RY        ELEVATION  1110.00   1106.00   1106.00   1105.00   1105.00   1106.00   1108.00   1110.00
 213 RX         DISTANCE      .00    170.00    430.00    470.00    490.00    530.00    580.00    630.00

                                                                      ***
```

```
                              COMPUTED STORAGE-OUTFLOW-ELEVATION DATA

      STORAGE        .00       .37       .98      1.85      3.59      8.05     12.72     17.60     22.69     28.00
      OUTFLOW        .00      9.02     35.61     84.29    170.98    435.52    850.41   1394.77   2059.94   2841.40
    ELEVATION    1105.00   1105.26   1105.53   1105.79   1106.05   1106.32   1106.58   1106.84   1107.11   1107.37

      STORAGE      33.52     39.25     45.19     51.34     57.71     64.29     71.09     78.09     85.31     92.74
      OUTFLOW    3736.68   4744.49   5864.36   7096.32   8440.79   9898.49  11470.33  13157.39  14960.88  16882.58
    ELEVATION    1107.63   1107.90   1108.16   1108.42   1108.68   1108.95   1109.21   1109.47   1109.74   1110.00

*** WARNING *** MODIFIED PULS ROUTING MAY BE NUMERICALLY UNSTABLE FOR OUTFLOWS BETWEEN      2060. TO     16883.
                THE ROUTED HYDROGRAPH SHOULD BE EXAMINED FOR OSCILLATIONS OR OUTFLOWS GREATER THAN PEAK INFLOWS.
                THIS CAN BE CORRECTED BY DECREASING THE TIME INTERVAL OR INCREASING STORAGE (USE A LONGER REACH.)

         ***             ***             ***             ***             ***

                                 HYDROGRAPH AT STATION   RRHV15

  PEAK FLOW      TIME                            MAXIMUM AVERAGE FLOW
                                         6-HR        24-HR        72-HR      24.92-HR
+   (CFS)        (HR)
                             (CFS)
+    1217.      12.25                     188.          58.          56.          56.
                           (INCHES)      1.801        2.224        2.225        2.225
                            (AC-FT)        93.         115.         115.         115.

 PEAK STORAGE    TIME                           MAXIMUM AVERAGE STORAGE
                                         6-HR        24-HR        72-HR      24.92-HR
+  (AC-FT)       (HR)
          8.    12.25                       2.           1.           1.           1.

  PEAK STAGE     TIME                            MAXIMUM AVERAGE STAGE
                                         6-HR        24-HR        72-HR      24.92-HR
+   (FEET)       (HR)
   1106.76      12.25                  1105.79      1105.43      1105.42      1105.42

                           CUMULATIVE AREA =       .97 SQ MI


*** *** *** *** *** *** *** *** *** *** *** *** *** *** *** *** *** *** *** *** *** *** *** *** *** *** *** *** *** *** *** *** *** ***


              **************
              *            *
 215 KK       *     PM5B   *
              *            *
              **************
                             SUB-BASIN PM5B -LAND USE - NATURAL DESERT HILLSLOPES,MINOR DEVELOPMENT
                             24-HOUR TYPE II RAINFALL WAS USED TO FIND TC & R FOR THIS BASIN
                             THIS BASIN USED RAINFALL REDUCTION FACTOR OF .97

                SUBBASIN RUNOFF DATA

 219 BA           SUBBASIN CHARACTERISTICS
                        TAREA          .13  SUBBASIN AREA

                  PRECIPITATION DATA

  16 PB                 STORM         4.07  BASIN TOTAL PRECIPITATION

  16 PI             INCREMENTAL PRECIPITATION PATTERN
                        .00       .00       .00       .00       .00       .00       .00       .00       .00       .00
                        .00       .00       .00       .00       .00       .00       .00       .00       .00       .00
                        .00       .00       .00       .00       .00       .00       .00       .00       .00       .00
                        .00       .00       .00       .00       .00       .00       .00       .00       .00       .00
                        .00       .00       .00       .00       .00       .00       .00       .00       .00       .00
                        .00       .00       .00       .00       .00       .00       .00       .00       .00       .00
                        .00       .00       .00       .00       .00       .00       .00       .00       .00       .00
                        .00       .00       .00       .00       .00       .00       .00       .00       .00       .00
                        .00       .00       .00       .00       .00       .00       .00       .00       .00       .00
                        .00       .00       .00       .00       .00       .00       .00       .00       .00       .00
                        .00       .00       .00       .00       .00       .00       .00       .00       .00       .00
                        .00       .00       .00       .00       .00       .00       .00       .00       .00       .00
                        .00       .00       .00       .00       .00       .00       .01       .01       .01       .01
                        .01       .01       .01       .01       .01       .01       .01       .01       .06       .06
                        .06       .06       .06       .06       .01       .01       .01       .01       .01       .01
                        .01       .01       .01       .01       .01       .01       .00       .00       .00       .00
                        .00       .00       .00       .00       .00       .00       .00       .00       .00       .00
                        .00       .00       .00       .00       .00       .00       .00       .00       .00       .00
                        .00       .00       .00       .00       .00       .00       .00       .00       .00       .00
                        .00       .00       .00       .00       .00       .00       .00       .00       .00       .00
                        .00       .00       .00       .00       .00       .00       .00       .00       .00       .00
                        .00       .00       .00       .00       .00       .00       .00       .00       .00       .00
                        .00       .00       .00       .00       .00       .00       .00       .00       .00       .00
                        .00       .00       .00       .00       .00       .00       .00       .00       .00       .00
                        .00       .00       .00       .00       .00       .00       .00       .00       .00       .00
                        .00       .00       .00       .00       .00       .00       .00       .00       .00       .00
                        .00       .00       .00       .00       .00       .00       .00       .00       .00       .00
                        .00       .00       .00       .00       .00       .00       .00       .00       .00       .00
                        .00       .00       .00       .00       .00       .00       .00       .00

 220 LG           GREEN AND AMPT LOSS RATE
                        STRTL          .15  STARTING LOSS
```



```
                          DTH          .31  MOISTURE DEFICIT
                         PSIF         4.20  WETTING FRONT SUCTION
                        XKSAT          .52  HYDRAULIC CONDUCTIVITY
                        RTIMP        15.00  PERCENT IMPERVIOUS AREA

 221 UC           CLARK UNITGRAPH
                           TC          .43  TIME OF CONCENTRATION
                            R          .31  STORAGE COEFFICIENT

 222 UA           ACCUMULATED-AREA VS. TIME,  11 ORDINATES
                         .0       3.0       5.0       8.0      12.0      20.0      43.0      75.0      90.0      96.0
                      100.0

                                                          ***

                                              UNIT HYDROGRAPH PARAMETERS
                                        CLARK  TC=    .43 HR,         R=   .31 HR
                                       SNYDER  TP=    .39 HR,        CP=   .81

                                                    UNIT HYDROGRAPH
                                              23 END-OF-PERIOD ORDINATES
                     6.        18.        53.       130.       172.       148.       115.        87.        66.        51.
                    38.        29.        22.        17.        13.        10.         7.         6.         4.         3.
                     3.         2.         1.

         ***             ***             ***             ***             ***

                                 HYDROGRAPH AT STATION      PM5B

    TOTAL RAINFALL =     4.07, TOTAL LOSS =     2.60, TOTAL EXCESS =     1.48

  PEAK FLOW      TIME                            MAXIMUM AVERAGE FLOW
                                         6-HR        24-HR        72-HR      24.92-HR
+   (CFS)        (HR)
                             (CFS)
+     134.      12.25                      18.           5.           5.           5.
                           (INCHES)      1.293        1.471        1.472        1.472
                            (AC-FT)         9.          10.          10.          10.

                           CUMULATIVE AREA =       .13 SQ MI


*** *** *** *** *** *** *** *** *** *** *** *** *** *** *** *** *** *** *** *** *** *** *** *** *** *** *** *** *** *** *** *** *** ***


              **************
              *            *
 224 KK       *     CPHV7  *
              *            *
              **************
                             COMBINE ROUTED FLOWS FROM SUB-BASIN PM5B AND  COMPUTATION POINT CPHV6

 226 HC           HYDROGRAPH COMBINATION
                        ICOMP            2  NUMBER OF HYDROGRAPHS TO COMBINE
                                                          ***

         ***             ***             ***             ***             ***

                                 HYDROGRAPH AT STATION     CPHV7

  PEAK FLOW      TIME                            MAXIMUM AVERAGE FLOW
                                         6-HR        24-HR        72-HR      24.92-HR
+   (CFS)        (HR)
                             (CFS)
+    1351.      12.25                     207.          63.          61.          61.
                           (INCHES)      1.741        2.135        2.136        2.136
                            (AC-FT)       102.         126.         126.         126.

                           CUMULATIVE AREA =      1.10 SQ MI


*** *** *** *** *** *** *** *** *** *** *** *** *** *** *** *** *** *** *** *** *** *** *** *** *** *** *** *** *** *** *** *** *** ***


              **************
              *            *
 227 KK       *    RRHV16  *
              *            *
              **************
                             ROUTE FLOW FROM COMPUTATION CPHV7 TO COMPUTATION POINT CPHV8

                HYDROGRAPH ROUTING DATA

 229 RS           STORAGE ROUTING
                        NSTPS            1  NUMBER OF SUBREACHES
                         ITYP         ELEV  TYPE OF INITIAL CONDITION
                       RSVRIC      1097.00  INITIAL CONDITION
                            X          .00 WORKING R AND D COEFFICIENT

 230 RC           NORMAL DEPTH CHANNEL
                          ANL         .065  LEFT OVERBANK N-VALUE
```

```
                         ANCH        .065  MAIN CHANNEL N-VALUE
                          ANR        .065  RIGHT OVERBANK N-VALUE
                        RLNTH        400.  REACH LENGTH
                          SEL       .0080  ENERGY SLOPE
                        ELMAX      1100.0  MAX. ELEV. FOR STORAGE/OUTFLOW CALCULATION

                                      CROSS-SECTION DATA
                           --- LEFT OVERBANK --- + ------ MAIN CHANNEL ------- + --- RIGHT OVERBANK ---
232 RY         ELEVATION  1100.00   1098.00   1098.00   1097.00   1097.00   1098.00   1099.00   1100.00
231 RX          DISTANCE      .00    210.00    315.00    430.00    540.00    640.00    800.00    930.00

                                              ***

                                 COMPUTED STORAGE-OUTFLOW-ELEVATION DATA

           STORAGE        .00       .18       .42       .70      1.03      1.41      1.84      2.42      3.12      3.87
           OUTFLOW        .00     11.04     37.50     79.01    136.60    211.57    305.29    440.22    619.78    834.51
         ELEVATION    1097.00   1097.16   1097.32   1097.47   1097.63   1097.79   1097.95   1098.10   1098.26   1098.42

           STORAGE       4.69      5.56      6.50      7.50      8.55      9.65     10.81     12.03     13.29     14.61
           OUTFLOW    1084.78   1371.50   1695.74   2059.31   2463.66   2908.24   3393.97   3921.84   4492.81   5107.88
         ELEVATION    1098.58   1098.74   1098.89   1099.05   1099.21   1099.37   1099.53   1099.68   1099.84   1100.00

*** WARNING *** MODIFIED PULS ROUTING MAY BE NUMERICALLY UNSTABLE FOR OUTFLOWS BETWEEN       835. TO      5108.
                THE ROUTED HYDROGRAPH SHOULD BE EXAMINED FOR OSCILLATIONS OR OUTFLOWS GREATER THAN PEAK INFLOWS.
                THIS CAN BE CORRECTED BY DECREASING THE TIME INTERVAL OR INCREASING STORAGE (USE A LONGER REACH.)

      ***           ***           ***           ***           ***

                        HYDROGRAPH AT STATION    RRHV16

   PEAK FLOW      TIME                           MAXIMUM AVERAGE FLOW
                                         6-HR        24-HR        72-HR      24.92-HR
 +   (CFS)        (HR)
                             (CFS)
 +    1345.      12.33                   207.          63.          61.           61.
                          (INCHES)      1.741        2.133        2.134         2.134
                           (AC-FT)       102.         125.         126.          126.

  PEAK STORAGE    TIME                          MAXIMUM AVERAGE STORAGE
                                         6-HR        24-HR        72-HR      24.92-HR
 +  (AC-FT)       (HR)
          5.     12.33                     1.           0.           0.            0.

   PEAK STAGE     TIME                          MAXIMUM AVERAGE STAGE
                                         6-HR        24-HR        72-HR      24.92-HR
 +   (FEET)       (HR)
     1098.72     12.33                1097.59      1097.28      1097.27       1097.27

                        CUMULATIVE AREA =       1.10 SQ MI


*** *** *** *** *** *** *** *** *** *** *** *** *** *** *** *** *** *** *** *** *** *** *** *** *** *** *** *** *** *** *** *** ***


             **************
             *            *
233 KK       *   A43A2B   *
             *            *
             **************
                     SUB-BASIN A43A2B -LAND USE - DESERT MOUNTAIN,DESERT HILLS;MINOR DEVELOPMENT
                     24-HOUR TYPE II RAINFALL WAS USED TO FIND TC & R FOR THIS BASIN
                     THIS BASIN USED RAINFALL REDUCTION FACTOR OF .97

             SUBBASIN RUNOFF DATA

237 BA         SUBBASIN CHARACTERISTICS
                 TAREA          .09  SUBBASIN AREA

               PRECIPITATION DATA

 16 PB             STORM       4.07  BASIN TOTAL PRECIPITATION

 16 PI           INCREMENTAL PRECIPITATION PATTERN
                   .00      .00      .00      .00      .00      .00      .00      .00      .00      .00
                   .00      .00      .00      .00      .00      .00      .00      .00      .00      .00
                   .00      .00      .00      .00      .00      .00      .00      .00      .00      .00
                   .00      .00      .00      .00      .00      .00      .00      .00      .00      .00
                   .00      .00      .00      .00      .00      .00      .00      .00      .00      .00
                   .00      .00      .00      .00      .00      .00      .00      .00      .00      .00
                   .00      .00      .00      .00      .00      .00      .00      .00      .00      .00
                   .00      .00      .00      .00      .00      .00      .00      .00      .00      .00
                   .00      .00      .00      .00      .00      .00      .00      .00      .00      .00
                   .00      .00      .00      .00      .00      .00      .00      .00      .00      .00
                   .00      .00      .00      .00      .00      .00      .00      .00      .00      .00
                   .00      .00      .00      .00      .00      .00      .00      .00      .00      .00
                   .00      .00      .00      .00      .00      .00      .01      .01      .01      .01
                   .01      .01      .01      .01      .01      .01      .01      .01      .06      .06
                   .06      .06      .06      .06      .01      .01      .01      .01      .01      .01
                   .01      .01      .01      .01      .01      .01      .00      .00      .00      .00
                   .00      .00      .00      .00      .00      .00      .00      .00      .00      .00
                   .00      .00      .00      .00      .00      .00      .00      .00      .00      .00
                   .00      .00      .00      .00      .00      .00      .00      .00      .00      .00
```



```
                   .00      .00      .00      .00      .00      .00      .00      .00      .00      .00
                   .00      .00      .00      .00      .00      .00      .00      .00      .00      .00
                   .00      .00      .00      .00      .00      .00      .00      .00      .00      .00
                   .00      .00      .00      .00      .00      .00      .00      .00      .00      .00
                   .00      .00      .00      .00      .00      .00      .00      .00      .00      .00
                   .00      .00      .00      .00      .00      .00      .00      .00      .00      .00
                   .00      .00      .00      .00      .00      .00      .00      .00      .00      .00
                   .00      .00      .00      .00      .00      .00      .00      .00      .00      .00
                   .00      .00      .00      .00      .00      .00      .00      .00      .00      .00
                   .00      .00      .00      .00      .00      .00      .00      .00

238 LG         GREEN AND AMPT LOSS RATE
                 STRTL          .15  STARTING LOSS
                   DTH          .28  MOISTURE DEFICIT
                  PSIF         6.30  WETTING FRONT SUCTION
                 XKSAT          .17  HYDRAULIC CONDUCTIVITY
                 RTIMP        30.00  PERCENT IMPERVIOUS AREA

239 UC         CLARK UNITGRAPH
                    TC          .32  TIME OF CONCENTRATION
                     R          .27  STORAGE COEFFICIENT

240 UA         ACCUMULATED-AREA VS. TIME,  11 ORDINATES
                    .0       3.0       5.0       8.0      12.0      20.0      43.0      75.0      90.0      96.0
                 100.0

                                              ***

                                    UNIT HYDROGRAPH PARAMETERS
                                 CLARK   TC=   .32 HR,        R=   .27 HR
                                SNYDER   TP=   .30 HR,       CP=   .74

                                         UNIT HYDROGRAPH
                                    20 END-OF-PERIOD ORDINATES
             6.        29.        96.       139.       113.        83.        61.        45.        33.        24.
            18.        13.        10.         7.         5.         4.         3.         2.         2.         1.

      ***           ***           ***           ***           ***

                        HYDROGRAPH AT STATION    A43A2B

   TOTAL RAINFALL =      4.07, TOTAL LOSS =      1.86, TOTAL EXCESS =      2.21

   PEAK FLOW      TIME                           MAXIMUM AVERAGE FLOW
                                         6-HR        24-HR        72-HR      24.92-HR
 +   (CFS)        (HR)
                             (CFS)
 +     127.      12.17                    18.           5.           5.            5.
                          (INCHES)      1.845        2.200        2.202         2.202
                           (AC-FT)         9.          11.          11.           11.

                        CUMULATIVE AREA =        .09 SQ MI


*** *** *** *** *** *** *** *** *** *** *** *** *** *** *** *** *** *** *** *** *** *** *** *** *** *** *** *** *** *** *** *** ***


             **************
             *            *
242 KK       *   RRHV17   *
             *            *
             **************
                     ROUTE FLOW FROM SUB-BASIN A43A2B TO COMPUTATION POINT CPHV8

             HYDROGRAPH ROUTING DATA

244 RS         STORAGE ROUTING
                 NSTPS            1  NUMBER OF SUBREACHES
                  ITYP         ELEV  TYPE OF INITIAL CONDITION
                RSVRIC      1099.00  INITIAL CONDITION
                     X          .00 WORKING R AND D COEFFICIENT

245 RC         NORMAL DEPTH CHANNEL
                   ANL         .065  LEFT OVERBANK N-VALUE
                  ANCH         .065  MAIN CHANNEL N-VALUE
                   ANR         .065  RIGHT OVERBANK N-VALUE
                 RLNTH         440.  REACH LENGTH
                   SEL        .0150  ENERGY SLOPE
                 ELMAX       1100.0  MAX. ELEV. FOR STORAGE/OUTFLOW CALCULATION

                                      CROSS-SECTION DATA
                           --- LEFT OVERBANK --- + ------ MAIN CHANNEL ------- + --- RIGHT OVERBANK ---
247 RY         ELEVATION  1100.00   1099.00   1099.00   1099.00   1099.00   1099.00   1099.00   1100.00
246 RX          DISTANCE      .00    105.00    135.00    165.00    190.00    210.00    260.00    320.00

                                              ***

                                 COMPUTED STORAGE-OUTFLOW-ELEVATION DATA

           STORAGE        .00       .08       .17       .27       .37       .47       .58       .69       .81       .93
           OUTFLOW        .00      3.25     10.43     20.76     33.96     49.93     68.58     89.89    113.86    140.49
         ELEVATION    1099.00   1099.05   1099.11   1099.16   1099.21   1099.26   1099.32   1099.37   1099.42   1099.47

           STORAGE       1.05      1.19      1.32      1.46      1.61      1.75      1.91      2.07      2.23      2.40
```

```
          OUTFLOW      169.79    201.78    236.50    273.97    314.23    357.30    403.24    452.07    503.84    558.59
        ELEVATION     1099.53   1099.58   1099.63   1099.68   1099.74   1099.79   1099.84   1099.89   1099.95   1100.00

 *** WARNING *** MODIFIED PULS ROUTING MAY BE NUMERICALLY UNSTABLE FOR OUTFLOWS BETWEEN       357. TO        559.
                 THE ROUTED HYDROGRAPH SHOULD BE EXAMINED FOR OSCILLATIONS OR OUTFLOWS GREATER THAN PEAK INFLOWS.
                 THIS CAN BE CORRECTED BY DECREASING THE TIME INTERVAL OR INCREASING STORAGE (USE A LONGER REACH.)

      ***            ***            ***            ***            ***

                         HYDROGRAPH AT STATION    RRHV17

  PEAK FLOW      TIME                         MAXIMUM AVERAGE FLOW
                                   6-HR         24-HR        72-HR      24.92-HR
+   (CFS)        (HR)
                           (CFS)
+     123.      12.17                 18.           5.           5.           5.
                         (INCHES)  1.844        2.199        2.201        2.201
                          (AC-FT)     9.          11.          11.          11.

 PEAK STORAGE    TIME                        MAXIMUM AVERAGE STORAGE
                                   6-HR         24-HR        72-HR      24.92-HR
+   (AC-FT)      (HR)
        1.      12.17                  0.           0.           0.           0.

  PEAK STAGE     TIME                         MAXIMUM AVERAGE STAGE
                                   6-HR         24-HR        72-HR      24.92-HR
+   (FEET)       (HR)
   1099.44      12.17             1099.11      1099.04      1099.04      1099.04

                         CUMULATIVE AREA =      .09 SQ MI


*** *** *** *** *** *** *** *** *** *** *** *** *** *** *** *** *** *** *** *** *** *** *** *** *** *** *** *** *** *** *** *** *** ***


                  **************
                  *            *
 248 KK           *    CPHV8   *
                  *            *
                  **************
                          COMBINE ROUTED FLOWS FROM SUB-BASIN A43A2B AND  COMPUTATION POINT CPHV7

 250 HC             HYDROGRAPH COMBINATION
                        ICOMP           2  NUMBER OF HYDROGRAPHS TO COMBINE
                                                                            ***

      ***            ***            ***            ***            ***

                         HYDROGRAPH AT STATION     CPHV8

  PEAK FLOW      TIME                         MAXIMUM AVERAGE FLOW
                                   6-HR         24-HR        72-HR      24.92-HR
+   (CFS)        (HR)
                           (CFS)
+    1450.      12.33                224.          69.          66.          66.
                         (INCHES)  1.749        2.138        2.139        2.139
                          (AC-FT)    111.         136.         136.         136.

                         CUMULATIVE AREA =     1.19 SQ MI


*** *** *** *** *** *** *** *** *** *** *** *** *** *** *** *** *** *** *** *** *** *** *** *** *** *** *** *** *** *** *** *** *** ***


                  **************
                  *            *
 251 KK           *   RRHV18   *
                  *            *
                  **************
                          ROUTE FLOW FROM COMPUTATION CPHV8 TO COMPUTATION POINT CPHV10

                  HYDROGRAPH ROUTING DATA

 253 RS             STORAGE ROUTING
                      NSTPS            3  NUMBER OF SUBREACHES
                       ITYP         ELEV  TYPE OF INITIAL CONDITION
                     RSVRIC      1086.00  INITIAL CONDITION
                          X          .00  WORKING R AND D COEFFICIENT

 254 RC             NORMAL DEPTH CHANNEL
                        ANL         .065  LEFT OVERBANK N-VALUE
                       ANCH         .065  MAIN CHANNEL N-VALUE
                        ANR         .065  RIGHT OVERBANK N-VALUE
                      RLNTH        2200.  REACH LENGTH
                        SEL        .0080  ENERGY SLOPE
                      ELMAX       1088.0  MAX. ELEV. FOR STORAGE/OUTFLOW CALCULATION

                                           CROSS-SECTION DATA
                         --- LEFT OVERBANK --- + ------ MAIN CHANNEL ------- + --- RIGHT OVERBANK ---
 256 RY           ELEVATION   1088.00   1086.00   1086.00   1086.00   1086.00   1086.00   1086.00   1088.00
```



```
 255 RX           DISTANCE       .00     80.00    200.00    300.00    360.00    440.00    550.00    610.00
                                                                        ***

                                            COMPUTED STORAGE-OUTFLOW-ELEVATION DATA

                       STORAGE       .00      2.52      5.07      7.67     10.30     12.98     15.69     18.44     21.23     24.07
                       OUTFLOW       .00     22.66     72.14    142.22    230.40    335.23    455.71    591.12    740.91    904.66
                     ELEVATION   1086.00   1086.11   1086.21   1086.32   1086.42   1086.53   1086.63   1086.74   1086.84   1086.95

                       STORAGE     26.93     29.84     32.79     35.78     38.80     41.87     44.97     48.12     51.30     54.52
                       OUTFLOW   1082.02   1272.72   1476.53   1693.26   1922.77   2164.93   2419.63   2686.78   2966.31   3258.17
                     ELEVATION   1087.05   1087.16   1087.26   1087.37   1087.47   1087.58   1087.68   1087.79   1087.89   1088.00


      ***            ***            ***            ***            ***

                         HYDROGRAPH AT STATION    RRHV18

  PEAK FLOW      TIME                         MAXIMUM AVERAGE FLOW
                                   6-HR         24-HR        72-HR      24.92-HR
+   (CFS)        (HR)
                           (CFS)
+    1325.      12.50                224.          68.          65.          65.
                         (INCHES)  1.747        2.120        2.120        2.120
                          (AC-FT)    111.         135.         135.         135.

 PEAK STORAGE    TIME                        MAXIMUM AVERAGE STORAGE
                                   6-HR         24-HR        72-HR      24.92-HR
+   (AC-FT)      (HR)
       10.      12.50                  3.           1.           1.           1.

  PEAK STAGE     TIME                         MAXIMUM AVERAGE STAGE
                                   6-HR         24-HR        72-HR      24.92-HR
+   (FEET)       (HR)
   1087.18      12.50             1086.34      1086.14      1086.13      1086.13

                         CUMULATIVE AREA =     1.19 SQ MI


*** *** *** *** *** *** *** *** *** *** *** *** *** *** *** *** *** *** *** *** *** *** *** *** *** *** *** *** *** *** *** *** *** ***


                  **************
                  *            *
 257 KK           *   NWSM1B   *
                  *            *
                  **************
                          SUB-BASIN NWSM1B -LAND USE - DESERT MOUNTAIN;UNDEVELOPED
                          24-HOUR TYPE II RAINFALL WAS USED TO FIND TC & R FOR THIS BASIN
                          THIS BASIN USED RAINFALL REDUCTION FACTOR OF .97

                  SUBBASIN RUNOFF DATA

 261 BA             SUBBASIN CHARACTERISTICS
                       TAREA          .13  SUBBASIN AREA

                    PRECIPITATION DATA

  16 PB                STORM         4.07  BASIN TOTAL PRECIPITATION

  16 PI              INCREMENTAL PRECIPITATION PATTERN
                          .00       .00       .00       .00       .00       .00       .00       .00       .00       .00
                          .00       .00       .00       .00       .00       .00       .00       .00       .00       .00
                          .00       .00       .00       .00       .00       .00       .00       .00       .00       .00
                          .00       .00       .00       .00       .00       .00       .00       .00       .00       .00
                          .00       .00       .00       .00       .00       .00       .00       .00       .00       .00
                          .00       .00       .00       .00       .00       .00       .00       .00       .00       .00
                          .00       .00       .00       .00       .00       .00       .00       .00       .00       .00
                          .00       .00       .00       .00       .00       .00       .00       .00       .00       .00
                          .00       .00       .00       .00       .00       .00       .00       .00       .00       .00
                          .00       .00       .00       .00       .00       .00       .00       .00       .00       .00
                          .00       .00       .00       .00       .00       .00       .00       .00       .00       .00
                          .00       .00       .00       .00       .00       .00       .00       .00       .00       .00
                          .00       .00       .00       .00       .00       .00       .01       .01       .01       .01
                          .01       .01       .01       .01       .01       .01       .01       .01       .06       .06
                          .06       .06       .06       .06       .01       .01       .01       .01       .01       .01
                          .01       .01       .01       .01       .01       .01       .00       .00       .00       .00
                          .00       .00       .00       .00       .00       .00       .00       .00       .00       .00
                          .00       .00       .00       .00       .00       .00       .00       .00       .00       .00
                          .00       .00       .00       .00       .00       .00       .00       .00       .00       .00
                          .00       .00       .00       .00       .00       .00       .00       .00       .00       .00
                          .00       .00       .00       .00       .00       .00       .00       .00       .00       .00
                          .00       .00       .00       .00       .00       .00       .00       .00       .00       .00
                          .00       .00       .00       .00       .00       .00       .00       .00       .00       .00
                          .00       .00       .00       .00       .00       .00       .00       .00       .00       .00
                          .00       .00       .00       .00       .00       .00       .00       .00       .00       .00
                          .00       .00       .00       .00       .00       .00       .00       .00       .00       .00
                          .00       .00       .00       .00       .00       .00       .00       .00       .00       .00
                          .00       .00       .00       .00       .00       .00       .00       .00       .00       .00
                          .00       .00       .00       .00       .00       .00       .00       .00

 262 LG             GREEN AND AMPT LOSS RATE
                      STRTL          .15  STARTING LOSS
```

```
                  DTH          .34  MOISTURE DEFICIT
                 PSIF         2.50  WETTING FRONT SUCTION
                XKSAT         1.14  HYDRAULIC CONDUCTIVITY
                RTIMP        60.00  PERCENT IMPERVIOUS AREA

263 UC       CLARK UNITGRAPH
                   TC          .27  TIME OF CONCENTRATION
                    R          .23  STORAGE COEFFICIENT

264 UA       ACCUMULATED-AREA VS. TIME,  11 ORDINATES
                   .0        3.0        5.0        8.0       12.0       20.0       43.0       75.0       90.0       96.0
               100.0

                                        ***

                               UNIT HYDROGRAPH PARAMETERS
                          CLARK   TC=   .27 HR,        R=   .23 HR
                         SNYDER   TP=   .25 HR,       CP=   .67

                                     UNIT HYDROGRAPH
                               17 END-OF-PERIOD ORDINATES
            13.        89.       201.       215.       152.       105.        72.        50.        34.        24.
            16.        11.         8.         5.         4.         3.         2.

    ***             ***             ***             ***             ***

                    HYDROGRAPH AT STATION   NWSM1B

    TOTAL RAINFALL =    4.07, TOTAL LOSS =    1.38, TOTAL EXCESS =    2.70

  PEAK FLOW      TIME                          MAXIMUM AVERAGE FLOW
                                         6-HR        24-HR       72-HR      24.92-HR
+   (CFS)        (HR)
                               (CFS)
+    168.       12.08                     28.          9.          9.          9.
                             (INCHES)   1.972       2.683       2.687       2.687
                              (AC-FT)     14.         19.         19.         19.

                        CUMULATIVE AREA =     .13 SQ MI

*** *** *** *** *** *** *** *** *** *** *** *** *** *** *** *** *** *** *** *** *** *** *** *** *** *** *** *** *** *** *** *** *** ***

          **************
          *            *
266 KK    *   RR43B1   *
          *            *
          **************
                     ROUTE FLOW FROM SUB-BASIN NWSM1B TO COMPUTATION POINT CPHV9 (1ST REACH)

            HYDROGRAPH ROUTING DATA

268 RS        STORAGE ROUTING
                  NSTPS           1  NUMBER OF SUBREACHES
                   ITYP        ELEV  TYPE OF INITIAL CONDITION
                 RSVRIC     1168.00  INITIAL CONDITION
                      X         .00 WORKING R AND D COEFFICIENT

269 RC        NORMAL DEPTH CHANNEL
                    ANL        .035  LEFT OVERBANK N-VALUE
                   ANCH        .040  MAIN CHANNEL N-VALUE
                    ANR        .035  RIGHT OVERBANK N-VALUE
                  RLNTH       1850.  REACH LENGTH
                    SEL       .4700  ENERGY SLOPE
                  ELMAX      1172.0  MAX. ELEV. FOR STORAGE/OUTFLOW CALCULATION

                                     CROSS-SECTION DATA
                   --- LEFT OVERBANK --- + ------ MAIN CHANNEL ------- + --- RIGHT OVERBANK ---
271 RY       ELEVATION  1172.00   1171.50   1170.00   1168.00   1168.00   1170.00   1171.50   1172.00
270 RX        DISTANCE      .00     40.00    100.00    120.00    135.00    150.00    190.00    240.00

                                        ***

                            COMPUTED STORAGE-OUTFLOW-ELEVATION DATA

          STORAGE        .00        .15        .33        .55        .80       1.08       1.40       1.75       2.13       2.54
          OUTFLOW        .00      29.89      99.99     207.58     354.16     542.11     774.06    1052.76    1380.95    1761.35
        ELEVATION    1168.00    1168.21    1168.42    1168.63    1168.84    1169.05    1169.26    1169.47    1169.68    1169.90

          STORAGE       3.00       3.57       4.27       5.10       6.05       7.12       8.32       9.66      11.30      13.28
          OUTFLOW    2246.94    2862.01    3586.10    4440.05    5441.88    6608.00    7953.71    9398.53   11004.48   12977.42
        ELEVATION    1170.11    1170.32    1170.53    1170.74    1170.95    1171.16    1171.37    1171.58    1171.79    1172.00

*** WARNING *** MODIFIED PULS ROUTING MAY BE NUMERICALLY UNSTABLE FOR OUTFLOWS BETWEEN        30. TO     12977.
                THE ROUTED HYDROGRAPH SHOULD BE EXAMINED FOR OSCILLATIONS OR OUTFLOWS GREATER THAN PEAK INFLOWS.
                THIS CAN BE CORRECTED BY DECREASING THE TIME INTERVAL OR INCREASING STORAGE (USE A LONGER REACH.)

    ***             ***             ***             ***             ***

                    HYDROGRAPH AT STATION   RR43B1

  PEAK FLOW      TIME                          MAXIMUM AVERAGE FLOW
```



```
                                         6-HR        24-HR       72-HR      24.92-HR
+   (CFS)        (HR)
                               (CFS)
+    166.       12.17                     28.          9.          9.          9.
                             (INCHES)   1.972       2.683       2.687       2.687
                              (AC-FT)     14.         19.         19.         19.

  PEAK STORAGE   TIME                        MAXIMUM AVERAGE STORAGE
                                         6-HR        24-HR       72-HR      24.92-HR
+  (AC-FT)       (HR)
        0.      12.08                      0.          0.          0.          0.

  PEAK STAGE     TIME                        MAXIMUM AVERAGE STAGE
                                         6-HR        24-HR       72-HR      24.92-HR
+   (FEET)       (HR)
   1168.55      12.17                 1168.14     1168.05     1168.05     1168.05

                        CUMULATIVE AREA =     .13 SQ MI

*** *** *** *** *** *** *** *** *** *** *** *** *** *** *** *** *** *** *** *** *** *** *** *** *** *** *** *** *** *** *** *** *** ***

          **************
          *            *
272 KK    *   RR43B2   *
          *            *
          **************
                     ROUTE FLOW FROM SUB-BASIN NWSM1B TO COMPUTATION POINT CPHV9 ( 2ND REACH )

            HYDROGRAPH ROUTING DATA

274 RS        STORAGE ROUTING
                  NSTPS           2  NUMBER OF SUBREACHES
                   ITYP        ELEV  TYPE OF INITIAL CONDITION
                 RSVRIC     1118.00  INITIAL CONDITION
                      X         .00 WORKING R AND D COEFFICIENT

275 RC        NORMAL DEPTH CHANNEL
                    ANL        .035  LEFT OVERBANK N-VALUE
                   ANCH        .040  MAIN CHANNEL N-VALUE
                    ANR        .035  RIGHT OVERBANK N-VALUE
                  RLNTH       1000.  REACH LENGTH
                    SEL       .0340  ENERGY SLOPE
                  ELMAX      1120.0  MAX. ELEV. FOR STORAGE/OUTFLOW CALCULATION

                                     CROSS-SECTION DATA
                   --- LEFT OVERBANK --- + ------ MAIN CHANNEL ------- + --- RIGHT OVERBANK ---
277 RY       ELEVATION  1120.00   1119.00   1119.00   1118.00   1118.00   1118.00   1119.00   1120.00
276 RX        DISTANCE      .00     50.00    110.00    410.00    580.00    850.00    970.00   1160.00

                                        ***

                            COMPUTED STORAGE-OUTFLOW-ELEVATION DATA

          STORAGE        .00       1.12       2.34       3.67       5.11       6.65       8.30      10.06      11.92      13.89
          OUTFLOW        .00      72.51     235.62     474.24     784.53    1165.56    1617.70    2141.98    2739.87    3413.08
        ELEVATION    1118.00    1118.11    1118.21    1118.32    1118.42    1118.53    1118.63    1118.74    1118.84    1118.95

          STORAGE      16.03      18.32      20.66      23.07      25.53      28.06      30.65      33.30      36.01      38.78
          OUTFLOW    4210.94    5151.48    6187.65    7317.54    8540.33    9855.74   11263.79   12764.70   14358.86   16046.73
        ELEVATION    1119.05    1119.16    1119.26    1119.37    1119.47    1119.58    1119.68    1119.79    1119.89    1120.00

*** WARNING *** MODIFIED PULS ROUTING MAY BE NUMERICALLY UNSTABLE FOR OUTFLOWS BETWEEN       236. TO     16047.
                THE ROUTED HYDROGRAPH SHOULD BE EXAMINED FOR OSCILLATIONS OR OUTFLOWS GREATER THAN PEAK INFLOWS.
                THIS CAN BE CORRECTED BY DECREASING THE TIME INTERVAL OR INCREASING STORAGE (USE A LONGER REACH.)

    ***             ***             ***             ***             ***

                    HYDROGRAPH AT STATION   RR43B2

  PEAK FLOW      TIME                          MAXIMUM AVERAGE FLOW
                                         6-HR        24-HR       72-HR      24.92-HR
+   (CFS)        (HR)
                               (CFS)
+    161.       12.17                     28.          9.          9.          9.
                             (INCHES)   1.971       2.682       2.686       2.686
                              (AC-FT)     14.         19.         19.         19.

  PEAK STORAGE   TIME                        MAXIMUM AVERAGE STORAGE
                                         6-HR        24-HR       72-HR      24.92-HR
+  (AC-FT)       (HR)
        1.      12.17                      0.          0.          0.          0.

  PEAK STAGE     TIME                        MAXIMUM AVERAGE STAGE
                                         6-HR        24-HR       72-HR      24.92-HR
+   (FEET)       (HR)
   1118.16      12.17                 1118.04     1118.01     1118.01     1118.01

                        CUMULATIVE AREA =     .13 SQ MI
```

```
*** *** *** *** *** *** *** *** *** *** *** *** *** *** *** *** *** *** *** *** *** *** *** *** *** *** *** *** *** *** *** *** *** ***

              **************
              *            *
 278 KK       *   A43A1B   *
              *            *
              **************
                         SUB-BASIN A43A1B -LAND USE - DESERT MOUNTAINS,DESERT HILLS;MINOR DEVELOPMENT
                         24-HOUR TYPE II RAINFALL WAS USED TO FIND TC & R FOR THIS BASIN
                         THIS BASIN USED RAINFALL REDUCTION FACTOR OF .97

            SUBBASIN RUNOFF DATA

 282 BA       SUBBASIN CHARACTERISTICS
                 TAREA         .17  SUBBASIN AREA

              PRECIPITATION DATA

  16 PB          STORM        4.07  BASIN TOTAL PRECIPITATION

  16 PI         INCREMENTAL PRECIPITATION PATTERN
                 .00      .00      .00      .00      .00      .00      .00      .00      .00      .00
                 .00      .00      .00      .00      .00      .00      .00      .00      .00      .00
                 .00      .00      .00      .00      .00      .00      .00      .00      .00      .00
                 .00      .00      .00      .00      .00      .00      .00      .00      .00      .00
                 .00      .00      .00      .00      .00      .00      .00      .00      .00      .00
                 .00      .00      .00      .00      .00      .00      .00      .00      .00      .00
                 .00      .00      .00      .00      .00      .00      .00      .00      .00      .00
                 .00      .00      .00      .00      .00      .00      .00      .00      .00      .00
                 .00      .00      .00      .00      .00      .00      .00      .00      .00      .00
                 .00      .00      .00      .00      .00      .00      .00      .00      .00      .00
                 .00      .00      .00      .00      .00      .00      .00      .00      .00      .00
                 .00      .00      .00      .00      .00      .00      .00      .00      .00      .00
                 .00      .00      .00      .00      .00      .00      .01      .01      .01      .01
                 .01      .01      .01      .01      .01      .01      .01      .01      .06      .06
                 .06      .06      .06      .06      .01      .01      .01      .01      .01      .01
                 .01      .01      .01      .01      .01      .01      .00      .00      .00      .00
                 .00      .00      .00      .00      .00      .00      .00      .00      .00      .00
                 .00      .00      .00      .00      .00      .00      .00      .00      .00      .00
                 .00      .00      .00      .00      .00      .00      .00      .00      .00      .00
                 .00      .00      .00      .00      .00      .00      .00      .00      .00      .00
                 .00      .00      .00      .00      .00      .00      .00      .00      .00      .00
                 .00      .00      .00      .00      .00      .00      .00      .00      .00      .00
                 .00      .00      .00      .00      .00      .00      .00      .00      .00      .00
                 .00      .00      .00      .00      .00      .00      .00      .00      .00      .00
                 .00      .00      .00      .00      .00      .00      .00      .00      .00      .00
                 .00      .00      .00      .00      .00      .00      .00      .00      .00      .00
                 .00      .00      .00      .00      .00      .00      .00      .00      .00      .00
                 .00      .00      .00      .00      .00      .00      .00      .00      .00      .00
                 .00      .00      .00      .00      .00      .00      .00      .00

 283 LG       GREEN AND AMPT LOSS RATE
                 STRTL         .15  STARTING LOSS
                   DTH         .28  MOISTURE DEFICIT
                  PSIF        4.10  WETTING FRONT SUCTION
                 XKSAT         .46  HYDRAULIC CONDUCTIVITY
                 RTIMP       15.00  PERCENT IMPERVIOUS AREA

 284 UC       CLARK UNITGRAPH
                    TC         .28  TIME OF CONCENTRATION
                     R         .15  STORAGE COEFFICIENT

 285 UA       ACCUMULATED-AREA VS. TIME,  11 ORDINATES
                    .0       3.0       5.0       8.0      12.0      20.0      43.0      75.0      90.0      96.0
                 100.0

                                                  ***

                                     UNIT HYDROGRAPH PARAMETERS
                                   CLARK  TC=   .28 HR,        R=   .15 HR
                                  SNYDER  TP=   .25 HR,       CP=   .83

                                            UNIT HYDROGRAPH
                                       12 END-OF-PERIOD ORDINATES
           22.      128.      321.      352.      214.      121.       69.       39.       22.       13.
            7.        4.

     ***           ***           ***           ***           ***

                   HYDROGRAPH AT STATION    A43A1B

    TOTAL RAINFALL =    4.07, TOTAL LOSS =    2.53, TOTAL EXCESS =    1.54

   PEAK FLOW      TIME                          MAXIMUM AVERAGE FLOW
                                      6-HR        24-HR       72-HR     24.92-HR
 +   (CFS)        (HR)
                             (CFS)
 +    235.       12.08                   25.          7.          7.          7.
                            (INCHES)  1.357       1.535       1.536       1.536
                            (AC-FT)     12.         14.         14.         14.

                            CUMULATIVE AREA =     .17 SQ MI
```



```
*** *** *** *** *** *** *** *** *** *** *** *** *** *** *** *** *** *** *** *** *** *** *** *** *** *** *** *** *** *** *** *** *** ***

              **************
              *            *
 287 KK       *   CPHV9    *
              *            *
              **************
                              COMBINE ROUTED FLOW FROM SUB-BASIN NWSM1B WITH RUNOFF FROM SUB-BASIN A43A1B

 289 HC           HYDROGRAPH COMBINATION
                       ICOMP           2  NUMBER OF HYDROGRAPHS TO COMBINE

                                                                  ***

     ***           ***           ***           ***           ***

                         HYDROGRAPH AT STATION    CPHV9

   PEAK FLOW      TIME                          MAXIMUM AVERAGE FLOW
                                      6-HR        24-HR       72-HR     24.92-HR
 +   (CFS)        (HR)
                             (CFS)
 +    382.       12.08                   52.         16.         16.         16.
                            (INCHES)  1.623       2.032       2.034       2.034
                            (AC-FT)     26.         33.         33.         33.

                            CUMULATIVE AREA =     .30 SQ MI

*** *** *** *** *** *** *** *** *** *** *** *** *** *** *** *** *** *** *** *** *** *** *** *** *** *** *** *** *** *** *** *** *** ***

              **************
              *            *
 290 KK       *   RRHV19   *
              *            *
              **************
                   ROUTE FLOW FROM COMPUTATION CPHV9 TO COMPUTATION POINT CPHV10

              HYDROGRAPH ROUTING DATA

 292 RS           STORAGE ROUTING
                      NSTPS            5  NUMBER OF SUBREACHES
                       ITYP         ELEV  TYPE OF INITIAL CONDITION
                     RSVRIC      1091.00  INITIAL CONDITION
                          X          .00  WORKING R AND D COEFFICIENT

 293 RC           NORMAL DEPTH CHANNEL
                        ANL         .065  LEFT OVERBANK N-VALUE
                       ANCH         .065  MAIN CHANNEL N-VALUE
                        ANR         .065  RIGHT OVERBANK N-VALUE
                      RLNTH        1700.  REACH LENGTH
                        SEL        .0140  ENERGY SLOPE
                      ELMAX       1092.0  MAX. ELEV. FOR STORAGE/OUTFLOW CALCULATION

                                              CROSS-SECTION DATA
                            --- LEFT OVERBANK --- + ------ MAIN CHANNEL ------- + --- RIGHT OVERBANK ---
 295 RY         ELEVATION   1092.00   1091.00   1091.00   1091.00   1091.00   1091.00   1091.00   1092.00
 294 RX          DISTANCE       .00     60.00    450.00    530.00    610.00    690.00    830.00    960.00

                                                      ***

                                      COMPUTED STORAGE-OUTFLOW-ELEVATION DATA

            STORAGE       .00      1.59      3.20      4.84      6.49      8.16      9.86     11.57     13.31     15.06
            OUTFLOW       .00     15.46     49.20     96.95    156.99    228.30    310.19    402.14    503.77    614.75
          ELEVATION   1091.00   1091.05   1091.11   1091.16   1091.21   1091.26   1091.32   1091.37   1091.42   1091.47

            STORAGE     16.84     18.63     20.45     22.29     24.15     26.02     27.92     29.84     31.78     33.74
            OUTFLOW    734.85    863.85   1001.59   1147.90   1302.68   1465.81   1637.21   1816.79   2004.49   2200.25
          ELEVATION   1091.53   1091.58   1091.63   1091.68   1091.74   1091.79   1091.84   1091.89   1091.95   1092.00

*** WARNING *** MODIFIED PULS ROUTING MAY BE NUMERICALLY UNSTABLE FOR OUTFLOWS BETWEEN       402. TO       2200.
                THE ROUTED HYDROGRAPH SHOULD BE EXAMINED FOR OSCILLATIONS OR OUTFLOWS GREATER THAN PEAK INFLOWS.
                THIS CAN BE CORRECTED BY DECREASING THE TIME INTERVAL OR INCREASING STORAGE (USE A LONGER REACH.)

     ***           ***           ***           ***           ***

                         HYDROGRAPH AT STATION    RRHV19

   PEAK FLOW      TIME                          MAXIMUM AVERAGE FLOW
                                      6-HR        24-HR       72-HR     24.92-HR
 +   (CFS)        (HR)
                             (CFS)
 +    348.       12.33                   52.         16.         16.         16.
                            (INCHES)  1.620       2.021       2.021       2.021
                            (AC-FT)     26.         32.         32.         32.

 PEAK STORAGE     TIME                        MAXIMUM AVERAGE STORAGE
                                      6-HR        24-HR       72-HR     24.92-HR
```

```
+  (AC-FT)      (HR)
       2.      12.33                       1.          0.          0.          0.

   PEAK STAGE    TIME                               MAXIMUM AVERAGE STAGE
                                        6-HR        24-HR       72-HR     24.92-HR
+   (FEET)       (HR)
   1091.34      12.33                1091.09      1091.03     1091.03      1091.03

                        CUMULATIVE AREA =      .30 SQ MI


*** *** *** *** *** *** *** *** *** *** *** *** *** *** *** *** *** *** *** *** *** *** *** *** *** *** *** *** *** *** *** *** ***


             **************
             *            *
 296 KK      *   CPHV10   *
             *            *
             **************
                          COMBINE ROUTED FLOWS FROM COMPUTATION POINTS CPHV8 AND CPHV9

 298 HC           HYDROGRAPH COMBINATION
                      ICOMP            2  NUMBER OF HYDROGRAPHS TO COMBINE

                                                                 ***

     ***          ***          ***          ***          ***

                        HYDROGRAPH AT STATION     CPHV10

  PEAK FLOW      TIME                              MAXIMUM AVERAGE FLOW
                                        6-HR        24-HR       72-HR     24.92-HR
+   (CFS)        (HR)
                              (CFS)
+    1622.      12.50                   276.          84.         81.          81.
                           (INCHES)    1.722        2.100       2.100        2.100
                            (AC-FT)     137.         167.        167.         167.

                        CUMULATIVE AREA =     1.49 SQ MI


*** *** *** *** *** *** *** *** *** *** *** *** *** *** *** *** *** *** *** *** *** *** *** *** *** *** *** *** *** *** *** *** ***


             **************
             *            *
 299 KK      *   RRHV20   *
             *            *
             **************
                            ROUTE FLOW FROM COMPUTATION CPHV10 TO COMPUTATION POINT CPHV11

                HYDROGRAPH ROUTING DATA

 301 RS           STORAGE ROUTING
                      NSTPS            2  NUMBER OF SUBREACHES
                       ITYP         ELEV  TYPE OF INITIAL CONDITION
                     RSVRIC      1074.50  INITIAL CONDITION
                          X          .00  WORKING R AND D COEFFICIENT

 302 RC           NORMAL DEPTH CHANNEL
                        ANL         .065  LEFT OVERBANK N-VALUE
                       ANCH         .065  MAIN CHANNEL N-VALUE
                        ANR         .065  RIGHT OVERBANK N-VALUE
                      RLNTH        1100.  REACH LENGTH
                        SEL        .0085  ENERGY SLOPE
                      ELMAX       1078.0  MAX. ELEV. FOR STORAGE/OUTFLOW CALCULATION

                                              CROSS-SECTION DATA
                         --- LEFT OVERBANK --- + ------ MAIN CHANNEL ------- + --- RIGHT OVERBANK ---
 304 RY         ELEVATION  1078.00   1076.00   1074.50   1074.50   1074.50   1074.50   1076.00   1078.00
 303 RX          DISTANCE      .00     90.00    480.00    510.00    520.00    530.00    870.00   1300.00

                                                                 ***

                                          COMPUTED STORAGE-OUTFLOW-ELEVATION DATA

         STORAGE         .00        .44       1.30       2.57       4.27       6.38       8.90      11.84      15.20      18.91
         OUTFLOW         .00       9.86      42.60     105.95     206.99     352.27     547.87     799.52    1112.68    1522.72
       ELEVATION     1074.50    1074.68    1074.87    1075.05    1075.24    1075.42    1075.61    1075.79    1075.97    1076.16

         STORAGE       22.84      26.99      31.37      35.97      40.79      45.84      51.10      56.59      62.31      68.24
         OUTFLOW     2004.26    2552.86    3169.55    3855.56    4612.25    5441.06    6343.46    7321.02    8375.28    9507.84
       ELEVATION     1076.34    1076.53    1076.71    1076.89    1077.08    1077.26    1077.45    1077.63    1077.82    1078.00

*** WARNING *** MODIFIED PULS ROUTING MAY BE NUMERICALLY UNSTABLE FOR OUTFLOWS BETWEEN      3170. TO      9508.
                THE ROUTED HYDROGRAPH SHOULD BE EXAMINED FOR OSCILLATIONS OR OUTFLOWS GREATER THAN PEAK INFLOWS.
                THIS CAN BE CORRECTED BY DECREASING THE TIME INTERVAL OR INCREASING STORAGE (USE A LONGER REACH.)

     ***          ***          ***          ***          ***

                        HYDROGRAPH AT STATION     RRHV20
```



```
  PEAK FLOW      TIME                              MAXIMUM AVERAGE FLOW
                                        6-HR        24-HR       72-HR     24.92-HR
+   (CFS)        (HR)
                              (CFS)
+    1540.      12.58                   276.          84.         81.          81.
                           (INCHES)    1.721        2.093       2.093        2.093
                            (AC-FT)     137.         167.        167.         167.

  PEAK STORAGE   TIME                            MAXIMUM AVERAGE STORAGE
                                        6-HR        24-HR       72-HR     24.92-HR
+  (AC-FT)       (HR)
      10.       12.58                     2.           1.          1.           1.

  PEAK STAGE     TIME                              MAXIMUM AVERAGE STAGE
                                        6-HR        24-HR       72-HR     24.92-HR
+   (FEET)       (HR)
   1076.16      12.58                1075.17      1074.84     1074.83      1074.83

                        CUMULATIVE AREA =     1.49 SQ MI


*** *** *** *** *** *** *** *** *** *** *** *** *** *** *** *** *** *** *** *** *** *** *** *** *** *** *** *** *** *** *** *** ***


             **************
             *            *
 305 KK      *    ED47B   *
             *            *
             **************
                       SUB-BASIN ED47B -LAND USE - AGRICULTURE,DESERT MOUNTAIN,DESERT HILLS;MODERATE
                       DEVELOPMENT
                       24-HOUR TYPE II RAINFALL WAS USED TO FIND TC & R FOR THIS BASIN
                       THIS BASIN USED RAINFALL REDUCTION FACTOR OF .97

               SUBBASIN RUNOFF DATA

 310 BA          SUBBASIN CHARACTERISTICS
                      TAREA          .81  SUBBASIN AREA

                 PRECIPITATION DATA

  16 PB               STORM         4.07  BASIN TOTAL PRECIPITATION

  16 PI            INCREMENTAL PRECIPITATION PATTERN
                       .00       .00       .00       .00       .00       .00       .00       .00       .00       .00
                       .00       .00       .00       .00       .00       .00       .00       .00       .00       .00
                       .00       .00       .00       .00       .00       .00       .00       .00       .00       .00
                       .00       .00       .00       .00       .00       .00       .00       .00       .00       .00
                       .00       .00       .00       .00       .00       .00       .00       .00       .00       .00
                       .00       .00       .00       .00       .00       .00       .00       .00       .00       .00
                       .00       .00       .00       .00       .00       .00       .00       .00       .00       .00
                       .00       .00       .00       .00       .00       .00       .00       .00       .00       .00
                       .00       .00       .00       .00       .00       .00       .00       .00       .00       .00
                       .00       .00       .00       .00       .00       .00       .00       .00       .00       .00
                       .00       .00       .00       .00       .00       .00       .00       .00       .00       .00
                       .00       .00       .00       .00       .00       .00       .00       .00       .00       .00
                       .00       .00       .00       .00       .00       .00       .01       .01       .01       .01
                       .01       .01       .01       .01       .01       .01       .01       .01       .06       .06
                       .06       .06       .06       .06       .01       .01       .01       .01       .01       .01
                       .01       .01       .01       .01       .01       .01       .00       .00       .00       .00
                       .00       .00       .00       .00       .00       .00       .00       .00       .00       .00
                       .00       .00       .00       .00       .00       .00       .00       .00       .00       .00
                       .00       .00       .00       .00       .00       .00       .00       .00       .00       .00
                       .00       .00       .00       .00       .00       .00       .00       .00       .00       .00
                       .00       .00       .00       .00       .00       .00       .00       .00       .00       .00
                       .00       .00       .00       .00       .00       .00       .00       .00       .00       .00
                       .00       .00       .00       .00       .00       .00       .00       .00       .00       .00
                       .00       .00       .00       .00       .00       .00       .00       .00       .00       .00
                       .00       .00       .00       .00       .00       .00       .00       .00       .00       .00
                       .00       .00       .00       .00       .00       .00       .00       .00       .00       .00
                       .00       .00       .00       .00       .00       .00       .00       .00       .00       .00
                       .00       .00       .00       .00       .00       .00       .00       .00       .00       .00
                       .00       .00       .00       .00       .00       .00       .00       .00

 311 LG          GREEN AND AMPT LOSS RATE
                      STRTL          .33  STARTING LOSS
                        DTH          .09  MOISTURE DEFICIT
                       PSIF         4.10  WETTING FRONT SUCTION
                      XKSAT          .63  HYDRAULIC CONDUCTIVITY
                      RTIMP        10.00  PERCENT IMPERVIOUS AREA

 312 UC          CLARK UNITGRAPH
                         TC          .28  TIME OF CONCENTRATION
                          R          .11  STORAGE COEFFICIENT

 313 UA          ACCUMULATED-AREA VS. TIME,  11 ORDINATES
                       .0       3.0       5.0       8.0      12.0      20.0      43.0      75.0      90.0      96.0
                    100.0

                                                                 ***

                                              UNIT HYDROGRAPH PARAMETERS
                                         CLARK   TC=    .28 HR,          R=    .11 HR
```

```
                                        SNYDER   TP=   .24 HR,      CP=   .89

                                                UNIT HYDROGRAPH
                                              10 END-OF-PERIOD ORDINATES
             132.      740.     1808.     1840.      939.      436.      203.       94.       44.       20.

      ***              ***              ***              ***              ***

                        HYDROGRAPH AT STATION     ED47B

     TOTAL RAINFALL =    4.07, TOTAL LOSS =     2.66, TOTAL EXCESS =     1.41

  PEAK FLOW     TIME                                MAXIMUM AVERAGE FLOW
                                          6-HR        24-HR        72-HR       24.92-HR
+   (CFS)       (HR)
                  (CFS)
+    1159.     12.08                      112.         31.          30.          30.
                (INCHES)                1.288        1.407        1.408        1.408
                (AC-FT)                   56.          61.          61.          61.

                CUMULATIVE AREA =      .81 SQ MI


*** *** *** *** *** *** *** *** *** *** *** *** *** *** *** *** *** *** *** *** *** *** *** *** *** *** *** *** *** *** *** *** *** *** *** *** ***


            ***************
            *               *
315 KK      *     CPHV11    *
            *               *
            ***************
                        COMBINE ROUTED FLOWS FROM COMPUTATION POINT CPHV10 TO RUNOFF FROM SUB-BASIN
                        ED47B

318 HC              HYDROGRAPH COMBINATION
                         ICOMP           2  NUMBER OF HYDROGRAPHS TO COMBINE

                                                      ***

      ***              ***              ***              ***              ***

                        HYDROGRAPH AT STATION     CPHV11

  PEAK FLOW     TIME                                MAXIMUM AVERAGE FLOW
                                          6-HR        24-HR        72-HR       24.92-HR
+   (CFS)       (HR)
                  (CFS)
+    1601.     12.58                      388.         115.         110.         110.
                (INCHES)                1.566        1.851        1.852        1.852
                (AC-FT)                  192.         227.         227.         227.

                CUMULATIVE AREA =      2.30 SQ MI


*** *** *** *** *** *** *** *** *** *** *** *** *** *** *** *** *** *** *** *** *** *** *** *** *** *** *** *** *** *** *** *** *** *** *** *** ***


            ***************
            *               *
319 KK      *     BASN11    *
            *               *
            ***************
                                  **********************BASIN AT 47TH AND ESTRELLA ROAD**********************
                        BASIN AT THIS LOCATION TO REDUCE FLOWS TO THE WEST
                        THE BASIN HAS A 30 ACRE TOP AND A 23.1 ACRE BOTTOM AREA AND IS 14 FEET DEEP

                    HYDROGRAPH ROUTING DATA

323 RS              STORAGE ROUTING
                         NSTPS           1  NUMBER OF SUBREACHES
                          ITYP        ELEV  TYPE OF INITIAL CONDITION
                         RSVRIC      -1.00  INITIAL CONDITION
                             X         .00 WORKING R AND D COEFFICIENT

324 SA                   AREA        23.1       24.1       25.1       26.1       27.0       28.0       29.0       30.0

325 SQ                DISCHARGE        0.        30.        30.        30.        30.        30.        30.        30.

326 SE                ELEVATION       .00       2.00       4.00       6.00       8.00      10.00      12.00      14.00

                                                      ***

                                            COMPUTED STORAGE-ELEVATION DATA

              STORAGE        .00      47.20      96.39     147.59     200.69     255.68     312.68     371.68
            ELEVATION        .00       2.00       4.00       6.00       8.00      10.00      12.00      14.00

      ***              ***              ***              ***              ***

                        HYDROGRAPH AT STATION     BASN11

  PEAK FLOW     TIME                                MAXIMUM AVERAGE FLOW
```



```
                                          6-HR        24-HR        72-HR       24.92-HR
+   (CFS)       (HR)
                  (CFS)
+      30.     12.08                       30.          18.          17.          17.
                (INCHES)                 .121         .293         .293         .293
                (AC-FT)                    15.          36.          36.          36.

  PEAK STORAGE  TIME                                MAXIMUM AVERAGE STORAGE
                                          6-HR        24-HR        72-HR       24.92-HR
+   (AC-FT)     (HR)
                                           195.         102.          98.          98.
  PEAK STAGE    TIME                                MAXIMUM AVERAGE STAGE
                                          6-HR        24-HR        72-HR       24.92-HR
+   (FEET)      (HR)
                                          7.77         4.08         3.93         3.93

                CUMULATIVE AREA =      2.30 SQ MI


*** *** *** *** *** *** *** *** *** *** *** *** *** *** *** *** *** *** *** *** *** *** *** *** *** *** *** *** *** *** *** *** *** *** *** *** ***


            ***************
            *               *
327 KK      *     DFED47    *
            *               *
            ***************
                        RATE CHANNEL CROSSECTION AT COMPUTATION POINT ED47B FOR SPLIT FLOW
                        DIVERTED FLOW IS ROUTED THROUGH SUB BASIN IR55B

     DT           DIVERSION
                       ISTAD      DIR55B  DIVERSION HYDROGRAPH IDENTIFICATION

     DI              INFLOW         .00     139.00     558.00    1324.00    2507.00

     DQ         DIVERTED FLOW        .00      20.00     126.00     372.00     801.00

                                                                     ***

      ***              ***              ***              ***              ***

                        DIVERSION HYDROGRAPH    DIR55B

  PEAK FLOW     TIME                                MAXIMUM AVERAGE FLOW
                                          6-HR        24-HR        72-HR       24.92-HR
+   (CFS)       (HR)
                  (CFS)
+       4.     12.08                        4.           3.           3.           3.
                (INCHES)                 .017         .042         .042         .042
                (AC-FT)                     2.           5.           5.           5.

                CUMULATIVE AREA =      2.30 SQ MI

      ***              ***              ***              ***              ***

                        HYDROGRAPH AT STATION     DFED47

  PEAK FLOW     TIME                                MAXIMUM AVERAGE FLOW
                                          6-HR        24-HR        72-HR       24.92-HR
+   (CFS)       (HR)
                  (CFS)
+      26.     12.08                       26.          16.          15.          15.
                (INCHES)                 .104         .251         .251         .251
                (AC-FT)                    13.          31.          31.          31.

                CUMULATIVE AREA =      2.30 SQ MI


*** *** *** *** *** *** *** *** *** *** *** *** *** *** *** *** *** *** *** *** *** *** *** *** *** *** *** *** *** *** *** *** *** *** *** *** ***


            ***************
            *               *
333 KK      *     RRHV21    *
            *               *
            ***************
                        ROUTE FLOW FROM COMPUTATION POINT CPHV11 TO COMPUTATION POINT CPHV12
                        (1ST REACH)

                    HYDROGRAPH ROUTING DATA

336 RS              STORAGE ROUTING
                         NSTPS           5  NUMBER OF SUBREACHES
                          ITYP        ELEV  TYPE OF INITIAL CONDITION
                         RSVRIC     1059.50  INITIAL CONDITION
                             X         .00 WORKING R AND D COEFFICIENT

337 RC              NORMAL DEPTH CHANNEL
                           ANL        .015  LEFT OVERBANK N-VALUE
                          ANCH        .065  MAIN CHANNEL N-VALUE
```

ANR	.065	RIGHT OVERBANK N-VALUE
RLNTH	2660.	REACH LENGTH
SEL	.0060	ENERGY SLOPE
ELMAX	1060.7	MAX. ELEV. FOR STORAGE/OUTFLOW CALCULATION

CROSS-SECTION DATA

--- LEFT OVERBANK --- + ------ MAIN CHANNEL ------- + --- RIGHT OVERBANK ---

339 RY	ELEVATION	1060.70	1060.00	1060.00	1060.00	1059.50	1059.50	1060.00	1060.70
338 RX	DISTANCE	.00	30.00	60.00	150.00	180.00	600.00	660.00	690.00

***

COMPUTED STORAGE-OUTFLOW-ELEVATION DATA

STORAGE	.00	1.64	3.32	5.05	6.82	8.64	10.50	12.40	14.39	16.83
OUTFLOW	.00	7.51	24.03	47.56	77.37	113.02	154.23	200.81	225.82	291.25
ELEVATION	1059.50	1059.56	1059.63	1059.69	1059.75	1059.82	1059.88	1059.94	1060.00	1060.07
STORAGE	19.29	21.77	24.27	26.79	29.34	31.90	34.49	37.10	39.72	42.37
OUTFLOW	365.62	448.25	538.82	637.10	742.97	856.31	977.05	1105.14	1240.53	1383.19
ELEVATION	1060.13	1060.19	1060.26	1060.32	1060.38	1060.45	1060.51	1060.57	1060.64	1060.70

*** *** *** *** ***

HYDROGRAPH AT STATION RRHV21

PEAK FLOW	TIME		MAXIMUM AVERAGE FLOW			
			6-HR	24-HR	72-HR	24.92-HR
+ (CFS)	(HR)					
		(CFS)				
+ 26.	16.17		26.	14.	13.	13.
		(INCHES)	.104	.223	.223	.223
		(AC-FT)	13.	27.	27.	27.

PEAK STORAGE	TIME	MAXIMUM AVERAGE STORAGE			
		6-HR	24-HR	72-HR	24.92-HR
+ (AC-FT)	(HR)				
1.	15.17	1.	0.	0.	0.

PEAK STAGE	TIME	MAXIMUM AVERAGE STAGE			
		6-HR	24-HR	72-HR	24.92-HR
+ (FEET)	(HR)				
1059.63	14.67	1059.63	1059.57	1059.57	1059.57

CUMULATIVE AREA = 2.30 SQ MI

*** ***

```
              **************
              *            *
340 KK        *   RRHV22   *
              *            *
              **************
```

ROUTE FLOW FROM COMPUTATION POINT CPHV11 TO COMPUTATION POINT CPHV12
(2ND REACH)

HYDROGRAPH ROUTING DATA

343 RS STORAGE ROUTING

NSTPS	7	NUMBER OF SUBREACHES
ITYP	ELEV	TYPE OF INITIAL CONDITION
RSVRIC	1039.50	INITIAL CONDITION
X	.00	WORKING R AND D COEFFICIENT

344 RC NORMAL DEPTH CHANNEL

ANL	.070	LEFT OVERBANK N-VALUE
ANCH	.070	MAIN CHANNEL N-VALUE
ANR	.070	RIGHT OVERBANK N-VALUE
RLNTH	2724.	REACH LENGTH
SEL	.0070	ENERGY SLOPE
ELMAX	1040.1	MAX. ELEV. FOR STORAGE/OUTFLOW CALCULATION

CROSS-SECTION DATA

--- LEFT OVERBANK --- + ------ MAIN CHANNEL ------- + --- RIGHT OVERBANK ---

346 RY	ELEVATION	1040.10	1039.00	1039.50	1039.50	1039.50	1039.50	1040.00	1040.10
345 RX	DISTANCE	.00	230.00	700.00	701.00	1260.00	1261.00	1480.00	1520.00

***

COMPUTED STORAGE-OUTFLOW-ELEVATION DATA

STORAGE	.00	.12	.48	1.08	1.92	3.01	4.33	5.89	7.70	10.46
OUTFLOW	.00	.32	2.05	6.04	13.02	23.60	38.37	57.89	82.65	116.99
ELEVATION	1039.00	1039.06	1039.12	1039.17	1039.23	1039.29	1039.35	1039.41	1039.46	1039.52
STORAGE	14.69	19.05	23.55	28.18	32.94	37.85	42.89	48.06	53.37	58.80
OUTFLOW	172.72	243.47	327.76	424.86	534.37	656.03	789.68	935.20	1092.72	1262.04
ELEVATION	1039.58	1039.64	1039.69	1039.75	1039.81	1039.87	1039.93	1039.98	1040.04	1040.10

*** *** *** *** ***

HYDROGRAPH AT STATION RRHV22

PEAK FLOW	TIME		MAXIMUM AVERAGE FLOW			
			6-HR	24-HR	72-HR	24.92-HR
+ (CFS)	(HR)					
		(CFS)				
+ 199.	.08		33.	19.	20.	20.
		(INCHES)	.133	.314	.330	.330
		(AC-FT)	16.	39.	41.	41.

PEAK STORAGE	TIME	MAXIMUM AVERAGE STORAGE			
		6-HR	24-HR	72-HR	24.92-HR
+ (AC-FT)	(HR)				
2.	.00	0.	0.	0.	0.

PEAK STAGE	TIME	MAXIMUM AVERAGE STAGE			
		6-HR	24-HR	72-HR	24.92-HR
+ (FEET)	(HR)				
1039.60	.08	1039.30	1039.21	1039.22	1039.22

CUMULATIVE AREA = 2.30 SQ MI

*** ***

```
              **************
              *            *
347 KK        *   IR59B    *
              *            *
              **************
```

SUB-BASIN IR59B -LAND USE - AGRICULTURE; MINOR DEVELOPMENT
24-HOUR TYPE II RAINFALL WAS USED TO FIND TC & R FOR THIS BASIN
THIS BASIN USED RAINFALL REDUCTION FACTOR OF .97

SUBBASIN RUNOFF DATA

351 BA SUBBASIN CHARACTERISTICS

TAREA .66 SUBBASIN AREA

PRECIPITATION DATA

16 PB STORM 4.07 BASIN TOTAL PRECIPITATION

16 PI INCREMENTAL PRECIPITATION PATTERN

.00	.00	.00	.00	.00	.00	.00	.00	.00	.00
.00	.00	.00	.00	.00	.00	.00	.00	.00	.00
.00	.00	.00	.00	.00	.00	.00	.00	.00	.00
.00	.00	.00	.00	.00	.00	.00	.00	.00	.00
.00	.00	.00	.00	.00	.00	.00	.00	.00	.00
.00	.00	.00	.00	.00	.00	.00	.00	.00	.00
.00	.00	.00	.00	.00	.00	.00	.00	.00	.00
.00	.00	.00	.00	.00	.00	.00	.00	.00	.00
.00	.00	.00	.00	.00	.00	.00	.00	.00	.00
.00	.00	.00	.00	.00	.00	.00	.00	.00	.00
.00	.00	.00	.00	.00	.00	.00	.00	.00	.00
.00	.00	.00	.00	.00	.00	.00	.00	.00	.00
.00	.00	.00	.00	.00	.00	.01	.01	.01	.01
.01	.01	.01	.01	.01	.01	.01	.01	.06	.06
.06	.06	.06	.06	.01	.01	.01	.01	.01	.01
.01	.01	.01	.01	.01	.01	.00	.00	.00	.00
.00	.00	.00	.00	.00	.00	.00	.00	.00	.00
.00	.00	.00	.00	.00	.00	.00	.00	.00	.00
.00	.00	.00	.00	.00	.00	.00	.00	.00	.00
.00	.00	.00	.00	.00	.00	.00	.00	.00	.00
.00	.00	.00	.00	.00	.00	.00	.00	.00	.00
.00	.00	.00	.00	.00	.00	.00	.00	.00	.00
.00	.00	.00	.00	.00	.00	.00	.00	.00	.00
.00	.00	.00	.00	.00	.00	.00	.00	.00	.00
.00	.00	.00	.00	.00	.00	.00	.00	.00	.00
.00	.00	.00	.00	.00	.00	.00	.00	.00	.00
.00	.00	.00	.00	.00	.00	.00	.00	.00	.00
.00	.00	.00	.00	.00	.00	.00	.00	.00	.00
.00	.00	.00	.00	.00	.00	.00	.00		

352 LG GREEN AND AMPT LOSS RATE

STRTL	.50	STARTING LOSS
DTH	.00	MOISTURE DEFICIT
PSIF	3.99	WETTING FRONT SUCTION
XKSAT	.64	HYDRAULIC CONDUCTIVITY
RTIMP	.00	PERCENT IMPERVIOUS AREA

353 UC CLARK UNITGRAPH

TC	.88	TIME OF CONCENTRATION
R	.61	STORAGE COEFFICIENT

354 UA ACCUMULATED-AREA VS. TIME, 11 ORDINATES

.0	1.6	5.0	10.6	19.5	32.0	44.0	56.0	70.0	82.0
100.0									

***

UNIT HYDROGRAPH PARAMETERS

```
                                        CLARK   TC=   .88 HR,       R=   .61 HR
                                        SNYDER  TP=   .91 HR,       CP=   .85

                                              UNIT HYDROGRAPH
                                          46 END-OF-PERIOD ORDINATES
              5.      19.      44.      80.     131.     188.     238.     286.     330.     373.
            404.     385.     336.     293.     256.     223.     194.     170.     148.     129.
            112.      98.      86.      75.      65.      57.      49.      43.      38.      33.
             29.      25.      22.      19.      17.      14.      13.      11.      10.       8.
              7.       6.       6.       5.       4.       4.

    ***             ***             ***             ***             ***

                          HYDROGRAPH AT STATION    IR59B

    TOTAL RAINFALL =    4.07, TOTAL LOSS =    2.84, TOTAL EXCESS =    1.23

  PEAK FLOW     TIME                              MAXIMUM AVERAGE FLOW
                                          6-HR       24-HR       72-HR      24.92-HR
+   (CFS)       (HR)
                          (CFS)
+    435.     12.67                        87.         22.         21.         21.
                        (INCHES)        1.224       1.224       1.224       1.224
                        (AC-FT)            43.         43.         43.         43.

                        CUMULATIVE AREA =     .66 SQ MI


*** *** *** *** *** *** *** *** *** *** *** *** *** *** *** *** *** *** *** *** *** *** *** *** *** *** *** *** *** *** *** *** *** *** ***


          ***************
          *             *
356 KK    *    CPHV12   *
          *             *
          ***************
                          COMBINE ROUTED FLOW FROM COMPUTATION POINT CPHV11 TO RUNOFF FROM SUB-BASIN
                          IR59B

359 HC              HYDROGRAPH COMBINATION
                         ICOMP           2  NUMBER OF HYDROGRAPHS TO COMBINE
                                                    ***
    ***             ***             ***             ***             ***

                          HYDROGRAPH AT STATION    CPHV12

  PEAK FLOW     TIME                              MAXIMUM AVERAGE FLOW
                                          6-HR       24-HR       72-HR      24.92-HR
+   (CFS)       (HR)
                          (CFS)
+    440.     12.67                       104.         41.         41.         41.
                        (INCHES)         .325        .517        .529        .529
                        (AC-FT)            51.         82.         84.         84.

                        CUMULATIVE AREA =    2.96 SQ MI


*** *** *** *** *** *** *** *** *** *** *** *** *** *** *** *** *** *** *** *** *** *** *** *** *** *** *** *** *** *** *** *** *** *** ***


          ***************
          *             *
360 KK    *    DIHV12   *
          *             *
          ***************
                          THE WESTERN EDGE OF SUB-BASIN IR59B WHICH IS ALSO THE WESTERN EDGE OF THE
                          STUDY AREA IS BOUNDED  BY A CONCRETE IRRIGATION CANAL AND EARTHEN ROADWAY
                          THE EARTHEN ROADWAY HAS A CAPACITY TO CONVEY  APPROXIMATELY 65 CFS TO THE
                          NORTH WEST BEFORE THE CONCRETE IRRIGATION CANAL IS OVERTOPPED AND FLOW
                          CONTINUES TO DRAIN TO THE WEST. THEREFORE APPROXIMATELY 65 CFS WILL
                          CONCENTRATE AT COMPUTATION POINT CPHV12. AT COMPUTATION POINT CPHV12
                          A DIP SECTION IN THE EARTHEN ROADWAY WILL DRAIN APPROXIMATELY 684 CFS
                          TO THE WEST. ALL OF THE FLOW CONCENTRATED AT COMPUTATION CPHV12 PASSES
                          OUT OF THE STUDY AREA.

    DT          DIVERSION
                     ISTAD      RCHV12  DIVERSION HYDROGRAPH IDENTIFICATION

    DI             INFLOW         .00    100.00    200.00    400.00    600.00    800.00    900.00   1000.00   1200.00   1400.00

    DQ       DIVERTED FLOW        .00    100.00    200.00    400.00    600.00    800.00    900.00   1000.00   1200.00   1400.00
                                                                 ***
    ***             ***             ***             ***             ***

                          DIVERSION HYDROGRAPH    RCHV12
```



```
  PEAK FLOW     TIME                              MAXIMUM AVERAGE FLOW
                                          6-HR       24-HR       72-HR      24.92-HR
+   (CFS)       (HR)
                          (CFS)
+    440.     12.67                       104.         41.         41.         41.
                        (INCHES)         .325        .517        .529        .529
                        (AC-FT)            51.         82.         84.         84.

                        CUMULATIVE AREA =    2.96 SQ MI


    ***             ***             ***             ***             ***

                          HYDROGRAPH AT STATION    DIHV12

  PEAK FLOW     TIME                              MAXIMUM AVERAGE FLOW
                                          6-HR       24-HR       72-HR      24.92-HR
+   (CFS)       (HR)
                          (CFS)
+      0.      .00                         0.          0.          0.          0.
                        (INCHES)         .000        .000        .000        .000
                        (AC-FT)             0.          0.          0.          0.

                        CUMULATIVE AREA =    2.96 SQ MI


*** *** *** *** *** *** *** *** *** *** *** *** *** *** *** *** *** *** *** *** *** *** *** *** *** *** *** *** *** *** *** *** *** *** ***


          ***************
          *             *
373 KK    *    REED47   *
          *             *
          ***************
                          RETRIVE DIVERTED FLOW FROM COMPUTATION POINT CPHV11

375 DR              RETRIEVE DIVERSION HYDROGRAPH
                         ISTAD      DIR55B  DIVERSION HYDROGRAPH IDENTIFICATION
                                                                    ***
    ***             ***             ***             ***             ***

                          HYDROGRAPH AT STATION    REED47

  PEAK FLOW     TIME                              MAXIMUM AVERAGE FLOW
                                          6-HR       24-HR       72-HR      24.92-HR
+   (CFS)       (HR)
                          (CFS)
+      4.     12.08                         4.          3.          3.          3.
                        (INCHES)         .014        .033        .033        .033
                        (AC-FT)             2.          5.          5.          5.

                        CUMULATIVE AREA =     .00 SQ MI


*** *** *** *** *** *** *** *** *** *** *** *** *** *** *** *** *** *** *** *** *** *** *** *** *** *** *** *** *** *** *** *** *** *** ***


          ***************
          *             *
376 KK    *    RRHV23   *
          *             *
          ***************
                          ROUTE DIVERTED FLOW FROM COMPUTATION POINT CPHV11 THROUGH SUB-BASIN IR55B

    HYDROGRAPH ROUTING DATA

378 RS        STORAGE ROUTING
                   NSTPS          19  NUMBER OF SUBREACHES
                    ITYP        ELEV  TYPE OF INITIAL CONDITION
                   RSVRIC     1061.00  INITIAL CONDITION
                       X          .00 WORKING R AND D COEFFICIENT

379 RC        NORMAL DEPTH CHANNEL
                     ANL         .070  LEFT OVERBANK N-VALUE
                    ANCH         .070  MAIN CHANNEL N-VALUE
                     ANR         .070  RIGHT OVERBANK N-VALUE
                   RLNTH        4800.  REACH LENGTH
                     SEL        .0060  ENERGY SLOPE
                   ELMAX           .0  MAX. ELEV. FOR STORAGE/OUTFLOW CALCULATION

                                  CROSS-SECTION DATA
                          --- LEFT OVERBANK --- + ------ MAIN CHANNEL ------- + --- RIGHT OVERBANK ---
381 RY        ELEVATION  1062.00   1061.00   1061.00   1061.00   1061.00   1061.00   1061.00   1062.00
380 RX        DISTANCE       .00    240.00    470.00    620.00    830.00   1200.00   1520.00   1740.00
                                                  ***
                                  COMPUTED STORAGE-OUTFLOW-ELEVATION DATA

              STORAGE        .00      7.49     15.12     22.89     30.81     38.86     47.05     55.38     63.86     72.47
```

```
          OUTFLOW        .00     15.64     49.83     98.30    159.38    232.08    315.76    409.95    514.30    628.55
        ELEVATION    1061.00   1061.05   1061.11   1061.16   1061.21   1061.26   1061.32   1061.37   1061.42   1061.47

          STORAGE      81.22     90.12     99.15    108.33    117.64    127.10    136.69    146.43    156.30    166.32
          OUTFLOW     752.48    885.93   1028.78   1180.92   1342.26   1512.76   1692.34   1880.99   2078.66   2285.34
        ELEVATION    1061.53   1061.58   1061.63   1061.68   1061.74   1061.79   1061.84   1061.89   1061.95   1062.00

 *** WARNING *** MODIFIED PULS ROUTING MAY BE NUMERICALLY UNSTABLE FOR OUTFLOWS BETWEEN      886. TO      2285.
                 THE ROUTED HYDROGRAPH SHOULD BE EXAMINED FOR OSCILLATIONS OR OUTFLOWS GREATER THAN PEAK INFLOWS.
                 THIS CAN BE CORRECTED BY DECREASING THE TIME INTERVAL OR INCREASING STORAGE (USE A LONGER REACH.)

       ***             ***             ***             ***             ***

                           HYDROGRAPH AT STATION    RRHV23

  PEAK FLOW      TIME                             MAXIMUM AVERAGE FLOW
                                        6-HR         24-HR        72-HR      24.92-HR
 +   (CFS)       (HR)
                              (CFS)
 +        4.     23.25                    4.            2.           2.            2.
                           (INCHES)     .000          .000         .000          .000
                            (AC-FT)       2.            3.           3.            3.

 PEAK STORAGE    TIME                            MAXIMUM AVERAGE STORAGE
                                        6-HR         24-HR        72-HR      24.92-HR
 +  (AC-FT)      (HR)
          0.     22.50                    0.            0.           0.            0.

  PEAK STAGE     TIME                             MAXIMUM AVERAGE STAGE
                                        6-HR         24-HR        72-HR      24.92-HR
 +   (FEET)      (HR)
    1061.01      21.67              1061.02       1061.00      1061.00       1061.00

                          CUMULATIVE AREA =       .00 SQ MI


*** *** *** *** *** *** *** *** *** *** *** *** *** *** *** *** *** *** *** *** *** *** *** *** *** *** *** *** *** *** *** *** ***


               **************
               *            *
 382 KK        *   IR55B    *
               *            *
               **************
                               SUB-BASIN IR55B -LAND USE - AGRICULTURE;MINOR DEVELOPMENT
                               24-HOUR TYPE II RAINFALL WAS USED TO FIND TC & R FOR THIS BASIN
                               THIS BASIN USED RAINFALL REDUCTION FACTOR OF .97

                 SUBBASIN RUNOFF DATA

 386 BA            SUBBASIN CHARACTERISTICS
                        TAREA          .53  SUBBASIN AREA

                   PRECIPITATION DATA

  16 PB                 STORM         4.07  BASIN TOTAL PRECIPITATION

  16 PI               INCREMENTAL PRECIPITATION PATTERN
                         .00      .00      .00      .00      .00      .00      .00      .00      .00      .00
                         .00      .00      .00      .00      .00      .00      .00      .00      .00      .00
                         .00      .00      .00      .00      .00      .00      .00      .00      .00      .00
                         .00      .00      .00      .00      .00      .00      .00      .00      .00      .00
                         .00      .00      .00      .00      .00      .00      .00      .00      .00      .00
                         .00      .00      .00      .00      .00      .00      .00      .00      .00      .00
                         .00      .00      .00      .00      .00      .00      .00      .00      .00      .00
                         .00      .00      .00      .00      .00      .00      .00      .00      .00      .00
                         .00      .00      .00      .00      .00      .00      .00      .00      .00      .00
                         .00      .00      .00      .00      .00      .00      .00      .00      .00      .00
                         .00      .00      .00      .00      .00      .00      .00      .00      .00      .00
                         .00      .00      .00      .00      .00      .00      .00      .00      .00      .00
                         .00      .00      .00      .00      .00      .00      .01      .01      .01      .01
                         .01      .01      .01      .01      .01      .01      .01      .01      .06      .06
                         .06      .06      .06      .06      .01      .01      .01      .01      .01      .01
                         .01      .01      .01      .01      .01      .01      .00      .00      .00      .00
                         .00      .00      .00      .00      .00      .00      .00      .00      .00      .00
                         .00      .00      .00      .00      .00      .00      .00      .00      .00      .00
                         .00      .00      .00      .00      .00      .00      .00      .00      .00      .00
                         .00      .00      .00      .00      .00      .00      .00      .00      .00      .00
                         .00      .00      .00      .00      .00      .00      .00      .00      .00      .00
                         .00      .00      .00      .00      .00      .00      .00      .00      .00      .00
                         .00      .00      .00      .00      .00      .00      .00      .00      .00      .00
                         .00      .00      .00      .00      .00      .00      .00      .00      .00      .00
                         .00      .00      .00      .00      .00      .00      .00      .00      .00      .00
                         .00      .00      .00      .00      .00      .00      .00      .00      .00      .00
                         .00      .00      .00      .00      .00      .00      .00      .00      .00      .00
                         .00      .00      .00      .00      .00      .00      .00      .00      .00      .00
                         .00      .00      .00      .00      .00      .00      .00      .00

 387 LG            GREEN AND AMPT LOSS RATE
                        STRTL          .48  STARTING LOSS
                          DTH          .08  MOISTURE DEFICIT
                         PSIF         3.65  WETTING FRONT SUCTION
                        XKSAT          .50  HYDRAULIC CONDUCTIVITY
```



```
                        RTIMP         5.00  PERCENT IMPERVIOUS AREA

 388 UC            CLARK UNITGRAPH
                           TC          .85  TIME OF CONCENTRATION
                            R          .55  STORAGE COEFFICIENT

 389 UA            ACCUMULATED-AREA VS. TIME,  11 ORDINATES
                         .0       3.0       5.0       8.0      12.0      20.0      43.0      75.0      90.0      96.0
                      100.0

                                                        ***

                                           UNIT HYDROGRAPH PARAMETERS
                                      CLARK   TC=   .85 HR,       R=   .55 HR
                                     SNYDER   TP=   .71 HR,      CP=   .80

                                                 UNIT HYDROGRAPH
                                            42 END-OF-PERIOD ORDINATES
                   8.        21.        32.        47.        73.       145.       272.       370.       388.       367.
                 330.       286.       246.       212.       182.       157.       135.       116.       100.        86.
                  74.        63.        55.        47.        40.        35.        30.        26.        22.        19.
                  16.        14.        12.        10.         9.         8.         7.         6.         5.         4.
                   4.         3.

       ***             ***             ***             ***             ***

                           HYDROGRAPH AT STATION    IR55B

      TOTAL RAINFALL =     4.07, TOTAL LOSS =     2.72, TOTAL EXCESS =     1.35

  PEAK FLOW      TIME                             MAXIMUM AVERAGE FLOW
                                        6-HR         24-HR        72-HR      24.92-HR
 +   (CFS)       (HR)
                              (CFS)
 +      415.     12.50                   73.           19.          18.           18.
                           (INCHES)    1.287         1.346        1.347         1.347
                            (AC-FT)      36.           38.          38.           38.

                          CUMULATIVE AREA =       .53 SQ MI


*** *** *** *** *** *** *** *** *** *** *** *** *** *** *** *** *** *** *** *** *** *** *** *** *** *** *** *** *** *** *** *** ***


               **************
               *            *
 391 KK        *   CIR55B   *
               *            *
               **************
                               COMBINE ROUTED DIVERTED FLOW FROM COMPUTATION POINT CPHV11 WITH RUNOFF FROM
                               SUB-BASIN IR55B

 394 HC            HYDROGRAPH COMBINATION
                        ICOMP            2  NUMBER OF HYDROGRAPHS TO COMBINE

                                                        ***

       ***             ***             ***             ***             ***

                           HYDROGRAPH AT STATION    CIR55B

  PEAK FLOW      TIME                             MAXIMUM AVERAGE FLOW
                                        6-HR         24-HR        72-HR      24.92-HR
 +   (CFS)       (HR)
                              (CFS)
 +      416.     12.50                   74.           21.          20.           20.
                           (INCHES)    1.303         1.457        1.457         1.457
                            (AC-FT)      37.           41.          41.           41.

                          CUMULATIVE AREA =       .53 SQ MI


*** *** *** *** *** *** *** *** *** *** *** *** *** *** *** *** *** *** *** *** *** *** *** *** *** *** *** *** *** *** *** *** ***


               **************
               *            *
 395 KK        *   DIR55B   *
               *            *
               **************
                               THE WESTERN EDGE OF SUB-BASIN IR55B WHICH IS ALSO THE WESTERN EDGE OF THE
                               STUDY AREA IS BOUNDED BY AN EARTHEN IRRIGATION CANAL. MINOR CONTAINMENT OF
                               RUNOFF AND ROUTED FLOW WILL BE REALIZED. THEREFORE TOTAL FLOW AT COMPUTATION
                               POINT CIR55B IS DIVERTED BECAUSE FLOW FROM THIS POINT DOES NOT CONTRIBUTE
                               TO RUNOFF COMPUTATIONS DOWNSTREAM.

   DT              DIVERSION
                        ISTAD       RCIREB  DIVERSION HYDROGRAPH IDENTIFICATION

   DI                  INFLOW          .00    100.00    200.00    400.00    600.00    800.00

   DQ           DIVERTED FLOW          .00    100.00    200.00    400.00    600.00    800.00
```

***

*** *** *** *** ***

DIVERSION HYDROGRAPH RCIREB

PEAK FLOW	TIME		MAXIMUM AVERAGE FLOW			
			6-HR	24-HR	72-HR	24.92-HR
(CFS)	(HR)					
		(CFS)				
416.	12.50		74.	21.	20.	20.
		(INCHES)	1.303	1.457	1.457	1.457
		(AC-FT)	37.	41.	41.	41.

CUMULATIVE AREA = .53 SQ MI

*** *** *** *** ***

HYDROGRAPH AT STATION DIR55B

PEAK FLOW	TIME		MAXIMUM AVERAGE FLOW			
			6-HR	24-HR	72-HR	24.92-HR
(CFS)	(HR)					
		(CFS)				
0.	.00		0.	0.	0.	0.
		(INCHES)	.000	.000	.000	.000
		(AC-FT)	0.	0.	0.	0.

CUMULATIVE AREA = .53 SQ MI

1

RUNOFF SUMMARY
FLOW IN CUBIC FEET PER SECOND
TIME IN HOURS, AREA IN SQUARE MILES

	OPERATION	STATION	PEAK FLOW	TIME OF PEAK	AVERAGE FLOW FOR MAXIMUM PERIOD 6-HOUR	24-HOUR	72-HOUR	BASIN AREA	MAXIMUM STAGE	TIME OF MAX STAGE
+	HYDROGRAPH AT	WC16B	33.	12.08	4.	1.	1.	.02		
+	ROUTED TO	RRHV1	32.	12.17	4.	1.	1.	.02		
+									1141.45	12.17
+	HYDROGRAPH AT	WC17B	35.	12.17	5.	1.	1.	.04		
+	ROUTED TO	RRHV2	35.	12.17	5.	1.	1.	.04		
+									1140.32	12.17
+	2 COMBINED AT	CPHV1	67.	12.17	9.	2.	2.	.06		
+	ROUTED TO	RRHV3	66.	12.17	9.	2.	2.	.06		
+									1137.82	12.17
+	ROUTED TO	RRHV4	65.	12.25	9.	2.	2.	.06		
+									1141.72	12.25
+	HYDROGRAPH AT	WC18B	72.	12.17	9.	2.	2.	.06		
+	ROUTED TO	RRHV5	71.	12.17	9.	2.	2.	.06		
+									1136.73	12.17
+	HYDROGRAPH AT	WC19B	350.	12.08	44.	14.	13.	.21		
+	ROUTED TO	RRHV6	349.	12.08	44.	14.	13.	.21		
+									1138.57	12.08
+	HYDROGRAPH AT	PM3B	46.	12.17	5.	1.	1.	.06		
+	4 COMBINED AT	CPHV2	516.	12.08	67.	20.	19.	.39		
+	ROUTED TO	RRHV7	508.	12.17	67.	20.	19.	.39		
+									1127.74	12.17
+	HYDROGRAPH AT	WC20B	21.	12.08	3.	1.	1.	.01		
+	ROUTED TO	RRHV8	21.	12.17	3.	1.	1.	.01		
+									1132.45	12.17
+	2 COMBINED AT	CPHV3	528.	12.17	70.	20.	20.	.40		
+	ROUTED TO	RRHV9	523.	12.17	70.	20.	20.	.40		
+									1123.09	12.17
+	HYDROGRAPH AT	WC21B	27.	12.17	4.	1.	1.	.02		
+	ROUTED TO	RRHV10	26.	12.25	4.	1.	1.	.02		
+									1129.29	12.25
+	HYDROGRAPH AT	PM4B	151.	12.08	17.	5.	5.	.14		
+	3 COMBINED AT	CPHV4	695.	12.17	91.	26.	25.	.57		
+	ROUTED TO	RRHV11	692.	12.17	91.	26.	25.	.57		
+									1118.75	12.17
+	HYDROGRAPH AT	WC22B	9.	12.08	1.	0.	0.	.01		
+	ROUTED TO	RRHV12	9.	12.25	1.	0.	0.	.01		
+									1123.62	12.25

+	2 COMBINED AT	CPHV5	700.	12.17	92.	26.	25.	.57	
+	ROUTED TO	RRHV13	686.	12.17	92.	26.	25.	.57	
+									1115.86 12.17
+	HYDROGRAPH AT	WC23B	604.	12.17	97.	32.	31.	.40	
+	ROUTED TO	RRHV14	604.	12.17	97.	32.	31.	.40	
+									1121.74 12.17
+	2 COMBINED AT	CPHV6	1290.	12.17	189.	58.	56.	.97	
+	ROUTED TO	RRHV15	1217.	12.25	188.	58.	56.	.97	
+									1106.76 12.25
+	HYDROGRAPH AT	PM5B	134.	12.25	18.	5.	5.	.13	
+	2 COMBINED AT	CPHV7	1351.	12.25	207.	63.	61.	1.10	
+	ROUTED TO	RRHV16	1345.	12.33	207.	63.	61.	1.10	
+									1098.72 12.33
+	HYDROGRAPH AT	A43A2B	127.	12.17	18.	5.	5.	.09	
+	ROUTED TO	RRHV17	123.	12.17	18.	5.	5.	.09	
+									1099.44 12.17
+	2 COMBINED AT	CPHV8	1450.	12.33	224.	69.	66.	1.19	
+	ROUTED TO	RRHV18	1325.	12.50	224.	68.	65.	1.19	
+									1087.18 12.50
+	HYDROGRAPH AT	NWSM1B	168.	12.08	28.	9.	9.	.13	
+	ROUTED TO	RR43B1	166.	12.17	28.	9.	9.	.13	
+									1168.55 12.17
+	ROUTED TO	RR43B2	161.	12.17	28.	9.	9.	.13	
+									1118.16 12.17
+	HYDROGRAPH AT	A43A1B	235.	12.08	25.	7.	7.	.17	
+	2 COMBINED AT	CPHV9	382.	12.08	52.	16.	16.	.30	
+	ROUTED TO	RRHV19	348.	12.33	52.	16.	16.	.30	
+									1091.34 12.33
+	2 COMBINED AT	CPHV10	1622.	12.50	276.	84.	81.	1.49	
+	ROUTED TO	RRHV20	1540.	12.58	276.	84.	81.	1.49	
+									1076.16 12.58
+	HYDROGRAPH AT	ED47B	1159.	12.08	112.	31.	30.	.81	
+	2 COMBINED AT	CPHV11	1601.	12.58	388.	115.	110.	2.30	
+	ROUTED TO	BASN11	30.	12.08	30.	18.	17.	2.30	
+									7.78 19.42
+	DIVERSION TO	DIR55B	4.	12.08	4.	3.	3.	2.30	
+	HYDROGRAPH AT	DFED47	26.	12.08	26.	16.	15.	2.30	
+	ROUTED TO	RRHV21	26.	16.17	26.	14.	13.	2.30	
+									1059.63 14.67
+	ROUTED TO	RRHV22	199.	.08	33.	19.	20.	2.30	
+									1039.60 .08

+	HYDROGRAPH AT	IR59B	435.	12.67	87.	22.	21.	.66	
+	2 COMBINED AT	CPHV12	440.	12.67	104.	41.	41.	2.96	
+	DIVERSION TO	RCHV12	440.	.00	104.	41.	41.	2.96	
+	HYDROGRAPH AT	DIHV12	0.	.00	0.	0.	0.	2.96	
+	HYDROGRAPH AT	REED47	4.	12.08	4.	3.	3.	.00	
+	ROUTED TO	RRHV23	4.	23.25	4.	2.	2.	.00	
+									1061.01 21.67
+	HYDROGRAPH AT	IR55B	415.	12.50	73.	19.	18.	.53	
+	2 COMBINED AT	CIR55B	416.	12.50	74.	21.	20.	.53	
+	DIVERSION TO	RCIREB	416.	.00	74.	21.	20.	.53	
+	HYDROGRAPH AT	DIR55B	0.	.00	0.	0.	0.	.53	

*** NORMAL END OF HEC-1 ***

Alt 2a

Western Canal Channel (West)
Worksheet for Trapezoidal Channel

Project Description	
Worksheet	Alt 2A Western Canal Channe
Flow Element	Trapezoidal Channel
Method	Manning's Formula
Solve For	Channel Depth

Input Data		
Mannings Coeffic	0.035	
Slope	002000	ft/ft
Left Side Slope	5.00	H : V
Right Side Slope	5.00	H : V
Bottom Width	10.00	ft
Discharge	777.00	cfs

Results		
Depth	5.33	ft
Flow Area	195.2	ft²
Wetted Perime	64.34	ft
Top Width	63.28	ft
Critical Depth	3.45	ft
Critical Slope	0.014192	ft/ft
Velocity	3.98	ft/s
Velocity Head	0.25	ft
Specific Energ	5.57	ft
Froude Numb	0.40	
Flow Type	Subcritical	

Western Canal Channel (East)
Cross Section for Trapezoidal Channel

Project Description	
Worksheet	Alt 2A Western Canal Channe
Flow Element	Trapezoidal Channel
Method	Manning's Formula
Solve For	Channel Depth

Section Data		
Mannings Coeffic	0.035	
Slope	002000	ft/ft
Depth	5.33	ft
Left Side Slope	5.00	H : V
Right Side Slope	5.00	H : V
Bottom Width	10.00	ft
Discharge	777.00	cfs

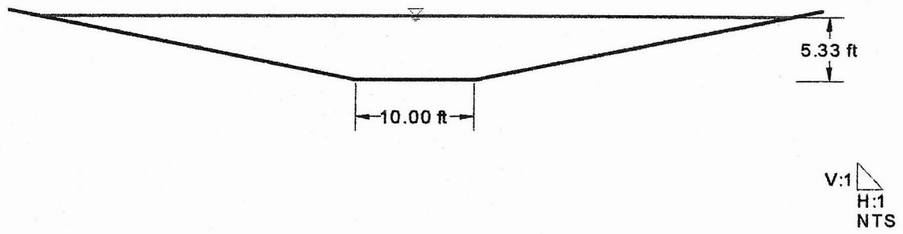

Western Canal Channel East
Worksheet for Trapezoidal Channel

Project Description	
Worksheet	Alt 2A - Western Canal Channe
Flow Element	Trapezoidal Channel
Method	Manning's Formula
Solve For	Discharge

Input Data		
Mannings Coeffic	0.035	
Slope	002000	ft/ft
Depth	4.00	ft
Left Side Slope	4.00	H : V
Right Side Slope	4.00	H : V
Bottom Width	8.00	ft

Results		
Discharge	321.47	cfs
Flow Area	96.0	ft²
Wetted Perim	40.98	ft
Top Width	40.00	ft
Critical Depth	2.49	ft
Critical Slope	0.015702	ft/ft
Velocity	3.35	ft/s
Velocity Head	0.17	ft
Specific Energ	4.17	ft
Froude Numb	0.38	
Flow Type	Subcritical	

Western Canal Channel (East)
Cross Section for Trapezoidal Channel

Project Description	
Worksheet	Alt 2A - Western Canal Channe
Flow Element	Trapezoidal Channel
Method	Manning's Formula
Solve For	Discharge

Section Data		
Mannings Coeffic	0.035	
Slope	002000	ft/ft
Depth	4.00	ft
Left Side Slope	4.00	H : V
Right Side Slope	4.00	H : V
Bottom Width	8.00	ft
Discharge	321.47	cfs

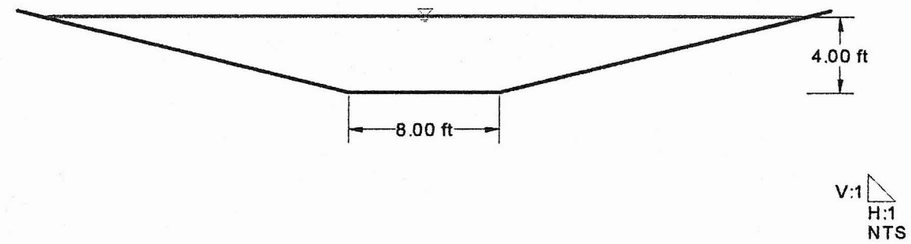

Pipline Connection to Laveen Conveyance Channel
Worksheet for Circular Channel

Project Description	
Worksheet	Alt 2A Connection to
Flow Element	Circular Channel
Method	Manning's Formula
Solve For	Channel Depth

Input Data		
Mannings Coeffic	0.013	
Slope	003000	ft/ft
Diameter	48	in
Discharge	50.00	cfs

Results		
Depth	2.32	ft
Flow Area	7.5	ft²
Wetted Perime	6.92	ft
Top Width	3.95	ft
Critical Depth	2.12	ft
Percent Full	57.9	%
Critical Slope	0.003977	ft/ft
Velocity	6.63	ft/s
Velocity Head	0.68	ft
Specific Energ	3.00	ft
Froude Numbe	0.85	
Maximum Disc	84.63	cfs
Discharge Full	78.67	cfs
Slope Full	0.001212	ft/ft
Flow Type	Subcritical	

Pipeline Connection To Laveen Conveyance Channel
Cross Section for Circular Channel

Project Description	
Worksheet	Alt 2A Connection to
Flow Element	Circular Channel
Method	Manning's Formula
Solve For	Channel Depth

Section Data		
Mannings Coeffic	0.013	
Slope	003000	ft/ft
Depth	2.32	ft
Diameter	48	in
Discharge	50.00	cfs

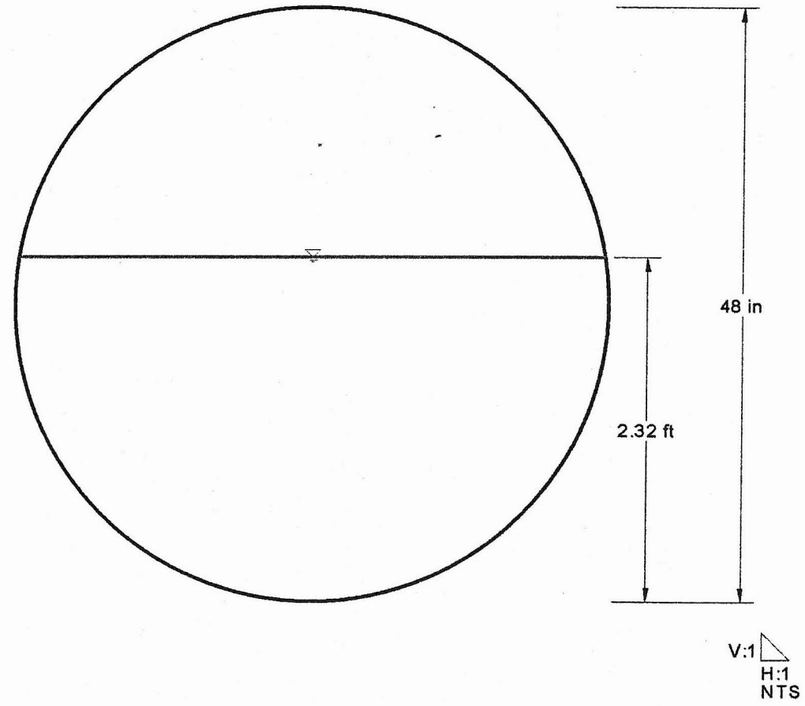

51st Avenue Channel (North of Dobbins)
Worksheet for Irregular Channel

Project Description	
Worksheet	Alt 2A - 51st Ave. Channel (North of D
Flow Element	Irregular Channel
Method	Manning's Formula
Solve For	Channel Depth

Input Data		
Slope	002100	ft/ft
Discharg	60.00	cfs

Options	
Current Roughness Metho	ved Lotter's Method
Open Channel Weighting I	ved Lotter's Method
Closed Channel Weighting	Horton's Method

Results		
Mannings Coefficier	0.035	
Water Surface Elev	1,008.93	ft
Elevation Range	07.00 to 1,013.00	
Flow Area	28.2	ft²
Wetted Perimeter	24.65	ft
Top Width	24.27	ft
Actual Depth	1.93	ft
Critical Elevation	1,008.14	ft
Critical Slope	0.020049	ft/ft
Velocity	2.13	ft/s
Velocity Head	0.07	ft
Specific Energy	1,009.00	ft
Froude Number	0.35	
Flow Type	Subcritical	

Roughness Segments		
Start Station	End Station	Mannings Coefficient
0+00	1+53	0.035

Natural Channel Points	
Station (ft)	Elevation (ft)
0+00	1,013.00
0+40	1,012.00
0+54	1,011.00
0+74	1,007.00
0+79	1,007.00
0+99	1,011.00
1+33	1,012.00
1+53	1,013.00

51st Avenue Channel (North of Dobbins)
Cross Section for Irregular Channel

Project Description	
Worksheet	Alt 2A - 51st Ave. Channel (North of D
Flow Element	Irregular Channel
Method	Manning's Formula
Solve For	Channel Depth

Section Data		
Mannings Coefficier	0.035	
Slope	0.002100	ft/ft
Water Surface Elev	1,008.93	ft
Elevation Range	07.00 to 1,013.00	
Discharge	60.00	cfs

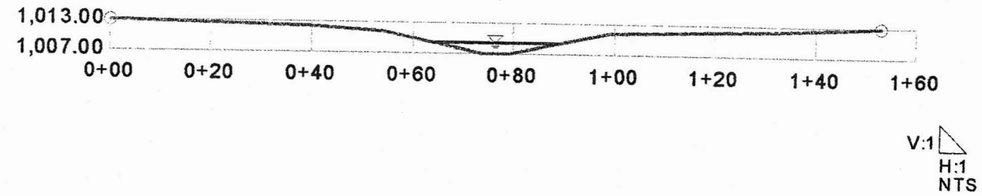

51st Avenue Channel (North of South Mt. Ave.)
Worksheet for Irregular Channel

Project Description	
Worksheet	Alt 2A - 51st Ave. Channel (North of South
Flow Element	Irregular Channel
Method	Manning's Formula
Solve For	Channel Depth

Input Data		
Slope	002100	ft/ft
Dischargı	248.00	cfs

Options	
Current Roughness Methc	oved Lotter's Method
Open Channel Weighting I	oved Lotter's Method
Closed Channel Weighting	Horton's Method

Results		
Mannings Coefficier	0.035	
Water Surface Elev	1,009.56	ft
Elevation Range	06.00 to 1,013.00	
Flow Area	81.2	ft²
Wetted Perimeter	41.32	ft
Top Width	40.62	ft
Actual Depth	3.56	ft
Critical Elevation	1,008.29	ft
Critical Slope	0.016504	ft/ft
Velocity	3.05	ft/s
Velocity Head	0.14	ft
Specific Energy	1,009.71	ft
Froude Number	0.38	
Flow Type	Subcritical	

Roughness Segments

Start Station	End Station	Mannings Coefficient
0+00	1+53	0.035

Natural Channel Points

Station (ft)	Elevation (ft)
0+00	1,013.00
0+40	1,012.00
0+49	1,011.00
0+74	1,006.00
0+79	1,006.00
1+04	1,011.00
1+33	1,012.00
1+53	1,013.00

51st Avenue Channel (North of South Mt. Ave.)
Cross Section for Irregular Channel

Project Description	
Worksheet	Alt 2A - 51st Ave. Channel (North of South
Flow Element	Irregular Channel
Method	Manning's Formula
Solve For	Channel Depth

Section Data		
Mannings Coefficier	0.035	
Slope	0.002100	ft/ft
Water Surface Elev	1,009.56	ft
Elevation Range	06.00 to 1,013.00	
Discharge	248.00	cfs

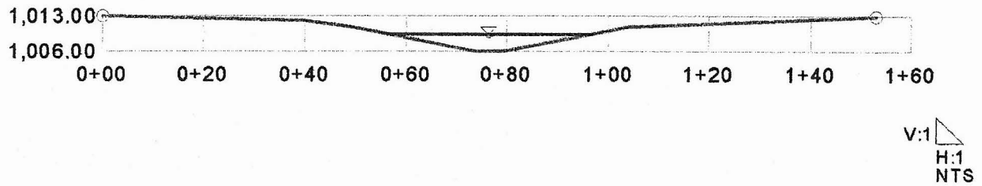

51st Avneue Channel (South of Dobbins)
Worksheet for Irregular Channel

Project Description	
Worksheet	Alt 2A - 51st Ave. Channel (South of I
Flow Element	Irregular Channel
Method	Manning's Formula
Solve For	Channel Depth

Input Data		
Slope	002100	ft/ft
Discharge	20.00	cfs

Options	
Current Roughness Metho	oved Lotter's Method
Open Channel Weighting I	oved Lotter's Method
Closed Channel Weighting	Horton's Method

Results		
Mannings Coefficier	0.035	
Water Surface Elev	1,009.16	ft
Elevation Range	08.00 to 1,013.00	
Flow Area	12.5	ft²
Wetted Perimeter	16.82	ft
Top Width	16.59	ft
Actual Depth	1.16	ft
Critical Elevation	1,008.64	ft
Critical Slope	0.023496	ft/ft
Velocity	1.60	ft/s
Velocity Head	0.04	ft
Specific Energy	1,009.20	ft
Froude Number	0.32	
Flow Type	Subcritical	

Roughness Segments		
Start Station	End Station	Mannings Coefficient
0+00	1+53	0.035

Natural Channel Points	
Station (ft)	Elevation (ft)
0+00	1,013.00
0+40	1,012.00
0+59	1,011.00
0+74	1,008.00
0+79	1,008.00
0+94	1,011.00
1+33	1,012.00
1+53	1,013.00

51st Avenue Channel (South of Dobbins)
Cross Section for Irregular Channel

Project Description	
Worksheet	Alt 2A - 51st Ave. Channel (South of I
Flow Element	Irregular Channel
Method	Manning's Formula
Solve For	Channel Depth

Section Data		
Mannings Coefficier	0.035	
Slope	0.002100	ft/ft
Water Surface Elev	1,009.16	ft
Elevation Range	08.00 to 1,013.00	
Discharge	20.00	cfs

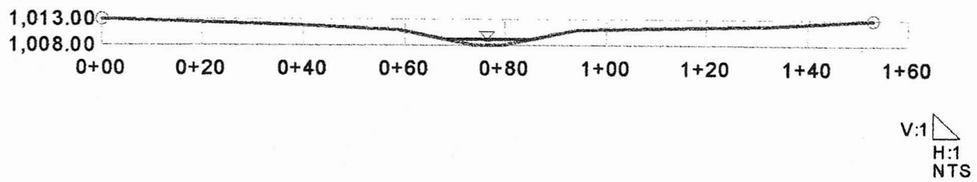

Dobbins Road Channel
Worksheet for Irregular Channel

Project Description	
Worksheet	Alt 2A - Dobbins Road C
Flow Element	Irregular Channel
Method	Manning's Formula
Solve For	Channel Depth

Input Data		
Slope	004200	ft/ft
Discharge	20.00	cfs

Options	
Current Roughness Method	Lotter's Method
Open Channel Weighting	Lotter's Method
Closed Channel Weighting	Horton's Method

Results		
Mannings Coefficient	0.035	
Water Surface Elev	1,020.98	ft
Elevation Range	20.00 to 1,025.00	
Flow Area	9.7	ft²
Wetted Perimeter	15.00	ft
Top Width	14.81	ft
Actual Depth	0.98	ft
Critical Elevation	1,020.64	ft
Critical Slope	0.023496	ft/ft
Velocity	2.06	ft/s
Velocity Head	0.07	ft
Specific Energy	1,021.05	ft
Froude Number	0.45	
Flow Type	Subcritical	

Roughness Segments

Start Station	End Station	Mannings Coefficient
0+00	1+53	0.035

Natural Channel Points

Station (ft)	Elevation (ft)
0+00	1,025.00
0+40	1,024.00
0+59	1,023.00
0+74	1,020.00
0+79	1,020.00
0+94	1,023.00
1+33	1,024.00
1+53	1,025.00

Dobbins Road Channel
Cross Section for Irregular Channel

Project Description	
Worksheet	Alt 2A - Dobbins Road C
Flow Element	Irregular Channel
Method	Manning's Formula
Solve For	Channel Depth

Section Data		
Mannings Coefficient	0.035	
Slope	0.004200	ft/ft
Water Surface Elev	1,020.98	ft
Elevation Range	20.00 to 1,025.00	
Discharge	20.00	cfs

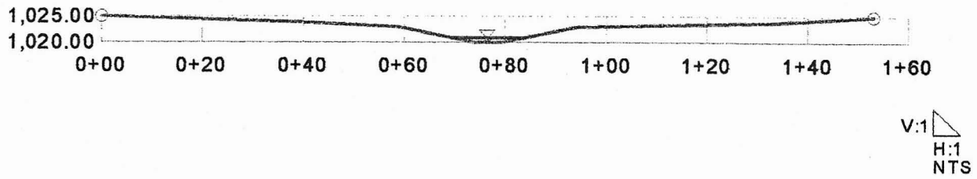

```
1*************************************
 *                                   *
 *   FLOOD HYDROGRAPH PACKAGE  (HEC-1)   *
 *             JUN  1998             *
 *          VERSION 4.1              *
 *                                   *
 *  RUN DATE   27JUN01  TIME  11:45:42   *
 *                                   *
 *************************************
```

```
*************************************
*                                   *
*    U.S. ARMY CORPS OF ENGINEERS   *
*    HYDROLOGIC ENGINEERING CENTER  *
*          609 SECOND STREET        *
*        DAVIS, CALIFORNIA 95616    *
*           (916) 756-1104          *
*                                   *
*************************************
```

```
X     X  XXXXXXX   XXXXX          X
X     X  X        X     X        XX
X     X  X        X              X
XXXXXXX  XXXX     X        XXXXX  X
X     X  X        X              X
X     X  X        X     X        X
X     X  XXXXXXX   XXXXX         XXX
```

THIS PROGRAM REPLACES ALL PREVIOUS VERSIONS OF HEC-1 KNOWN AS HEC1 (JAN 73), HEC1GS, HEC1DB, AND HEC1KW.

THE DEFINITIONS OF VARIABLES -RTIMP- AND -RTIOR- HAVE CHANGED FROM THOSE USED WITH THE 1973-STYLE INPUT STRUCTURE.
THE DEFINITION OF -AMSKK- ON RM-CARD WAS CHANGED WITH REVISIONS DATED 28 SEP 81. THIS IS THE FORTRAN77 VERSION
NEW OPTIONS: DAMBREAK OUTFLOW SUBMERGENCE , SINGLE EVENT DAMAGE CALCULATION, DSS:WRITE STAGE FREQUENCY,
DSS:READ TIME SERIES AT DESIRED CALCULATION INTERVAL LOSS RATE:GREEN AND AMPT INFILTRATION
KINEMATIC WAVE: NEW FINITE DIFFERENCE ALGORITHM

1 HEC-1 INPUT PAGE 1

```
LINE          ID.....1.....2.....3.....4.....5.....6.....7.....8.....9.....10
   1          ID    FILENAME LAVALT2A.DAT
   2          ID    LAVEEN ADMP ALTERNATIVE MODEL FOR ALTERNATIVE 2
   3          ID    MAY 2001
   4          ID    MODIFIED BY PROJECT ENGINEERING CONSULTANTS, LTD.
   5          ID
   6          ID
   7          ID
   8          ID    LAVEEN ADMS (FINAL HEC-1) 100-YR 24-HR STORM          CBA FILE # 40916-02-30
   9          ID    HIDDEN VALLEY WATERSHED/CHAMPION DRAIN WATERSHED
  10          ID     INPUT FILE NAME  LAVFUT1A                    DATE: SEPT. 27,2000
  11          ID     24-HOUR SCS TYPE II
  12          ID    80% RETENTION VOLUME OF FUTURE RETENTION
  13          ID
  14          ID    RELAXED RETENTION 1/2 MILE OF MARICOPA DRAIN
  15          ID    MINUS FIRST FLUSH OF 5YR 24HR VOLUME
  16          ID
  17          ID    MULTIPLAN FOR ROUTING WITHIN THE CHAMPION DRAIN
  18          ID      PLAN 2: CHANNEL, S=.0020 ft/ft, n=.031, BW=14', SS=6:1, D=10', TW=124'
  19          ID
  20          ID    DDM MCUHP1 LAVEEN REVISED HYDROLOGY - FUTURE LANDUSE CONDITIONS
              *DIAGRAM
  21          IT       5                    300
  22          IO       3       0
              * DDM   ***** Updated *****
  23          KK    VR47C
  24          KM    SUB-BASIN VR47C
  25          KM    24-HOUR SCS TYPE II RAINFALL WAS USED TO FIND TC & R FOR THIS BASIN
  26          KM    THIS BASIN USED RAINFALL REDUCTION FACTOR OF  .934
  27          KM      L = 1.65  Kb = .042  Adj. Slope =    7.0
  28          BA    .869
  29          IN      15
  30          KM    RAINFALL DEPTH OF 4.20 WAS SPACIALLY REDUCED AS SHOWN BY THE PB RECORD
  31          PB    3.923
  32          KM    THE FOLLOWING PC RECORD USED A 24-HR SCS TYPE II STORM
  33          PC    .000    .002    .005    .008    .011    .014    .017    .020    .023    .026
  34          PC    .029    .032    .035    .038    .041    .044    .048    .052    .056    .060
  35          PC    .064    .068    .072    .076    .080    .085    .090    .095    .100    .105
  36          PC    .110    .115    .120    .126    .133    .140    .147    .155    .163    .172
  37          PC    .181    .191    .203    .218    .236    .257    .283    .387    .663    .707
  38          PC    .735    .758    .776    .791    .804    .815    .825    .834    .842    .849
  39          PC    .856    .863    .869    .875    .881    .887    .893    .898    .903    .908
  40          PC    .913    .918    .922    .926    .930    .934    .938    .942    .946    .950
  41          PC    .953    .956    .959    .962    .965    .968    .971    .974    .977    .980
  42          PC    .983    .986    .989    .992    .995    .998   1.000
  43          LG    .260    .250   5.700    .250  27.000
  44          UC   1.500    .938
  45          UA       0       5      16      30      65      77      84      90      94      97
  46          UA     100
              *
              * DDM   ***** Preserved *****
```

1 HEC-1 INPUT PAGE 2

```
LINE          ID.....1.....2.....3.....4.....5.....6.....7.....8.....9.....10
  47          KK    VR47R
  48          KM    DIVERT RETENTION VOLUME
```



```
  49          KM    RELAXED RETENTION VOLUME FROM 72.8 AC-FT
  50          DT  RET47C    67.7
  51          DI       0    1000   10000
  52          DQ       0    1000   10000
              *
              * DDM   ***** Preserved *****
  53          KK  RBR511
  54          KM    ROUTE FLOW FROM COMPUTATION POINT CVR47C TO COMPUTATION POINT CB51C
  55          KM    MARICOPA DRAIN - 47TH AVE. TO 51ST AVE.
  56          RS       2    ELEV      -1
  57          RC    .030    .030    .030    3200   .0011
  58          RX       0      10      20      45     115     140     150     160
  59          RY  1008.2  1008.1    1008    1003    1003    1008  1008.1  1008.2
              *
              * DDM   ***** Updated *****
  60          KK  AVR51C
  61          KM    SUB-BASIN AVR51C
  62          KM    24-HOUR SCS TYPE II RAINFALL WAS USED TO FIND TC & R FOR THIS BASIN
  63          KM    THIS BASIN USED RAINFALL REDUCTION FACTOR OF  .934
  64          KM      L =  .86  Kb = .049  Adj. Slope =   10.0
  65          BA    .285
  66          LG    .250    .190   6.600    .170  30.000
  67          UC    .829    .545
  68          UA       0       5      16      30      65      77      84      90      94      97
  69          UA     100
              *
              * DDM   ***** Preserved *****
  70          KK  AVR51R
  71          KM    DIVERT RETENTION VOLUME
  72          DT  RET51C    21.6
  73          DI       0    1000   10000
  74          DQ       0    1000   10000
              *
              * DDM   ***** Preserved *****
  75          KK  RBR512
  76          KM    ROUTE FLOW FROM SUB-BASIN AVR51C TO COMPUTATION POINT CB51C
  77          KM    ROUTING REVISED TO REFLECT AN URBANIZED CONDITION
  78          RS       4    ELEV      -1
  79          RC   0.035   0.035   0.035   3600   0.001  1010.5
  80          RX       0      20      40      46      56      62      82     102
  81          RY  1010.5  1009.7  1009.0    1006    1006    1009  1009.7  1010.5
              *
              * DDM   ***** Updated *****
```

1 HEC-1 INPUT PAGE 3

```
LINE          ID.....1.....2.....3.....4.....5.....6.....7.....8.....9.....10
  82          KK    BR51C
  83          KM    SUB-BASIN BR51C
  84          KM    24-HOUR SCS TYPE II RAINFALL WAS USED TO FIND TC & R FOR THIS BASIN
  85          KM    THIS BASIN USED RAINFALL REDUCTION FACTOR OF  .934
  86          KM      L = 1.21  Kb = .043  Adj. Slope =    6.0
  87          BA    .699
  88          LG    .250    .250   4.900    .350  31.000
  89          UC   1.325    .722
  90          UA       0       5      16      30      65      77      84      90      94      97
  91          UA     100
              *
              * DDM   ***** Preserved *****
  92          KK    BR51R
  93          KM    DIVERT RETENTION VOLUME
  94          KM    RELAXED RETENTION VOLUME FROM 53.6 AC-FT
  95          DT  RET159    50.5
  96          DI       0    1000   10000
  97          DQ       0    1000   10000
              *
              * DDM   ***** Preserved *****
  98          KK    CB51C
  99          KM     COMBINE ROUTED FLOW FROM COMPUTATION POINT CVR47C AND SUB-BASIN AVR51C
 100          KM     WITH RUNOFF FROM SUB-BASIN BR51C
 101          HC       3
              *
              *  ********************************************************************
              *  ******************MODIFICATION MADE FOR ALT 2A**********************
              *  ********************************************************************
              *
              *
              *
              *  ********************************************************************
              *
              *  FOR THE LAVEEN ADMP MODIFICATIONS WERE MADE TO CONVEY FLOWS TO THIS POINT
              *  THIS MODELING USES DETENTION BASINS, CHANNELS AND STORM DRAINS
              *
              *
              *
              * DDM   ***** Updated *****
```

```
102          KK   DR43C
103          KM   SUB-BASIN DR43C
104          KM   24-HOUR SCS TYPE II RAINFALL WAS USED TO FIND TC & R FOR THIS BASIN
105          KM   THIS BASIN USED RAINFALL REDUCTION FACTOR OF  .934
106          KM     L = 1.49  Kb = .039  Adj. Slope =   69.0
107          BA    .922
108          LG    .250    .250   5.100    .300  38.000
109          UC    .450    .220
110          UA       0       5      16      30      65      77      84      90      94      97
111          UA     100
             *
             * DDM   ***** Preserved *****
1                                        HEC-1 INPUT                                        PAGE  4

        LINE         ID.....1.....2.....3.....4.....5.....6.....7.....8.....9.....10

112          KK   DR43R
113          KM   DIVERT RETENTION VOLUME
114          DT  RET43C    27.9
115          DI       0    1000   10000
116          DQ       0    1000   10000
             *
             *
             *  ********************PROPOSED BASIN IN SUB-BASIN DR43C**********************
             *

117          KK  43BASN
118          KM   DETENTION BASIN AT THE DOBBINES AND 43TH AVE INTERSECTION.
119          KM   THIS IS A BASIN ADDED FOR THE ADMP ALTERNATE 4A
120          KM   THE BASIN HAS 10 AC TOP, 7.2 AC BOTTOM AND IS 10FT DEEP WITH 5:1 SIDE SLOPES
121          KO       1
122          RS       1    ELEV       0
123          SA    7.20    7.76    8.32    8.88    9.44    10.0
124          SQ       0      20      20      20      20      20
125          SE       0       2       4       6       8      10
             *
             *
             *  ****************DOBBINS ROAD CHANNEL*****************************
             *
             *  ************** ALT2 WILL PICK UP ALL FLOWS-FROM DR43C ***********

126          KK  ROA51A
127          KM   ROUTE FLOW FROM DR43C WEST (1ST REACH) ALONG DOBBINS TO 47TH AVENUE
128          RS       2    ELEV      -1
129          RC   0.035   0.035   0.035    2790   0.042
130          RX       0      40      60      75      80      95     133     153
131          RY    1013    1012    1011    1008    1008    1011    1012    1013
             *
             *
             *
             *  ******************DOBBINS ROAD CHANNEL*********************************
             *
             *

132          KK  ROA51B
133          KM   ROUTE FLOW ALONG DOBBINS FROM 47TH TO 51ST AVENUES
134          KM   CROSS-SECTION REVISED TO REFLECT TO USE CHANNEL
135          RS       2    ELEV      -1
136          RC    .035    .035    .035    3600   .0017
137          RX       0      40      60      75      80      95     133     153
138          RY    1013    1012    1011    1008    1008    1011    1012    1013
             *
             * DDM   ***** Updated *****

139          KK   OA51B
140          KM   SUB-BASIN OA51B
141          KM   24-HOUR SCS TYPE II RAINFALL WAS USED TO FIND TC & R FOR THIS BASIN
142          KM   THIS BASIN USED RAINFALL REDUCTION FACTOR OF  .934
143          KM     L = 1.26  Kb = .036  Adj. Slope =  254.0
144          BA    1.03
1                                        HEC-1 INPUT                                        PAGE  5

        LINE         ID.....1.....2.....3.....4.....5.....6.....7.....8.....9.....10

145          LG    .270    .270   6.000    .200  30.000
146          UC    .233    .074
147          UA       0       5      16      30      65      77      84      90      94      97
148          UA     100
             *
             * DDM   ***** Preserved *****

149          KK   OA51R
150          KM   DIVERT RETENTION VOLUME
151          DT   RET51    80.9
152          DI       0    1000   10000
153          DQ       0    1000   10000
             *
             *
             *
             *  **********************RETENTION BASIN IN SUB-BASIN OA51B*******************
             *

154          KK  DRBASN
155          KM   DETENTION BASIN AT THE DOBBINS AND 51ST AVE INTERSECTION.
156          KM   THIS BASIN WAS ADDED FOR THE ADMP ALTERNATE 4
```



```
157          KM   BASIN HAS 10 AC TOP, 8.5 AC BOTTOM AND IS 5 FT DEEP WITH 5:1 SIDE SLOPES
158          KO       1
159          RS       1    ELEV       0
160          SA     8.5     8.8     9.1     9.4     9.7      10
161          SQ       0      20      20      20      20      20
162          SE       0       2       4       6       5      10
             *
             *
             *
             *  ****************NEW SUB-BASIN SPLIT FROM OA51B*****************************
             *
             *

163          KK   ER47B
164          KM   SUB-BASIN ER47B
165          KM   THIS SUB-BASIN SPLIT FROM OA51B TO ALLOW FOR DETENTION TO BE USED BELOW
166          KM   THE WESTERN CANAL - ALT6A
167          KM   24-HOUR SCS TYPE II RAINFALL WAS USED TO FIND TC & R FOR THIS BASIN
168          KM   THIS BASIN USED RAINFALL REDUCTION FACTOR OF  .934
169          KM     L = 1.26  Kb = .036  Adj. Slope =  254.0
170          BA    0.34
171          LG    .270    .270   6.000    .200  30.000
172          UC    .233    .074
173          UA       0       5      16      30      65      77      84      90      94      97
174          UA     100
             *
             *
             *
             *  ****************PROPOSED BASIN BELOW ER47B**********************************
             *
             *
1                                        HEC-1 INPUT                                        PAGE  6

        LINE         ID.....1.....2.....3.....4.....5.....6.....7.....8.....9.....10

175          KK  ERBASN
176          KM   DETENTION BASIN AT THE ELLIOT AND 47TH AVE INTERSECTION. THE WESTERN CANAL
177          KM   IS USED AS A COLLECTOR FACILITY AND OUTLETS TO THIS DETENTION BASIN. THE
178          KM   BASIN HAS 10 AC TOP, 8.3 AC BOTTOM AND IS 6 FT DEEP WITH 5:1 SIDE SLOPES
179          KO       1
180          RS       1    ELEV       0
181          SA     8.3     8.6     8.9     9.1     9.4     9.7      10
182          SQ       0      20      20      20      20      20      20
183          SE       0       1       2       3       4       5       6
             *
             *  ******************51ST AVENUE CHANNEL**************************************
             *

184          KK  RER47B
185          KM   ROUTE THE OUTFLOW FROM THE ELLIOT ROAD BASIN FROM ELLIOT ROAD TO DOBBINS ROAD
186          RS       2    ELEV      -1
187          RC    .035    .035    .035    6610   .00212
188          RX       0      40      60      75      80      95     133     153
189          RY    1013    1012    1011    1008    1008    1011    1012    1013
             *
             *

190          KK   CDR51
191          KM   COMBINE ROUTED FLOW FROM SUB-BASIN DR43C AND ER47B TO RUNOFF FROM SUB-BASIN
192          KM   OA51B - THIS COMBINATION NOW AT DOBBINS ROAD AND 51ST AVE
193          HC       3
             *
             *
             *  ********************51ST AVENUE CHANNEL**************************************
             *
             *

194          KK  RDR51A
195          KM   ROUTE FLOWS ALONG 51ST AVE TO A BASIN NEAR 51ST AND BASLINE
196          KM   CROSS-SECTION REVISED TO REFLECT TO USE CHANNEL
197          RS       2    ELEV      -1
198          RC    .035    .035    .035    2650   .00532
199          RX       0      40      60      75      80      95     133     153
200          RY    1013    1012    1011    1008    1008    1011    1012    1013
             *
             *
             * DDM   ***** Updated *****

201          KK   SM51C
202          KM   SUB-BASIN SM51C
203          KM   24-HOUR SCS TYPE II RAINFALL WAS USED TO FIND TC & R FOR THIS BASIN
204          KM   THIS BASIN USED RAINFALL REDUCTION FACTOR OF  .934
205          KM     L = 1.29  Kb = .045  Adj. Slope =   12.0
206          BA    .511
207          LG    .290    .250   5.200    .290  17.000
208          UC   1.054    .705
209          UA       0       5      16      30      65      77      84      90      94      97
210          UA     100
             *
             * DDM   ***** Preserved *****
1                                        HEC-1 INPUT                                        PAGE  7

        LINE         ID.....1.....2.....3.....4.....5.....6.....7.....8.....9.....10
```

```
211         KK   SM51R
212         KM   DIVERT RETENTION VOLUME
213         DT  RET51C    23.0
214         DI       0    1000   10000
215         DQ       0    1000   10000
            *
            *
            * DDM   ***** Preserved *****

216         KK  RB2591
217         KM   ROUTE FLOW FROM COMPUTATION POINT CS51C TO COMPUTATION POINT CB259C
218         KM   FIRST REACH
219         KM   CROSS-SECTION REVISED TO REFLECT DEVELOPED CONDITIONS
220         RS       3    ELEV      -1
221         RC   0.035   0.035   0.035   4200  0.0036
222         RX       0      40      60      65      75      80     100     140
223         RY    1030    1029    1028    1025    1025    1028    1029    1030
            *
            * RC  0.07    0.07    0.07    4200  0.0036
            * RX     0     612    1085    1155    1595    1670    1765    2130
            * RY1029.6    1029    1028  1027.5  1027.5    1028    1028  1029.6
            *
            *


224         KK   C51SM
225         KM   COMBINE SUBARAREA SM51C WITH 51ST AVE CHANNEL
226         HC       2
            *
            *
            *  **********************51ST AVNUE CHANNEL*********************************
            *
            *

227         KK  RDR51B
228         KM   ROUTE FLOWS ALONG 51ST AVE TO A BASIN NEAR 51ST AND BASLINE
229         KM   CROSS-SECTION REVISED TO REFLECT TO USE CHANNEL
230         RS       2    ELEV      -1
231         RC    .035    .035    .035    2650   .00532
232         RX       0      40      50      75      90      95     133     153
233         RY    1013    1012    1011    1006    1006   1011    1012    1013
            *
            *
            *  ********PROPOSED BASIN NEAR BASELINE AND LAVEEN CONVEYANCE CHANNEL***********
            *
            *
```



```
262         BA    .241
263         LG    .250    .150   8.000    .100  29.000
264         UC   1.212    .973
265         UA       0       5      16      30      65      77      84      90      94      97
266         UA     100
            *
            * DDM   ***** Preserved *****

267         KK  AVR55R
268         KM   DIVERT RETENTION VOLUME
269         DT  RET55C    25.6
270         DI       0    1000   10000
271         DQ       0    1000   10000
            *
            * DDM   ***** Preserved *****

272         KK  RB1592
273         KM    ROUTE FLOW FROM SUBASIN AVR55C TO COMPUTATION POINT CB159C
274         KM   ROUTING REVISED TO REFLECT URBANIZED CONDITIONS
275         RS       3    ELEV      -1
276         RC   0.035   0.035   0.035    3600   0.001
277         RX       0      20      40      46      56      62      82     102
278         RY    1004    1003    1002     999     999    1002    1003    1004
            *
            * DDM   ***** Updated *****
```



```
LINE        ID.......1.......2.......3.......4.......5.......6.......7.......8.......9......10
```

```
242         KK   DBR51
243         KM   ROUTE FLOWS WEST ALONG BASELINE TO THE LAVEEN CONVEYANCE CHANNEL
244         KM   CROSS-SECTION REVISED TO REFLECT TO USE STORM DRAIN
245         RK    2640   0.003    .013            CIRC       4
            *
            *


246         KK   CB51D
247         KM    COMBINE ROUTED FLOW FROM COMPUTATION POINT CB51C AND FLOWS FROM 51ST
248         KM    AVENUE STORM DRAIN PROPOSED BY THE LAVEEN ADMP
249         HC       2
            *
            *
            *
            * DDM   ***** Preserved *****

250         KK  RB1591
251         KM    ROUTE FLOW FROM COMPUTATION POINT CB51C TO COMPUTATION POINT CB159C
252         KM    MARICOPA DRAIN FROM 51ST AVE TO 59TH AVE.
253         RS       3    ELEV      -1
254         RC    .030    .030    .030    5200   .0011
255         RX       0      10      20      45     125     150     160     170
256         RY  1000.2  1000.1    1000     995     995    1000  1000.1  1000.2
            *
            * DDM   ***** Updated *****

257         KK  AVR55C
258         KM   SUB-BASIN AVR55C
259         KM   24-HOUR SCS TYPE II RAINFALL WAS USED TO FIND TC & R FOR THIS BASIN
260         KM   THIS BASIN USED RAINFALL REDUCTION FACTOR OF  .934
261         KM     L =  .93  Kb = .051  Adj. Slope =    5.0
```

```
279         KK  BR159C
280         KM   SUB-BASIN BR159C
281         KM   24-HOUR SCS TYPE II RAINFALL WAS USED TO FIND TC & R FOR THIS BASIN
282         KM   THIS BASIN USED RAINFALL REDUCTION FACTOR OF  .934
283         KM     L = 1.68  Kb = .054  Adj. Slope =    8.0
284         BA    .675
285         LG    .170    .250   4.800    .420  28.000
286         UC   1.500   1.100
287         UA       0       5      16      30      65      77      84      90      94      97
288         UA     100
            *
            * DDM   ***** Preserved *****

289         KK  BR159R
290         KM   DIVERT RETENTION VOLUME
291         KM   RELAXED RETENTION VOLUME FROM 43.2 AC-FT
292         DT  RET159    39.5
293         DI       0    1000   10000
294         DQ       0    1000   10000
            *
            * DDM   ***** Updated *****

295         KK   VR59C
296         KM   SUB-BASIN VR59C
297         KM   24-HOUR SCS TYPE II RAINFALL WAS USED TO FIND TC & R FOR THIS BASIN
298         KM   THIS BASIN USED RAINFALL REDUCTION FACTOR OF  .934
299         KM     L =  .75  Kb = .083  Adj. Slope =    4.0
300         BA    .233
301         LG    .130    .150   7.000    .180   9.000
302         UC   1.500   1.058
303         UA       0       5      16      30      65      77      84      90      94      97
304         UA     100
            *
            * DDM   ***** Preserved *****

305         KK  RB1593
306         KM   ROUTE FLOW FROM SUB-BASIN VR59C TO COMPUTATION POINT CB159C
307         KM   ROUTING REVISED TO REFLECT URBANIZED CONDITIONS
308         RS       3    ELEV      -1
309         RC   0.035   0.035   0.035    3000  0.0015
310         RX       0      20      40      46      56      62      82     102
311         RY    1002  1001.3    1001     998     998    1001  1001.3    1002
            *
            * DDM   ***** Preserved *****

312         KK  CB159N
313         KM     COMBINE ROUTED FLOWS FROM COMPUTATION POINT CB51C AND SUB-BASINS AVR51C
314         KM     AND VR59C WITH RUNOFF FROM SUB-BASIN BR159C
315         KM     CP (NORTH FLOWS) AT 59TH AVE AND BASELINE RD.
316         HC       4
            *
            *
            * DDM   ***** Updated *****
```



```
LINE        ID.......1.......2.......3.......4.......5.......6.......7.......8.......9......10
```

```
317         KK   ER55B
318         KM   SUB-BASIN ER55B
319         KM   24-HOUR SCS TYPE II RAINFALL WAS USED TO FIND TC & R FOR THIS BASIN
320         KM   THIS BASIN USED RAINFALL REDUCTION FACTOR OF  .934
321         KM     L =  .79  Kb = .050  Adj. Slope =    8.0
322         BA    .256
323         LG    .260    .260   6.000    .210  27.000
324         UC    .908    .599
```

```
 325          UA       0       5      16      30      65      77      84      90      94      97
 326          UA     100
                     *
                     * DDM   ***** Preserved *****

 327          KK   ER55R
 328          KM   DIVERT RETENTION VOLUME
 329          DT   RET55    19.2
 330          DI       0    1000   10000
 331          DQ       0    1000   10000
                     *
                     *
                     * DDM   ***** Preserved *****

 332          KK   RE59B
 333          KM   ROUTE FLOWS FROM CONCENTRATION POINT CRE55B TO CP CER59B
 334          KM   ROUTING REVISED TO REFLECT URBANIZED CONDITIONS
 335          RS       2    ELEV      -1
 336          RC    .035    .035    .035    2600    .002
 337          RX       0      30      50      55      65      70      90     120
 338          RY    1026    1024    1023    1020    1020    1023    1024    1026
                     *
                     * DDM   ***** Updated *****

 339          KK   ER59B
 340          KM   SUB-BASIN ER59B
 341          KM   24-HOUR SCS TYPE II RAINFALL WAS USED TO FIND TC & R FOR THIS BASIN
 342          KM   THIS BASIN USED RAINFALL REDUCTION FACTOR OF  .934
 343          KM     L =  .95  Kb = .030  Adj. Slope =    8.0
 344          BA    .259
 345          LG    .130    .250   5.000    .370  71.000
 346          UC    .671    .492
 347          UA       0       5      16      30      65      77      84      90      94      97
 348          UA     100
                     *
                     * DDM   ***** Preserved *****

 349          KK   ER59R
 350          KM   DIVERT RETENTION VOLUME
 351          DT   RET59    23.2
 352          DI       0    1000   10000
 353          DQ       0    1000   10000
                     *
                     * DDM   ***** Preserved *****
```



```
LINE         ID.......1.......2.......3.......4.......5.......6.......7.......8.......9......10

 354          KK  CER59B
 355          KM   COMBINE ROUTED FLOW FROM CP CRE55B TO RUNOFF FROM SUBBASIN ER59B
 356          HC       2
                     *
                     *
                     * DDM   ***** Updated *****

 357          KK  RIR63B
 358          KM   CP CIR63B IS LOCATED ON THE WESTERN EDGE OF THE STUDY AREA WHICH IS BOUNDED
 359          KM   BY A CONCRETE IRRIGATION CANAL AND EARTHEN ROADWAY.  THE IRRIGATION CANAL IS
 360          KM   OVERTOPPED AND FLOW CONTINUES ITS NATURAL FLOW PATH TO THE WEST.  THE
 361          KM   FLOW IS APPROXIMATELY 45 CFS SOUTH TO MARICOPA DRAIN.
 362          DT  DIR63B
 363          DI       0      45     100     200     400     600     800
 364          DQ       0       0      55     155     355     555     755
                     *
                     * DDM   ***** Updated *****

 365          KK   IR63B
 366          KM   SUB-BASIN IR63B
 367          KM   24-HOUR SCS TYPE II RAINFALL WAS USED TO FIND TC & R FOR THIS BASIN
 368          KM   THIS BASIN USED RAINFALL REDUCTION FACTOR OF  .934
 369          KM     L =  .82  Kb = .034  Adj. Slope =   11.0
 370          BA    .124
 371          LG    .130    .250   4.800    .400  71.000
 372          UC    .575    .561
 373          UA       0       5      16      30      65      77      84      90      94      97
 374          UA     100
                     *
                     * DDM   ***** Preserved *****

 375          KK    IR63
 376          KM   DIVERT RETENTION VOLUME
 377          DT   RET63    11.2
 378          DI       0    1000   10000
 379          DQ       0    1000   10000
                     *
                     * DDM   ***** Preserved *****

 380          KK  CIR63B
 381          KM   COMBINE ROUTED FLOW FROM CP CER59B AND RUNOFF OF SUB-BASINS IR63B & IR62B
 382          HC       2
                     *
                     * DDM   ***** Preserved *****

 383          KK  RIR65C
 384          KM    ROUTE RETRIEVED FLOW FROM SUB-BASIN IR63B TO COMPUTATION POINT CIR65C
```



```
 385          KM   CROSS-SECTION REVISED TO REFLECT URBANIZED CONDITIONS
 386          RS       7    ELEV      -1
 387          RC   0.030   0.030   0.030    3300  0.0010
 388          RX       0       1      11      21      26      31      41      46
 389          RY       6       5       4       1       1       4       5       6
                     *
                     * DDM   ***** Updated *****
```



```
LINE         ID.......1.......2.......3.......4.......5.......6.......7.......8.......9......10

 390          KK   IR65C
 391          KM   SUB-BASIN IR65C
 392          KM   24-HOUR SCS TYPE II RAINFALL WAS USED TO FIND TC & R FOR THIS BASIN
 393          KM   THIS BASIN USED RAINFALL REDUCTION FACTOR OF  .934
 394          KM     L =  .84  Kb = .052  Adj. Slope =   13.0
 395          BA    .170
 396          LG    .280    .250   4.800    .360  21.000
 397          UC    .829    .718
 398          UA       0       5      16      30      65      77      84      90      94      97
 399          UA     100
                     *
                     * DDM   ***** Preserved *****

 400          KK   IR65R
 401          KM   DIVERT RETENTION VOLUME
 402          DT  RET65C    14.4
 403          DI       0    1000   10000
 404          DQ       0    1000   10000
                     *
                     * DDM   ***** Preserved *****

 405          KK  CIR65C
 406          KM   COMBINE RETRIEVED ROUTED FLOW FROM SUB-BASIN IR63B TO RUNOFF FROM SUB-BASIN
 407          KM   IR65C
 408          HC       2
                     *
                     * DDM   ***** Preserved *****

 409          KK   RIRDC
 410          KM   ROUTE FLOW FROM COMPUTATION POINT CIR65C TO COMPUTATION POINT CIRDC
 411          KM   CROSS-SECTION REVISED TO REFLECT URBANIZED CONDITIONS
 412          RS       2    ELEV      -1
 413          RC    0.03    0.03    0.03    3200  0.0018
 414          RX       0       1      10      20      30      40      50      51
 415          RY  1014.5    1014    1013    1010    1010    1013    1014  1014.5
                     *
                     * DDM   ***** Preserved *****

 416          KK  DIIRDC
 417          KM    ROUTED FLOW FROM COMPUTATION POINT CIR65C IS SPLIT AT COMPUTATION POINT
 418          KM    CIRDC
 419          DT  RIR65C
 420          DI       0      16      34      51      71      80     100     120     150
 421          DQ       0      16      25      32      40      49      69      89     119
                     *
                     * DDM   ***** Updated *****

 422          KK    IRDC
 423          KM   SUB-BASIN IRDC
 424          KM   24-HOUR SCS TYPE II RAINFALL WAS USED TO FIND TC & R FOR THIS BASIN
 425          KM   THIS BASIN USED RAINFALL REDUCTION FACTOR OF  .934
 426          KM     L = 1.47  Kb = .038  Adj. Slope =   12.0
 427          BA    .525
 428          LG    .190    .250   4.800    .370  51.000
```



```
LINE         ID.......1.......2.......3.......4.......5.......6.......7.......8.......9......10

 429          UC    .958    .694
 430          UA       0       5      16      30      65      77      84      90      94      97
 431          UA     100
                     *
                     * DDM   ***** Preserved *****

 432          KK    IRDR
 433          KM   DIVERT RETENTION VOLUME
 434          DT  RETRDC    43.2
 435          DI       0    1000   10000
 436          DQ       0    1000   10000
                     *
                     * DDM   ***** Preserved *****

 437          KK   CIRDC
 438          KM    COMBINE ROUTED FLOW FROM COMPUTATION POINT CIR65C TO RUNOFF FROM SUB-BASIN
 439          KM    IRDC
 440          HC       2
                     *
                     * DDM   ***** Preserved *****

 441          KK  RIRSMC
 442          KM    ROUTE FLOW COMPUTATION POINT CIRDC TO COMPUTATION POINT CIRSMC
 443          KM   CROSS-SECTION REVISED TO REFLECT URBANIZED CONDITIONS
 444          RS       3    ELEV      -1
 445          RC   0.035   0.035   0.035    3400  0.0058
```

```
446          RX      0     40     60     70     80     90    110    150
447          RY   1006   1005   1004    999    999   1004   1005   1006
             *
             * DDM   ***** Updated *****

448          KK   IRSMC
449          KM   SUB-BASIN IRSMC
450          KM   24-HOUR SCS TYPE II RAINFALL WAS USED TO FIND TC & R FOR THIS BASIN
451          KM   THIS BASIN USED RAINFALL REDUCTION FACTOR OF  .934
452          KM     L =  .88  Kb = .043  Adj. Slope =   32.0
453          BA    .241
454          LG    .210    .250   4.500    .430  34.000
455          UC    .479    .332
456          UA       0       5      16      30      65      77      84      90      94      97
457          UA     100
             *
             * DDM   ***** Preserved *****

458          KK   IRSMR
459          KM   DIVERT RETENTION VOLUME
460          KM   RELAXED RETENTION VOLUME FROM 20.0 AC-FT
461          DT  RETSMC    19.1
462          DI       0    1000   10000
463          DQ       0    1000   10000
             *
             * DDM   ***** Preserved *****
1                                    HEC-1 INPUT                                    PAGE 14

        LINE ID.....1.....2.....3.....4.....5.....6.....7.....8.....9.....10


464          KK  CIRSMS
465          KM
466          HC       2
             *
             * DDM   ***** Preserved *****

467          KK  CIRSMC
468          KM   COMBINE FLOWS IN MARICOPA DRAIN JUST WEST OF 75TH AVE
469          HC       2
             *
             * DDM   ***** Updated *****

470          KK    CD2C
471          KM   SUB-BASIN CD2C
472          KM   24-HOUR SCS TYPE II RAINFALL WAS USED TO FIND TC & R FOR THIS BASIN
473          KM   THIS BASIN USED RAINFALL REDUCTION FACTOR OF  .934
474          KM     L = 1.57  Kb = .043  Adj. Slope =    4.0
475          BA    .598
476          LG    .240    .150   8.400    .090  31.000
477          UC   1.500   1.116
478          UA       0       5      16      30      65      77      84      90      94      97
479          UA     100
             *
             * DDM   ***** Preserved *****

480          KK    CD2R
481          KM   DIVERT RETENTION VOLUME
482          KM   RELAXED RETENTION VOLUME FROM 44.8 AC-FT.
483          DT   RET2C    39.7
484          DI       0    1000   10000
485          DQ       0    1000   10000
             *
             *
             * DDM   ***** Preserved *****

486          KK   CCD2C
487          KM   COMBINE FLOW FROM CD2C AND MARIOCPA DRAIN
488          KM   MARICOPA DRAIN AT 1000 FT EAST OF 75TH AVE AND SOUTH MOUNTAIN AVE. (1/2 MILE
489          KM   BETWEEN DOBBINS AND BASELINE ROADS.)
490          HC       2
             *
             * DDM   ***** Preserved *****

491          KK  RCD3C1
492          KM    MARICOPA DRAIN FROM JUST EAST OF 75TH AVE ALONG POWERLINE RD (INDIAN
493          KM    RESERVATION BOUNDARY).
494          KM    ADJUST SLOPE FROM .0011 TO REFLECT A VELOCITY OF LESS THAN 5 FT/SEC
495          RS       2    ELEV      -1
496          RC    .030    .030    .030   3700   .0007
497          RX       0      10      20      45     165     190     200     210
498          RY   986.2   986.1     986     981     981     986   986.1   986.2
             *
             * DDM   ***** Updated *****
1                                    HEC-1 INPUT                                    PAGE 15

        LINE ID.....1.....2.....3.....4.....5.....6.....7.....8.....9.....10


499          KK   A67AC
500          KM   SUB-BASIN A67AC
501          KM   24-HOUR SCS TYPE II RAINFALL WAS USED TO FIND TC & R FOR THIS BASIN
502          KM   THIS BASIN USED RAINFALL REDUCTION FACTOR OF  .934
503          KM     L = 1.65  Kb = .042  Adj. Slope =    7.0
504          BA    .618
505          LG    .250    .250   5.100    .320  34.000
```



```
506          UC   1.500   1.140
507          UA       0       5      16      30      65      77      84      90      94      97
508          UA     100
             *
             * DDM   ***** Preserved *****

509          KK   A67AR
510          KM   DIVERT RETENTION VOLUME
511          DT  RET67A    38.4
512          DI       0    1000   10000
513          DQ       0    1000   10000
             *
             * DDM   ***** Preserved *****

514          KK  RCD4C1
515          KM   ROUTE FLOW FROM SUB-BASIN 67AC CPCD4C TO COMPUTATION POINT CPCD4C
516          KM   CROSS-SECTION REVISED TO REFLECT URBANIZED CONDITIONS
517          RS       2    ELEV      -1
518          RC   0.035   0.035   0.035    2600  0.0024
519          RX       0      40      50      55      60      65      70     110
520          RY     988     987     986     983     983     986     987     988
             *
             * DDM   ***** Updated *****

521          KK    CD4C
522          KM   SUB-BASIN CD4C
523          KM   24-HOUR SCS TYPE II RAINFALL WAS USED TO FIND TC & R FOR THIS BASIN
524          KM   THIS BASIN USED RAINFALL REDUCTION FACTOR OF  .934
525          KM     L =  .64  Kb = .051  Adj. Slope =    9.0
526          BA    .190
527          LG    .250    .250   4.900    .350  29.000
528          UC    .771    .500
529          UA       0       5      16      30      65      77      84      90      94      97
530          UA     100
             *
             * DDM   ***** Preserved *****

531          KK    CD4R
532          KM   DIVERT RETENTION VOLUME
533          DT  RETD4C    13.6
534          DI       0    1000   10000
535          DQ       0    1000   10000
             *
             * DDM   ***** Preserved *****
1                                    HEC-1 INPUT                                    PAGE 16

        LINE ID.....1.....2.....3.....4.....5.....6.....7.....8.....9.....10


536          KK  CPCD4C
537          KM    COMBINE ROUTED FLOW FROM SUB-BASIN 67AC TO RUNOFF FROM SUB-BASIN CD4C
538          HC       2
             *
             * DDM   ***** Preserved *****

539          KK  RCD3C2
540          KM   ROUTE FLOW FROM COMPUTATION POINT CPCD4C TO COMPUTATION POINT CPCD3C
541          KM   CROSS-SECTION REVISED TO REFLECT URBANIZED CONDITIONS
542          RS       3    ELEV      -1
543          RC   0.035   0.035   0.035    5200  0.0024
544          RX       0      40      50      55      60      65      70     110
545          RY     988     987     986     983     983     986     987     988
             *
             * DDM   ***** Updated *****

546          KK    CD3C
547          KM   SUB-BASIN CD3C
548          KM   24-HOUR SCS TYPE II RAINFALL WAS USED TO FIND TC & R FOR THIS BASIN
549          KM   THIS BASIN USED RAINFALL REDUCTION FACTOR OF  .934
550          KM     L = 1.15  Kb = .044  Adj. Slope =   10.0
551          BA    .480
552          LG    .240    .150   7.000    .140  33.000
553          UC    .929    .579
554          UA       0       5      16      30      65      77      84      90      94      97
555          UA     100
             *
             * DDM   ***** Preserved *****

556          KK    CD3R
557          KM   DIVERT RETENTION VOLUME
558          KM   RELAXED RETENTION VOLUME FROM 35.2 AC-FT.
559          DT  RETD3C    32.6
560          DI       0    1000   10000
561          DQ       0    1000   10000
             *
             * DDM   ***** Preserved *****

562          KK  CPCD3C
563          KM   COMBINE ROUTED FLOW FROM COMPUTATION POINT CPCD4C, ROUTED FLOW FROM DIVERSION
564          KM   POINT AT BASELINE ROAD WITH RUNOFF FROM SUB-BASIN CD3C
565          HC       3
566          ZZ
```

```
1
                SCHEMATIC DIAGRAM OF STREAM NETWORK
 INPUT
  LINE      (V) ROUTING          (--->) DIVERSION OR PUMP FLOW
   NO.      (.) CONNECTOR        (<---) RETURN OF DIVERTED OR PUMPED FLOW

    23       VR47C
             .
             .
    50       .-------> RET47C
    47       VR47R
             V
             V
    53      RBR511
             .
             .
    60       .      AVR51C
             .        .
             .        .
    72       .        .-------> RET51C
    70       .      AVR51R
             .        V
             .        V
    75       .      RBR512
             .        .
             .        .
    82       .        .      BR51C
             .        .        .
             .        .        .
    95       .        .        .-------> RET159
    92       .        .      BR51R
             .        .        .
             .        .        .
    98       CB51C.....................
             .
             .
   102       .       DR43C
             .         .
             .         .
   114       .         .-------> RET43C
   112       .       DR43R
             .         V
             .         V
   117       .      43BASN
             .         V
             .         V
   126       .      ROA51A
             .         V
             .         V
   132       .      ROA51B
             .         .
             .         .
   139       .         .      OA51B
             .         .        .
             .         .        .
   151       .         .        .-------> RET51
   149       .         .      OA51R
             .         .        V
             .         .        V
   154       .         .      DRBASN
             .         .        .
             .         .        .
   163       .         .        .      ER47B
             .         .        .        V
             .         .        .        V
   175       .         .        .      ERBASN
             .         .        .        V
             .         .        .        V
   184       .         .        .      RER47B
             .         .        .        .
             .         .        .        .
   190       .       CDR51.....................
             .         V
             .         V
   194       .      RDR51A
             .         .
             .         .
   201       .         .      SM51C
             .         .        .
             .         .        .
   213       .         .        .-------> RET51C
   211       .         .      SM51R
             .         .        V
             .         .        V
   216       .         .      RB2591
             .         .        .
             .         .        .
   224       .       C51SM.............
             .         V
             .         V
   227       .      RDR51B
             .         V
             .         V
   234       .      BRBASN
             .         V
```



```
             .         V
   242       .         DBR51
             .         .
             .         .
   246       .      CB51D.............
             .         V
             .         V
   250       .      RB1591
             .         .
             .         .
   257       .         .      AVR55C
             .         .        .
             .         .        .
   269       .         .        .-------> RET55C
   267       .         .      AVR55R
             .         .        V
             .         .        V
   272       .         .      RB1592
             .         .        .
             .         .        .
   279       .         .        .      BR159C
             .         .        .        .
             .         .        .        .
   292       .         .        .        .-------> RET159
   289       .         .        .      BR159R
             .         .        .        .
             .         .        .        .
   295       .         .        .        .      VR59C
             .         .        .        .        V
             .         .        .        .        V
   305       .         .        .        .      RB1593
             .         .        .        .        .
             .         .        .        .        .
   312       .      CB159N.....................................
             .         .
             .         .
   317       .         .      ER55B
             .         .        .
             .         .        .
   329       .         .        .-------> RET55
   327       .         .      ER55R
             .         .        V
             .         .        V
   332       .         .      RE59B
             .         .        .
             .         .        .
   339       .         .        .      ER59B
             .         .        .        .
             .         .        .        .
   351       .         .        .        .-------> RET59
   349       .         .        .      ER59R
             .         .        .        .
             .         .        .        .
   354       .         .      CER59B.............
             .         .        .
             .         .        .
   362       .         .        .-------> DIR63B
   357       .         .      RIR63B
             .         .        .
             .         .        .
   365       .         .        .      IR63B
             .         .        .        .
             .         .        .        .
   377       .         .        .        .-------> RET63
   375       .         .        .      IR63
             .         .        .        .
             .         .        .        .
   380       .         .      CIR63B.............
             .         .        V
             .         .        V
   383       .         .      RIR65C
             .         .        .
             .         .        .
   390       .         .        .      IR65C
             .         .        .        .
             .         .        .        .
   402       .         .        .        .-------> RET65C
   400       .         .        .      IR65R
             .         .        .        .
             .         .        .        .
   405       .         .      CIR65C.............
             .         .        V
             .         .        V
   409       .         .      RIRDC
             .         .        .
             .         .        .
   419       .         .        .-------> RIR65C
   416       .         .      DIIRDC
             .         .        .
             .         .        .
   422       .         .        .      IRDC
             .         .        .        .
             .         .        .        .
   434       .         .        .        .-------> RETRDC
   432       .         .        .      IRDR
             .         .        .        .
```

```
                .          .          .
437             .       CIRDC..........
                .          V          
                .          V          
441             .       RIRSMC        
                .          .          
                .          .          
448             .          .       IRSMC
                .          .          .
                .          .          .
461             .          .          .-------->  RETSMC
458             .          .       IRSMR
                .          .          .
                .          .          .
464             .       CIRSMS.........
                .          .          
                .          .          
467        CIRSMC..........           
                .                     
                .                     
470             .       CD2C          
                .          .          
                .          .          
483             .          .------->   RET2C
480             .       CD2R          
                .          .          
                .          .          
486        CCD2C..........            
              V                       
              V                       
491        RCD3C1                     
                .                     
                .                     
499             .       A67AC         
                .          .          
                .          .          
511             .          .------->  RET67A
509             .       A67AR         
                .          V          
                .          V          
514             .       RCD4C1        
                .          .          
                .          .          
521             .          .       CD4C
                .          .          .
                .          .          .-------->  RETD4C
531             .          .       CD4R
                .          .          .
                .          .          .
536             .       CPCD4C.........
                .          V          
                .          V          
539             .       RCD3C2        
                .          .          
                .          .          
546             .          .       CD3C
                .          .          .
                .          .          .
559             .          .          .-------->  RETD3C
556             .          .       CD3R
                .          .          .
                .          .          .
562        CPCD3C.........................

(***) RUNOFF ALSO COMPUTED AT THIS LOCATION
```



```
1*************************************
 *                                   *
 *  FLOOD HYDROGRAPH PACKAGE  (HEC-1)*
 *            JUN  1998              *
 *         VERSION 4.1               *
 *                                   *
 * RUN DATE   27JUN01  TIME  11:45:42*
 *                                   *
 *************************************
```

```
 ************************************
 *                                  *
 *   U.S. ARMY CORPS OF ENGINEERS   *
 *   HYDROLOGIC ENGINEERING CENTER  *
 *        609 SECOND STREET         *
 *      DAVIS, CALIFORNIA 95616     *
 *          (916) 756-1104          *
 *                                  *
 ************************************
```

```
                     FILENAME LAVALT2A.DAT
                     LAVEEN ADMP ALTERNATIVE MODEL FOR ALTERNATIVE 2
                     MAY 2001
                     MODIFIED BY PROJECT ENGINEERING CONSULTANTS, LTD.



                     LAVEEN ADMS (FINAL HEC-1) 100-YR 24-HR STORM          CBA FILE # 40916-02-30
                     HIDDEN VALLEY WATERSHED/CHAMPION DRAIN WATERSHED
                     INPUT FILE NAME  LAVFUT1A                      DATE: SEPT. 27,2000
                     24-HOUR SCS TYPE II
                    80% RETENTION VOLUME OF FUTURE RETENTION

                    RELAXED RETENTION 1/2 MILE OF MARICOPA DRAIN
                    MINUS FIRST FLUSH OF 5YR 24HR VOLUME

                    MULTIPLAN FOR ROUTING WITHIN THE CHAMPION DRAIN
                      PLAN 2: CHANNEL, S=.0020 ft/ft, n=.031, BW=14', SS=6:1, D=10', TW=124'

                    DDM MCUHP1 LAVEEN REVISED HYDROLOGY - FUTURE LANDUSE CONDITIONS

 22 IO          OUTPUT CONTROL VARIABLES
                      IPRNT          3  PRINT CONTROL
                      IPLOT          0  PLOT CONTROL
                      QSCAL         0.  HYDROGRAPH PLOT SCALE

   IT           HYDROGRAPH TIME DATA
                      NMIN           5  MINUTES IN COMPUTATION INTERVAL
                     IDATE       1    0  STARTING DATE
                     ITIME         0000  STARTING TIME
                        NQ          300  NUMBER OF HYDROGRAPH ORDINATES
                    NDDATE       2    0  ENDING DATE
                    NDTIME         0055  ENDING TIME
                     ICENT           19  CENTURY MARK

                  COMPUTATION INTERVAL     .08 HOURS
                      TOTAL TIME BASE   24.92 HOURS

               ENGLISH UNITS
                   DRAINAGE AREA         SQUARE MILES
                   PRECIPITATION DEPTH   INCHES
                   LENGTH, ELEVATION     FEET
                   FLOW                  CUBIC FEET PER SECOND
                   STORAGE VOLUME        ACRE-FEET
                   SURFACE AREA          ACRES
                   TEMPERATURE           DEGREES FAHRENHEIT


*** *** *** *** *** *** *** *** *** *** *** *** *** *** *** *** *** *** *** *** *** *** *** *** *** *** *** *** *** *** *** *** *** *** ***


                    **************
                    *            *
 23 KK              *    VR47C   *
                    *            *
                    **************
                              SUB-BASIN VR47C
                              24-HOUR SCS TYPE II RAINFALL WAS USED TO FIND TC & R FOR THIS BASIN
                              THIS BASIN USED RAINFALL REDUCTION FACTOR OF  .934
                                L = 1.65  Kb = .042  Adj. Slope =    7.0
                              RAINFALL DEPTH OF 4.20 WAS SPACIALLY REDUCED AS SHOWN BY THE PB RECORD
                              THE FOLLOWING PC RECORD USED A 24-HR SCS TYPE II STORM

 29 IN                TIME DATA FOR INPUT TIME SERIES
                           JXMIN          15  TIME INTERVAL IN MINUTES
                          JXDATE       1    0  STARTING DATE
                          JXTIME            0  STARTING TIME

                    SUBBASIN RUNOFF DATA

 28 BA                SUBBASIN CHARACTERISTICS
                           TAREA         .87  SUBBASIN AREA

                      PRECIPITATION DATA

 32 PB                     STORM        3.92  BASIN TOTAL PRECIPITATION

 32 PI                  INCREMENTAL PRECIPITATION PATTERN
                          .00       .00       .00       .00       .00       .00       .00       .00       .00       .00
                          .00       .00       .00       .00       .00       .00       .00       .00       .00       .00
                          .00       .00       .00       .00       .00       .00       .00       .00       .00       .00
```

```
         .00    .00    .00    .00    .00    .00    .00    .00    .00    .00
         .00    .00    .00    .00    .00    .00    .00    .00    .00    .00
         .00    .00    .00    .00    .00    .00    .00    .00    .00    .00
         .00    .00    .00    .00    .00    .00    .00    .00    .00    .00
         .00    .00    .00    .00    .00    .00    .00    .00    .00    .00
         .00    .00    .00    .00    .00    .00    .00    .00    .00    .00
         .00    .00    .00    .00    .00    .00    .00    .00    .00    .00
         .00    .00    .00    .00    .00    .00    .00    .00    .00    .00
         .00    .00    .00    .00    .00    .00    .00    .00    .00    .00
         .00    .00    .00    .00    .00    .00    .00    .01    .00    .01
         .01    .01    .01    .01    .01    .01    .01    .01    .03    .03
         .03    .09    .09    .09    .01    .01    .01    .01    .01    .01
         .01    .01    .01    .01    .01    .01    .00    .00    .00    .00
         .00    .00    .00    .00    .00    .00    .00    .00    .00    .00
         .00    .00    .00    .00    .00    .00    .00    .00    .00    .00
         .00    .00    .00    .00    .00    .00    .00    .00    .00    .00
         .00    .00    .00    .00    .00    .00    .00    .00    .00    .00
         .00    .00    .00    .00    .00    .00    .00    .00    .00    .00
         .00    .00    .00    .00    .00    .00    .00    .00    .00    .00
         .00    .00    .00    .00    .00    .00    .00    .00    .00    .00
         .00    .00    .00    .00    .00    .00    .00    .00    .00    .00
         .00    .00    .00    .00    .00    .00    .00    .00    .00    .00
         .00    .00    .00    .00    .00    .00    .00    .00    .00    .00
         .00    .00    .00    .00    .00    .00    .00    .00    .00    .00
         .00    .00    .00    .00    .00    .00    .00    .00    .00    .00
         .00    .00    .00    .00    .00    .00    .00    .00

43 LG       GREEN AND AMPT LOSS RATE
                STRTL       .26  STARTING LOSS
                  DTH       .25  MOISTURE DEFICIT
                 PSIF      5.70  WETTING FRONT SUCTION
                XKSAT       .25  HYDRAULIC CONDUCTIVITY
                RTIMP     27.00  PERCENT IMPERVIOUS AREA

44 UC       CLARK UNITGRAPH
                   TC      1.50  TIME OF CONCENTRATION
                    R       .94  STORAGE COEFFICIENT

45 UA       ACCUMULATED-AREA VS. TIME,  11 ORDINATES
               .0      5.0     16.0     30.0     65.0     77.0     84.0     90.0     94.0     97.0
            100.0

                                     ***

                          UNIT HYDROGRAPH PARAMETERS
                      CLARK   TC=  1.50 HR,        R=   .94 HR
                      SNYDER  TP=   .78 HR,       CP=   .46

                               UNIT HYDROGRAPH
                          68 END-OF-PERIOD ORDINATES
       8.      25.      50.      83.     118.     172.     255.     316.     334.     336.
     329.     322.     312.     300.     287.     272.     259.     246.     230.     210.
     193.     176.     161.     148.     135.     123.     113.     103.      95.      87.
      79.      72.      66.      61.      55.      51.      46.      42.      39.      36.
      33.      30.      27.      25.      23.      21.      19.      17.      16.      15.
      13.      12.      11.      10.       9.       9.       8.       7.       7.       6.
       5.       5.       5.       4.       4.       4.       3.       3.

   ***         ***         ***         ***         ***

              HYDROGRAPH AT STATION    VR47C

   TOTAL RAINFALL =   3.92, TOTAL LOSS =   1.97, TOTAL EXCESS =   1.95

   PEAK FLOW      TIME                  MAXIMUM AVERAGE FLOW
                                6-HR         24-HR        72-HR      24.92-HR
 +   (CFS)        (HR)
                          (CFS)
 +    460.       12.67              152.          45.          44.          44.
                        (INCHES)   1.622        1.935        1.936        1.936
                         (AC-FT)     75.          90.          90.          90.

                      CUMULATIVE AREA =     .87 SQ MI

*** *** *** *** *** *** *** *** *** *** *** *** *** *** *** *** *** *** *** *** *** *** *** *** *** *** *** *** *** *** *** *** *** *** ***

           **************
           *            *
47 KK      *   VR47R    *
           *            *
           **************
                     DIVERT RETENTION VOLUME
                     RELAXED RETENTION VOLUME FROM 72.8 AC-FT

  DT        DIVERSION
                ISTAD      RET47C  DIVERSION HYDROGRAPH IDENTIFICATION
               DSTRMX       67.70  MAXIMUM VOLUME TO BE DIVERTED

  DI             INFLOW       .00   1000.00  10000.00

  DQ      DIVERTED FLOW       .00   1000.00  10000.00
```



```
                                                             ***

   ***         ***         ***         ***         ***

              DIVERSION HYDROGRAPH    RET47C

   PEAK FLOW      TIME                  MAXIMUM AVERAGE FLOW
                                6-HR         24-HR        72-HR      24.92-HR
 +   (CFS)        (HR)
                          (CFS)
 +    460.       12.67              127.          34.          33.          33.
                        (INCHES)   1.360        1.461        1.461        1.461
                         (AC-FT)     63.          68.          68.          68.

                      CUMULATIVE AREA =     .87 SQ MI

   ***         ***         ***         ***         ***

              HYDROGRAPH AT STATION    VR47R

   PEAK FLOW      TIME                  MAXIMUM AVERAGE FLOW
                                6-HR         24-HR        72-HR      24.92-HR
 +   (CFS)        (HR)
                          (CFS)
 +    157.       14.25               38.          11.          11.          11.
                        (INCHES)    .410         .475         .475         .475
                         (AC-FT)     19.          22.          22.          22.

                      CUMULATIVE AREA =     .87 SQ MI

*** *** *** *** *** *** *** *** *** *** *** *** *** *** *** *** *** *** *** *** *** *** *** *** *** *** *** *** *** *** *** *** *** ***

           **************
           *            *
53 KK      *   RBR511   *
           *            *
           **************
                     ROUTE FLOW FROM COMPUTATION POINT CVR47C TO COMPUTATION POINT CB51C
                     MARICOPA DRAIN - 47TH AVE. TO 51ST AVE.

            HYDROGRAPH ROUTING DATA

56 RS          STORAGE ROUTING
                     NSTPS         2  NUMBER OF SUBREACHES
                      ITYP      ELEV  TYPE OF INITIAL CONDITION
                    RSVRIC     -1.00  INITIAL CONDITION
                         X       .00  WORKING R AND D COEFFICIENT

57 RC          NORMAL DEPTH CHANNEL
                       ANL      .030  LEFT OVERBANK N-VALUE
                      ANCH      .030  MAIN CHANNEL N-VALUE
                       ANR      .030  RIGHT OVERBANK N-VALUE
                     RLNTH     3200.  REACH LENGTH
                       SEL     .0011  ENERGY SLOPE
                     ELMAX        .0  MAX. ELEV. FOR STORAGE/OUTFLOW CALCULATION

                                  CROSS-SECTION DATA
                    --- LEFT OVERBANK --- + ------ MAIN CHANNEL ------- + --- RIGHT OVERBANK ---
59 RY       ELEVATION  1008.20  1008.10  1008.00  1003.00  1003.00  1008.00  1008.10  1008.20
58 RX        DISTANCE      .00    10.00    20.00    45.00   115.00   140.00   150.00   160.00

                                             ***

                         COMPUTED STORAGE-OUTFLOW-ELEVATION DATA

      STORAGE       .00     1.43     2.92     4.47     6.07     7.72     9.43    11.20    13.02    14.89
      OUTFLOW       .00    13.39    42.78    84.66   137.73   201.26   274.81   358.09   450.92   553.18
    ELEVATION   1003.00  1003.27  1003.55  1003.82  1004.09  1004.37  1004.64  1004.92  1005.19  1005.46

      STORAGE     16.82    18.81    20.85    22.95    25.10    27.30    29.56    31.88    34.25    36.95
      OUTFLOW    664.80   785.74   916.01  1055.61  1204.58  1362.96  1530.81  1708.20  1895.20  2115.33
    ELEVATION   1005.74  1006.01  1006.28  1006.56  1006.83  1007.11  1007.38  1007.65  1007.93  1008.20

   ***         ***         ***         ***         ***

              HYDROGRAPH AT STATION    RBR511

   PEAK FLOW      TIME                  MAXIMUM AVERAGE FLOW
                                6-HR         24-HR        72-HR      24.92-HR
 +   (CFS)        (HR)
                          (CFS)
 +     97.       14.92               36.          11.          10.          10.
                        (INCHES)    .388         .460         .460         .460
                         (AC-FT)     18.          21.          21.          21.

   PEAK STORAGE   TIME                MAXIMUM AVERAGE STORAGE
                                6-HR         24-HR        72-HR      24.92-HR
 +   (AC-FT)      (HR)
        2.       14.92                1.           0.           0.           0.
```

PEAK STAGE	TIME		6-HR	24-HR	72-HR	24.92-HR
			MAXIMUM AVERAGE STAGE			
+ (FEET)	(HR)					
1003.89	14.92		1003.46	1003.15	1003.14	1003.14

CUMULATIVE AREA = .87 SQ MI

*** ***

****
*   *
60 KK * AVR51C *
*   *
****

SUB-BASIN AVR51C
24-HOUR SCS TYPE II RAINFALL WAS USED TO FIND TC & R FOR THIS BASIN
THIS BASIN USED RAINFALL REDUCTION FACTOR OF .934
L = .86 Kb = .049 Adj. Slope = 10.0

SUBBASIN RUNOFF DATA

65 BA SUBBASIN CHARACTERISTICS
TAREA .28 SUBBASIN AREA

PRECIPITATION DATA

32 PB STORM 3.92 BASIN TOTAL PRECIPITATION

32 PI INCREMENTAL PRECIPITATION PATTERN

.00	.00	.00	.00	.00	.00	.00	.00	.00	.00
.00	.00	.00	.00	.00	.00	.00	.00	.00	.00
.00	.00	.00	.00	.00	.00	.00	.00	.00	.00
.00	.00	.00	.00	.00	.00	.00	.00	.00	.00
.00	.00	.00	.00	.00	.00	.00	.00	.00	.00
.00	.00	.00	.00	.00	.00	.00	.00	.00	.00
.00	.00	.00	.00	.00	.00	.00	.00	.00	.00
.00	.00	.00	.00	.00	.00	.00	.00	.00	.00
.00	.00	.00	.00	.00	.00	.00	.00	.00	.00
.00	.00	.00	.00	.00	.00	.00	.00	.00	.00
.00	.00	.00	.00	.00	.00	.00	.00	.00	.00
.00	.00	.00	.00	.00	.00	.00	.00	.00	.00
.00	.00	.00	.00	.00	.00	.00	.01	.00	.01
.01	.01	.01	.01	.01	.01	.01	.01	.03	.03
.03	.09	.09	.09	.01	.01	.01	.01	.01	.01
.01	.01	.01	.01	.01	.01	.00	.00	.00	.00
.00	.00	.00	.00	.00	.00	.00	.00	.00	.00
.00	.00	.00	.00	.00	.00	.00	.00	.00	.00
.00	.00	.00	.00	.00	.00	.00	.00	.00	.00
.00	.00	.00	.00	.00	.00	.00	.00	.00	.00
.00	.00	.00	.00	.00	.00	.00	.00	.00	.00
.00	.00	.00	.00	.00	.00	.00	.00	.00	.00
.00	.00	.00	.00	.00	.00	.00	.00	.00	.00
.00	.00	.00	.00	.00	.00	.00	.00	.00	.00
.00	.00	.00	.00	.00	.00	.00	.00	.00	.00
.00	.00	.00	.00	.00	.00	.00	.00	.00	.00
.00	.00	.00	.00	.00	.00	.00	.00	.00	.00
.00	.00	.00	.00	.00	.00	.00	.00	.00	.00
.00	.00	.00	.00	.00	.00	.00	.00		

66 LG GREEN AND AMPT LOSS RATE
STRTL .25 STARTING LOSS
DTH .19 MOISTURE DEFICIT
PSIF 6.60 WETTING FRONT SUCTION
XKSAT .17 HYDRAULIC CONDUCTIVITY
RTIMP 30.00 PERCENT IMPERVIOUS AREA

67 UC CLARK UNITGRAPH
TC .83 TIME OF CONCENTRATION
R .55 STORAGE COEFFICIENT

68 UA ACCUMULATED-AREA VS. TIME, 11 ORDINATES

.0	5.0	16.0	30.0	65.0	77.0	84.0	90.0	94.0	97.0
100.0									

***

UNIT HYDROGRAPH PARAMETERS
CLARK TC= .83 HR, R= .55 HR
SNYDER TP= .43 HR, CP= .45

UNIT HYDROGRAPH
39 END-OF-PERIOD ORDINATES

8.	32.	68.	135.	189.	192.	185.	174.	160.	147.
130.	112.	96.	82.	71.	61.	52.	45.	38.	33.
28.	24.	21.	18.	15.	13.	11.	10.	8.	7.
6.	5.	4.	4.	3.	3.	2.	2.	2.	

*** *** *** *** ***

HYDROGRAPH AT STATION AVR51C

TOTAL RAINFALL = 3.92, TOTAL LOSS = 1.76, TOTAL EXCESS = 2.16

PEAK FLOW	TIME		6-HR	24-HR	72-HR	24.92-HR
			MAXIMUM AVERAGE FLOW			
+ (CFS)	(HR)					
		(CFS)				
+ 261.	12.33		55.	16.	16.	16.
		(INCHES)	1.806	2.145	2.147	2.147
		(AC-FT)	27.	33.	33.	33.

CUMULATIVE AREA = .28 SQ MI

*** ***

****
*   *
70 KK * AVR51R *
*   *
****

DIVERT RETENTION VOLUME

DT DIVERSION
ISTAD RET51C DIVERSION HYDROGRAPH IDENTIFICATION
DSTRMX 21.60 MAXIMUM VOLUME TO BE DIVERTED

DI INFLOW .00 1000.00 10000.00

DQ DIVERTED FLOW .00 1000.00 10000.00

***

*** *** *** *** ***

DIVERSION HYDROGRAPH RET51C

PEAK FLOW	TIME		6-HR	24-HR	72-HR	24.92-HR
			MAXIMUM AVERAGE FLOW			
+ (CFS)	(HR)					
		(CFS)				
+ 261.	12.33		41.	11.	10.	10.
		(INCHES)	1.323	1.421	1.421	1.421
		(AC-FT)	20.	22.	22.	22.

CUMULATIVE AREA = .28 SQ MI

*** *** *** *** ***

HYDROGRAPH AT STATION AVR51R

PEAK FLOW	TIME		6-HR	24-HR	72-HR	24.92-HR
			MAXIMUM AVERAGE FLOW			
+ (CFS)	(HR)					
		(CFS)				
+ 133.	13.00		19.	6.	5.	5.
		(INCHES)	.636	.726	.726	.726
		(AC-FT)	10.	11.	11.	11.

CUMULATIVE AREA = .28 SQ MI

*** ***

****
*   *
75 KK * RBR512 *
*   *
****

ROUTE FLOW FROM SUB-BASIN AVR51C TO COMPUTATION POINT CB51C
ROUTING REVISED TO REFLECT AN URBANIZED CONDITION

HYDROGRAPH ROUTING DATA

78 RS STORAGE ROUTING
NSTPS 4 NUMBER OF SUBREACHES
ITYP ELEV TYPE OF INITIAL CONDITION
RSVRIC -1.00 INITIAL CONDITION
X .00 WORKING R AND D COEFFICIENT

79 RC NORMAL DEPTH CHANNEL
ANL .035 LEFT OVERBANK N-VALUE
ANCH .035 MAIN CHANNEL N-VALUE
ANR .035 RIGHT OVERBANK N-VALUE
RLNTH 3600. REACH LENGTH
SEL .0010 ENERGY SLOPE
ELMAX 1010.5 MAX. ELEV. FOR STORAGE/OUTFLOW CALCULATION

CROSS-SECTION DATA
--- LEFT OVERBANK --- + ------ MAIN CHANNEL ------- + --- RIGHT OVERBANK ---

81 RY ELEVATION 1010.50 1009.70 1009.00 1006.00 1006.00 1009.00 1009.70 1010.50

```
 80 RX        DISTANCE        .00     20.00     40.00     46.00     56.00     62.00     82.00    102.00
                                                          ***

                                   COMPUTED STORAGE-OUTFLOW-ELEVATION DATA

          STORAGE       .00       .20       .43       .67       .93      1.21      1.51      1.82      2.16      2.51
          OUTFLOW       .00      1.23      3.96      7.91     12.98     19.15     26.42     34.80     44.31     54.96
        ELEVATION   1006.00   1006.24   1006.47   1006.71   1006.95   1007.18   1007.42   1007.66   1007.89   1008.13

          STORAGE      2.88      3.27      3.68      4.12      4.78      5.69      6.87      8.29      9.93     11.81
          OUTFLOW     66.78     79.81     94.06    110.64    131.71    156.85    187.39    224.29    268.14    319.68
        ELEVATION   1008.37   1008.60   1008.84   1009.08   1009.32   1009.55   1009.79   1010.03   1010.26   1010.50

     ***          ***          ***          ***          ***

                      HYDROGRAPH AT STATION    RBR512

 PEAK FLOW     TIME                          MAXIMUM AVERAGE FLOW
                                      6-HR        24-HR       72-HR     24.92-HR
+   (CFS)      (HR)
                          (CFS)
+     82.     13.58                    19.          5.          5.          5.
                        (INCHES)      .614        .710        .710        .710
                         (AC-FT)        9.         11.         11.         11.

 PEAK STORAGE  TIME                        MAXIMUM AVERAGE STORAGE
                                      6-HR        24-HR       72-HR     24.92-HR
+  (AC-FT)     (HR)
       1.     13.58                     0.          0.          0.          0.

 PEAK STAGE    TIME                         MAXIMUM AVERAGE STAGE
                                      6-HR        24-HR       72-HR     24.92-HR
+   (FEET)     (HR)
   1008.64    13.58                1007.01     1006.35     1006.33     1006.33

                         CUMULATIVE AREA =       .28 SQ MI


*** *** *** *** *** *** *** *** *** *** *** *** *** *** *** *** *** *** *** *** *** *** *** *** *** *** *** *** *** *** *** *** ***

           **************
           *            *
 82 KK     *   BR51C    *
           *            *
           **************
                            SUB-BASIN BR51C
                            24-HOUR SCS TYPE II RAINFALL WAS USED TO FIND TC & R FOR THIS BASIN
                            THIS BASIN USED RAINFALL REDUCTION FACTOR OF  .934
                              L = 1.21  Kb = .043  Adj. Slope =     6.0

             SUBBASIN RUNOFF DATA

 87 BA         SUBBASIN CHARACTERISTICS
                  TAREA         .70  SUBBASIN AREA

               PRECIPITATION DATA

 32 PB            STORM        3.92  BASIN TOTAL PRECIPITATION

 32 PI          INCREMENTAL PRECIPITATION PATTERN
                  .00      .00      .00      .00      .00      .00      .00      .00      .00      .00
                  .00      .00      .00      .00      .00      .00      .00      .00      .00      .00
                  .00      .00      .00      .00      .00      .00      .00      .00      .00      .00
                  .00      .00      .00      .00      .00      .00      .00      .00      .00      .00
                  .00      .00      .00      .00      .00      .00      .00      .00      .00      .00
                  .00      .00      .00      .00      .00      .00      .00      .00      .00      .00
                  .00      .00      .00      .00      .00      .00      .00      .00      .00      .00
                  .00      .00      .00      .00      .00      .00      .00      .00      .00      .00
                  .00      .00      .00      .00      .00      .00      .00      .00      .00      .00
                  .00      .00      .00      .00      .00      .00      .00      .00      .00      .00
                  .00      .00      .00      .00      .00      .00      .00      .00      .00      .00
                  .00      .00      .00      .00      .00      .00      .00      .00      .00      .00
                  .00      .00      .00      .00      .00      .00      .00      .01      .00      .01
                  .01      .01      .01      .01      .01      .01      .01      .01      .03      .03
                  .03      .09      .09      .09      .01      .01      .01      .01      .01      .01
                  .01      .01      .01      .01      .01      .01      .00      .00      .00      .00
                  .00      .00      .00      .00      .00      .00      .00      .00      .00      .00
                  .00      .00      .00      .00      .00      .00      .00      .00      .00      .00
                  .00      .00      .00      .00      .00      .00      .00      .00      .00      .00
                  .00      .00      .00      .00      .00      .00      .00      .00      .00      .00
                  .00      .00      .00      .00      .00      .00      .00      .00      .00      .00
                  .00      .00      .00      .00      .00      .00      .00      .00      .00      .00
                  .00      .00      .00      .00      .00      .00      .00      .00      .00      .00
                  .00      .00      .00      .00      .00      .00      .00      .00      .00      .00
                  .00      .00      .00      .00      .00      .00      .00      .00      .00      .00
                  .00      .00      .00      .00      .00      .00      .00      .00      .00      .00
                  .00      .00      .00      .00      .00      .00      .00      .00      .00      .00
                  .00      .00      .00      .00      .00      .00      .00      .00      .00      .00
                  .00      .00      .00      .00      .00      .00      .00      .00

 88 LG         GREEN AND AMPT LOSS RATE
```



```
                   STRTL         .25  STARTING LOSS
                     DTH         .25  MOISTURE DEFICIT
                    PSIF        4.90  WETTING FRONT SUCTION
                   XKSAT         .35  HYDRAULIC CONDUCTIVITY
                   RTIMP       31.00  PERCENT IMPERVIOUS AREA

 89 UC          CLARK UNITGRAPH
                      TC        1.33  TIME OF CONCENTRATION
                       R         .72  STORAGE COEFFICIENT

 90 UA          ACCUMULATED-AREA VS. TIME,  11 ORDINATES
                    .0       5.0      16.0      30.0      65.0      77.0      84.0      90.0      94.0      97.0
                 100.0

                                                          ***

                                                UNIT HYDROGRAPH PARAMETERS
                                          CLARK    TC=  1.33 HR,        R=   .72 HR
                                         SNYDER    TP=   .67 HR,       CP=   .49

                                                      UNIT HYDROGRAPH
                                                53 END-OF-PERIOD ORDINATES
             9.       31.       62.      101.      150.      234.      311.      336.      334.      323.
           311.      296.      279.      261.      243.      228.      208.      185.      165.      147.
           131.      117.      104.       93.       82.       73.       65.       58.       52.       46.
            41.       37.       33.       29.       26.       23.       21.       18.       16.       15.
            13.       12.       10.        9.        8.        7.        6.        6.        5.        5.
             4.        4.        3.

     ***          ***          ***          ***          ***

                      HYDROGRAPH AT STATION    BR51C

  TOTAL RAINFALL =    3.92, TOTAL LOSS =    1.94, TOTAL EXCESS =    1.99

 PEAK FLOW     TIME                          MAXIMUM AVERAGE FLOW
                                      6-HR        24-HR       72-HR     24.92-HR
+   (CFS)      (HR)
                          (CFS)
+    432.     12.58                   122.         37.         36.         36.
                        (INCHES)     1.618       1.969       1.970       1.970
                         (AC-FT)       60.         73.         73.         73.

                         CUMULATIVE AREA =       .70 SQ MI


*** *** *** *** *** *** *** *** *** *** *** *** *** *** *** *** *** *** *** *** *** *** *** *** *** *** *** *** *** *** *** *** ***

           **************
           *            *
 92 KK     *   BR51R    *
           *            *
           **************
                            DIVERT RETENTION VOLUME
                            RELAXED RETENTION VOLUME FROM 53.6 AC-FT

  DT           DIVERSION
                     ISTAD       RET159  DIVERSION HYDROGRAPH IDENTIFICATION
                    DSTRMX        50.50  MAXIMUM VOLUME TO BE DIVERTED

  DI              INFLOW            .00   1000.00  10000.00

  DQ       DIVERTED FLOW            .00   1000.00  10000.00

                                                          ***

     ***          ***          ***          ***          ***

                      DIVERSION HYDROGRAPH    RET159

 PEAK FLOW     TIME                          MAXIMUM AVERAGE FLOW
                                      6-HR        24-HR       72-HR     24.92-HR
+   (CFS)      (HR)
                          (CFS)
+    432.     12.58                    94.         25.         25.         25.
                        (INCHES)     1.248       1.355       1.355       1.355
                         (AC-FT)       47.         50.         50.         50.

                         CUMULATIVE AREA =       .70 SQ MI

     ***          ***          ***          ***          ***

                      HYDROGRAPH AT STATION    BR51R

 PEAK FLOW     TIME                          MAXIMUM AVERAGE FLOW
                                      6-HR        24-HR       72-HR     24.92-HR
+   (CFS)      (HR)
                          (CFS)
+    196.     13.58                    40.         12.         11.         11.
                        (INCHES)      .530        .615        .615        .615
                         (AC-FT)       20.         23.         23.         23.
```

```
                    CUMULATIVE AREA =      .70 SQ MI


 *** *** *** *** *** *** *** *** *** *** *** *** *** *** *** *** *** *** *** *** *** *** *** *** *** *** *** *** *** *** *** *** ***

              **************
              *            *
   98 KK      *    CB51C   *
              *            *
              **************
                          COMBINE ROUTED FLOW FROM COMPUTATION POINT CVR47C AND SUB-BASIN AVR51C
                          WITH RUNOFF FROM SUB-BASIN BR51C

  101 HC        HYDROGRAPH COMBINATION
                     ICOMP           3   NUMBER OF HYDROGRAPHS TO COMBINE
                                                                        ***

          ***             ***             ***             ***             ***

                        HYDROGRAPH AT STATION     CB51C

  PEAK FLOW      TIME                            MAXIMUM AVERAGE FLOW
                                          6-HR           24-HR          72-HR         24.92-HR
 +   (CFS)       (HR)
                                 (CFS)
 +     278.      13.58                       92.            28.            27.            27.
                               (INCHES)     .464           .557           .557           .557
                                (AC-FT)      46.            55.            55.            55.

                            CUMULATIVE AREA =     1.85 SQ MI


 *** *** *** *** *** *** *** *** *** *** *** *** *** *** *** *** *** *** *** *** *** *** *** *** *** *** *** *** *** *** *** *** ***

              **************
              *            *
  102 KK      *    DR43C   *
              *            *
              **************
                         SUB-BASIN DR43C
                         24-HOUR SCS TYPE II RAINFALL WAS USED TO FIND TC & R FOR THIS BASIN
                         THIS BASIN USED RAINFALL REDUCTION FACTOR OF   .934
                           L = 1.49  Kb = .039  Adj. Slope =     69.0

            SUBBASIN RUNOFF DATA

  107 BA        SUBBASIN CHARACTERISTICS
                     TAREA           .92   SUBBASIN AREA

                PRECIPITATION DATA

   32 PB             STORM          3.92   BASIN TOTAL PRECIPITATION

   32 PI           INCREMENTAL PRECIPITATION PATTERN
                     .00       .00       .00       .00       .00       .00       .00       .00       .00       .00
                     .00       .00       .00       .00       .00       .00       .00       .00       .00       .00
                     .00       .00       .00       .00       .00       .00       .00       .00       .00       .00
                     .00       .00       .00       .00       .00       .00       .00       .00       .00       .00
                     .00       .00       .00       .00       .00       .00       .00       .00       .00       .00
                     .00       .00       .00       .00       .00       .00       .00       .00       .00       .00
                     .00       .00       .00       .00       .00       .00       .00       .00       .00       .00
                     .00       .00       .00       .00       .00       .00       .00       .00       .00       .00
                     .00       .00       .00       .00       .00       .00       .00       .00       .00       .00
                     .00       .00       .00       .00       .00       .00       .00       .00       .00       .00
                     .00       .00       .00       .00       .00       .00       .00       .00       .00       .00
                     .00       .00       .00       .00       .00       .00       .00       .00       .00       .00
                     .00       .00       .00       .00       .00       .00       .00       .01       .00       .01
                     .01       .01       .01       .01       .01       .01       .01       .01       .03       .03
                     .03       .09       .09       .09       .01       .01       .01       .01       .01       .01
                     .01       .01       .01       .01       .01       .01       .00       .00       .00       .00
                     .00       .00       .00       .00       .00       .00       .00       .00       .00       .00
                     .00       .00       .00       .00       .00       .00       .00       .00       .00       .00
                     .00       .00       .00       .00       .00       .00       .00       .00       .00       .00
                     .00       .00       .00       .00       .00       .00       .00       .00       .00       .00
                     .00       .00       .00       .00       .00       .00       .00       .00       .00       .00
                     .00       .00       .00       .00       .00       .00       .00       .00       .00       .00
                     .00       .00       .00       .00       .00       .00       .00       .00       .00       .00
                     .00       .00       .00       .00       .00       .00       .00       .00       .00       .00
                     .00       .00       .00       .00       .00       .00       .00       .00       .00       .00
                     .00       .00       .00       .00       .00       .00       .00       .00       .00       .00
                     .00       .00       .00       .00       .00       .00       .00       .00       .00       .00
                     .00       .00       .00       .00       .00       .00       .00       .00       .00       .00
                     .00       .00       .00       .00       .00       .00       .00       .00

  108 LG        GREEN AND AMPT LOSS RATE
                     STRTL           .25   STARTING LOSS
                       DTH           .25   MOISTURE DEFICIT
                      PSIF          5.10   WETTING FRONT SUCTION
                     XKSAT           .30   HYDRAULIC CONDUCTIVITY
```



```
                     RTIMP         38.00   PERCENT IMPERVIOUS AREA

  109 UC        CLARK UNITGRAPH
                        TC           .45   TIME OF CONCENTRATION
                         R           .22   STORAGE COEFFICIENT

  110 UA        ACCUMULATED-AREA VS. TIME,  11 ORDINATES
                        .0         5.0        16.0        30.0        65.0        77.0        84.0        90.0        94.0        97.0
                     100.0
                                                                        ***

                                                          UNIT HYDROGRAPH PARAMETERS
                                                      CLARK   TC=    .45 HR,          R=    .22 HR
                                                     SNYDER   TP=    .24 HR,         CP=    .54

                                                               UNIT HYDROGRAPH
                                                          17 END-OF-PERIOD ORDINATES
                     163.        732.       1255.       1276.       1062.        819.        583.        398.        271.        185.
                     126.         86.         58.         40.         27.         19.         13.

         ***             ***             ***             ***             ***

                        HYDROGRAPH AT STATION     DR43C

     TOTAL RAINFALL =      3.92, TOTAL LOSS =      1.70, TOTAL EXCESS =      2.22

  PEAK FLOW      TIME                            MAXIMUM AVERAGE FLOW
                                          6-HR           24-HR          72-HR         24.92-HR
 +   (CFS)       (HR)
                                 (CFS)
 +    1391.      12.17                      176.            55.            53.            53.
                               (INCHES)    1.779          2.209          2.212          2.212
                                (AC-FT)      87.           109.           109.           109.

                            CUMULATIVE AREA =      .92 SQ MI


 *** *** *** *** *** *** *** *** *** *** *** *** *** *** *** *** *** *** *** *** *** *** *** *** *** *** *** *** *** *** *** *** ***

              **************
              *            *
  112 KK      *    DR43R   *
              *            *
              **************
                              DIVERT RETENTION VOLUME

     DT         DIVERSION
                     ISTAD        RET43C   DIVERSION HYDROGRAPH IDENTIFICATION
                    DSTRMX         27.90   MAXIMUM VOLUME TO BE DIVERTED

     DI              INFLOW          .00    1000.00   10000.00

     DQ         DIVERTED FLOW        .00    1000.00   10000.00
                                                                        ***

         ***             ***             ***             ***             ***

                        DIVERSION HYDROGRAPH    RET43C

  PEAK FLOW      TIME                            MAXIMUM AVERAGE FLOW
                                          6-HR           24-HR          72-HR         24.92-HR
 +   (CFS)       (HR)
                                 (CFS)
 +     451.      11.92                       45.            14.            14.            14.
                               (INCHES)     .458           .567           .567           .567
                                (AC-FT)      23.            28.            28.            28.

                            CUMULATIVE AREA =      .92 SQ MI

         ***             ***             ***             ***             ***

                        HYDROGRAPH AT STATION     DR43R

  PEAK FLOW      TIME                            MAXIMUM AVERAGE FLOW
                                          6-HR           24-HR          72-HR         24.92-HR
 +   (CFS)       (HR)
                                 (CFS)
 +    1391.      12.17                      150.            41.            39.            39.
                               (INCHES)    1.513          1.644          1.644          1.644
                                (AC-FT)      74.            81.            81.            81.

                            CUMULATIVE AREA =      .92 SQ MI


 *** *** *** *** *** *** *** *** *** *** *** *** *** *** *** *** *** *** *** *** *** *** *** *** *** *** *** *** *** *** *** *** ***

              **************
```

```
                 *             *
117 KK           *   43BASN    *
                 *             *
                 ***************

                          DETENTION BASIN AT THE DOBBINES AND 43TH AVE INTERSECTION.
                          THIS IS A BASIN ADDED FOR THE ADMP ALTERNATE 4A
                          THE BASIN HAS 10 AC TOP, 7.2 AC BOTTOM AND IS 10FT DEEP WITH 5:1 SIDE SLOPES

121 KO             OUTPUT CONTROL VARIABLES
                        IPRNT          1  PRINT CONTROL
                        IPLOT          0  PLOT CONTROL
                        QSCAL         0.  HYDROGRAPH PLOT SCALE

                 HYDROGRAPH ROUTING DATA

122 RS             STORAGE ROUTING
                        NSTPS          1  NUMBER OF SUBREACHES
                        ITYP        ELEV  TYPE OF INITIAL CONDITION
                        RSVRIC       .00  INITIAL CONDITION
                        X            .00  WORKING R AND D COEFFICIENT

123 SA             AREA          7.2      7.8      8.3      8.9      9.4     10.0

124 SQ             DISCHARGE      0.      20.      20.      20.      20.      20.

125 SE             ELEVATION     .00     2.00     4.00     6.00     8.00    10.00
                                                            ***

                                          COMPUTED STORAGE-ELEVATION DATA

                   STORAGE       .00    14.96    31.03    48.23    66.55    85.98
                 ELEVATION       .00     2.00     4.00     6.00     8.00    10.00
```

****

HYDROGRAPH AT STATION 43BASN

****

DA	MON	HRMN	ORD	OUTFLOW	STORAGE	STAGE	*	DA	MON	HRMN	ORD	OUTFLOW	STORAGE	STAGE	*	DA	MON	HRMN	ORD	OUTFLOW	STORAGE	STAGE
1		0000	1	0.	.0	.0	*	1		0820	101	0.	.0	.0	*	1		1640	201	20.	65.0	7.8
1		0005	2	0.	.0	.0	*	1		0825	102	0.	.0	.0	*	1		1645	202	20.	65.0	7.8
1		0010	3	0.	.0	.0	*	1		0830	103	0.	.0	.0	*	1		1650	203	20.	65.0	7.8
1		0015	4	0.	.0	.0	*	1		0835	104	0.	.0	.0	*	1		1655	204	20.	65.0	7.8
1		0020	5	0.	.0	.0	*	1		0840	105	0.	.0	.0	*	1		1700	205	20.	65.0	7.8
1		0025	6	0.	.0	.0	*	1		0845	106	0.	.0	.0	*	1		1705	206	20.	64.9	7.8
1		0030	7	0.	.0	.0	*	1		0850	107	0.	.0	.0	*	1		1710	207	20.	64.9	7.8
1		0035	8	0.	.0	.0	*	1		0855	108	0.	.0	.0	*	1		1715	208	20.	64.9	7.8
1		0040	9	0.	.0	.0	*	1		0900	109	0.	.0	.0	*	1		1720	209	20.	64.9	7.8
1		0045	10	0.	.0	.0	*	1		0905	110	0.	.0	.0	*	1		1725	210	20.	64.9	7.8
1		0050	11	0.	.0	.0	*	1		0910	111	0.	.0	.0	*	1		1730	211	20.	64.9	7.8
1		0055	12	0.	.0	.0	*	1		0915	112	0.	.0	.0	*	1		1735	212	20.	64.9	7.8
1		0100	13	0.	.0	.0	*	1		0920	113	0.	.0	.0	*	1		1740	213	20.	64.8	7.8
1		0105	14	0.	.0	.0	*	1		0925	114	0.	.0	.0	*	1		1745	214	20.	64.8	7.8
1		0110	15	0.	.0	.0	*	1		0930	115	0.	.0	.0	*	1		1750	215	20.	64.8	7.8
1		0115	16	0.	.0	.0	*	1		0935	116	0.	.0	.0	*	1		1755	216	20.	64.8	7.8
1		0120	17	0.	.0	.0	*	1		0940	117	0.	.0	.0	*	1		1800	217	20.	64.8	7.8
1		0125	18	0.	.0	.0	*	1		0945	118	0.	.0	.0	*	1		1805	218	20.	64.7	7.8
1		0130	19	0.	.0	.0	*	1		0950	119	0.	.0	.0	*	1		1810	219	20.	64.7	7.8
1		0135	20	0.	.0	.0	*	1		0955	120	0.	.0	.0	*	1		1815	220	20.	64.7	7.8
1		0140	21	0.	.0	.0	*	1		1000	121	0.	.0	.0	*	1		1820	221	20.	64.6	7.8
1		0145	22	0.	.0	.0	*	1		1005	122	0.	.0	.0	*	1		1825	222	20.	64.6	7.8
1		0150	23	0.	.0	.0	*	1		1010	123	0.	.0	.0	*	1		1830	223	20.	64.6	7.8
1		0155	24	0.	.0	.0	*	1		1015	124	0.	.0	.0	*	1		1835	224	20.	64.5	7.8
1		0200	25	0.	.0	.0	*	1		1020	125	0.	.0	.0	*	1		1840	225	20.	64.5	7.8
1		0205	26	0.	.0	.0	*	1		1025	126	0.	.0	.0	*	1		1845	226	20.	64.5	7.8
1		0210	27	0.	.0	.0	*	1		1030	127	0.	.0	.0	*	1		1850	227	20.	64.4	7.8
1		0215	28	0.	.0	.0	*	1		1035	128	0.	.0	.0	*	1		1855	228	20.	64.4	7.8
1		0220	29	0.	.0	.0	*	1		1040	129	0.	.0	.0	*	1		1900	229	20.	64.3	7.8
1		0225	30	0.	.0	.0	*	1		1045	130	0.	.0	.0	*	1		1905	230	20.	64.3	7.8
1		0230	31	0.	.0	.0	*	1		1050	131	0.	.0	.0	*	1		1910	231	20.	64.3	7.7
1		0235	32	0.	.0	.0	*	1		1055	132	0.	.0	.0	*	1		1915	232	20.	64.2	7.7
1		0240	33	0.	.0	.0	*	1		1100	133	0.	.0	.0	*	1		1920	233	20.	64.2	7.7
1		0245	34	0.	.0	.0	*	1		1105	134	0.	.0	.0	*	1		1925	234	20.	64.1	7.7
1		0250	35	0.	.0	.0	*	1		1110	135	0.	.0	.0	*	1		1930	235	20.	64.1	7.7
1		0255	36	0.	.0	.0	*	1		1115	136	0.	.0	.0	*	1		1935	236	20.	64.1	7.7
1		0300	37	0.	.0	.0	*	1		1120	137	0.	.0	.0	*	1		1940	237	20.	64.0	7.7
1		0305	38	0.	.0	.0	*	1		1125	138	0.	.0	.0	*	1		1945	238	20.	64.0	7.7
1		0310	39	0.	.0	.0	*	1		1130	139	0.	.0	.0	*	1		1950	239	20.	63.9	7.7
1		0315	40	0.	.0	.0	*	1		1135	140	0.	.0	.0	*	1		1955	240	20.	63.9	7.7
1		0320	41	0.	.0	.0	*	1		1140	141	0.	.0	.0	*	1		2000	241	20.	63.8	7.7
1		0325	42	0.	.0	.0	*	1		1145	142	0.	.0	.0	*	1		2005	242	20.	63.8	7.7
1		0330	43	0.	.0	.0	*	1		1150	143	0.	.0	.0	*	1		2010	243	20.	63.7	7.7
1		0335	44	0.	.0	.0	*	1		1155	144	1.	.8	.1	*	1		2015	244	20.	63.7	7.7
1		0340	45	0.	.0	.0	*	1		1200	145	7.	5.1	.7	*	1		2020	245	20.	63.6	7.7
1		0345	46	0.	.0	.0	*	1		1205	146	18.	13.2	1.8	*	1		2025	246	20.	63.6	7.7
1		0350	47	0.	.0	.0	*	1		1210	147	20.	22.5	2.9	*	1		2030	247	20.	63.5	7.7
1		0355	48	0.	.0	.0	*	1		1215	148	20.	31.4	4.0	*	1		2035	248	20.	63.4	7.7
1		0400	49	0.	.0	.0	*	1		1220	149	20.	38.8	4.9	*	1		2040	249	20.	63.4	7.7
1		0405	50	0.	.0	.0	*	1		1225	150	20.	44.7	5.6	*	1		2045	250	20.	63.3	7.6
1		0410	51	0.	.0	.0	*	1		1230	151	20.	49.1	6.1	*	1		2050	251	20.	63.2	7.6
1		0415	52	0.	.0	.0	*	1		1235	152	20.	52.4	6.5	*	1		2055	252	20.	63.2	7.6
1		0420	53	0.	.0	.0	*	1		1240	153	20.	54.8	6.7	*	1		2100	253	20.	63.1	7.6
1		0425	54	0.	.0	.0	*	1		1245	154	20.	56.6	6.9	*	1		2105	254	20.	63.0	7.6

1		0430	55	0.	.0	.0	*	1		1250	155	20.	58.0	7.1	*	1		2110	255	20.	63.0	7.6
1		0435	56	0.	.0	.0	*	1		1255	156	20.	59.0	7.2	*	1		2115	256	20.	62.9	7.6
1		0440	57	0.	.0	.0	*	1		1300	157	20.	59.9	7.3	*	1		2120	257	20.	62.9	7.6
1		0445	58	0.	.0	.0	*	1		1305	158	20.	60.5	7.3	*	1		2125	258	20.	62.8	7.6
1		0450	59	0.	.0	.0	*	1		1310	159	20.	61.1	7.4	*	1		2130	259	20.	62.7	7.6
1		0455	60	0.	.0	.0	*	1		1315	160	20.	61.5	7.5	*	1		2135	260	20.	62.7	7.6
1		0500	61	0.	.0	.0	*	1		1320	161	20.	61.9	7.5	*	1		2140	261	20.	62.6	7.6
1		0505	62	0.	.0	.0	*	1		1325	162	20.	62.2	7.5	*	1		2145	262	20.	62.5	7.6
1		0510	63	0.	.0	.0	*	1		1330	163	20.	62.4	7.6	*	1		2150	263	20.	62.5	7.6
1		0515	64	0.	.0	.0	*	1		1335	164	20.	62.7	7.6	*	1		2155	264	20.	62.4	7.5
1		0520	65	0.	.0	.0	*	1		1340	165	20.	62.9	7.6	*	1		2200	265	20.	62.3	7.5
1		0525	66	0.	.0	.0	*	1		1345	166	20.	63.1	7.6	*	1		2205	266	20.	62.3	7.5
1		0530	67	0.	.0	.0	*	1		1350	167	20.	63.3	7.6	*	1		2210	267	20.	62.2	7.5
1		0535	68	0.	.0	.0	*	1		1355	168	20.	63.4	7.7	*	1		2215	268	20.	62.1	7.5
1		0540	69	0.	.0	.0	*	1		1400	169	20.	63.6	7.7	*	1		2220	269	20.	62.1	7.5
1		0545	70	0.	.0	.0	*	1		1405	170	20.	63.7	7.7	*	1		2225	270	20.	62.0	7.5
1		0550	71	0.	.0	.0	*	1		1410	171	20.	63.8	7.7	*	1		2230	271	20.	61.9	7.5
1		0555	72	0.	.0	.0	*	1		1415	172	20.	63.9	7.7	*	1		2235	272	20.	61.9	7.5
1		0600	73	0.	.0	.0	*	1		1420	173	20.	64.1	7.7	*	1		2240	273	20.	61.8	7.5
1		0605	74	0.	.0	.0	*	1		1425	174	20.	64.1	7.7	*	1		2245	274	20.	61.8	7.5
1		0610	75	0.	.0	.0	*	1		1430	175	20.	64.2	7.7	*	1		2250	275	20.	61.7	7.5
1		0615	76	0.	.0	.0	*	1		1435	176	20.	64.3	7.8	*	1		2255	276	20.	61.6	7.5
1		0620	77	0.	.0	.0	*	1		1440	177	20.	64.4	7.8	*	1		2300	277	20.	61.6	7.5
1		0625	78	0.	.0	.0	*	1		1445	178	20.	64.4	7.8	*	1		2305	278	20.	61.5	7.4
1		0630	79	0.	.0	.0	*	1		1450	179	20.	64.5	7.8	*	1		2310	279	20.	61.4	7.4
1		0635	80	0.	.0	.0	*	1		1455	180	20.	64.6	7.8	*	1		2315	280	20.	61.4	7.4
1		0640	81	0.	.0	.0	*	1		1500	181	20.	64.6	7.8	*	1		2320	281	20.	61.3	7.4
1		0645	82	0.	.0	.0	*	1		1505	182	20.	64.6	7.8	*	1		2325	282	20.	61.2	7.4
1		0650	83	0.	.0	.0	*	1		1510	183	20.	64.7	7.8	*	1		2330	283	20.	61.2	7.4
1		0655	84	0.	.0	.0	*	1		1515	184	20.	64.7	7.8	*	1		2335	284	20.	61.1	7.4
1		0700	85	0.	.0	.0	*	1		1520	185	20.	64.7	7.8	*	1		2340	285	20.	61.0	7.4
1		0705	86	0.	.0	.0	*	1		1525	186	20.	64.8	7.8	*	1		2345	286	20.	61.0	7.4
1		0710	87	0.	.0	.0	*	1		1530	187	20.	64.8	7.8	*	1		2350	287	20.	60.9	7.4
1		0715	88	0.	.0	.0	*	1		1535	188	20.	64.8	7.8	*	1		2355	288	20.	60.8	7.4
1		0720	89	0.	.0	.0	*	1		1540	189	20.	64.8	7.8	*	2		0000	289	20.	60.8	7.4
1		0725	90	0.	.0	.0	*	1		1545	190	20.	64.9	7.8	*	2		0005	290	20.	60.7	7.4
1		0730	91	0.	.0	.0	*	1		1550	191	20.	64.9	7.8	*	2		0010	291	20.	60.6	7.4
1		0735	92	0.	.0	.0	*	1		1555	192	20.	64.9	7.8	*	2		0015	292	20.	60.5	7.3
1		0740	93	0.	.0	.0	*	1		1600	193	20.	64.9	7.8	*	2		0020	293	20.	60.4	7.3
1		0745	94	0.	.0	.0	*	1		1605	194	20.	64.9	7.8	*	2		0025	294	20.	60.3	7.3
1		0750	95	0.	.0	.0	*	1		1610	195	20.	64.9	7.8	*	2		0030	295	20.	60.2	7.3
1		0755	96	0.	.0	.0	*	1		1615	196	20.	64.9	7.8	*	2		0035	296	20.	60.1	7.3
1		0800	97	0.	.0	.0	*	1		1620	197	20.	64.9	7.8	*	2		0040	297	20.	59.9	7.3
1		0805	98	0.	.0	.0	*	1		1625	198	20.	64.9	7.8	*	2		0045	298	20.	59.8	7.3
1		0810	99	0.	.0	.0	*	1		1630	199	20.	65.0	7.8	*	2		0050	299	20.	59.7	7.2
1		0815	100	0.	.0	.0	*	1		1635	200	20.	65.0	7.8	*	2		0055	300	20.	59.5	7.2

****

```
  PEAK FLOW      TIME                              MAXIMUM AVERAGE FLOW
                                         6-HR          24-HR         72-HR      24.92-HR

+   (CFS)        (HR)
                              (CFS)
+      20.       12.17                    20.           11.           10.           10.
                           (INCHES)     .202          .434          .434          .434
                            (AC-FT)      10.           21.           21.           21.

 PEAK STORAGE    TIME                             MAXIMUM AVERAGE STORAGE
                                         6-HR          24-HR         72-HR      24.92-HR

+  (AC-FT)       (HR)
       65.      16.75                     65.           33.           32.           32.

  PEAK STAGE     TIME                              MAXIMUM AVERAGE STAGE
                                         6-HR          24-HR         72-HR      24.92-HR

+   (FEET)       (HR)
      7.83      16.75                    7.78          4.02          3.87          3.87

                       CUMULATIVE AREA =      .92 SQ MI
```

*** ***

```
                ***************
                *             *
126 KK          *   ROA51A    *
                *             *
                ***************
                          ROUTE FLOW FROM DR43C WEST (1ST REACH) ALONG DOBBINS TO 47TH AVENUE

                 HYDROGRAPH ROUTING DATA

128 RS             STORAGE ROUTING
                        NSTPS          2  NUMBER OF SUBREACHES
                        ITYP        ELEV  TYPE OF INITIAL CONDITION
                        RSVRIC     -1.00  INITIAL CONDITION
                        X            .00  WORKING R AND D COEFFICIENT

129 RC             NORMAL DEPTH CHANNEL
                        ANL         .035  LEFT OVERBANK N-VALUE
                        ANCH        .035  MAIN CHANNEL N-VALUE
                        ANR         .035  RIGHT OVERBANK N-VALUE
                        RLNTH      2790.  REACH LENGTH
                        SEL        .0420  ENERGY SLOPE
```

ELMAX .0 MAX. ELEV. FOR STORAGE/OUTFLOW CALCULATION

CROSS-SECTION DATA

		--- LEFT OVERBANK ---		+ ------ MAIN CHANNEL		------- + --- RIGHT OVERBANK ---			
131 RY	ELEVATION	1013.00	1012.00	1011.00	1008.00	1008.00	1011.00	1012.00	1013.00
130 RX	DISTANCE	.00	40.00	60.00	75.00	80.00	95.00	133.00	153.00

***

COMPUTED STORAGE-OUTFLOW-ELEVATION DATA

STORAGE	.00	.11	.26	.45	.69	.98	1.30	1.68	2.09	2.56
OUTFLOW	.00	5.23	18.63	40.94	73.37	117.15	173.48	243.50	328.32	429.02
ELEVATION	1008.00	1008.26	1008.53	1008.79	1009.05	1009.32	1009.58	1009.84	1010.11	1010.37
STORAGE	3.06	3.61	4.24	5.12	6.25	7.64	9.28	11.20	13.38	15.83
OUTFLOW	546.63	682.16	860.12	1085.35	1356.00	1682.01	2072.84	2538.55	3085.53	3720.69
ELEVATION	1010.63	1010.90	1011.16	1011.42	1011.68	1011.95	1012.21	1012.47	1012.74	1013.00

*** WARNING *** MODIFIED PULS ROUTING MAY BE NUMERICALLY UNSTABLE FOR OUTFLOWS BETWEEN 73. TO 3721.
THE ROUTED HYDROGRAPH SHOULD BE EXAMINED FOR OSCILLATIONS OR OUTFLOWS GREATER THAN PEAK INFLOWS.
THIS CAN BE CORRECTED BY DECREASING THE TIME INTERVAL OR INCREASING STORAGE (USE A LONGER REACH.)

*** *** *** *** ***

HYDROGRAPH AT STATION ROA51A

PEAK FLOW	TIME		MAXIMUM AVERAGE FLOW			
			6-HR	24-HR	72-HR	24.92-HR
+ (CFS)	(HR)					
		(CFS)				
+ 20.	12.67		20.	11.	10.	10.
		(INCHES)	.202	.428	.428	.428
		(AC-FT)	10.	21.	21.	21.

PEAK STORAGE	TIME	MAXIMUM AVERAGE STORAGE			
		6-HR	24-HR	72-HR	24.92-HR
+ (AC-FT)	(HR)				
0.	12.42	0.	0.	0.	0.

PEAK STAGE	TIME	MAXIMUM AVERAGE STAGE			
		6-HR	24-HR	72-HR	24.92-HR
+ (FEET)	(HR)				
1008.54	12.67	1008.54	1008.29	1008.28	1008.28

CUMULATIVE AREA = .92 SQ MI

*** ***

```
              **************
              *            *
132 KK        *   ROA51B   *
              *            *
              **************
```

ROUTE FLOW ALONG DOBBINS FROM 47TH TO 51ST AVENUES
CROSS-SECTION REVISED TO REFLECT TO USE CHANNEL

HYDROGRAPH ROUTING DATA

135 RS STORAGE ROUTING
- NSTPS 2 NUMBER OF SUBREACHES
- ITYP ELEV TYPE OF INITIAL CONDITION
- RSVRIC -1.00 INITIAL CONDITION
- X .00 WORKING R AND D COEFFICIENT

136 RC NORMAL DEPTH CHANNEL
- ANL .035 LEFT OVERBANK N-VALUE
- ANCH .035 MAIN CHANNEL N-VALUE
- ANR .035 RIGHT OVERBANK N-VALUE
- RLNTH 3600. REACH LENGTH
- SEL .0017 ENERGY SLOPE
- ELMAX .0 MAX. ELEV. FOR STORAGE/OUTFLOW CALCULATION

CROSS-SECTION DATA

		--- LEFT OVERBANK ---		+ ------ MAIN CHANNEL		------- + --- RIGHT OVERBANK ---			
138 RY	ELEVATION	1013.00	1012.00	1011.00	1008.00	1008.00	1011.00	1012.00	1013.00
137 RX	DISTANCE	.00	40.00	60.00	75.00	80.00	95.00	133.00	153.00

***

COMPUTED STORAGE-OUTFLOW-ELEVATION DATA

STORAGE	.00	.14	.33	.58	.89	1.26	1.68	2.16	2.70	3.30
OUTFLOW	.00	1.05	3.75	8.24	14.76	23.57	34.90	48.99	66.05	86.31
ELEVATION	1008.00	1008.26	1008.53	1008.79	1009.05	1009.32	1009.58	1009.84	1010.11	1010.37
STORAGE	3.95	4.66	5.48	6.60	8.06	9.85	11.98	14.45	17.26	20.42
OUTFLOW	109.97	137.24	173.04	218.36	272.81	338.40	417.03	510.72	620.77	748.55
ELEVATION	1010.63	1010.90	1011.16	1011.42	1011.68	1011.95	1012.21	1012.47	1012.74	1013.00

*** *** *** *** ***

HYDROGRAPH AT STATION ROA51B

PEAK FLOW	TIME		MAXIMUM AVERAGE FLOW			
			6-HR	24-HR	72-HR	24.92-HR
+ (CFS)	(HR)					
		(CFS)				
+ 20.	15.67		20.	10.	10.	10.
		(INCHES)	.202	.405	.405	.405
		(AC-FT)	10.	20.	20.	20.

PEAK STORAGE	TIME	MAXIMUM AVERAGE STORAGE			
		6-HR	24-HR	72-HR	24.92-HR
+ (AC-FT)	(HR)				
1.	14.50	1.	0.	0.	0.

PEAK STAGE	TIME	MAXIMUM AVERAGE STAGE			
		6-HR	24-HR	72-HR	24.92-HR
+ (FEET)	(HR)				
1009.21	16.33	1009.21	1008.62	1008.59	1008.59

CUMULATIVE AREA = .92 SQ MI

*** ***

```
              *************
              *           *
139 KK        *   OA51B   *
              *           *
              *************
```

SUB-BASIN OA51B
24-HOUR SCS TYPE II RAINFALL WAS USED TO FIND TC & R FOR THIS BASIN
THIS BASIN USED RAINFALL REDUCTION FACTOR OF .934
L = 1.26 Kb = .036 Adj. Slope = 254.0

SUBBASIN RUNOFF DATA

144 BA SUBBASIN CHARACTERISTICS
- TAREA 1.03 SUBBASIN AREA

PRECIPITATION DATA

32 PB STORM 3.92 BASIN TOTAL PRECIPITATION

32 PI INCREMENTAL PRECIPITATION PATTERN

.00	.00	.00	.00	.00	.00	.00	.00	.00	.00
.00	.00	.00	.00	.00	.00	.00	.00	.00	.00
.00	.00	.00	.00	.00	.00	.00	.00	.00	.00
.00	.00	.00	.00	.00	.00	.00	.00	.00	.00
.00	.00	.00	.00	.00	.00	.00	.00	.00	.00
.00	.00	.00	.00	.00	.00	.00	.00	.00	.00
.00	.00	.00	.00	.00	.00	.00	.00	.00	.00
.00	.00	.00	.00	.00	.00	.00	.00	.00	.00
.00	.00	.00	.00	.00	.00	.00	.00	.00	.00
.00	.00	.00	.00	.00	.00	.00	.00	.00	.00
.00	.00	.00	.00	.00	.00	.00	.00	.00	.00
.00	.00	.00	.00	.00	.00	.00	.00	.00	.00
.00	.00	.00	.00	.00	.00	.00	.01	.00	.01
.01	.01	.01	.01	.01	.01	.01	.01	.03	.03
.03	.09	.09	.09	.01	.01	.01	.01	.01	.01
.01	.01	.01	.01	.01	.01	.00	.00	.00	.00
.00	.00	.00	.00	.00	.00	.00	.00	.00	.00
.00	.00	.00	.00	.00	.00	.00	.00	.00	.00
.00	.00	.00	.00	.00	.00	.00	.00	.00	.00
.00	.00	.00	.00	.00	.00	.00	.00	.00	.00
.00	.00	.00	.00	.00	.00	.00	.00	.00	.00
.00	.00	.00	.00	.00	.00	.00	.00	.00	.00
.00	.00	.00	.00	.00	.00	.00	.00	.00	.00
.00	.00	.00	.00	.00	.00	.00	.00	.00	.00
.00	.00	.00	.00	.00	.00	.00	.00	.00	.00
.00	.00	.00	.00	.00	.00	.00	.00	.00	.00
.00	.00	.00	.00	.00	.00	.00	.00	.00	.00
.00	.00	.00	.00	.00	.00	.00	.00	.00	.00
.00	.00	.00	.00	.00	.00	.00	.00		

145 LG GREEN AND AMPT LOSS RATE
- STRTL .27 STARTING LOSS
- DTH .27 MOISTURE DEFICIT
- PSIF 6.00 WETTING FRONT SUCTION
- XKSAT .20 HYDRAULIC CONDUCTIVITY
- RTIMP 30.00 PERCENT IMPERVIOUS AREA

146 UC CLARK UNITGRAPH
- TC .23 TIME OF CONCENTRATION
- R .07 STORAGE COEFFICIENT

147 UA ACCUMULATED-AREA VS. TIME, 11 ORDINATES

.0	5.0	16.0	30.0	65.0	77.0	84.0	90.0	94.0	97.0
100.0									

***

```
                                   UNIT HYDROGRAPH PARAMETERS
                              CLARK    TC=   .23 HR,        R=   .07 HR
                              SNYDER   TP=   .13 HR,       CP=   .67

                                        UNIT HYDROGRAPH
                                   6 END-OF-PERIOD ORDINATES
      1442.     3007.     2272.     905.      253.      71.

   ***         ***          ***          ***          ***

                 HYDROGRAPH AT STATION     OA51B

   TOTAL RAINFALL =   3.92, TOTAL LOSS =   1.85, TOTAL EXCESS =   2.07

  PEAK FLOW      TIME                    MAXIMUM AVERAGE FLOW
                                  6-HR      24-HR      72-HR     24.92-HR
+   (CFS)        (HR)
                          (CFS)
+   2353.       12.00               191.       57.        55.        55.
                        (INCHES)   1.722     2.063      2.064      2.064
                         (AC-FT)     95.      113.       113.       113.

                 CUMULATIVE AREA =    1.03 SQ MI

*** *** *** *** *** *** *** *** *** *** *** *** *** *** *** *** *** *** *** *** *** *** *** *** *** *** *** *** *** *** *** *** *** ***

            **************
            *            *
 149 KK     *    OA51R   *
            *            *
            **************
                    DIVERT RETENTION VOLUME

  DT          DIVERSION
                  ISTAD        RET51  DIVERSION HYDROGRAPH IDENTIFICATION
                  DSTRMX       80.90  MAXIMUM VOLUME TO BE DIVERTED

  DI              INFLOW         .00   1000.00  10000.00

  DQ       DIVERTED FLOW         .00   1000.00  10000.00
                                                         ***

   ***         ***          ***          ***          ***

                 DIVERSION HYDROGRAPH     RET51

  PEAK FLOW      TIME                    MAXIMUM AVERAGE FLOW
                                  6-HR      24-HR      72-HR     24.92-HR
+   (CFS)        (HR)
                          (CFS)
+   2353.       12.00               153.       41.        39.        39.
                        (INCHES)   1.377     1.473      1.473      1.473
                         (AC-FT)     76.       81.        81.        81.

                 CUMULATIVE AREA =    1.03 SQ MI

   ***         ***          ***          ***          ***

                 HYDROGRAPH AT STATION     OA51R

  PEAK FLOW      TIME                    MAXIMUM AVERAGE FLOW
                                  6-HR      24-HR      72-HR     24.92-HR
+   (CFS)        (HR)
                          (CFS)
+    900.       12.17                55.       16.        16.        16.
                        (INCHES)    .498      .591       .591       .591
                         (AC-FT)     27.       32.        32.        32.

                 CUMULATIVE AREA =    1.03 SQ MI

*** *** *** *** *** *** *** *** *** *** *** *** *** *** *** *** *** *** *** *** *** *** *** *** *** *** *** *** *** *** *** *** *** ***

            **************
            *            *
 154 KK     *   DRBASN   *
            *            *
            **************
                    DETENTION BASIN AT THE DOBBINS AND 51ST AVE INTERSECTION.
                    THIS BASIN WAS ADDED FOR THE ADMP ALTERNATE 4
                    BASIN HAS 10 AC TOP, 8.5 AC BOTTOM AND IS 5 FT DEEP WITH 5:1 SIDE SLOPES

 158 KO         OUTPUT CONTROL VARIABLES
                    IPRNT          1  PRINT CONTROL
                    IPLOT          0  PLOT CONTROL
                    QSCAL         0.  HYDROGRAPH PLOT SCALE
```



```
                 HYDROGRAPH ROUTING DATA

 159 RS          STORAGE ROUTING
                      NSTPS          1  NUMBER OF SUBREACHES
                       ITYP       ELEV  TYPE OF INITIAL CONDITION
                     RSVRIC        .00  INITIAL CONDITION
                          X        .00 WORKING R AND D COEFFICIENT

 160 SA                AREA        8.5       8.8       9.1       9.4       9.7      10.0

 161 SQ           DISCHARGE         0.       20.       20.       20.       20.       20.

 162 SE           ELEVATION        .00      2.00      4.00      6.00      5.00     10.00
                                                              ***

                                        COMPUTED STORAGE-ELEVATION DATA

            STORAGE       .00     17.30     35.20     53.70     44.15     93.40
          ELEVATION       .00      2.00      4.00      6.00      5.00     10.00

*********************************************************************************************************

                                        HYDROGRAPH AT STATION    DRBASN

*********************************************************************************************************
```

DA MON	HRMN	ORD	OUTFLOW	STORAGE	STAGE	*	DA MON	HRMN	ORD	OUTFLOW	STORAGE	STAGE	*	DA MON	HRMN	ORD	OUTFLOW	STORAGE	STAGE
1	0000	1	0.	.0	.0	*	1	0820	101	0.	.0	.0	*	1	1640	201	20.	18.5	2.1
1	0005	2	0.	.0	.0	*	1	0825	102	0.	.0	.0	*	1	1645	202	20.	18.4	2.1
1	0010	3	0.	.0	.0	*	1	0830	103	0.	.0	.0	*	1	1650	203	20.	18.4	2.1
1	0015	4	0.	.0	.0	*	1	0835	104	0.	.0	.0	*	1	1655	204	20.	18.4	2.1
1	0020	5	0.	.0	.0	*	1	0840	105	0.	.0	.0	*	1	1700	205	20.	18.4	2.1
1	0025	6	0.	.0	.0	*	1	0845	106	0.	.0	.0	*	1	1705	206	20.	18.3	2.1
1	0030	7	0.	.0	.0	*	1	0850	107	0.	.0	.0	*	1	1710	207	20.	18.3	2.1
1	0035	8	0.	.0	.0	*	1	0855	108	0.	.0	.0	*	1	1715	208	20.	18.3	2.1
1	0040	9	0.	.0	.0	*	1	0900	109	0.	.0	.0	*	1	1720	209	20.	18.2	2.1
1	0045	10	0.	.0	.0	*	1	0905	110	0.	.0	.0	*	1	1725	210	20.	18.2	2.1
1	0050	11	0.	.0	.0	*	1	0910	111	0.	.0	.0	*	1	1730	211	20.	18.2	2.1
1	0055	12	0.	.0	.0	*	1	0915	112	0.	.0	.0	*	1	1735	212	20.	18.1	2.1
1	0100	13	0.	.0	.0	*	1	0920	113	0.	.0	.0	*	1	1740	213	20.	18.1	2.1
1	0105	14	0.	.0	.0	*	1	0925	114	0.	.0	.0	*	1	1745	214	20.	18.1	2.1
1	0110	15	0.	.0	.0	*	1	0930	115	0.	.0	.0	*	1	1750	215	20.	18.1	2.1
1	0115	16	0.	.0	.0	*	1	0935	116	0.	.0	.0	*	1	1755	216	20.	18.0	2.1
1	0120	17	0.	.0	.0	*	1	0940	117	0.	.0	.0	*	1	1800	217	20.	18.0	2.1
1	0125	18	0.	.0	.0	*	1	0945	118	0.	.0	.0	*	1	1805	218	20.	17.9	2.1
1	0130	19	0.	.0	.0	*	1	0950	119	0.	.0	.0	*	1	1810	219	20.	17.9	2.1
1	0135	20	0.	.0	.0	*	1	0955	120	0.	.0	.0	*	1	1815	220	20.	17.8	2.1
1	0140	21	0.	.0	.0	*	1	1000	121	0.	.0	.0	*	1	1820	221	20.	17.8	2.1
1	0145	22	0.	.0	.0	*	1	1005	122	0.	.0	.0	*	1	1825	222	20.	17.7	2.0
1	0150	23	0.	.0	.0	*	1	1010	123	0.	.0	.0	*	1	1830	223	20.	17.7	2.0
1	0155	24	0.	.0	.0	*	1	1015	124	0.	.0	.0	*	1	1835	224	20.	17.6	2.0
1	0200	25	0.	.0	.0	*	1	1020	125	0.	.0	.0	*	1	1840	225	20.	17.6	2.0
1	0205	26	0.	.0	.0	*	1	1025	126	0.	.0	.0	*	1	1845	226	20.	17.5	2.0
1	0210	27	0.	.0	.0	*	1	1030	127	0.	.0	.0	*	1	1850	227	20.	17.5	2.0
1	0215	28	0.	.0	.0	*	1	1035	128	0.	.0	.0	*	1	1855	228	20.	17.4	2.0
1	0220	29	0.	.0	.0	*	1	1040	129	0.	.0	.0	*	1	1900	229	20.	17.3	2.0
1	0225	30	0.	.0	.0	*	1	1045	130	0.	.0	.0	*	1	1905	230	20.	17.3	2.0
1	0230	31	0.	.0	.0	*	1	1050	131	0.	.0	.0	*	1	1910	231	20.	17.2	2.0
1	0235	32	0.	.0	.0	*	1	1055	132	0.	.0	.0	*	1	1915	232	20.	17.2	2.0
1	0240	33	0.	.0	.0	*	1	1100	133	0.	.0	.0	*	1	1920	233	20.	17.1	2.0
1	0245	34	0.	.0	.0	*	1	1105	134	0.	.0	.0	*	1	1925	234	20.	17.1	2.0
1	0250	35	0.	.0	.0	*	1	1110	135	0.	.0	.0	*	1	1930	235	20.	17.0	2.0
1	0255	36	0.	.0	.0	*	1	1115	136	0.	.0	.0	*	1	1935	236	20.	17.0	2.0
1	0300	37	0.	.0	.0	*	1	1120	137	0.	.0	.0	*	1	1940	237	20.	16.9	2.0
1	0305	38	0.	.0	.0	*	1	1125	138	0.	.0	.0	*	1	1945	238	20.	16.9	2.0
1	0310	39	0.	.0	.0	*	1	1130	139	0.	.0	.0	*	1	1950	239	19.	16.8	1.9
1	0315	40	0.	.0	.0	*	1	1135	140	0.	.0	.0	*	1	1955	240	19.	16.8	1.9
1	0320	41	0.	.0	.0	*	1	1140	141	0.	.0	.0	*	1	2000	241	19.	16.7	1.9
1	0325	42	0.	.0	.0	*	1	1145	142	0.	.0	.0	*	1	2005	242	19.	16.7	1.9
1	0330	43	0.	.0	.0	*	1	1150	143	0.	.0	.0	*	1	2010	243	19.	16.6	1.9
1	0335	44	0.	.0	.0	*	1	1155	144	0.	.0	.0	*	1	2015	244	19.	16.5	1.9
1	0340	45	0.	.0	.0	*	1	1200	145	0.	.0	.0	*	1	2020	245	19.	16.5	1.9
1	0345	46	0.	.0	.0	*	1	1205	146	0.	.0	.0	*	1	2025	246	19.	16.4	1.9
1	0350	47	0.	.0	.0	*	1	1210	147	4.	3.1	.4	*	1	2030	247	19.	16.3	1.9
1	0355	48	0.	.0	.0	*	1	1215	148	10.	8.2	1.0	*	1	2035	248	19.	16.3	1.9
1	0400	49	0.	.0	.0	*	1	1220	149	13.	11.3	1.3	*	1	2040	249	19.	16.2	1.9
1	0405	50	0.	.0	.0	*	1	1225	150	15.	12.9	1.5	*	1	2045	250	19.	16.1	1.9
1	0410	51	0.	.0	.0	*	1	1230	151	16.	13.7	1.6	*	1	2050	251	19.	16.1	1.9
1	0415	52	0.	.0	.0	*	1	1235	152	17.	14.3	1.7	*	1	2055	252	19.	16.0	1.9
1	0420	53	0.	.0	.0	*	1	1240	153	17.	14.8	1.7	*	1	2100	253	18.	15.9	1.8
1	0425	54	0.	.0	.0	*	1	1245	154	18.	15.2	1.8	*	1	2105	254	18.	15.9	1.8
1	0430	55	0.	.0	.0	*	1	1250	155	18.	15.6	1.8	*	1	2110	255	18.	15.8	1.8
1	0435	56	0.	.0	.0	*	1	1255	156	18.	15.9	1.8	*	1	2115	256	18.	15.8	1.8
1	0440	57	0.	.0	.0	*	1	1300	157	19.	16.2	1.9	*	1	2120	257	18.	15.7	1.8
1	0445	58	0.	.0	.0	*	1	1305	158	19.	16.5	1.9	*	1	2125	258	18.	15.6	1.8
1	0450	59	0.	.0	.0	*	1	1310	159	19.	16.7	1.9	*	1	2130	259	18.	15.6	1.8
1	0455	60	0.	.0	.0	*	1	1315	160	20.	16.9	2.0	*	1	2135	260	18.	15.5	1.8
1	0500	61	0.	.0	.0	*	1	1320	161	20.	17.1	2.0	*	1	2140	261	18.	15.5	1.8
1	0505	62	0.	.0	.0	*	1	1325	162	20.	17.3	2.0	*	1	2145	262	18.	15.4	1.8
1	0510	63	0.	.0	.0	*	1	1330	163	20.	17.4	2.0	*	1	2150	263	18.	15.3	1.8
1	0515	64	0.	.0	.0	*	1	1335	164	20.	17.6	2.0	*	1	2155	264	18.	15.3	1.8
1	0520	65	0.	.0	.0	*	1	1340	165	20.	17.7	2.0	*	1	2200	265	18.	15.2	1.8
1	0525	66	0.	.0	.0	*	1	1345	166	20.	17.8	2.1	*	1	2205	266	18.	15.2	1.8

```
  1   0530  67     0.      .0     .0 *  1    1350 167    20.    17.9    2.1 *  1    2210 267    17.    15.1    1.7
  1   0535  68     0.      .0     .0 *  1    1355 168    20.    18.0    2.1 *  1    2215 268    17.    15.1    1.7
  1   0540  69     0.      .0     .0 *  1    1400 169    20.    18.1    2.1 *  1    2220 269    17.    15.0    1.7
  1   0545  70     0.      .0     .0 *  1    1405 170    20.    18.2    2.1 *  1    2225 270    17.    14.9    1.7
  1   0550  71     0.      .0     .0 *  1    1410 171    20.    18.2    2.1 *  1    2230 271    17.    14.9    1.7
  1   0555  72     0.      .0     .0 *  1    1415 172    20.    18.3    2.1 *  1    2235 272    17.    14.8    1.7
  1   0600  73     0.      .0     .0 *  1    1420 173    20.    18.3    2.1 *  1    2240 273    17.    14.8    1.7
  1   0605  74     0.      .0     .0 *  1    1425 174    20.    18.4    2.1 *  1    2245 274    17.    14.7    1.7
  1   0610  75     0.      .0     .0 *  1    1430 175    20.    18.4    2.1 *  1    2250 275    17.    14.7    1.7
  1   0615  76     0.      .0     .0 *  1    1435 176    20.    18.5    2.1 *  1    2255 276    17.    14.6    1.7
  1   0620  77     0.      .0     .0 *  1    1440 177    20.    18.5    2.1 *  1    2300 277    17.    14.6    1.7
  1   0625  78     0.      .0     .0 *  1    1445 178    20.    18.5    2.1 *  1    2305 278    17.    14.5    1.7
  1   0630  79     0.      .0     .0 *  1    1450 179    20.    18.5    2.1 *  1    2310 279    17.    14.5    1.7
  1   0635  80     0.      .0     .0 *  1    1455 180    20.    18.5    2.1 *  1    2315 280    17.    14.4    1.7
  1   0640  81     0.      .0     .0 *  1    1500 181    20.    18.6    2.1 *  1    2320 281    17.    14.4    1.7
  1   0645  82     0.      .0     .0 *  1    1505 182    20.    18.6    2.1 *  1    2325 282    17.    14.3    1.7
  1   0650  83     0.      .0     .0 *  1    1510 183    20.    18.6    2.1 *  1    2330 283    17.    14.3    1.7
  1   0655  84     0.      .0     .0 *  1    1515 184    20.    18.6    2.1 *  1    2335 284    16.    14.2    1.6
  1   0700  85     0.      .0     .0 *  1    1520 185    20.    18.6    2.1 *  1    2340 285    16.    14.2    1.6
  1   0705  86     0.      .0     .0 *  1    1525 186    20.    18.6    2.1 *  1    2345 286    16.    14.1    1.6
  1   0710  87     0.      .0     .0 *  1    1530 187    20.    18.6    2.1 *  1    2350 287    16.    14.1    1.6
  1   0715  88     0.      .0     .0 *  1    1535 188    20.    18.6    2.1 *  1    2355 288    16.    14.0    1.6
  1   0720  89     0.      .0     .0 *  1    1540 189    20.    18.6    2.1 *  2    0000 289    16.    14.0    1.6
  1   0725  90     0.      .0     .0 *  1    1545 190    20.    18.6    2.1 *  2    0005 290    16.    13.9    1.6
  1   0730  91     0.      .0     .0 *  1    1550 191    20.    18.6    2.1 *  2    0010 291    16.    13.8    1.6
  1   0735  92     0.      .0     .0 *  1    1555 192    20.    18.6    2.1 *  2    0015 292    16.    13.7    1.6
  1   0740  93     0.      .0     .0 *  1    1600 193    20.    18.6    2.1 *  2    0020 293    16.    13.6    1.6
  1   0745  94     0.      .0     .0 *  1    1605 194    20.    18.5    2.1 *  2    0025 294    16.    13.5    1.6
  1   0750  95     0.      .0     .0 *  1    1610 195    20.    18.5    2.1 *  2    0030 295    15.    13.4    1.5
  1   0755  96     0.      .0     .0 *  1    1615 196    20.    18.5    2.1 *  2    0035 296    15.    13.3    1.5
  1   0800  97     0.      .0     .0 *  1    1620 197    20.    18.5    2.1 *  2    0040 297    15.    13.2    1.5
  1   0805  98     0.      .0     .0 *  1    1625 198    20.    18.5    2.1 *  2    0045 298    15.    13.1    1.5
  1   0810  99     0.      .0     .0 *  1    1630 199    20.    18.5    2.1 *  2    0050 299    15.    13.0    1.5
  1   0815 100     0.      .0     .0 *  1    1635 200    20.    18.5    2.1 *  2    0055 300    15.    12.9    1.5
                                  *                                   *
*************************************************************************************************************

  PEAK FLOW      TIME                          MAXIMUM AVERAGE FLOW
                                       6-HR        24-HR       72-HR      24.92-HR
+   (CFS)        (HR)
                             (CFS)
+      20.      13.50                   20.         10.         10.          10.
                           (INCHES)    .180        .357        .357         .357
                            (AC-FT)     10.         20.         20.          20.

  PEAK STORAGE   TIME                          MAXIMUM AVERAGE STORAGE
                                       6-HR        24-HR       72-HR      24.92-HR
+   (AC-FT)      (HR)
       19.      15.42                   18.          9.          8.           8.

  PEAK STAGE     TIME                          MAXIMUM AVERAGE STAGE
                                       6-HR        24-HR       72-HR      24.92-HR
+   (FEET)       (HR)
      2.15      15.42                  2.09        1.01         .97          .97

                           CUMULATIVE AREA =     1.03 SQ MI


*** *** *** *** *** *** *** *** *** *** *** *** *** *** *** *** *** *** *** *** *** *** *** *** *** *** *** *** *** *** *** *** *** ***


            **************
            *            *
  163 KK    *    ER47B   *
            *            *
            **************
                        SUB-BASIN ER47B
                        THIS SUB-BASIN SPLIT FROM OA51B TO ALLOW FOR DETENTION TO BE USED BELOW
                        THE WESTERN CANAL - ALT6A
                        24-HOUR SCS TYPE II RAINFALL WAS USED TO FIND TC & R FOR THIS BASIN
                        THIS BASIN USED RAINFALL REDUCTION FACTOR OF  .934
                          L = 1.26  Kb = .036  Adj. Slope =  254.0

           SUBBASIN RUNOFF DATA

  170 BA     SUBBASIN CHARACTERISTICS
                  TAREA         .34  SUBBASIN AREA

             PRECIPITATION DATA

   32 PB          STORM       3.92  BASIN TOTAL PRECIPITATION

   32 PI        INCREMENTAL PRECIPITATION PATTERN
                  .00     .00     .00     .00     .00     .00     .00     .00     .00     .00
                  .00     .00     .00     .00     .00     .00     .00     .00     .00     .00
                  .00     .00     .00     .00     .00     .00     .00     .00     .00     .00
                  .00     .00     .00     .00     .00     .00     .00     .00     .00     .00
                  .00     .00     .00     .00     .00     .00     .00     .00     .00     .00
                  .00     .00     .00     .00     .00     .00     .00     .00     .00     .00
                  .00     .00     .00     .00     .00     .00     .00     .00     .00     .00
                  .00     .00     .00     .00     .00     .00     .00     .00     .00     .00
                  .00     .00     .00     .00     .00     .00     .00     .00     .00     .00
                  .00     .00     .00     .00     .00     .00     .00     .00     .00     .00
                  .00     .00     .00     .00     .00     .00     .00     .00     .00     .00
```



```
                  .00     .00     .00     .00     .00     .00     .00     .00     .00     .00
                  .00     .00     .00     .00     .00     .00     .00     .01     .00     .01
                  .01     .01     .01     .01     .01     .01     .01     .01     .03     .03
                  .03     .09     .09     .09     .01     .01     .01     .01     .01     .01
                  .01     .01     .01     .01     .01     .01     .00     .00     .00     .00
                  .00     .00     .00     .00     .00     .00     .00     .00     .00     .00
                  .00     .00     .00     .00     .00     .00     .00     .00     .00     .00
                  .00     .00     .00     .00     .00     .00     .00     .00     .00     .00
                  .00     .00     .00     .00     .00     .00     .00     .00     .00     .00
                  .00     .00     .00     .00     .00     .00     .00     .00     .00     .00
                  .00     .00     .00     .00     .00     .00     .00     .00     .00     .00
                  .00     .00     .00     .00     .00     .00     .00     .00     .00     .00
                  .00     .00     .00     .00     .00     .00     .00     .00     .00     .00
                  .00     .00     .00     .00     .00     .00     .00     .00     .00     .00
                  .00     .00     .00     .00     .00     .00     .00     .00     .00     .00
                  .00     .00     .00     .00     .00     .00     .00     .00     .00     .00
                  .00     .00     .00     .00     .00     .00     .00     .00     .00     .00
                  .00     .00     .00     .00     .00     .00     .00     .00

  171 LG        GREEN AND AMPT LOSS RATE
                     STRTL         .27  STARTING LOSS
                       DTH         .27  MOISTURE DEFICIT
                      PSIF        6.00  WETTING FRONT SUCTION
                     XKSAT         .20  HYDRAULIC CONDUCTIVITY
                     RTIMP       30.00  PERCENT IMPERVIOUS AREA

  172 UC        CLARK UNITGRAPH
                        TC         .23  TIME OF CONCENTRATION
                         R         .07  STORAGE COEFFICIENT

  173 UA        ACCUMULATED-AREA VS. TIME,  11 ORDINATES
                   .0      5.0     16.0     30.0     65.0     77.0     84.0     90.0     94.0     97.0
                100.0

                                               ***

                                     UNIT HYDROGRAPH PARAMETERS
                                 CLARK   TC=   .23 HR,        R=   .07 HR
                                SNYDER   TP=   .13 HR,       CP=   .67

                                             UNIT HYDROGRAPH
                                        6 END-OF-PERIOD ORDINATES
          476.      992.      750.      299.       83.       23.

     ***           ***           ***           ***           ***

                      HYDROGRAPH AT STATION     ER47B

    TOTAL RAINFALL =    3.92, TOTAL LOSS =    1.85, TOTAL EXCESS =    2.07

  PEAK FLOW      TIME                          MAXIMUM AVERAGE FLOW
                                       6-HR        24-HR       72-HR      24.92-HR
+   (CFS)        (HR)
                             (CFS)
+     777.      12.00                   63.         19.         18.          18.
                           (INCHES)   1.722       2.063       2.064        2.064
                            (AC-FT)     31.         37.         37.          37.

                         CUMULATIVE AREA =     .34 SQ MI


*** *** *** *** *** *** *** *** *** *** *** *** *** *** *** *** *** *** *** *** *** *** *** *** *** *** *** *** *** *** *** *** *** ***


            **************
            *            *
  175 KK    *   ERBASN   *
            *            *
            **************
                        DETENTION BASIN AT THE ELLIOT AND 47TH AVE INTERSECTION. THE WESTERN CANAL
                        IS USED AS A COLLECTOR FACILITY AND OUTLETS TO THIS DETENTION BASIN. THE
                        BASIN HAS 10 AC TOP, 8.3 AC BOTTOM AND IS 6 FT DEEP WITH 5:1 SIDE SLOPES

  179 KO        OUTPUT CONTROL VARIABLES
                     IPRNT           1  PRINT CONTROL
                     IPLOT           0  PLOT CONTROL
                     QSCAL          0.  HYDROGRAPH PLOT SCALE

              HYDROGRAPH ROUTING DATA

  180 RS        STORAGE ROUTING
                     NSTPS           1  NUMBER OF SUBREACHES
                      ITYP        ELEV  TYPE OF INITIAL CONDITION
                    RSVRIC         .00  INITIAL CONDITION
                         X         .00 WORKING R AND D COEFFICIENT

  181 SA             AREA        8.3       8.6       8.9       9.1       9.4       9.7      10.0

  182 SQ        DISCHARGE         0.       20.       20.       20.       20.       20.       20.

  183 SE        ELEVATION        .00      1.00      2.00      3.00      4.00      5.00      6.00
                                               ***
```

COMPUTED STORAGE-ELEVATION DATA

STORAGE	.00	8.45	17.20	26.20	35.45	45.00	54.85
ELEVATION	.00	1.00	2.00	3.00	4.00	5.00	6.00

HYDROGRAPH AT STATION ERBASN

DA	MON	HRMN	ORD	OUTFLOW	STORAGE	STAGE	DA	MON	HRMN	ORD	OUTFLOW	STORAGE	STAGE	DA	MON	HRMN	ORD	OUTFLOW	STORAGE	STAGE
1		0000	1	0.	.0	.0	1		0820	101	3.	1.5	.2	1		1640	201	20.	24.4	2.8
1		0005	2	0.	.0	.0	1		0825	102	3.	1.5	.2	1		1645	202	20.	24.3	2.8
1		0010	3	0.	.0	.0	1		0830	103	4.	1.5	.2	1		1650	203	20.	24.2	2.8
1		0015	4	0.	.0	.0	1		0835	104	4.	1.5	.2	1		1655	204	20.	24.1	2.8
1		0020	5	0.	.0	.0	1		0840	105	4.	1.5	.2	1		1700	205	20.	24.0	2.8
1		0025	6	0.	.0	.0	1		0845	106	4.	1.6	.2	1		1705	206	20.	23.9	2.7
1		0030	7	0.	.1	.0	1		0850	107	4.	1.6	.2	1		1710	207	20.	23.8	2.7
1		0035	8	0.	.1	.0	1		0855	108	4.	1.6	.2	1		1715	208	20.	23.7	2.7
1		0040	9	0.	.1	.0	1		0900	109	4.	1.6	.2	1		1720	209	20.	23.6	2.7
1		0045	10	0.	.1	.0	1		0905	110	4.	1.7	.2	1		1725	210	20.	23.5	2.7
1		0050	11	0.	.1	.0	1		0910	111	4.	1.7	.2	1		1730	211	20.	23.4	2.7
1		0055	12	0.	.2	.0	1		0915	112	4.	1.7	.2	1		1735	212	20.	23.3	2.7
1		0100	13	0.	.2	.0	1		0920	113	4.	1.7	.2	1		1740	213	20.	23.2	2.7
1		0105	14	0.	.2	.0	1		0925	114	4.	1.8	.2	1		1745	214	20.	23.1	2.7
1		0110	15	1.	.2	.0	1		0930	115	4.	1.8	.2	1		1750	215	20.	23.0	2.6
1		0115	16	1.	.2	.0	1		0935	116	4.	1.8	.2	1		1755	216	20.	22.9	2.6
1		0120	17	1.	.2	.0	1		0940	117	4.	1.9	.2	1		1800	217	20.	22.8	2.6
1		0125	18	1.	.3	.0	1		0945	118	4.	1.9	.2	1		1805	218	20.	22.7	2.6
1		0130	19	1.	.3	.0	1		0950	119	5.	1.9	.2	1		1810	219	20.	22.5	2.6
1		0135	20	1.	.3	.0	1		0955	120	5.	2.0	.2	1		1815	220	20.	22.4	2.6
1		0140	21	1.	.3	.0	1		1000	121	5.	2.0	.2	1		1820	221	20.	22.3	2.6
1		0145	22	1.	.3	.0	1		1005	122	5.	2.0	.2	1		1825	222	20.	22.2	2.6
1		0150	23	1.	.3	.0	1		1010	123	5.	2.0	.2	1		1830	223	20.	22.1	2.5
1		0155	24	1.	.4	.0	1		1015	124	5.	2.1	.2	1		1835	224	20.	22.0	2.5
1		0200	25	1.	.4	.0	1		1020	125	5.	2.1	.3	1		1840	225	20.	21.9	2.5
1		0205	26	1.	.4	.0	1		1025	126	5.	2.2	.3	1		1845	226	20.	21.8	2.5
1		0210	27	1.	.4	.0	1		1030	127	5.	2.2	.3	1		1850	227	20.	21.7	2.5
1		0215	28	1.	.4	.1	1		1035	128	5.	2.3	.3	1		1855	228	20.	21.6	2.5
1		0220	29	1.	.4	.1	1		1040	129	5.	2.3	.3	1		1900	229	20.	21.4	2.5
1		0225	30	1.	.5	.1	1		1045	130	6.	2.4	.3	1		1905	230	20.	21.3	2.5
1		0230	31	1.	.5	.1	1		1050	131	6.	2.4	.3	1		1910	231	20.	21.2	2.4
1		0235	32	1.	.5	.1	1		1055	132	6.	2.5	.3	1		1915	232	20.	21.1	2.4
1		0240	33	1.	.5	.1	1		1100	133	6.	2.6	.3	1		1920	233	20.	21.0	2.4
1		0245	34	1.	.5	.1	1		1105	134	6.	2.7	.3	1		1925	234	20.	20.9	2.4
1		0250	35	1.	.5	.1	1		1110	135	7.	2.8	.3	1		1930	235	20.	20.8	2.4
1		0255	36	1.	.5	.1	1		1115	136	7.	2.9	.3	1		1935	236	20.	20.7	2.4
1		0300	37	1.	.5	.1	1		1120	137	7.	3.0	.4	1		1940	237	20.	20.6	2.4
1		0305	38	1.	.6	.1	1		1125	138	7.	3.1	.4	1		1945	238	20.	20.5	2.4
1		0310	39	1.	.6	.1	1		1130	139	8.	3.2	.4	1		1950	239	20.	20.4	2.4
1		0315	40	1.	.6	.1	1		1135	140	8.	3.5	.4	1		1955	240	20.	20.2	2.3
1		0320	41	1.	.6	.1	1		1140	141	10.	4.2	.5	1		2000	241	20.	20.1	2.3
1		0325	42	1.	.6	.1	1		1145	142	13.	5.5	.7	1		2005	242	20.	20.0	2.3
1		0330	43	1.	.6	.1	1		1150	143	18.	7.5	.9	1		2010	243	20.	19.9	2.3
1		0335	44	1.	.6	.1	1		1155	144	20.	10.7	1.3	1		2015	244	20.	19.8	2.3
1		0340	45	2.	.6	.1	1		1200	145	20.	15.3	1.8	1		2020	245	20.	19.7	2.3
1		0345	46	2.	.6	.1	1		1205	146	20.	20.3	2.3	1		2025	246	20.	19.5	2.3
1		0350	47	2.	.7	.1	1		1210	147	20.	24.0	2.8	1		2030	247	20.	19.4	2.2
1		0355	48	2.	.7	.1	1		1215	148	20.	26.0	3.0	1		2035	248	20.	19.3	2.2
1		0400	49	2.	.7	.1	1		1220	149	20.	26.9	3.1	1		2040	249	20.	19.2	2.2
1		0405	50	2.	.7	.1	1		1225	150	20.	27.3	3.1	1		2045	250	20.	19.1	2.2
1		0410	51	2.	.7	.1	1		1230	151	20.	27.5	3.1	1		2050	251	20.	19.0	2.2
1		0415	52	2.	.7	.1	1		1235	152	20.	27.6	3.2	1		2055	252	20.	18.8	2.2
1		0420	53	2.	.8	.1	1		1240	153	20.	27.6	3.2	1		2100	253	20.	18.7	2.2
1		0425	54	2.	.8	.1	1		1245	154	20.	27.7	3.2	1		2105	254	20.	18.6	2.2
1		0430	55	2.	.8	.1	1		1250	155	20.	27.7	3.2	1		2110	255	20.	18.5	2.1
1		0435	56	2.	.8	.1	1		1255	156	20.	27.7	3.2	1		2115	256	20.	18.4	2.1
1		0440	57	2.	.8	.1	1		1300	157	20.	27.7	3.2	1		2120	257	20.	18.3	2.1
1		0445	58	2.	.8	.1	1		1305	158	20.	27.7	3.2	1		2125	258	20.	18.1	2.1
1		0450	59	2.	.8	.1	1		1310	159	20.	27.7	3.2	1		2130	259	20.	18.0	2.1
1		0455	60	2.	.9	.1	1		1315	160	20.	27.7	3.2	1		2135	260	20.	17.9	2.1
1		0500	61	2.	.9	.1	1		1320	161	20.	27.6	3.2	1		2140	261	20.	17.8	2.1
1		0505	62	2.	.9	.1	1		1325	162	20.	27.6	3.2	1		2145	262	20.	17.7	2.1
1		0510	63	2.	.9	.1	1		1330	163	20.	27.6	3.1	1		2150	263	20.	17.6	2.0
1		0515	64	2.	.9	.1	1		1335	164	20.	27.5	3.1	1		2155	264	20.	17.5	2.0
1		0520	65	2.	.9	.1	1		1340	165	20.	27.5	3.1	1		2200	265	20.	17.3	2.0
1		0525	66	2.	.9	.1	1		1345	166	20.	27.4	3.1	1		2205	266	20.	17.2	2.0
1		0530	67	2.	1.0	.1	1		1350	167	20.	27.4	3.1	1		2210	267	20.	17.1	2.0
1		0535	68	2.	1.0	.1	1		1355	168	20.	27.3	3.1	1		2215	268	20.	17.0	2.0
1		0540	69	2.	1.0	.1	1		1400	169	20.	27.2	3.1	1		2220	269	20.	16.9	2.0
1		0545	70	2.	1.0	.1	1		1405	170	20.	27.2	3.1	1		2225	270	20.	16.8	1.9
1		0550	71	2.	1.0	.1	1		1410	171	20.	27.1	3.1	1		2230	271	20.	16.6	1.9
1		0555	72	2.	1.0	.1	1		1415	172	20.	27.0	3.1	1		2235	272	20.	16.5	1.9
1		0600	73	2.	1.0	.1	1		1420	173	20.	26.9	3.1	1		2240	273	20.	16.4	1.9
1		0605	74	2.	1.0	.1	1		1425	174	20.	26.9	3.1	1		2245	274	20.	16.3	1.9
1		0610	75	2.	1.1	.1	1		1430	175	20.	26.8	3.1	1		2250	275	20.	16.2	1.9
1		0615	76	3.	1.1	.1	1		1435	176	20.	26.7	3.1	1		2255	276	20.	16.1	1.9
1		0620	77	3.	1.1	.1	1		1440	177	20.	26.6	3.0	1		2300	277	20.	15.9	1.9
1		0625	78	3.	1.1	.1	1		1445	178	20.	26.5	3.0	1		2305	278	20.	15.8	1.8
1		0630	79	3.	1.1	.1	1		1450	179	20.	26.5	3.0	1		2310	279	20.	15.7	1.8
1		0635	80	3.	1.1	.1	1		1455	180	20.	26.4	3.0	1		2315	280	20.	15.6	1.8
1		0640	81	3.	1.2	.1	1		1500	181	20.	26.3	3.0	1		2320	281	20.	15.5	1.8
1		0645	82	3.	1.2	.1	1		1505	182	20.	26.2	3.0	1		2325	282	20.	15.4	1.8
1		0650	83	3.	1.2	.1	1		1510	183	20.	26.1	3.0	1		2330	283	20.	15.2	1.8

1		0655	84	3.	1.2	.1	1		1515	184	20.	26.0	3.0	1		2335	284	20.	15.1	1.8
1		0700	85	3.	1.2	.1	1		1520	185	20.	25.9	3.0	1		2340	285	20.	15.0	1.7
1		0705	86	3.	1.2	.1	1		1525	186	20.	25.8	3.0	1		2345	286	20.	14.9	1.7
1		0710	87	3.	1.2	.1	1		1530	187	20.	25.7	2.9	1		2350	287	20.	14.8	1.7
1		0715	88	3.	1.3	.1	1		1535	188	20.	25.6	2.9	1		2355	288	20.	14.7	1.7
1		0720	89	3.	1.3	.2	1		1540	189	20.	25.5	2.9	2		0000	289	20.	14.5	1.7
1		0725	90	3.	1.3	.2	1		1545	190	20.	25.5	2.9	2		0005	290	20.	14.4	1.7
1		0730	91	3.	1.3	.2	1		1550	191	20.	25.4	2.9	2		0010	291	20.	14.3	1.7
1		0735	92	3.	1.3	.2	1		1555	192	20.	25.3	2.9	2		0015	292	20.	14.1	1.7
1		0740	93	3.	1.3	.2	1		1600	193	20.	25.2	2.9	2		0020	293	20.	14.0	1.6
1		0745	94	3.	1.3	.2	1		1605	194	20.	25.1	2.9	2		0025	294	20.	13.9	1.6
1		0750	95	3.	1.4	.2	1		1610	195	20.	25.0	2.9	2		0030	295	20.	13.7	1.6
1		0755	96	3.	1.4	.2	1		1615	196	20.	24.9	2.9	2		0035	296	20.	13.6	1.6
1		0800	97	3.	1.4	.2	1		1620	197	20.	24.8	2.8	2		0040	297	20.	13.5	1.6
1		0805	98	3.	1.4	.2	1		1625	198	20.	24.7	2.8	2		0045	298	20.	13.3	1.6
1		0810	99	3.	1.4	.2	1		1630	199	20.	24.6	2.8	2		0050	299	20.	13.2	1.5
1		0815	100	3.	1.4	.2	1		1635	200	20.	24.5	2.8	2		0055	300	20.	13.0	1.5

PEAK FLOW	TIME		MAXIMUM AVERAGE FLOW			
			6-HR	24-HR	72-HR	24.92-HR
+ (CFS)	(HR)					
		(CFS)				
+ 20.	11.92		20.	12.	12.	12.
		(INCHES)	.547	1.344	1.344	1.344
		(AC-FT)	10.	24.	24.	24.

PEAK STORAGE	TIME	MAXIMUM AVERAGE STORAGE			
		6-HR	24-HR	72-HR	24.92-HR
+ (AC-FT)	(HR)				
28.	12.92	26.	12.	12.	12.

PEAK STAGE	TIME	MAXIMUM AVERAGE STAGE			
		6-HR	24-HR	72-HR	24.92-HR
+ (FEET)	(HR)				
3.16	13.00	2.95	1.42	1.36	1.36

CUMULATIVE AREA = .34 SQ MI

```
184 KK       * RER47B *
```

ROUTE THE OUTFLOW FROM THE ELLIOT ROAD BASIN FROM ELLIOT ROAD TO DOBBINS ROAD

HYDROGRAPH ROUTING DATA

```
186 RS          STORAGE ROUTING
                      NSTPS           2  NUMBER OF SUBREACHES
                       ITYP        ELEV  TYPE OF INITIAL CONDITION
                     RSVRIC       -1.00  INITIAL CONDITION
                          X         .00 WORKING R AND D COEFFICIENT

187 RC          NORMAL DEPTH CHANNEL
                        ANL        .035  LEFT OVERBANK N-VALUE
                       ANCH        .035  MAIN CHANNEL N-VALUE
                        ANR        .035  RIGHT OVERBANK N-VALUE
                      RLNTH       6610.  REACH LENGTH
                        SEL       .0021  ENERGY SLOPE
                      ELMAX  20000000.0  MAX. ELEV. FOR STORAGE/OUTFLOW CALCULATION
```

CROSS-SECTION DATA

		--- LEFT OVERBANK ---		+ ------ MAIN CHANNEL		------- +		--- RIGHT OVERBANK ---	
189 RY	ELEVATION	1013.00	1012.00	1011.00	1008.00	1008.00	1011.00	1012.00	1013.00
188 RX	DISTANCE	.00	40.00	60.00	75.00	80.00	95.00	133.00	153.00

***

COMPUTED STORAGE-OUTFLOW-ELEVATION DATA

```
  STORAGE      .00*************************************************************************
  OUTFLOW      .00*************************************************************************
ELEVATION  1008.001053587.002106165.003158744.004211322.005263901.006316479.007369058.008421636.009474214.00

  STORAGE ***************************************************************************************
  OUTFLOW ***************************************************************************************
ELEVATION ***************************************************************************************
```

*** WARNING *** MODIFIED PULS ROUTING MAY BE NUMERICALLY UNSTABLE FOR OUTFLOWS BETWEEN 0. TO *********
THE ROUTED HYDROGRAPH SHOULD BE EXAMINED FOR OSCILLATIONS OR OUTFLOWS GREATER THAN PEAK INFLOWS.
THIS CAN BE CORRECTED BY DECREASING THE TIME INTERVAL OR INCREASING STORAGE (USE A LONGER REACH.)

HYDROGRAPH AT STATION RER47B

PEAK FLOW TIME MAXIMUM AVERAGE FLOW

```
                                          6-HR        24-HR       72-HR      24.92-HR
+   (CFS)        (HR)
                               (CFS)
+     20.      11.92                       20.          12.         12.          12.
                               (INCHES)   .547        1.344       1.344        1.344
                               (AC-FT)     10.          24.         24.          24.

  PEAK STORAGE   TIME                          MAXIMUM AVERAGE STORAGE
                                          6-HR        24-HR       72-HR      24.92-HR
+   (AC-FT)      (HR)
      0.          .00                       0.           0.          0.           0.

  PEAK STAGE     TIME                          MAXIMUM AVERAGE STAGE
                                          6-HR        24-HR       72-HR      24.92-HR
+   (FEET)       (HR)
   1008.00        .00                   1008.00     1008.00     1008.00      1008.00

                             CUMULATIVE AREA =     .34 SQ MI


*** *** *** *** *** *** *** *** *** *** *** *** *** *** *** *** *** *** *** *** *** *** *** *** *** *** *** *** *** *** *** *** *** ***


                 **************
                 *            *
  190 KK         *    CDR51   *
                 *            *
                 **************
                               COMBINE ROUTED FLOW FROM SUB-BASIN DR43C AND ER47B TO RUNOFF FROM SUB-BASIN
                               OA51B - THIS COMBINATION NOW AT DOBBINS ROAD AND 51ST AVE

  193 HC               HYDROGRAPH COMBINATION
                             ICOMP              3  NUMBER OF HYDROGRAPHS TO COMBINE
                                                                                        ***

         ***             ***             ***             ***             ***

                               HYDROGRAPH AT STATION      CDR51

  PEAK FLOW      TIME                          MAXIMUM AVERAGE FLOW
                                          6-HR        24-HR       72-HR      24.92-HR
+   (CFS)        (HR)
                               (CFS)
+     60.      15.58                       60.          32.         31.          31.
                               (INCHES)   .243         .523        .523         .523
                               (AC-FT)     30.          64.         64.          64.

                             CUMULATIVE AREA =    2.29 SQ MI


*** *** *** *** *** *** *** *** *** *** *** *** *** *** *** *** *** *** *** *** *** *** *** *** *** *** *** *** *** *** *** *** *** ***


                 **************
                 *            *
  194 KK         *   RDR51A   *
                 *            *
                 **************
                               ROUTE FLOWS ALONG 51ST AVE TO A BASIN NEAR 51ST AND BASLINE
                               CROSS-SECTION REVISED TO REFLECT TO USE CHANNEL

                      HYDROGRAPH ROUTING DATA

  197 RS                STORAGE ROUTING
                             NSTPS              2  NUMBER OF SUBREACHES
                              ITYP           ELEV  TYPE OF INITIAL CONDITION
                            RSVRIC          -1.00  INITIAL CONDITION
                                 X            .00  WORKING R AND D COEFFICIENT

  198 RC                NORMAL DEPTH CHANNEL
                               ANL           .035  LEFT OVERBANK N-VALUE
                              ANCH           .035  MAIN CHANNEL N-VALUE
                               ANR           .035  RIGHT OVERBANK N-VALUE
                             RLNTH          2650.  REACH LENGTH
                               SEL          .0053  ENERGY SLOPE
                             ELMAX     20000000.0  MAX. ELEV. FOR STORAGE/OUTFLOW CALCULATION

                                                   CROSS-SECTION DATA
                                   --- LEFT OVERBANK --- + ------ MAIN CHANNEL ------- + --- RIGHT OVERBANK ---
  200 RY          ELEVATION    1013.00    1012.00    1011.00    1008.00    1008.00    1011.00    1012.00    1013.00
  199 RX          DISTANCE         .00      40.00      60.00      75.00      80.00      95.00     133.00     153.00
                                                                                        ***

                                                    COMPUTED STORAGE-OUTFLOW-ELEVATION DATA

                    STORAGE        .009797213.00*****************************************************************************
                    OUTFLOW        .00***********************************************************************************
                  ELEVATION     1008.001053587.002106165.003158744.004211322.005263901.006316479.007369058.008421636.009474214.00

                    STORAGE  ************************************************************************************************
```



```
                    OUTFLOW  ************************************************************************************************
                  ELEVATION  ************************************************************************************************

 *** WARNING ***  MODIFIED PULS ROUTING MAY BE NUMERICALLY UNSTABLE FOR OUTFLOWS BETWEEN             0. TO *********
                  THE ROUTED HYDROGRAPH SHOULD BE EXAMINED FOR OSCILLATIONS OR OUTFLOWS GREATER THAN PEAK INFLOWS.
                  THIS CAN BE CORRECTED BY DECREASING THE TIME INTERVAL OR INCREASING STORAGE (USE A LONGER REACH.)

         ***             ***             ***             ***             ***

                               HYDROGRAPH AT STATION      RDR51A

  PEAK FLOW      TIME                          MAXIMUM AVERAGE FLOW
                                          6-HR        24-HR       72-HR      24.92-HR
+   (CFS)        (HR)
                               (CFS)
+     60.      15.58                       60.          32.         31.          31.
                               (INCHES)   .243         .523        .523         .523
                               (AC-FT)     30.          64.         64.          64.

  PEAK STORAGE   TIME                          MAXIMUM AVERAGE STORAGE
                                          6-HR        24-HR       72-HR      24.92-HR
+   (AC-FT)      (HR)
      0.          .00                       0.           0.          0.           0.

  PEAK STAGE     TIME                          MAXIMUM AVERAGE STAGE
                                          6-HR        24-HR       72-HR      24.92-HR
+   (FEET)       (HR)
   1008.00        .00                   1008.00     1008.00     1008.00      1008.00

                             CUMULATIVE AREA =    2.29 SQ MI


*** *** *** *** *** *** *** *** *** *** *** *** *** *** *** *** *** *** *** *** *** *** *** *** *** *** *** *** *** *** *** *** *** ***


                 **************
                 *            *
  201 KK         *    SM51C   *
                 *            *
                 **************
                               SUB-BASIN SM51C
                               24-HOUR SCS TYPE II RAINFALL WAS USED TO FIND TC & R FOR THIS BASIN
                               THIS BASIN USED RAINFALL REDUCTION FACTOR OF  .934
                                  L = 1.29  Kb = .045  Adj. Slope =   12.0

                      SUBBASIN RUNOFF DATA

  206 BA                SUBBASIN CHARACTERISTICS
                             TAREA            .51  SUBBASIN AREA

                        PRECIPITATION DATA

   32 PB                     STORM           3.92  BASIN TOTAL PRECIPITATION

   32 PI                  INCREMENTAL PRECIPITATION PATTERN
                               .00       .00       .00       .00       .00       .00       .00       .00       .00       .00
                               .00       .00       .00       .00       .00       .00       .00       .00       .00       .00
                               .00       .00       .00       .00       .00       .00       .00       .00       .00       .00
                               .00       .00       .00       .00       .00       .00       .00       .00       .00       .00
                               .00       .00       .00       .00       .00       .00       .00       .00       .00       .00
                               .00       .00       .00       .00       .00       .00       .00       .00       .00       .00
                               .00       .00       .00       .00       .00       .00       .00       .00       .00       .00
                               .00       .00       .00       .00       .00       .00       .00       .00       .00       .00
                               .00       .00       .00       .00       .00       .00       .00       .00       .00       .00
                               .00       .00       .00       .00       .00       .00       .00       .00       .00       .00
                               .00       .00       .00       .00       .00       .00       .00       .00       .00       .00
                               .00       .00       .00       .00       .00       .00       .00       .00       .00       .00
                               .00       .00       .00       .00       .00       .00       .00       .01       .00       .01
                               .01       .01       .01       .01       .01       .01       .01       .01       .03       .03
                               .03       .09       .09       .09       .01       .01       .01       .01       .01       .01
                               .01       .01       .01       .01       .01       .01       .00       .00       .00       .00
                               .00       .00       .00       .00       .00       .00       .00       .00       .00       .00
                               .00       .00       .00       .00       .00       .00       .00       .00       .00       .00
                               .00       .00       .00       .00       .00       .00       .00       .00       .00       .00
                               .00       .00       .00       .00       .00       .00       .00       .00       .00       .00
                               .00       .00       .00       .00       .00       .00       .00       .00       .00       .00
                               .00       .00       .00       .00       .00       .00       .00       .00       .00       .00
                               .00       .00       .00       .00       .00       .00       .00       .00       .00       .00
                               .00       .00       .00       .00       .00       .00       .00       .00       .00       .00
                               .00       .00       .00       .00       .00       .00       .00       .00       .00       .00
                               .00       .00       .00       .00       .00       .00       .00       .00       .00       .00
                               .00       .00       .00       .00       .00       .00       .00       .00       .00       .00
                               .00       .00       .00       .00       .00       .00       .00       .00       .00       .00
                               .00       .00       .00       .00       .00       .00       .00       .00

  207 LG                GREEN AND AMPT LOSS RATE
                             STRTL            .29  STARTING LOSS
                               DTH            .25  MOISTURE DEFICIT
                              PSIF           5.20  WETTING FRONT SUCTION
                             XKSAT            .29  HYDRAULIC CONDUCTIVITY
                             RTIMP          17.00  PERCENT IMPERVIOUS AREA

  208 UC                CLARK UNITGRAPH
```

```
                    TC       1.05  TIME OF CONCENTRATION
                     R        .70  STORAGE COEFFICIENT

209 UA          ACCUMULATED-AREA VS. TIME,  11 ORDINATES
                     .0      5.0     16.0     30.0     65.0     77.0     84.0     90.0     94.0     97.0
                   100.0

                                                 ***

                                          UNIT HYDROGRAPH PARAMETERS
                                    CLARK   TC=  1.05 HR,       R=   .70 HR
                                   SNYDER   TP=   .58 HR,      CP=   .46

                                          UNIT HYDROGRAPH
                                    51 END-OF-PERIOD ORDINATES
                9.      33.      67.     113.     194.     257.     266.     263.     255.     244.
              229.     214.     199.     180.     160.     142.     126.     112.     100.      89.
               79.      70.      62.      55.      49.      44.      39.      34.      31.      27.
               24.      21.      19.      17.      15.      13.      12.      11.       9.       8.
                7.       7.       6.       5.       5.       4.       4.       3.       3.       3.
                2.

    ***             ***              ***              ***              ***

                    HYDROGRAPH AT STATION     SM51C

  TOTAL RAINFALL =    3.92, TOTAL LOSS =     2.28, TOTAL EXCESS =     1.64

 PEAK FLOW     TIME                                MAXIMUM AVERAGE FLOW
                                        6-HR        24-HR        72-HR       24.92-HR
+   (CFS)      (HR)
                (CFS)
+    327.    12.42                       79.          22.          22.          22.
                      (INCHES)        1.441        1.633        1.635        1.635
                      (AC-FT)            39.          45.          45.          45.

                    CUMULATIVE AREA =     .51 SQ MI


*** *** *** *** *** *** *** *** *** *** *** *** *** *** *** *** *** *** *** *** *** *** *** *** *** *** *** *** *** *** *** *** *** *** ***

          ***************
          *             *
211 KK    *     SM51R   *
          *             *
          ***************
                    DIVERT RETENTION VOLUME

      DT          DIVERSION
                     ISTAD      RET51C  DIVERSION HYDROGRAPH IDENTIFICATION
                    DSTRMX       23.00  MAXIMUM VOLUME TO BE DIVERTED

      DI             INFLOW         .00   1000.00  10000.00

      DQ       DIVERTED FLOW        .00   1000.00  10000.00

                                                 ***

       ***             ***              ***              ***              ***

                    DIVERSION HYDROGRAPH    RET51C

 PEAK FLOW     TIME                                MAXIMUM AVERAGE FLOW
                                        6-HR        24-HR        72-HR       24.92-HR
+   (CFS)      (HR)
                (CFS)
+    327.    12.42                       44.          12.          11.          11.
                      (INCHES)        .792         .844         .844         .844
                      (AC-FT)            22.          23.          23.          23.

                    CUMULATIVE AREA =     .51 SQ MI

       ***             ***              ***              ***              ***

                    HYDROGRAPH AT STATION     SM51R

 PEAK FLOW     TIME                                MAXIMUM AVERAGE FLOW
                                        6-HR        24-HR        72-HR       24.92-HR
+   (CFS)      (HR)
                (CFS)
+    248.    12.92                       40.          11.          10.          10.
                      (INCHES)        .737         .791         .791         .791
                      (AC-FT)            20.          22.          22.          22.

                    CUMULATIVE AREA =     .51 SQ MI


*** *** *** *** *** *** *** *** *** *** *** *** *** *** *** *** *** *** *** *** *** *** *** *** *** *** *** *** *** *** *** *** *** *** ***
```



```
          ***************
          *             *
216 KK    *    RB2591   *
          *             *
          ***************
                    ROUTE FLOW FROM COMPUTATION POINT CS51C TO COMPUTATION POINT CB259C
                    FIRST REACH
                    CROSS-SECTION REVISED TO REFLECT DEVELOPED CONDITIONS

               HYDROGRAPH ROUTING DATA

220 RS              STORAGE ROUTING
                         NSTPS          3  NUMBER OF SUBREACHES
                          ITYP       ELEV  TYPE OF INITIAL CONDITION
                         RSVRIC      -1.00  INITIAL CONDITION
                             X         .00 WORKING R AND D COEFFICIENT

221 RC              NORMAL DEPTH CHANNEL
                          ANL        .035  LEFT OVERBANK N-VALUE
                         ANCH        .035  MAIN CHANNEL N-VALUE
                          ANR        .035  RIGHT OVERBANK N-VALUE
                        RLNTH       4200.  REACH LENGTH
                          SEL       .0036  ENERGY SLOPE
                        ELMAX          .0  MAX. ELEV. FOR STORAGE/OUTFLOW CALCULATION

                                   CROSS-SECTION DATA
                          --- LEFT OVERBANK --- + ------ MAIN CHANNEL ------- + --- RIGHT OVERBANK ---
223 RY        ELEVATION   1030.00   1029.00   1028.00   1025.00   1025.00   1028.00   1029.00   1030.00
222 RX        DISTANCE        .00     40.00     60.00     65.00     75.00     80.00    100.00    140.00

                                                 ***

                                   COMPUTED STORAGE-OUTFLOW-ELEVATION DATA

          STORAGE        .00       .26       .55       .86      1.19      1.55      1.92      2.32      2.74      3.19
          OUTFLOW        .00      2.78      8.91     17.71     28.98     42.65     58.68     77.09     97.89    121.14
        ELEVATION    1025.00   1025.26   1025.53   1025.79   1026.05   1026.32   1026.58   1026.84   1027.11   1027.37

          STORAGE       3.65      4.14      4.69      5.49      6.56      7.90      9.59     11.81     14.56     17.84
          OUTFLOW     146.87    175.14    209.81    252.33    303.06    364.07    434.17    521.98    631.71    766.56
        ELEVATION    1027.63   1027.90   1028.16   1028.42   1028.68   1028.95   1029.21   1029.47   1029.74   1030.00

    ***             ***              ***              ***              ***

                    HYDROGRAPH AT STATION    RB2591

 PEAK FLOW     TIME                                MAXIMUM AVERAGE FLOW
                                        6-HR        24-HR        72-HR       24.92-HR
+   (CFS)      (HR)
                (CFS)
+    198.    13.25                       40.          11.          10.          10.
                      (INCHES)        .725         .783         .783         .783
                      (AC-FT)            20.          21.          21.          21.

 PEAK STORAGE  TIME                                MAXIMUM AVERAGE STORAGE
                                        6-HR        24-HR        72-HR       24.92-HR
+ (AC-FT)      (HR)
+     2.    13.25                        0.           0.           0.           0.

 PEAK STAGE    TIME                                MAXIMUM AVERAGE STAGE
                                        6-HR        24-HR        72-HR       24.92-HR
+   (FEET)     (HR)
+ 1028.07    13.25                  1026.03      1025.33      1025.32      1025.32

                    CUMULATIVE AREA =     .51 SQ MI


*** *** *** *** *** *** *** *** *** *** *** *** *** *** *** *** *** *** *** *** *** *** *** *** *** *** *** *** *** *** *** *** *** *** ***

          ***************
          *             *
224 KK    *    C51SM    *
          *             *
          ***************
                    COMBINE SUBARAREA SM51C WITH 51ST AVE CHANNEL

226 HC              HYDROGRAPH COMBINATION
                         ICOMP          2  NUMBER OF HYDROGRAPHS TO COMBINE

                                                 ***

    ***             ***              ***              ***              ***

                    HYDROGRAPH AT STATION    C51SM

 PEAK FLOW     TIME                                MAXIMUM AVERAGE FLOW
                                        6-HR        24-HR        72-HR       24.92-HR
+   (CFS)      (HR)
                (CFS)
+    255.    13.25                       99.          43.          41.          41.
                      (INCHES)        .330         .570         .570         .570
                      (AC-FT)            49.          85.          85.          85.
```

```
                    CUMULATIVE AREA =    2.80 SQ MI


*** *** *** *** *** *** *** *** *** *** *** *** *** *** *** *** *** *** *** *** *** *** *** *** *** *** *** *** *** *** *** *** *** *** ***

          ***************
          *             *
227 KK    *    RDR51B   *
          *             *
          ***************
                    ROUTE FLOWS ALONG 51ST AVE TO A BASIN NEAR 51ST AND BASLINE
                    CROSS-SECTION REVISED TO REFLECT TO USE CHANNEL

               HYDROGRAPH ROUTING DATA

230 RS              STORAGE ROUTING
                         NSTPS          2  NUMBER OF SUBREACHES
                          ITYP       ELEV  TYPE OF INITIAL CONDITION
                        RSVRIC      -1.00  INITIAL CONDITION
                             X        .00 WORKING R AND D COEFFICIENT

231 RC              NORMAL DEPTH CHANNEL
                          ANL       .035  LEFT OVERBANK N-VALUE
                         ANCH       .035  MAIN CHANNEL N-VALUE
                          ANR       .035  RIGHT OVERBANK N-VALUE
                        RLNTH      2650.  REACH LENGTH
                          SEL      .0053  ENERGY SLOPE
                         ELMAX 20000000.0  MAX. ELEV. FOR STORAGE/OUTFLOW CALCULATION

                                   CROSS-SECTION DATA
                          --- LEFT OVERBANK --- + ------ MAIN CHANNEL ------- + --- RIGHT OVERBANK ---
233 RY       ELEVATION   1013.00   1012.00   1011.00   1006.00   1006.00   1011.00   1012.00   1013.00
232 RX       DISTANCE        .00     40.00     50.00     75.00     90.00     95.00    133.00    153.00

                                                 ***

                                   COMPUTED STORAGE-OUTFLOW-ELEVATION DATA

          STORAGE        .009797201.00**********************************************************************************************
          OUTFLOW        .00**********************************************************************************************************
        ELEVATION    1006.001053585.002106163.003158742.004211321.005263899.006316478.007369056.008421635.009474214.00

          STORAGE ******************************************************************************************************************
          OUTFLOW ******************************************************************************************************************
        ELEVATION ******************************************************************************************************************

 *** WARNING *** MODIFIED PULS ROUTING MAY BE NUMERICALLY UNSTABLE FOR OUTFLOWS BETWEEN        0. TO *********
                 THE ROUTED HYDROGRAPH SHOULD BE EXAMINED FOR OSCILLATIONS OR OUTFLOWS GREATER THAN PEAK INFLOWS.
                 THIS CAN BE CORRECTED BY DECREASING THE TIME INTERVAL OR INCREASING STORAGE (USE A LONGER REACH.)

      ***             ***             ***             ***             ***

                         HYDROGRAPH AT STATION   RDR51B

  PEAK FLOW     TIME                          MAXIMUM AVERAGE FLOW
                                      6-HR       24-HR       72-HR     24.92-HR
+   (CFS)       (HR)
                          (CFS)
+     255.     13.25              99.         43.         41.         41.
                       (INCHES)  .330        .570        .570        .570
                       (AC-FT)    49.         85.         85.         85.

 PEAK STORAGE   TIME                          MAXIMUM AVERAGE STORAGE
                                      6-HR       24-HR       72-HR     24.92-HR
+  (AC-FT)      (HR)
       0.        .00               0.          0.          0.          0.

  PEAK STAGE    TIME                          MAXIMUM AVERAGE STAGE
                                      6-HR       24-HR       72-HR     24.92-HR
+   (FEET)      (HR)
   1006.00     13.08          1006.00     1006.00     1006.00     1006.00

                    CUMULATIVE AREA =    2.80 SQ MI


*** *** *** *** *** *** *** *** *** *** *** *** *** *** *** *** *** *** *** *** *** *** *** *** *** *** *** *** *** *** *** *** *** *** ***

          ***************
          *             *
234 KK    *    BRBASN   *
          *             *
          ***************
                    DETENTION BASIN AT THE BASELINE AND LCC INTERSECTION.

                    BASIN HAS 10 AC TOP, 7.7 AC BOTTOM AND IS 8 FT DEEP WITH 5:1 SIDE SLOPES

               HYDROGRAPH ROUTING DATA
```



```
238 RS              STORAGE ROUTING
                         NSTPS          1  NUMBER OF SUBREACHES
                          ITYP       ELEV  TYPE OF INITIAL CONDITION
                        RSVRIC        .00  INITIAL CONDITION
                             X        .00 WORKING R AND D COEFFICIENT

239 SA              AREA          7.7       8.0       8.3       8.6       8.9       9.1       9.4       9.7      10.0

240 SQ              DISCHARGE     0.        50.       50.       50.       50.       50.       50.       50.       50.

241 SE              ELEVATION     .00       1.00      2.00      3.00      4.00      5.00      6.00      7.00      8.00

                                                    ***

                                   COMPUTED STORAGE-ELEVATION DATA

                 STORAGE        .00      7.84     15.97     24.39     33.09     42.09     51.37     60.94     70.80
               ELEVATION        .00      1.00      2.00      3.00      4.00      5.00      6.00      7.00      8.00

      ***             ***             ***             ***             ***

                         HYDROGRAPH AT STATION   BRBASN

  PEAK FLOW     TIME                          MAXIMUM AVERAGE FLOW
                                      6-HR       24-HR       72-HR     24.92-HR
+   (CFS)       (HR)
                          (CFS)
+      50.     13.33              50.         26.         25.         25.
                       (INCHES)  .166        .347        .347        .347
                       (AC-FT)    25.         52.         52.         52.

 PEAK STORAGE   TIME                          MAXIMUM AVERAGE STORAGE
                                      6-HR       24-HR       72-HR     24.92-HR
+  (AC-FT)      (HR)
      33.       24.92              31.         13.         13.         13.

  PEAK STAGE    TIME                          MAXIMUM AVERAGE STAGE
                                      6-HR       24-HR       72-HR     24.92-HR
+   (FEET)      (HR)
      4.04      24.92            3.76        1.63        1.57        1.57

                    CUMULATIVE AREA =    2.80 SQ MI


*** *** *** *** *** *** *** *** *** *** *** *** *** *** *** *** *** *** *** *** *** *** *** *** *** *** *** *** *** *** *** *** *** *** ***

          ***************
          *             *
242 KK    *    DBR51    *
          *             *
          ***************
                    ROUTE FLOWS WEST ALONG BASELINE TO THE LAVEEN CONVEYANCE CHANNEL
                    CROSS-SECTION REVISED TO REFLECT TO USE STORM DRAIN

               HYDROGRAPH ROUTING DATA

245 RK              KINEMATIC WAVE STREAM ROUTING
                             L      2640.  CHANNEL LENGTH
                             S      .0030  SLOPE
                             N       .013  CHANNEL ROUGHNESS COEFFICIENT
                            CA        .00  CONTRIBUTING AREA
                         SHAPE       CIRC  CHANNEL SHAPE
                            WD       4.00  BOTTOM WIDTH OR DIAMETER
                             Z        .00  SIDE SLOPE
                        NDXMIN          2  MINIMUM NUMBER OF DX INTERVALS

                                                    ***

                                   COMPUTED KINEMATIC PARAMETERS
                                        VARIABLE TIME STEP
                                   (DT SHOWN IS A MINIMUM)

                 ELEMENT    ALPHA       M         DT        DX       PEAK    TIME TO      VOLUME    MAXIMUM
                                                                              PEAK                   CELERITY
                                                  (MIN)      (FT)     (CFS)    (MIN)        (IN)      (FPS)

                    MAIN       4.27     1.25      1.68    880.00     50.00   805.57         .35      8.73

 CONTINUITY SUMMARY (AC-FT) - INFLOW= .5184E+02  EXCESS= .0000E+00 OUTFLOW= .5163E+02 BASIN STORAGE= .2459E+00 PERCENT ERROR=   -.1

                                   INTERPOLATED TO SPECIFIED COMPUTATION INTERVAL

                    MAIN       4.27     1.25      5.00                50.00   810.00         .34

      ***             ***             ***             ***             ***

                         HYDROGRAPH AT STATION    DBR51

  PEAK FLOW     TIME                          MAXIMUM AVERAGE FLOW
                                      6-HR       24-HR       72-HR     24.92-HR
+   (CFS)       (HR)
```

		(CFS)				
+ 50.	13.50		50.	26.	25.	25.
		(INCHES)	.166	.345	.345	.345
		(AC-FT)	25.	52.	52.	52.

CUMULATIVE AREA = 2.80 SQ MI

*** ***

```
              *************
              *           *
246 KK        *   CB51D   *
              *           *
              *************
```

COMBINE ROUTED FLOW FROM COMPUTATION POINT CB51C AND FLOWS FROM 51ST AVENUE STORM DRAIN PROPOSED BY THE LAVEEN ADMP

249 HC HYDROGRAPH COMBINATION
ICOMP 2 NUMBER OF HYDROGRAPHS TO COMBINE

***

*** *** *** *** ***

HYDROGRAPH AT STATION CB51D

PEAK FLOW	TIME		MAXIMUM AVERAGE FLOW			
			6-HR	24-HR	72-HR	24.92-HR
+ (CFS)	(HR)					
		(CFS)				
+ 328.	13.58		142.	54.	52.	52.
		(INCHES)	.284	.429	.429	.429
		(AC-FT)	71.	107.	107.	107.

CUMULATIVE AREA = 4.66 SQ MI

*** ***

```
              *************
              *           *
250 KK        *  RB1591   *
              *           *
              *************
```

ROUTE FLOW FROM COMPUTATION POINT CB51C TO COMPUTATION POINT CB159C
MARICOPA DRAIN FROM 51ST AVE TO 59TH AVE.

HYDROGRAPH ROUTING DATA

253 RS STORAGE ROUTING

NSTPS	3	NUMBER OF SUBREACHES
ITYP	ELEV	TYPE OF INITIAL CONDITION
RSVRIC	-1.00	INITIAL CONDITION
X	.00	WORKING R AND D COEFFICIENT

254 RC NORMAL DEPTH CHANNEL

ANL	.030	LEFT OVERBANK N-VALUE
ANCH	.030	MAIN CHANNEL N-VALUE
ANR	.030	RIGHT OVERBANK N-VALUE
RLNTH	5200.	REACH LENGTH
SEL	.0011	ENERGY SLOPE
ELMAX	.0	MAX. ELEV. FOR STORAGE/OUTFLOW CALCULATION

CROSS-SECTION DATA

		--- LEFT OVERBANK --- +		------ MAIN CHANNEL -------		+ --- RIGHT OVERBANK ---			
256 RY	ELEVATION	1000.20	1000.10	1000.00	995.00	995.00	1000.00	1000.10	1000.20
255 RX	DISTANCE	.00	10.00	20.00	45.00	125.00	150.00	160.00	170.00

***

COMPUTED STORAGE-OUTFLOW-ELEVATION DATA

STORAGE	.00	2.66	5.41	8.24	11.17	14.19	17.29	20.49	23.77	27.14
OUTFLOW	.00	15.29	48.80	96.50	156.83	228.94	312.27	406.46	511.26	626.49
ELEVATION	995.00	995.27	995.55	995.82	996.09	996.37	996.64	996.92	997.19	997.46
STORAGE	30.61	34.16	37.80	41.53	45.35	49.26	53.26	57.35	61.53	66.25
OUTFLOW	752.04	887.83	1033.83	1190.01	1356.39	1532.97	1719.81	1916.93	2124.40	2366.50
ELEVATION	997.74	998.01	998.28	998.56	998.83	999.11	999.38	999.65	999.93	1000.20

*** *** *** *** ***

HYDROGRAPH AT STATION RB1591

PEAK FLOW	TIME		MAXIMUM AVERAGE FLOW			
			6-HR	24-HR	72-HR	24.92-HR
+ (CFS)	(HR)					
		(CFS)				

+ 220.	14.33		137.	51.	49.	49.
		(INCHES)	.274	.404	.404	.404
		(AC-FT)	68.	100.	100.	100.

PEAK STORAGE	TIME	MAXIMUM AVERAGE STORAGE			
		6-HR	24-HR	72-HR	24.92-HR
+ (AC-FT)	(HR)				
5.	14.33	3.	1.	1.	1.

PEAK STAGE	TIME	MAXIMUM AVERAGE STAGE			
		6-HR	24-HR	72-HR	24.92-HR
+ (FEET)	(HR)				
996.33	14.33	995.99	995.41	995.40	995.40

CUMULATIVE AREA = 4.66 SQ MI

*** ***

```
              *************
              *           *
257 KK        *  AVR55C   *
              *           *
              *************
```

SUB-BASIN AVR55C
24-HOUR SCS TYPE II RAINFALL WAS USED TO FIND TC & R FOR THIS BASIN
THIS BASIN USED RAINFALL REDUCTION FACTOR OF .934
L = .93 Kb = .051 Adj. Slope = 5.0

SUBBASIN RUNOFF DATA

262 BA SUBBASIN CHARACTERISTICS
TAREA .24 SUBBASIN AREA

PRECIPITATION DATA

32 PB STORM 3.92 BASIN TOTAL PRECIPITATION

32 PI INCREMENTAL PRECIPITATION PATTERN

.00	.00	.00	.00	.00	.00	.00	.00	.00	.00
.00	.00	.00	.00	.00	.00	.00	.00	.00	.00
.00	.00	.00	.00	.00	.00	.00	.00	.00	.00
.00	.00	.00	.00	.00	.00	.00	.00	.00	.00
.00	.00	.00	.00	.00	.00	.00	.00	.00	.00
.00	.00	.00	.00	.00	.00	.00	.00	.00	.00
.00	.00	.00	.00	.00	.00	.00	.00	.00	.00
.00	.00	.00	.00	.00	.00	.00	.00	.00	.00
.00	.00	.00	.00	.00	.00	.00	.00	.00	.00
.00	.00	.00	.00	.00	.00	.00	.00	.00	.00
.00	.00	.00	.00	.00	.00	.00	.00	.00	.00
.00	.00	.00	.00	.00	.00	.00	.00	.00	.00
.00	.00	.00	.00	.00	.00	.00	.01	.00	.01
.01	.01	.01	.01	.01	.01	.01	.01	.03	.03
.03	.09	.09	.09	.01	.01	.01	.01	.01	.01
.01	.01	.01	.01	.01	.01	.00	.00	.00	.00
.00	.00	.00	.00	.00	.00	.00	.00	.00	.00
.00	.00	.00	.00	.00	.00	.00	.00	.00	.00
.00	.00	.00	.00	.00	.00	.00	.00	.00	.00
.00	.00	.00	.00	.00	.00	.00	.00	.00	.00
.00	.00	.00	.00	.00	.00	.00	.00	.00	.00
.00	.00	.00	.00	.00	.00	.00	.00	.00	.00
.00	.00	.00	.00	.00	.00	.00	.00	.00	.00
.00	.00	.00	.00	.00	.00	.00	.00	.00	.00
.00	.00	.00	.00	.00	.00	.00	.00	.00	.00
.00	.00	.00	.00	.00	.00	.00	.00	.00	.00
.00	.00	.00	.00	.00	.00	.00	.00	.00	.00
.00	.00	.00	.00	.00	.00	.00	.00	.00	.00
.00	.00	.00	.00	.00	.00	.00	.00		

263 LG GREEN AND AMPT LOSS RATE

STRTL	.25	STARTING LOSS
DTH	.15	MOISTURE DEFICIT
PSIF	8.00	WETTING FRONT SUCTION
XKSAT	.10	HYDRAULIC CONDUCTIVITY
RTIMP	29.00	PERCENT IMPERVIOUS AREA

264 UC CLARK UNITGRAPH

TC	1.21	TIME OF CONCENTRATION
R	.97	STORAGE COEFFICIENT

265 UA ACCUMULATED-AREA VS. TIME, 11 ORDINATES

.0	5.0	16.0	30.0	65.0	77.0	84.0	90.0	94.0	97.0
100.0									

***

UNIT HYDROGRAPH PARAMETERS
CLARK TC= 1.21 HR, R= .97 HR
SNYDER TP= .68 HR, CP= .41

UNIT HYDROGRAPH
68 END-OF-PERIOD ORDINATES

3.	9.	19.	31.	50.	77.	93.	96.	96.	95.

92.	89.	85.	81.	77.	72.	66.	60.	55.	51.
47.	43.	39.	36.	33.	30.	28.	26.	24.	22.
20.	18.	17.	15.	14.	13.	12.	11.	10.	9.
8.	8.	7.	7.	6.	5.	5.	5.	4.	4.
4.	3.	3.	3.	3.	2.	2.	2.	2.	2.
2.	1.	1.	1.	1.	1.	1.	1.		

```
    ***           ***           ***           ***           ***

                    HYDROGRAPH AT STATION   AVR55C

   TOTAL RAINFALL =    3.92, TOTAL LOSS =    1.61, TOTAL EXCESS =    2.32

  PEAK FLOW      TIME                      MAXIMUM AVERAGE FLOW
                                   6-HR       24-HR       72-HR      24.92-HR
+   (CFS)        (HR)
                            (CFS)
+     152.      12.58                51.         15.         14.         14.
                          (INCHES)  1.958       2.297       2.298       2.298
                           (AC-FT)    25.         30.         30,         30.

                     CUMULATIVE AREA =     .24 SQ MI
```

*** ***

```
               **************
               *            *
 267 KK        *   AVR55R   *
               *            *
               **************
                     DIVERT RETENTION VOLUME

      DT          DIVERSION
                     ISTAD        RET55C  DIVERSION HYDROGRAPH IDENTIFICATION
                    DSTRMX         25.60  MAXIMUM VOLUME TO BE DIVERTED

      DI             INFLOW          .00   1000.00  10000.00

      DQ       DIVERTED FLOW         .00   1000.00  10000.00

                                                                ***

    ***           ***           ***           ***           ***

                    DIVERSION HYDROGRAPH   RET55C

  PEAK FLOW      TIME                      MAXIMUM AVERAGE FLOW
                                   6-HR       24-HR       72-HR      24.92-HR
+   (CFS)        (HR)
                            (CFS)
+     152.      12.58                48.         13.         12.         12.
                          (INCHES)  1.860       1.992       1.992       1.992
                           (AC-FT)    24.         26.         26.         26.

                     CUMULATIVE AREA =     .24 SQ MI

    ***           ***           ***           ***           ***

                    HYDROGRAPH AT STATION   AVR55R

  PEAK FLOW      TIME                      MAXIMUM AVERAGE FLOW
                                   6-HR       24-HR       72-HR      24.92-HR
+   (CFS)        (HR)
                            (CFS)
+      23.      15.17                 7.          2.          2.          2.
                          (INCHES)   .254        .306        .306        .306
                           (AC-FT)     3.          4.          4.          4.

                     CUMULATIVE AREA =     .24 SQ MI
```

*** ***

```
               **************
               *            *
 272 KK        *   RB1592   *
               *            *
               **************
                     ROUTE FLOW FROM SUBASIN AVR55C TO COMPUTATION POINT CB159C
                    ROUTING REVISED TO REFLECT URBANIZED CONDITIONS

            HYDROGRAPH ROUTING DATA

 275 RS        STORAGE ROUTING
                  NSTPS          3  NUMBER OF SUBREACHES
                   ITYP       ELEV  TYPE OF INITIAL CONDITION
                 RSVRIC      -1.00  INITIAL CONDITION
                      X        .00  WORKING R AND D COEFFICIENT
```



```
 276 RC          NORMAL DEPTH CHANNEL
                         ANL        .035  LEFT OVERBANK N-VALUE
                        ANCH        .035  MAIN CHANNEL N-VALUE
                         ANR        .035  RIGHT OVERBANK N-VALUE
                       RLNTH       3600.  REACH LENGTH
                         SEL       .0010  ENERGY SLOPE
                       ELMAX          .0  MAX. ELEV. FOR STORAGE/OUTFLOW CALCULATION

                                     CROSS-SECTION DATA
                      --- LEFT OVERBANK --- + ------ MAIN CHANNEL ------- + --- RIGHT OVERBANK ---
 278 RY         ELEVATION  1004.00   1003.00   1002.00    999.00    999.00   1002.00   1003.00   1004.00
 277 RX          DISTANCE      .00     20.00     40.00     46.00     56.00     62.00     82.00    102.00

                                                ***

                               COMPUTED STORAGE-OUTFLOW-ELEVATION DATA
```

STORAGE	.00	.23	.48	.76	1.05	1.37	1.72	2.08	2.47	2.88
OUTFLOW	.00	1.47	4.74	9.48	15.59	23.06	31.90	42.11	53.74	66.81
ELEVATION	999.00	999.26	999.53	999.79	1000.05	1000.32	1000.58	1000.84	1001.11	1001.37
STORAGE	3.32	3.78	4.30	5.03	5.99	7.17	8.59	10.24	12.11	14.22
OUTFLOW	81.36	97.43	117.30	141.65	170.49	204.92	245.87	294.20	350.69	416.13
ELEVATION	1001.63	1001.90	1002.16	1002.42	1002.68	1002.95	1003.21	1003.47	1003.74	1004.00

```
    ***           ***           ***           ***           ***

                    HYDROGRAPH AT STATION   RB1592

  PEAK FLOW      TIME                      MAXIMUM AVERAGE FLOW
                                   6-HR       24-HR       72-HR      24.92-HR
+   (CFS)        (HR)
                            (CFS)
+      13.      16.25                 6.          2.          2.          2.
                          (INCHES)   .236        .286        .286        .286
                           (AC-FT)     3.          4.          4.          4.

PEAK STORAGE     TIME                    MAXIMUM AVERAGE STORAGE
                                   6-HR       24-HR       72-HR      24.92-HR
+ (AC-FT)        (HR)
        0.      16.17                 0.          0.          0.          0.

 PEAK STAGE      TIME                    MAXIMUM AVERAGE STAGE
                                   6-HR       24-HR       72-HR      24.92-HR
+  (FEET)        (HR)
    999.96      16.25             999.58      999.19      999.18      999.18

                     CUMULATIVE AREA =     .24 SQ MI
```

*** ***

```
               **************
               *            *
 279 KK        *   BR159C   *
               *            *
               **************
                     SUB-BASIN BR159C
                     24-HOUR SCS TYPE II RAINFALL WAS USED TO FIND TC & R FOR THIS BASIN
                     THIS BASIN USED RAINFALL REDUCTION FACTOR OF  .934
                       L = 1.68  Kb = .054  Adj. Slope =    8.0

            SUBBASIN RUNOFF DATA

 284 BA        SUBBASIN CHARACTERISTICS
                  TAREA          .68  SUBBASIN AREA

               PRECIPITATION DATA

 32 PB            STORM         3.92  BASIN TOTAL PRECIPITATION

 32 PI          INCREMENTAL PRECIPITATION PATTERN
```

.00	.00	.00	.00	.00	.00	.00	.00	.00	.00
.00	.00	.00	.00	.00	.00	.00	.00	.00	.00
.00	.00	.00	.00	.00	.00	.00	.00	.00	.00
.00	.00	.00	.00	.00	.00	.00	.00	.00	.00
.00	.00	.00	.00	.00	.00	.00	.00	.00	.00
.00	.00	.00	.00	.00	.00	.00	.00	.00	.00
.00	.00	.00	.00	.00	.00	.00	.00	.00	.00
.00	.00	.00	.00	.00	.00	.00	.00	.00	.00
.00	.00	.00	.00	.00	.00	.00	.00	.00	.00
.00	.00	.00	.00	.00	.00	.00	.00	.00	.00
.00	.00	.00	.00	.00	.00	.00	.00	.00	.00
.00	.00	.00	.00	.00	.00	.00	.00	.00	.00
.00	.00	.00	.00	.00	.00	.00	.01	.00	.01
.01	.01	.01	.01	.01	.01	.01	.01	.03	.03
.03	.09	.09	.09	.01	.01	.01	.01	.01	.01
.01	.01	.01	.01	.01	.01	.00	.00	.00	.00
.00	.00	.00	.00	.00	.00	.00	.00	.00	.00
.00	.00	.00	.00	.00	.00	.00	.00	.00	.00
.00	.00	.00	.00	.00	.00	.00	.00	.00	.00

```
                 .00      .00      .00      .00      .00      .00      .00      .00      .00      .00
                 .00      .00      .00      .00      .00      .00      .00      .00      .00      .00
                 .00      .00      .00      .00      .00      .00      .00      .00      .00      .00
                 .00      .00      .00      .00      .00      .00      .00      .00      .00      .00
                 .00      .00      .00      .00      .00      .00      .00      .00      .00      .00
                 .00      .00      .00      .00      .00      .00      .00      .00      .00      .00
                 .00      .00      .00      .00      .00      .00      .00      .00      .00      .00
                 .00      .00      .00      .00      .00      .00      .00      .00      .00      .00
                 .00      .00      .00      .00      .00      .00      .00      .00      .00      .00
                 .00      .00      .00      .00      .00      .00      .00      .00

285 LG        GREEN AND AMPT LOSS RATE
                STRTL        .17  STARTING LOSS
                  DTH        .25  MOISTURE DEFICIT
                 PSIF       4.80  WETTING FRONT SUCTION
                XKSAT        .42  HYDRAULIC CONDUCTIVITY
                RTIMP      28.00  PERCENT IMPERVIOUS AREA

286 UC        CLARK UNITGRAPH
                   TC       1.50  TIME OF CONCENTRATION
                    R       1.10  STORAGE COEFFICIENT

287 UA        ACCUMULATED-AREA VS. TIME,  11 ORDINATES
                  .0      5.0     16.0     30.0     65.0     77.0     84.0     90.0     94.0     97.0
               100.0

                                              ***

                                    UNIT HYDROGRAPH PARAMETERS
                                CLARK   TC=  1.50 HR,        R=  1.10 HR
                               SNYDER   TP=   .82 HR,       CP=   .43

                                         UNIT HYDROGRAPH
                                    78 END-OF-PERIOD ORDINATES
           5.      17.      34.      56.      80.     117.     174.     216.     230.     234.
         231.     228.     223.     217.     209.     200.     192.     184.     174.     161.
         149.     139.     128.     119.     110.     102.      95.      88.      82.      76.
          70.      65.      60.      56.      52.      48.      44.      41.      38.      35.
          33.      30.      28.      26.      24.      22.      21.      19.      18.      17.
          15.      14.      13.      12.      11.      11.      10.       9.       8.       8.
           7.       7.       6.       6.       5.       5.       5.       4.       4.       4.
           3.       3.       3.       3.       2.       2.       2.       2.

     ***         ***         ***         ***         ***

                 HYDROGRAPH AT STATION    BR159C

   TOTAL RAINFALL =    3.92, TOTAL LOSS =    2.06, TOTAL EXCESS =    1.86

   PEAK FLOW     TIME                         MAXIMUM AVERAGE FLOW
                                       6-HR        24-HR       72-HR      24.92-HR
 +   (CFS)       (HR)
                              (CFS)
 +     300.      12.67                  110.         33.         32.         32.
                           (INCHES)    1.511       1.843       1.844       1.844
                            (AC-FT)      54.         66.         66.         66.

                          CUMULATIVE AREA =     .68 SQ MI


*** *** *** *** *** *** *** *** *** *** *** *** *** *** *** *** *** *** *** *** *** *** *** *** *** *** *** *** *** *** *** *** *** ***

              **************
              *            *
289 KK        *   BR159R   *
              *            *
              **************
                         DIVERT RETENTION VOLUME
                         RELAXED RETENTION VOLUME FROM 43.2 AC-FT

    DT          DIVERSION
                     ISTAD       RET159  DIVERSION HYDROGRAPH IDENTIFICATION
                    DSTRMX        39.50  MAXIMUM VOLUME TO BE DIVERTED

    DI               INFLOW         .00   1000.00  10000.00

    DQ        DIVERTED FLOW         .00   1000.00  10000.00

                                              ***

     ***         ***         ***         ***         ***

                 DIVERSION HYDROGRAPH    RET159

   PEAK FLOW     TIME                         MAXIMUM AVERAGE FLOW
                                       6-HR        24-HR       72-HR      24.92-HR
 +   (CFS)       (HR)
                              (CFS)
 +     300.      12.67                   73.         20.         19.         19.
                           (INCHES)    1.008       1.097       1.097       1.097
                            (AC-FT)      36.         40.         40.         40.

                          CUMULATIVE AREA =     .68 SQ MI
```



```
     ***         ***         ***         ***         ***

                 HYDROGRAPH AT STATION    BR159R

   PEAK FLOW     TIME                         MAXIMUM AVERAGE FLOW
                                       6-HR        24-HR       72-HR      24.92-HR
 +   (CFS)       (HR)
                              (CFS)
 +     193.      13.67                   48.         14.         13.         13.
                           (INCHES)     .666        .746        .746        .746
                            (AC-FT)      24.         27.         27.         27.

                          CUMULATIVE AREA =     .68 SQ MI


*** *** *** *** *** *** *** *** *** *** *** *** *** *** *** *** *** *** *** *** *** *** *** *** *** *** *** *** *** *** *** *** *** ***

              **************
              *            *
295 KK        *   VR59C    *
              *            *
              **************
                         SUB-BASIN VR59C
                         24-HOUR SCS TYPE II RAINFALL WAS USED TO FIND TC & R FOR THIS BASIN
                         THIS BASIN USED RAINFALL REDUCTION FACTOR OF  .934
                           L =  .75  Kb = .083  Adj. Slope =    4.0

              SUBBASIN RUNOFF DATA

300 BA          SUBBASIN CHARACTERISTICS
                      TAREA         .23  SUBBASIN AREA

                PRECIPITATION DATA

32 PB                 STORM        3.92  BASIN TOTAL PRECIPITATION

32 PI             INCREMENTAL PRECIPITATION PATTERN
                 .00      .00      .00      .00      .00      .00      .00      .00      .00      .00
                 .00      .00      .00      .00      .00      .00      .00      .00      .00      .00
                 .00      .00      .00      .00      .00      .00      .00      .00      .00      .00
                 .00      .00      .00      .00      .00      .00      .00      .00      .00      .00
                 .00      .00      .00      .00      .00      .00      .00      .00      .00      .00
                 .00      .00      .00      .00      .00      .00      .00      .00      .00      .00
                 .00      .00      .00      .00      .00      .00      .00      .00      .00      .00
                 .00      .00      .00      .00      .00      .00      .00      .00      .00      .00
                 .00      .00      .00      .00      .00      .00      .00      .00      .00      .00
                 .00      .00      .00      .00      .00      .00      .00      .00      .00      .00
                 .00      .00      .00      .00      .00      .00      .00      .00      .00      .00
                 .00      .00      .00      .00      .00      .00      .00      .00      .00      .00
                 .00      .00      .00      .00      .00      .00      .00      .01      .00      .01
                 .01      .01      .01      .01      .01      .01      .01      .01      .03      .03
                 .03      .09      .09      .09      .01      .01      .01      .01      .01      .01
                 .01      .01      .01      .01      .01      .01      .00      .00      .00      .00
                 .00      .00      .00      .00      .00      .00      .00      .00      .00      .00
                 .00      .00      .00      .00      .00      .00      .00      .00      .00      .00
                 .00      .00      .00      .00      .00      .00      .00      .00      .00      .00
                 .00      .00      .00      .00      .00      .00      .00      .00      .00      .00
                 .00      .00      .00      .00      .00      .00      .00      .00      .00      .00
                 .00      .00      .00      .00      .00      .00      .00      .00      .00      .00
                 .00      .00      .00      .00      .00      .00      .00      .00      .00      .00
                 .00      .00      .00      .00      .00      .00      .00      .00      .00      .00
                 .00      .00      .00      .00      .00      .00      .00      .00      .00      .00
                 .00      .00      .00      .00      .00      .00      .00      .00      .00      .00
                 .00      .00      .00      .00      .00      .00      .00      .00      .00      .00
                 .00      .00      .00      .00      .00      .00      .00      .00      .00      .00
                 .00      .00      .00      .00      .00      .00      .00      .00

301 LG        GREEN AND AMPT LOSS RATE
                STRTL        .13  STARTING LOSS
                  DTH        .15  MOISTURE DEFICIT
                 PSIF       7.00  WETTING FRONT SUCTION
                XKSAT        .18  HYDRAULIC CONDUCTIVITY
                RTIMP       9.00  PERCENT IMPERVIOUS AREA

302 UC        CLARK UNITGRAPH
                   TC       1.50  TIME OF CONCENTRATION
                    R       1.06  STORAGE COEFFICIENT

303 UA        ACCUMULATED-AREA VS. TIME,  11 ORDINATES
                  .0      5.0     16.0     30.0     65.0     77.0     84.0     90.0     94.0     97.0
               100.0

                                              ***

                                    UNIT HYDROGRAPH PARAMETERS
                                CLARK   TC=  1.50 HR,        R=  1.06 HR
                               SNYDER   TP=   .81 HR,       CP=   .44

                                         UNIT HYDROGRAPH
                                    75 END-OF-PERIOD ORDINATES
           2.       6.      12.      20.      28.      42.      62.      77.      82.      83.
```

```
                82.        81.        79.        76.        73.        70.        67.        64.        61.        56.
                52.        48.        44.        41.        38.        35.        32.        30.        28.        25.
                24.        22.        20.        19.        17.        16.        15.        14.        13.        12.
                11.        10.         9.         8.         8.         7.         7.         6.         6.         5.
                 5.         4.         4.         4.         4.         3.         3.         3.         3.         2.
                 2.         2.         2.         2.         2.         1.         1.         1.         1.         1.
                 1.         1.         1.         1.         1.

      ***               ***               ***               ***               ***

                              HYDROGRAPH AT STATION     VR59C

        TOTAL RAINFALL =     3.92, TOTAL LOSS =     2.26, TOTAL EXCESS =     1.67

     PEAK FLOW      TIME                               MAXIMUM AVERAGE FLOW
                                             6-HR          24-HR          72-HR        24.92-HR
  +   (CFS)         (HR)
                                  (CFS)
  +      117.      12.75                      39.           10.            10.            10.
                                (INCHES)    1.545         1.656          1.656          1.656
                                 (AC-FT)      19.           21.            21.            21.

                               CUMULATIVE AREA =     .23 SQ MI


*** *** *** *** *** *** *** *** *** *** *** *** *** *** *** *** *** *** *** *** *** *** *** *** *** *** *** *** *** *** *** *** *** ***


             **************
             *            *
 305 KK      *   RB1593   *
             *            *
             **************
                                ROUTE FLOW FROM SUB-BASIN VR59C TO COMPUTATION POINT CB159C
                                ROUTING REVISED TO REFLECT URBANIZED CONDITIONS

                        HYDROGRAPH ROUTING DATA

 308 RS                  STORAGE ROUTING
                           NSTPS           3  NUMBER OF SUBREACHES
                           ITYP         ELEV  TYPE OF INITIAL CONDITION
                           RSVRIC      -1.00  INITIAL CONDITION
                           X             .00  WORKING R AND D COEFFICIENT

 309 RC                 NORMAL DEPTH CHANNEL
                           ANL          .035  LEFT OVERBANK N-VALUE
                           ANCH         .035  MAIN CHANNEL N-VALUE
                           ANR          .035  RIGHT OVERBANK N-VALUE
                           RLNTH       3000.  REACH LENGTH
                           SEL         .0015  ENERGY SLOPE
                           ELMAX          .0  MAX. ELEV. FOR STORAGE/OUTFLOW CALCULATION

                                          CROSS-SECTION DATA
                               --- LEFT OVERBANK --- + ------ MAIN CHANNEL ------- + --- RIGHT OVERBANK ---
 311 RY          ELEVATION   1002.00   1001.30   1001.00    998.00    998.00   1001.00   1001.30   1002.00
 310 RX          DISTANCE        .00     20.00     40.00     46.00     56.00     62.00     82.00    102.00

                                                                 ***

                                        COMPUTED STORAGE-OUTFLOW-ELEVATION DATA

              STORAGE        .00        .15        .31        .49        .68        .88       1.09       1.31       1.55       1.80
              OUTFLOW        .00       1.24       3.98       7.92      12.97      19.09      26.28      34.53      43.85      54.27
            ELEVATION     998.00     998.21     998.42     998.63     998.84     999.05     999.26     999.47     999.68     999.89

              STORAGE       2.06       2.33       2.62       2.92       3.23       3.66       4.47       5.52       6.73       8.12
              OUTFLOW      65.80      78.45      92.27     107.26     123.45     143.96     170.63     204.76     246.25     295.71
            ELEVATION    1000.11    1000.32    1000.53    1000.74    1000.95    1001.16    1001.37    1001.58    1001.79    1002.00


      ***               ***               ***               ***               ***

                              HYDROGRAPH AT STATION     RB1593

     PEAK FLOW      TIME                               MAXIMUM AVERAGE FLOW
                                             6-HR          24-HR          72-HR        24.92-HR
  +   (CFS)         (HR)
                                  (CFS)
  +      114.      13.00                      39.           10.            10.            10.
                                (INCHES)    1.541         1.650          1.650          1.650
                                 (AC-FT)      19.           21.            21.            21.

    PEAK STORAGE    TIME                               MAXIMUM AVERAGE STORAGE
                                             6-HR          24-HR          72-HR        24.92-HR
  +  (AC-FT)        (HR)
            1.     13.00                       0.            0.             0.             0.

     PEAK STAGE     TIME                               MAXIMUM AVERAGE STAGE
                                             6-HR          24-HR          72-HR        24.92-HR
  +   (FEET)        (HR)
       1000.83     13.00                   999.37        998.45         998.43         998.43

                               CUMULATIVE AREA =     .23 SQ MI
```



```
*** *** *** *** *** *** *** *** *** *** *** *** *** *** *** *** *** *** *** *** *** *** *** *** *** *** *** *** *** *** *** *** ***


             **************
             *            *
 312 KK      *   CB159N   *
             *            *
             **************
                                COMBINE ROUTED FLOWS FROM COMPUTATION POINT CB51C AND SUB-BASINS AVR51C
                                AND VR59C WITH RUNOFF FROM SUB-BASIN BR159C
                                CP (NORTH FLOWS) AT 59TH AVE AND BASELINE RD.

 316 HC              HYDROGRAPH COMBINATION
                           ICOMP           4  NUMBER OF HYDROGRAPHS TO COMBINE

                                                                 ***

      ***               ***               ***               ***               ***

                              HYDROGRAPH AT STATION     CB159N

     PEAK FLOW      TIME                               MAXIMUM AVERAGE FLOW
                                             6-HR          24-HR          72-HR        24.92-HR
  +   (CFS)         (HR)
                                  (CFS)
  +      399.      14.17                     211.           76.            73.            73.
                                (INCHES)     .338          .489           .489           .489
                                 (AC-FT)     105.          151.           151.           151.

                               CUMULATIVE AREA =     5.81 SQ MI


*** *** *** *** *** *** *** *** *** *** *** *** *** *** *** *** *** *** *** *** *** *** *** *** *** *** *** *** *** *** *** *** ***


             **************
             *            *
 317 KK      *   ER55B    *
             *            *
             **************
                                SUB-BASIN ER55B
                                24-HOUR SCS TYPE II RAINFALL WAS USED TO FIND TC & R FOR THIS BASIN
                                THIS BASIN USED RAINFALL REDUCTION FACTOR OF   .934
                                   L =   .79   Kb = .050   Adj. Slope =     8.0

                        SUBBASIN RUNOFF DATA

 322 BA                  SUBBASIN CHARACTERISTICS
                           TAREA          .26  SUBBASIN AREA

                         PRECIPITATION DATA

  32 PB                    STORM         3.92  BASIN TOTAL PRECIPITATION

  32 PI                INCREMENTAL PRECIPITATION PATTERN
                           .00        .00        .00        .00        .00        .00        .00        .00        .00        .00
                           .00        .00        .00        .00        .00        .00        .00        .00        .00        .00
                           .00        .00        .00        .00        .00        .00        .00        .00        .00        .00
                           .00        .00        .00        .00        .00        .00        .00        .00        .00        .00
                           .00        .00        .00        .00        .00        .00        .00        .00        .00        .00
                           .00        .00        .00        .00        .00        .00        .00        .00        .00        .00
                           .00        .00        .00        .00        .00        .00        .00        .00        .00        .00
                           .00        .00        .00        .00        .00        .00        .00        .00        .00        .00
                           .00        .00        .00        .00        .00        .00        .00        .00        .00        .00
                           .00        .00        .00        .00        .00        .00        .00        .00        .00        .00
                           .00        .00        .00        .00        .00        .00        .00        .00        .00        .00
                           .00        .00        .00        .00        .00        .00        .00        .00        .00        .00
                           .00        .00        .00        .00        .00        .00        .00        .01        .00        .01
                           .01        .01        .01        .01        .01        .01        .01        .01        .03        .03
                           .03        .09        .09        .09        .01        .01        .01        .01        .01        .01
                           .01        .01        .01        .01        .01        .01        .00        .00        .00        .00
                           .00        .00        .00        .00        .00        .00        .00        .00        .00        .00
                           .00        .00        .00        .00        .00        .00        .00        .00        .00        .00
                           .00        .00        .00        .00        .00        .00        .00        .00        .00        .00
                           .00        .00        .00        .00        .00        .00        .00        .00        .00        .00
                           .00        .00        .00        .00        .00        .00        .00        .00        .00        .00
                           .00        .00        .00        .00        .00        .00        .00        .00        .00        .00
                           .00        .00        .00        .00        .00        .00        .00        .00        .00        .00
                           .00        .00        .00        .00        .00        .00        .00        .00        .00        .00
                           .00        .00        .00        .00        .00        .00        .00        .00        .00        .00
                           .00        .00        .00        .00        .00        .00        .00        .00        .00        .00
                           .00        .00        .00        .00        .00        .00        .00        .00        .00        .00
                           .00        .00        .00        .00        .00        .00        .00        .00        .00        .00
                           .00        .00        .00        .00        .00        .00        .00        .00

 323 LG               GREEN AND AMPT LOSS RATE
                           STRTL          .26  STARTING LOSS
                           DTH            .26  MOISTURE DEFICIT
                           PSIF          6.00  WETTING FRONT SUCTION
                           XKSAT          .21  HYDRAULIC CONDUCTIVITY
                           RTIMP        27.00  PERCENT IMPERVIOUS AREA
```

```
 324 UC          CLARK UNITGRAPH
                       TC        .91  TIME OF CONCENTRATION
                        R        .60  STORAGE COEFFICIENT

 325 UA          ACCUMULATED-AREA VS. TIME,  11 ORDINATES
                      .0      5.0      16.0      30.0      65.0      77.0      84.0      90.0      94.0      97.0
                   100.0
                                                        ***

                                                 UNIT HYDROGRAPH PARAMETERS
                                          CLARK   TC=   .91 HR,       R=   .60 HR
                                         SNYDER   TP=   .50 HR,      CP=   .47

                                                  UNIT HYDROGRAPH
                                              43 END-OF-PERIOD ORDINATES
                     6.       23.       49.       93.      140.      156.      155.      149.      140.      130.
                   119.      107.       93.       81.       71.       61.       53.       46.       40.       35.
                    31.       27.       23.       20.       18.       15.       13.       12.       10.        9.
                     8.        7.        6.        5.        4.        4.        3.        3.        2.        2.
                     2.        2.        1.
          ***             ***             ***             ***             ***

                                  HYDROGRAPH AT STATION     ER55B

          TOTAL RAINFALL =   3.92, TOTAL LOSS =    1.94, TOTAL EXCESS =    1.99

        PEAK FLOW     TIME                                MAXIMUM AVERAGE FLOW
                                                 6-HR        24-HR       72-HR      24.92-HR
      +   (CFS)       (HR)
                                  (CFS)
      +     205.     12.42                       46.         14.         13.         13.
                                (INCHES)       1.667       1.972       1.974       1.974
                                (AC-FT)           23.         27.         27.         27.

                                CUMULATIVE AREA =     .26 SQ MI


*** *** *** *** *** *** *** *** *** *** *** *** *** *** *** *** *** *** *** *** *** *** *** *** *** *** *** *** *** *** *** *** *** *** *** ***

                  **************
                  *            *
 327 KK           *     ER55R  *
                  *            *
                  **************
                                  DIVERT RETENTION VOLUME

          DT           DIVERSION
                           ISTAD       RET55  DIVERSION HYDROGRAPH IDENTIFICATION
                          DSTRMX       19.20  MAXIMUM VOLUME TO BE DIVERTED

          DI              INFLOW         .00   1000.00  10000.00

          DQ       DIVERTED FLOW         .00   1000.00  10000.00

                                                                                ***

          ***             ***             ***             ***             ***

                                  DIVERSION HYDROGRAPH     RET55

        PEAK FLOW     TIME                                MAXIMUM AVERAGE FLOW
                                                 6-HR        24-HR       72-HR      24.92-HR
      +   (CFS)       (HR)
                                  (CFS)
      +     205.     12.42                       36.         10.          9.          9.
                                (INCHES)       1.315       1.406       1.406       1.406
                                (AC-FT)           18.         19.         19.         19.

                                CUMULATIVE AREA =     .26 SQ MI

          ***             ***             ***             ***             ***

                                  HYDROGRAPH AT STATION     ER55R

        PEAK FLOW     TIME                                MAXIMUM AVERAGE FLOW
                                                 6-HR        24-HR       72-HR      24.92-HR
      +   (CFS)       (HR)
                                  (CFS)
      +      82.     13.25                       13.          4.          4.          4.
                                (INCHES)        .490        .568        .568        .568
                                (AC-FT)            7.          8.          8.          8.

                                CUMULATIVE AREA =     .26 SQ MI


*** *** *** *** *** *** *** *** *** *** *** *** *** *** *** *** *** *** *** *** *** *** *** *** *** *** *** *** *** *** *** *** *** *** *** ***
```



```
                  **************
                  *            *
 332 KK           *     RE59B  *
                  *            *
                  **************
                                  ROUTE FLOWS FROM CONCENTRATION POINT CRE55B TO CP CER59B
                                  ROUTING REVISED TO REFLECT URBANIZED CONDITIONS

                              HYDROGRAPH ROUTING DATA

 335 RS                    STORAGE ROUTING
                                NSTPS          2  NUMBER OF SUBREACHES
                                ITYP       ELEV  TYPE OF INITIAL CONDITION
                               RSVRIC      -1.00  INITIAL CONDITION
                                    X        .00  WORKING R AND D COEFFICIENT
 336 RC                    NORMAL DEPTH CHANNEL
                                  ANL       .035  LEFT OVERBANK N-VALUE
                                 ANCH       .035  MAIN CHANNEL N-VALUE
                                  ANR       .035  RIGHT OVERBANK N-VALUE
                                RLNTH      2600.  REACH LENGTH
                                  SEL      .0020  ENERGY SLOPE
                                ELMAX         .0  MAX. ELEV. FOR STORAGE/OUTFLOW CALCULATION

                                                  CROSS-SECTION DATA
                                    --- LEFT OVERBANK --- + ------ MAIN CHANNEL ------- + --- RIGHT OVERBANK ---
 338 RY                ELEVATION   1026.00   1024.00   1023.00   1020.00   1020.00   1023.00   1024.00   1026.00
 337 RX                DISTANCE        .00     30.00     50.00     55.00     65.00     70.00     90.00    120.00
                                                        ***

                                                  COMPUTED STORAGE-OUTFLOW-ELEVATION DATA

                                STORAGE        .00       .20       .42       .65       .91      1.19      1.49      1.81      2.14      2.50
                                OUTFLOW        .00      2.81      9.03     18.02     29.61     43.73     60.41     79.67    101.56    126.16
                              ELEVATION    1020.00   1020.32   1020.63   1020.95   1021.26   1021.58   1021.89   1022.21   1022.53   1022.84

                                STORAGE       2.90      3.52      4.37      5.46      6.74      8.20      9.84     11.65     13.65     15.82
                                OUTFLOW     156.36    195.06    243.03    303.20    377.48    466.17    570.50    691.62    830.69    988.83
                              ELEVATION    1023.16   1023.47   1023.79   1024.11   1024.42   1024.74   1025.05   1025.37   1025.68   1026.00

          ***             ***             ***             ***             ***

                                  HYDROGRAPH AT STATION     RE59B

        PEAK FLOW     TIME                                MAXIMUM AVERAGE FLOW
                                                 6-HR        24-HR       72-HR      24.92-HR
      +   (CFS)       (HR)
                                  (CFS)
      +      55.     13.67                       13.          4.          4.          4.
                                (INCHES)        .477        .560        .560        .560
                                (AC-FT)            7.          8.          8.          8.

       PEAK STORAGE   TIME                                MAXIMUM AVERAGE STORAGE
                                                 6-HR        24-HR       72-HR      24.92-HR
      +   (AC-FT)     (HR)
                1.    13.67                        0.          0.          0.          0.

        PEAK STAGE    TIME                                MAXIMUM AVERAGE STAGE
                                                 6-HR        24-HR       72-HR      24.92-HR
      +   (FEET)      (HR)
             1021.79  13.67                     1020.69     1020.24     1020.23     1020.23

                                CUMULATIVE AREA =     .26 SQ MI


*** *** *** *** *** *** *** *** *** *** *** *** *** *** *** *** *** *** *** *** *** *** *** *** *** *** *** *** *** *** *** *** *** *** *** ***

                  **************
                  *            *
 339 KK           *     ER59B  *
                  *            *
                  **************
                                  SUB-BASIN ER59B
                                  24-HOUR SCS TYPE II RAINFALL WAS USED TO FIND TC & R FOR THIS BASIN
                                  THIS BASIN USED RAINFALL REDUCTION FACTOR OF  .934
                                    L =  .95  Kb = .030  Adj. Slope =    8.0

                              SUBBASIN RUNOFF DATA

 344 BA                    SUBBASIN CHARACTERISTICS
                                TAREA         .26  SUBBASIN AREA

                              PRECIPITATION DATA

 32 PB                          STORM        3.92  BASIN TOTAL PRECIPITATION

 32 PI                    INCREMENTAL PRECIPITATION PATTERN
                              .00       .00       .00       .00       .00       .00       .00       .00       .00       .00
                              .00       .00       .00       .00       .00       .00       .00       .00       .00       .00
                              .00       .00       .00       .00       .00       .00       .00       .00       .00       .00
```

```
                     .00       .00       .00       .00       .00       .00       .00       .00       .00       .00
                     .00       .00       .00       .00       .00       .00       .00       .00       .00       .00
                     .00       .00       .00       .00       .00       .00       .00       .00       .00       .00
                     .00       .00       .00       .00       .00       .00       .00       .00       .00       .00
                     .00       .00       .00       .00       .00       .00       .00       .00       .00       .00
                     .00       .00       .00       .00       .00       .00       .00       .00       .00       .00
                     .00       .00       .00       .00       .00       .00       .00       .00       .00       .00
                     .00       .00       .00       .00       .00       .00       .00       .00       .00       .00
                     .00       .00       .00       .00       .00       .00       .00       .00       .00       .00
                     .00       .00       .00       .00       .00       .00       .00       .01       .00       .01
                     .01       .01       .01       .01       .01       .01       .01       .01       .03       .03
                     .03       .09       .09       .09       .01       .01       .01       .01       .01       .01
                     .01       .01       .01       .01       .01       .01       .00       .00       .00       .00
                     .00       .00       .00       .00       .00       .00       .00       .00       .00       .00
                     .00       .00       .00       .00       .00       .00       .00       .00       .00       .00
                     .00       .00       .00       .00       .00       .00       .00       .00       .00       .00
                     .00       .00       .00       .00       .00       .00       .00       .00       .00       .00
                     .00       .00       .00       .00       .00       .00       .00       .00       .00       .00
                     .00       .00       .00       .00       .00       .00       .00       .00       .00       .00
                     .00       .00       .00       .00       .00       .00       .00       .00       .00       .00
                     .00       .00       .00       .00       .00       .00       .00       .00       .00       .00
                     .00       .00       .00       .00       .00       .00       .00       .00       .00       .00
                     .00       .00       .00       .00       .00       .00       .00       .00       .00       .00
                     .00       .00       .00       .00       .00       .00       .00       .00       .00       .00
                     .00       .00       .00       .00       .00       .00       .00       .00       .00       .00
                     .00       .00       .00       .00       .00       .00       .00       .00

 345 LG          GREEN AND AMPT LOSS RATE
                       STRTL          .13  STARTING LOSS
                         DTH          .25  MOISTURE DEFICIT
                        PSIF         5.00  WETTING FRONT SUCTION
                      XKSAT           .37  HYDRAULIC CONDUCTIVITY
                       RTIMP        71.00  PERCENT IMPERVIOUS AREA

 346 UC          CLARK UNITGRAPH
                          TC          .67  TIME OF CONCENTRATION
                           R          .49  STORAGE COEFFICIENT

 347 UA          ACCUMULATED-AREA VS. TIME,  11 ORDINATES
                          .0       5.0      16.0      30.0      65.0      77.0      84.0      90.0      94.0      97.0
                       100.0

                                                      ***

                                                  UNIT HYDROGRAPH PARAMETERS
                                              CLARK   TC=    .67 HR,        R=   .49 HR
                                             SNYDER   TP=    .40 HR,       CP=   .48

                                                       UNIT HYDROGRAPH
                                                  35 END-OF-PERIOD ORDINATES
                  12.       46.      113.      180.      199.      191.      178.      163.      144.      122.
                 103.       87.       73.       62.       52.       44.       37.       31.       26.       22.
                  19.       16.       13.       11.       10.        8.        7.        6.        5.        4.
                   3.        3.        2.        2.        2.

      ***          ***          ***          ***          ***

                                 HYDROGRAPH AT STATION     ER59B

     TOTAL RAINFALL =     3.92, TOTAL LOSS =      .82, TOTAL EXCESS =     3.11

   PEAK FLOW       TIME                            MAXIMUM AVERAGE FLOW
                                          6-HR        24-HR        72-HR      24.92-HR
 +   (CFS)         (HR)
                               (CFS)
 +     274.       12.25                    64.          21.          21.          21.
                            (INCHES)    2.281        3.083        3.089        3.089
                             (AC-FT)      32.          43.          43.          43.

                            CUMULATIVE AREA =       .26 SQ MI


*** *** *** *** *** *** *** *** *** *** *** *** *** *** *** *** *** *** *** *** *** *** *** *** *** *** *** *** *** *** *** *** ***

                  **************
                  *            *
 349 KK           *    ER59R   *
                  *            *
                  **************
                             DIVERT RETENTION VOLUME

   DT            DIVERSION
                      ISTAD          RET59  DIVERSION HYDROGRAPH IDENTIFICATION
                     DSTRMX          23.20  MAXIMUM VOLUME TO BE DIVERTED

   DI                INFLOW            .00   1000.00  10000.00

   DQ         DIVERTED FLOW            .00   1000.00  10000.00
                                                                  ***

      ***          ***          ***          ***          ***
```



```
                                 DIVERSION HYDROGRAPH     RET59

   PEAK FLOW       TIME                            MAXIMUM AVERAGE FLOW
                                          6-HR        24-HR        72-HR      24.92-HR
 +   (CFS)         (HR)
                               (CFS)
 +     274.       12.25                    41.          12.          11.          11.
                            (INCHES)    1.460        1.680        1.680        1.680
                             (AC-FT)      20.          23.          23.          23.

                            CUMULATIVE AREA =       .26 SQ MI

      ***          ***          ***          ***          ***

                                 HYDROGRAPH AT STATION     ER59R

   PEAK FLOW       TIME                            MAXIMUM AVERAGE FLOW
                                          6-HR        24-HR        72-HR      24.92-HR
 +   (CFS)         (HR)
                               (CFS)
 +     194.       12.67                    33.          10.           9.           9.
                            (INCHES)    1.184        1.409        1.409        1.409
                             (AC-FT)      16.          19.          19.          19.

                            CUMULATIVE AREA =       .26 SQ MI


*** *** *** *** *** *** *** *** *** *** *** *** *** *** *** *** *** *** *** *** *** *** *** *** *** *** *** *** *** *** *** *** ***

                  **************
                  *            *
 354 KK           *   CER59B   *
                  *            *
                  **************
                             COMBINE ROUTED FLOW FROM CP CRE55B TO RUNOFF FROM SUBBASIN ER59B

 356 HC          HYDROGRAPH COMBINATION
                      ICOMP             2  NUMBER OF HYDROGRAPHS TO COMBINE
                                                      ***

      ***          ***          ***          ***          ***

                                 HYDROGRAPH AT STATION    CER59B

   PEAK FLOW       TIME                            MAXIMUM AVERAGE FLOW
                                          6-HR        24-HR        72-HR      24.92-HR
 +   (CFS)         (HR)
                               (CFS)
 +     194.       12.67                    46.          14.          13.          13.
                            (INCHES)     .826         .987         .987         .987
                             (AC-FT)      23.          27.          27.          27.

                            CUMULATIVE AREA =       .51 SQ MI


*** *** *** *** *** *** *** *** *** *** *** *** *** *** *** *** *** *** *** *** *** *** *** *** *** *** *** *** *** *** *** *** ***

                  **************
                  *            *
 357 KK           *   RIR63B   *
                  *            *
                  **************
                             CP CIR63B IS LOCATED ON THE WESTERN EDGE OF THE STUDY AREA WHICH IS BOUNDED
                             BY A CONCRETE IRRIGATION CANAL AND EARTHEN ROADWAY.  THE IRRIGATION CANAL IS
                             OVERTOPPED AND FLOW CONTINUES ITS NATURAL FLOW PATH TO THE WEST.  THE
                             FLOW IS APPROXIMATELY 45 CFS SOUTH TO MARICOPA DRAIN.

   DT            DIVERSION
                      ISTAD         DIR63B  DIVERSION HYDROGRAPH IDENTIFICATION

   DI                INFLOW            .00     45.00    100.00    200.00    400.00    600.00    800.00

   DQ         DIVERTED FLOW            .00       .00     55.00    155.00    355.00    555.00    755.00
                                                      ***

      ***          ***          ***          ***          ***

                                 DIVERSION HYDROGRAPH     DIR63B

   PEAK FLOW       TIME                            MAXIMUM AVERAGE FLOW
                                          6-HR        24-HR        72-HR      24.92-HR
 +   (CFS)         (HR)
                               (CFS)
 +     149.       12.67                    18.           4.           4.           4.
                            (INCHES)     .322         .322         .322         .322
                             (AC-FT)        9.           9.           9.           9.
```

CUMULATIVE AREA = .51 SQ MI

*** *** *** *** ***

HYDROGRAPH AT STATION RIR63B

PEAK FLOW	TIME		MAXIMUM AVERAGE FLOW			
			6-HR	24-HR	72-HR	24.92-HR
+ (CFS)	(HR)					
		(CFS)				
+ 45.	12.58		28.	9.	9.	9.
		(INCHES)	.503	.665	.665	.665
		(AC-FT)	14.	18.	18.	18.

CUMULATIVE AREA = .51 SQ MI

*** ***

365 KK * IR63B *

SUB-BASIN IR63B
24-HOUR SCS TYPE II RAINFALL WAS USED TO FIND TC & R FOR THIS BASIN
THIS BASIN USED RAINFALL REDUCTION FACTOR OF .934
L = .82 Kb = .034 Adj. Slope = 11.0

SUBBASIN RUNOFF DATA

370 BA SUBBASIN CHARACTERISTICS
TAREA .12 SUBBASIN AREA

PRECIPITATION DATA

32 PB STORM 3.92 BASIN TOTAL PRECIPITATION

32 PI INCREMENTAL PRECIPITATION PATTERN

.00	.00	.00	.00	.00	.00	.00	.00	.00	.00
.00	.00	.00	.00	.00	.00	.00	.00	.00	.00
.00	.00	.00	.00	.00	.00	.00	.00	.00	.00
.00	.00	.00	.00	.00	.00	.00	.00	.00	.00
.00	.00	.00	.00	.00	.00	.00	.00	.00	.00
.00	.00	.00	.00	.00	.00	.00	.00	.00	.00
.00	.00	.00	.00	.00	.00	.00	.00	.00	.00
.00	.00	.00	.00	.00	.00	.00	.00	.00	.00
.00	.00	.00	.00	.00	.00	.00	.00	.00	.00
.00	.00	.00	.00	.00	.00	.00	.00	.00	.00
.00	.00	.00	.00	.00	.00	.00	.00	.00	.00
.00	.00	.00	.00	.00	.00	.00	.00	.00	.00
.00	.00	.00	.00	.00	.00	.00	.01	.00	.01
.01	.01	.01	.01	.01	.01	.01	.01	.03	.03
.03	.09	.09	.09	.01	.01	.01	.01	.01	.01
.01	.01	.01	.01	.01	.01	.00	.00	.00	.00
.00	.00	.00	.00	.00	.00	.00	.00	.00	.00
.00	.00	.00	.00	.00	.00	.00	.00	.00	.00
.00	.00	.00	.00	.00	.00	.00	.00	.00	.00
.00	.00	.00	.00	.00	.00	.00	.00	.00	.00
.00	.00	.00	.00	.00	.00	.00	.00	.00	.00
.00	.00	.00	.00	.00	.00	.00	.00	.00	.00
.00	.00	.00	.00	.00	.00	.00	.00	.00	.00
.00	.00	.00	.00	.00	.00	.00	.00	.00	.00
.00	.00	.00	.00	.00	.00	.00	.00	.00	.00
.00	.00	.00	.00	.00	.00	.00	.00	.00	.00
.00	.00	.00	.00	.00	.00	.00	.00	.00	.00
.00	.00	.00	.00	.00	.00	.00	.00	.00	.00
.00	.00	.00	.00	.00	.00	.00	.00		

371 LG GREEN AND AMPT LOSS RATE
STRTL .13 STARTING LOSS
DTH .25 MOISTURE DEFICIT
PSIF 4.80 WETTING FRONT SUCTION
XKSAT .40 HYDRAULIC CONDUCTIVITY
RTIMP 71.00 PERCENT IMPERVIOUS AREA

372 UC CLARK UNITGRAPH
TC .57 TIME OF CONCENTRATION
R .56 STORAGE COEFFICIENT

373 UA ACCUMULATED-AREA VS. TIME, 11 ORDINATES

.0	5.0	16.0	30.0	65.0	77.0	84.0	90.0	94.0	97.0
100.0									

***

UNIT HYDROGRAPH PARAMETERS
CLARK TC= .57 HR, R= .56 HR
SNYDER TP= .36 HR, CP= .41

UNIT HYDROGRAPH
39 END-OF-PERIOD ORDINATES

7.	25.	61.	88.	90.	87.	81.	72.	62.	54.
46.	40.	34.	30.	25.	22.	19.	16.	14.	12.
10.	9.	8.	7.	6.	5.	4.	4.	3.	3.
2.	2.	2.	2.	1.	1.	1.	1.	1.	

*** *** *** *** ***

HYDROGRAPH AT STATION IR63B

TOTAL RAINFALL = 3.92, TOTAL LOSS = .82, TOTAL EXCESS = 3.10

PEAK FLOW	TIME		MAXIMUM AVERAGE FLOW			
			6-HR	24-HR	72-HR	24.92-HR
+ (CFS)	(HR)					
		(CFS)				
+ 127.	12.25		30.	10.	10.	10.
		(INCHES)	2.274	3.075	3.082	3.082
		(AC-FT)	15.	20.	20.	20.

CUMULATIVE AREA = .12 SQ MI

*** ***

375 KK * IR63 *

DIVERT RETENTION VOLUME

DT DIVERSION
ISTAD RET63 DIVERSION HYDROGRAPH IDENTIFICATION
DSTRMX 11.20 MAXIMUM VOLUME TO BE DIVERTED

DI INFLOW .00 1000.00 10000.00

DQ DIVERTED FLOW .00 1000.00 10000.00

***

*** *** *** *** ***

DIVERSION HYDROGRAPH RET63

PEAK FLOW	TIME		MAXIMUM AVERAGE FLOW			
			6-HR	24-HR	72-HR	24.92-HR
+ (CFS)	(HR)					
		(CFS)				
+ 127.	12.25		20.	6.	5.	5.
		(INCHES)	1.471	1.694	1.694	1.694
		(AC-FT)	10.	11.	11.	11.

CUMULATIVE AREA = .12 SQ MI

*** *** *** *** ***

HYDROGRAPH AT STATION IR63

PEAK FLOW	TIME		MAXIMUM AVERAGE FLOW			
			6-HR	24-HR	72-HR	24.92-HR
+ (CFS)	(HR)					
		(CFS)				
+ 79.	12.75		16.	5.	4.	4.
		(INCHES)	1.166	1.388	1.388	1.388
		(AC-FT)	8.	9.	9.	9.

CUMULATIVE AREA = .12 SQ MI

*** ***

380 KK * CIR63B *

COMBINE ROUTED FLOW FROM CP CER59B AND RUNOFF OF SUB-BASINS IR63B & IR62B

382 HC HYDROGRAPH COMBINATION
ICOMP 2 NUMBER OF HYDROGRAPHS TO COMBINE

***

*** *** *** *** ***

HYDROGRAPH AT STATION CIR63B

PEAK FLOW TIME MAXIMUM AVERAGE FLOW

```
                                       6-HR       24-HR       72-HR     24.92-HR
+   (CFS)          (HR)
                              (CFS)
+     124.        12.75                  43.         14.         13.         13.
                            (INCHES)    .631        .805        .805        .805
                             (AC-FT)     22.         27.         27.         27.

                             CUMULATIVE AREA =      .64 SQ MI


*** *** *** *** *** *** *** *** *** *** *** *** *** *** *** *** *** *** *** *** *** *** *** *** *** *** *** *** *** *** *** *** ***


                *************
                *           *
  383 KK        *   RIR65C  *
                *           *
                *************
                                ROUTE RETRIEVED FLOW FROM SUB-BASIN IR63B TO COMPUTATION POINT CIR65C
                                CROSS-SECTION REVISED TO REFLECT URBANIZED CONDITIONS

                  HYDROGRAPH ROUTING DATA

  386 RS            STORAGE ROUTING
                         NSTPS           7  NUMBER OF SUBREACHES
                          ITYP        ELEV  TYPE OF INITIAL CONDITION
                        RSVRIC       -1.00  INITIAL CONDITION
                             X         .00  WORKING R AND D COEFFICIENT

  387 RC            NORMAL DEPTH CHANNEL
                           ANL        .030  LEFT OVERBANK N-VALUE
                          ANCH        .030  MAIN CHANNEL N-VALUE
                           ANR        .030  RIGHT OVERBANK N-VALUE
                         RLNTH       3300.  REACH LENGTH
                           SEL       .0010  ENERGY SLOPE
                         ELMAX          .0  MAX. ELEV. FOR STORAGE/OUTFLOW CALCULATION

                                          CROSS-SECTION DATA
                              --- LEFT OVERBANK --- + ------ MAIN CHANNEL ------- + --- RIGHT OVERBANK ---
  389 RY          ELEVATION     6.00      5.00      4.00      1.00      1.00      4.00      5.00      6.00
  388 RX          DISTANCE       .00      1.00     11.00     21.00     26.00     31.00     41.00     46.00

                                                       ***

                                          COMPUTED STORAGE-OUTFLOW-ELEVATION DATA

              STORAGE       .00       .11       .25       .42       .61       .83      1.07      1.34      1.64      1.96
              OUTFLOW       .00       .88      2.94      6.10     10.42     15.95     22.80     31.04     40.75     52.03
            ELEVATION      1.00      1.26      1.53      1.79      2.05      2.32      2.58      2.84      3.11      3.37

              STORAGE      2.31      2.68      3.10      3.61      4.23      4.96      5.76      6.60      7.47      8.37
              OUTFLOW     64.95     79.59     98.42    121.45    147.94    178.47    214.38    254.83    299.46    348.23
            ELEVATION      3.63      3.89      4.16      4.42      4.68      4.95      5.21      5.47      5.74      6.00

*** WARNING *** MODIFIED PULS ROUTING MAY BE NUMERICALLY UNSTABLE FOR OUTFLOWS BETWEEN       80. TO      348.
                THE ROUTED HYDROGRAPH SHOULD BE EXAMINED FOR OSCILLATIONS OR OUTFLOWS GREATER THAN PEAK INFLOWS.
                THIS CAN BE CORRECTED BY DECREASING THE TIME INTERVAL OR INCREASING STORAGE (USE A LONGER REACH.)

     ***             ***             ***             ***             ***

                            HYDROGRAPH AT STATION    RIR65C

  PEAK FLOW      TIME                           MAXIMUM AVERAGE FLOW
                                        6-HR       24-HR       72-HR     24.92-HR
+   (CFS)        (HR)
                               (CFS)
+     112.      13.08                     43.         14.         13.         13.
                            (INCHES)     .619        .793        .793        .793
                             (AC-FT)      21.         27.         27.         27.

  PEAK STORAGE   TIME                           MAXIMUM AVERAGE STORAGE
                                        6-HR       24-HR       72-HR     24.92-HR
+   (AC-FT)      (HR)
         0.     13.08                      0.          0.          0.          0.

  PEAK STAGE     TIME                           MAXIMUM AVERAGE STAGE
                                        6-HR       24-HR       72-HR     24.92-HR
+   (FEET)       (HR)
       4.31     13.08                    3.03        1.79        1.76        1.76

                             CUMULATIVE AREA =      .64 SQ MI


*** *** *** *** *** *** *** *** *** *** *** *** *** *** *** *** *** *** *** *** *** *** *** *** *** *** *** *** *** *** *** *** ***


                *************
                *           *
  390 KK        *   IR65C   *
                *           *
                *************
```



```
                     SUB-BASIN IR65C
                     24-HOUR SCS TYPE II RAINFALL WAS USED TO FIND TC & R FOR THIS BASIN
                     THIS BASIN USED RAINFALL REDUCTION FACTOR OF  .934
                          L =  .84  Kb = .052  Adj. Slope =    13.0

               SUBBASIN RUNOFF DATA

  395 BA         SUBBASIN CHARACTERISTICS
                       TAREA          .17  SUBBASIN AREA

                 PRECIPITATION DATA

   32 PB               STORM         3.92  BASIN TOTAL PRECIPITATION

   32 PI            INCREMENTAL PRECIPITATION PATTERN
                      .00      .00      .00      .00      .00      .00      .00      .00      .00      .00
                      .00      .00      .00      .00      .00      .00      .00      .00      .00      .00
                      .00      .00      .00      .00      .00      .00      .00      .00      .00      .00
                      .00      .00      .00      .00      .00      .00      .00      .00      .00      .00
                      .00      .00      .00      .00      .00      .00      .00      .00      .00      .00
                      .00      .00      .00      .00      .00      .00      .00      .00      .00      .00
                      .00      .00      .00      .00      .00      .00      .00      .00      .00      .00
                      .00      .00      .00      .00      .00      .00      .00      .00      .00      .00
                      .00      .00      .00      .00      .00      .00      .00      .00      .00      .00
                      .00      .00      .00      .00      .00      .00      .00      .00      .00      .00
                      .00      .00      .00      .00      .00      .00      .00      .00      .00      .00
                      .00      .00      .00      .00      .00      .00      .00      .00      .00      .00
                      .00      .00      .00      .00      .00      .00      .00      .01      .00      .01
                      .01      .01      .01      .01      .01      .01      .01      .01      .03      .03
                      .03      .09      .09      .09      .01      .01      .01      .01      .01      .01
                      .01      .01      .01      .01      .01      .01      .00      .00      .00      .00
                      .00      .00      .00      .00      .00      .00      .00      .00      .00      .00
                      .00      .00      .00      .00      .00      .00      .00      .00      .00      .00
                      .00      .00      .00      .00      .00      .00      .00      .00      .00      .00
                      .00      .00      .00      .00      .00      .00      .00      .00      .00      .00
                      .00      .00      .00      .00      .00      .00      .00      .00      .00      .00
                      .00      .00      .00      .00      .00      .00      .00      .00      .00      .00
                      .00      .00      .00      .00      .00      .00      .00      .00      .00      .00
                      .00      .00      .00      .00      .00      .00      .00      .00      .00      .00
                      .00      .00      .00      .00      .00      .00      .00      .00      .00      .00
                      .00      .00      .00      .00      .00      .00      .00      .00      .00      .00
                      .00      .00      .00      .00      .00      .00      .00      .00      .00      .00
                      .00      .00      .00      .00      .00      .00      .00      .00

  396 LG            GREEN AND AMPT LOSS RATE
                         STRTL        .28  STARTING LOSS
                           DTH        .25  MOISTURE DEFICIT
                          PSIF       4.80  WETTING FRONT SUCTION
                         XKSAT        .36  HYDRAULIC CONDUCTIVITY
                         RTIMP      21.00  PERCENT IMPERVIOUS AREA

  397 UC            CLARK UNITGRAPH
                            TC        .83  TIME OF CONCENTRATION
                             R        .72  STORAGE COEFFICIENT

  398 UA            ACCUMULATED-AREA VS. TIME,  11 ORDINATES
                         .0       5.0      16.0      30.0      65.0      77.0      84.0      90.0      94.0      97.0
                      100.0

                                                       ***

                                            UNIT HYDROGRAPH PARAMETERS
                                     CLARK   TC=   .83 HR,        R=   .72 HR
                                    SNYDER   TP=   .49 HR,       CP=   .42

                                                 UNIT HYDROGRAPH
                                            50 END-OF-PERIOD ORDINATES
                4.       15.       32.       64.       90.       94.       93.       90.       85.       80.
               73.       65.       58.       52.       46.       41.       37.       33.       29.       26.
               23.       20.       18.       16.       14.       13.       11.       10.        9.        8.
                7.        6.        6.        5.        5.        4.        4.        3.        3.        3.
                2.        2.        2.        2.        1.        1.        1.        1.        1.        1.

     ***             ***             ***             ***             ***

                            HYDROGRAPH AT STATION    IR65C

  TOTAL RAINFALL =     3.92, TOTAL LOSS =     2.23, TOTAL EXCESS =     1.69

  PEAK FLOW      TIME                           MAXIMUM AVERAGE FLOW
                                        6-HR       24-HR       72-HR     24.92-HR
+   (CFS)        (HR)
                               (CFS)
+     112.      12.33                     26.          8.          7.          7.
                            (INCHES)    1.443       1.681       1.682       1.682
                             (AC-FT)      13.         15.         15.         15.

                             CUMULATIVE AREA =      .17 SQ MI


*** *** *** *** *** *** *** *** *** *** *** *** *** *** *** *** *** *** *** *** *** *** *** *** *** *** *** *** *** *** *** *** ***
```

```
                ***************
                *             *
400 KK          *     IR65R   *
                *             *
                ***************
                        DIVERT RETENTION VOLUME

     DT          DIVERSION
                      ISTAD      RET65C  DIVERSION HYDROGRAPH IDENTIFICATION
                     DSTRMX       14.40  MAXIMUM VOLUME TO BE DIVERTED

     DI             INFLOW         .00   1000.00  10000.00

     DQ       DIVERTED FLOW        .00   1000.00  10000.00

                                                          ***

      ***             ***             ***             ***             ***

                        DIVERSION HYDROGRAPH   RET65C

  PEAK FLOW     TIME                          MAXIMUM AVERAGE FLOW
                                      6-HR        24-HR        72-HR      24.92-HR
+   (CFS)       (HR)
                          (CFS)
+     112.     12.33                  26.          7.           7.           7.
                        (INCHES)    1.443        1.588        1.588        1.588
                        (AC-FT)        13.          14.          14.          14.

                        CUMULATIVE AREA =      .17 SQ MI

      ***             ***             ***             ***             ***

                        HYDROGRAPH AT STATION    IR65R

  PEAK FLOW     TIME                          MAXIMUM AVERAGE FLOW
                                      6-HR        24-HR        72-HR      24.92-HR
+   (CFS)       (HR)
                          (CFS)
+       2.    17.17                   1.           0.           0.           0.
                        (INCHES)      .078         .094         .094         .094
                        (AC-FT)         1.           1.           1.           1.

                        CUMULATIVE AREA =      .17 SQ MI

*** *** *** *** *** *** *** *** *** *** *** *** *** *** *** *** *** *** *** *** *** *** *** *** *** *** *** *** *** *** *** *** *** *** ***

                ***************
                *             *
405 KK          *    CIR65C   *
                *             *
                ***************
                        COMBINE RETRIEVED ROUTED FLOW FROM SUB-BASIN IR63B TO RUNOFF FROM SUB-BASIN
                        IR65C

408 HC          HYDROGRAPH COMBINATION
                     ICOMP           2  NUMBER OF HYDROGRAPHS TO COMBINE

                                                          ***

      ***             ***             ***             ***             ***

                        HYDROGRAPH AT STATION    CIR65C

  PEAK FLOW     TIME                          MAXIMUM AVERAGE FLOW
                                      6-HR        24-HR        72-HR      24.92-HR
+   (CFS)       (HR)
                          (CFS)
+     112.     13.08                  43.          14.          14.          14.
                        (INCHES)      .495         .646         .646         .646
                        (AC-FT)        21.          28.          28.          28.

                        CUMULATIVE AREA =      .81 SQ MI

*** *** *** *** *** *** *** *** *** *** *** *** *** *** *** *** *** *** *** *** *** *** *** *** *** *** *** *** *** *** *** *** *** *** ***

                ***************
                *             *
409 KK          *     RIRDC   *
                *             *
                ***************
                        ROUTE FLOW FROM COMPUTATION POINT CIR65C TO COMPUTATION POINT CIRDC
                        CROSS-SECTION REVISED TO REFLECT URBANIZED CONDITIONS

                HYDROGRAPH ROUTING DATA

412 RS            STORAGE ROUTING
```



```
                     NSTPS           2  NUMBER OF SUBREACHES
                     ITYP        ELEV  TYPE OF INITIAL CONDITION
                    RSVRIC       -1.00  INITIAL CONDITION
                         X         .00 WORKING R AND D COEFFICIENT

413 RC          NORMAL DEPTH CHANNEL
                       ANL        .030  LEFT OVERBANK N-VALUE
                      ANCH        .030  MAIN CHANNEL N-VALUE
                       ANR        .030  RIGHT OVERBANK N-VALUE
                     RLNTH       3200.  REACH LENGTH
                       SEL       .0018  ENERGY SLOPE
                     ELMAX          .0  MAX. ELEV. FOR STORAGE/OUTFLOW CALCULATION

                                CROSS-SECTION DATA
                          --- LEFT OVERBANK --- + ------ MAIN CHANNEL ------- + --- RIGHT OVERBANK ---
415 RY       ELEVATION   1014.50   1014.00   1013.00   1010.00   1010.00   1013.00   1014.00   1014.50
414 RX       DISTANCE        .00      1.00     10.00     20.00     30.00     40.00     50.00     51.00

                                                ***

                                COMPUTED STORAGE-OUTFLOW-ELEVATION DATA

                STORAGE        .00       .19       .40       .65       .92      1.21      1.54      1.89      2.27      2.68
                OUTFLOW        .00      1.96      6.40     12.99     21.70     32.57     45.66     61.07     78.89     99.22
              ELEVATION    1010.00   1010.24   1010.47   1010.71   1010.95   1011.18   1011.42   1011.66   1011.89   1012.13

                STORAGE       3.11      3.58      4.07      4.59      5.17      5.84      6.58      7.40      8.27      9.14
                OUTFLOW     122.16    147.80    176.25    209.94    251.86    298.14    349.35    406.14    469.84    538.84
              ELEVATION    1012.37   1012.60   1012.84   1013.08   1013.32   1013.55   1013.79   1014.03   1014.26   1014.50

      ***             ***             ***             ***             ***

                        HYDROGRAPH AT STATION    RIRDC

  PEAK FLOW     TIME                          MAXIMUM AVERAGE FLOW
                                      6-HR        24-HR        72-HR      24.92-HR
+   (CFS)       (HR)
                          (CFS)
+      92.    13.58                  42.          14.          13.          13.
                        (INCHES)      .484         .634         .634         .634
                        (AC-FT)        21.          27.          27.          27.

 PEAK STORAGE   TIME                          MAXIMUM AVERAGE STORAGE
                                      6-HR        24-HR        72-HR      24.92-HR
+   (AC-FT)     (HR)
                                        1.          1.           0.           0.
                                       1.          0.           0.           0.
  PEAK STAGE    TIME                          MAXIMUM AVERAGE STAGE
                                      6-HR        24-HR        72-HR      24.92-HR
+   (FEET)      (HR)
                                  1011.30     1010.50      1010.48      1010.48
  1012.05    13.58

                        CUMULATIVE AREA =      .81 SQ MI

*** *** *** *** *** *** *** *** *** *** *** *** *** *** *** *** *** *** *** *** *** *** *** *** *** *** *** *** *** *** *** *** *** *** ***

                ***************
                *             *
416 KK          *    DIIRDC   *
                *             *
                ***************
                        ROUTED FLOW FROM COMPUTATION POINT CIR65C IS SPLIT AT COMPUTATION POINT
                        CIRDC

     DT          DIVERSION
                      ISTAD      RIR65C  DIVERSION HYDROGRAPH IDENTIFICATION

     DI             INFLOW         .00    16.00    34.00    51.00    71.00    80.00   100.00   120.00   150.00

     DQ       DIVERTED FLOW        .00    16.00    25.00    32.00    40.00    49.00    69.00    89.00   119.00

                                                          ***

      ***             ***             ***             ***             ***

                        DIVERSION HYDROGRAPH    RIR65C

  PEAK FLOW     TIME                          MAXIMUM AVERAGE FLOW
                                      6-HR        24-HR        72-HR      24.92-HR
+   (CFS)       (HR)
                          (CFS)
+      61.    13.58                  29.          10.          10.          10.
                        (INCHES)      .332         .482         .482         .482
                        (AC-FT)        14.          21.          21.          21.

                        CUMULATIVE AREA =      .81 SQ MI

      ***             ***             ***             ***             ***

                        HYDROGRAPH AT STATION    DIIRDC
```

```
  PEAK FLOW      TIME                              MAXIMUM AVERAGE FLOW
                                          6-HR        24-HR        72-HR      24.92-HR
+   (CFS)        (HR)
                              (CFS)
+      31.      13.33                      13.           3.           3.           3.
                           (INCHES)       .151         .152         .152         .152
                            (AC-FT)         7.           7.           7.           7.

                         CUMULATIVE AREA =      .81 SQ MI


*** *** *** *** *** *** *** *** *** *** *** *** *** *** *** *** *** *** *** *** *** *** *** *** *** *** *** *** *** *** *** *** ***


             **************
             *            *
 422 KK      *    IRDC    *
             *            *
             **************
                         SUB-BASIN IRDC
                         24-HOUR SCS TYPE II RAINFALL WAS USED TO FIND TC & R FOR THIS BASIN
                         THIS BASIN USED RAINFALL REDUCTION FACTOR OF  .934
                           L = 1.47  Kb = .038  Adj. Slope =   12.0

                SUBBASIN RUNOFF DATA

 427 BA           SUBBASIN CHARACTERISTICS
                        TAREA          .52  SUBBASIN AREA

                  PRECIPITATION DATA

  32 PB                 STORM         3.92  BASIN TOTAL PRECIPITATION

  32 PI             INCREMENTAL PRECIPITATION PATTERN
                        .00       .00       .00       .00       .00       .00       .00       .00       .00       .00
                        .00       .00       .00       .00       .00       .00       .00       .00       .00       .00
                        .00       .00       .00       .00       .00       .00       .00       .00       .00       .00
                        .00       .00       .00       .00       .00       .00       .00       .00       .00       .00
                        .00       .00       .00       .00       .00       .00       .00       .00       .00       .00
                        .00       .00       .00       .00       .00       .00       .00       .00       .00       .00
                        .00       .00       .00       .00       .00       .00       .00       .00       .00       .00
                        .00       .00       .00       .00       .00       .00       .00       .00       .00       .00
                        .00       .00       .00       .00       .00       .00       .00       .00       .00       .00
                        .00       .00       .00       .00       .00       .00       .00       .00       .00       .00
                        .00       .00       .00       .00       .00       .00       .00       .00       .00       .00
                        .00       .00       .00       .00       .00       .00       .00       .00       .00       .00
                        .00       .00       .00       .00       .00       .00       .00       .01       .00       .01
                        .01       .01       .01       .01       .01       .01       .01       .01       .03       .03
                        .03       .09       .09       .09       .01       .01       .01       .01       .01       .01
                        .01       .01       .01       .01       .01       .01       .00       .00       .00       .00
                        .00       .00       .00       .00       .00       .00       .00       .00       .00       .00
                        .00       .00       .00       .00       .00       .00       .00       .00       .00       .00
                        .00       .00       .00       .00       .00       .00       .00       .00       .00       .00
                        .00       .00       .00       .00       .00       .00       .00       .00       .00       .00
                        .00       .00       .00       .00       .00       .00       .00       .00       .00       .00
                        .00       .00       .00       .00       .00       .00       .00       .00       .00       .00
                        .00       .00       .00       .00       .00       .00       .00       .00       .00       .00
                        .00       .00       .00       .00       .00       .00       .00       .00       .00       .00
                        .00       .00       .00       .00       .00       .00       .00       .00       .00       .00
                        .00       .00       .00       .00       .00       .00       .00       .00       .00       .00
                        .00       .00       .00       .00       .00       .00       .00       .00       .00       .00
                        .00       .00       .00       .00       .00       .00       .00       .00       .00       .00
                        .00       .00       .00       .00       .00       .00       .00       .00

 428 LG           GREEN AND AMPT LOSS RATE
                        STRTL          .19  STARTING LOSS
                          DTH          .25  MOISTURE DEFICIT
                         PSIF         4.80  WETTING FRONT SUCTION
                        XKSAT          .37  HYDRAULIC CONDUCTIVITY
                        RTIMP        51.00  PERCENT IMPERVIOUS AREA

 429 UC           CLARK UNITGRAPH
                           TC          .96  TIME OF CONCENTRATION
                            R          .69  STORAGE COEFFICIENT

 430 UA           ACCUMULATED-AREA VS. TIME,  11 ORDINATES
                         .0       5.0      16.0      30.0      65.0      77.0      84.0      90.0      94.0      97.0
                      100.0

                                                        ***

                                            UNIT HYDROGRAPH PARAMETERS
                                         CLARK   TC=   .96 HR,        R=   .69 HR
                                        SNYDER   TP=   .53 HR,       CP=   .44

                                                  UNIT HYDROGRAPH
                                             49 END-OF-PERIOD ORDINATES
                  10.       39.       81.      149.      235.      282.      285.      279.      267.      252.
                 236.      218.      196.      174.      154.      137.      121.      108.       95.       85.
                  75.       66.       59.       52.       46.       41.       36.       32.       29.       25.
                  23.       20.       18.       16.       14.       12.       11.       10.        9.        8.
                   7.        6.        5.        5.        4.        4.        3.        3.        3.
```



```
       ***             ***             ***             ***             ***

                              HYDROGRAPH AT STATION     IRDC

     TOTAL RAINFALL =    3.92, TOTAL LOSS =    1.38, TOTAL EXCESS =    2.54

  PEAK FLOW      TIME                              MAXIMUM AVERAGE FLOW
                                          6-HR        24-HR        72-HR      24.92-HR
+   (CFS)        (HR)
                              (CFS)
+     397.      12.42                     110.          36.          34.          34.
                           (INCHES)      1.943        2.520        2.524        2.524
                            (AC-FT)        54.          71.          71.          71.

                         CUMULATIVE AREA =      .52 SQ MI


*** *** *** *** *** *** *** *** *** *** *** *** *** *** *** *** *** *** *** *** *** *** *** *** *** *** *** *** *** *** *** *** ***


             **************
             *            *
 432 KK      *    IRDR    *
             *            *
             **************
                           DIVERT RETENTION VOLUME

      DT          DIVERSION
                        ISTAD      RETRDC  DIVERSION HYDROGRAPH IDENTIFICATION
                       DSTRMX       43.20  MAXIMUM VOLUME TO BE DIVERTED

      DI              INFLOW         .00   1000.00  10000.00

      DQ        DIVERTED FLOW        .00   1000.00  10000.00
                                                                  ***

       ***             ***             ***             ***             ***

                              DIVERSION HYDROGRAPH   RETRDC

  PEAK FLOW      TIME                              MAXIMUM AVERAGE FLOW
                                          6-HR        24-HR        72-HR      24.92-HR
+   (CFS)        (HR)
                              (CFS)
+     397.      12.42                      78.          22.          21.          21.
                           (INCHES)      1.377        1.543        1.543        1.543
                            (AC-FT)        39.          43.          43.          43.

                         CUMULATIVE AREA =      .52 SQ MI

       ***             ***             ***             ***             ***

                              HYDROGRAPH AT STATION     IRDR

  PEAK FLOW      TIME                              MAXIMUM AVERAGE FLOW
                                          6-HR        24-HR        72-HR      24.92-HR
+   (CFS)        (HR)
                              (CFS)
+     225.      13.17                      47.          14.          13.          13.
                           (INCHES)       .829         .981         .981         .981
                            (AC-FT)        23.          27.          27.          27.

                         CUMULATIVE AREA =      .52 SQ MI


*** *** *** *** *** *** *** *** *** *** *** *** *** *** *** *** *** *** *** *** *** *** *** *** *** *** *** *** *** *** *** *** ***


             **************
             *            *
 437 KK      *   CIRDC    *
             *            *
             **************
                           COMBINE ROUTED FLOW FROM COMPUTATION POINT CIR65C TO RUNOFF FROM SUB-BASIN
                           IRDC

 440 HC           HYDROGRAPH COMBINATION
                        ICOMP            2  NUMBER OF HYDROGRAPHS TO COMBINE
                                                                  ***

       ***             ***             ***             ***             ***

                              HYDROGRAPH AT STATION    CIRDC

  PEAK FLOW      TIME                              MAXIMUM AVERAGE FLOW
                                          6-HR        24-HR        72-HR      24.92-HR
+   (CFS)        (HR)
                              (CFS)
+     234.      13.17                      60.          17.          17.          17.
```

(INCHES)	.418	.478	.478	.478
(AC-FT)	30.	34.	34.	34.

CUMULATIVE AREA = 1.33 SQ MI

*** ***

```
              **************
              *            *
441 KK        *   RIRSMC   *
              *            *
              **************
```

ROUTE FLOW COMPUTATION POINT CIRDC TO COMPUTATION POINT CIRSMC
CROSS-SECTION REVISED TO REFLECT URBANIZED CONDITIONS

HYDROGRAPH ROUTING DATA

444 RS STORAGE ROUTING

NSTPS	3	NUMBER OF SUBREACHES
ITYP	ELEV	TYPE OF INITIAL CONDITION
RSVRIC	-1.00	INITIAL CONDITION
X	.00	WORKING R AND D COEFFICIENT

445 RC NORMAL DEPTH CHANNEL

ANL	.035	LEFT OVERBANK N-VALUE
ANCH	.035	MAIN CHANNEL N-VALUE
ANR	.035	RIGHT OVERBANK N-VALUE
RLNTH	3400.	REACH LENGTH
SEL	.0058	ENERGY SLOPE
ELMAX	.0	MAX. ELEV. FOR STORAGE/OUTFLOW CALCULATION

CROSS-SECTION DATA

		--- LEFT OVERBANK --- +		------ MAIN CHANNEL	------- +		--- RIGHT OVERBANK ---		
447 RY	ELEVATION	1006.00	1005.00	1004.00	999.00	999.00	1004.00	1005.00	1006.00
446 RX	DISTANCE	.00	40.00	60.00	70.00	80.00	90.00	110.00	150.00

***

COMPUTED STORAGE-OUTFLOW-ELEVATION DATA

STORAGE	.00	.31	.66	1.05	1.49	1.97	2.49	3.05	3.66	4.30
OUTFLOW	.00	6.24	20.27	40.88	67.90	101.40	141.56	188.60	242.77	304.35
ELEVATION	999.00	999.37	999.74	1000.11	1000.47	1000.84	1001.21	1001.58	1001.95	1002.32
STORAGE	4.99	5.73	6.50	7.32	8.21	9.47	11.15	13.36	16.40	20.29
OUTFLOW	373.60	450.80	536.24	630.18	743.23	885.51	1052.57	1246.97	1488.88	1792.29
ELEVATION	1002.68	1003.05	1003.42	1003.79	1004.16	1004.53	1004.89	1005.26	1005.63	1006.00

*** WARNING *** MODIFIED PULS ROUTING MAY BE NUMERICALLY UNSTABLE FOR OUTFLOWS BETWEEN 304. TO 1053.
THE ROUTED HYDROGRAPH SHOULD BE EXAMINED FOR OSCILLATIONS OR OUTFLOWS GREATER THAN PEAK INFLOWS.
THIS CAN BE CORRECTED BY DECREASING THE TIME INTERVAL OR INCREASING STORAGE (USE A LONGER REACH.)

*** *** *** *** ***

HYDROGRAPH AT STATION RIRSMC

PEAK FLOW	TIME		MAXIMUM AVERAGE FLOW			
			6-HR	24-HR	72-HR	24.92-HR
+ (CFS)	(HR)					
		(CFS)				
+ 219.	13.42		59.	17.	16.	16.
		(INCHES)	.413	.475	.475	.475
		(AC-FT)	29.	34.	34.	34.

PEAK STORAGE	TIME	MAXIMUM AVERAGE STORAGE			
		6-HR	24-HR	72-HR	24.92-HR
+ (AC-FT)	(HR)				
1.	13.42	0.	0.	0.	0.

PEAK STAGE	TIME	MAXIMUM AVERAGE STAGE			
		6-HR	24-HR	72-HR	24.92-HR
+ (FEET)	(HR)				
1001.79	13.42	1000.22	999.41	999.40	999.40

CUMULATIVE AREA = 1.33 SQ MI

*** ***

```
              **************
              *            *
448 KK        *   IRSMC    *
              *            *
              **************
```

SUB-BASIN IRSMC
24-HOUR SCS TYPE II RAINFALL WAS USED TO FIND TC & R FOR THIS BASIN
THIS BASIN USED RAINFALL REDUCTION FACTOR OF .934
L = .88 Kb = .043 Adj. Slope = 32.0

SUBBASIN RUNOFF DATA

453 BA SUBBASIN CHARACTERISTICS
TAREA .24 SUBBASIN AREA

PRECIPITATION DATA

32 PB STORM 3.92 BASIN TOTAL PRECIPITATION

32 PI INCREMENTAL PRECIPITATION PATTERN

.00	.00	.00	.00	.00	.00	.00	.00	.00	.00
.00	.00	.00	.00	.00	.00	.00	.00	.00	.00
.00	.00	.00	.00	.00	.00	.00	.00	.00	.00
.00	.00	.00	.00	.00	.00	.00	.00	.00	.00
.00	.00	.00	.00	.00	.00	.00	.00	.00	.00
.00	.00	.00	.00	.00	.00	.00	.00	.00	.00
.00	.00	.00	.00	.00	.00	.00	.00	.00	.00
.00	.00	.00	.00	.00	.00	.00	.00	.00	.00
.00	.00	.00	.00	.00	.00	.00	.00	.00	.00
.00	.00	.00	.00	.00	.00	.00	.00	.00	.00
.00	.00	.00	.00	.00	.00	.00	.00	.00	.00
.00	.00	.00	.00	.00	.00	.00	.00	.00	.00
.00	.00	.00	.00	.00	.00	.00	.01	.00	.01
.01	.01	.01	.01	.01	.01	.01	.01	.03	.03
.03	.09	.09	.09	.01	.01	.01	.01	.01	.01
.01	.01	.01	.01	.01	.01	.00	.00	.00	.00
.00	.00	.00	.00	.00	.00	.00	.00	.00	.00
.00	.00	.00	.00	.00	.00	.00	.00	.00	.00
.00	.00	.00	.00	.00	.00	.00	.00	.00	.00
.00	.00	.00	.00	.00	.00	.00	.00	.00	.00
.00	.00	.00	.00	.00	.00	.00	.00	.00	.00
.00	.00	.00	.00	.00	.00	.00	.00	.00	.00
.00	.00	.00	.00	.00	.00	.00	.00	.00	.00
.00	.00	.00	.00	.00	.00	.00	.00	.00	.00
.00	.00	.00	.00	.00	.00	.00	.00	.00	.00
.00	.00	.00	.00	.00	.00	.00	.00	.00	.00
.00	.00	.00	.00	.00	.00	.00	.00	.00	.00
.00	.00	.00	.00	.00	.00	.00	.00	.00	.00
.00	.00	.00	.00	.00	.00	.00	.00		

454 LG GREEN AND AMPT LOSS RATE

STRTL	.21	STARTING LOSS
DTH	.25	MOISTURE DEFICIT
PSIF	4.50	WETTING FRONT SUCTION
XKSAT	.43	HYDRAULIC CONDUCTIVITY
RTIMP	34.00	PERCENT IMPERVIOUS AREA

455 UC CLARK UNITGRAPH

TC	.48	TIME OF CONCENTRATION
R	.33	STORAGE COEFFICIENT

456 UA ACCUMULATED-AREA VS. TIME, 11 ORDINATES

.0	5.0	16.0	30.0	65.0	77.0	84.0	90.0	94.0	97.0
100.0									

***

UNIT HYDROGRAPH PARAMETERS
CLARK TC= .48 HR, R= .33 HR
SNYDER TP= .30 HR, CP= .53

UNIT HYDROGRAPH
24 END-OF-PERIOD ORDINATES

27.	119.	228.	267.	244.	211.	172.	134.	104.	81.
63.	49.	38.	29.	23.	18.	14.	11.	8.	6.
5.	4.	3.	2.						

*** *** *** *** ***

HYDROGRAPH AT STATION IRSMC

TOTAL RAINFALL = 3.92, TOTAL LOSS = 1.89, TOTAL EXCESS = 2.03

PEAK FLOW	TIME		MAXIMUM AVERAGE FLOW			
			6-HR	24-HR	72-HR	24.92-HR
+ (CFS)	(HR)					
		(CFS)				
+ 285.	12.17		42.	13.	13.	13.
		(INCHES)	1.636	2.020	2.023	2.023
		(AC-FT)	21.	26.	26.	26.

CUMULATIVE AREA = .24 SQ MI

*** ***

```
              **************
              *            *
458 KK        *   IRSMR    *
              *            *
              **************
```

DIVERT RETENTION VOLUME

RELAXED RETENTION VOLUME FROM 20.0 AC-FT

DT DIVERSION
ISTAD RETSMC DIVERSION HYDROGRAPH IDENTIFICATION
DSTRMX 19.10 MAXIMUM VOLUME TO BE DIVERTED

DI INFLOW .00 1000.00 10000.00

DQ DIVERTED FLOW .00 1000.00 10000.00

***

*** *** *** *** ***

DIVERSION HYDROGRAPH RETSMC

PEAK FLOW	TIME		MAXIMUM AVERAGE FLOW			
			6-HR	24-HR	72-HR	24.92-HR
+ (CFS)	(HR)					
		(CFS)				
+ 285.	12.17		36.	10.	9.	9.
		(INCHES)	1.371	1.486	1.486	1.486
		(AC-FT)	18.	19.	19.	19.

CUMULATIVE AREA = .24 SQ MI

*** *** *** *** ***

HYDROGRAPH AT STATION IRSMR

PEAK FLOW	TIME		MAXIMUM AVERAGE FLOW			
			6-HR	24-HR	72-HR	24.92-HR
+ (CFS)	(HR)					
		(CFS)				
+ 74.	12.83		11.	3.	3.	3.
		(INCHES)	.437	.537	.537	.537
		(AC-FT)	6.	7.	7.	7.

CUMULATIVE AREA = .24 SQ MI

*** ***

```
              **************
              *            *
464 KK        *   CIRSMS   *
              *            *
              **************
```

466 HC HYDROGRAPH COMBINATION
ICOMP 2 NUMBER OF HYDROGRAPHS TO COMBINE

***

*** *** *** *** ***

HYDROGRAPH AT STATION CIRSMS

PEAK FLOW	TIME		MAXIMUM AVERAGE FLOW			
			6-HR	24-HR	72-HR	24.92-HR
+ (CFS)	(HR)					
		(CFS)				
+ 243.	13.42		69.	21.	20.	20.
		(INCHES)	.410	.484	.484	.484
		(AC-FT)	34.	41.	41.	41.

CUMULATIVE AREA = 1.58 SQ MI

*** ***

```
              **************
              *            *
467 KK        *   CIRSMC   *
              *            *
              **************
```

COMBINE FLOWS IN MARICOPA DRAIN JUST WEST OF 75TH AVE

469 HC HYDROGRAPH COMBINATION
ICOMP 2 NUMBER OF HYDROGRAPHS TO COMBINE

***

*** *** *** *** ***

HYDROGRAPH AT STATION CIRSMC

PEAK FLOW TIME MAXIMUM AVERAGE FLOW

			6-HR	24-HR	72-HR	24.92-HR
+ (CFS)	(HR)					
		(CFS)				
+ 536.	14.08		281.	97.	93.	93.
		(INCHES)	.354	.488	.488	.488
		(AC-FT)	139.	192.	192.	192.

CUMULATIVE AREA = 7.38 SQ MI

*** ***

```
              **************
              *            *
470 KK        *    CD2C    *
              *            *
              **************
```

SUB-BASIN CD2C
24-HOUR SCS TYPE II RAINFALL WAS USED TO FIND TC & R FOR THIS BASIN
THIS BASIN USED RAINFALL REDUCTION FACTOR OF .934
L = 1.57 Kb = .043 Adj. Slope = 4.0

SUBBASIN RUNOFF DATA

475 BA SUBBASIN CHARACTERISTICS
TAREA .60 SUBBASIN AREA

PRECIPITATION DATA

32 PB STORM 3.92 BASIN TOTAL PRECIPITATION

32 PI INCREMENTAL PRECIPITATION PATTERN

.00	.00	.00	.00	.00	.00	.00	.00	.00	.00
.00	.00	.00	.00	.00	.00	.00	.00	.00	.00
.00	.00	.00	.00	.00	.00	.00	.00	.00	.00
.00	.00	.00	.00	.00	.00	.00	.00	.00	.00
.00	.00	.00	.00	.00	.00	.00	.00	.00	.00
.00	.00	.00	.00	.00	.00	.00	.00	.00	.00
.00	.00	.00	.00	.00	.00	.00	.00	.00	.00
.00	.00	.00	.00	.00	.00	.00	.00	.00	.00
.00	.00	.00	.00	.00	.00	.00	.00	.00	.00
.00	.00	.00	.00	.00	.00	.00	.00	.00	.00
.00	.00	.00	.00	.00	.00	.00	.00	.00	.00
.00	.00	.00	.00	.00	.00	.00	.00	.00	.00
.00	.00	.00	.00	.00	.00	.00	.01	.00	.01
.01	.01	.01	.01	.01	.01	.01	.01	.03	.03
.03	.09	.09	.09	.01	.01	.01	.01	.01	.01
.01	.01	.01	.01	.01	.01	.00	.00	.00	.00
.00	.00	.00	.00	.00	.00	.00	.00	.00	.00
.00	.00	.00	.00	.00	.00	.00	.00	.00	.00
.00	.00	.00	.00	.00	.00	.00	.00	.00	.00
.00	.00	.00	.00	.00	.00	.00	.00	.00	.00
.00	.00	.00	.00	.00	.00	.00	.00	.00	.00
.00	.00	.00	.00	.00	.00	.00	.00	.00	.00
.00	.00	.00	.00	.00	.00	.00	.00	.00	.00
.00	.00	.00	.00	.00	.00	.00	.00	.00	.00
.00	.00	.00	.00	.00	.00	.00	.00	.00	.00
.00	.00	.00	.00	.00	.00	.00	.00	.00	.00
.00	.00	.00	.00	.00	.00	.00	.00	.00	.00
.00	.00	.00	.00	.00	.00	.00	.00	.00	.00
.00	.00	.00	.00	.00	.00	.00	.00		

476 LG GREEN AND AMPT LOSS RATE
STRTL .24 STARTING LOSS
DTH .15 MOISTURE DEFICIT
PSIF 8.40 WETTING FRONT SUCTION
XKSAT .09 HYDRAULIC CONDUCTIVITY
RTIMP 31.00 PERCENT IMPERVIOUS AREA

477 UC CLARK UNITGRAPH
TC 1.50 TIME OF CONCENTRATION
R 1.12 STORAGE COEFFICIENT

478 UA ACCUMULATED-AREA VS. TIME, 11 ORDINATES
.0 5.0 16.0 30.0 65.0 77.0 84.0 90.0 94.0 97.0
100.0

***

UNIT HYDROGRAPH PARAMETERS
CLARK TC= 1.50 HR, R= 1.12 HR
SNYDER TP= .82 HR, CP= .43

UNIT HYDROGRAPH
79 END-OF-PERIOD ORDINATES

5.	15.	30.	49.	70.	102.	152.	189.	202.	205.
203.	200.	196.	190.	184.	176.	169.	163.	154.	143.
132.	123.	114.	106.	98.	91.	84.	78.	73.	68.
63.	58.	54.	50.	46.	43.	40.	37.	34.	32.
30.	28.	26.	24.	22.	20.	19.	18.	16.	15.
14.	13.	12.	11.	10.	10.	9.	8.	8.	7.
7.	6.	6.	5.	5.	5.	4.	4.	4.	3.
3.	3.	3.	3.	2.	2.	2.	2.	2.	

```
      ***           ***           ***           ***           ***

                    HYDROGRAPH AT STATION     CD2C

    TOTAL RAINFALL =   3.92, TOTAL LOSS =    1.53, TOTAL EXCESS =    2.39

 PEAK FLOW     TIME                        MAXIMUM AVERAGE FLOW
                                  6-HR        24-HR       72-HR      24.92-HR
+  (CFS)       (HR)
                    (CFS)
+    337.     12.75                128.         38.         37.         37.
                 (INCHES)         1.996       2.368       2.369       2.369
                 (AC-FT)             64.         76.         76.         76.

                 CUMULATIVE AREA =     .60 SQ MI


*** *** *** *** *** *** *** *** *** *** *** *** *** *** *** *** *** *** *** *** *** *** *** *** *** *** *** *** *** *** *** *** *** *** ***


          ***************
          *             *
480 KK    *      CD2R   *
          *             *
          ***************
                    DIVERT RETENTION VOLUME
                    RELAXED RETENTION VOLUME FROM 44.8 AC-FT.

    DT          DIVERSION
                    ISTAD        RET2C  DIVERSION HYDROGRAPH IDENTIFICATION
                   DSTRMX        39.70  MAXIMUM VOLUME TO BE DIVERTED

    DI            INFLOW          .00   1000.00  10000.00

    DQ       DIVERTED FLOW        .00   1000.00  10000.00

                                                      ***
      ***           ***           ***           ***           ***

                    DIVERSION HYDROGRAPH     RET2C

 PEAK FLOW     TIME                        MAXIMUM AVERAGE FLOW
                                  6-HR        24-HR       72-HR      24.92-HR
+  (CFS)       (HR)
                    (CFS)
+    337.     12.75                 74.         20.         19.         19.
                 (INCHES)         1.150       1.245       1.245       1.245
                 (AC-FT)             37.         40.         40.         40.

                 CUMULATIVE AREA =     .60 SQ MI


      ***           ***           ***           ***           ***

                    HYDROGRAPH AT STATION     CD2R

 PEAK FLOW     TIME                        MAXIMUM AVERAGE FLOW
                                  6-HR        24-HR       72-HR      24.92-HR
+  (CFS)       (HR)
                    (CFS)
+    262.     13.50                 66.         18.         17.         17.
                 (INCHES)         1.032       1.125       1.125       1.125
                 (AC-FT)             33.         36.         36.         36.

                 CUMULATIVE AREA =     .60 SQ MI


*** *** *** *** *** *** *** *** *** *** *** *** *** *** *** *** *** *** *** *** *** *** *** *** *** *** *** *** *** *** *** *** *** *** ***


          ***************
          *             *
486 KK    *     CCD2C   *
          *             *
          ***************
                    COMBINE FLOW FROM CD2C AND MARIOCPA DRAIN
                    MARICOPA DRAIN AT 1000 FT EAST OF 75TH AVE AND SOUTH MOUNTAIN AVE. (1/2 MILE
                    BETWEEN DOBBINS AND BASELINE ROADS.)

490 HC          HYDROGRAPH COMBINATION
                    ICOMP           2  NUMBER OF HYDROGRAPHS TO COMBINE
                                                      ***
      ***           ***           ***           ***           ***

                    HYDROGRAPH AT STATION    CCD2C

 PEAK FLOW     TIME                        MAXIMUM AVERAGE FLOW
                                  6-HR        24-HR       72-HR      24.92-HR
```



```
+  (CFS)       (HR)
                    (CFS)
+    738.     13.67                346.        115.        111.        111.
                 (INCHES)         .403        .535        .535        .535
                 (AC-FT)             172.        228.        228.        228.

                 CUMULATIVE AREA =     7.98 SQ MI


*** *** *** *** *** *** *** *** *** *** *** *** *** *** *** *** *** *** *** *** *** *** *** *** *** *** *** *** *** *** *** *** *** *** ***


          ***************
          *             *
491 KK    *    RCD3C1   *
          *             *
          ***************
                    MARICOPA DRAIN FROM JUST EAST OF 75TH AVE ALONG POWERLINE RD (INDIAN
                    RESERVATION BOUNDARY).
                    ADJUST SLOPE FROM .0011 TO REFLECT A VELOCITY OF LESS THAN 5 FT/SEC

               HYDROGRAPH ROUTING DATA

495 RS            STORAGE ROUTING
                      NSTPS          2  NUMBER OF SUBREACHES
                       ITYP       ELEV  TYPE OF INITIAL CONDITION
                      RSVRIC     -1.00  INITIAL CONDITION
                          X        .00  WORKING R AND D COEFFICIENT

496 RC            NORMAL DEPTH CHANNEL
                        ANL       .030  LEFT OVERBANK N-VALUE
                       ANCH       .030  MAIN CHANNEL N-VALUE
                        ANR       .030  RIGHT OVERBANK N-VALUE
                      RLNTH      3700.  REACH LENGTH
                        SEL      .0007  ENERGY SLOPE
                      ELMAX         .0  MAX. ELEV. FOR STORAGE/OUTFLOW CALCULATION

                                  CROSS-SECTION DATA
                          --- LEFT OVERBANK --- + ------ MAIN CHANNEL ------- + --- RIGHT OVERBANK ---
498 RY          ELEVATION   986.20   986.10   986.00   981.00   981.00   986.00   986.10   986.20
497 RX          DISTANCE       .00    10.00    20.00    45.00   165.00   190.00   200.00   210.00
                                                      ***

                                  COMPUTED STORAGE-OUTFLOW-ELEVATION DATA

                STORAGE       .00     2.82     5.71     8.66    11.67    14.74    17.88    21.09    24.35    27.68
                OUTFLOW       .00    18.26    58.18   114.79   186.14   271.09   368.87   478.94   600.91   734.45
              ELEVATION    981.00   981.27   981.55   981.82   982.09   982.37   982.64   982.92   983.19   983.46

                STORAGE     31.08    34.53    38.06    41.64    45.29    49.00    52.78    56.62    60.52    64.81
                OUTFLOW    879.34  1035.39  1202.46  1380.43  1569.22  1768.76  1979.01  2199.93  2431.51  2694.91
              ELEVATION    983.74   984.01   984.28   984.56   984.83   985.11   985.38   985.65   985.93   986.20


      ***           ***           ***           ***           ***

                    HYDROGRAPH AT STATION    RCD3C1

 PEAK FLOW     TIME                        MAXIMUM AVERAGE FLOW
                                  6-HR        24-HR       72-HR      24.92-HR
+  (CFS)       (HR)
                    (CFS)
+    688.     14.25                341.        111.        107.        107.
                 (INCHES)         .398        .518        .518        .518
                 (AC-FT)             169.        221.        221.        221.

 PEAK STORAGE  TIME                        MAXIMUM AVERAGE STORAGE
                                  6-HR        24-HR       72-HR      24.92-HR
+  (AC-FT)     (HR)
                 13.     14.25                8.          3.          3.          3.

 PEAK STAGE    TIME                        MAXIMUM AVERAGE STAGE
                                  6-HR        24-HR       72-HR      24.92-HR
+  (FEET)      (HR)
               983.37    14.25             982.51      981.58      981.56      981.56

                 CUMULATIVE AREA =     7.98 SQ MI


*** *** *** *** *** *** *** *** *** *** *** *** *** *** *** *** *** *** *** *** *** *** *** *** *** *** *** *** *** *** *** *** *** *** ***


          ***************
          *             *
499 KK    *     A67AC   *
          *             *
          ***************
                    SUB-BASIN A67AC
                    24-HOUR SCS TYPE II RAINFALL WAS USED TO FIND TC & R FOR THIS BASIN
                    THIS BASIN USED RAINFALL REDUCTION FACTOR OF  .934
                      L = 1.65  Kb = .042  Adj. Slope =    7.0
```

```
            SUBBASIN RUNOFF DATA

 504 BA       SUBBASIN CHARACTERISTICS
                 TAREA          .62  SUBBASIN AREA

              PRECIPITATION DATA

  32 PB          STORM         3.92  BASIN TOTAL PRECIPITATION

  32 PI        INCREMENTAL PRECIPITATION PATTERN
                  .00    .00    .00    .00    .00    .00    .00    .00    .00    .00
                  .00    .00    .00    .00    .00    .00    .00    .00    .00    .00
                  .00    .00    .00    .00    .00    .00    .00    .00    .00    .00
                  .00    .00    .00    .00    .00    .00    .00    .00    .00    .00
                  .00    .00    .00    .00    .00    .00    .00    .00    .00    .00
                  .00    .00    .00    .00    .00    .00    .00    .00    .00    .00
                  .00    .00    .00    .00    .00    .00    .00    .00    .00    .00
                  .00    .00    .00    .00    .00    .00    .00    .00    .00    .00
                  .00    .00    .00    .00    .00    .00    .00    .00    .00    .00
                  .00    .00    .00    .00    .00    .00    .00    .00    .00    .00
                  .00    .00    .00    .00    .00    .00    .00    .00    .00    .00
                  .00    .00    .00    .00    .00    .00    .00    .00    .00    .00
                  .00    .00    .00    .00    .00    .00    .00    .01    .00    .01
                  .01    .01    .01    .01    .01    .01    .01    .01    .03    .03
                  .03    .09    .09    .09    .01    .01    .01    .01    .01    .01
                  .01    .01    .01    .01    .01    .01    .00    .00    .00    .00
                  .00    .00    .00    .00    .00    .00    .00    .00    .00    .00
                  .00    .00    .00    .00    .00    .00    .00    .00    .00    .00
                  .00    .00    .00    .00    .00    .00    .00    .00    .00    .00
                  .00    .00    .00    .00    .00    .00    .00    .00    .00    .00
                  .00    .00    .00    .00    .00    .00    .00    .00    .00    .00
                  .00    .00    .00    .00    .00    .00    .00    .00    .00    .00
                  .00    .00    .00    .00    .00    .00    .00    .00    .00    .00
                  .00    .00    .00    .00    .00    .00    .00    .00    .00    .00
                  .00    .00    .00    .00    .00    .00    .00    .00    .00    .00
                  .00    .00    .00    .00    .00    .00    .00    .00    .00    .00
                  .00    .00    .00    .00    .00    .00    .00    .00    .00    .00
                  .00    .00    .00    .00    .00    .00    .00    .00    .00    .00
                  .00    .00    .00    .00    .00    .00    .00    .00

 505 LG       GREEN AND AMPT LOSS RATE
                 STRTL          .25  STARTING LOSS
                   DTH          .25  MOISTURE DEFICIT
                  PSIF         5.10  WETTING FRONT SUCTION
                 XKSAT          .32  HYDRAULIC CONDUCTIVITY
                 RTIMP        34.00  PERCENT IMPERVIOUS AREA

 506 UC       CLARK UNITGRAPH
                    TC         1.50  TIME OF CONCENTRATION
                     R         1.14  STORAGE COEFFICIENT

 507 UA       ACCUMULATED-AREA VS. TIME, 11 ORDINATES
                    .0      5.0     16.0     30.0     65.0     77.0     84.0     90.0     94.0     97.0
                 100.0

                                              ***

                                     UNIT HYDROGRAPH PARAMETERS
                               CLARK   TC=  1.50 HR,        R=  1.14 HR
                              SNYDER   TP=   .83 HR,       CP=   .42

                                          UNIT HYDROGRAPH
                                     81 END-OF-PERIOD ORDINATES
         5.      15.      30.      50.      71.     104.     154.     192.     205.     208.
       207.     204.     200.     195.     188.     181.     173.     167.     158.     147.
       136.     127.     118.     110.     102.      95.      88.      82.      76.      71.
        66.      61.      57.      53.      49.      46.      42.      39.      37.      34.
        32.      29.      27.      25.      24.      22.      20.      19.      18.      16.
        15.      14.      13.      12.      11.      11.      10.       9.       8.       8.
         7.       7.       6.       6.       5.       5.       5.       4.       4.       4.
         4.       3.       3.       3.       3.       2.       2.       2.       2.       2.
         2.

   ***          ***          ***          ***          ***

                  HYDROGRAPH AT STATION     A67AC

   TOTAL RAINFALL =     3.92, TOTAL LOSS =     1.83, TOTAL EXCESS =     2.09

 PEAK FLOW     TIME                        MAXIMUM AVERAGE FLOW
                                  6-HR        24-HR       72-HR     24.92-HR
 +  (CFS)      (HR)
                          (CFS)
 +    291.     12.75                111.         34.         33.         33.
                        (INCHES)   1.663       2.068       2.069       2.069
                         (AC-FT)     55.         68.         68.         68.

                     CUMULATIVE AREA =    .62 SQ MI

*** *** *** *** *** *** *** *** *** *** *** *** *** *** *** *** *** *** *** *** *** *** *** *** *** *** *** *** *** *** *** *** *** ***
```



```
           **************
           *            *
 509 KK    *    A67AR   *
           *            *
           **************
                         DIVERT RETENTION VOLUME

   DT         DIVERSION
                    ISTAD      RET67A  DIVERSION HYDROGRAPH IDENTIFICATION
                   DSTRMX       38.40  MAXIMUM VOLUME TO BE DIVERTED

   DI             INFLOW          .00   1000.00  10000.00

   DQ      DIVERTED FLOW          .00   1000.00  10000.00

                                              ***

   ***          ***          ***          ***          ***

                      DIVERSION HYDROGRAPH     RET67A

 PEAK FLOW     TIME                        MAXIMUM AVERAGE FLOW
                                  6-HR        24-HR       72-HR     24.92-HR
 +  (CFS)      (HR)
                          (CFS)
 +    291.     12.75                 70.         19.         19.         19.
                        (INCHES)   1.059       1.165       1.165       1.165
                         (AC-FT)     35.         38.         38.         38.

                     CUMULATIVE AREA =    .62 SQ MI

   ***          ***          ***          ***          ***

                      HYDROGRAPH AT STATION     A67AR

 PEAK FLOW     TIME                        MAXIMUM AVERAGE FLOW
                                  6-HR        24-HR       72-HR     24.92-HR
 +  (CFS)      (HR)
                          (CFS)
 +    205.     13.58                 53.         15.         14.         14.
                        (INCHES)    .803        .904        .904        .904
                         (AC-FT)     26.         30.         30.         30.

                     CUMULATIVE AREA =    .62 SQ MI

*** *** *** *** *** *** *** *** *** *** *** *** *** *** *** *** *** *** *** *** *** *** *** *** *** *** *** *** *** *** *** *** *** ***

           **************
           *            *
 514 KK    *   RCD4C1   *
           *            *
           **************
                ROUTE FLOW FROM SUB-BASIN 67AC CPCD4C TO COMPUTATION POINT CPCD4C
                CROSS-SECTION REVISED TO REFLECT URBANIZED CONDITIONS

          HYDROGRAPH ROUTING DATA

 517 RS      STORAGE ROUTING
                  NSTPS          2  NUMBER OF SUBREACHES
                   ITYP       ELEV  TYPE OF INITIAL CONDITION
                 RSVRIC      -1.00  INITIAL CONDITION
                      X        .00  WORKING R AND D COEFFICIENT

 518 RC      NORMAL DEPTH CHANNEL
                    ANL       .035  LEFT OVERBANK N-VALUE
                   ANCH       .035  MAIN CHANNEL N-VALUE
                    ANR       .035  RIGHT OVERBANK N-VALUE
                  RLNTH      2600.  REACH LENGTH
                    SEL      .0024  ENERGY SLOPE
                  ELMAX         .0  MAX. ELEV. FOR STORAGE/OUTFLOW CALCULATION

                                   CROSS-SECTION DATA
                   --- LEFT OVERBANK --- + ------ MAIN CHANNEL ------- + --- RIGHT OVERBANK ---
 520 RY     ELEVATION    988.00    987.00    986.00    983.00    983.00    986.00    987.00    988.00
 519 RX      DISTANCE       .00     40.00     50.00     55.00     60.00     65.00     70.00    110.00

                                              ***

                          COMPUTED STORAGE-OUTFLOW-ELEVATION DATA

     STORAGE       .00      .09      .18      .30      .42      .56      .72      .89     1.07     1.27
     OUTFLOW       .00     1.15     3.73     7.55    12.59    18.89    26.49    35.45    45.84    57.71
   ELEVATION    983.00   983.26   983.53   983.79   984.05   984.32   984.58   984.84   985.11   985.37

     STORAGE      1.47     1.70     1.94     2.25     2.61     3.04     3.62     4.52     5.75     7.31
     OUTFLOW     71.12    86.14   105.20   128.33   154.81   185.24   217.79   261.32   318.74   392.90
   ELEVATION    985.63   985.90   986.16   986.42   986.68   986.95   987.21   987.47   987.74   988.00

   ***          ***          ***          ***          ***
```

```
                              HYDROGRAPH AT STATION    RCD4C1

   PEAK FLOW      TIME                            MAXIMUM AVERAGE FLOW
                                         6-HR        24-HR        72-HR      24.92-HR
 +   (CFS)        (HR)
                              (CFS)
 +    171.       13.92                    53.          15.          14.          14.
                            (INCHES)     .795         .897         .897         .897
                            (AC-FT)       26.          30.          30.          30.

   PEAK STORAGE   TIME                          MAXIMUM AVERAGE STORAGE
                                         6-HR        24-HR        72-HR      24.92-HR
 +  (AC-FT)       (HR)
         1.      13.92                     1.           0.           0.           0.

   PEAK STAGE     TIME                           MAXIMUM AVERAGE STAGE
                                         6-HR        24-HR        72-HR      24.92-HR
 +   (FEET)       (HR)
     986.82      13.92                  985.02       983.68       983.65       983.65

                            CUMULATIVE AREA =     .62 SQ MI


*** *** *** *** *** *** *** *** *** *** *** *** *** *** *** *** *** *** *** *** *** *** *** *** *** *** *** *** *** *** *** *** *** ***


                **************
                *            *
   521 KK       *    CD4C    *
                *            *
                **************

                               SUB-BASIN CD4C
                               24-HOUR SCS TYPE II RAINFALL WAS USED TO FIND TC & R FOR THIS BASIN
                               THIS BASIN USED RAINFALL REDUCTION FACTOR OF   .934
                                 L =  .64   Kb = .051  Adj. Slope =      9.0

                  SUBBASIN RUNOFF DATA

   526 BA           SUBBASIN CHARACTERISTICS
                          TAREA          .19  SUBBASIN AREA

                    PRECIPITATION DATA

    32 PB                 STORM         3.92  BASIN TOTAL PRECIPITATION

    32 PI             INCREMENTAL PRECIPITATION PATTERN
                        .00      .00      .00      .00      .00      .00      .00      .00      .00      .00
                        .00      .00      .00      .00      .00      .00      .00      .00      .00      .00
                        .00      .00      .00      .00      .00      .00      .00      .00      .00      .00
                        .00      .00      .00      .00      .00      .00      .00      .00      .00      .00
                        .00      .00      .00      .00      .00      .00      .00      .00      .00      .00
                        .00      .00      .00      .00      .00      .00      .00      .00      .00      .00
                        .00      .00      .00      .00      .00      .00      .00      .00      .00      .00
                        .00      .00      .00      .00      .00      .00      .00      .00      .00      .00
                        .00      .00      .00      .00      .00      .00      .00      .00      .00      .00
                        .00      .00      .00      .00      .00      .00      .00      .00      .00      .00
                        .00      .00      .00      .00      .00      .00      .00      .00      .00      .00
                        .00      .00      .00      .00      .00      .00      .00      .00      .00      .00
                        .00      .00      .00      .00      .00      .00      .00      .01      .00      .01
                        .01      .01      .01      .01      .01      .01      .01      .01      .03      .03
                        .03      .09      .09      .09      .01      .01      .01      .01      .01      .01
                        .01      .01      .01      .01      .01      .01      .00      .00      .00      .00
                        .00      .00      .00      .00      .00      .00      .00      .00      .00      .00
                        .00      .00      .00      .00      .00      .00      .00      .00      .00      .00
                        .00      .00      .00      .00      .00      .00      .00      .00      .00      .00
                        .00      .00      .00      .00      .00      .00      .00      .00      .00      .00
                        .00      .00      .00      .00      .00      .00      .00      .00      .00      .00
                        .00      .00      .00      .00      .00      .00      .00      .00      .00      .00
                        .00      .00      .00      .00      .00      .00      .00      .00      .00      .00
                        .00      .00      .00      .00      .00      .00      .00      .00      .00      .00
                        .00      .00      .00      .00      .00      .00      .00      .00      .00      .00
                        .00      .00      .00      .00      .00      .00      .00      .00      .00      .00
                        .00      .00      .00      .00      .00      .00      .00      .00      .00      .00
                        .00      .00      .00      .00      .00      .00      .00      .00      .00      .00
                        .00      .00      .00      .00      .00      .00      .00      .00

   527 LG           GREEN AND AMPT LOSS RATE
                          STRTL          .25  STARTING LOSS
                            DTH          .25  MOISTURE DEFICIT
                           PSIF         4.90  WETTING FRONT SUCTION
                          XKSAT          .35  HYDRAULIC CONDUCTIVITY
                          RTIMP        29.00  PERCENT IMPERVIOUS AREA

   528 UC           CLARK UNITGRAPH
                             TC          .77  TIME OF CONCENTRATION
                              R          .50  STORAGE COEFFICIENT

   529 UA           ACCUMULATED-AREA VS. TIME,  11 ORDINATES
                          .0       5.0      16.0      30.0      65.0      77.0      84.0      90.0      94.0      97.0
                       100.0

                                                     ***

                                          UNIT HYDROGRAPH PARAMETERS
```



```
                                      CLARK    TC=    .77 HR,        R=    .50 HR
                                     SNYDER    TP=    .41 HR,       CP=    .47

                                               UNIT HYDROGRAPH
                                           36 END-OF-PERIOD ORDINATES
               7.        26.        59.       107.       138.       137.       130.       120.       109.        97.
              83.        70.        60.        50.        43.        36.        31.        26.        22.        18.
              16.        13.        11.         9.         8.         7.         6.         5.         4.         3.
               3.         2.         2.         2.         2.         1.

      ***             ***              ***              ***              ***

                              HYDROGRAPH AT STATION      CD4C

     TOTAL RAINFALL =     3.92, TOTAL LOSS =     1.99, TOTAL EXCESS =     1.93

   PEAK FLOW      TIME                            MAXIMUM AVERAGE FLOW
                                         6-HR        24-HR        72-HR      24.92-HR
 +   (CFS)        (HR)
                              (CFS)
 +    165.       12.33                    32.          10.           9.           9.
                            (INCHES)    1.589        1.916        1.918        1.918
                            (AC-FT)       16.          19.          19.          19.

                            CUMULATIVE AREA =     .19 SQ MI


*** *** *** *** *** *** *** *** *** *** *** *** *** *** *** *** *** *** *** *** *** *** *** *** *** *** *** *** *** *** *** *** *** ***


                **************
                *            *
   531 KK       *    CD4R    *
                *            *
                **************
                               DIVERT RETENTION VOLUME

    DT              DIVERSION
                         ISTAD      RETD4C  DIVERSION HYDROGRAPH IDENTIFICATION
                        DSTRMX       13.60  MAXIMUM VOLUME TO BE DIVERTED

    DI                  INFLOW         .00   1000.00  10000.00

    DQ            DIVERTED FLOW        .00   1000.00  10000.00

                                                                ***

      ***             ***              ***              ***              ***

                            DIVERSION HYDROGRAPH    RETD4C

   PEAK FLOW      TIME                            MAXIMUM AVERAGE FLOW
                                         6-HR        24-HR        72-HR      24.92-HR
 +   (CFS)        (HR)
                              (CFS)
 +    165.       12.33                    25.           7.           7.           7.
                            (INCHES)    1.244        1.342        1.342        1.342
                            (AC-FT)       13.          14.          14.          14.

                            CUMULATIVE AREA =     .19 SQ MI

      ***             ***              ***              ***              ***

                              HYDROGRAPH AT STATION      CD4R

   PEAK FLOW      TIME                            MAXIMUM AVERAGE FLOW
                                         6-HR        24-HR        72-HR      24.92-HR
 +   (CFS)        (HR)
                              (CFS)
 +     62.       13.00                    10.           3.           3.           3.
                            (INCHES)     .491         .576         .576         .576
                            (AC-FT)        5.           6.           6.           6.

                            CUMULATIVE AREA =     .19 SQ MI


*** *** *** *** *** *** *** *** *** *** *** *** *** *** *** *** *** *** *** *** *** *** *** *** *** *** *** *** *** *** *** *** *** ***


                **************
                *            *
   536 KK       *   CPCD4C   *
                *            *
                **************
                               COMBINE ROUTED FLOW FROM SUB-BASIN 67AC TO RUNOFF FROM SUB-BASIN CD4C

   538 HC           HYDROGRAPH COMBINATION
                         ICOMP           2  NUMBER OF HYDROGRAPHS TO COMBINE

                                                     ***
```

*** *** *** *** ***

HYDROGRAPH AT STATION CPCD4C

PEAK FLOW	TIME		MAXIMUM AVERAGE FLOW			
			6-HR	24-HR	72-HR	24.92-HR
+ (CFS)	(HR)					
		(CFS)				
+ 189.	13.92		62.	18.	17.	17.
		(INCHES)	.711	.821	.821	.821
		(AC-FT)	31.	35.	35.	35.

CUMULATIVE AREA = .81 SQ MI

*** ***

****

539 KK * RCD3C2 *

****

ROUTE FLOW FROM COMPUTATION POINT CPCD4C TO COMPUTATION POINT CPCD3C
CROSS-SECTION REVISED TO REFLECT URBANIZED CONDITIONS

HYDROGRAPH ROUTING DATA

542 RS STORAGE ROUTING

NSTPS	3	NUMBER OF SUBREACHES
ITYP	ELEV	TYPE OF INITIAL CONDITION
RSVRIC	-1.00	INITIAL CONDITION
X	.00	WORKING R AND D COEFFICIENT

543 RC NORMAL DEPTH CHANNEL

ANL	.035	LEFT OVERBANK N-VALUE
ANCH	.035	MAIN CHANNEL N-VALUE
ANR	.035	RIGHT OVERBANK N-VALUE
RLNTH	5200.	REACH LENGTH
SEL	.0024	ENERGY SLOPE
ELMAX	.0	MAX. ELEV. FOR STORAGE/OUTFLOW CALCULATION

CROSS-SECTION DATA

		--- LEFT OVERBANK --- +		------ MAIN CHANNEL ------- +			--- RIGHT OVERBANK ---		
545 RY	ELEVATION	988.00	987.00	986.00	983.00	983.00	986.00	987.00	988.00
544 RX	DISTANCE	.00	40.00	50.00	55.00	60.00	65.00	70.00	110.00

***

COMPUTED STORAGE-OUTFLOW-ELEVATION DATA

STORAGE	.00	.17	.37	.60	.85	1.13	1.44	1.77	2.14	2.53
OUTFLOW	.00	1.15	3.73	7.55	12.59	18.89	26.49	35.45	45.84	57.71
ELEVATION	983.00	983.26	983.53	983.79	984.05	984.32	984.58	984.84	985.11	985.37
STORAGE	2.95	3.40	3.89	4.49	5.23	6.08	7.24	9.04	11.50	14.63
OUTFLOW	71.12	86.14	105.20	128.33	154.81	185.24	217.79	261.32	318.74	392.90
ELEVATION	985.63	985.90	986.16	986.42	986.68	986.95	987.21	987.47	987.74	988.00

*** *** *** *** ***

HYDROGRAPH AT STATION RCD3C2

PEAK FLOW	TIME		MAXIMUM AVERAGE FLOW			
			6-HR	24-HR	72-HR	24.92-HR
+ (CFS)	(HR)					
		(CFS)				
+ 166.	14.33		61.	18.	17.	17.
		(INCHES)	.698	.808	.808	.808
		(AC-FT)	30.	35.	35.	35.

PEAK STORAGE	TIME	MAXIMUM AVERAGE STORAGE			
		6-HR	24-HR	72-HR	24.92-HR
+ (AC-FT)	(HR)				
2.	14.33	1.	0.	0.	0.

PEAK STAGE	TIME	MAXIMUM AVERAGE STAGE			
		6-HR	24-HR	72-HR	24.92-HR
+ (FEET)	(HR)				
986.78	14.33	985.23	983.78	983.75	983.75

CUMULATIVE AREA = .81 SQ MI

*** ***

****

546 KK * CD3C *

****

SUB-BASIN CD3C
24-HOUR SCS TYPE II RAINFALL WAS USED TO FIND TC & R FOR THIS BASIN
THIS BASIN USED RAINFALL REDUCTION FACTOR OF .934
L = 1.15 Kb = .044 Adj. Slope = 10.0

SUBBASIN RUNOFF DATA

551 BA SUBBASIN CHARACTERISTICS
TAREA .48 SUBBASIN AREA

PRECIPITATION DATA

32 PB STORM 3.92 BASIN TOTAL PRECIPITATION

32 PI INCREMENTAL PRECIPITATION PATTERN

.00	.00	.00	.00	.00	.00	.00	.00	.00	.00
.00	.00	.00	.00	.00	.00	.00	.00	.00	.00
.00	.00	.00	.00	.00	.00	.00	.00	.00	.00
.00	.00	.00	.00	.00	.00	.00	.00	.00	.00
.00	.00	.00	.00	.00	.00	.00	.00	.00	.00
.00	.00	.00	.00	.00	.00	.00	.00	.00	.00
.00	.00	.00	.00	.00	.00	.00	.00	.00	.00
.00	.00	.00	.00	.00	.00	.00	.00	.00	.00
.00	.00	.00	.00	.00	.00	.00	.00	.00	.00
.00	.00	.00	.00	.00	.00	.00	.00	.00	.00
.00	.00	.00	.00	.00	.00	.00	.00	.00	.00
.00	.00	.00	.00	.00	.00	.00	.00	.00	.00
.00	.00	.00	.00	.00	.00	.00	.01	.00	.01
.01	.01	.01	.01	.01	.01	.01	.01	.03	.03
.03	.09	.09	.09	.01	.01	.01	.01	.01	.01
.01	.01	.01	.01	.01	.01	.00	.00	.00	.00
.00	.00	.00	.00	.00	.00	.00	.00	.00	.00
.00	.00	.00	.00	.00	.00	.00	.00	.00	.00
.00	.00	.00	.00	.00	.00	.00	.00	.00	.00
.00	.00	.00	.00	.00	.00	.00	.00	.00	.00
.00	.00	.00	.00	.00	.00	.00	.00	.00	.00
.00	.00	.00	.00	.00	.00	.00	.00	.00	.00
.00	.00	.00	.00	.00	.00	.00	.00	.00	.00
.00	.00	.00	.00	.00	.00	.00	.00	.00	.00
.00	.00	.00	.00	.00	.00	.00	.00	.00	.00
.00	.00	.00	.00	.00	.00	.00	.00	.00	.00
.00	.00	.00	.00	.00	.00	.00	.00	.00	.00
.00	.00	.00	.00	.00	.00	.00	.00	.00	.00
.00	.00	.00	.00	.00	.00	.00	.00		

552 LG GREEN AND AMPT LOSS RATE

STRTL	.24	STARTING LOSS
DTH	.15	MOISTURE DEFICIT
PSIF	7.00	WETTING FRONT SUCTION
XKSAT	.14	HYDRAULIC CONDUCTIVITY
RTIMP	33.00	PERCENT IMPERVIOUS AREA

553 UC CLARK UNITGRAPH

TC	.93	TIME OF CONCENTRATION
R	.58	STORAGE COEFFICIENT

554 UA ACCUMULATED-AREA VS. TIME, 11 ORDINATES

.0	5.0	16.0	30.0	65.0	77.0	84.0	90.0	94.0	97.0
100.0									

***

UNIT HYDROGRAPH PARAMETERS
CLARK TC= .93 HR, R= .58 HR
SNYDER TP= .50 HR, CP= .48

UNIT HYDROGRAPH
42 END-OF-PERIOD ORDINATES

11.	44.	91.	171.	260.	298.	295.	283.	266.	246.
226.	204.	177.	154.	133.	115.	100.	86.	75.	65.
56.	48.	42.	36.	31.	27.	24.	20.	18.	15.
13.	11.	10.	9.	7.	6.	6.	5.	4.	4.
3.	3.								

*** *** *** *** ***

HYDROGRAPH AT STATION CD3C

TOTAL RAINFALL = 3.92, TOTAL LOSS = 1.60, TOTAL EXCESS = 2.32

PEAK FLOW	TIME		MAXIMUM AVERAGE FLOW			
			6-HR	24-HR	72-HR	24.92-HR
+ (CFS)	(HR)					
		(CFS)				
+ 428.	12.42		100.	30.	29.	29.
		(INCHES)	1.935	2.307	2.310	2.310
		(AC-FT)	50.	59.	59.	59.

CUMULATIVE AREA = .48 SQ MI

*** ***

```
                ***************
                *             *
556 KK          *     CD3R    *
                *             *
                ***************
                              DIVERT RETENTION VOLUME
                              RELAXED RETENTION VOLUME FROM 35.2 AC-FT.

     DT          DIVERSION
                      ISTAD      RETD3C  DIVERSION HYDROGRAPH IDENTIFICATION
                     DSTRMX       32.60  MAXIMUM VOLUME TO BE DIVERTED

     DI             INFLOW         .00   1000.00  10000.00

     DQ       DIVERTED FLOW        .00   1000.00  10000.00

                                                                  ***

      ***             ***             ***             ***             ***

                              DIVERSION HYDROGRAPH   RETD3C

  PEAK FLOW      TIME                                MAXIMUM AVERAGE FLOW
                                              6-HR        24-HR        72-HR      24.92-HR
+   (CFS)        (HR)
                                (CFS)
+     428.      12.42                60.          16.          16.          16.
                              (INCHES)         1.171        1.273        1.273        1.273
                              (AC-FT)             30.          33.          33.          33.

                              CUMULATIVE AREA =      .48 SQ MI

      ***             ***             ***             ***             ***

                              HYDROGRAPH AT STATION     CD3R

  PEAK FLOW      TIME                                MAXIMUM AVERAGE FLOW
                                              6-HR        24-HR        72-HR      24.92-HR
+   (CFS)        (HR)
                                (CFS)
+     321.      12.83                48.          13.          13.          13.
                              (INCHES)         .932        1.036        1.036        1.036
                              (AC-FT)             24.          27.          27.          27.

                              CUMULATIVE AREA =      .48 SQ MI


*** *** *** *** *** *** *** *** *** *** *** *** *** *** *** *** *** *** *** *** *** *** *** *** *** *** *** *** *** *** *** *** *** *** *** *** ***


                ***************
                *             *
562 KK          *    CPCD3C   *
                *             *
                ***************
                              COMBINE ROUTED FLOW FROM COMPUTATION POINT CPCD4C, ROUTED FLOW FROM DIVERSION
                              POINT AT BASELINE ROAD WITH RUNOFF FROM SUB-BASIN CD3C

565 HC                  HYDROGRAPH COMBINATION
                             ICOMP           3  NUMBER OF HYDROGRAPHS TO COMBINE

                                                                  ***

      ***             ***             ***             ***             ***

                              HYDROGRAPH AT STATION    CPCD3C

  PEAK FLOW      TIME                                MAXIMUM AVERAGE FLOW
                                              6-HR        24-HR        72-HR      24.92-HR
+   (CFS)        (HR)
                                (CFS)
+     900.      14.25                439.         142.         137.         137.
                              (INCHES)         .441         .570         .570         .570
                              (AC-FT)            218.         282.         282.         282.

                              CUMULATIVE AREA =     9.27 SQ MI
```


1

RUNOFF SUMMARY
FLOW IN CUBIC FEET PER SECOND
TIME IN HOURS, AREA IN SQUARE MILES

	OPERATION	STATION	PEAK FLOW	TIME OF PEAK	AVERAGE FLOW FOR MAXIMUM PERIOD 6-HOUR	24-HOUR	72-HOUR	BASIN AREA	MAXIMUM STAGE	TIME OF MAX STAGE
+	HYDROGRAPH AT	VR47C	460.	12.67	152.	45.	44.	.87		
+	DIVERSION TO	RET47C	460.	14.25	127.	34.	33.	.87		
+	HYDROGRAPH AT	VR47R	157.	14.25	38.	11.	11.	.87		
+	ROUTED TO	RBR511	97.	14.92	36.	11.	10.	.87		
+									1003.89	14.92
+	HYDROGRAPH AT	AVR51C	261.	12.33	55.	16.	16.	.28		
+	DIVERSION TO	RET51C	261.	13.00	41.	11.	10.	.28		
+	HYDROGRAPH AT	AVR51R	133.	13.00	19.	6.	5.	.28		
+	ROUTED TO	RBR512	82.	13.58	19.	5.	5.	.28		
+									1008.64	13.58
+	HYDROGRAPH AT	BR51C	432.	12.58	122.	37.	36.	.70		
+	DIVERSION TO	RET159	432.	13.58	94.	25.	25.	.70		
+	HYDROGRAPH AT	BR51R	196.	13.58	40.	12.	11.	.70		
+	3 COMBINED AT	CB51C	278.	13.58	92.	28.	27.	1.85		
+	HYDROGRAPH AT	DR43C	1391.	12.17	176.	55.	53.	.92		
+	DIVERSION TO	RET43C	451.	12.17	45.	14.	14.	.92		
+	HYDROGRAPH AT	DR43R	1391.	12.17	150.	41.	39.	.92		
+	ROUTED TO	43BASN	20.	12.17	20.	11.	10.	.92		
+									7.83	16.75
+	ROUTED TO	ROA51A	20.	12.67	20.	11.	10.	.92		
+									1008.54	12.67
+	ROUTED TO	ROA51B	20.	15.67	20.	10.	10.	.92		
+									1009.21	16.33
+	HYDROGRAPH AT	OA51B	2353.	12.00	191.	57.	55.	1.03		
+	DIVERSION TO	RET51	2353.	12.17	153.	41.	39.	1.03		
+	HYDROGRAPH AT	OA51R	900.	12.17	55.	16.	16.	1.03		
+	ROUTED TO	DRBASN	20.	13.50	20.	10.	10.	1.03		
+									2.15	15.42
+	HYDROGRAPH AT	ER47B	777.	12.00	63.	19.	18.	.34		
+	ROUTED TO	ERBASN	20.	11.92	20.	12.	12.	.34		
+									3.16	13.00
+	ROUTED TO	RER47B	20.	11.92	20.	12.	12.	.34		
+									1008.00	.00
+	3 COMBINED AT	CDR51	60.	15.58	60.	32.	31.	2.29		
	ROUTED TO									

+		RDR51A	60.	15.58	60.	32.	31.	2.29		
+									1008.00	.00
	HYDROGRAPH AT									
+		SM51C	327.	12.42	79.	22.	22.	.51		
	DIVERSION TO									
+		RET51C	327.	12.92	44.	12.	11.	.51		
	HYDROGRAPH AT									
+		SM51R	248.	12.92	40.	11.	10.	.51		
	ROUTED TO									
+		RB2591	198.	13.25	40.	11.	10.	.51		
+									1028.07	13.25
	2 COMBINED AT									
+		C51SM	255.	13.25	99.	43.	41.	2.80		
	ROUTED TO									
+		RDR51B	255.	13.25	99.	43.	41.	2.80		
+									1006.00	13.08
	ROUTED TO									
+		BRBASN	50.	13.33	50.	26.	25.	2.80		
+									4.04	24.92
	ROUTED TO									
+		DBR51	50.	13.50	50.	26.	25.	2.80		
	2 COMBINED AT									
+		CB51D	328.	13.58	142.	54.	52.	4.66		
	ROUTED TO									
+		RB1591	220.	14.33	137.	51.	49.	4.66		
+									996.33	14.33
	HYDROGRAPH AT									
+		AVR55C	152.	12.58	51.	15.	14.	.24		
	DIVERSION TO									
+		RET55C	152.	15.17	48.	13.	12.	.24		
	HYDROGRAPH AT									
+		AVR55R	23.	15.17	7.	2.	2.	.24		
	ROUTED TO									
+		RB1592	13.	16.25	6.	2.	2.	.24		
+									999.96	16.25
	HYDROGRAPH AT									
+		BR159C	300.	12.67	110.	33.	32.	.68		
	DIVERSION TO									
+		RET159	300.	13.67	73.	20.	19.	.68		
	HYDROGRAPH AT									
+		BR159R	193.	13.67	48.	14.	13.	.68		
	HYDROGRAPH AT									
+		VR59C	117.	12.75	39.	10.	10.	.23		
	ROUTED TO									
+		RB1593	114.	13.00	39.	10.	10.	.23		
+									1000.83	13.00
	4 COMBINED AT									
+		CB159N	399.	14.17	211.	76.	73.	5.81		
	HYDROGRAPH AT									
+		ER55B	205.	12.42	46.	14.	13.	.26		
	DIVERSION TO									
+		RET55	205.	13.25	36.	10.	9.	.26		
	HYDROGRAPH AT									
+		ER55R	82.	13.25	13.	4.	4.	.26		
	ROUTED TO									
+		RE59B	55.	13.67	13.	4.	4.	.26		
+									1021.79	13.67
	HYDROGRAPH AT									
+		ER59B	274.	12.25	64.	21.	21.	.26		
	DIVERSION TO									
+		RET59	274.	12.67	41.	12.	11.	.26		
	HYDROGRAPH AT									
+		ER59R	194.	12.67	33.	10.	9.	.26		
	2 COMBINED AT									
+		CER59B	194.	12.67	46.	14.	13.	.51		
	DIVERSION TO									
+		DIR63B	149.	12.58	18.	4.	4.	.51		

	HYDROGRAPH AT									
+		RIR63B	45.	12.58	28.	9.	9.	.51		
	HYDROGRAPH AT									
+		IR63B	127.	12.25	30.	10.	10.	.12		
	DIVERSION TO									
+		RET63	127.	12.75	20.	6.	5.	.12		
	HYDROGRAPH AT									
+		IR63	79.	12.75	16.	5.	4.	.12		
	2 COMBINED AT									
+		CIR63B	124.	12.75	43.	14.	13.	.64		
	ROUTED TO									
+		RIR65C	112.	13.08	43.	14.	13.	.64		
+									4.31	13.08
	HYDROGRAPH AT									
+		IR65C	112.	12.33	26.	8.	7.	.17		
	DIVERSION TO									
+		RET65C	112.	17.17	26.	7.	7.	.17		
	HYDROGRAPH AT									
+		IR65R	2.	17.17	1.	0.	0.	.17		
	2 COMBINED AT									
+		CIR65C	112.	13.08	43.	14.	14.	.81		
	ROUTED TO									
+		RIRDC	92.	13.58	42.	14.	13.	.81		
+									1012.05	13.58
	DIVERSION TO									
+		RIR65C	61.	13.33	29.	10.	10.	.81		
	HYDROGRAPH AT									
+		DIIRDC	31.	13.33	13.	3.	3.	.81		
	HYDROGRAPH AT									
+		IRDC	397.	12.42	110.	36.	34.	.52		
	DIVERSION TO									
+		RETRDC	397.	13.17	78.	22.	21.	.52		
	HYDROGRAPH AT									
+		IRDR	225.	13.17	47.	14.	13.	.52		
	2 COMBINED AT									
+		CIRDC	234.	13.17	60.	17.	17.	1.33		
	ROUTED TO									
+		RIRSMC	219.	13.42	59.	17.	16.	1.33		
+									1001.79	13.42
	HYDROGRAPH AT									
+		IRSMC	285.	12.17	42.	13.	13.	.24		
	DIVERSION TO									
+		RETSMC	285.	12.83	36.	10.	9.	.24		
	HYDROGRAPH AT									
+		IRSMR	74.	12.83	11.	3.	3.	.24		
	2 COMBINED AT									
+		CIRSMS	243.	13.42	69.	21.	20.	1.58		
	2 COMBINED AT									
+		CIRSMC	536.	14.08	281.	97.	93.	7.38		
	HYDROGRAPH AT									
+		CD2C	337.	12.75	128.	38.	37.	.60		
	DIVERSION TO									
+		RET2C	337.	13.50	74.	20.	19.	.60		
	HYDROGRAPH AT									
+		CD2R	262.	13.50	66.	18.	17.	.60		
	2 COMBINED AT									
+		CCD2C	738.	13.67	346.	115.	111.	7.98		
	ROUTED TO									
+		RCD3C1	688.	14.25	341.	111.	107.	7.98		
+									983.37	14.25
	HYDROGRAPH AT									
+		A67AC	291.	12.75	111.	34.	33.	.62		
	DIVERSION TO									
+		RET67A	291.	13.58	70.	19.	19.	.62		
	HYDROGRAPH AT									

+		A67AR	205.	13.58	53.	15.	14.	.62	
	ROUTED TO								
+		RCD4C1	171.	13.92	53.	15.	14.	.62	
+									986.82 13.92
	HYDROGRAPH AT								
+		CD4C	165.	12.33	32.	10.	9.	.19	
	DIVERSION TO								
+		RETD4C	165.	13.00	25.	7.	7.	.19	
	HYDROGRAPH AT								
+		CD4R	62.	13.00	10.	3.	3.	.19	
	2 COMBINED AT								
+		CPCD4C	189.	13.92	62.	18.	17.	.81	
	ROUTED TO								
+		RCD3C2	166.	14.33	61.	18.	17.	.81	
+									986.78 14.33
	HYDROGRAPH AT								
+		CD3C	428.	12.42	100.	30.	29.	.48	
	DIVERSION TO								
+		RETD3C	428.	12.83	60.	16.	16.	.48	
	HYDROGRAPH AT								
+		CD3R	321.	12.83	48.	13.	13.	.48	
	3 COMBINED AT								
+		CPCD3C	900.	14.25	439.	142.	137.	9.27	

1

SUMMARY OF KINEMATIC WAVE - MUSKINGUM-CUNGE ROUTING
(FLOW IS DIRECT RUNOFF WITHOUT BASE FLOW)

						INTERPOLATED TO COMPUTATION INTERVAL			
ISTAQ	ELEMENT	DT	PEAK	TIME TO PEAK	VOLUME	DT	PEAK	TIME TO PEAK	VOLUME
		(MIN)	(CFS)	(MIN)	(IN)	(MIN)	(CFS)	(MIN)	(IN)
DBR51	MANE	1.68	50.00	805.57	.35	5.00	50.00	810.00	.34

CONTINUITY SUMMARY (AC-FT) - INFLOW= .5184E+02 EXCESS= .0000E+00 OUTFLOW= .5163E+02 BASIN STORAGE= .2459E+00 PERCENT ERROR= -.1

*** NORMAL END OF HEC-1 ***

Alt 4

51st Avenue Storm Drain (South Mt. to Baseline)
Worksheet for Circular Channel

Project Description	
Worksheet	Alt 4A 51st Avneue Storm Drain (South Mt. to
Flow Element	Circular Channel
Method	Manning's Formula
Solve For	Channel Depth

Input Data		
Mannings Coeffic	0.013	
Slope	005300	ft/ft
Diameter	84	in
Discharge	254.00	cfs

Results		
Depth	3.69	ft
Flow Area	20.6	ft²
Wetted Perime	11.37	ft
Top Width	6.99	ft
Critical Depth	4.18	ft
Percent Full	52.7	%
Critical Slope	0.003556	ft/ft
Velocity	12.35	ft/s
Velocity Head	2.37	ft
Specific Energ:	6.06	ft
Froude Numbe	1.27	
Maximum Disc	500.26	cfs
Discharge Full	465.05	cfs
Slope Full	0.001581	ft/ft
Flow Type	Supercritical	

51st Avenue Storm Drain (South Mt. Ave. to Baseline)
Cross Section for Circular Channel

Project Description	
Worksheet	Alt 4A 51st Avneue Storm Drain (South Mt. to
Flow Element	Circular Channel
Method	Manning's Formula
Solve For	Channel Depth

Section Data		
Mannings Coeffic	0.013	
Slope	005300	ft/ft
Depth	3.69	ft
Diameter	84	in
Discharge	254.00	cfs

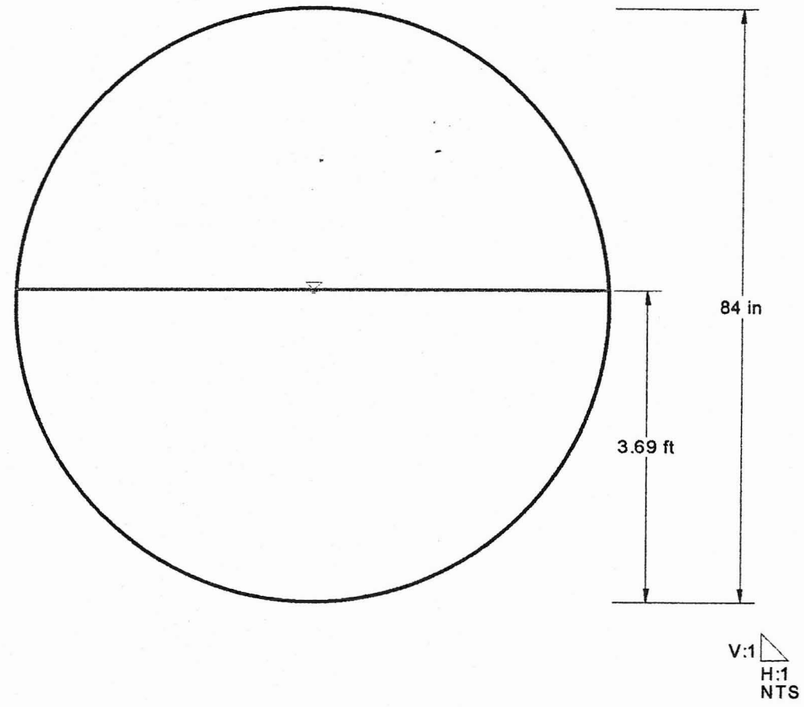

51st Avenue Storm Drain (Dobbins to South Mt. Avenue)
Worksheet for Circular Channel

Project Description	
Worksheet	Alt 6A - 51st Avenue Storm Drain (Dobbins to Soutl
Flow Element	Circular Channel
Method	Manning's Formula
Solve For	Channel Depth

Input Data		
Mannings Coeffic	0.013	
Slope	005300	ft/ft
Diameter	60	in
Discharge	60.00	cfs

Results		
Depth	1.93	ft
Flow Area	7.0	ft²
Wetted Perime	6.71	ft
Top Width	4.87	ft
Critical Depth	2.18	ft
Percent Full	38.7	%
Critical Slope	0.003428	ft/ft
Velocity	8.56	ft/s
Velocity Head	1.14	ft
Specific Energ	3.07	ft
Froude Numbe	1.26	
Maximum Disc	203.95	cfs
Discharge Full	189.59	cfs
Slope Full	0.000531	ft/ft
Flow Type	Supercritical	

51st Avenue Storm Drain (Dobbins to South Mt. Avenue)
Cross Section for Circular Channel

Project Description	
Worksheet	Alt 6A - 51st Avenue Storm Drain (Dobbins to Soutl
Flow Element	Circular Channel
Method	Manning's Formula
Solve For	Channel Depth

Section Data		
Mannings Coeffic	0.013	
Slope	005300	ft/ft
Depth	1.93	ft
Diameter	60	in
Discharge	60.00	cfs

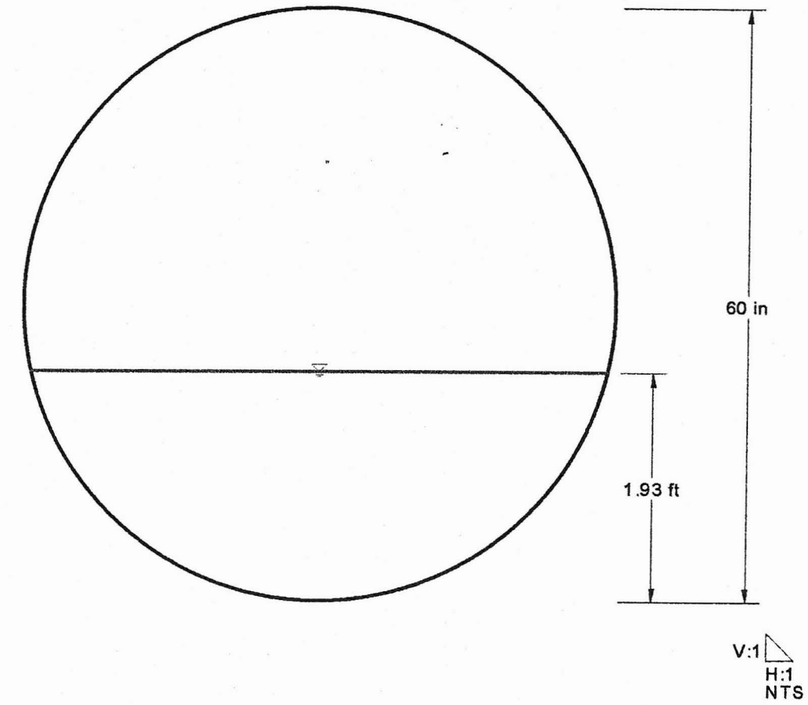

51st Avenue Storm Drain (West on Elliot to Dobbins)
Worksheet for Circular Channel

Project Description	
Worksheet	Alt 4A - 51st Avenue Storm Drain (West on Elliot t
Flow Element	Circular Channel
Method	Manning's Formula
Solve For	Channel Depth

Input Data		
Mannings Coeffic	0.013	
Slope	003400	ft/ft
Diameter	36	in
Discharge	20.00	cfs

Results		
Depth	1.53	ft
Flow Area	3.6	ft²
Wetted Perime	4.76	ft
Top Width	3.00	ft
Critical Depth	1.44	ft
Percent Full	50.8	%
Critical Slope	0.004184	ft/ft
Velocity	5.54	ft/s
Velocity Head	0.48	ft
Specific Energy	2.00	ft
Froude Numbe	0.89	
Maximum Disc	41.83	cfs
Discharge Full	38.89	cfs
Slope Full	0.000899	ft/ft
Flow Type	Subcritical	

© Haestad Methods, Inc.
Project Engineering Consultants Ltd
37 Brookside Road Waterbury, CT 06708 USA (203) 755-1666

51st Avenue Storm Drain (West on Elliot to Dobbins)
Cross Section for Circular Channel

Project Description	
Worksheet	Alt 4A - 51st Avenue Storm Drain (West on Elliot t
Flow Element	Circular Channel
Method	Manning's Formula
Solve For	Channel Depth

Section Data		
Mannings Coeffic	0.013	
Slope	003400	ft/ft
Depth	1.53	ft
Diameter	36	in
Discharge	20.00	cfs

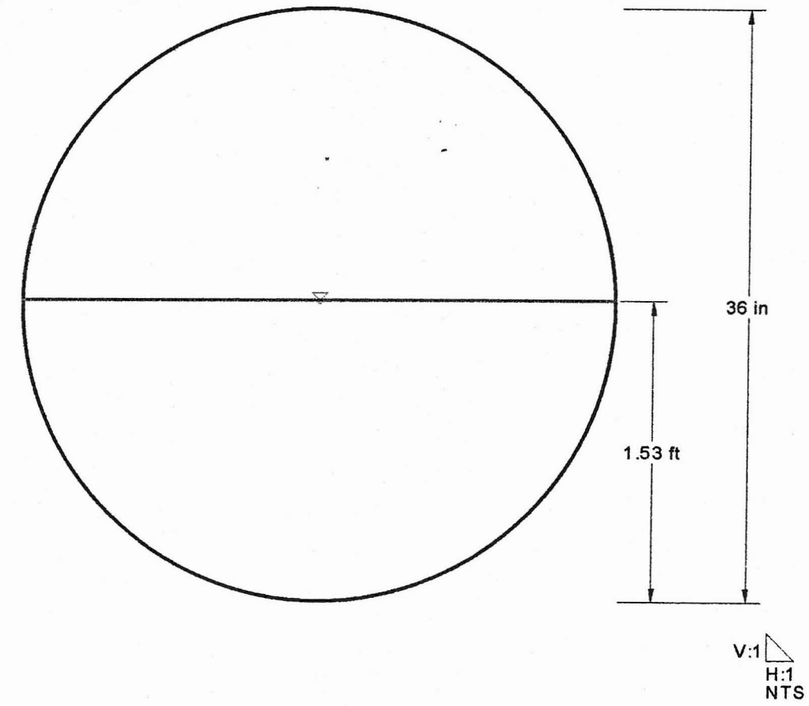

© Haestad Methods, Inc.
Project Engineering Consultants Ltd
37 Brookside Road Waterbury, CT 06708 USA (203) 755-1666

Dobbins Road Storm Drain (47th to 51st)
Worksheet for Circular Channel

Project Description	
Worksheet	Alt 4A - Dobbins Road Storm Drain (47tl
Flow Element	Circular Channel
Method	Manning's Formula
Solve For	Channel Depth

Input Data		
Mannings Coeffic	0.013	
Slope	003300	ft/ft
Diameter	36	in
Discharge	20.00	cfs

Results		
Depth	1.54	ft
Flow Area	3.7	ft²
Wetted Perime	4.79	ft
Top Width	3.00	ft
Critical Depth	1.44	ft
Percent Full	51.3	%
Critical Slope	0.004184	ft/ft
Velocity	5.48	ft/s
Velocity Head	0.47	ft
Specific Energ	2.01	ft
Froude Numbe	0.88	
Maximum Disc	41.21	cfs
Discharge Full	38.31	cfs
Slope Full	0.000899	ft/ft
Flow Type	Subcritical	

© Haestad Methods, Inc.
Project Engineering Consultants Ltd
37 Brookside Road Waterbury, CT 06708 USA (203) 755-1666

Dobbins Road Storm Drain (47th to 51st)
Cross Section for Circular Channel

Project Description	
Worksheet	Alt 4A - Dobbins Road Storm Drain (47tl
Flow Element	Circular Channel
Method	Manning's Formula
Solve For	Channel Depth

Section Data		
Mannings Coeffic	0.013	
Slope	003300	ft/ft
Depth	1.54	ft
Diameter	36	in
Discharge	20.00	cfs

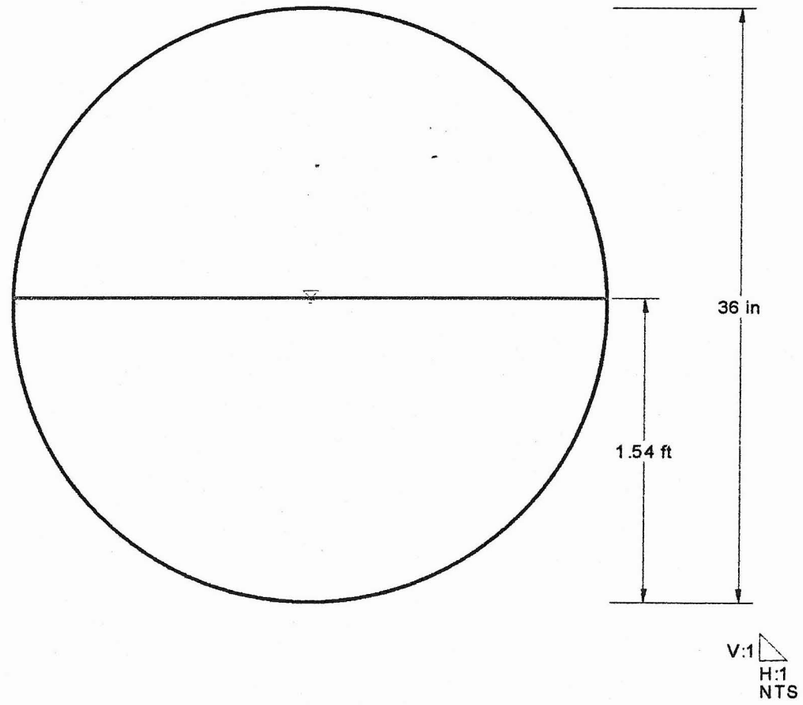

© Haestad Methods, Inc.
Project Engineering Consultants Ltd
37 Brookside Road Waterbury, CT 06708 USA (203) 755-1666

Dobbins Road Storm Drain (43rd to 47th)
Worksheet for Circular Channel

Project Description	
Worksheet	Alt 4A - Dobbins Road Storm Drain (43r
Flow Element	Circular Channel
Method	Manning's Formula
Solve For	Channel Depth

Input Data		
Mannings Coeffic	0.013	
Slope	004200	ft/ft
Diameter	36	in
Discharge	20.00	cfs

Results		
Depth	1.43	ft
Flow Area	3.3	ft²
Wetted Perime	4.58	ft
Top Width	3.00	ft
Critical Depth	1.44	ft
Percent Full	47.8	%
Critical Slope	0.004184	ft/ft
Velocity	6.00	ft/s
Velocity Head	0.56	ft
Specific Energ	1.99	ft
Froude Numbe	1.00	
Maximum Disc	46.50	cfs
Discharge Full	43.22	cfs
Slope Full	0.000899	ft/ft
Flow Type	Supercritical	

Dobbins Road Storm Drain (43rd to 47th)
Cross Section for Circular Channel

Project Description	
Worksheet	Alt 4A - Dobbins Road Storm Drain (43r
Flow Element	Circular Channel
Method	Manning's Formula
Solve For	Channel Depth

Section Data		
Mannings Coeffic	0.013	
Slope	004200	ft/ft
Depth	1.43	ft
Diameter	36	in
Discharge	20.00	cfs

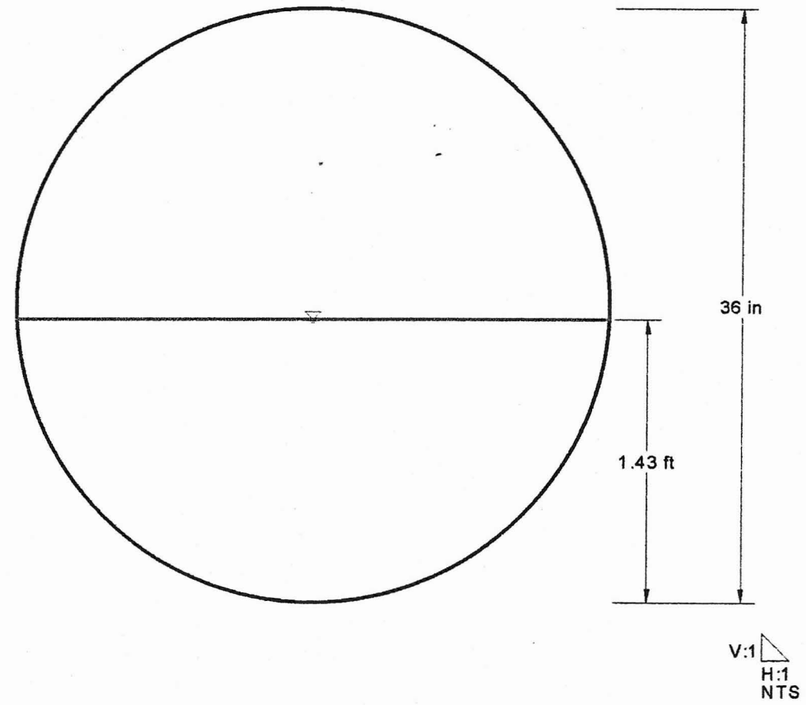

Western Canal Channel (West)
Worksheet for Trapezoidal Channel

Project Description	
Worksheet	Alt 4A Western Canal Channe
Flow Element	Trapezoidal Channel
Method	Manning's Formula
Solve For	Channel Depth

Input Data		
Mannings Coeffic	0.035	
Slope	002000	ft/ft
Left Side Slope	5.00	H : V
Right Side Slope	5.00	H : V
Bottom Width	10.00	ft
Discharge	800.00	cfs

Results		
Depth	5.40	ft
Flow Area	199.5	ft²
Wetted Perime	65.03	ft
Top Width	63.96	ft
Critical Depth	3.50	ft
Critical Slope	0.014136	ft/ft
Velocity	4.01	ft/s
Velocity Head	0.25	ft
Specific Energ	5.65	ft
Froude Numbe	0.40	
Flow Type	Subcritical	

Western Canal Channel (West)
Cross Section for Trapezoidal Channel

Project Description	
Worksheet	Alt 4A Western Canal Channe
Flow Element	Trapezoidal Channel
Method	Manning's Formula
Solve For	Channel Depth

Section Data		
Mannings Coeffic	0.035	
Slope	002000	ft/ft
Depth	5.40	ft
Left Side Slope	5.00	H : V
Right Side Slope	5.00	H : V
Bottom Width	10.00	ft
Discharge	800.00	cfs

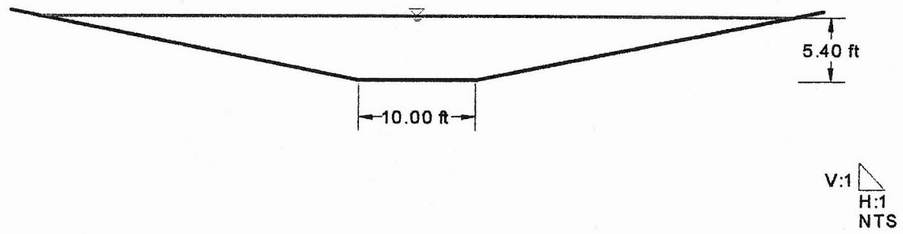

Western Canal Channel East
Worksheet for Trapezoidal Channel

Project Description	
Worksheet	Alt 4A - Western Canal Channe
Flow Element	Trapezoidal Channel
Method	Manning's Formula
Solve For	Channel Depth

Input Data		
Mannings Coeffic	0.035	
Slope	002000	ft/ft
Left Side Slope	5.00	H : V
Right Side Slope	5.00	H : V
Bottom Width	10.00	ft
Discharge	400.00	cfs

Results		
Depth	3.98	ft
Flow Area	119.1	ft²
Wetted Perim	50.60	ft
Top Width	49.82	ft
Critical Depth	2.49	ft
Critical Slope	0.015552	ft/ft
Velocity	3.36	ft/s
Velocity Head	0.18	ft
Specific Ener	4.16	ft
Froude Numb	0.38	
Flow Type	Subcritical	

Western Canal Channel (East)
Cross Section for Trapezoidal Channel

Project Description	
Worksheet	Alt 4A - Western Canal Channe
Flow Element	Trapezoidal Channel
Method	Manning's Formula
Solve For	Channel Depth

Section Data		
Mannings Coeffic	0.035	
Slope	002000	ft/ft
Depth	3.98	ft
Left Side Slope	5.00	H : V
Right Side Slope	5.00	H : V
Bottom Width	10.00	ft
Discharge	400.00	cfs

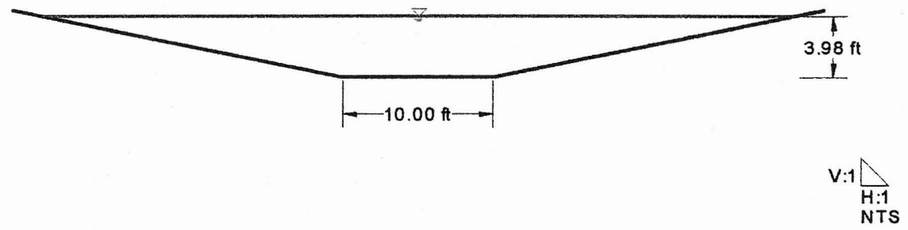

Pipline Connection to Laveen Conveyance Channel
Worksheet for Circular Channel

Project Description	
Worksheet	Alt 4A Connection to
Flow Element	Circular Channel
Method	Manning's Formula
Solve For	Channel Depth

Input Data		
Mannings Coeffic	0.013	
Slope	003000	ft/ft
Diameter	48	in
Discharge	50.00	cfs

Results		
Depth	2.32	ft
Flow Area	7.5	ft²
Wetted Perime	6.92	ft
Top Width	3.95	ft
Critical Depth	2.12	ft
Percent Full	57.9	%
Critical Slope	0.003977	ft/ft
Velocity	6.63	ft/s
Velocity Head	0.68	ft
Specific Energ:	3.00	ft
Froude Numbe	0.85	
Maximum Disc	84.63	cfs
Discharge Full	78.67	cfs
Slope Full	0.001212	ft/ft
Flow Type	Subcritical	

Pipeline Connection To Laveen Conveyance Channel
Cross Section for Circular Channel

Project Description	
Worksheet	Alt 4A Connection to
Flow Element	Circular Channel
Method	Manning's Formula
Solve For	Channel Depth

Section Data		
Mannings Coeffic	0.013	
Slope	003000	ft/ft
Depth	2.32	ft
Diameter	48	in
Discharge	50.00	cfs

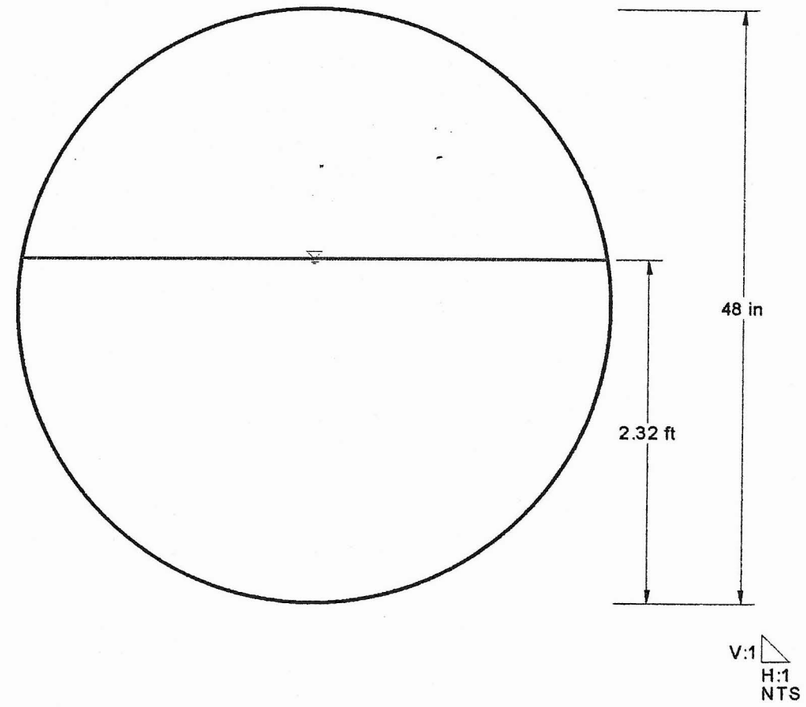

Freeway Channel (Dobbins @ 59th)
Worksheet for Trapezoidal Channel

Project Description	
Worksheet	Alt 4A - Freeway Channel (Dobbins Road
Flow Element	Trapezoidal Channel
Method	Manning's Formula
Solve For	Channel Depth

Input Data		
Mannings Coeffic	0.013	
Slope	001500	ft/ft
Left Side Slope	4.00	H : V
Right Side Slope	4.00	H : V
Bottom Width	4.00	ft
Discharge	188.00	cfs

Results		
Depth	2.46	ft
Flow Area	33.9	ft²
Wetted Perim	24.25	ft
Top Width	23.64	ft
Critical Depth	2.23	ft
Critical Slope	0.002321	ft/ft
Velocity	5.54	ft/s
Velocity Head	0.48	ft
Specific Energ	2.93	ft
Froude Numb	0.82	
Flow Type	Subcritical	

© Haestad Methods, Inc.
Project Engineering Consultants Ltd
37 Brookside Road Waterbury, CT 06708 USA (203) 755-1666

Freeway Channel (Dobbins @ 59th)
Cross Section for Trapezoidal Channel

Project Description	
Worksheet	Alt 4A - Freeway Channel (Dobbins Road
Flow Element	Trapezoidal Channel
Method	Manning's Formula
Solve For	Channel Depth

Section Data		
Mannings Coeffic	0.013	
Slope	001500	ft/ft
Depth	2.46	ft
Left Side Slope	4.00	H : V
Right Side Slope	4.00	H : V
Bottom Width	4.00	ft
Discharge	188.00	cfs

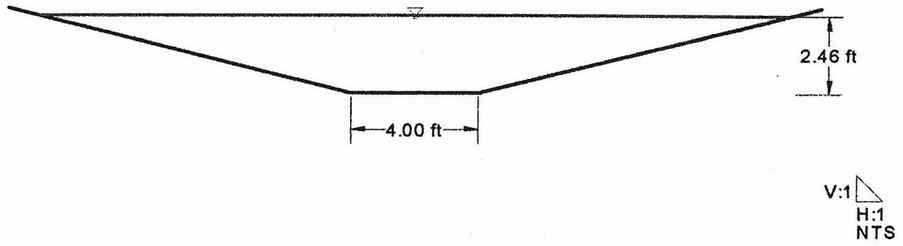

© Haestad Methods, Inc.
Project Engineering Consultants Ltd
37 Brookside Road Waterbury, CT 06708 USA (203) 755-1666

Freeway Channel (Elliot @ 59th)
Worksheet for Trapezoidal Channel

Project Description	
Worksheet	Freway Channel (Elliot Road @ 5
Flow Element	Trapezoidal Channel
Method	Manning's Formula
Solve For	Channel Depth

Input Data		
Mannings Coeffic	0.013	
Slope	001000	ft/ft
Left Side Slope	4.00	H : V
Right Side Slope	4.00	H : V
Bottom Width	4.00	ft
Discharge	116.00	cfs

Results		
Depth	2.17	ft
Flow Area	27.5	ft²
Wetted Perim	21.91	ft
Top Width	21.37	ft
Critical Depth	1.77	ft
Critical Slope	0.002476	ft/ft
Velocity	4.21	ft/s
Velocity Head	0.28	ft
Specific Energ	2.45	ft
Froude Numb	0.65	
Flow Type	Subcritical	

Freeway Channel (Elliot @ 59th)
Cross Section for Trapezoidal Channel

Project Description	
Worksheet	Freway Channel (Elliot Road @ 5
Flow Element	Trapezoidal Channel
Method	Manning's Formula
Solve For	Channel Depth

Section Data		
Mannings Coeffic	0.013	
Slope	001000	ft/ft
Depth	2.17	ft
Left Side Slope	4.00	H : V
Right Side Slope	4.00	H : V
Bottom Width	4.00	ft
Discharge	116.00	cfs

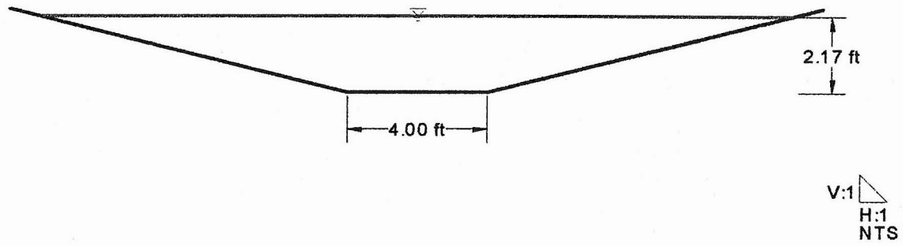

Reservation Channel (Dobbins to Laveen Conveyance Channel)
Worksheet for Trapezoidal Channel

Project Description	
Worksheet	Alt 4A - Reservation Channel (Dobbins Road to Laveen Co
Flow Element	Trapezoidal Channel
Method	Manning's Formula
Solve For	Channel Depth

Input Data		
Mannings Coeffic	0.013	
Slope	005800	ft/ft
Left Side Slope	5.00	H : V
Right Side Slope	5.00	H : V
Bottom Width	5.00	ft
Discharge	197.00	cfs

Results		
Depth	1.68	ft
Flow Area	22.4	ft²
Wetted Perim	22.09	ft
Top Width	21.75	ft
Critical Depth	2.05	ft
Critical Slope	0.002349	ft/ft
Velocity	8.79	ft/s
Velocity Head	1.20	ft
Specific Energ	2.88	ft
Froude Numb	1.53	
Flow Type	Supercritical	

Reservation Channel (Dobbins to Laveen Conveyance Channel)
Cross Section for Trapezoidal Channel

Project Description	
Worksheet	Alt 4A - Reservation Channel (Dobbins Road to Laveen Co
Flow Element	Trapezoidal Channel
Method	Manning's Formula
Solve For	Channel Depth

Section Data		
Mannings Coeffic	0.013	
Slope	005800	ft/ft
Depth	1.68	ft
Left Side Slope	5.00	H : V
Right Side Slope	5.00	H : V
Bottom Width	5.00	ft
Discharge	197.00	cfs

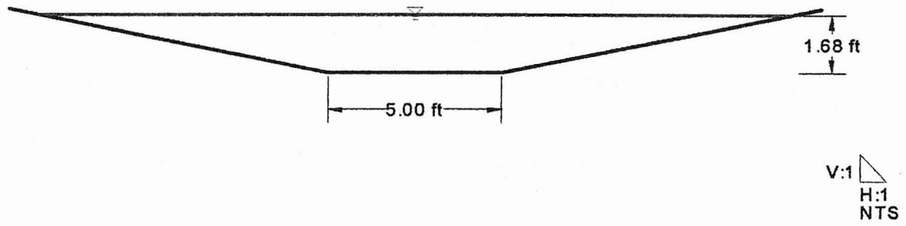

Reservation Channel (Elliot to Dobbins)
Worksheet for Trapezoidal Channel

Project Description	
Worksheet	Alt 4A - Reservation Channel (Elliot Road to Dot
Flow Element	Trapezoidal Channel
Method	Manning's Formula
Solve For	Channel Depth

Input Data		
Mannings Coeffic	0.013	
Slope	001000	ft/ft
Left Side Slope	5.00	H : V
Right Side Slope	5.00	H : V
Bottom Width	5.00	ft
Discharge	65.00	cfs

Results		
Depth	1.51	ft
Flow Area	18.9	ft²
Wetted Perim	20.38	ft
Top Width	20.08	ft
Critical Depth	1.19	ft
Critical Slope	0.002735	ft/ft
Velocity	3.44	ft/s
Velocity Head	0.18	ft
Specific Energ	1.69	ft
Froude Numb	0.62	
Flow Type	Subcritical	

© Haestad Methods, Inc.
Project Engineering Consultants Ltd
37 Brookside Road Waterbury, CT 06708 USA (203) 755-1666

Reservation Channel (Elliot to Dobbins)
Cross Section for Trapezoidal Channel

Project Description	
Worksheet	Alt 4A - Reservation Channel (Elliot Road to Dot
Flow Element	Trapezoidal Channel
Method	Manning's Formula
Solve For	Channel Depth

Section Data		
Mannings Coeffic	0.013	
Slope	001000	ft/ft
Depth	1.51	ft
Left Side Slope	5.00	H : V
Right Side Slope	5.00	H : V
Bottom Width	5.00	ft
Discharge	65.00	cfs

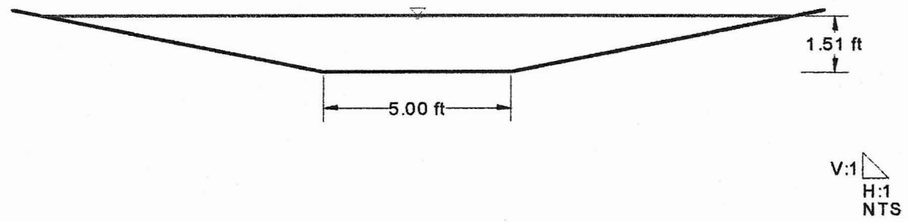

© Haestad Methods, Inc.
Project Engineering Consultants Ltd
37 Brookside Road Waterbury, CT 06708 USA (203) 755-1666

```
1*****************************************
 *                                       *
 *   FLOOD HYDROGRAPH PACKAGE  (HEC-1)   *
 *             JUN   1998                *
 *          VERSION 4.1                  *
 *                                       *
 *  RUN DATE   27JUN01  TIME  11:48:34   *
 *                                       *
 *****************************************
```

```
*****************************************
*                                       *
*    U.S. ARMY CORPS OF ENGINEERS       *
*    HYDROLOGIC ENGINEERING CENTER      *
*         609 SECOND STREET             *
*       DAVIS, CALIFORNIA 95616         *
*           (916) 756-1104              *
*                                       *
*****************************************
```

```
X     X  XXXXXXX   XXXXX          X
X     X  X        X     X        XX
X     X  X        X              X
XXXXXXX  XXXX     X        XXXXX  X
X     X  X        X              X
X     X  X        X     X        X
X     X  XXXXXXX   XXXXX         XXX
```

THIS PROGRAM REPLACES ALL PREVIOUS VERSIONS OF HEC-1 KNOWN AS HEC1 (JAN 73), HEC1GS, HEC1DB, AND HEC1KW.

THE DEFINITIONS OF VARIABLES -RTIMP- AND -RTIOR- HAVE CHANGED FROM THOSE USED WITH THE 1973-STYLE INPUT STRUCTURE.
THE DEFINITION OF -AMSKK- ON RM-CARD WAS CHANGED WITH REVISIONS DATED 28 SEP 81. THIS IS THE FORTRAN77 VERSION
NEW OPTIONS: DAMBREAK OUTFLOW SUBMERGENCE , SINGLE EVENT DAMAGE CALCULATION, DSS:WRITE STAGE FREQUENCY,
DSS:READ TIME SERIES AT DESIRED CALCULATION INTERVAL LOSS RATE:GREEN AND AMPT INFILTRATION
KINEMATIC WAVE: NEW FINITE DIFFERENCE ALGORITHM

1 HEC-1 INPUT PAGE 1

```
LINE          ID.....1.....2.....3.....4.....5.....6.....7.....8.....9.....10

   1          ID    FILENAME LAVALT4A.DAT
   2          ID    LAVEEN ADMP ALTERNATIVE MODEL FOR ALTERNATIVE 4
   3          ID    MAY 2001
   4          ID    MODIFIED BY PROJECT ENGINEERING CONSULTANTS, LTD.
   5          ID
   6          ID
   7          ID
   8          ID    LAVEEN ADMS (FINAL HEC-1) 100-YR 24-HR STORM          CBA FILE # 40916-02-30
   9          ID    HIDDEN VALLEY WATERSHED/CHAMPION DRAIN WATERSHED
  10          ID    INPUT FILE NAME  LAVFUT1A                    DATE: SEPT. 27,2000
  11          ID     24-HOUR SCS TYPE II
  12          ID    80% RETENTION VOLUME OF FUTURE RETENTION
  13          ID
  14          ID    RELAXED RETENTION 1/2 MILE OF MARICOPA DRAIN
  15          ID    MINUS FIRST FLUSH OF 5YR 24HR VOLUME
  16          ID
  17          ID    MULTIPLAN FOR ROUTING WITHIN THE CHAMPION DRAIN
  18          ID      PLAN 2: CHANNEL, S=.0020 ft/ft, n=.031, BW=14', SS=6:1, D=10', TW=124'
  19          ID
  20          ID    DDM MCUHP1 LAVEEN REVISED HYDROLOGY - FUTURE LANDUSE CONDITIONS
              *DIAGRAM
  21          IT       5                    300
  22          IO       3       0
              * DDM   ***** Updated *****

  23          KK   VR47C
  24          KM   SUB-BASIN VR47C
  25          KM   24-HOUR SCS TYPE II RAINFALL WAS USED TO FIND TC & R FOR THIS BASIN
  26          KM   THIS BASIN USED RAINFALL REDUCTION FACTOR OF  .934
  27          KM     L = 1.65  Kb = .042  Adj. Slope =    7.0
  28          BA    .869
  29          IN      15
  30          KM   RAINFALL DEPTH OF 4.20 WAS SPACIALLY REDUCED AS SHOWN BY THE PB RECORD
  31          PB   3.923
  32          KM   THE FOLLOWING PC RECORD USED A 24-HR SCS TYPE II STORM
  33          PC    .000    .002    .005    .008    .011    .014    .017    .020    .023    .026
  34          PC    .029    .032    .035    .038    .041    .044    .048    .052    .056    .060
  35          PC    .064    .068    .072    .076    .080    .085    .090    .095    .100    .105
  36          PC    .110    .115    .120    .126    .133    .140    .147    .155    .163    .172
  37          PC    .181    .191    .203    .218    .236    .257    .283    .387    .663    .707
  38          PC    .735    .758    .776    .791    .804    .815    .825    .834    .842    .849
  39          PC    .856    .863    .869    .875    .881    .887    .893    .898    .903    .908
  40          PC    .913    .918    .922    .926    .930    .934    .938    .942    .946    .950
  41          PC    .953    .956    .959    .962    .965    .968    .971    .974    .977    .980
  42          PC    .983    .986    .989    .992    .995    .998   1.000
  43          LG    .260    .250   5.700    .250  27.000
  44          UC   1.500    .938
  45          UA       0       5      16      30      65      77      84      90      94      97
  46          UA     100
              *
              * DDM   ***** Preserved *****
```

1 HEC-1 INPUT PAGE 2

```
LINE          ID.....1.....2.....3.....4.....5.....6.....7.....8.....9.....10

  47          KK   VR47R
  48          KM   DIVERT RETENTION VOLUME
```



```
  49          KM   RELAXED RETENTION VOLUME FROM 72.8 AC-FT
  50          DT  RET47C    67.7
  51          DI       0    1000   10000
  52          DQ       0    1000   10000
              *
              * DDM   ***** Preserved *****

  53          KK  RBR511
  54          KM   ROUTE FLOW FROM COMPUTATION POINT CVR47C TO COMPUTATION POINT CB51C
  55          KM   MARICOPA DRAIN - 47TH AVE. TO 51ST AVE.
  56          RS       2    ELEV      -1
  57          RC    .030    .030    .030    3200    .0011
  58          RX       0      10      20      45     115     140     150     160
  59          RY  1008.2  1008.1    1008    1003    1003    1008  1008.1  1008.2
              *
              * DDM   ***** Updated *****

  60          KK  AVR51C
  61          KM   SUB-BASIN AVR51C
  62          KM   24-HOUR SCS TYPE II RAINFALL WAS USED TO FIND TC & R FOR THIS BASIN
  63          KM   THIS BASIN USED RAINFALL REDUCTION FACTOR OF  .934
  64          KM     L =  .86  Kb = .049  Adj. Slope =   10.0
  65          BA    .285
  66          LG    .250    .190   6.600    .170  30.000
  67          UC    .829    .545
  68          UA       0       5      16      30      65      77      84      90      94      97
  69          UA     100
              *
              * DDM   ***** Preserved *****

  70          KK  AVR51R
  71          KM   DIVERT RETENTION VOLUME
  72          DT  RET51C    21.6
  73          DI       0    1000   10000
  74          DQ       0    1000   10000
              *
              * DDM   ***** Preserved *****

  75          KK  RBR512
  76          KM    ROUTE FLOW FROM SUB-BASIN AVR51C TO COMPUTATION POINT CB51C
  77          KM    ROUTING REVISED TO REFLECT AN URBANIZED CONDITION
  78          RS       4    ELEV      -1
  79          RC   0.035   0.035   0.035    3600   0.001  1010.5
  80          RX       0      20      40      46      56      62      82     102
  81          RY  1010.5  1009.7  1009.0    1006    1006    1009  1009.7  1010.5
              *
              * DDM   ***** Updated *****
```

1 HEC-1 INPUT PAGE 3

```
LINE          ID.....1.....2.....3.....4.....5.....6.....7.....8.....9.....10

  82          KK   BR51C
  83          KM   SUB-BASIN BR51C
  84          KM   24-HOUR SCS TYPE II RAINFALL WAS USED TO FIND TC & R FOR THIS BASIN
  85          KM   THIS BASIN USED RAINFALL REDUCTION FACTOR OF  .934
  86          KM     L = 1.21  Kb = .043  Adj. Slope =    6.0
  87          BA    .699
  88          LG    .250    .250   4.900    .350  31.000
  89          UC   1.325    .722
  90          UA       0       5      16      30      65      77      84      90      94      97
  91          UA     100
              *
              * DDM   ***** Preserved *****

  92          KK   BR51R
  93          KM   DIVERT RETENTION VOLUME
  94          KM   RELAXED RETENTION VOLUME FROM 53.6 AC-FT
  95          DT  RET159    50.5
  96          DI       0    1000   10000
  97          DQ       0    1000   10000
              *
              * DDM   ***** Preserved *****

  98          KK   CB51C
  99          KM    COMBINE ROUTED FLOW FROM COMPUTATION POINT CVR47C AND SUB-BASIN AVR51C
 100          KM    WITH RUNOFF FROM SUB-BASIN BR51C
 101          HC       3
              *
              *  ********************************************************************
              *  ******************MODIFICATION MADE FOR ALT 4A**********************
              *  ********************************************************************
              *
              *
              *
              *  ********************************************************************
              *
              *  FOR THE LAVEEN ADMP MODIFICATIONS WERE MADE TO CONVEY FLOWS TO THIS POINT
              *  THIS MODEL USES DETENTION BASINS AND STORM DRAINS TO ACOMPLISH THIS
              *
              *
              *
              * DDM   ***** Updated *****
```

```
                KK   DR43C
                KM   SUB-BASIN DR43C
                KM   24-HOUR SCS TYPE II RAINFALL WAS USED TO FIND TC & R FOR THIS BASIN
                KM   THIS BASIN USED RAINFALL REDUCTION FACTOR OF  .934
                KM     L = 1.49  Kb = .039  Adj. Slope =   69.0
                BA    .922
                LG    .250    .250   5.100    .300  38.000
                UC    .450    .220
                UA       0       5      16      30      65      77      84      90      94      97
                UA     100
                *
                * DDM   ***** Preserved *****
1                                       HEC-1 INPUT                                          PAGE  4

           LINE ID.......1.......2.......3.......4.......5.......6.......7.......8.......9......10

                KK   DR43R
                KM   DIVERT RETENTION VOLUME
                DT  RET43C    27.9
                DI       0    1000   10000
                DQ       0    1000   10000
                *
                *
                *  *********************PROPOSED BASIN IN SUB-BASIN DR43C**********************
                *
                KK  43BASN
                KM   *********************PROPOSED BASIN IN SUB-BASIN DR43C**********************
                KM   DETENTION BASIN AT THE DOBBINS AND 43TH AVE INTERSECTION.
                KM   THIS IS A BASIN ADDED FOR THE ADMP ALTERNATE 4A
                KM   THE BASIN HAS 10 AC TOP, 7.2 AC BOTTOM AND IS 10FT DEEP WITH 5:1 SIDE SLOPES
                KO       1
                RS       1    ELEV       0
                SA     7.2     7.8     8.3     8.9     9.4    10.0
                SQ       0      20      20      20      20      20
                SE       0       2       4       6       8      10
                *
                *
                * *****************DOBBINS ROAD STORM DRAIN**********************************
                * ***************ALT6 WILL PICK UP ALL FLOWS FROM DR43C**********************
                *
                *
                *
                *
                KK  ROA51A
                KM   **************DOBBINS ROAD STORM DRAIN*****************************
                KM   ROUTE FLOW FROM DR43C WEST (1ST REACH) ALONG DOBBINS TO 47TH AVENUE
                RK    2790   .0042    .013             CIRC       3
                * RS     2    ELEV      -1
                * RC  .035    .035    .035    2790   .0042
                * RX     0      40      60      74      99     113     133     153
                * RY  1025    1024    1023    1016    1016    1023    1024    1025
                *
                *
                *
                *  *********************DOBBINS ROAD STORM DRAIN*********************************
                *
                *
                KK  ROA51B
                KM   ****************DOBBINS ROAD STORM DRAIN*****************************
                KM   ROUTE FLOW ALONG DOBBINS FROM 47TH TO 51ST AVENUES
                KM   CROSS-SECTION REVISED TO REFLECT TO USE STORM DRAIN
                RK    2640  0.0033    .013             CIRC       3
                *
                *  RS     2    ELEV      -1
                *  RC  .035    .035    .035    3600   .0017
                *  RX     0      40      60      74      99     113     133     153
                *  RY  1013    1012    1011    1004    1004    1011    1012    1013
                *
                * DDM   ***** Updated *****
1                                       HEC-1 INPUT                                          PAGE  5

           LINE ID.......1.......2.......3.......4.......5.......6.......7.......8.......9......10

                KK   OA51B
                KM   SUB-BASIN OA51B
                KM   24-HOUR SCS TYPE II RAINFALL WAS USED TO FIND TC & R FOR THIS BASIN
                KM   THIS BASIN USED RAINFALL REDUCTION FACTOR OF  .934
                KM     L = 1.26  Kb = .036  Adj. Slope =  254.0
                BA    1.03
                LG    .270    .270   6.000    .200  30.000
                UC    .233    .074
                UA       0       5      16      30      65      77      84      90      94      97
                UA     100
                *
                * DDM   ***** Preserved *****

                KK   OA51R
                KM   DIVERT RETENTION VOLUME
                DT   RET51    80.9
                DI       0    1000   10000
                DQ       0    1000   10000
```



```
                *
                *
                *
                *  **************PROPOSED DETENTION BASIN IN SUB-BASIN OA51B******************
                *

                KK  DRBASN
                KM   **************PROPOSED DETENTION BASIN IN SUB-BASIN OA51B******************
                KM   DETENTION BASIN AT THE DOBBINS AND 51ST AVE INTERSECTION.
                KM   THIS BASIN WAS ADDED FOR THE ADMP ALTERNATE 4
                KM   BASIN HAS 10 AC TOP, 8.5 AC BOTTOM AND IS 5 FT DEEP WITH 5:1 SIDE SLOPES
                KO       1
                RS       1    ELEV       0
                SA     8.5     8.8     9.1     9.4     9.7      10
                SQ       0      20      20      20      20      20
                SE       0       2       4       6       5      10
                *
                *
                *
                *  *****************NEW SUB-BASIN SPLIT FROM OA51B*****************************
                *
                *

                KK   ER47B
                KM   SUB-BASIN ER47B
                KM   THIS SUB-BASIN SPLIT FROM OA51B TO ALLOW FOR DETENTION TO BE USED BELOW
                KM   THE WESTERN CANAL - ALT6A
                KM   24-HOUR SCS TYPE II RAINFALL WAS USED TO FIND TC & R FOR THIS BASIN
                KM   THIS BASIN USED RAINFALL REDUCTION FACTOR OF  .934
                KM     L = 1.26  Kb = .036  Adj. Slope =  254.0
                BA    0.34
                LG    .270    .270   6.000    .200  30.000
                UC    .233    .074
                UA       0       5      16      30      65      77      84      90      94      97
                UA     100
                *
                *
                *
                *  ***************PROPOSED BASIN BELOW ER47B*********************************
                *
                *
1                                       HEC-1 INPUT                                          PAGE  6

           LINE ID.......1.......2.......3.......4.......5.......6.......7.......8.......9......10

                KK  ERBASN
                KM   ***************PROPOSED BASIN BELOW ER47B*********************************
                KM   DETENTION BASIN AT THE ELLIOT AND 47TH AVE INTERSECTION. THE WESTERN CANAL
                KM   IS USED AS A COLLECTOR FACILITY AND OUTLETS TO THIS DETENTION BASIN. THE
                KM   BASIN HAS 10 AC TOP, 3.8 AC BOTTOM AND IS 6 FT DEEP WITH 5:1 SIDE SLOPES
                KO       1
                RS       1    ELEV       0
                SA     3.8     4.8     5.9     6.9     7.9     9.0      10
                SQ       0      20      20      20      20      20      20
                SE       0       1       2       3       4       5       6
                *
                *
                *
                *
                *  *****************51ST AVENUE STORM DRAIN**********************************
                *
                *
                *
                *

                KK  RER47B
                KM   *****************51ST AVENUE STORM DRAIN**********************************
                KM   ROUTE THE OUTFLOW FROM THE ELLIOT ROAD BASIN FROM ELLIOT ROAD TO DOBBINS ROAD
                RK    7920   .0034    .013             CIRC       3
                *

                KK   CDR51
                KM   COMBINE ROUTED FLOW FROM SUB-BASIN DR43C AND ER47B TO RUNOFF FROM SUB-BASIN
                KM   OA51B - THIS COMBINATION NOW AT DOBBINS ROAD AND 51ST AVE
                HC       3
                *
                *
                *  *******************51ST AVENUE STORM DRAIN**********************************
                *
                *

                KK  RDR51A
                KM   *********************51ST AVENUE STORM DRAIN*******************************
                KM   ROUTE FLOWS ALONG 51ST AVE TO A BASIN NEAR 51ST AND BASLINE
                KM   CROSS-SECTION REVISED TO REFLECT TO USE STORM DRAIN
                RK    1320  0.0053    .013             CIRC       5
                *
                * DDM   ***** Updated *****

                KK   SM51C
                KM   SUB-BASIN SM51C
                KM   24-HOUR SCS TYPE II RAINFALL WAS USED TO FIND TC & R FOR THIS BASIN
                KM   THIS BASIN USED RAINFALL REDUCTION FACTOR OF  .934
                KM     L = 1.29  Kb = .045  Adj. Slope =   12.0
                BA    .511
```

```
 202          LG    .290    .250   5.200    .290  17.000
 203          UC   1.054    .705
 204          UA       0       5      16      30      65      77      84      90      94      97
 205          UA     100
              *
              * DDM   ***** Preserved *****
1                                        HEC-1 INPUT                                                    PAGE  7

LINE          ID.......1.......2.......3.......4.......5.......6.......7.......8.......9......10

 206          KK   SM51R
 207          KM   DIVERT RETENTION VOLUME
 208          DT  RET51C    23.0
 209          DI       0    1000   10000
 210          DQ       0    1000   10000
              *
              *
              * DDM   ***** Preserved *****

 211          KK  RB2591
 212          KM   ROUTE FLOW FROM COMPUTATION POINT CS51C TO COMPUTATION POINT CB259C
 213          KM   FIRST REACH
 214          KM   CROSS-SECTION REVISED TO REFLECT DEVELOPED CONDITIONS
 215          RS       3    ELEV      -1
 216          RC   0.035   0.035   0.035    4200  0.0036
 217          RX       0      40      60      65      75      80     100     140
 218          RY    1030    1029    1028    1025    1025    1028    1029    1030
              *
              * RC  0.07    0.07    0.07    4200  0.0036
              * RX     0     612    1085    1155    1595    1670    1765    2130
              * RY1029.6    1029    1028  1027.5  1027.5    1028    1028  1029.6
              *
              *

 219          KK   C51SM
 220          KM   COMBINE SUBARAREA SM51C WITH 51ST AVE STORM DRAIN
 221          HC       2
              *
              *
              *  *********************51ST AVENUE STORM DRAIN**********************************
              *
              *

 222          KK  RDR51B
 223          KM   ***********PROPOSED 51ST AVENUE STORM DRAIN**********************************
 224          KM   ROUTE FLOWS ALONG 51ST AVE TO A BASIN NEAR 51ST AND BASLINE
 225          KM   CROSS-SECTION REVISED TO REFLECT TO USE STORM DRAIN
 226          RK    3960 0.0053    .013            CIRC       10
              *
              *
              *  ********PROPOSED BASIN IN SUB-BASIN BR51C SOUTHERN AND BASELINE**************
              *
              *

 227          KK  BRBASN
 228          KM   *****************PROPOSED DETENTION BASIN IN SUB-BASIN BR51C*****************
 229          KM   DETENTION BASIN AT THE BASELINE AND 51ST AVE INTERSECTION.
 230          KM
 231          KM   BASIN HAS 10 AC TOP, 7.7 AC BOTTOM AND IS 8 FT DEEP WITH 5:1 SIDE SLOPES
 232          RS       1    ELEV       0
 233          SA     7.7     8.0     8.3     8.6     8.9     9.2     9.5     9.8   10.00
 234          SQ       0      50      50      50      50      50      50      50      50
 235          SE       0       1       2       3       4       5       6       7       8
              *
              *
              *  ************BASLINE ROAD STORM DRAIN*****************************************
              *
              *

1                                        HEC-1 INPUT                                                    PAGE  8

LINE          ID.......1.......2.......3.......4.......5.......6.......7.......8.......9......10

 236          KK   DBR51
 237          KM   ************BASLINE ROAD STORM DRAIN*****************************************
 238          KM   ROUTE FLOWS WEST ALONG BASELINE TO THE LAVEEN CONVEYANCE CHANNEL
 239          KM   CROSS-SECTION REVISED TO REFLECT TO USE STORM DRAIN
 240          RK    2640   0.003    .013            CIRC        4
              *
              *

 241          KK   CB51D
 242          KM    COMBINE ROUTED FLOW FROM COMPUTATION POINT CB51C AND FLOWS FROM 51ST
 243          KM    AVENUE STORM DRAIN PROPOSED BY THE LAVEEN ADMP
 244          HC       2
              *
              *
              *
              * DDM   ***** Preserved *****

 245          KK  RB1591
 246          KM    ROUTE FLOW FROM COMPUTATION POINT CB51C TO COMPUTATION POINT CB159C
 247          KM    MARICOPA DRAIN FROM 51ST AVE TO 59TH AVE.
 248          RS       3    ELEV      -1
 249          RC    .030    .030    .030    5200   .0011
```



```
 250          RX       0      10      20      45     125     150     160     170
 251          RY  1000.2  1000.1    1000     995     995    1000  1000.1  1000.2
              *
              * DDM   ***** Updated *****

 252          KK  AVR55C
 253          KM   SUB-BASIN AVR55C
 254          KM   24-HOUR SCS TYPE II RAINFALL WAS USED TO FIND TC & R FOR THIS BASIN
 255          KM   THIS BASIN USED RAINFALL REDUCTION FACTOR OF  .934
 256          KM     L =  .93  Kb = .051  Adj. Slope =    5.0
 257          BA    .241
 258          LG    .250    .150   8.000    .100  29.000
 259          UC   1.212    .973
 260          UA       0       5      16      30      65      77      84      90      94      97
 261          UA     100
              *
              * DDM   ***** Preserved *****

 262          KK  AVR55R
 263          KM   DIVERT RETENTION VOLUME
 264          DT  RET55C    25.6
 265          DI       0    1000   10000
 266          DQ       0    1000   10000
              *
              * DDM   ***** Preserved *****

 267          KK  RB1592
 268          KM    ROUTE FLOW FROM SUBASIN AVR55C TO COMPUTATION POINT CB159C
 269          KM   ROUTING REVISED TO REFLECT URBANIZED CONDITIONS
 270          RS       3    ELEV      -1
 271          RC   0.035   0.035   0.035    3600   0.001
 272          RX       0      20      40      46      56      62      82     102
1                                        HEC-1 INPUT                                                    PAGE  9

LINE          ID.......1.......2.......3.......4.......5.......6.......7.......8.......9......10

 273          RY    1004    1003    1002     999     999    1002    1003    1004
              *
              * DDM   ***** Updated *****

 274          KK  BR159C
 275          KM   SUB-BASIN BR159C
 276          KM   24-HOUR SCS TYPE II RAINFALL WAS USED TO FIND TC & R FOR THIS BASIN
 277          KM   THIS BASIN USED RAINFALL REDUCTION FACTOR OF  .934
 278          KM     L = 1.68  Kb = .054  Adj. Slope =    8.0
 279          BA    .675
 280          LG    .170    .250   4.800    .420  28.000
 281          UC   1.500   1.100
 282          UA       0       5      16      30      65      77      84      90      94      97
 283          UA     100
              *
              * DDM   ***** Preserved *****

 284          KK  BR159R
 285          KM   DIVERT RETENTION VOLUME
 286          KM   RELAXED RETENTION VOLUME FROM 43.2 AC-FT
 287          DT  RET159    39.5
 288          DI       0    1000   10000
 289          DQ       0    1000   10000
              *
              * DDM   ***** Updated *****

 290          KK   VR59C
 291          KM   SUB-BASIN VR59C
 292          KM   24-HOUR SCS TYPE II RAINFALL WAS USED TO FIND TC & R FOR THIS BASIN
 293          KM   THIS BASIN USED RAINFALL REDUCTION FACTOR OF  .934
 294          KM     L =  .75  Kb = .083  Adj. Slope =    4.0
 295          BA    .233
 296          LG    .130    .150   7.000    .180   9.000
 297          UC   1.500   1.058
 298          UA       0       5      16      30      65      77      84      90      94      97
 299          UA     100
              *
              * DDM   ***** Preserved *****

 300          KK  RB1593
 301          KM   ROUTE FLOW FROM SUB-BASIN VR59C TO COMPUTATION POINT CB159C
 302          KM   ROUTING REVISED TO REFLECT URBANIZED CONDITIONS
 303          RS       3    ELEV      -1
 304          RC   0.035   0.035   0.035    3000  0.0015
 305          RX       0      20      40      46      56      62      82     102
 306          RY    1002  1001.3    1001     998     998    1001  1001.3    1002
              *
              * DDM   ***** Preserved *****

 307          KK  CB159N
 308          KM     COMBINE ROUTED FLOWS FROM COMPUTATION POINT CB51C AND SUB-BASINS AVR51C
 309          KM     AND VR59C WITH RUNOFF FROM SUB-BASIN BR159C
 310          KM     CP (NORTH FLOWS) AT 59TH AVE AND BASELINE RD.
 311          HC       4
              *
              *
              * ************************FREEWAY CHANNEL SYSTEM*********************************
              *
              *  (SHOULD BEGIN WITH IR62B BUT DISTRICT HYDROLOGY DID NOT INCLUDE)
```

```
                *
                * DDM   ***** Updated *****
1                                       HEC-1 INPUT                                                 PAGE 10

        LINE    ID.....1.....2.....3.....4.....5.....6.....7.....8.....9.....10

         312    KK   ER55B
         313    KM   SUB-BASIN ER55B
         314    KM   24-HOUR SCS TYPE II RAINFALL WAS USED TO FIND TC & R FOR THIS BASIN
         315    KM   THIS BASIN USED RAINFALL REDUCTION FACTOR OF  .934
         316    KM     L =  .79  Kb = .050  Adj. Slope =    8.0
         317    BA    .256
         318    LG    .260    .260   6.000    .210  27.000
         319    UC    .908    .599
         320    UA       0       5      16      30      65      77      84      90      94      97
         321    UA     100
                *
                * DDM   ***** Preserved *****

         322    KK   ER55R
         323    KM   DIVERT RETENTION VOLUME
         324    DT   RET55    19.2
         325    DI       0    1000   10000
         326    DQ       0    1000   10000
                *
                *
                * DDM   ***** Preserved *****

         327    KK   RE59B
         328    KM   ROUTE FLOWS FROM CONCENTRATION POINT CRE55B TO CP CER59B
         329    KM   ROUTING REVISED TO REFLECT URBANIZED CONDITIONS
         330    RS       2    ELEV      -1
         331    RC    .035    .035    .035    2600    .002
         332    RX       0      30      50      55      65      70      90     120
         333    RY    1026    1024    1023    1020    1020    1023    1024    1026
                *
                * DDM   ***** Updated *****

         334    KK   ER59B
         335    KM   SUB-BASIN ER59B
         336    KM   24-HOUR SCS TYPE II RAINFALL WAS USED TO FIND TC & R FOR THIS BASIN
         337    KM   THIS BASIN USED RAINFALL REDUCTION FACTOR OF  .934
         338    KM     L =  .95  Kb = .030  Adj. Slope =    8.0
         339    BA    .259
         340    LG    .130    .250   5.000    .370  71.000
         341    UC    .671    .492
         342    UA       0       5      16      30      65      77      84      90      94      97
         343    UA     100
                *
                * DDM   ***** Preserved *****

         344    KK   ER59R
         345    KM   DIVERT RETENTION VOLUME
         346    DT   RET59    23.2
         347    DI       0    1000   10000
         348    DQ       0    1000   10000
                *
                * DDM   ***** Preserved *****
1                                       HEC-1 INPUT                                                 PAGE 11

        LINE    ID.....1.....2.....3.....4.....5.....6.....7.....8.....9.....10

         349    KK  CER59B
         350    KM   COMBINE ROUTED FLOW FROM CP CRE55B TO RUNOFF FROM SUBBASIN ER59B
         351    HC       2
                *
                *
                *  ***********************FREEWAY CHANNEL**********************************
                *
                * DDM   ***** Preserved *****

         352    KK   RCERB
         353    KM   ******FREEWAY CHANNEL(CONC. LINED) - 4' DEEP, 4' BOTTOM, 4:1 SIDE SLOPES*****
         354    KM   ROUTE FLOW FROM COMPUTATION POINT CPCER59B COMPUTAION CDR57C
         355    KM   CROSS-SECTION REVISED TO REFLECT URBANIZED CONDITIONS
         356    RS       2    ELEV      -1
         357    RC  0.035   0.035   0.035    2920   0.001
         358    RX       0      40      60      76      80      96     129     149
         359    RY    1029    1029    1029    1025    1025    1029    1029    1029
                *
                *
                * DDM   ***** Updated *****

         360    KK   OA55C
         361    KM   SUB-BASIN OA55C
         362    KM   24-HOUR SCS TYPE II RAINFALL WAS USED TO FIND TC & R FOR THIS BASIN
         363    KM   THIS BASIN USED RAINFALL REDUCTION FACTOR OF  .934
         364    KM     L =  .96  Kb = .049  Adj. Slope =    3.0
         365    BA    .246
         366    LG    .290    .250   4.800    .360  19.000
         367    UC   1.500   1.249
         368    UA       0       5      16      30      65      77      84      90      94      97
         369    UA     100
                *
```



```
                * DDM   ***** Preserved *****

         370    KK   OA55R
         371    KM   DIVERT RETENTION VOLUME
         372    DT  RET55C     2.4
         373    DI       0    1000   10000
         374    DQ       0    1000   10000
                *
                *
                * DDM   ***** Preserved *****

         375    KK   RD57C
         376    KM   ROUTE FLOW FROM COMPUTATION POINT CPO55C TO COMPUTAION CDR57C
         377    KM   CROSS-SECTION REVISED TO REFLECT URBANIZED CONDITIONS
         378    RS       2    ELEV      -1
         379    RC  0.035   0.035   0.035    2920   0.001
         380    RX       0      40      60      72      97     109     129     149
         381    RY    1030    1029    1028    1022    1022    1028    1029    1030
                *
                *
                * DDM   ***** Updated *****
1                                       HEC-1 INPUT                                                 PAGE 12

        LINE    ID.....1.....2.....3.....4.....5.....6.....7.....8.....9.....10

         382    KK   DR57C
         383    KM   SUB-BASIN DR57C
         384    KM   24-HOUR SCS TYPE II RAINFALL WAS USED TO FIND TC & R FOR THIS BASIN
         385    KM   THIS BASIN USED RAINFALL REDUCTION FACTOR OF  .934
         386    KM     L =  .71  Kb = .054  Adj. Slope =    3.0
         387    BA    .118
         388    LG    .300    .250   4.800    .360  15.000
         389    UC   1.500   1.492
         390    UA       0       5      16      30      65      77      84      90      94      97
         391    UA     100
                *
                * DDM   ***** Preserved *****

         392    KK   DR57R
         393    KM   DIVERT RETENTION VOLUME
         394    DT   RET27    12.8
         395    DI       0    1000   10000
         396    DQ       0    1000   10000
                *
                * DDM   ***** Preserved *****

         397    KK  CDR57C
         398    KM   COMBINE ROUTED FLOW FROM COMPUTATION POINT CPO55C TO RUNOFF FROM SUB-BASIN
         399    KM   DR57C
         400    HC       2
                *
                * DDM   ***** Preserved *****

         401    KK   RD59C
         402    KM   ROUTE FLOW FROM COMPUTATION POINT CDR57C TO COMPUTATION POINT CDR59C
         403    KM   CROSS-SECTION REVISED TO REFLECT URBANIZED CONDITIONS
         404    RS       1    ELEV      -1
         405    RC  0.035   0.035   0.035    1200  0.0025
         406    RX       0      40      60      72      97     109     129     149
         407    RY    1026    1025    1024    1019    1019    1024    1025    1026
                *
                * DDM   ***** Updated *****

         408    KK   DR59C
         409    KM   SUB-BASIN DR59C
         410    KM   24-HOUR SCS TYPE II RAINFALL WAS USED TO FIND TC & R FOR THIS BASIN
         411    KM   THIS BASIN USED RAINFALL REDUCTION FACTOR OF  .934
         412    KM     L =  .69  Kb = .048  Adj. Slope =    7.0
         413    BA    .117
         414    LG    .230    .250   4.800    .370  37.000
         415    UC   1.554   1.524
         416    UA       0       5      16      30      65      77      84      90      94      97
         417    UA     100
                *
                * DDM   ***** Preserved *****
1                                       HEC-1 INPUT                                                 PAGE 13

        LINE    ID.....1.....2.....3.....4.....5.....6.....7.....8.....9.....10

         418    KK   DR59R
         419    KM   DIVERT RETENTION VOLUME
         420    DT  RET59C    10.4
         421    DI       0    1000   10000
         422    DQ       0    1000   10000
                *
                * DDM   ***** Preserved *****

         423    KK  CDR59C
         424    KM   COMBINE ROUTED FLOW FROM COMPUTATION POINT CDR57C TO RUNOFF FROM SUB-BASIN
         425    KM   DR59C
         426    HC       3
                *
                *
                *
```

```
                * ********************FREEWAY CHANNEL*****************************************
                *
                *
                * DDM   ***** Preserved *****

     427        KK   RB259
     428        KM   *****FREEWAY CHANNEL(CONC LINED)4' DEEP, 4' BOTTOM, 4:1 SIDE SLOPES*******
     429        KM   ROUTE FLOW FROM COMPUTATION POINT CDR59C TO COMPUTATION POINT CB259C
     430        KM   CROSS-SECTION REVISED TO REFLECT URBANIZED CONDITIONS
     431        KM   REVISED SLOPW FROM .0046 TO REFLECT A VELOCITY OF LESS THAN 4 FT/SEC
     432        KM
     433        RS       2    ELEV      -1
     434        RC   0.035    0.02   0.035    5280  0.0015
     435        RX       0      40      60      76      80      96     129     149
     436        RY    1029    1029    1029    1025    1025    1029    1029    1029
                *
                *
                * DDM   ***** Updated *****

     437        KK  BR259C
     438        KM   SUB-BASIN BR259C
     439        KM   24-HOUR SCS TYPE II RAINFALL WAS USED TO FIND TC & R FOR THIS BASIN
     440        KM   THIS BASIN USED RAINFALL REDUCTION FACTOR OF  .934
     441        KM     L = 1.90  Kb = .037  Adj. Slope =   19.0
     442        BA   1.012
     443        LG    .230    .250   4.800    .360  33.000
     444        UC    .954    .583
     445        UA       0       5      16      30      65      77      84      90      94      97
     446        UA     100
                *
                * DDM   ***** Preserved *****

     447        KK  BR259R
     448        KM   DIVERT RETENTION VOLUME
     449        KM   RELAXED RETENTION VOLUME FROM 68.3 AC-FT.
     450        DT  RET259    67.0
     451        DI       0    1000   10000
     452        DQ       0    1000   10000
                *
                *
                *
                * DDM   ***** Preserved *****
1                                        HEC-1 INPUT                                    PAGE 14

   LINE         ID.......1.......2.......3.......4.......5.......6.......7.......8.......9......10

     453        KK  CB259S
     454        KM   COMBINE FLOWS FROM THE SOUTH AT 59TH AVENUE
     455        HC       2
                *
                * DDM   ***** Preserved *****

     456        KK   CB259
     457        KM   COMBINE NORTH AND SOUTH FLOWS
     458        HC       2
                *
                * DDM   ***** Preserved *****

     459        KK  RBR163
     460        KM   ROUTE FLOW FROM COMPUTATION POINT CB1591 TO COMPUTATION POINT CB163C
     461        KM   MARICOPA DRAIN FROM 59TH AVE. TO 63RD AVE.
     462        KM   ADJUST THE SLOPE FROM .0011 TO REFLECT A VELOCITY OF LESS THAN 5 FT/SEC
     463        RS       2    ELEV      -1
     464        RC    .030    .030    .030    2640   .0009
     465        RX       0      10      20      45     135     160     170     180
     466        RY   997.8   997.7   997.6   992.6   992.6   997.6   997.7   997.8
                *
                * DDM   ***** Updated *****

     467        KK  BR263C
     468        KM   SUB-BASIN BR263C
     469        KM   24-HOUR SCS TYPE II RAINFALL WAS USED TO FIND TC & R FOR THIS BASIN
     470        KM   THIS BASIN USED RAINFALL REDUCTION FACTOR OF  .934
     471        KM     L = 1.45  Kb = .057  Adj. Slope =   19.0
     472        BA    .494
     473        LG    .110    .250   4.700    .480  38.000
     474        UC   1.104    .831
     475        UA       0       5      16      30      65      77      84      90      94      97
     476        UA     100
                *
                * DDM   ***** Preserved *****

     477        KK  BR263R
     478        KM   DIVERT RETENTION VOLUME
     479        KM   RELAXED RETENTION VOLUME FROM 32.0 AC-FT.
     480        DT  RET263    29.3
     481        DI       0    1000   10000
     482        DQ       0    1000   10000
                *
                * DDM   ***** Preserved *****

     483        KK     63S
     484        KM   COMBINE ROUTED FLOW FROM COMPUTATION POINT CB159C WITH RUNOFF FROM SUB-BASINS
     485        KM   BR163C AND BR263C AND ROUTED FLOW FROM COMPUTATION POINT  CB259C
     486        HC       2
```



```
                *
                * DDM   ***** Updated *****
1                                        HEC-1 INPUT                                    PAGE 15

   LINE         ID.......1.......2.......3.......4.......5.......6.......7.......8.......9......10

     487        KK  BR163C
     488        KM   SUB-BASIN BR163C
     489        KM   24-HOUR SCS TYPE II RAINFALL WAS USED TO FIND TC & R FOR THIS BASIN
     490        KM   THIS BASIN USED RAINFALL REDUCTION FACTOR OF  .934
     491        KM     L =  .91  Kb = .040  Adj. Slope =    9.0
     492        BA    .255
     493        LG    .220    .250   5.400    .240  21.000
     494        UC    .808    .590
     495        UA       0       5      16      30      65      77      84      90      94      97
     496        UA     100
                *
                * DDM   ***** Preserved *****

     497        KK  BR163R
     498        KM   DIVERT RETENTION VOLUME
     499        DT  RET163     6.6
     500        DI       0    1000   10000
     501        DQ       0    1000   10000
                *
                * DDM   ***** Preserved *****

     502        KK   CB163
     503        KM   COMBINE FLOWS ON THE SOUTH SIDE OF BASELINE
     504        HC       2
                *
                * DDM   ***** Preserved *****

     505        KK   RCD1C
     506        KM   ROUTE FLOW FROM COMPUTATION POINT CB163C TO COMPUTATION POINT CPCD1C
     507        KM   MARICOPA DRAIN FROM 63RD AVE TO 67TH AVE.
     508        RS       2    ELEV      -1
     509        RC    .030    .030    .030    2640   .0011
     510        RX       0      10      20      45     135     160     170     180
     511        RY   996.2   996.1     996     991     991     996   996.1   996.2
                *
                * DDM   ***** Updated *****

     512        KK   BR67C
     513        KM   SUB-BASIN BR67C
     514        KM   24-HOUR SCS TYPE II RAINFALL WAS USED TO FIND TC & R FOR THIS BASIN
     515        KM   THIS BASIN USED RAINFALL REDUCTION FACTOR OF  .934
     516        KM     L =  .79  Kb = .054  Adj. Slope =    5.0
     517        BA    .127
     518        LG    .300    .150   7.000    .140  15.000
     519        UC   1.163   1.174
     520        UA       0       5      16      30      65      77      84      90      94      97
     521        UA     100
                *
                * DDM   ***** Preserved *****
1                                        HEC-1 INPUT                                    PAGE 16

   LINE         ID.......1.......2.......3.......4.......5.......6.......7.......8.......9......10

     522        KK  RCD1C2
     523        KM   ROUTE FLOW FROM SUBASIN BR67C TO COMPUTATION POINT CPCD1C
     524        KM   CROSS-SECTION WAS REVISED TO REFLECT URBANIZED CONDITIONS
     525        RS       1    ELEV      -1
     526        RC   0.035   0.035   0.035    2100  0.0014
     527        RX       0      40      60      65      75      80     100     140
     528        RY     994     993     992     989     989     992     993     994
                *
                * DDM   ***** Updated *****

     529        KK    CD1C
     530        KM   SUB-BASIN CD1C
     531        KM   24-HOUR SCS TYPE II RAINFALL WAS USED TO FIND TC & R FOR THIS BASIN
     532        KM   THIS BASIN USED RAINFALL REDUCTION FACTOR OF  .934
     533        KM     L =  .90  Kb = .049  Adj. Slope =   27.0
     534        BA    .464
     535        LG    .190    .250   4.700    .410  30.000
     536        UC    .583    .290
     537        UA       0       5      16      30      65      77      84      90      94      97
     538        UA     100
                *
                * DDM   ***** Preserved *****

     539        KK    CD1R
     540        KM   DIVERT RETENTION VOLUME
     541        DT   RET1C    32.0
     542        DI       0    1000   10000
     543        DQ       0    1000   10000
                *
                * DDM   ***** Preserved *****

     544        KK  CPCD1C
     545        KM    COMBINE ROUTED FLOWS FROM COMPUTATION POINT CB163C AND SUB-BASIN BR67C
     546        KM    WITH RUNOFF FROM SUB-BASIN CD1C
     547        HC       3
```

```
                *
                * DDM   ***** Preserved *****

      548       KK  RCD2C1
      549       KM    ROUTE FLOW FROM COMPUTATION POINT CPCD1C TO COMPUTATION POINT CIRSMC
      550       KM    MARIOCPA DRAIN FROM 67TH AVE TO 75TH AVE.
      551       KM    ADJUST SLOPE FROM .0011 TO REFLECT A VELOCITY OF LESS THAN 5 FT/SEC
      552       RS       3    ELEV      -1
      553       RC    .030    .030    .030    3600   .0007
      554       RX       0      10      20      45     155     180     190     200
      555       RY   990.2   990.1     990     985     985     990   990.1   990.2
                *
                *
                * DDM   ***** Updated *****
1                                          HEC-1 INPUT                                          PAGE 17

     LINE       ID.......1.......2.......3.......4.......5.......6.......7.......8.......9......10

      556       KK   IR63B
      557       KM   SUB-BASIN IR63B
      558       KM   24-HOUR SCS TYPE II RAINFALL WAS USED TO FIND TC & R FOR THIS BASIN
      559       KM   THIS BASIN USED RAINFALL REDUCTION FACTOR OF  .934
      560       KM     L =  .82  Kb = .034  Adj. Slope =   11.0
      561       BA    .124
      562       LG    .130    .250   4.800    .400  71.000
      563       UC    .575    .561
      564       UA       0       5      16      30      65      77      84      90      94      97
      565       UA     100
                *
                * DDM   ***** Preserved *****

      566       KK    IR63
      567       KM   DIVERT RETENTION VOLUME
      568       DT   RET63    11.2
      569       DI       0    1000   10000
      570       DQ       0    1000   10000
                *
                *
                * DDM   ***** Preserved *****

      571       KK  RIR65C
      572       KM    ROUTE RETRIEVED FLOW FROM SUB-BASIN IR63B TO COMPUTATION POINT CIR65C
      573       KM   CROSS-SECTION REVISED TO REFLECT URBANIZED CONDITIONS
      574       RS       7    ELEV      -1
      575       RC   0.030   0.030   0.030    3300  0.0010
      576       RX       0       1      11      21      26      31      41      46
      577       RY       6       5       4       1       1       4       5       6
                *
                * DDM   ***** Updated *****

      578       KK   IR65C
      579       KM   SUB-BASIN IR65C
      580       KM   24-HOUR SCS TYPE II RAINFALL WAS USED TO FIND TC & R FOR THIS BASIN
      581       KM   THIS BASIN USED RAINFALL REDUCTION FACTOR OF  .934
      582       KM     L =  .84  Kb = .052  Adj. Slope =   13.0
      583       BA    .170
      584       LG    .280    .250   4.800    .360  21.000
      585       UC    .829    .718
      586       UA       0       5      16      30      65      77      84      90      94      97
      587       UA     100
                *
                * DDM   ***** Preserved *****

      588       KK   IR65R
      589       KM   DIVERT RETENTION VOLUME
      590       DT   RET65C    14.4
      591       DI       0    1000   10000
      592       DQ       0    1000   10000
                *
                * DDM   ***** Preserved *****
1                                          HEC-1 INPUT                                          PAGE 18

     LINE       ID.......1.......2.......3.......4.......5.......6.......7.......8.......9......10

      593       KK  CIR65C
      594       KM   COMBINE RETRIEVED ROUTED FLOW FROM SUB-BASIN IR63B TO RUNOFF FROM SUB-BASIN
      595       KM   IR65C
      596       HC       2
                *
                * DDM   ***** Preserved *****

      597       KK   RIRDC
      598       KM   ROUTE FLOW FROM COMPUTATION POINT CIR65C TO COMPUTATION POINT CIRDC
      599       KM   CROSS-SECTION REVISED TO REFLECT URBANIZED CONDITIONS
      600       RS       2    ELEV      -1
      601       RC    0.03    0.03    0.03    3200  0.0018
      602       RX       0       1      10      20      30      40      50      51
      603       RY  1014.5    1014    1013    1010    1010    1013    1014  1014.5
                *
                * DDM   ***** Preserved *****

      604       KK  DIIRDC
      605       KM    ROUTED FLOW FROM COMPUTATION POINT CIR65C IS SPLIT AT COMPUTATION POINT
      606       KM    CIRDC
```



```
      607       DT  RIR65C
      608       DI       0      16      34      51      71      80     100     120     150
      609       DQ       0      16      25      32      40      49      69      89     119
                *
                * DDM   ***** Updated *****

      610       KK    IRDC
      611       KM   SUB-BASIN IRDC
      612       KM   24-HOUR SCS TYPE II RAINFALL WAS USED TO FIND TC & R FOR THIS BASIN
      613       KM   THIS BASIN USED RAINFALL REDUCTION FACTOR OF  .934
      614       KM     L = 1.47  Kb = .038  Adj. Slope =   12.0
      615       BA    .525
      616       LG    .190    .250   4.800    .370  51.000
      617       UC    .958    .694
      618       UA       0       5      16      30      65      77      84      90      94      97
      619       UA     100
                *
                * DDM   ***** Preserved *****

      620       KK    IRDR
      621       KM   DIVERT RETENTION VOLUME
      622       DT   RETRDC    43.2
      623       DI       0    1000   10000
      624       DQ       0    1000   10000
                *
                * DDM   ***** Preserved *****

      625       KK   CIRDC
      626       KM    COMBINE ROUTED FLOW FROM COMPUTATION POINT CIR65C TO RUNOFF FROM SUB-BASIN
      627       KM    IRDC
      628       HC       2
                *
                * DDM   ***** Preserved *****
1                                          HEC-1 INPUT                                          PAGE 19

     LINE       ID.......1.......2.......3.......4.......5.......6.......7.......8.......9......10

      629       KK  RIRSMC
      630       KM    ROUTE FLOW COMPUTATION POINT CIRDC TO COMPUTATION POINT CIRSMC
      631       KM   CROSS-SECTION REVISED TO REFLECT URBANIZED CONDITIONS
      632       RS       3    ELEV      -1
      633       RC   0.035   0.035   0.035    3400  0.0058
      634       RX       0      40      60      70      80      90     110     150
      635       RY    1006    1005    1004     999     999    1004    1005    1006
                *
                * DDM   ***** Updated *****

      636       KK   IRSMC
      637       KM   SUB-BASIN IRSMC
      638       KM   24-HOUR SCS TYPE II RAINFALL WAS USED TO FIND TC & R FOR THIS BASIN
      639       KM   THIS BASIN USED RAINFALL REDUCTION FACTOR OF  .934
      640       KM     L =  .88  Kb = .043  Adj. Slope =   32.0
      641       BA    .241
      642       LG    .210    .250   4.500    .430  34.000
      643       UC    .479    .332
      644       UA       0       5      16      30      65      77      84      90      94      97
      645       UA     100
                *
                * DDM   ***** Preserved *****

      646       KK   IRSMR
      647       KM   DIVERT RETENTION VOLUME
      648       KM   RELAXED RETENTION VOLUME FROM 20.0 AC-FT
      649       DT  RETSMC    19.1
      650       DI       0    1000   10000
      651       DQ       0    1000   10000
                *
                * DDM   ***** Preserved *****

      652       KK  CIRSMS
      653       KM
      654       HC       2
                *
                * DDM   ***** Preserved *****

      655       KK  CIRSMC
      656       KM   COMBINE FLOWS IN MARICOPA DRAIN JUST WEST OF 75TH AVE
      657       HC       2
                *
                * DDM   ***** Updated *****

      658       KK    CD2C
      659       KM   SUB-BASIN CD2C
      660       KM   24-HOUR SCS TYPE II RAINFALL WAS USED TO FIND TC & R FOR THIS BASIN
      661       KM   THIS BASIN USED RAINFALL REDUCTION FACTOR OF  .934
      662       KM     L = 1.57  Kb = .043  Adj. Slope =    4.0
      663       BA    .598
      664       LG    .240    .150   8.400    .090  31.000
      665       UC   1.500   1.116
      666       UA       0       5      16      30      65      77      84      90      94      97
      667       UA     100
                *
                * DDM   ***** Preserved *****
1                                          HEC-1 INPUT                                          PAGE 20
```

```
LINE      ID.....1.....2.....3.....4.....5.....6.....7.....8.....9.....10

  668     KK    CD2R
  669     KM   DIVERT RETENTION VOLUME
  670     KM   RELAXED RETENTION VOLUME FROM 44.8 AC-FT.
  671     DT   RET2C    39.7
  672     DI       0    1000   10000
  673     DQ       0    1000   10000
          *
          *
          * DDM   ***** Preserved *****

  674     KK   CCD2C
  675     KM   COMBINE FLOW FROM CD2C AND MARIOCPA DRAIN
  676     KM   MARICOPA DRAIN AT 1000 FT EAST OF 75TH AVE AND SOUTH MOUNTAIN AVE. (1/2 MILE
  677     KM   BETWEEN DOBBINS AND BASELINE ROADS.)
  678     HC       2
          *
          * DDM   ***** Preserved *****

  679     KK  RCD3C1
  680     KM    MARICOPA DRAIN FROM JUST EAST OF 75TH AVE ALONG POWERLINE RD (INDIAN
  681     KM    RESERVATION BOUNDARY).
  682     KM    ADJUST SLOPE FROM .0011 TO REFLECT A VELOCITY OF LESS THAN 5 FT/SEC
  683     RS       2     ELEV      -1
  684     RC    .030    .030    .030    3700   .0007
  685     RX       0      10      20      45     165     190     200     210
  686     RY   986.2   986.1     986     981     981     986   986.1   986.2
          *
          * DDM   ***** Updated *****

  687     KK   A67AC
  688     KM   SUB-BASIN A67AC
  689     KM   24-HOUR SCS TYPE II RAINFALL WAS USED TO FIND TC & R FOR THIS BASIN
  690     KM   THIS BASIN USED RAINFALL REDUCTION FACTOR OF  .934
  691     KM     L = 1.65  Kb = .042  Adj. Slope =    7.0
  692     BA    .618
  693     LG    .250    .250   5.100    .320  34.000
  694     UC   1.500   1.140
  695     UA       0       5      16      30      65      77      84      90      94      97
  696     UA     100
          *
          * DDM   ***** Preserved *****

  697     KK   A67AR
  698     KM   DIVERT RETENTION VOLUME
  699     DT  RET67A    38.4
  700     DI       0    1000   10000
  701     DQ       0    1000   10000
          *
          * DDM   ***** Preserved *****
1                                    HEC-1 INPUT                                    PAGE 21

LINE      ID.....1.....2.....3.....4.....5.....6.....7.....8.....9.....10

  702     KK  RCD4C1
  703     KM   ROUTE FLOW FROM SUB-BASIN 67AC CPCD4C TO COMPUTATION POINT CPCD4C
  704     KM   CROSS-SECTION REVISED TO REFLECT URBANIZED CONDITIONS
  705     RS       2     ELEV      -1
  706     RC   0.035   0.035   0.035    2600  0.0024
  707     RX       0      40      50      55      60      65      70     110
  708     RY     988     987     986     983     983     986     987     988
          *
          * DDM   ***** Updated *****

  709     KK    CD4C
  710     KM   SUB-BASIN CD4C
  711     KM   24-HOUR SCS TYPE II RAINFALL WAS USED TO FIND TC & R FOR THIS BASIN
  712     KM   THIS BASIN USED RAINFALL REDUCTION FACTOR OF  .934
  713     KM     L =  .64  Kb = .051  Adj. Slope =    9.0
  714     BA    .190
  715     LG    .250    .250   4.900    .350  29.000
  716     UC    .771    .500
  717     UA       0       5      16      30      65      77      84      90      94      97
  718     UA     100
          *
          * DDM   ***** Preserved *****

  719     KK    CD4R
  720     KM   DIVERT RETENTION VOLUME
  721     DT  RETD4C    13.6
  722     DI       0    1000   10000
  723     DQ       0    1000   10000
          *
          * DDM   ***** Preserved *****

  724     KK  CPCD4C
  725     KM    COMBINE ROUTED FLOW FROM SUB-BASIN 67AC TO RUNOFF FROM SUB-BASIN CD4C
  726     HC       2
          *
          * DDM   ***** Preserved *****

  727     KK  RCD3C2
  728     KM   ROUTE FLOW FROM COMPUTATION POINT CPCD4C TO COMPUTATION POINT CPCD3C
```



```
  729     KM   CROSS-SECTION REVISED TO REFLECT URBANIZED CONDITIONS
  730     RS       3     ELEV      -1
  731     RC   0.035   0.035   0.035    5200  0.0024
  732     RX       0      40      50      55      60      65      70     110
  733     RY     988     987     986     983     983     986     987     988
          *
          * DDM   ***** Updated *****

  734     KK    CD3C
  735     KM   SUB-BASIN CD3C
  736     KM   24-HOUR SCS TYPE II RAINFALL WAS USED TO FIND TC & R FOR THIS BASIN
  737     KM   THIS BASIN USED RAINFALL REDUCTION FACTOR OF  .934
  738     KM     L = 1.15  Kb = .044  Adj. Slope =   10.0
  739     BA    .480
  740     LG    .240    .150   7.000    .140  33.000
1                                    HEC-1 INPUT                                    PAGE 22

LINE      ID.....1.....2.....3.....4.....5.....6.....7.....8.....9.....10

  741     UC    .929    .579
  742     UA       0       5      16      30      65      77      84      90      94      97
  743     UA     100
          *
          * DDM   ***** Preserved *****

  744     KK    CD3R
  745     KM   DIVERT RETENTION VOLUME
  746     KM   RELAXED RETENTION VOLUME FROM 35.2 AC-FT.
  747     DT  RETD3C    32.6
  748     DI       0    1000   10000
  749     DQ       0    1000   10000
          *
          * DDM   ***** Preserved *****

  750     KK  CPCD3C
  751     KM   COMBINE ROUTED FLOW FROM COMPUTATION POINT CPCD4C, ROUTED FLOW FROM DIVERSION
  752     KM   POINT AT BASELINE ROAD WITH RUNOFF FROM SUB-BASIN CD3C
  753     HC       3
  754     ZZ
```

```
1
                SCHEMATIC DIAGRAM OF STREAM NETWORK
 INPUT
  LINE      (V) ROUTING          (--->) DIVERSION OR PUMP FLOW
   NO.      (.) CONNECTOR        (<---) RETURN OF DIVERTED OR PUMPED FLOW

    23       VR47C
             .
             .
    50       .-------->  RET47C
    47       VR47R
             V
             V
    53      RBR511
             .
             .
    60       .      AVR51C
             .        .
             .        .
    72       .        .-------->  RET51C
    70       .      AVR51R
             .        V
             .        V
    75       .      RBR512
             .        .
             .        .
    82       .        .      BR51C
             .        .        .
             .        .        .
    95       .        .        .-------->  RET159
    92       .        .      BR51R
             .        .        .
             .        .        .
    98       .      CB51C.....................
             .
             .
   102       .       DR43C
             .         .
             .         .
   114       .         .------->  RET43C
   112       .       DR43R
             .         V
             .         V
   117       .      43BASN
             .         V
             .         V
   127       .      ROA51A
             .         V
             .         V
   131       .      ROA51B
             .         .
             .         .
   136       .         .      OA51B
             .         .        .
             .         .        .
   148       .         .        .-------->   RET51
   146       .         .      OA51R
             .         .        V
             .         .        V
   151       .         .      DRBASN
             .         .        .
             .         .        .
   161       .         .        .      ER47B
             .         .        .        V
             .         .        .        V
   173       .         .        .      ERBASN
             .         .        .        V
             .         .        .        V
   183       .         .        .      RER47B
             .         .        .        .
             .         .        .        .
   187       .       CDR51.....................
             .         V
             .         V
   191       .      RDR51A
             .         .
             .         .
   196       .         .      SM51C
             .         .        .
             .         .        .
   208       .         .        .------->  RET51C
   206       .         .      SM51R
             .         .        V
             .         .        V
   211       .         .      RB2591
             .         .        .
             .         .        .
   219       .       C51SM.....
             .         V
             .         V
   222       .      RDR51B
             .         V
             .         V
   227       .      BRBASN
             .         V
```



```
             .         V
   236       .       DBR51
             .         .
             .         .
   241       .     CB51D.....
             .       V
             .       V
   245       .    RB1591
             .       .
             .       .
   252       .       AVR55C
             .         .
             .         .
   264       .         .-------->  RET55C
   262       .       AVR55R
             .         V
             .         V
   267       .       RB1592
             .         .
             .         .
   274       .         .      BR159C
             .         .        .
             .         .        .
   287       .         .        .-------->  RET159
   284       .         .      BR159R
             .         .        .
             .         .        .
   290       .         .        .      VR59C
             .         .        .        V
             .         .        .        V
   300       .         .        .      RB1593
             .         .        .        .
             .         .        .        .
   307       .     CB159N.....................................
             .
             .
   312       .       ER55B
             .         .
             .         .
   324       .         .------->   RET55
   322       .       ER55R
             .         V
             .         V
   327       .       RE59B
             .         .
             .         .
   334       .         .      ER59B
             .         .        .
             .         .        .
   346       .         .        .------->   RET59
   344       .         .      ER59R
             .         .        .
             .         .        .
   349       .       CER59B.....
             .         V
             .         V
   352       .       RCERB
             .         .
             .         .
   360       .         .      OA55C
             .         .        .
             .         .        .
   372       .         .        .------->  RET55C
   370       .         .      OA55R
             .         .        V
             .         .        V
   375       .         .      RD57C
             .         .        .
             .         .        .
   382       .         .        .      DR57C
             .         .        .        .
             .         .        .        .
   394       .         .        .        .------->   RET27
   392       .         .        .      DR57R
             .         .        .        .
             .         .        .        .
   397       .         .      CDR57C.....
             .         .        V
             .         .        V
   401       .         .      RD59C
             .         .        .
             .         .        .
   408       .         .        .      DR59C
             .         .        .        .
             .         .        .        .
   420       .         .        .        .------->  RET59C
   418       .         .        .      DR59R
             .         .        .        .
             .         .        .        .
   423       .       CDR59C.....................
             .         V
             .         V
   427       .       RB259
             .         .
             .         .
   437       .         .      BR259C
```

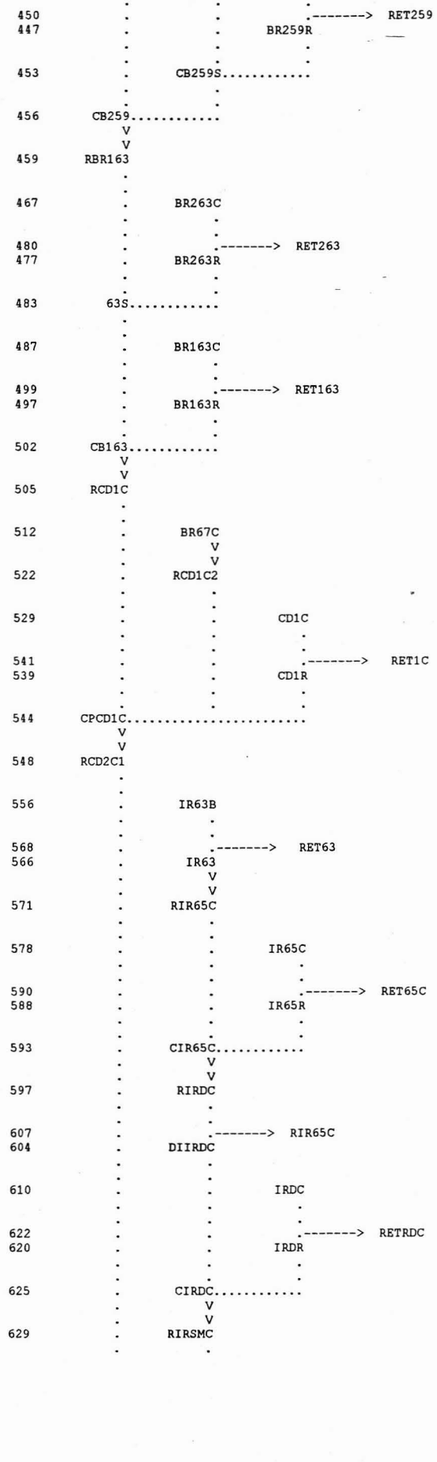

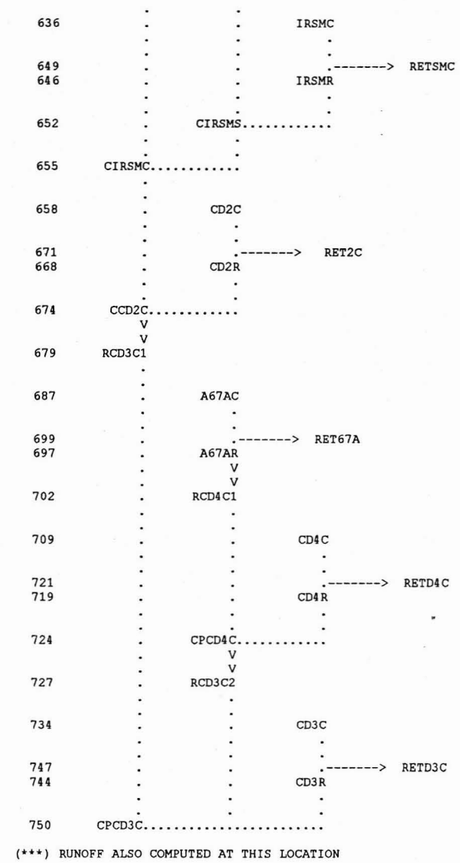

(***) RUNOFF ALSO COMPUTED AT THIS LOCATION

```
1*****************************************                  ***************************************
*                                       *                  *                                     *
*   FLOOD HYDROGRAPH PACKAGE  (HEC-1)   *                  *  U.S. ARMY CORPS OF ENGINEERS       *
*              JUN   1998               *                  *  HYDROLOGIC ENGINEERING CENTER      *
*           VERSION 4.1                 *                  *        609 SECOND STREET            *
*                                       *                  *     DAVIS, CALIFORNIA 95616         *
* RUN DATE   27JUN01  TIME  11:48:34    *                  *         (916) 756-1104              *
*                                       *                  *                                     *
*****************************************                  ***************************************


                        FILENAME LAVALT4A.DAT
                        LAVEEN ADMP ALTERNATIVE MODEL FOR ALTERNATIVE 4
                        MAY 2001
                        MODIFIED BY PROJECT ENGINEERING CONSULTANTS, LTD.


                        LAVEEN ADMS (FINAL HEC-1) 100-YR 24-HR STORM          CBA FILE # 40916-02-30
                        HIDDEN VALLEY WATERSHED/CHAMPION DRAIN WATERSHED
                        INPUT FILE NAME  LAVFUT1A                        DATE: SEPT. 27,2000
                        24-HOUR SCS TYPE II
                       80% RETENTION VOLUME OF FUTURE RETENTION

                       RELAXED RETENTION 1/2 MILE OF MARICOPA DRAIN
                       MINUS FIRST FLUSH OF 5YR 24HR VOLUME

                       MULTIPLAN FOR ROUTING WITHIN THE CHAMPION DRAIN
                         PLAN 2: CHANNEL, S=.0020 ft/ft, n=.031, BW=14', SS=6:1, D=10', TW=124'

                       DDM MCUHP1 LAVEEN REVISED HYDROLOGY - FUTURE LANDUSE CONDITIONS

  22 IO          OUTPUT CONTROL VARIABLES
                       IPRNT          3  PRINT CONTROL
                       IPLOT          0  PLOT CONTROL
                       QSCAL         0.  HYDROGRAPH PLOT SCALE

     IT          HYDROGRAPH TIME DATA
                        NMIN          5  MINUTES IN COMPUTATION INTERVAL
                       IDATE     1    0  STARTING DATE
                       ITIME       0000  STARTING TIME
                          NQ        300  NUMBER OF HYDROGRAPH ORDINATES
                      NDDATE     2    0  ENDING DATE
                      NDTIME       0055  ENDING TIME
                       ICENT         19  CENTURY MARK

                 COMPUTATION INTERVAL      .08 HOURS
                      TOTAL TIME BASE    24.92 HOURS

           ENGLISH UNITS
                DRAINAGE AREA           SQUARE MILES
                PRECIPITATION DEPTH     INCHES
                LENGTH, ELEVATION       FEET
                FLOW                    CUBIC FEET PER SECOND
                STORAGE VOLUME          ACRE-FEET
                SURFACE AREA            ACRES
                TEMPERATURE             DEGREES FAHRENHEIT

*** *** *** *** *** *** *** *** *** *** *** *** *** *** *** *** *** *** *** *** *** *** *** *** *** *** *** *** *** *** *** *** *** ***


              **************
              *            *
  23 KK       *   VR47C    *
              *            *
              **************
                       SUB-BASIN VR47C
                       24-HOUR SCS TYPE II RAINFALL WAS USED TO FIND TC & R FOR THIS BASIN
                       THIS BASIN USED RAINFALL REDUCTION FACTOR OF  .934
                         L = 1.65  Kb = .042  Adj. Slope =      7.0
                       RAINFALL DEPTH OF 4.20 WAS SPACIALLY REDUCED AS SHOWN BY THE PB RECORD
                       THE FOLLOWING PC RECORD USED A 24-HR SCS TYPE II STORM

  29 IN          TIME DATA FOR INPUT TIME SERIES
                      JXMIN          15  TIME INTERVAL IN MINUTES
                     JXDATE     1     0  STARTING DATE
                     JXTIME           0  STARTING TIME

            SUBBASIN RUNOFF DATA

  28 BA          SUBBASIN CHARACTERISTICS
                      TAREA         .87  SUBBASIN AREA

                 PRECIPITATION DATA

  32 PB                STORM        3.92  BASIN TOTAL PRECIPITATION

  32 PI            INCREMENTAL PRECIPITATION PATTERN
                      .00       .00       .00       .00       .00       .00       .00       .00       .00       .00
                      .00       .00       .00       .00       .00       .00       .00       .00       .00       .00
                      .00       .00       .00       .00       .00       .00       .00       .00       .00       .00
```



```
                      .00       .00       .00       .00       .00       .00       .00       .00       .00       .00
                      .00       .00       .00       .00       .00       .00       .00       .00       .00       .00
                      .00       .00       .00       .00       .00       .00       .00       .00       .00       .00
                      .00       .00       .00       .00       .00       .00       .00       .00       .00       .00
                      .00       .00       .00       .00       .00       .00       .00       .00       .00       .00
                      .00       .00       .00       .00       .00       .00       .00       .00       .00       .00
                      .00       .00       .00       .00       .00       .00       .00       .00       .00       .00
                      .00       .00       .00       .00       .00       .00       .00       .00       .00       .00
                      .00       .00       .00       .00       .00       .00       .00       .00       .00       .00
                      .00       .00       .00       .00       .00       .00       .00       .01       .00       .01
                      .01       .01       .01       .01       .01       .01       .01       .01       .03       .03
                      .03       .09       .09       .09       .01       .01       .01       .01       .01       .01
                      .01       .01       .01       .01       .01       .01       .00       .00       .00       .00
                      .00       .00       .00       .00       .00       .00       .00       .00       .00       .00
                      .00       .00       .00       .00       .00       .00       .00       .00       .00       .00
                      .00       .00       .00       .00       .00       .00       .00       .00       .00       .00
                      .00       .00       .00       .00       .00       .00       .00       .00       .00       .00
                      .00       .00       .00       .00       .00       .00       .00       .00       .00       .00
                      .00       .00       .00       .00       .00       .00       .00       .00       .00       .00
                      .00       .00       .00       .00       .00       .00       .00       .00       .00       .00
                      .00       .00       .00       .00       .00       .00       .00       .00       .00       .00
                      .00       .00       .00       .00       .00       .00       .00       .00       .00       .00
                      .00       .00       .00       .00       .00       .00       .00       .00       .00       .00
                      .00       .00       .00       .00       .00       .00       .00       .00       .00       .00
                      .00       .00       .00       .00       .00       .00       .00       .00       .00       .00
                      .00       .00       .00       .00       .00       .00       .00       .00

  43 LG          GREEN AND AMPT LOSS RATE
                      STRTL         .26  STARTING LOSS
                        DTH         .25  MOISTURE DEFICIT
                       PSIF        5.70  WETTING FRONT SUCTION
                      XKSAT         .25  HYDRAULIC CONDUCTIVITY
                      RTIMP       27.00  PERCENT IMPERVIOUS AREA

  44 UC          CLARK UNITGRAPH
                         TC        1.50  TIME OF CONCENTRATION
                          R         .94  STORAGE COEFFICIENT

  45 UA          ACCUMULATED-AREA VS. TIME,  11 ORDINATES
                       .0       5.0      16.0      30.0      65.0      77.0      84.0      90.0      94.0      97.0
                    100.0

                                                   ***

                                          UNIT HYDROGRAPH PARAMETERS
                                     CLARK   TC=  1.50 HR,       R=   .94 HR
                                    SNYDER   TP=   .78 HR,      CP=   .46

                                               UNIT HYDROGRAPH
                                          68 END-OF-PERIOD ORDINATES
                 8.       25.       50.       83.      118.      172.      255.      316.      334.      336.
               329.      322.      312.      300.      287.      272.      259.      246.      230.      210.
               193.      176.      161.      148.      135.      123.      113.      103.       95.       87.
                79.       72.       66.       61.       55.       51.       46.       42.       39.       36.
                33.       30.       27.       25.       23.       21.       19.       17.       16.       15.
                13.       12.       11.       10.        9.        9.        8.        7.        7.        6.
                 5.        5.        5.        4.        4.        4.        3.        3.

     ***               ***               ***               ***               ***

                           HYDROGRAPH AT STATION     VR47C

      TOTAL RAINFALL =      3.92, TOTAL LOSS =      1.97, TOTAL EXCESS =      1.95

    PEAK FLOW     TIME                         MAXIMUM AVERAGE FLOW
                                      6-HR        24-HR        72-HR      24.92-HR
 +   (CFS)        (HR)
                              (CFS)
 +     460.      12.67                 152.         45.          44.         44.
                           (INCHES)   1.622       1.935        1.936       1.936
                            (AC-FT)     75.         90.          90.         90.

                              CUMULATIVE AREA =      .87 SQ MI

*** *** *** *** *** *** *** *** *** *** *** *** *** *** *** *** *** *** *** *** *** *** *** *** *** *** *** *** *** *** *** *** *** ***


              **************
              *            *
  47 KK       *   VR47R    *
              *            *
              **************

                                DIVERT RETENTION VOLUME
                                RELAXED RETENTION VOLUME FROM 72.8 AC-FT

     DT          DIVERSION
                      ISTAD      RET47C  DIVERSION HYDROGRAPH IDENTIFICATION
                     DSTRMX       67.70  MAXIMUM VOLUME TO BE DIVERTED

     DI               INFLOW        .00   1000.00  10000.00

     DQ        DIVERTED FLOW        .00   1000.00  10000.00
```

***

*** *** *** *** ***

DIVERSION HYDROGRAPH RET47C

PEAK FLOW	TIME		MAXIMUM AVERAGE FLOW			
			6-HR	24-HR	72-HR	24.92-HR
+ (CFS)	(HR)					
		(CFS)				
+ 460.	12.67		127.	34.	33.	33.
		(INCHES)	1.360	1.461	1.461	1.461
		(AC-FT)	63.	68.	68.	68.

CUMULATIVE AREA = .87 SQ MI

*** *** *** *** ***

HYDROGRAPH AT STATION VR47R

PEAK FLOW	TIME		MAXIMUM AVERAGE FLOW			
			6-HR	24-HR	72-HR	24.92-HR
+ (CFS)	(HR)					
		(CFS)				
+ 157.	14.25		38.	11.	11.	11.
		(INCHES)	.410	.475	.475	.475
		(AC-FT)	19.	22.	22.	22.

CUMULATIVE AREA = .87 SQ MI

*** ***

```
              **************
              *            *
 53 KK        *   RBR511   *
              *            *
              **************
```

ROUTE FLOW FROM COMPUTATION POINT CVR47C TO COMPUTATION POINT CB51C
MARICOPA DRAIN - 47TH AVE. TO 51ST AVE.

HYDROGRAPH ROUTING DATA

56 RS STORAGE ROUTING
- NSTPS 2 NUMBER OF SUBREACHES
- ITYP ELEV TYPE OF INITIAL CONDITION
- RSVRIC -1.00 INITIAL CONDITION
- X .00 WORKING R AND D COEFFICIENT

57 RC NORMAL DEPTH CHANNEL
- ANL .030 LEFT OVERBANK N-VALUE
- ANCH .030 MAIN CHANNEL N-VALUE
- ANR .030 RIGHT OVERBANK N-VALUE
- RLNTH 3200. REACH LENGTH
- SEL .0011 ENERGY SLOPE
- ELMAX .0 MAX. ELEV. FOR STORAGE/OUTFLOW CALCULATION

CROSS-SECTION DATA

--- LEFT OVERBANK --- + ------ MAIN CHANNEL ------- + --- RIGHT OVERBANK ---

59 RY	ELEVATION	1008.20	1008.10	1008.00	1003.00	1003.00	1008.00	1008.10	1008.20
58 RX	DISTANCE	.00	10.00	20.00	45.00	115.00	140.00	150.00	160.00

***

COMPUTED STORAGE-OUTFLOW-ELEVATION DATA

STORAGE	.00	1.43	2.92	4.47	6.07	7.72	9.43	11.20	13.02	14.89
OUTFLOW	.00	13.39	42.78	84.66	137.73	201.26	274.81	358.09	450.92	553.18
ELEVATION	1003.00	1003.27	1003.55	1003.82	1004.09	1004.37	1004.64	1004.92	1005.19	1005.46
STORAGE	16.82	18.81	20.85	22.95	25.10	27.30	29.56	31.88	34.25	36.95
OUTFLOW	664.80	785.74	916.01	1055.61	1204.58	1362.96	1530.81	1708.20	1895.20	2115.33
ELEVATION	1005.74	1006.01	1006.28	1006.56	1006.83	1007.11	1007.38	1007.65	1007.93	1008.20

*** *** *** *** ***

HYDROGRAPH AT STATION RBR511

PEAK FLOW	TIME		MAXIMUM AVERAGE FLOW			
			6-HR	24-HR	72-HR	24.92-HR
+ (CFS)	(HR)					
		(CFS)				
+ 97.	14.92		36.	11.	10.	10.
		(INCHES)	.388	.460	.460	.460
		(AC-FT)	18.	21.	21.	21.

PEAK STORAGE	TIME	MAXIMUM AVERAGE STORAGE			
		6-HR	24-HR	72-HR	24.92-HR
+ (AC-FT)	(HR)				
2.	14.92	1.	0.	0.	0.

PEAK STAGE	TIME	MAXIMUM AVERAGE STAGE			
		6-HR	24-HR	72-HR	24.92-HR
+ (FEET)	(HR)				
1003.89	14.92	1003.46	1003.15	1003.14	1003.14

CUMULATIVE AREA = .87 SQ MI

*** ***

```
              **************
              *            *
 60 KK        *   AVR51C   *
              *            *
              **************
```

SUB-BASIN AVR51C
24-HOUR SCS TYPE II RAINFALL WAS USED TO FIND TC & R FOR THIS BASIN
THIS BASIN USED RAINFALL REDUCTION FACTOR OF .934
L = .86 Kb = .049 Adj. Slope = 10.0

SUBBASIN RUNOFF DATA

65 BA SUBBASIN CHARACTERISTICS
- TAREA .28 SUBBASIN AREA

PRECIPITATION DATA

32 PB STORM 3.92 BASIN TOTAL PRECIPITATION

32 PI INCREMENTAL PRECIPITATION PATTERN

.00	.00	.00	.00	.00	.00	.00	.00	.00	.00
.00	.00	.00	.00	.00	.00	.00	.00	.00	.00
.00	.00	.00	.00	.00	.00	.00	.00	.00	.00
.00	.00	.00	.00	.00	.00	.00	.00	.00	.00
.00	.00	.00	.00	.00	.00	.00	.00	.00	.00
.00	.00	.00	.00	.00	.00	.00	.00	.00	.00
.00	.00	.00	.00	.00	.00	.00	.00	.00	.00
.00	.00	.00	.00	.00	.00	.00	.00	.00	.00
.00	.00	.00	.00	.00	.00	.00	.00	.00	.00
.00	.00	.00	.00	.00	.00	.00	.00	.00	.00
.00	.00	.00	.00	.00	.00	.00	.00	.00	.00
.00	.00	.00	.00	.00	.00	.00	.00	.00	.00
.00	.00	.00	.00	.00	.00	.00	.01	.00	.01
.01	.01	.01	.01	.01	.01	.01	.01	.03	.03
.03	.09	.09	.09	.01	.01	.01	.01	.01	.01
.01	.01	.01	.01	.01	.01	.00	.00	.00	.00
.00	.00	.00	.00	.00	.00	.00	.00	.00	.00
.00	.00	.00	.00	.00	.00	.00	.00	.00	.00
.00	.00	.00	.00	.00	.00	.00	.00	.00	.00
.00	.00	.00	.00	.00	.00	.00	.00	.00	.00
.00	.00	.00	.00	.00	.00	.00	.00	.00	.00
.00	.00	.00	.00	.00	.00	.00	.00	.00	.00
.00	.00	.00	.00	.00	.00	.00	.00	.00	.00
.00	.00	.00	.00	.00	.00	.00	.00	.00	.00
.00	.00	.00	.00	.00	.00	.00	.00	.00	.00
.00	.00	.00	.00	.00	.00	.00	.00	.00	.00
.00	.00	.00	.00	.00	.00	.00	.00	.00	.00
.00	.00	.00	.00	.00	.00	.00	.00	.00	.00
.00	.00	.00	.00	.00	.00	.00	.00		

66 LG GREEN AND AMPT LOSS RATE
- STRTL .25 STARTING LOSS
- DTH .19 MOISTURE DEFICIT
- PSIF 6.60 WETTING FRONT SUCTION
- XKSAT .17 HYDRAULIC CONDUCTIVITY
- RTIMP 30.00 PERCENT IMPERVIOUS AREA

67 UC CLARK UNITGRAPH
- TC .83 TIME OF CONCENTRATION
- R .55 STORAGE COEFFICIENT

68 UA ACCUMULATED-AREA VS. TIME, 11 ORDINATES

.0	5.0	16.0	30.0	65.0	77.0	84.0	90.0	94.0	97.0
100.0									

***

UNIT HYDROGRAPH PARAMETERS
CLARK TC= .83 HR, R= .55 HR
SNYDER TP= .43 HR, CP= .45

UNIT HYDROGRAPH
39 END-OF-PERIOD ORDINATES

8.	32.	68.	135.	189.	192.	185.	174.	160.	147.
130.	112.	96.	82.	71.	61.	52.	45.	38.	33.
28.	24.	21.	18.	15.	13.	11.	10.	8.	7.
6.	5.	4.	4.	3.	3.	2.	2.	2.	

*** *** *** *** ***

HYDROGRAPH AT STATION AVR51C

TOTAL RAINFALL = 3.92, TOTAL LOSS = 1.76, TOTAL EXCESS = 2.16

```
 PEAK FLOW      TIME                              MAXIMUM AVERAGE FLOW
                                      6-HR         24-HR        72-HR       24.92-HR
+  (CFS)        (HR)
                             (CFS)
+     261.      12.33                    55.           16.          16.          16.
                           (INCHES)     1.806        2.145        2.147        2.147
                            (AC-FT)       27.           33.          33.          33.

                          CUMULATIVE AREA =      .28 SQ MI


*** *** *** *** *** *** *** *** *** *** *** *** *** *** *** *** *** *** *** *** *** *** *** *** *** *** *** *** *** *** *** *** *** ***

                 **************
                 *            *
  70 KK          *   AVR51R   *
                 *            *
                 **************
                                  DIVERT RETENTION VOLUME

    DT         DIVERSION
                    ISTAD      RET51C  DIVERSION HYDROGRAPH IDENTIFICATION
                   DSTRMX       21.60  MAXIMUM VOLUME TO BE DIVERTED

    DI              INFLOW        .00   1000.00  10000.00

    DQ     DIVERTED FLOW          .00   1000.00  10000.00
                                                                 ***

    ***           ***           ***           ***           ***

                                DIVERSION HYDROGRAPH    RET51C

 PEAK FLOW      TIME                              MAXIMUM AVERAGE FLOW
                                      6-HR         24-HR        72-HR       24.92-HR
+  (CFS)        (HR)
                             (CFS)
+     261.      12.33                    41.           11.          10.          10.
                           (INCHES)     1.323        1.421        1.421        1.421
                            (AC-FT)       20.           22.          22.          22.

                          CUMULATIVE AREA =      .28 SQ MI


    ***           ***           ***           ***           ***

                               HYDROGRAPH AT STATION    AVR51R

 PEAK FLOW      TIME                              MAXIMUM AVERAGE FLOW
                                      6-HR         24-HR        72-HR       24.92-HR
+  (CFS)        (HR)
                             (CFS)
+     133.      13.00                    19.            6.           5.           5.
                           (INCHES)      .636         .726         .726         .726
                            (AC-FT)       10.           11.          11.          11.

                          CUMULATIVE AREA =      .28 SQ MI


*** *** *** *** *** *** *** *** *** *** *** *** *** *** *** *** *** *** *** *** *** *** *** *** *** *** *** *** *** *** *** *** *** ***

                 **************
                 *            *
  75 KK          *   RBR512   *
                 *            *
                 **************
                                  ROUTE FLOW FROM SUB-BASIN AVR51C TO COMPUTATION POINT CB51C
                                  ROUTING REVISED TO REFLECT AN URBANIZED CONDITION

                       HYDROGRAPH ROUTING DATA

  78 RS                STORAGE ROUTING
                            NSTPS          4  NUMBER OF SUBREACHES
                             ITYP       ELEV  TYPE OF INITIAL CONDITION
                           RSVRIC      -1.00  INITIAL CONDITION
                                X        .00 WORKING R AND D COEFFICIENT

  79 RC                NORMAL DEPTH CHANNEL
                              ANL       .035  LEFT OVERBANK N-VALUE
                             ANCH       .035  MAIN CHANNEL N-VALUE
                              ANR       .035  RIGHT OVERBANK N-VALUE
                            RLNTH      3600.  REACH LENGTH
                              SEL      .0010  ENERGY SLOPE
                            ELMAX     1010.5  MAX. ELEV. FOR STORAGE/OUTFLOW CALCULATION

                                           CROSS-SECTION DATA
                             --- LEFT OVERBANK --- + ------ MAIN CHANNEL ------- + --- RIGHT OVERBANK ---
  81 RY           ELEVATION   1010.50   1009.70   1009.00   1006.00   1006.00   1009.00   1009.70   1010.50
```



```
  80 RX           DISTANCE        .00     20.00     40.00     46.00     56.00     62.00     82.00    102.00
                                                        ***

                                          COMPUTED STORAGE-OUTFLOW-ELEVATION DATA

             STORAGE        .00       .20       .43       .67       .93      1.21      1.51      1.82      2.16      2.51
             OUTFLOW        .00      1.23      3.96      7.91     12.98     19.15     26.42     34.80     44.31     54.96
           ELEVATION    1006.00   1006.24   1006.47   1006.71   1006.95   1007.18   1007.42   1007.66   1007.89   1008.13

             STORAGE       2.88      3.27      3.68      4.12      4.78      5.69      6.87      8.29      9.93     11.81
             OUTFLOW      66.78     79.81     94.06    110.64    131.71    156.85    187.39    224.29    268.14    319.68
           ELEVATION    1008.37   1008.60   1008.84   1009.08   1009.32   1009.55   1009.79   1010.03   1010.26   1010.50

    ***           ***           ***           ***           ***

                               HYDROGRAPH AT STATION    RBR512

 PEAK FLOW      TIME                              MAXIMUM AVERAGE FLOW
                                      6-HR         24-HR        72-HR       24.92-HR
+  (CFS)        (HR)
                             (CFS)
+      82.      13.58                    19.            5.           5.           5.
                           (INCHES)      .614         .710         .710         .710
                            (AC-FT)        9.           11.          11.          11.

PEAK STORAGE    TIME                            MAXIMUM AVERAGE STORAGE
                                      6-HR         24-HR        72-HR       24.92-HR
+ (AC-FT)       (HR)
       1.       13.58                     0.            0.           0.           0.

 PEAK STAGE     TIME                             MAXIMUM AVERAGE STAGE
                                      6-HR         24-HR        72-HR       24.92-HR
+  (FEET)       (HR)
   1008.64      13.58                 1007.01      1006.35      1006.33      1006.33

                          CUMULATIVE AREA =      .28 SQ MI


*** *** *** *** *** *** *** *** *** *** *** *** *** *** *** *** *** *** *** *** *** *** *** *** *** *** *** *** *** *** *** *** *** ***

                 **************
                 *            *
  82 KK          *   BR51C    *
                 *            *
                 **************
                                 SUB-BASIN BR51C
                                 24-HOUR SCS TYPE II RAINFALL WAS USED TO FIND TC & R FOR THIS BASIN
                                 THIS BASIN USED RAINFALL REDUCTION FACTOR OF  .934
                                   L = 1.21  Kb = .043  Adj. Slope =     6.0

                       SUBBASIN RUNOFF DATA

  87 BA                SUBBASIN CHARACTERISTICS
                            TAREA         .70  SUBBASIN AREA

                       PRECIPITATION DATA

  32 PB                     STORM        3.92  BASIN TOTAL PRECIPITATION

  32 PI                  INCREMENTAL PRECIPITATION PATTERN
                            .00       .00       .00       .00       .00       .00       .00       .00       .00       .00
                            .00       .00       .00       .00       .00       .00       .00       .00       .00       .00
                            .00       .00       .00       .00       .00       .00       .00       .00       .00       .00
                            .00       .00       .00       .00       .00       .00       .00       .00       .00       .00
                            .00       .00       .00       .00       .00       .00       .00       .00       .00       .00
                            .00       .00       .00       .00       .00       .00       .00       .00       .00       .00
                            .00       .00       .00       .00       .00       .00       .00       .00       .00       .00
                            .00       .00       .00       .00       .00       .00       .00       .00       .00       .00
                            .00       .00       .00       .00       .00       .00       .00       .00       .00       .00
                            .00       .00       .00       .00       .00       .00       .00       .00       .00       .00
                            .00       .00       .00       .00       .00       .00       .00       .00       .00       .00
                            .00       .00       .00       .00       .00       .00       .00       .00       .00       .00
                            .00       .00       .00       .00       .00       .00       .00       .01       .00       .01
                            .01       .01       .01       .01       .01       .01       .01       .01       .03       .03
                            .03       .09       .09       .09       .01       .01       .01       .01       .01       .01
                            .01       .01       .01       .01       .01       .01       .00       .00       .00       .00
                            .00       .00       .00       .00       .00       .00       .00       .00       .00       .00
                            .00       .00       .00       .00       .00       .00       .00       .00       .00       .00
                            .00       .00       .00       .00       .00       .00       .00       .00       .00       .00
                            .00       .00       .00       .00       .00       .00       .00       .00       .00       .00
                            .00       .00       .00       .00       .00       .00       .00       .00       .00       .00
                            .00       .00       .00       .00       .00       .00       .00       .00       .00       .00
                            .00       .00       .00       .00       .00       .00       .00       .00       .00       .00
                            .00       .00       .00       .00       .00       .00       .00       .00       .00       .00
                            .00       .00       .00       .00       .00       .00       .00       .00       .00       .00
                            .00       .00       .00       .00       .00       .00       .00       .00       .00       .00
                            .00       .00       .00       .00       .00       .00       .00       .00       .00       .00
                            .00       .00       .00       .00       .00       .00       .00       .00       .00       .00
                            .00       .00       .00       .00       .00       .00       .00       .00

  88 LG                GREEN AND AMPT LOSS RATE
```

```
              STRTL        .25  STARTING LOSS
                DTH        .25  MOISTURE DEFICIT
               PSIF       4.90  WETTING FRONT SUCTION
              XKSAT        .35  HYDRAULIC CONDUCTIVITY
              RTIMP      31.00  PERCENT IMPERVIOUS AREA

 89 UC      CLARK UNITGRAPH
                 TC       1.33  TIME OF CONCENTRATION
                  R        .72  STORAGE COEFFICIENT

 90 UA      ACCUMULATED-AREA VS. TIME,  11 ORDINATES
                 .0      5.0     16.0     30.0     65.0     77.0     84.0     90.0     94.0     97.0
              100.0

                                           ***

                               UNIT HYDROGRAPH PARAMETERS
                          CLARK   TC=  1.33 HR,        R=   .72 HR
                          SNYDER  TP=   .67 HR,       CP=   .49

                                     UNIT HYDROGRAPH
                               53 END-OF-PERIOD ORDINATES
        9.      31.      62.     101.     150.     234.     311.     336.     334.     323.
      311.     296.     279.     261.     243.     228.     208.     185.     165.     147.
      131.     117.     104.      93.      82.      73.      65.      58.      52.      46.
       41.      37.      33.      29.      26.      23.      21.      18.      16.      15.
       13.      12.      10.       9.       8.       7.       6.       6.       5.       5.
        4.       4.       3.

   ***         ***         ***         ***         ***

                   HYDROGRAPH AT STATION    BR51C

   TOTAL RAINFALL =    3.92, TOTAL LOSS =    1.94, TOTAL EXCESS =    1.99

  PEAK FLOW     TIME                        MAXIMUM AVERAGE FLOW
                                   6-HR        24-HR       72-HR    24.92-HR
+   (CFS)       (HR)
                           (CFS)
+    432.      12.58                122.          37.         36.         36.
                        (INCHES)   1.618        1.969       1.970       1.970
                         (AC-FT)     60.          73.         73.         73.

                   CUMULATIVE AREA =     .70 SQ MI

*** *** *** *** *** *** *** *** *** *** *** *** *** *** *** *** *** *** *** *** *** *** *** *** *** *** *** *** *** *** *** *** *** ***

           **************
           *            *
 92 KK     *   BR51R    *
           *            *
           **************
                   DIVERT RETENTION VOLUME
                   RELAXED RETENTION VOLUME FROM 53.6 AC-FT

 DT         DIVERSION
                  ISTAD     RET159  DIVERSION HYDROGRAPH IDENTIFICATION
                 DSTRMX      50.50  MAXIMUM VOLUME TO BE DIVERTED

 DI              INFLOW        .00   1000.00  10000.00

 DQ       DIVERTED FLOW        .00   1000.00  10000.00

                                           ***

   ***         ***         ***         ***         ***

                   DIVERSION HYDROGRAPH    RET159

  PEAK FLOW     TIME                        MAXIMUM AVERAGE FLOW
                                   6-HR        24-HR       72-HR    24.92-HR
+   (CFS)       (HR)
                           (CFS)
+    432.      12.58                 94.          25.         25.         25.
                        (INCHES)   1.248        1.355       1.355       1.355
                         (AC-FT)     47.          50.         50.         50.

                   CUMULATIVE AREA =     .70 SQ MI

   ***         ***         ***         ***         ***

                   HYDROGRAPH AT STATION    BR51R

  PEAK FLOW     TIME                        MAXIMUM AVERAGE FLOW
                                   6-HR        24-HR       72-HR    24.92-HR
+   (CFS)       (HR)
                           (CFS)
+    196.      13.58                 40.          12.         11.         11.
                        (INCHES)    .530         .615        .615        .615
                         (AC-FT)     20.          23.         23.         23.
```



```
                   CUMULATIVE AREA =     .70 SQ MI

*** *** *** *** *** *** *** *** *** *** *** *** *** *** *** *** *** *** *** *** *** *** *** *** *** *** *** *** *** *** *** *** *** ***

           **************
           *            *
 98 KK     *   CB51C    *
           *            *
           **************
                   COMBINE ROUTED FLOW FROM COMPUTATION POINT CVR47C AND SUB-BASIN AVR51C
                   WITH RUNOFF FROM SUB-BASIN BR51C

101 HC      HYDROGRAPH COMBINATION
                  ICOMP          3  NUMBER OF HYDROGRAPHS TO COMBINE

                                           ***

   ***         ***         ***         ***         ***

                   HYDROGRAPH AT STATION    CB51C

  PEAK FLOW     TIME                        MAXIMUM AVERAGE FLOW
                                   6-HR        24-HR       72-HR    24.92-HR
+   (CFS)       (HR)
                           (CFS)
+    278.      13.58                 92.          28.         27.         27.
                        (INCHES)    .464         .557        .557        .557
                         (AC-FT)     46.          55.         55.         55.

                   CUMULATIVE AREA =    1.85 SQ MI

*** *** *** *** *** *** *** *** *** *** *** *** *** *** *** *** *** *** *** *** *** *** *** *** *** *** *** *** *** *** *** *** *** ***

           **************
           *            *
102 KK     *   DR43C    *
           *            *
           **************
                   SUB-BASIN DR43C
                   24-HOUR SCS TYPE II RAINFALL WAS USED TO FIND TC & R FOR THIS BASIN
                   THIS BASIN USED RAINFALL REDUCTION FACTOR OF  .934
                     L = 1.49  Kb = .039  Adj. Slope =   69.0

            SUBBASIN RUNOFF DATA

107 BA      SUBBASIN CHARACTERISTICS
                  TAREA        .92  SUBBASIN AREA

            PRECIPITATION DATA

 32 PB            STORM       3.92  BASIN TOTAL PRECIPITATION

 32 PI        INCREMENTAL PRECIPITATION PATTERN
                .00      .00      .00      .00      .00      .00      .00      .00      .00      .00
                .00      .00      .00      .00      .00      .00      .00      .00      .00      .00
                .00      .00      .00      .00      .00      .00      .00      .00      .00      .00
                .00      .00      .00      .00      .00      .00      .00      .00      .00      .00
                .00      .00      .00      .00      .00      .00      .00      .00      .00      .00
                .00      .00      .00      .00      .00      .00      .00      .00      .00      .00
                .00      .00      .00      .00      .00      .00      .00      .00      .00      .00
                .00      .00      .00      .00      .00      .00      .00      .00      .00      .00
                .00      .00      .00      .00      .00      .00      .00      .00      .00      .00
                .00      .00      .00      .00      .00      .00      .00      .00      .00      .00
                .00      .00      .00      .00      .00      .00      .00      .00      .00      .00
                .00      .00      .00      .00      .00      .00      .00      .00      .00      .00
                .00      .00      .00      .00      .00      .00      .00      .01      .00      .01
                .01      .01      .01      .01      .01      .01      .01      .01      .03      .03
                .03      .09      .09      .09      .01      .01      .01      .01      .01      .01
                .01      .01      .01      .01      .01      .01      .00      .00      .00      .00
                .00      .00      .00      .00      .00      .00      .00      .00      .00      .00
                .00      .00      .00      .00      .00      .00      .00      .00      .00      .00
                .00      .00      .00      .00      .00      .00      .00      .00      .00      .00
                .00      .00      .00      .00      .00      .00      .00      .00      .00      .00
                .00      .00      .00      .00      .00      .00      .00      .00      .00      .00
                .00      .00      .00      .00      .00      .00      .00      .00      .00      .00
                .00      .00      .00      .00      .00      .00      .00      .00      .00      .00
                .00      .00      .00      .00      .00      .00      .00      .00      .00      .00
                .00      .00      .00      .00      .00      .00      .00      .00      .00      .00
                .00      .00      .00      .00      .00      .00      .00      .00      .00      .00
                .00      .00      .00      .00      .00      .00      .00      .00      .00      .00
                .00      .00      .00      .00      .00      .00      .00      .00      .00      .00
                .00      .00      .00      .00      .00      .00      .00      .00

108 LG      GREEN AND AMPT LOSS RATE
                  STRTL        .25  STARTING LOSS
                    DTH        .25  MOISTURE DEFICIT
                   PSIF       5.10  WETTING FRONT SUCTION
                  XKSAT        .30  HYDRAULIC CONDUCTIVITY
```

```
              RTIMP       38.00  PERCENT IMPERVIOUS AREA

 109 UC        CLARK UNITGRAPH
                    TC          .45  TIME OF CONCENTRATION
                    R           .22  STORAGE COEFFICIENT

 110 UA        ACCUMULATED-AREA VS. TIME,  11 ORDINATES
                  .0       5.0      16.0      30.0      65.0      77.0      84.0      90.0      94.0      97.0
               100.0

                                              ***

                                    UNIT HYDROGRAPH PARAMETERS
                              CLARK   TC=    .45 HR,        R=    .22 HR
                              SNYDER  TP=    .24 HR,        CP=   .54

                                         UNIT HYDROGRAPH
                                    17 END-OF-PERIOD ORDINATES
          163.      732.     1255.     1276.     1062.      819.      583.      398.      271.      185.
          126.       86.       58.       40.       27.       19.       13.

      ***          ***          ***          ***          ***

                HYDROGRAPH AT STATION    DR43C

   TOTAL RAINFALL =    3.92, TOTAL LOSS =    1.70, TOTAL EXCESS =    2.22

 PEAK FLOW     TIME                          MAXIMUM AVERAGE FLOW
                                    6-HR       24-HR       72-HR     24.92-HR
 +  (CFS)      (HR)
                          (CFS)
 +   1391.    12.17                  176.        55.         53.         53.
                        (INCHES)    1.779      2.209       2.212       2.212
                         (AC-FT)      87.       109.        109.        109.

                  CUMULATIVE AREA =     .92 SQ MI


*** *** *** *** *** *** *** *** *** *** *** *** *** *** *** *** *** *** *** *** *** *** *** *** *** *** *** *** *** *** *** *** ***

             **************
             *            *
 112 KK      *    DR43R   *
             *            *
             **************
                       DIVERT RETENTION VOLUME

  DT           DIVERSION
                   ISTAD       RET43C  DIVERSION HYDROGRAPH IDENTIFICATION
                   DSTRMX       27.90  MAXIMUM VOLUME TO BE DIVERTED

  DI                 INFLOW       .00   1000.00  10000.00

  DQ        DIVERTED FLOW         .00   1000.00  10000.00

                                              ***

      ***          ***          ***          ***          ***

                  DIVERSION HYDROGRAPH    RET43C

 PEAK FLOW     TIME                          MAXIMUM AVERAGE FLOW
                                    6-HR       24-HR       72-HR     24.92-HR
 +  (CFS)      (HR)
                          (CFS)
 +    451.    11.92                   45.        14.         14.         14.
                        (INCHES)     .458       .567        .567        .567
                         (AC-FT)      23.        28.         28.         28.

                  CUMULATIVE AREA =     .92 SQ MI

      ***          ***          ***          ***          ***

                HYDROGRAPH AT STATION    DR43R

 PEAK FLOW     TIME                          MAXIMUM AVERAGE FLOW
                                    6-HR       24-HR       72-HR     24.92-HR
 +  (CFS)      (HR)
                          (CFS)
 +   1391.    12.17                  150.        41.         39.         39.
                        (INCHES)    1.513      1.644       1.644       1.644
                         (AC-FT)      74.        81.         81.         81.

                  CUMULATIVE AREA =     .92 SQ MI


*** *** *** *** *** *** *** *** *** *** *** *** *** *** *** *** *** *** *** *** *** *** *** *** *** *** *** *** *** *** *** *** ***

             **************
```



```
             *            *
 117 KK      *   43BASN   *
             *            *
             **************
                      *********************PROPOSED BASIN IN SUB-BASIN DR43C*********************
                      DETENTION BASIN AT THE DOBBINS AND 43TH AVE INTERSECTION.
                      THIS IS A BASIN ADDED FOR THE ADMP ALTERNATE 4A
                      THE BASIN HAS 10 AC TOP, 7.2 AC BOTTOM AND IS 10FT DEEP WITH 5:1 SIDE SLOPES

 122 KO        OUTPUT CONTROL VARIABLES
                    IPRNT          1  PRINT CONTROL
                    IPLOT          0  PLOT CONTROL
                    QSCAL         0.  HYDROGRAPH PLOT SCALE

             HYDROGRAPH ROUTING DATA

 123 RS        STORAGE ROUTING
                    NSTPS          1  NUMBER OF SUBREACHES
                     ITYP       ELEV  TYPE OF INITIAL CONDITION
                   RSVRIC        .00  INITIAL CONDITION
                        X        .00 WORKING R AND D COEFFICIENT

 124 SA              AREA        7.2       7.8       8.3       8.9       9.4      10.0

 125 SQ         DISCHARGE         0.       20.       20.       20.       20.       20.

 126 SE         ELEVATION        .00      2.00      4.00      6.00      8.00     10.00

                                              ***

                              COMPUTED STORAGE-ELEVATION DATA

         STORAGE         .00     15.00     31.09     48.29     66.59     85.98
       ELEVATION         .00      2.00      4.00      6.00      8.00     10.00

*****************************************************************************************************************

                                  HYDROGRAPH AT STATION    43BASN

*****************************************************************************************************************
```

DA	MON	HRMN	ORD	OUTFLOW	STORAGE	STAGE	*	DA	MON	HRMN	ORD	OUTFLOW	STORAGE	STAGE	*	DA	MON	HRMN	ORD	OUTFLOW	STORAGE	STAGE
1		0000	1	0.	.0	.0	*	1		0820	101	0.	.0	.0	*	1		1640	201	20.	65.0	7.8
1		0005	2	0.	.0	.0	*	1		0825	102	0.	.0	.0	*	1		1645	202	20.	65.0	7.8
1		0010	3	0.	.0	.0	*	1		0830	103	0.	.0	.0	*	1		1650	203	20.	65.0	7.8
1		0015	4	0.	.0	.0	*	1		0835	104	0.	.0	.0	*	1		1655	204	20.	65.0	7.8
1		0020	5	0.	.0	.0	*	1		0840	105	0.	.0	.0	*	1		1700	205	20.	65.0	7.8
1		0025	6	0.	.0	.0	*	1		0845	106	0.	.0	.0	*	1		1705	206	20.	64.9	7.8
1		0030	7	0.	.0	.0	*	1		0850	107	0.	.0	.0	*	1		1710	207	20.	64.9	7.8
1		0035	8	0.	.0	.0	*	1		0855	108	0.	.0	.0	*	1		1715	208	20.	64.9	7.8
1		0040	9	0.	.0	.0	*	1		0900	109	0.	.0	.0	*	1		1720	209	20.	64.9	7.8
1		0045	10	0.	.0	.0	*	1		0905	110	0.	.0	.0	*	1		1725	210	20.	64.9	7.8
1		0050	11	0.	.0	.0	*	1		0910	111	0.	.0	.0	*	1		1730	211	20.	64.9	7.8
1		0055	12	0.	.0	.0	*	1		0915	112	0.	.0	.0	*	1		1735	212	20.	64.9	7.8
1		0100	13	0.	.0	.0	*	1		0920	113	0.	.0	.0	*	1		1740	213	20.	64.8	7.8
1		0105	14	0.	.0	.0	*	1		0925	114	0.	.0	.0	*	1		1745	214	20.	64.8	7.8
1		0110	15	0.	.0	.0	*	1		0930	115	0.	.0	.0	*	1		1750	215	20.	64.8	7.8
1		0115	16	0.	.0	.0	*	1		0935	116	0.	.0	.0	*	1		1755	216	20.	64.8	7.8
1		0120	17	0.	.0	.0	*	1		0940	117	0.	.0	.0	*	1		1800	217	20.	64.8	7.8
1		0125	18	0.	.0	.0	*	1		0945	118	0.	.0	.0	*	1		1805	218	20.	64.7	7.8
1		0130	19	0.	.0	.0	*	1		0950	119	0.	.0	.0	*	1		1810	219	20.	64.7	7.8
1		0135	20	0.	.0	.0	*	1		0955	120	0.	.0	.0	*	1		1815	220	20.	64.7	7.8
1		0140	21	0.	.0	.0	*	1		1000	121	0.	.0	.0	*	1		1820	221	20.	64.6	7.8
1		0145	22	0.	.0	.0	*	1		1005	122	0.	.0	.0	*	1		1825	222	20.	64.6	7.8
1		0150	23	0.	.0	.0	*	1		1010	123	0.	.0	.0	*	1		1830	223	20.	64.6	7.8
1		0155	24	0.	.0	.0	*	1		1015	124	0.	.0	.0	*	1		1835	224	20.	64.5	7.8
1		0200	25	0.	.0	.0	*	1		1020	125	0.	.0	.0	*	1		1840	225	20.	64.5	7.8
1		0205	26	0.	.0	.0	*	1		1025	126	0.	.0	.0	*	1		1845	226	20.	64.5	7.8
1		0210	27	0.	.0	.0	*	1		1030	127	0.	.0	.0	*	1		1850	227	20.	64.4	7.8
1		0215	28	0.	.0	.0	*	1		1035	128	0.	.0	.0	*	1		1855	228	20.	64.4	7.8
1		0220	29	0.	.0	.0	*	1		1040	129	0.	.0	.0	*	1		1900	229	20.	64.3	7.8
1		0225	30	0.	.0	.0	*	1		1045	130	0.	.0	.0	*	1		1905	230	20.	64.3	7.7
1		0230	31	0.	.0	.0	*	1		1050	131	0.	.0	.0	*	1		1910	231	20.	64.3	7.7
1		0235	32	0.	.0	.0	*	1		1055	132	0.	.0	.0	*	1		1915	232	20.	64.2	7.7
1		0240	33	0.	.0	.0	*	1		1100	133	0.	.0	.0	*	1		1920	233	20.	64.2	7.7
1		0245	34	0.	.0	.0	*	1		1105	134	0.	.0	.0	*	1		1925	234	20.	64.1	7.7
1		0250	35	0.	.0	.0	*	1		1110	135	0.	.0	.0	*	1		1930	235	20.	64.1	7.7
1		0255	36	0.	.0	.0	*	1		1115	136	0.	.0	.0	*	1		1935	236	20.	64.1	7.7
1		0300	37	0.	.0	.0	*	1		1120	137	0.	.0	.0	*	1		1940	237	20.	64.0	7.7
1		0305	38	0.	.0	.0	*	1		1125	138	0.	.0	.0	*	1		1945	238	20.	64.0	7.7
1		0310	39	0.	.0	.0	*	1		1130	139	0.	.0	.0	*	1		1950	239	20.	63.9	7.7
1		0315	40	0.	.0	.0	*	1		1135	140	0.	.0	.0	*	1		1955	240	20.	63.9	7.7
1		0320	41	0.	.0	.0	*	1		1140	141	0.	.0	.0	*	1		2000	241	20.	63.8	7.7
1		0325	42	0.	.0	.0	*	1		1145	142	0.	.0	.0	*	1		2005	242	20.	63.8	7.7
1		0330	43	0.	.0	.0	*	1		1150	143	0.	.0	.0	*	1		2010	243	20.	63.7	7.7
1		0335	44	0.	.0	.0	*	1		1155	144	1.	.8	.1	*	1		2015	244	20.	63.7	7.7
1		0340	45	0.	.0	.0	*	1		1200	145	7.	5.1	.7	*	1		2020	245	20.	63.6	7.7
1		0345	46	0.	.0	.0	*	1		1205	146	18.	13.2	1.8	*	1		2025	246	20.	63.6	7.7
1		0350	47	0.	.0	.0	*	1		1210	147	20.	22.5	2.9	*	1		2030	247	20.	63.5	7.7
1		0355	48	0.	.0	.0	*	1		1215	148	20.	31.4	4.0	*	1		2035	248	20.	63.4	7.7
1		0400	49	0.	.0	.0	*	1		1220	149	20.	38.8	4.9	*	1		2040	249	20.	63.4	7.6
1		0405	50	0.	.0	.0	*	1		1225	150	20.	44.7	5.6	*	1		2045	250	20.	63.3	7.6
1		0410	51	0.	.0	.0	*	1		1230	151	20.	49.1	6.1	*	1		2050	251	20.	63.2	7.6
1		0415	52	0.	.0	.0	*	1		1235	152	20.	52.4	6.4	*	1		2055	252	20.	63.2	7.6
1		0420	53	0.	.0	.0	*	1		1240	153	20.	54.8	6.7	*	1		2100	253	20.	63.1	7.6

1	0425	54	0.	.0	.0 *	1	1245	154	20.	56.6	6.9 *	1	2105	254	20.	63.1	7.6
1	0430	55	0.	.0	.0 *	1	1250	155	20.	58.0	7.1 *	1	2110	255	20.	63.0	7.6
1	0435	56	0.	.0	.0 *	1	1255	156	20.	59.0	7.2 *	1	2115	256	20.	62.9	7.6
1	0440	57	0.	.0	.0 *	1	1300	157	20.	59.9	7.3 *	1	2120	257	20.	62.9	7.6
1	0445	58	0.	.0	.0 *	1	1305	158	20.	60.5	7.3 *	1	2125	258	20.	62.8	7.6
1	0450	59	0.	.0	.0 *	1	1310	159	20.	61.1	7.4 *	1	2130	259	20.	62.7	7.6
1	0455	60	0.	.0	.0 *	1	1315	160	20.	61.5	7.4 *	1	2135	260	20.	62.7	7.6
1	0500	61	0.	.0	.0 *	1	1320	161	20.	61.9	7.5 *	1	2140	261	20.	62.6	7.6
1	0505	62	0.	.0	.0 *	1	1325	162	20.	62.2	7.5 *	1	2145	262	20.	62.5	7.6
1	0510	63	0.	.0	.0 *	1	1330	163	20.	62.4	7.5 *	1	2150	263	20.	62.5	7.5
1	0515	64	0.	.0	.0 *	1	1335	164	20.	62.7	7.6 *	1	2155	264	20.	62.4	7.5
1	0520	65	0.	.0	.0 *	1	1340	165	20.	62.9	7.6 *	1	2200	265	20.	62.3	7.5
1	0525	66	0.	.0	.0 *	1	1345	166	20.	63.1	7.6 *	1	2205	266	20.	62.3	7.5
1	0530	67	0.	.0	.0 *	1	1350	167	20.	63.3	7.6 *	1	2210	267	20.	62.2	7.5
1	0535	68	0.	.0	.0 *	1	1355	168	20.	63.4	7.7 *	1	2215	268	20.	62.1	7.5
1	0540	69	0.	.0	.0 *	1	1400	169	20.	63.6	7.7 *	1	2220	269	20.	62.1	7.5
1	0545	70	0.	.0	.0 *	1	1405	170	20.	63.7	7.7 *	1	2225	270	20.	62.0	7.5
1	0550	71	0.	.0	.0 *	1	1410	171	20.	63.8	7.7 *	1	2230	271	20.	62.0	7.5
1	0555	72	0.	.0	.0 *	1	1415	172	20.	63.9	7.7 *	1	2235	272	20.	61.9	7.5
1	0600	73	0.	.0	.0 *	1	1420	173	20.	64.1	7.7 *	1	2240	273	20.	61.8	7.5
1	0605	74	0.	.0	.0 *	1	1425	174	20.	64.1	7.7 *	1	2245	274	20.	61.8	7.5
1	0610	75	0.	.0	.0 *	1	1430	175	20.	64.2	7.7 *	1	2250	275	20.	61.7	7.5
1	0615	76	0.	.0	.0 *	1	1435	176	20.	64.3	7.8 *	1	2255	276	20.	61.6	7.5
1	0620	77	0.	.0	.0 *	1	1440	177	20.	64.4	7.8 *	1	2300	277	20.	61.6	7.5
1	0625	78	0.	.0	.0 *	1	1445	178	20.	64.4	7.8 *	1	2305	278	20.	61.5	7.4
1	0630	79	0.	.0	.0 *	1	1450	179	20.	64.5	7.8 *	1	2310	279	20.	61.4	7.4
1	0635	80	0.	.0	.0 *	1	1455	180	20.	64.6	7.8 *	1	2315	280	20.	61.4	7.4
1	0640	81	0.	.0	.0 *	1	1500	181	20.	64.6	7.8 *	1	2320	281	20.	61.3	7.4
1	0645	82	0.	.0	.0 *	1	1505	182	20.	64.6	7.8 *	1	2325	282	20.	61.2	7.4
1	0650	83	0.	.0	.0 *	1	1510	183	20.	64.7	7.8 *	1	2330	283	20.	61.2	7.4
1	0655	84	0.	.0	.0 *	1	1515	184	20.	64.7	7.8 *	1	2335	284	20.	61.1	7.4
1	0700	85	0.	.0	.0 *	1	1520	185	20.	64.7	7.8 *	1	2340	285	20.	61.0	7.4
1	0705	86	0.	.0	.0 *	1	1525	186	20.	64.8	7.8 *	1	2345	286	20.	61.0	7.4
1	0710	87	0.	.0	.0 *	1	1530	187	20.	64.8	7.8 *	1	2350	287	20.	60.9	7.4
1	0715	88	0.	.0	.0 *	1	1535	188	20.	64.8	7.8 *	1	2355	288	20.	60.8	7.4
1	0720	89	0.	.0	.0 *	1	1540	189	20.	64.8	7.8 *	2	0000	289	20.	60.8	7.4
1	0725	90	0.	.0	.0 *	1	1545	190	20.	64.9	7.8 *	2	0005	290	20.	60.7	7.4
1	0730	91	0.	.0	.0 *	1	1550	191	20.	64.9	7.8 *	2	0010	291	20.	60.6	7.3
1	0735	92	0.	.0	.0 *	1	1555	192	20.	64.9	7.8 *	2	0015	292	20.	60.5	7.3
1	0740	93	0.	.0	.0 *	1	1600	193	20.	64.9	7.8 *	2	0020	293	20.	60.4	7.3
1	0745	94	0.	.0	.0 *	1	1605	194	20.	64.9	7.8 *	2	0025	294	20.	60.3	7.3
1	0750	95	0.	.0	.0 *	1	1610	195	20.	64.9	7.8 *	2	0030	295	20.	60.2	7.3
1	0755	96	0.	.0	.0 *	1	1615	196	20.	64.9	7.8 *	2	0035	296	20.	60.1	7.3
1	0800	97	0.	.0	.0 *	1	1620	197	20.	64.9	7.8 *	2	0040	297	20.	59.9	7.3
1	0805	98	0.	.0	.0 *	1	1625	198	20.	64.9	7.8 *	2	0045	298	20.	59.8	7.3
1	0810	99	0.	.0	.0 *	1	1630	199	20.	65.0	7.8 *	2	0050	299	20.	59.7	7.2
1	0815	100	0.	.0	.0 *	1	1635	200	20.	65.0	7.8 *	2	0055	300	20.	59.5	7.2
					*						*						

```
*****************************************************************************************************

PEAK FLOW      TIME                          MAXIMUM AVERAGE FLOW
                                       6-HR       24-HR       72-HR      24.92-HR
+  (CFS)        (HR)
                             (CFS)
+    20.       12.17                    20.         11.         10.         10.
                            (INCHES)   .202        .434        .434        .434
                             (AC-FT)    10.         21.         21.         21.

PEAK STORAGE   TIME                         MAXIMUM AVERAGE STORAGE
                                       6-HR       24-HR       72-HR      24.92-HR
+  (AC-FT)      (HR)
     65.       16.75                    65.         33.         32.         32.

PEAK STAGE     TIME                          MAXIMUM AVERAGE STAGE
                                       6-HR       24-HR       72-HR      24.92-HR
+  (FEET)       (HR)
     7.82      16.75                   7.78        4.02        3.87        3.87

                        CUMULATIVE AREA =     .92 SQ MI


*** *** *** *** *** *** *** *** *** *** *** *** *** *** *** *** *** *** *** *** *** *** *** *** *** *** *** *** *** *** *** *** *** ***

            **************
            *            *
127 KK      *   ROA51A   *
            *            *
            **************
                         **************DOBBINS ROAD STORM DRAIN****************************
                         ROUTE FLOW FROM DR43C WEST (1ST REACH) ALONG DOBBINS TO 47TH AVENUE

             HYDROGRAPH ROUTING DATA

130 RK         KINEMATIC WAVE STREAM ROUTING
                        L        2790.  CHANNEL LENGTH
                        S        .0042  SLOPE
                        N         .013  CHANNEL ROUGHNESS COEFFICIENT
                       CA          .00  CONTRIBUTING AREA
                    SHAPE         CIRC  CHANNEL SHAPE
                       WD         3.00  BOTTOM WIDTH OR DIAMETER
                        Z          .00  SIDE SLOPE
                   NDXMIN            2  MINIMUM NUMBER OF DX INTERVALS
```



```
                                              ***
                                  COMPUTED KINEMATIC PARAMETERS
                                        VARIABLE TIME STEP
                                      (DT SHOWN IS A MINIMUM)

     ELEMENT    ALPHA      M         DT         DX       PEAK    TIME TO     VOLUME     MAXIMUM
                                                                   PEAK                 CELERITY
                                    (MIN)      (FT)      (CFS)     (MIN)      (IN)        (FPS)

    MAIN         4.81     1.25       2.07     930.00     20.13    1496.05      .43        8.00

CONTINUITY SUMMARY (AC-FT) - INFLOW= .2132E+02  EXCESS= .0000E+00 OUTFLOW= .2121E+02 BASIN STORAGE= .1149E+00 PERCENT ERROR=    .0

                            INTERPOLATED TO SPECIFIED COMPUTATION INTERVAL

    MAIN         4.81     1.25       5.00                20.06    1495.00      .43

       ***          ***          ***          ***          ***

                       HYDROGRAPH AT STATION   ROA51A

 PEAK FLOW      TIME                          MAXIMUM AVERAGE FLOW
                                       6-HR       24-HR       72-HR      24.92-HR
+  (CFS)        (HR)
                             (CFS)
+    20.       24.92                    20.         11.         10.         10.
                            (INCHES)   .202        .431        .431        .431
                             (AC-FT)    10.         21.         21.         21.

                        CUMULATIVE AREA =     .92 SQ MI


*** *** *** *** *** *** *** *** *** *** *** *** *** *** *** *** *** *** *** *** *** *** *** *** *** *** *** *** *** *** *** *** *** ***

            **************
            *            *
131 KK      *   ROA51B   *
            *            *
            **************
                         ****************DOBBINS ROAD STORM DRAIN****************************
                         ROUTE FLOW ALONG DOBBINS FROM 47TH TO 51ST AVENUES
                         CROSS-SECTION REVISED TO REFLECT TO USE STORM DRAIN

             HYDROGRAPH ROUTING DATA

135 RK         KINEMATIC WAVE STREAM ROUTING
                        L        2640.  CHANNEL LENGTH
                        S        .0033  SLOPE
                        N         .013  CHANNEL ROUGHNESS COEFFICIENT
                       CA          .00  CONTRIBUTING AREA
                    SHAPE         CIRC  CHANNEL SHAPE
                       WD         3.00  BOTTOM WIDTH OR DIAMETER
                        Z          .00  SIDE SLOPE
                   NDXMIN            2  MINIMUM NUMBER OF DX INTERVALS

                                              ***
                                  COMPUTED KINEMATIC PARAMETERS
                                        VARIABLE TIME STEP
                                      (DT SHOWN IS A MINIMUM)

     ELEMENT    ALPHA      M         DT         DX       PEAK    TIME TO     VOLUME     MAXIMUM
                                                                   PEAK                 CELERITY
                                    (MIN)      (FT)      (CFS)     (MIN)      (IN)        (FPS)

    MAIN         4.27     1.25       2.10     880.00     20.13    1495.80      .43        7.27

CONTINUITY SUMMARY (AC-FT) - INFLOW= .2119E+02  EXCESS= .0000E+00 OUTFLOW= .2107E+02 BASIN STORAGE= .1222E+00 PERCENT ERROR=    .0

                            INTERPOLATED TO SPECIFIED COMPUTATION INTERVAL

    MAIN         4.27     1.25       5.00                20.08    1495.00      .43

       ***          ***          ***          ***          ***

                       HYDROGRAPH AT STATION   ROA51B

 PEAK FLOW      TIME                          MAXIMUM AVERAGE FLOW
                                       6-HR       24-HR       72-HR      24.92-HR
+  (CFS)        (HR)
                             (CFS)
+    20.       24.92                    20.         11.         10.         10.
                            (INCHES)   .202        .428        .428        .428
                             (AC-FT)    10.         21.         21.         21.

                        CUMULATIVE AREA =     .92 SQ MI
```

*** ***

```
              **************
              *            *
136 KK        *    OA51B   *
              *            *
              **************
```

SUB-BASIN OA51B
24-HOUR SCS TYPE II RAINFALL WAS USED TO FIND TC & R FOR THIS BASIN
THIS BASIN USED RAINFALL REDUCTION FACTOR OF .934
L = 1.26 Kb = .036 Adj. Slope = 254.0

SUBBASIN RUNOFF DATA

141 BA SUBBASIN CHARACTERISTICS
TAREA 1.03 SUBBASIN AREA

PRECIPITATION DATA

32 PB STORM 3.92 BASIN TOTAL PRECIPITATION

32 PI INCREMENTAL PRECIPITATION PATTERN

.00	.00	.00	.00	.00	.00	.00	.00	.00	.00
.00	.00	.00	.00	.00	.00	.00	.00	.00	.00
.00	.00	.00	.00	.00	.00	.00	.00	.00	.00
.00	.00	.00	.00	.00	.00	.00	.00	.00	.00
.00	.00	.00	.00	.00	.00	.00	.00	.00	.00
.00	.00	.00	.00	.00	.00	.00	.00	.00	.00
.00	.00	.00	.00	.00	.00	.00	.00	.00	.00
.00	.00	.00	.00	.00	.00	.00	.00	.00	.00
.00	.00	.00	.00	.00	.00	.00	.00	.00	.00
.00	.00	.00	.00	.00	.00	.00	.00	.00	.00
.00	.00	.00	.00	.00	.00	.00	.00	.00	.00
.00	.00	.00	.00	.00	.00	.00	.00	.00	.00
.00	.00	.00	.00	.00	.00	.00	.01	.00	.01
.01	.01	.01	.01	.01	.01	.01	.01	.03	.03
.03	.09	.09	.09	.01	.01	.01	.01	.01	.01
.01	.01	.01	.01	.01	.01	.00	.00	.00	.00
.00	.00	.00	.00	.00	.00	.00	.00	.00	.00
.00	.00	.00	.00	.00	.00	.00	.00	.00	.00
.00	.00	.00	.00	.00	.00	.00	.00	.00	.00
.00	.00	.00	.00	.00	.00	.00	.00	.00	.00
.00	.00	.00	.00	.00	.00	.00	.00	.00	.00
.00	.00	.00	.00	.00	.00	.00	.00	.00	.00
.00	.00	.00	.00	.00	.00	.00	.00	.00	.00
.00	.00	.00	.00	.00	.00	.00	.00	.00	.00
.00	.00	.00	.00	.00	.00	.00	.00	.00	.00
.00	.00	.00	.00	.00	.00	.00	.00	.00	.00
.00	.00	.00	.00	.00	.00	.00	.00	.00	.00
.00	.00	.00	.00	.00	.00	.00	.00	.00	.00
.00	.00	.00	.00	.00	.00	.00	.00		

142 LG GREEN AND AMPT LOSS RATE

STRTL	.27	STARTING LOSS
DTH	.27	MOISTURE DEFICIT
PSIF	6.00	WETTING FRONT SUCTION
XKSAT	.20	HYDRAULIC CONDUCTIVITY
RTIMP	30.00	PERCENT IMPERVIOUS AREA

143 UC CLARK UNITGRAPH

TC	.23	TIME OF CONCENTRATION
R	.07	STORAGE COEFFICIENT

144 UA ACCUMULATED-AREA VS. TIME, 11 ORDINATES

.0	5.0	16.0	30.0	65.0	77.0	84.0	90.0	94.0	97.0
100.0									

***

UNIT HYDROGRAPH PARAMETERS
CLARK TC= .23 HR, R= .07 HR
SNYDER TP= .13 HR, CP= .67

UNIT HYDROGRAPH
6 END-OF-PERIOD ORDINATES

1442.	3007.	2272.	905.	253.	71.

*** *** *** *** ***

HYDROGRAPH AT STATION OA51B

TOTAL RAINFALL = 3.92, TOTAL LOSS = 1.85, TOTAL EXCESS = 2.07

PEAK FLOW	TIME		MAXIMUM AVERAGE FLOW			
			6-HR	24-HR	72-HR	24.92-HR
+ (CFS)	(HR)					
		(CFS)				
+ 2353.	12.00		191.	57.	55.	55.
		(INCHES)	1.722	2.063	2.064	2.064
		(AC-FT)	95.	113.	113.	113.

CUMULATIVE AREA = 1.03 SQ MI

*** ***

```
              **************
              *            *
146 KK        *    OA51R   *
              *            *
              **************
```

DIVERT RETENTION VOLUME

DT DIVERSION

ISTAD	RET51	DIVERSION HYDROGRAPH IDENTIFICATION
DSTRMX	80.90	MAXIMUM VOLUME TO BE DIVERTED

DI	INFLOW	.00	1000.00	10000.00
DQ	DIVERTED FLOW	.00	1000.00	10000.00

***

*** *** *** *** ***

DIVERSION HYDROGRAPH RET51

PEAK FLOW	TIME		MAXIMUM AVERAGE FLOW			
			6-HR	24-HR	72-HR	24.92-HR
+ (CFS)	(HR)					
		(CFS)				
+ 2353.	12.00		153.	41.	39.	39.
		(INCHES)	1.377	1.473	1.473	1.473
		(AC-FT)	76.	81.	81.	81.

CUMULATIVE AREA = 1.03 SQ MI

*** *** *** *** ***

HYDROGRAPH AT STATION OA51R

PEAK FLOW	TIME		MAXIMUM AVERAGE FLOW			
			6-HR	24-HR	72-HR	24.92-HR
+ (CFS)	(HR)					
		(CFS)				
+ 900.	12.17		55.	16.	16.	16.
		(INCHES)	.498	.591	.591	.591
		(AC-FT)	27.	32.	32.	32.

CUMULATIVE AREA = 1.03 SQ MI

*** ***

```
              **************
              *            *
151 KK        *   DRBASN   *
              *            *
              **************
```

***************PROPOSED DETENTION BASIN IN SUB-BASIN OA51B******************
DETENTION BASIN AT THE DOBBINS AND 51ST AVE INTERSECTION.
THIS BASIN WAS ADDED FOR THE ADMP ALTERNATE 4
BASIN HAS 10 AC TOP, 8.5 AC BOTTOM AND IS 5 FT DEEP WITH 5:1 SIDE SLOPES

156 KO OUTPUT CONTROL VARIABLES

IPRNT	1	PRINT CONTROL
IPLOT	0	PLOT CONTROL
QSCAL	0.	HYDROGRAPH PLOT SCALE

HYDROGRAPH ROUTING DATA

157 RS STORAGE ROUTING

NSTPS	1	NUMBER OF SUBREACHES
ITYP	ELEV	TYPE OF INITIAL CONDITION
RSVRIC	.00	INITIAL CONDITION
X	.00	WORKING R AND D COEFFICIENT

158 SA	AREA	8.5	8.8	9.1	9.4	9.7	10.0
159 SQ	DISCHARGE	0.	20.	20.	20.	20.	20.
160 SE	ELEVATION	.00	2.00	4.00	6.00	5.00	10.00

***

COMPUTED STORAGE-ELEVATION DATA

STORAGE	.00	17.30	35.20	53.70	44.15	93.40
ELEVATION	.00	2.00	4.00	6.00	5.00	10.00

****

HYDROGRAPH AT STATION DRBASN

DA MON	HRMN	ORD	OUTFLOW	STORAGE	STAGE	DA MON	HRMN	ORD	OUTFLOW	STORAGE	STAGE	DA MON	HRMN	ORD	OUTFLOW	STORAGE	STAGE
1	0000	1	0.	.0	.0	1	0820	101	0.	.0	.0	1	1640	201	20.	18.5	2.1
1	0005	2	0.	.0	.0	1	0825	102	0.	.0	.0	1	1645	202	20.	18.4	2.1
1	0010	3	0.	.0	.0	1	0830	103	0.	.0	.0	1	1650	203	20.	18.4	2.1
1	0015	4	0.	.0	.0	1	0835	104	0.	.0	.0	1	1655	204	20.	18.4	2.1
1	0020	5	0.	.0	.0	1	0840	105	0.	.0	.0	1	1700	205	20.	18.4	2.1
1	0025	6	0.	.0	.0	1	0845	106	0.	.0	.0	1	1705	206	20.	18.3	2.1
1	0030	7	0.	.0	.0	1	0850	107	0.	.0	.0	1	1710	207	20.	18.3	2.1
1	0035	8	0.	.0	.0	1	0855	108	0.	.0	.0	1	1715	208	20.	18.3	2.1
1	0040	9	0.	.0	.0	1	0900	109	0.	.0	.0	1	1720	209	20.	18.2	2.1
1	0045	10	0.	.0	.0	1	0905	110	0.	.0	.0	1	1725	210	20.	18.2	2.1
1	0050	11	0.	.0	.0	1	0910	111	0.	.0	.0	1	1730	211	20.	18.2	2.1
1	0055	12	0.	.0	.0	1	0915	112	0.	.0	.0	1	1735	212	20.	18.1	2.1
1	0100	13	0.	.0	.0	1	0920	113	0.	.0	.0	1	1740	213	20.	18.1	2.1
1	0105	14	0.	.0	.0	1	0925	114	0.	.0	.0	1	1745	214	20.	18.1	2.1
1	0110	15	0.	.0	.0	1	0930	115	0.	.0	.0	1	1750	215	20.	18.1	2.1
1	0115	16	0.	.0	.0	1	0935	116	0.	.0	.0	1	1755	216	20.	18.0	2.1
1	0120	17	0.	.0	.0	1	0940	117	0.	.0	.0	1	1800	217	20.	18.0	2.1
1	0125	18	0.	.0	.0	1	0945	118	0.	.0	.0	1	1805	218	20.	17.9	2.1
1	0130	19	0.	.0	.0	1	0950	119	0.	.0	.0	1	1810	219	20.	17.9	2.1
1	0135	20	0.	.0	.0	1	0955	120	0.	.0	.0	1	1815	220	20.	17.8	2.1
1	0140	21	0.	.0	.0	1	1000	121	0.	.0	.0	1	1820	221	20.	17.8	2.1
1	0145	22	0.	.0	.0	1	1005	122	0.	.0	.0	1	1825	222	20.	17.7	2.0
1	0150	23	0.	.0	.0	1	1010	123	0.	.0	.0	1	1830	223	20.	17.7	2.0
1	0155	24	0.	.0	.0	1	1015	124	0.	.0	.0	1	1835	224	20.	17.6	2.0
1	0200	25	0.	.0	.0	1	1020	125	0.	.0	.0	1	1840	225	20.	17.6	2.0
1	0205	26	0.	.0	.0	1	1025	126	0.	.0	.0	1	1845	226	20.	17.5	2.0
1	0210	27	0.	.0	.0	1	1030	127	0.	.0	.0	1	1850	227	20.	17.5	2.0
1	0215	28	0.	.0	.0	1	1035	128	0.	.0	.0	1	1855	228	20.	17.4	2.0
1	0220	29	0.	.0	.0	1	1040	129	0.	.0	.0	1	1900	229	20.	17.3	2.0
1	0225	30	0.	.0	.0	1	1045	130	0.	.0	.0	1	1905	230	20.	17.3	2.0
1	0230	31	0.	.0	.0	1	1050	131	0.	.0	.0	1	1910	231	20.	17.2	2.0
1	0235	32	0.	.0	.0	1	1055	132	0.	.0	.0	1	1915	232	20.	17.2	2.0
1	0240	33	0.	.0	.0	1	1100	133	0.	.0	.0	1	1920	233	20.	17.1	2.0
1	0245	34	0.	.0	.0	1	1105	134	0.	.0	.0	1	1925	234	20.	17.1	2.0
1	0250	35	0.	.0	.0	1	1110	135	0.	.0	.0	1	1930	235	20.	17.0	2.0
1	0255	36	0.	.0	.0	1	1115	136	0.	.0	.0	1	1935	236	20.	17.0	2.0
1	0300	37	0.	.0	.0	1	1120	137	0.	.0	.0	1	1940	237	20.	16.9	2.0
1	0305	38	0.	.0	.0	1	1125	138	0.	.0	.0	1	1945	238	20.	16.9	2.0
1	0310	39	0.	.0	.0	1	1130	139	0.	.0	.0	1	1950	239	19.	16.8	1.9
1	0315	40	0.	.0	.0	1	1135	140	0.	.0	.0	1	1955	240	19.	16.8	1.9
1	0320	41	0.	.0	.0	1	1140	141	0.	.0	.0	1	2000	241	19.	16.7	1.9
1	0325	42	0.	.0	.0	1	1145	142	0.	.0	.0	1	2005	242	19.	16.7	1.9
1	0330	43	0.	.0	.0	1	1150	143	0.	.0	.0	1	2010	243	19.	16.6	1.9
1	0335	44	0.	.0	.0	1	1155	144	0.	.0	.0	1	2015	244	19.	16.5	1.9
1	0340	45	0.	.0	.0	1	1200	145	0.	.0	.0	1	2020	245	19.	16.5	1.9
1	0345	46	0.	.0	.0	1	1205	146	0.	.0	.0	1	2025	246	19.	16.4	1.9
1	0350	47	0.	.0	.0	1	1210	147	4.	3.1	.4	1	2030	247	19.	16.3	1.9
1	0355	48	0.	.0	.0	1	1215	148	10.	8.2	1.0	1	2035	248	19.	16.3	1.9
1	0400	49	0.	.0	.0	1	1220	149	13.	11.3	1.3	1	2040	249	19.	16.2	1.9
1	0405	50	0.	.0	.0	1	1225	150	15.	12.9	1.5	1	2045	250	19.	16.1	1.9
1	0410	51	0.	.0	.0	1	1230	151	16.	13.7	1.6	1	2050	251	19.	16.1	1.9
1	0415	52	0.	.0	.0	1	1235	152	17.	14.3	1.7	1	2055	252	19.	16.0	1.9
1	0420	53	0.	.0	.0	1	1240	153	17.	14.8	1.7	1	2100	253	18.	15.9	1.8
1	0425	54	0.	.0	.0	1	1245	154	18.	15.2	1.8	1	2105	254	18.	15.9	1.8
1	0430	55	0.	.0	.0	1	1250	155	18.	15.6	1.8	1	2110	255	18.	15.8	1.8
1	0435	56	0.	.0	.0	1	1255	156	18.	15.9	1.8	1	2115	256	18.	15.8	1.8
1	0440	57	0.	.0	.0	1	1300	157	19.	16.2	1.9	1	2120	257	18.	15.7	1.8
1	0445	58	0.	.0	.0	1	1305	158	19.	16.5	1.9	1	2125	258	18.	15.6	1.8
1	0450	59	0.	.0	.0	1	1310	159	19.	16.7	1.9	1	2130	259	18.	15.6	1.8
1	0455	60	0.	.0	.0	1	1315	160	20.	16.9	2.0	1	2135	260	18.	15.5	1.8
1	0500	61	0.	.0	.0	1	1320	161	20.	17.1	2.0	1	2140	261	18.	15.5	1.8
1	0505	62	0.	.0	.0	1	1325	162	20.	17.3	2.0	1	2145	262	18.	15.4	1.8
1	0510	63	0.	.0	.0	1	1330	163	20.	17.4	2.0	1	2150	263	18.	15.3	1.8
1	0515	64	0.	.0	.0	1	1335	164	20.	17.6	2.0	1	2155	264	18.	15.3	1.8
1	0520	65	0.	.0	.0	1	1340	165	20.	17.7	2.0	1	2200	265	18.	15.2	1.8
1	0525	66	0.	.0	.0	1	1345	166	20.	17.8	2.1	1	2205	266	18.	15.2	1.8
1	0530	67	0.	.0	.0	1	1350	167	20.	17.9	2.1	1	2210	267	17.	15.1	1.7
1	0535	68	0.	.0	.0	1	1355	168	20.	18.0	2.1	1	2215	268	17.	15.1	1.7
1	0540	69	0.	.0	.0	1	1400	169	20.	18.1	2.1	1	2220	269	17.	15.0	1.7
1	0545	70	0.	.0	.0	1	1405	170	20.	18.2	2.1	1	2225	270	17.	14.9	1.7
1	0550	71	0.	.0	.0	1	1410	171	20.	18.2	2.1	1	2230	271	17.	14.9	1.7
1	0555	72	0.	.0	.0	1	1415	172	20.	18.3	2.1	1	2235	272	17.	14.8	1.7
1	0600	73	0.	.0	.0	1	1420	173	20.	18.3	2.1	1	2240	273	17.	14.8	1.7
1	0605	74	0.	.0	.0	1	1425	174	20.	18.4	2.1	1	2245	274	17.	14.7	1.7
1	0610	75	0.	.0	.0	1	1430	175	20.	18.4	2.1	1	2250	275	17.	14.7	1.7
1	0615	76	0.	.0	.0	1	1435	176	20.	18.5	2.1	1	2255	276	17.	14.6	1.7
1	0620	77	0.	.0	.0	1	1440	177	20.	18.5	2.1	1	2300	277	17.	14.6	1.7
1	0625	78	0.	.0	.0	1	1445	178	20.	18.5	2.1	1	2305	278	17.	14.5	1.7
1	0630	79	0.	.0	.0	1	1450	179	20.	18.5	2.1	1	2310	279	17.	14.5	1.7
1	0635	80	0.	.0	.0	1	1455	180	20.	18.5	2.1	1	2315	280	17.	14.4	1.7
1	0640	81	0.	.0	.0	1	1500	181	20.	18.6	2.1	1	2320	281	17.	14.4	1.7
1	0645	82	0.	.0	.0	1	1505	182	20.	18.6	2.1	1	2325	282	17.	14.3	1.7
1	0650	83	0.	.0	.0	1	1510	183	20.	18.6	2.1	1	2330	283	17.	14.3	1.7
1	0655	84	0.	.0	.0	1	1515	184	20.	18.6	2.1	1	2335	284	16.	14.2	1.6
1	0700	85	0.	.0	.0	1	1520	185	20.	18.6	2.1	1	2340	285	16.	14.2	1.6
1	0705	86	0.	.0	.0	1	1525	186	20.	18.6	2.1	1	2345	286	16.	14.1	1.6
1	0710	87	0.	.0	.0	1	1530	187	20.	18.6	2.1	1	2350	287	16.	14.1	1.6
1	0715	88	0.	.0	.0	1	1535	188	20.	18.6	2.1	1	2355	288	16.	14.0	1.6
1	0720	89	0.	.0	.0	1	1540	189	20.	18.6	2.1	2	0000	289	16.	14.0	1.6
1	0725	90	0.	.0	.0	1	1545	190	20.	18.6	2.1	2	0005	290	16.	13.9	1.6

DA MON	HRMN	ORD	OUTFLOW	STORAGE	STAGE	DA MON	HRMN	ORD	OUTFLOW	STORAGE	STAGE	DA MON	HRMN	ORD	OUTFLOW	STORAGE	STAGE
1	0730	91	0.	.0	.0	1	1550	191	20.	18.6	2.1	2	0010	291	16.	13.8	1.6
1	0735	92	0.	.0	.0	1	1555	192	20.	18.6	2.1	2	0015	292	16.	13.7	1.6
1	0740	93	0.	.0	.0	1	1600	193	20.	18.6	2.1	2	0020	293	16.	13.6	1.6
1	0745	94	0.	.0	.0	1	1605	194	20.	18.5	2.1	2	0025	294	16.	13.5	1.6
1	0750	95	0.	.0	.0	1	1610	195	20.	18.5	2.1	2	0030	295	15.	13.4	1.5
1	0755	96	0.	.0	.0	1	1615	196	20.	18.5	2.1	2	0035	296	15.	13.3	1.5
1	0800	97	0.	.0	.0	1	1620	197	20.	18.5	2.1	2	0040	297	15.	13.2	1.5
1	0805	98	0.	.0	.0	1	1625	198	20.	18.5	2.1	2	0045	298	15.	13.1	1.5
1	0810	99	0.	.0	.0	1	1630	199	20.	18.5	2.1	2	0050	299	15.	13.0	1.5
1	0815	100	0.	.0	.0	1	1635	200	20.	18.5	2.1	2	0055	300	15.	12.9	1.5

PEAK FLOW	TIME		MAXIMUM AVERAGE FLOW			
			6-HR	24-HR	72-HR	24.92-HR
+ (CFS)	(HR)					
		(CFS)				
+ 20.	13.50		20.	10.	10.	10.
		(INCHES)	.180	.357	.357	.357
		(AC-FT)	10.	20.	20.	20.

PEAK STORAGE	TIME	MAXIMUM AVERAGE STORAGE			
		6-HR	24-HR	72-HR	24.92-HR
+ (AC-FT)	(HR)				
19.	15.42	18.	9.	8.	8.

PEAK STAGE	TIME	MAXIMUM AVERAGE STAGE			
		6-HR	24-HR	72-HR	24.92-HR
+ (FEET)	(HR)				
2.15	15.42	2.09	1.01	.97	.97

CUMULATIVE AREA = 1.03 SQ MI

```
             **************
             *            *
161 KK       *    ER47B   *
             *            *
             **************
                     SUB-BASIN ER47B
                     THIS SUB-BASIN SPLIT FROM OA51B TO ALLOW FOR DETENTION TO BE USED BELOW
                     THE WESTERN CANAL - ALT6A
                     24-HOUR SCS TYPE II RAINFALL WAS USED TO FIND TC & R FOR THIS BASIN
                     THIS BASIN USED RAINFALL REDUCTION FACTOR OF  .934
                       L = 1.26  Kb = .036  Adj. Slope =  254.0

              SUBBASIN RUNOFF DATA

168 BA          SUBBASIN CHARACTERISTICS
                     TAREA          .34  SUBBASIN AREA

                PRECIPITATION DATA

 32 PB               STORM         3.92  BASIN TOTAL PRECIPITATION

 32 PI            INCREMENTAL PRECIPITATION PATTERN
```

.00	.00	.00	.00	.00	.00	.00	.00	.00	.00
.00	.00	.00	.00	.00	.00	.00	.00	.00	.00
.00	.00	.00	.00	.00	.00	.00	.00	.00	.00
.00	.00	.00	.00	.00	.00	.00	.00	.00	.00
.00	.00	.00	.00	.00	.00	.00	.00	.00	.00
.00	.00	.00	.00	.00	.00	.00	.00	.00	.00
.00	.00	.00	.00	.00	.00	.00	.00	.00	.00
.00	.00	.00	.00	.00	.00	.00	.00	.00	.00
.00	.00	.00	.00	.00	.00	.00	.00	.00	.00
.00	.00	.00	.00	.00	.00	.00	.00	.00	.00
.00	.00	.00	.00	.00	.00	.00	.00	.00	.00
.00	.00	.00	.00	.00	.00	.00	.00	.00	.00
.00	.00	.00	.00	.00	.00	.00	.01	.00	.01
.01	.01	.01	.01	.01	.01	.01	.01	.03	.03
.03	.09	.09	.09	.01	.01	.01	.01	.01	.01
.01	.01	.01	.01	.01	.01	.00	.00	.00	.00
.00	.00	.00	.00	.00	.00	.00	.00	.00	.00
.00	.00	.00	.00	.00	.00	.00	.00	.00	.00
.00	.00	.00	.00	.00	.00	.00	.00	.00	.00
.00	.00	.00	.00	.00	.00	.00	.00	.00	.00
.00	.00	.00	.00	.00	.00	.00	.00	.00	.00
.00	.00	.00	.00	.00	.00	.00	.00	.00	.00
.00	.00	.00	.00	.00	.00	.00	.00	.00	.00
.00	.00	.00	.00	.00	.00	.00	.00	.00	.00
.00	.00	.00	.00	.00	.00	.00	.00	.00	.00
.00	.00	.00	.00	.00	.00	.00	.00	.00	.00
.00	.00	.00	.00	.00	.00	.00	.00	.00	.00
.00	.00	.00	.00	.00	.00	.00	.00	.00	.00
.00	.00	.00	.00	.00	.00	.00	.00		

```
169 LG          GREEN AND AMPT LOSS RATE
                     STRTL          .27  STARTING LOSS
                       DTH          .27  MOISTURE DEFICIT
                      PSIF         6.00  WETTING FRONT SUCTION
                     XKSAT          .20  HYDRAULIC CONDUCTIVITY
```

```
                    RTIMP        30.00  PERCENT IMPERVIOUS AREA

 170 UC          CLARK UNITGRAPH
                       TC          .23  TIME OF CONCENTRATION
                        R          .07  STORAGE COEFFICIENT

 171 UA          ACCUMULATED-AREA VS. TIME,  11 ORDINATES
                        .0       5.0      16.0      30.0      65.0      77.0      84.0      90.0      94.0      97.0
                     100.0

                                                          ***

                                               UNIT HYDROGRAPH PARAMETERS
                                          CLARK   TC=    .23 HR,        R=    .07 HR
                                         SNYDER   TP=    .13 HR,       CP=    .67

                                                      UNIT HYDROGRAPH
                                                 6 END-OF-PERIOD ORDINATES
              476.       992.       750.       299.       83.        23.

     ***              ***              ***              ***              ***

                         HYDROGRAPH AT STATION    ER47B

       TOTAL RAINFALL =    3.92, TOTAL LOSS =    1.85, TOTAL EXCESS =    2.07

   PEAK FLOW      TIME                          MAXIMUM AVERAGE FLOW
                                        6-HR       24-HR      72-HR      24.92-HR
 +   (CFS)        (HR)
                               (CFS)
 +     777.      12.00                   63.        19.        18.         18.
                             (INCHES)  1.722      2.063      2.064       2.064
                              (AC-FT)    31.        37.        37.         37.

                          CUMULATIVE AREA =     .34 SQ MI


*** *** *** *** *** *** *** *** *** *** *** *** *** *** *** *** *** *** *** *** *** *** *** *** *** *** *** *** *** *** *** *** ***


               **************
               *            *
 173 KK        *   ERBASN   *
               *            *
               **************
                          ***************PROPOSED BASIN BELOW ER47B**********************************
                          DETENTION BASIN AT THE ELLIOT AND 47TH AVE INTERSECTION. THE WESTERN CANAL
                          IS USED AS A COLLECTOR FACILITY AND OUTLETS TO THIS DETENTION BASIN. THE
                          BASIN HAS 10 AC TOP, 3.8 AC BOTTOM AND IS 6 FT DEEP WITH 5:1 SIDE SLOPES

 178 KO           OUTPUT CONTROL VARIABLES
                        IPRNT           1  PRINT CONTROL
                        IPLOT           0  PLOT CONTROL
                        QSCAL          0.  HYDROGRAPH PLOT SCALE

              HYDROGRAPH ROUTING DATA

 179 RS           STORAGE ROUTING
                        NSTPS           1  NUMBER OF SUBREACHES
                         ITYP        ELEV  TYPE OF INITIAL CONDITION
                       RSVRIC         .00  INITIAL CONDITION
                            X         .00 WORKING R AND D COEFFICIENT

 180 SA                  AREA        3.8       4.8       5.9       6.9       7.9       9.0      10.0

 181 SQ             DISCHARGE         0.       20.       20.       20.       20.       20.       20.

 182 SE             ELEVATION        .00      1.00      2.00      3.00      4.00      5.00      6.00
                                                          ***

                                              COMPUTED STORAGE-ELEVATION DATA

                 STORAGE       .00      4.29      9.63     16.02     23.42     31.86     41.36
               ELEVATION       .00      1.00      2.00      3.00      4.00      5.00      6.00
*******************************************************************************************************************

                                              HYDROGRAPH AT STATION    ERBASN

*******************************************************************************************************************
```

DA	MON	HRMN	ORD	OUTFLOW	STORAGE	STAGE	DA	MON	HRMN	ORD	OUTFLOW	STORAGE	STAGE	DA	MON	HRMN	ORD	OUTFLOW	STORAGE	STAGE
1		0000	1	0.	.0	.0	1		0820	101	4.	1.0	.2	1		1640	201	20.	23.4	4.0
1		0005	2	0.	.0	.0	1		0825	102	5.	1.0	.2	1		1645	202	20.	23.3	4.0
1		0010	3	0.	.0	.0	1		0830	103	5.	1.0	.2	1		1650	203	20.	23.2	4.0
1		0015	4	0.	.0	.0	1		0835	104	5.	1.0	.2	1		1655	204	20.	23.0	3.9
1		0020	5	0.	.0	.0	1		0840	105	5.	1.0	.2	1		1700	205	20.	22.9	3.9
1		0025	6	0.	.0	.0	1		0845	106	5.	1.0	.2	1		1705	206	20.	22.8	3.9
1		0030	7	0.	.1	.0	1		0850	107	5.	1.1	.2	1		1710	207	20.	22.7	3.9
1		0035	8	0.	.1	.0	1		0855	108	5.	1.1	.2	1		1715	208	20.	22.6	3.9
1		0040	9	0.	.1	.0	1		0900	109	5.	1.1	.3	1		1720	209	20.	22.5	3.9
1		0045	10	1.	.1	.0	1		0905	110	5.	1.1	.3	1		1725	210	20.	22.4	3.9

1		0050	11	1.	.1	.0	1		0910	111	5.	1.1	.3	1		1730	211	20.	22.3	3.9
1		0055	12	1.	.1	.0	1		0915	112	5.	1.1	.3	1		1735	212	20.	22.2	3.8
1		0100	13	1.	.2	.0	1		0920	113	5.	1.2	.3	1		1740	213	20.	22.1	3.8
1		0105	14	1.	.2	.0	1		0925	114	5.	1.2	.3	1		1745	214	20.	22.0	3.8
1		0110	15	1.	.2	.0	1		0930	115	6.	1.2	.3	1		1750	215	20.	21.9	3.8
1		0115	16	1.	.2	.0	1		0935	116	6.	1.2	.3	1		1755	216	20.	21.8	3.8
1		0120	17	1.	.2	.1	1		0940	117	6.	1.2	.3	1		1800	217	20.	21.7	3.8
1		0125	18	1.	.2	.1	1		0945	118	6.	1.3	.3	1		1805	218	20.	21.6	3.8
1		0130	19	1.	.3	.1	1		0950	119	6.	1.3	.3	1		1810	219	20.	21.5	3.7
1		0135	20	1.	.3	.1	1		0955	120	6.	1.3	.3	1		1815	220	20.	21.4	3.7
1		0140	21	1.	.3	.1	1		1000	121	6.	1.3	.3	1		1820	221	20.	21.3	3.7
1		0145	22	1.	.3	.1	1		1005	122	6.	1.3	.3	1		1825	222	20.	21.2	3.7
1		0150	23	1.	.3	.1	1		1010	123	6.	1.4	.3	1		1830	223	20.	21.1	3.7
1		0155	24	1.	.3	.1	1		1015	124	6.	1.4	.3	1		1835	224	20.	20.9	3.7
1		0200	25	2.	.3	.1	1		1020	125	7.	1.4	.3	1		1840	225	20.	20.8	3.7
1		0205	26	2.	.3	.1	1		1025	126	7.	1.4	.3	1		1845	226	20.	20.7	3.6
1		0210	27	2.	.3	.1	1		1030	127	7.	1.5	.3	1		1850	227	20.	20.6	3.6
1		0215	28	2.	.4	.1	1		1035	128	7.	1.5	.4	1		1855	228	20.	20.5	3.6
1		0220	29	2.	.4	.1	1		1040	129	7.	1.6	.4	1		1900	229	20.	20.4	3.6
1		0225	30	2.	.4	.1	1		1045	130	7.	1.6	.4	1		1905	230	20.	20.3	3.6
1		0230	31	2.	.4	.1	1		1050	131	8.	1.7	.4	1		1910	231	20.	20.2	3.6
1		0235	32	2.	.4	.1	1		1055	132	8.	1.7	.4	1		1915	232	20.	20.1	3.5
1		0240	33	2.	.4	.1	1		1100	133	8.	1.8	.4	1		1920	233	20.	20.0	3.5
1		0245	34	2.	.4	.1	1		1105	134	9.	1.9	.4	1		1925	234	20.	19.9	3.5
1		0250	35	2.	.4	.1	1		1110	135	9.	1.9	.4	1		1930	235	20.	19.7	3.5
1		0255	36	2.	.4	.1	1		1115	136	9.	2.0	.5	1		1935	236	20.	19.6	3.5
1		0300	37	2.	.4	.1	1		1120	137	10.	2.1	.5	1		1940	237	20.	19.5	3.5
1		0305	38	2.	.4	.1	1		1125	138	10.	2.2	.5	1		1945	238	20.	19.4	3.5
1		0310	39	2.	.4	.1	1		1130	139	11.	2.3	.5	1		1950	239	20.	19.3	3.4
1		0315	40	2.	.5	.1	1		1135	140	12.	2.5	.6	1		1955	240	20.	19.2	3.4
1		0320	41	2.	.5	.1	1		1140	141	15.	3.3	.8	1		2000	241	20.	19.1	3.4
1		0325	42	2.	.5	.1	1		1145	142	20.	4.5	1.0	1		2005	242	20.	19.0	3.4
1		0330	43	2.	.5	.1	1		1150	143	20.	6.4	1.4	1		2010	243	20.	18.8	3.4
1		0335	44	2.	.5	.1	1		1155	144	20.	9.7	2.0	1		2015	244	20.	18.7	3.4
1		0340	45	2.	.5	.1	1		1200	145	20.	14.3	2.7	1		2020	245	20.	18.6	3.4
1		0345	46	2.	.5	.1	1		1205	146	20.	19.2	3.4	1		2025	246	20.	18.5	3.3
1		0350	47	2.	.5	.1	1		1210	147	20.	22.9	3.9	1		2030	247	20.	18.4	3.3
1		0355	48	2.	.5	.1	1		1215	148	20.	24.9	4.2	1		2035	248	20.	18.3	3.3
1		0400	49	2.	.5	.1	1		1220	149	20.	25.8	4.3	1		2040	249	20.	18.1	3.3
1		0405	50	2.	.5	.1	1		1225	150	20.	26.3	4.3	1		2045	250	20.	18.0	3.3
1		0410	51	2.	.5	.1	1		1230	151	20.	26.4	4.4	1		2050	251	20.	17.9	3.3
1		0415	52	3.	.5	.1	1		1235	152	20.	26.5	4.4	1		2055	252	20.	17.8	3.2
1		0420	53	3.	.6	.1	1		1240	153	20.	26.6	4.4	1		2100	253	20.	17.7	3.2
1		0425	54	3.	.6	.1	1		1245	154	20.	26.6	4.4	1		2105	254	20.	17.6	3.2
1		0430	55	3.	.6	.1	1		1250	155	20.	26.7	4.4	1		2110	255	20.	17.4	3.2
1		0435	56	3.	.6	.1	1		1255	156	20.	26.7	4.4	1		2115	256	20.	17.3	3.2
1		0440	57	3.	.6	.1	1		1300	157	20.	26.7	4.4	1		2120	257	20.	17.2	3.2
1		0445	58	3.	.6	.1	1		1305	158	20.	26.7	4.4	1		2125	258	20.	17.1	3.1
1		0450	59	3.	.6	.1	1		1310	159	20.	26.6	4.4	1		2130	259	20.	17.0	3.1
1		0455	60	3.	.6	.1	1		1315	160	20.	26.6	4.4	1		2135	260	20.	16.9	3.1
1		0500	61	3.	.6	.1	1		1320	161	20.	26.6	4.4	1		2140	261	20.	16.7	3.1
1		0505	62	3.	.6	.1	1		1325	162	20.	26.6	4.4	1		2145	262	20.	16.6	3.1
1		0510	63	3.	.6	.2	1		1330	163	20.	26.5	4.4	1		2150	263	20.	16.5	3.1
1		0515	64	3.	.7	.2	1		1335	164	20.	26.5	4.4	1		2155	264	20.	16.4	3.1
1		0520	65	3.	.7	.2	1		1340	165	20.	26.4	4.4	1		2200	265	20.	16.3	3.0
1		0525	66	3.	.7	.2	1		1345	166	20.	26.4	4.3	1		2205	266	20.	16.2	3.0
1		0530	67	3.	.7	.2	1		1350	167	20.	26.3	4.3	1		2210	267	20.	16.1	3.0
1		0535	68	3.	.7	.2	1		1355	168	20.	26.2	4.3	1		2215	268	20.	15.9	3.0
1		0540	69	3.	.7	.2	1		1400	169	20.	26.2	4.3	1		2220	269	20.	15.8	3.0
1		0545	70	3.	.7	.2	1		1405	170	20.	26.1	4.3	1		2225	270	20.	15.7	2.9
1		0550	71	3.	.7	.2	1		1410	171	20.	26.0	4.3	1		2230	271	20.	15.6	2.9
1		0555	72	3.	.7	.2	1		1415	172	20.	26.0	4.3	1		2235	272	20.	15.5	2.9
1		0600	73	3.	.7	.2	1		1420	173	20.	25.9	4.3	1		2240	273	20.	15.4	2.9
1		0605	74	3.	.7	.2	1		1425	174	20.	25.8	4.3	1		2245	274	20.	15.2	2.9
1		0610	75	3.	.7	.2	1		1430	175	20.	25.7	4.3	1		2250	275	20.	15.1	2.9
1		0615	76	3.	.7	.2	1		1435	176	20.	25.7	4.3	1		2255	276	20.	15.0	2.8
1		0620	77	3.	.7	.2	1		1440	177	20.	25.6	4.3	1		2300	277	20.	14.9	2.8
1		0625	78	4.	.8	.2	1		1445	178	20.	25.5	4.2	1		2305	278	20.	14.8	2.8
1		0630	79	4.	.8	.2	1		1450	179	20.	25.4	4.2	1		2310	279	20.	14.7	2.8
1		0635	80	4.	.8	.2	1		1455	180	20.	25.3	4.2	1		2315	280	20.	14.5	2.8
1		0640	81	4.	.8	.2	1		1500	181	20.	25.2	4.2	1		2320	281	20.	14.4	2.7
1		0645	82	4.	.8	.2	1		1505	182	20.	25.1	4.2	1		2325	282	20.	14.3	2.7
1		0650	83	4.	.8	.2	1		1510	183	20.	25.0	4.2	1		2330	283	20.	14.2	2.7
1		0655	84	4.	.8	.2	1		1515	184	20.	25.0	4.2	1		2335	284	20.	14.1	2.7
1		0700	85	4.	.8	.2	1		1520	185	20.	24.9	4.2	1		2340	285	20.	14.0	2.7
1		0705	86	4.	.8	.2	1		1525	186	20.	24.8	4.2	1		2345	286	20.	13.8	2.7
1		0710	87	4.	.8	.2	1		1530	187	20.	24.7	4.2	1		2350	287	20.	13.7	2.6
1		0715	88	4.	.9	.2	1		1535	188	20.	24.6	4.1	1		2355	288	20.	13.6	2.6
1		0720	89	4.	.9	.2	1		1540	189	20.	24.5	4.1	2		0000	289	20.	13.5	2.6
1		0725	90	4.	.9	.2	1		1545	190	20.	24.4	4.1	2		0005	290	20.	13.4	2.6
1		0730	91	4.	.9	.2	1		1550	191	20.	24.3	4.1	2		0010	291	20.	13.2	2.6
1		0735	92	4.	.9	.2	1		1555	192	20.	24.2	4.1	2		0015	292	20.	13.1	2.5
1		0740	93	4.	.9	.2	1		1600	193	20.	24.1	4.1	2		0020	293	20.	13.0	2.5
1		0745	94	4.	.9	.2	1		1605	194	20.	24.0	4.1	2		0025	294	20.	12.8	2.5
1		0750	95	4.	.9	.2	1		1610	195	20.	23.9	4.1	2		0030	295	20.	12.7	2.5
1		0755	96	4.	.9	.2	1		1615	196	20.	23.8	4.0	2		0035	296	20.	12.5	2.5
1		0800	97	4.	.9	.2	1		1620	197	20.	23.7	4.0	2		0040	297	20.	12.4	2.4
1		0805	98	4.	.9	.2	1		1625	198	20.	23.6	4.0	2		0045	298	20.	12.3	2.4
1		0810	99	4.	.9	.2	1		1630	199	20.	23.5	4.0	2		0050	299	20.	12.1	2.4
1		0815	100	4.	.9	.2	1		1635	200	20.	23.5	4.0	2		0055	300	20.	12.0	2.4

```
*******************************************************************************************************************

   PEAK FLOW      TIME                          MAXIMUM AVERAGE FLOW
                                        6-HR       24-HR      72-HR      24.92-HR
 +   (CFS)        (HR)
```

```
                    (CFS)
+      20.     11.75                20.          13.          12.          12.
                (INCHES)           .547        1.401        1.402        1.402
                (AC-FT)             10.          25.          25.          25.

 PEAK STORAGE    TIME                        MAXIMUM AVERAGE STORAGE
                                      6-HR        24-HR        72-HR     24.92-HR
+  (AC-FT)       (HR)
       27.     12.92                25.          12.          11.          11.

  PEAK STAGE    TIME                        MAXIMUM AVERAGE STAGE
                                      6-HR        24-HR        72-HR     24.92-HR
+   (FEET)       (HR)
       4.39    13.00                4.15         2.04         1.97         1.97

                CUMULATIVE AREA =     .34 SQ MI


*** *** *** *** *** *** *** *** *** *** *** *** *** *** *** *** *** *** *** *** *** *** *** *** *** *** *** *** *** *** *** *** *** *** ***

          ***************
          *             *
183 KK    *    RER47B   *
          *             *
          ***************
                        ******************51ST AVENUE STORM DRAIN**********************************
                        ROUTE THE OUTFLOW FROM THE ELLIOT ROAD BASIN FROM ELLIOT ROAD TO DOBBINS ROAD

             HYDROGRAPH ROUTING DATA

186 RK          KINEMATIC WAVE STREAM ROUTING
                        L       7920.  CHANNEL LENGTH
                        S       .0034  SLOPE
                        N        .013  CHANNEL ROUGHNESS COEFFICIENT
                       CA         .00  CONTRIBUTING AREA
                    SHAPE        CIRC  CHANNEL SHAPE
                       WD        3.00  BOTTOM WIDTH OR DIAMETER
                        Z         .00  SIDE SLOPE
                   NDXMIN           2  MINIMUM NUMBER OF DX INTERVALS
                                                    ***
                                  COMPUTED KINEMATIC PARAMETERS
                                       VARIABLE TIME STEP
                                     (DT SHOWN IS A MINIMUM)

                    ELEMENT    ALPHA       M         DT         DX       PEAK    TIME TO      VOLUME     MAXIMUM
                                                                                    PEAK                  CELERITY
                                                     (MIN)      (FT)      (CFS)    (MIN)        (IN)       (FPS)

                    MAIN          4.33     1.25       4.64    1980.00     20.00  1499.45        1.38       7.35

CONTINUITY SUMMARY (AC-FT) - INFLOW= .2543E+02  EXCESS= .0000E+00 OUTFLOW= .2509E+02 BASIN STORAGE= .4276E+00 PERCENT ERROR=   -.3

                                  INTERPOLATED TO SPECIFIED COMPUTATION INTERVAL

                    MAIN          4.33     1.25       5.00                20.00  1495.00        1.38

      ***           ***           ***           ***           ***

                                  HYDROGRAPH AT STATION    RER47B

 PEAK FLOW     TIME                        MAXIMUM AVERAGE FLOW
                                      6-HR        24-HR        72-HR     24.92-HR
+   (CFS)       (HR)
                (CFS)
+      20.     12.08                20.          13.          12.          12.
                (INCHES)           .547        1.377        1.377        1.377
                (AC-FT)             10.          25.          25.          25.

                CUMULATIVE AREA =     .34 SQ MI


*** *** *** *** *** *** *** *** *** *** *** *** *** *** *** *** *** *** *** *** *** *** *** *** *** *** *** *** *** *** *** *** *** *** ***

          ***************
          *             *
187 KK    *     CDR51   *
          *             *
          ***************
                        COMBINE ROUTED FLOW FROM SUB-BASIN DR43C AND ER47B TO RUNOFF FROM SUB-BASIN
                        OA51B - THIS COMBINATION NOW AT DOBBINS ROAD AND 51ST AVE

190 HC          HYDROGRAPH COMBINATION
                     ICOMP           3  NUMBER OF HYDROGRAPHS TO COMBINE
                                                    ***
```



```
      ***           ***           ***           ***           ***

                                  HYDROGRAPH AT STATION    CDR51

 PEAK FLOW     TIME                        MAXIMUM AVERAGE FLOW
                                      6-HR        24-HR        72-HR     24.92-HR
+   (CFS)       (HR)
                (CFS)
+      60.     13.50                60.          33.          32.          32.
                (INCHES)           .243        .537         .537         .537
                (AC-FT)             30.          66.          66.          66.

                CUMULATIVE AREA =     2.29 SQ MI


*** *** *** *** *** *** *** *** *** *** *** *** *** *** *** *** *** *** *** *** *** *** *** *** *** *** *** *** *** *** *** *** *** *** ***

          ***************
          *             *
191 KK    *    RDR51A   *
          *             *
          ***************
                        **********************51ST AVENUE STORM DRAIN*********************************
                        ROUTE FLOWS ALONG 51ST AVE TO A BASIN NEAR 51ST AND BASLINE
                        CROSS-SECTION REVISED TO REFLECT TO USE STORM DRAIN

             HYDROGRAPH ROUTING DATA

195 RK          KINEMATIC WAVE STREAM ROUTING
                        L       1320.  CHANNEL LENGTH
                        S       .0053  SLOPE
                        N        .013  CHANNEL ROUGHNESS COEFFICIENT
                       CA         .00  CONTRIBUTING AREA
                    SHAPE        CIRC  CHANNEL SHAPE
                       WD        5.00  BOTTOM WIDTH OR DIAMETER
                        Z         .00  SIDE SLOPE
                   NDXMIN           2  MINIMUM NUMBER OF DX INTERVALS
                                                    ***
                                  COMPUTED KINEMATIC PARAMETERS
                                       VARIABLE TIME STEP
                                     (DT SHOWN IS A MINIMUM)

                    ELEMENT    ALPHA       M         DT         DX       PEAK    TIME TO      VOLUME     MAXIMUM
                                                                                    PEAK                  CELERITY
                                                     (MIN)      (FT)      (CFS)    (MIN)        (IN)       (FPS)

                    MAIN          5.89     1.25        .74    440.00     60.00   811.92         .54      11.71

CONTINUITY SUMMARY (AC-FT) - INFLOW= .6561E+02  EXCESS= .0000E+00 OUTFLOW= .6554E+02 BASIN STORAGE= .9705E-01 PERCENT ERROR=    .0

                                  INTERPOLATED TO SPECIFIED COMPUTATION INTERVAL

                    MAIN          5.89     1.25       5.00                60.00   815.00         .54

      ***           ***           ***           ***           ***

                                  HYDROGRAPH AT STATION    RDR51A

 PEAK FLOW     TIME                        MAXIMUM AVERAGE FLOW
                                      6-HR        24-HR        72-HR     24.92-HR
+   (CFS)       (HR)
                (CFS)
+      60.     13.58                60.          33.          32.          32.
                (INCHES)           .243        .536         .536         .536
                (AC-FT)             30.          65.          65.          65.

                CUMULATIVE AREA =     2.29 SQ MI


*** *** *** *** *** *** *** *** *** *** *** *** *** *** *** *** *** *** *** *** *** *** *** *** *** *** *** *** *** *** *** *** *** *** ***

          ***************
          *             *
196 KK    *     SM51C   *
          *             *
          ***************
                        SUB-BASIN SM51C
                        24-HOUR SCS TYPE II RAINFALL WAS USED TO FIND TC & R FOR THIS BASIN
                        THIS BASIN USED RAINFALL REDUCTION FACTOR OF  .934
                          L = 1.29  Kb = .045  Adj. Slope =   12.0

             SUBBASIN RUNOFF DATA

201 BA          SUBBASIN CHARACTERISTICS
                     TAREA          .51  SUBBASIN AREA
```

PRECIPITATION DATA

32 PB STORM 3.92 BASIN TOTAL PRECIPITATION

32 PI INCREMENTAL PRECIPITATION PATTERN

.00	.00	.00	.00	.00	.00	.00	.00	.00	.00
.00	.00	.00	.00	.00	.00	.00	.00	.00	.00
.00	.00	.00	.00	.00	.00	.00	.00	.00	.00
.00	.00	.00	.00	.00	.00	.00	.00	.00	.00
.00	.00	.00	.00	.00	.00	.00	.00	.00	.00
.00	.00	.00	.00	.00	.00	.00	.00	.00	.00
.00	.00	.00	.00	.00	.00	.00	.00	.00	.00
.00	.00	.00	.00	.00	.00	.00	.00	.00	.00
.00	.00	.00	.00	.00	.00	.00	.00	.00	.00
.00	.00	.00	.00	.00	.00	.00	.00	.00	.00
.00	.00	.00	.00	.00	.00	.00	.00	.00	.00
.00	.00	.00	.00	.00	.00	.00	.00	.00	.00
.00	.00	.00	.00	.00	.00	.00	.01	.00	.01
.01	.01	.01	.01	.01	.01	.01	.01	.03	.03
.03	.09	.09	.09	.01	.01	.01	.01	.01	.01
.01	.01	.01	.01	.01	.01	.00	.00	.00	.00
.00	.00	.00	.00	.00	.00	.00	.00	.00	.00
.00	.00	.00	.00	.00	.00	.00	.00	.00	.00
.00	.00	.00	.00	.00	.00	.00	.00	.00	.00
.00	.00	.00	.00	.00	.00	.00	.00	.00	.00
.00	.00	.00	.00	.00	.00	.00	.00	.00	.00
.00	.00	.00	.00	.00	.00	.00	.00	.00	.00
.00	.00	.00	.00	.00	.00	.00	.00	.00	.00
.00	.00	.00	.00	.00	.00	.00	.00	.00	.00
.00	.00	.00	.00	.00	.00	.00	.00	.00	.00
.00	.00	.00	.00	.00	.00	.00	.00	.00	.00
.00	.00	.00	.00	.00	.00	.00	.00	.00	.00
.00	.00	.00	.00	.00	.00	.00	.00	.00	.00
.00	.00	.00	.00	.00	.00	.00	.00	.00	.00

202 LG GREEN AND AMPT LOSS RATE

STRTL	.29	STARTING LOSS
DTH	.25	MOISTURE DEFICIT
PSIF	5.20	WETTING FRONT SUCTION
XKSAT	.29	HYDRAULIC CONDUCTIVITY
RTIMP	17.00	PERCENT IMPERVIOUS AREA

203 UC CLARK UNITGRAPH

TC	1.05	TIME OF CONCENTRATION
R	.70	STORAGE COEFFICIENT

204 UA ACCUMULATED-AREA VS. TIME, 11 ORDINATES

.0	5.0	16.0	30.0	65.0	77.0	84.0	90.0	94.0	97.0
100.0									

***

UNIT HYDROGRAPH PARAMETERS
CLARK TC= 1.05 HR, R= .70 HR
SNYDER TP= .58 HR, CP= .46

UNIT HYDROGRAPH
51 END-OF-PERIOD ORDINATES

9.	33.	67.	113.	194.	257.	266.	263.	255.	244.
229.	214.	199.	180.	160.	142.	126.	112.	100.	89.
79.	70.	62.	55.	49.	44.	39.	34.	31.	27.
24.	21.	19.	17.	15.	13.	12.	11.	9.	8.
7.	7.	6.	5.	5.	4.	4.	3.	3.	3.
2.									

*** *** *** *** ***

HYDROGRAPH AT STATION SM51C

TOTAL RAINFALL = 3.92, TOTAL LOSS = 2.28, TOTAL EXCESS = 1.64

	PEAK FLOW	TIME		MAXIMUM AVERAGE FLOW			
				6-HR	24-HR	72-HR	24.92-HR
+	(CFS)	(HR)					
			(CFS)				
+	327.	12.42		79.	22.	22.	22.
			(INCHES)	1.441	1.633	1.635	1.635
			(AC-FT)	39.	45.	45.	45.

CUMULATIVE AREA = .51 SQ MI

*** ***

```
            **************
            *            *
206 KK      *    SM51R   *
            *            *
            **************
```

DIVERT RETENTION VOLUME

DT DIVERSION
ISTAD RET51C DIVERSION HYDROGRAPH IDENTIFICATION

DSTRMX 23.00 MAXIMUM VOLUME TO BE DIVERTED

DI INFLOW .00 1000.00 10000.00

DQ DIVERTED FLOW .00 1000.00 10000.00

***

*** *** *** *** ***

DIVERSION HYDROGRAPH RET51C

	PEAK FLOW	TIME		MAXIMUM AVERAGE FLOW			
				6-HR	24-HR	72-HR	24.92-HR
+	(CFS)	(HR)					
			(CFS)				
+	327.	12.42		44.	12.	11.	11.
			(INCHES)	.792	.844	.844	.844
			(AC-FT)	22.	23.	23.	23.

CUMULATIVE AREA = .51 SQ MI

*** *** *** *** ***

HYDROGRAPH AT STATION SM51R

	PEAK FLOW	TIME		MAXIMUM AVERAGE FLOW			
				6-HR	24-HR	72-HR	24.92-HR
+	(CFS)	(HR)					
			(CFS)				
+	248.	12.92		40.	11.	10.	10.
			(INCHES)	.737	.791	.791	.791
			(AC-FT)	20.	22.	22.	22.

CUMULATIVE AREA = .51 SQ MI

*** ***

```
            **************
            *            *
211 KK      *    RB2591  *
            *            *
            **************
```

ROUTE FLOW FROM COMPUTATION POINT CS51C TO COMPUTATION POINT CB259C
FIRST REACH
CROSS-SECTION REVISED TO REFLECT DEVELOPED CONDITIONS

HYDROGRAPH ROUTING DATA

215 RS STORAGE ROUTING

NSTPS	3	NUMBER OF SUBREACHES
ITYP	ELEV	TYPE OF INITIAL CONDITION
RSVRIC	-1.00	INITIAL CONDITION
X	.00	WORKING R AND D COEFFICIENT

216 RC NORMAL DEPTH CHANNEL

ANL	.035	LEFT OVERBANK N-VALUE
ANCH	.035	MAIN CHANNEL N-VALUE
ANR	.035	RIGHT OVERBANK N-VALUE
RLNTH	4200.	REACH LENGTH
SEL	.0036	ENERGY SLOPE
ELMAX	.0	MAX. ELEV. FOR STORAGE/OUTFLOW CALCULATION

CROSS-SECTION DATA
--- LEFT OVERBANK --- + ------ MAIN CHANNEL ------- + --- RIGHT OVERBANK ---

218 RY	ELEVATION	1030.00	1029.00	1028.00	1025.00	1025.00	1028.00	1029.00	1030.00
217 RX	DISTANCE	.00	40.00	60.00	65.00	75.00	80.00	100.00	140.00

***

COMPUTED STORAGE-OUTFLOW-ELEVATION DATA

STORAGE	.00	.26	.55	.86	1.19	1.55	1.92	2.32	2.74	3.19
OUTFLOW	.00	2.78	8.91	17.71	28.98	42.65	58.68	77.09	97.89	121.14
ELEVATION	1025.00	1025.26	1025.53	1025.79	1026.05	1026.32	1026.58	1026.84	1027.11	1027.37
STORAGE	3.65	4.14	4.69	5.49	6.56	7.90	9.59	11.81	14.56	17.84
OUTFLOW	146.87	175.14	209.81	252.33	303.06	364.07	434.17	521.98	631.71	766.56
ELEVATION	1027.63	1027.90	1028.16	1028.42	1028.68	1028.95	1029.21	1029.47	1029.74	1030.00

*** *** *** *** ***

HYDROGRAPH AT STATION RB2591

	PEAK FLOW	TIME		MAXIMUM AVERAGE FLOW			
				6-HR	24-HR	72-HR	24.92-HR
+	(CFS)	(HR)					
			(CFS)				
+	198.	13.25		40.	11.	10.	10.
			(INCHES)	.725	.783	.783	.783

```
                    (AC-FT)      20.        21.        21.        21.

 PEAK STORAGE   TIME                    MAXIMUM AVERAGE STORAGE
                                  6-HR       24-HR      72-HR      24.92-HR
+  (AC-FT)      (HR)
       2.      13.25                0.         0.         0.         0.

  PEAK STAGE   TIME                    MAXIMUM AVERAGE STAGE
                                  6-HR       24-HR      72-HR      24.92-HR
+  (FEET)       (HR)
   1028.07     13.25            1026.03    1025.33    1025.32    1025.32

                    CUMULATIVE AREA =     .51 SQ MI


*** *** *** *** *** *** *** *** *** *** *** *** *** *** *** *** *** *** *** *** *** *** *** *** *** *** *** *** *** *** *** *** *** *** ***

          ***************
          *             *
219 KK    *    C51SM    *
          *             *
          ***************
                    COMBINE SUBARAREA SM51C WITH 51ST AVE STORM DRAIN

221 HC          HYDROGRAPH COMBINATION
                     ICOMP          2  NUMBER OF HYDROGRAPHS TO COMBINE
                                                          ***
     ***             ***             ***             ***             ***

                    HYDROGRAPH AT STATION     C51SM

  PEAK FLOW      TIME                    MAXIMUM AVERAGE FLOW
                                  6-HR       24-HR      72-HR      24.92-HR
+  (CFS)         (HR)
                  (CFS)
+     258.      13.25              100.        44.        42.        42.
                (INCHES)           .331       .581       .581       .581
                (AC-FT)             49.        87.        87.        87.

                    CUMULATIVE AREA =     2.80 SQ MI

*** *** *** *** *** *** *** *** *** *** *** *** *** *** *** *** *** *** *** *** *** *** *** *** *** *** *** *** *** *** *** *** *** *** ***

          ***************
          *             *
222 KK    *    RDR51B   *
          *             *
          ***************
                    ***********PROPOSED 51ST AVENUE STORM DRAIN**********************************
                    ROUTE FLOWS ALONG 51ST AVE TO A BASIN NEAR 51ST AND BASLINE
                    CROSS-SECTION REVISED TO REFLECT TO USE STORM DRAIN

               HYDROGRAPH ROUTING DATA

226 RK          KINEMATIC WAVE STREAM ROUTING
                         L      3960.  CHANNEL LENGTH
                         S      .0053  SLOPE
                         N       .013  CHANNEL ROUGHNESS COEFFICIENT
                        CA        .00  CONTRIBUTING AREA
                     SHAPE       TRAP  CHANNEL SHAPE
                        WD      10.00  BOTTOM WIDTH OR DIAMETER
                         Z        .00  SIDE SLOPE
                    NDXMIN          2  MINIMUM NUMBER OF DX INTERVALS
                                                          ***
                              COMPUTED KINEMATIC PARAMETERS
                                   VARIABLE TIME STEP
                                (DT SHOWN IS A MINIMUM)

                ELEMENT    ALPHA       M         DT        DX        PEAK     TIME TO      VOLUME     MAXIMUM
                                                                               PEAK                    CELERITY
                                                  (MIN)     (FT)      (CFS)    (MIN)        (IN)       (FPS)

                MAIN          1.80      1.67       1.03   1320.00     256.77   796.63        .58      21.83

CONTINUITY SUMMARY (AC-FT) - INFLOW= .8683E+02  EXCESS= .0000E+00 OUTFLOW= .8639E+02 BASIN STORAGE= .4605E+00 PERCENT ERROR=    .0

                              INTERPOLATED TO SPECIFIED COMPUTATION INTERVAL

                MAIN          1.80      1.67       5.00                253.64   795.00        .58

     ***             ***             ***             ***             ***

                    HYDROGRAPH AT STATION    RDR51B
```



```
  PEAK FLOW      TIME                    MAXIMUM AVERAGE FLOW
                                  6-HR       24-HR      72-HR      24.92-HR
+  (CFS)         (HR)
                  (CFS)
+     254.      13.25              100.        44.        42.        42.
                (INCHES)           .331       .578       .578       .578
                (AC-FT)             49.        86.        86.        86.

                    CUMULATIVE AREA =     2.80 SQ MI


*** *** *** *** *** *** *** *** *** *** *** *** *** *** *** *** *** *** *** *** *** *** *** *** *** *** *** *** *** *** *** *** *** *** ***

          ***************
          *             *
227 KK    *    BRBASN   *
          *             *
          ***************
                    ***********PROPOSED DETENTION BASIN IN SUB-BASIN BR51C**********
                    DETENTION BASIN AT THE BASELINE AND 51ST AVE INTERSECTION.

                    BASIN HAS 10 AC TOP, 7.7 AC BOTTOM AND IS 8 FT DEEP WITH 5:1 SIDE SLOPES

               HYDROGRAPH ROUTING DATA

232 RS          STORAGE ROUTING
                     NSTPS          1  NUMBER OF SUBREACHES
                     ITYP       ELEV  TYPE OF INITIAL CONDITION
                    RSVRIC       .00  INITIAL CONDITION
                         X       .00  WORKING R AND D COEFFICIENT

233 SA            AREA          7.7        8.0        8.3        8.6        8.9        9.2        9.5        9.8       10.0

234 SQ          DISCHARGE         0.        50.        50.        50.        50.        50.        50.        50.        50.

235 SE          ELEVATION        .00       1.00       2.00       3.00       4.00       5.00       6.00       7.00       8.00
                                                          ***
                                  COMPUTED STORAGE-ELEVATION DATA

                STORAGE          .00       7.85      16.00      24.45      33.20      42.25      51.60      61.25      71.15
                ELEVATION        .00       1.00       2.00       3.00       4.00       5.00       6.00       7.00       8.00

     ***             ***             ***             ***             ***

                    HYDROGRAPH AT STATION    BRBASN

  PEAK FLOW      TIME                    MAXIMUM AVERAGE FLOW
                                  6-HR       24-HR      72-HR      24.92-HR
+  (CFS)         (HR)
                  (CFS)
+      50.      13.33               50.        26.        25.        25.
                (INCHES)           .166       .350       .350       .350
                (AC-FT)             25.        52.        52.        52.

  PEAK STORAGE   TIME                    MAXIMUM AVERAGE STORAGE
                                  6-HR       24-HR      72-HR      24.92-HR
+  (AC-FT)       (HR)
       34.      24.92                32.        14.        13.        13.

  PEAK STAGE     TIME                    MAXIMUM AVERAGE STAGE
                                  6-HR       24-HR      72-HR      24.92-HR
+  (FEET)        (HR)
      4.10      24.92                3.82       1.66       1.60       1.60

                    CUMULATIVE AREA =     2.80 SQ MI


*** *** *** *** *** *** *** *** *** *** *** *** *** *** *** *** *** *** *** *** *** *** *** *** *** *** *** *** *** *** *** *** *** *** ***

          ***************
          *             *
236 KK    *    DBR51    *
          *             *
          ***************
                    ************BASLINE ROAD STORM DRAIN**************************************
                    ROUTE FLOWS WEST ALONG BASELINE TO THE LAVEEN CONVEYANCE CHANNEL
                    CROSS-SECTION REVISED TO REFLECT TO USE STORM DRAIN

               HYDROGRAPH ROUTING DATA

240 RK          KINEMATIC WAVE STREAM ROUTING
                         L      2640.  CHANNEL LENGTH
                         S      .0030  SLOPE
                         N       .013  CHANNEL ROUGHNESS COEFFICIENT
                        CA        .00  CONTRIBUTING AREA
                     SHAPE        CIRC  CHANNEL SHAPE
                        WD       4.00  BOTTOM WIDTH OR DIAMETER
```

```
                Z          .00  SIDE SLOPE
            NDXMIN           2  MINIMUM NUMBER OF DX INTERVALS

                                        ***
                        COMPUTED KINEMATIC PARAMETERS
                             VARIABLE TIME STEP
                          (DT SHOWN IS A MINIMUM)

     ELEMENT    ALPHA      M        DT        DX       PEAK    TIME TO      VOLUME    MAXIMUM
                                                              PEAK                    CELERITY
                                   (MIN)      (FT)     (CFS)    (MIN)        (IN)      (FPS)

     MAIN         4.27     1.25      1.82    880.00     50.34  1495.79         .35      8.73

 CONTINUITY SUMMARY (AC-FT) - INFLOW= .5227E+02  EXCESS= .0000E+00 OUTFLOW= .5204E+02 BASIN STORAGE= .2464E+00 PERCENT ERROR=     .0

                        INTERPOLATED TO SPECIFIED COMPUTATION INTERVAL

     MAIN         4.27     1.25      5.00               50.19  1495.00         .35

   ***          ***          ***          ***          ***

                        HYDROGRAPH AT STATION    DBR51

  PEAK FLOW     TIME                          MAXIMUM AVERAGE FLOW
                                    6-HR        24-HR        72-HR       24.92-HR
+   (CFS)       (HR)
                (CFS)
+     50.      24.92                50.          26.          25.          25.
                (INCHES)           .166         .348         .348         .348
                (AC-FT)             25.          52.          52.          52.

                CUMULATIVE AREA =    2.80 SQ MI


*** *** *** *** *** *** *** *** *** *** *** *** *** *** *** *** *** *** *** *** *** *** *** *** *** *** *** *** *** *** *** *** *** *** ***


          **************
          *            *
241 KK    *    CB51D   *
          *            *
          **************
                        COMBINE ROUTED FLOW FROM COMPUTATION POINT CB51C AND FLOWS FROM 51ST
                        AVENUE STORM DRAIN PROPOSED BY THE LAVEEN ADMP

244 HC          HYDROGRAPH COMBINATION
                     ICOMP           2  NUMBER OF HYDROGRAPHS TO COMBINE

                                                ***

   ***          ***          ***          ***          ***

                        HYDROGRAPH AT STATION    CB51D

  PEAK FLOW     TIME                          MAXIMUM AVERAGE FLOW
                                    6-HR        24-HR        72-HR       24.92-HR
+   (CFS)       (HR)
                (CFS)
+     328.     13.58                142.          54.          52.          52.
                (INCHES)           .284         .431         .431         .431
                (AC-FT)             71.         107.         107.         107.

                CUMULATIVE AREA =    4.66 SQ MI


*** *** *** *** *** *** *** *** *** *** *** *** *** *** *** *** *** *** *** *** *** *** *** *** *** *** *** *** *** *** *** *** *** *** ***


          **************
          *            *
245 KK    *    RB1591  *
          *            *
          **************
                        ROUTE FLOW FROM COMPUTATION POINT CB51C TO COMPUTATION POINT CB159C
                        MARICOPA DRAIN FROM 51ST AVE TO 59TH AVE.

                HYDROGRAPH ROUTING DATA

248 RS          STORAGE ROUTING
                     NSTPS           3  NUMBER OF SUBREACHES
                      ITYP        ELEV  TYPE OF INITIAL CONDITION
                    RSVRIC       -1.00  INITIAL CONDITION
                         X         .00 WORKING R AND D COEFFICIENT

249 RC          NORMAL DEPTH CHANNEL
                       ANL        .030  LEFT OVERBANK N-VALUE
                      ANCH        .030  MAIN CHANNEL N-VALUE
                       ANR        .030  RIGHT OVERBANK N-VALUE
```



```
                    RLNTH       5200.  REACH LENGTH
                      SEL       .0011  ENERGY SLOPE
                     ELMAX          .0  MAX. ELEV. FOR STORAGE/OUTFLOW CALCULATION

                                CROSS-SECTION DATA
                        --- LEFT OVERBANK --- + ------ MAIN CHANNEL ------- + --- RIGHT OVERBANK ---
251 RY      ELEVATION   1000.20   1000.10   1000.00    995.00    995.00   1000.00   1000.10   1000.20
250 RX      DISTANCE        .00     10.00     20.00     45.00    125.00    150.00    160.00    170.00

                                        ***

                        COMPUTED STORAGE-OUTFLOW-ELEVATION DATA

          STORAGE        .00      2.66      5.41      8.24     11.17     14.19     17.29     20.49     23.77     27.14
          OUTFLOW        .00     15.29     48.80     96.50    156.83    228.94    312.27    406.46    511.26    626.49
        ELEVATION     995.00    995.27    995.55    995.82    996.09    996.37    996.64    996.92    997.19    997.46

          STORAGE      30.61     34.16     37.80     41.53     45.35     49.26     53.26     57.35     61.53     66.25
          OUTFLOW     752.04    887.83   1033.83   1190.01   1356.39   1532.97   1719.81   1916.93   2124.40   2366.50
        ELEVATION     997.74    998.01    998.28    998.56    998.83    999.11    999.38    999.65    999.93   1000.20

   ***          ***          ***          ***          ***

                        HYDROGRAPH AT STATION    RB1591

  PEAK FLOW     TIME                          MAXIMUM AVERAGE FLOW
                                    6-HR        24-HR        72-HR       24.92-HR
+   (CFS)       (HR)
                (CFS)
+     220.     14.33                137.          51.          49.          49.
                (INCHES)           .274         .405         .405         .405
                (AC-FT)             68.         101.         101.         101.

  PEAK STORAGE  TIME                          MAXIMUM AVERAGE STORAGE
                                    6-HR        24-HR        72-HR       24.92-HR
+   (AC-FT)     (HR)
               5.     14.33                3.           1.           1.           1.

  PEAK STAGE    TIME                          MAXIMUM AVERAGE STAGE
                                    6-HR        24-HR        72-HR       24.92-HR
+   (FEET)      (HR)
              996.33   14.33           995.99       995.41       995.40       995.40

                CUMULATIVE AREA =    4.66 SQ MI


*** *** *** *** *** *** *** *** *** *** *** *** *** *** *** *** *** *** *** *** *** *** *** *** *** *** *** *** *** *** *** *** *** *** ***


          **************
          *            *
252 KK    *   AVR55C   *
          *            *
          **************
                        SUB-BASIN AVR55C
                        24-HOUR SCS TYPE II RAINFALL WAS USED TO FIND TC & R FOR THIS BASIN
                        THIS BASIN USED RAINFALL REDUCTION FACTOR OF  .934
                          L =  .93  Kb = .051  Adj. Slope =    5.0

                SUBBASIN RUNOFF DATA

257 BA          SUBBASIN CHARACTERISTICS
                     TAREA         .24  SUBBASIN AREA

                PRECIPITATION DATA

32 PB                STORM        3.92  BASIN TOTAL PRECIPITATION

32 PI           INCREMENTAL PRECIPITATION PATTERN
                    .00       .00       .00       .00       .00       .00       .00       .00       .00       .00
                    .00       .00       .00       .00       .00       .00       .00       .00       .00       .00
                    .00       .00       .00       .00       .00       .00       .00       .00       .00       .00
                    .00       .00       .00       .00       .00       .00       .00       .00       .00       .00
                    .00       .00       .00       .00       .00       .00       .00       .00       .00       .00
                    .00       .00       .00       .00       .00       .00       .00       .00       .00       .00
                    .00       .00       .00       .00       .00       .00       .00       .00       .00       .00
                    .00       .00       .00       .00       .00       .00       .00       .00       .00       .00
                    .00       .00       .00       .00       .00       .00       .00       .00       .00       .00
                    .00       .00       .00       .00       .00       .00       .00       .00       .00       .00
                    .00       .00       .00       .00       .00       .00       .00       .00       .00       .00
                    .00       .00       .00       .00       .00       .00       .00       .00       .00       .00
                    .00       .00       .00       .00       .00       .00       .00       .00       .01       .00
                    .01       .01       .01       .01       .01       .01       .01       .01       .03       .03
                    .03       .09       .09       .09       .01       .01       .01       .01       .01       .01
                    .01       .01       .01       .01       .01       .01       .00       .00       .00       .00
                    .00       .00       .00       .00       .00       .00       .00       .00       .00       .00
                    .00       .00       .00       .00       .00       .00       .00       .00       .00       .00
                    .00       .00       .00       .00       .00       .00       .00       .00       .00       .00
                    .00       .00       .00       .00       .00       .00       .00       .00       .00       .00
                    .00       .00       .00       .00       .00       .00       .00       .00       .00       .00
                    .00       .00       .00       .00       .00       .00       .00       .00       .00       .00
                    .00       .00       .00       .00       .00       .00       .00       .00       .00       .00
                    .00       .00       .00       .00       .00       .00       .00       .00       .00       .00
```

```
                .00     .00     .00     .00     .00     .00     .00     .00     .00     .00
                .00     .00     .00     .00     .00     .00     .00     .00     .00     .00
                .00     .00     .00     .00     .00     .00     .00     .00     .00     .00
                .00     .00     .00     .00     .00     .00     .00     .00     .00     .00
                .00     .00     .00     .00     .00     .00     .00     .00

258 LG          GREEN AND AMPT LOSS RATE
                      STRTL      .25  STARTING LOSS
                        DTH      .15  MOISTURE DEFICIT
                       PSIF     8.00  WETTING FRONT SUCTION
                      XKSAT      .10  HYDRAULIC CONDUCTIVITY
                      RTIMP    29.00  PERCENT IMPERVIOUS AREA

259 UC          CLARK UNITGRAPH
                        TC     1.21  TIME OF CONCENTRATION
                         R      .97  STORAGE COEFFICIENT

260 UA          ACCUMULATED-AREA VS. TIME,  11 ORDINATES
                     .0     5.0    16.0    30.0    65.0    77.0    84.0    90.0    94.0    97.0
                   100.0

                                                  ***

                                          UNIT HYDROGRAPH PARAMETERS
                                    CLARK   TC=  1.21 HR,       R=   .97 HR
                                   SNYDER   TP=   .68 HR,      CP=   .41

                                          UNIT HYDROGRAPH
                                    68 END-OF-PERIOD ORDINATES
                    3.      9.     19.     31.     50.     77.     93.     96.     96.     95.
                   92.     89.     85.     81.     77.     72.     66.     60.     55.     51.
                   47.     43.     39.     36.     33.     30.     28.     26.     24.     22.
                   20.     18.     17.     15.     14.     13.     12.     11.     10.      9.
                    8.      8.      7.      7.      6.      5.      5.      5.      4.      4.
                    4.      3.      3.      3.      3.      2.      2.      2.      2.      2.
                    2.      1.      1.      1.      1.      1.      1.      1.

      ***             ***             ***             ***             ***

                          HYDROGRAPH AT STATION   AVR55C

      TOTAL RAINFALL =    3.92, TOTAL LOSS =    1.61, TOTAL EXCESS =    2.32

    PEAK FLOW     TIME                          MAXIMUM AVERAGE FLOW
                                          6-HR       24-HR       72-HR      24.92-HR
+     (CFS)       (HR)
                          (CFS)
+       152.     12.58                     51.         15.         14.         14.
                          (INCHES)       1.958       2.297       2.298       2.298
                          (AC-FT)          25.         30.         30.         30.

                          CUMULATIVE AREA =     .24 SQ MI


*** *** *** *** *** *** *** *** *** *** *** *** *** *** *** *** *** *** *** *** *** *** *** *** *** *** *** *** *** *** *** *** *** *** ***

              ************
              *          *
  262 KK      *   AVR55R *
              *          *
              ************
                          DIVERT RETENTION VOLUME

       DT          DIVERSION
                        ISTAD      RET55C  DIVERSION HYDROGRAPH IDENTIFICATION
                       DSTRMX       25.60  MAXIMUM VOLUME TO BE DIVERTED

       DI             INFLOW         .00   1000.00  10000.00

       DQ       DIVERTED FLOW        .00   1000.00  10000.00

                                                                  ***

        ***             ***             ***             ***             ***

                          DIVERSION HYDROGRAPH   RET55C

    PEAK FLOW     TIME                          MAXIMUM AVERAGE FLOW
                                          6-HR       24-HR       72-HR      24.92-HR
+     (CFS)       (HR)
                          (CFS)
+       152.     12.58                     48.         13.         12.         12.
                          (INCHES)       1.860       1.992       1.992       1.992
                          (AC-FT)          24.         26.         26.         26.

                          CUMULATIVE AREA =     .24 SQ MI

        ***             ***             ***             ***             ***

                          HYDROGRAPH AT STATION   AVR55R

    PEAK FLOW     TIME                          MAXIMUM AVERAGE FLOW
```



```
                                          6-HR       24-HR       72-HR      24.92-HR
+     (CFS)       (HR)
                          (CFS)
+       23.      15.17                     7.          2.          2.          2.
                          (INCHES)       .254        .306        .306        .306
                          (AC-FT)          3.          4.          4.          4.

                          CUMULATIVE AREA =     .24 SQ MI


*** *** *** *** *** *** *** *** *** *** *** *** *** *** *** *** *** *** *** *** *** *** *** *** *** *** *** *** *** *** *** *** *** *** ***

              ************
              *          *
  267 KK      *  RB1592  *
              *          *
              ************
                          ROUTE FLOW FROM SUBASIN AVR55C TO COMPUTATION POINT CB159C
                          ROUTING REVISED TO REFLECT URBANIZED CONDITIONS

                      HYDROGRAPH ROUTING DATA

  270 RS          STORAGE ROUTING
                        NSTPS         3  NUMBER OF SUBREACHES
                        ITYP      ELEV  TYPE OF INITIAL CONDITION
                       RSVRIC     -1.00  INITIAL CONDITION
                            X       .00 WORKING R AND D COEFFICIENT

  271 RC          NORMAL DEPTH CHANNEL
                         ANL      .035  LEFT OVERBANK N-VALUE
                        ANCH      .035  MAIN CHANNEL N-VALUE
                         ANR      .035  RIGHT OVERBANK N-VALUE
                       RLNTH     3600.  REACH LENGTH
                         SEL     .0010  ENERGY SLOPE
                       ELMAX        .0  MAX. ELEV. FOR STORAGE/OUTFLOW CALCULATION

                                CROSS-SECTION DATA
                          --- LEFT OVERBANK --- + ------ MAIN CHANNEL ------- + --- RIGHT OVERBANK ---
  273 RY       ELEVATION  1004.00  1003.00  1002.00   999.00   999.00  1002.00  1003.00  1004.00
  272 RX       DISTANCE       .00    20.00    40.00    46.00    56.00    62.00    82.00   102.00

                                                  ***

                                COMPUTED STORAGE-OUTFLOW-ELEVATION DATA

       STORAGE       .00      .23      .48      .76     1.05     1.37     1.72     2.08     2.47     2.88
       OUTFLOW       .00     1.47     4.74     9.48    15.59    23.06    31.90    42.11    53.74    66.81
     ELEVATION    999.00   999.26   999.53   999.79  1000.05  1000.32  1000.58  1000.84  1001.11  1001.37

       STORAGE      3.32     3.78     4.30     5.03     5.99     7.17     8.59    10.24    12.11    14.22
       OUTFLOW     81.36    97.43   117.30   141.65   170.49   204.92   245.87   294.20   350.69   416.13
     ELEVATION   1001.63  1001.90  1002.16  1002.42  1002.68  1002.95  1003.21  1003.47  1003.74  1004.00

        ***             ***             ***             ***             ***

                          HYDROGRAPH AT STATION   RB1592

    PEAK FLOW     TIME                          MAXIMUM AVERAGE FLOW
                                          6-HR       24-HR       72-HR      24.92-HR
+     (CFS)       (HR)
                          (CFS)
+       13.      16.25                     6.          2.          2.          2.
                          (INCHES)       .236        .286        .286        .286
                          (AC-FT)          3.          4.          4.          4.

   PEAK STORAGE   TIME                          MAXIMUM AVERAGE STORAGE
                                          6-HR       24-HR       72-HR      24.92-HR
+    (AC-FT)       (HR)
                                            0.          0.          0.          0.
        0.      16.17

    PEAK STAGE    TIME                          MAXIMUM AVERAGE STAGE
                                          6-HR       24-HR       72-HR      24.92-HR
+     (FEET)      (HR)
                                       999.58      999.19      999.18      999.18
      999.96    16.25

                          CUMULATIVE AREA =     .24 SQ MI


*** *** *** *** *** *** *** *** *** *** *** *** *** *** *** *** *** *** *** *** *** *** *** *** *** *** *** *** *** *** *** *** *** *** ***

              ************
              *          *
  274 KK      *   BR159C *
              *          *
              ************
                          SUB-BASIN BR159C
                          24-HOUR SCS TYPE II RAINFALL WAS USED TO FIND TC & R FOR THIS BASIN
                          THIS BASIN USED RAINFALL REDUCTION FACTOR OF  .934
                            L = 1.68  Kb = .054  Adj. Slope =    8.0
```

```
            SUBBASIN RUNOFF DATA

 279 BA       SUBBASIN CHARACTERISTICS
                   TAREA         .68  SUBBASIN AREA

              PRECIPITATION DATA

  32 PB            STORM        3.92  BASIN TOTAL PRECIPITATION

  32 PI         INCREMENTAL PRECIPITATION PATTERN
                  .00      .00      .00      .00      .00      .00      .00      .00      .00      .00
                  .00      .00      .00      .00      .00      .00      .00      .00      .00      .00
                  .00      .00      .00      .00      .00      .00      .00      .00      .00      .00
                  .00      .00      .00      .00      .00      .00      .00      .00      .00      .00
                  .00      .00      .00      .00      .00      .00      .00      .00      .00      .00
                  .00      .00      .00      .00      .00      .00      .00      .00      .00      .00
                  .00      .00      .00      .00      .00      .00      .00      .00      .00      .00
                  .00      .00      .00      .00      .00      .00      .00      .00      .00      .00
                  .00      .00      .00      .00      .00      .00      .00      .00      .00      .00
                  .00      .00      .00      .00      .00      .00      .00      .00      .00      .00
                  .00      .00      .00      .00      .00      .00      .00      .00      .00      .00
                  .00      .00      .00      .00      .00      .00      .00      .00      .00      .00
                  .00      .00      .00      .00      .00      .00      .00      .01      .00      .01
                  .01      .01      .01      .01      .01      .01      .01      .01      .03      .03
                  .03      .09      .09      .09      .01      .01      .01      .01      .01      .01
                  .01      .01      .01      .01      .01      .01      .00      .00      .00      .00
                  .00      .00      .00      .00      .00      .00      .00      .00      .00      .00
                  .00      .00      .00      .00      .00      .00      .00      .00      .00      .00
                  .00      .00      .00      .00      .00      .00      .00      .00      .00      .00
                  .00      .00      .00      .00      .00      .00      .00      .00      .00      .00
                  .00      .00      .00      .00      .00      .00      .00      .00      .00      .00
                  .00      .00      .00      .00      .00      .00      .00      .00      .00      .00
                  .00      .00      .00      .00      .00      .00      .00      .00      .00      .00
                  .00      .00      .00      .00      .00      .00      .00      .00      .00      .00
                  .00      .00      .00      .00      .00      .00      .00      .00      .00      .00
                  .00      .00      .00      .00      .00      .00      .00      .00      .00      .00
                  .00      .00      .00      .00      .00      .00      .00      .00      .00      .00
                  .00      .00      .00      .00      .00      .00      .00      .00      .00      .00
                  .00      .00      .00      .00      .00      .00      .00      .00

 280 LG       GREEN AND AMPT LOSS RATE
                   STRTL         .17  STARTING LOSS
                     DTH         .25  MOISTURE DEFICIT
                    PSIF        4.80  WETTING FRONT SUCTION
                   XKSAT         .42  HYDRAULIC CONDUCTIVITY
                   RTIMP       28.00  PERCENT IMPERVIOUS AREA

 281 UC       CLARK UNITGRAPH
                      TC        1.50  TIME OF CONCENTRATION
                       R        1.10  STORAGE COEFFICIENT

 282 UA       ACCUMULATED-AREA VS. TIME,  11 ORDINATES
                   .0       5.0     16.0     30.0     65.0     77.0     84.0     90.0     94.0     97.0
                100.0

                                                  ***

                                       UNIT HYDROGRAPH PARAMETERS
                                  CLARK   TC=  1.50 HR,        R=  1.10 HR
                                 SNYDER   TP=   .82 HR,       CP=   .43

                                             UNIT HYDROGRAPH
                                       78 END-OF-PERIOD ORDINATES
               5.       17.      34.      56.      80.     117.     174.     216.     230.     234.
             231.      228.     223.     217.     209.     200.     192.     184.     174.     161.
             149.      139.     128.     119.     110.     102.      95.      88.      82.      76.
              70.       65.      60.      56.      52.      48.      44.      41.      38.      35.
              33.       30.      28.      26.      24.      22.      21.      19.      18.      17.
              15.       14.      13.      12.      11.      11.      10.       9.       8.       8.
               7.        7.       6.       6.       5.       5.       5.       4.       4.       4.
               3.        3.       3.       3.       2.       2.       2.       2.

      ***           ***           ***           ***           ***

                    HYDROGRAPH AT STATION   BR159C

   TOTAL RAINFALL =     3.92, TOTAL LOSS =     2.06, TOTAL EXCESS =     1.86

   PEAK FLOW      TIME                        MAXIMUM AVERAGE FLOW
                                     6-HR       24-HR       72-HR     24.92-HR
 +   (CFS)        (HR)
                               (CFS)
 +     300.      12.67                 110.        33.         32.         32.
                            (INCHES)  1.511       1.843       1.844       1.844
                             (AC-FT)    54.         66.         66.         66.

                             CUMULATIVE AREA =      .68 SQ MI


*** *** *** *** *** *** *** *** *** *** *** *** *** *** *** *** *** *** *** *** *** *** *** *** *** *** *** *** *** *** *** *** *** ***

          **************
```



```
              *             *
 284 KK       *    BR159R   *
              *             *
              ***************
                           DIVERT RETENTION VOLUME
                           RELAXED RETENTION VOLUME FROM 43.2 AC-FT

     DT             DIVERSION
                         ISTAD       RET159  DIVERSION HYDROGRAPH IDENTIFICATION
                        DSTRMX        39.50  MAXIMUM VOLUME TO BE DIVERTED

     DI                 INFLOW          .00   1000.00  10000.00

     DQ        DIVERTED FLOW            .00   1000.00  10000.00
                                                                ***

      ***           ***           ***           ***           ***

                        DIVERSION HYDROGRAPH    RET159

   PEAK FLOW      TIME                        MAXIMUM AVERAGE FLOW
                                     6-HR       24-HR       72-HR     24.92-HR
 +   (CFS)        (HR)
                               (CFS)
 +     300.      12.67                  73.         20.         19.         19.
                            (INCHES)  1.008       1.097       1.097       1.097
                             (AC-FT)    36.         40.         40.         40.

                             CUMULATIVE AREA =      .68 SQ MI


      ***           ***           ***           ***           ***

                        HYDROGRAPH AT STATION   BR159R

   PEAK FLOW      TIME                        MAXIMUM AVERAGE FLOW
                                     6-HR       24-HR       72-HR     24.92-HR
 +   (CFS)        (HR)
                               (CFS)
 +     193.      13.67                  48.         14.         13.         13.
                            (INCHES)   .666        .746        .746        .746
                             (AC-FT)    24.         27.         27.         27.

                             CUMULATIVE AREA =      .68 SQ MI


*** *** *** *** *** *** *** *** *** *** *** *** *** *** *** *** *** *** *** *** *** *** *** *** *** *** *** *** *** *** *** *** *** ***


              ***************
              *             *
 290 KK       *    VR59C    *
              *             *
              ***************
                           SUB-BASIN VR59C
                           24-HOUR SCS TYPE II RAINFALL WAS USED TO FIND TC & R FOR THIS BASIN
                           THIS BASIN USED RAINFALL REDUCTION FACTOR OF   .934
                             L =  .75  Kb = .083  Adj. Slope =     4.0

            SUBBASIN RUNOFF DATA

 295 BA       SUBBASIN CHARACTERISTICS
                   TAREA         .23  SUBBASIN AREA

              PRECIPITATION DATA

  32 PB            STORM        3.92  BASIN TOTAL PRECIPITATION

  32 PI         INCREMENTAL PRECIPITATION PATTERN
                  .00      .00      .00      .00      .00      .00      .00      .00      .00      .00
                  .00      .00      .00      .00      .00      .00      .00      .00      .00      .00
                  .00      .00      .00      .00      .00      .00      .00      .00      .00      .00
                  .00      .00      .00      .00      .00      .00      .00      .00      .00      .00
                  .00      .00      .00      .00      .00      .00      .00      .00      .00      .00
                  .00      .00      .00      .00      .00      .00      .00      .00      .00      .00
                  .00      .00      .00      .00      .00      .00      .00      .00      .00      .00
                  .00      .00      .00      .00      .00      .00      .00      .00      .00      .00
                  .00      .00      .00      .00      .00      .00      .00      .00      .00      .00
                  .00      .00      .00      .00      .00      .00      .00      .00      .00      .00
                  .00      .00      .00      .00      .00      .00      .00      .00      .00      .00
                  .00      .00      .00      .00      .00      .00      .00      .00      .00      .00
                  .00      .00      .00      .00      .00      .00      .00      .01      .00      .01
                  .01      .01      .01      .01      .01      .01      .01      .01      .03      .03
                  .03      .09      .09      .09      .01      .01      .01      .01      .01      .01
                  .01      .01      .01      .01      .01      .01      .00      .00      .00      .00
                  .00      .00      .00      .00      .00      .00      .00      .00      .00      .00
                  .00      .00      .00      .00      .00      .00      .00      .00      .00      .00
                  .00      .00      .00      .00      .00      .00      .00      .00      .00      .00
                  .00      .00      .00      .00      .00      .00      .00      .00      .00      .00
                  .00      .00      .00      .00      .00      .00      .00      .00      .00      .00
                  .00      .00      .00      .00      .00      .00      .00      .00      .00      .00
                  .00      .00      .00      .00      .00      .00      .00      .00      .00      .00
                  .00      .00      .00      .00      .00      .00      .00      .00      .00      .00
```

```
                .00     .00     .00     .00     .00     .00     .00     .00     .00     .00
                .00     .00     .00     .00     .00     .00     .00     .00     .00     .00
                .00     .00     .00     .00     .00     .00     .00     .00     .00     .00
                .00     .00     .00     .00     .00     .00     .00     .00     .00     .00
                .00     .00     .00     .00     .00     .00     .00     .00

296 LG      GREEN AND AMPT LOSS RATE
              STRTL      .13  STARTING LOSS
               DTH       .15  MOISTURE DEFICIT
              PSIF      7.00  WETTING FRONT SUCTION
             XKSAT       .18  HYDRAULIC CONDUCTIVITY
             RTIMP      9.00  PERCENT IMPERVIOUS AREA

297 UC      CLARK UNITGRAPH
               TC      1.50  TIME OF CONCENTRATION
                R      1.06  STORAGE COEFFICIENT

298 UA      ACCUMULATED-AREA VS. TIME,  11 ORDINATES
              .0     5.0    16.0    30.0    65.0    77.0    84.0    90.0    94.0    97.0
            100.0

                                        ***

                                UNIT HYDROGRAPH PARAMETERS
                          CLARK   TC=  1.50 HR,       R=  1.06 HR
                         SNYDER   TP=   .81 HR,      CP=   .44

                                  UNIT HYDROGRAPH
                            75 END-OF-PERIOD ORDINATES
            2.      6.     12.     20.     28.     42.     62.     77.     82.     83.
           82.     81.     79.     76.     73.     70.     67.     64.     61.     56.
           52.     48.     44.     41.     38.     35.     32.     30.     28.     25.
           24.     22.     20.     19.     17.     16.     15.     14.     13.     12.
           11.     10.      9.      8.      8.      7.      7.      6.      6.      5.
            5.      4.      4.      4.      4.      3.      3.      3.      3.      2.
            2.      2.      2.      2.      2.      1.      1.      1.      1.      1.
            1.      1.      1.      1.      1.

   ***          ***          ***          ***          ***

                        HYDROGRAPH AT STATION    VR59C

     TOTAL RAINFALL =    3.92, TOTAL LOSS =    2.26, TOTAL EXCESS =    1.67

  PEAK FLOW     TIME                      MAXIMUM AVERAGE FLOW
                                    6-HR       24-HR       72-HR      24.92-HR
+   (CFS)       (HR)
                              (CFS)
+    117.     12.75             39.         10.         10.         10.
                         (INCHES)      1.545       1.656       1.656       1.656
                          (AC-FT)        19.         21.         21.         21.

                         CUMULATIVE AREA =     .23 SQ MI


*** *** *** *** *** *** *** *** *** *** *** *** *** *** *** *** *** *** *** *** *** *** *** *** *** *** *** *** *** *** *** *** *** *** ***


          ************
          *          *
300 KK    *   RB1593 *
          *          *
          ************
                        ROUTE FLOW FROM SUB-BASIN VR59C TO COMPUTATION POINT CB159C
                        ROUTING REVISED TO REFLECT URBANIZED CONDITIONS

                    HYDROGRAPH ROUTING DATA

303 RS                STORAGE ROUTING
                         NSTPS         3  NUMBER OF SUBREACHES
                          ITYP      ELEV  TYPE OF INITIAL CONDITION
                         RSVRIC     -1.00  INITIAL CONDITION
                             X       .00 WORKING R AND D COEFFICIENT

304 RC                NORMAL DEPTH CHANNEL
                          ANL       .035  LEFT OVERBANK N-VALUE
                         ANCH       .035  MAIN CHANNEL N-VALUE
                          ANR       .035  RIGHT OVERBANK N-VALUE
                         RLNTH     3000.  REACH LENGTH
                          SEL      .0015  ENERGY SLOPE
                         ELMAX        .0  MAX. ELEV. FOR STORAGE/OUTFLOW CALCULATION

                                  CROSS-SECTION DATA
                           --- LEFT OVERBANK --- + ------ MAIN CHANNEL ------- + --- RIGHT OVERBANK ---
306 RY      ELEVATION   1002.00   1001.30   1001.00    998.00    998.00   1001.00   1001.30   1002.00
305 RX      DISTANCE        .00     20.00     40.00     46.00     56.00     62.00     82.00    102.00

                                        ***

                                COMPUTED STORAGE-OUTFLOW-ELEVATION DATA

          STORAGE        .00       .15       .31       .49       .68       .88      1.09      1.31      1.55      1.80
          OUTFLOW        .00      1.24      3.98      7.92     12.97     19.09     26.28     34.53     43.85     54.27
        ELEVATION     998.00    998.21    998.42    998.63    998.84    999.05    999.26    999.47    999.68    999.89
```



```
          STORAGE      2.06      2.33      2.62      2.92      3.23      3.66      4.47      5.52      6.73      8.12
          OUTFLOW     65.80     78.45     92.27    107.26    123.45    143.96    170.63    204.76    246.25    295.71
        ELEVATION   1000.11   1000.32   1000.53   1000.74   1000.95   1001.16   1001.37   1001.58   1001.79   1002.00

   ***          ***          ***          ***          ***

                        HYDROGRAPH AT STATION    RB1593

  PEAK FLOW     TIME                      MAXIMUM AVERAGE FLOW
                                    6-HR       24-HR       72-HR      24.92-HR
+   (CFS)       (HR)
                              (CFS)
+    114.     13.00             39.         10.         10.         10.
                         (INCHES)      1.541       1.650       1.650       1.650
                          (AC-FT)        19.         21.         21.         21.

  PEAK STORAGE  TIME                      MAXIMUM AVERAGE STORAGE
                                    6-HR       24-HR       72-HR      24.92-HR
+ (AC-FT)       (HR)
      1.     13.00              0.          0.          0.          0.

  PEAK STAGE    TIME                      MAXIMUM AVERAGE STAGE
                                    6-HR       24-HR       72-HR      24.92-HR
+   (FEET)      (HR)
   1000.83     13.00          999.37      998.45      998.43      998.43

                         CUMULATIVE AREA =     .23 SQ MI


*** *** *** *** *** *** *** *** *** *** *** *** *** *** *** *** *** *** *** *** *** *** *** *** *** *** *** *** *** *** *** *** *** *** ***


          ************
          *          *
307 KK    *   CB159N *
          *          *
          ************
                        COMBINE ROUTED FLOWS FROM COMPUTATION POINT CB51C AND SUB-BASINS AVR51C
                        AND VR59C WITH RUNOFF FROM SUB-BASIN BR159C
                        CP (NORTH FLOWS) AT 59TH AVE AND BASELINE RD.

311 HC                HYDROGRAPH COMBINATION
                         ICOMP         4  NUMBER OF HYDROGRAPHS TO COMBINE

                                        ***

   ***          ***          ***          ***          ***

                        HYDROGRAPH AT STATION    CB159N

  PEAK FLOW     TIME                      MAXIMUM AVERAGE FLOW
                                    6-HR       24-HR       72-HR      24.92-HR
+   (CFS)       (HR)
                              (CFS)
+    401.     14.17            212.         76.         74.         74.
                         (INCHES)       .339       .490       .490       .490
                          (AC-FT)       105.        152.        152.        152.

                         CUMULATIVE AREA =    5.81 SQ MI


*** *** *** *** *** *** *** *** *** *** *** *** *** *** *** *** *** *** *** *** *** *** *** *** *** *** *** *** *** *** *** *** *** *** ***


          ************
          *          *
312 KK    *   ER55B  *
          *          *
          ************
                        SUB-BASIN ER55B
                        24-HOUR SCS TYPE II RAINFALL WAS USED TO FIND TC & R FOR THIS BASIN
                        THIS BASIN USED RAINFALL REDUCTION FACTOR OF  .934
                          L =  .79  Kb = .050  Adj. Slope =    8.0

                    SUBBASIN RUNOFF DATA

317 BA                SUBBASIN CHARACTERISTICS
                         TAREA       .26  SUBBASIN AREA

                    PRECIPITATION DATA

 32 PB                     STORM      3.92  BASIN TOTAL PRECIPITATION

 32 PI                INCREMENTAL PRECIPITATION PATTERN
                        .00     .00     .00     .00     .00     .00     .00     .00     .00     .00
                        .00     .00     .00     .00     .00     .00     .00     .00     .00     .00
                        .00     .00     .00     .00     .00     .00     .00     .00     .00     .00
                        .00     .00     .00     .00     .00     .00     .00     .00     .00     .00
                        .00     .00     .00     .00     .00     .00     .00     .00     .00     .00
                        .00     .00     .00     .00     .00     .00     .00     .00     .00     .00
```

```
      .00      .00      .00      .00      .00      .00      .00      .00      .00      .00
      .00      .00      .00      .00      .00      .00      .00      .00      .00      .00
      .00      .00      .00      .00      .00      .00      .00      .00      .00      .00
      .00      .00      .00      .00      .00      .00      .00      .00      .00      .00
      .00      .00      .00      .00      .00      .00      .00      .00      .00      .00
      .00      .00      .00      .00      .00      .00      .00      .00      .00      .00
      .00      .00      .00      .00      .00      .00      .00      .01      .00      .01
      .01      .01      .01      .01      .01      .01      .01      .01      .03      .03
      .03      .09      .09      .09      .01      .01      .01      .01      .01      .01
      .01      .01      .01      .01      .01      .01      .00      .00      .00      .00
      .00      .00      .00      .00      .00      .00      .00      .00      .00      .00
      .00      .00      .00      .00      .00      .00      .00      .00      .00      .00
      .00      .00      .00      .00      .00      .00      .00      .00      .00      .00
      .00      .00      .00      .00      .00      .00      .00      .00      .00      .00
      .00      .00      .00      .00      .00      .00      .00      .00      .00      .00
      .00      .00      .00      .00      .00      .00      .00      .00      .00      .00
      .00      .00      .00      .00      .00      .00      .00      .00      .00      .00
      .00      .00      .00      .00      .00      .00      .00      .00      .00      .00
      .00      .00      .00      .00      .00      .00      .00      .00      .00      .00
      .00      .00      .00      .00      .00      .00      .00      .00      .00      .00
      .00      .00      .00      .00      .00      .00      .00      .00      .00      .00
      .00      .00      .00      .00      .00      .00      .00      .00      .00      .00
      .00      .00      .00      .00      .00      .00      .00      .00

318 LG        GREEN AND AMPT LOSS RATE
                    STRTL         .26  STARTING LOSS
                      DTH         .26  MOISTURE DEFICIT
                     PSIF        6.00  WETTING FRONT SUCTION
                    XKSAT         .21  HYDRAULIC CONDUCTIVITY
                    RTIMP       27.00  PERCENT IMPERVIOUS AREA

319 UC        CLARK UNITGRAPH
                       TC         .91  TIME OF CONCENTRATION
                        R         .60  STORAGE COEFFICIENT

320 UA        ACCUMULATED-AREA VS. TIME,  11 ORDINATES
                 .0       5.0      16.0      30.0      65.0      77.0      84.0      90.0      94.0      97.0
              100.0

                                         ***

                                UNIT HYDROGRAPH PARAMETERS
                          CLARK   TC=   .91 HR,        R=   .60 HR
                         SNYDER   TP=   .50 HR,       CP=   .47

                                     UNIT HYDROGRAPH
                                43 END-OF-PERIOD ORDINATES
          6.       23.       49.       93.      140.      156.      155.      149.      140.      130.
        119.      107.       93.       81.       71.       61.       53.       46.       40.       35.
         31.       27.       23.       20.       18.       15.       13.       12.       10.        9.
          8.        7.        6.        5.        4.        4.        3.        3.        2.        2.
          2.        2.        1.

    ***          ***          ***          ***          ***

                  HYDROGRAPH AT STATION    ER55B

   TOTAL RAINFALL =    3.92, TOTAL LOSS =    1.94, TOTAL EXCESS =    1.99

   PEAK FLOW      TIME                        MAXIMUM AVERAGE FLOW
                                     6-HR       24-HR       72-HR    24.92-HR
+    (CFS)        (HR)
                             (CFS)
+     205.       12.42                  46.         14.         13.         13.
                          (INCHES)    1.667       1.972       1.974       1.974
                           (AC-FT)      23.         27.         27.         27.

                   CUMULATIVE AREA =      .26 SQ MI
```

*** ***

```
               *************
               *           *
322 KK         *   ER55R   *
               *           *
               *************

                       DIVERT RETENTION VOLUME

  DT          DIVERSION
                    ISTAD      RET55  DIVERSION HYDROGRAPH IDENTIFICATION
                   DSTRMX      19.20  MAXIMUM VOLUME TO BE DIVERTED

  DI                INFLOW       .00    1000.00   10000.00

  DQ        DIVERTED FLOW        .00    1000.00   10000.00

                                           ***

    ***          ***          ***          ***          ***

                  DIVERSION HYDROGRAPH    RET55
```



```
   PEAK FLOW      TIME                        MAXIMUM AVERAGE FLOW
                                     6-HR       24-HR       72-HR    24.92-HR
+    (CFS)        (HR)
                             (CFS)
+     205.       12.42                  36.         10.          9.          9.
                          (INCHES)    1.315       1.406       1.406       1.406
                           (AC-FT)      18.         19.         19.         19.

                   CUMULATIVE AREA =      .26 SQ MI

    ***          ***          ***          ***          ***

                  HYDROGRAPH AT STATION    ER55R

   PEAK FLOW      TIME                        MAXIMUM AVERAGE FLOW
                                     6-HR       24-HR       72-HR    24.92-HR
+    (CFS)        (HR)
                             (CFS)
+      82.       13.25                  13.          4.          4.          4.
                          (INCHES)     .490        .568        .568        .568
                           (AC-FT)       7.          8.          8.          8.

                   CUMULATIVE AREA =      .26 SQ MI
```

*** ***

```
               *************
               *           *
327 KK         *   RE59B   *
               *           *
               *************
                   ROUTE FLOWS FROM CONCENTRATION POINT CRE55B TO CP CER59B
                   ROUTING REVISED TO REFLECT URBANIZED CONDITIONS

              HYDROGRAPH ROUTING DATA

330 RS           STORAGE ROUTING
                    NSTPS          2  NUMBER OF SUBREACHES
                    ITYP        ELEV  TYPE OF INITIAL CONDITION
                  RSVRIC       -1.00  INITIAL CONDITION
                       X         .00  WORKING R AND D COEFFICIENT

331 RC           NORMAL DEPTH CHANNEL
                     ANL        .035  LEFT OVERBANK N-VALUE
                    ANCH        .035  MAIN CHANNEL N-VALUE
                     ANR        .035  RIGHT OVERBANK N-VALUE
                   RLNTH       2600.  REACH LENGTH
                     SEL       .0020  ENERGY SLOPE
                   ELMAX          .0  MAX. ELEV. FOR STORAGE/OUTFLOW CALCULATION

                                   CROSS-SECTION DATA
                     --- LEFT OVERBANK --- + ------ MAIN CHANNEL ------- + --- RIGHT OVERBANK ---
333 RY      ELEVATION  1026.00  1024.00  1023.00  1020.00  1020.00  1023.00  1024.00  1026.00
332 RX       DISTANCE      .00    30.00    50.00    55.00    65.00    70.00    90.00   120.00

                                           ***

                              COMPUTED STORAGE-OUTFLOW-ELEVATION DATA

        STORAGE       .00      .20      .42      .65      .91     1.19     1.49     1.81     2.14     2.50
        OUTFLOW       .00     2.81     9.03    18.02    29.61    43.73    60.41    79.67   101.56   126.16
      ELEVATION   1020.00  1020.32  1020.63  1020.95  1021.26  1021.58  1021.89  1022.21  1022.53  1022.84

        STORAGE      2.90     3.52     4.37     5.46     6.74     8.20     9.84    11.65    13.65    15.82
        OUTFLOW    156.36   195.06   243.03   303.20   377.48   466.17   570.50   691.62   830.69   988.83
      ELEVATION   1023.16  1023.47  1023.79  1024.11  1024.42  1024.74  1025.05  1025.37  1025.68  1026.00

    ***          ***          ***          ***          ***

                  HYDROGRAPH AT STATION    RE59B

   PEAK FLOW      TIME                        MAXIMUM AVERAGE FLOW
                                     6-HR       24-HR       72-HR    24.92-HR
+    (CFS)        (HR)
                             (CFS)
+      55.       13.67                  13.          4.          4.          4.
                          (INCHES)     .477        .560        .560        .560
                           (AC-FT)       7.          8.          8.          8.

 PEAK STORAGE     TIME                      MAXIMUM AVERAGE STORAGE
                                     6-HR       24-HR       72-HR    24.92-HR
+  (AC-FT)        (HR)
        1.       13.67                   0.          0.          0.          0.

  PEAK STAGE      TIME                       MAXIMUM AVERAGE STAGE
                                     6-HR       24-HR       72-HR    24.92-HR
+   (FEET)        (HR)
   1021.79       13.67             1020.69     1020.24     1020.23     1020.23

                   CUMULATIVE AREA =      .26 SQ MI
```

```
*** *** *** *** *** *** *** *** *** *** *** *** *** *** *** *** *** *** *** *** *** *** *** *** *** *** *** *** *** *** *** *** ***

              **************
              *            *
 334 KK       *    ER59B   *
              *            *
              **************
                            SUB-BASIN ER59B
                            24-HOUR SCS TYPE II RAINFALL WAS USED TO FIND TC & R FOR THIS BASIN
                            THIS BASIN USED RAINFALL REDUCTION FACTOR OF  .934
                              L =  .95  Kb = .030  Adj. Slope =    8.0

                  SUBBASIN RUNOFF DATA

 339 BA             SUBBASIN CHARACTERISTICS
                          TAREA          .26  SUBBASIN AREA

                    PRECIPITATION DATA

  32 PB                   STORM        3.92  BASIN TOTAL PRECIPITATION

  32 PI               INCREMENTAL PRECIPITATION PATTERN
                          .00       .00       .00       .00       .00       .00       .00       .00       .00       .00
                          .00       .00       .00       .00       .00       .00       .00       .00       .00       .00
                          .00       .00       .00       .00       .00       .00       .00       .00       .00       .00
                          .00       .00       .00       .00       .00       .00       .00       .00       .00       .00
                          .00       .00       .00       .00       .00       .00       .00       .00       .00       .00
                          .00       .00       .00       .00       .00       .00       .00       .00       .00       .00
                          .00       .00       .00       .00       .00       .00       .00       .00       .00       .00
                          .00       .00       .00       .00       .00       .00       .00       .00       .00       .00
                          .00       .00       .00       .00       .00       .00       .00       .00       .00       .00
                          .00       .00       .00       .00       .00       .00       .00       .00       .00       .00
                          .00       .00       .00       .00       .00       .00       .00       .00       .00       .00
                          .00       .00       .00       .00       .00       .00       .00       .00       .00       .00
                          .00       .00       .00       .00       .00       .00       .00       .01       .00       .01
                          .01       .01       .01       .01       .01       .01       .01       .01       .03       .03
                          .03       .09       .09       .09       .01       .01       .01       .01       .01       .01
                          .01       .01       .01       .01       .01       .01       .00       .00       .00       .00
                          .00       .00       .00       .00       .00       .00       .00       .00       .00       .00
                          .00       .00       .00       .00       .00       .00       .00       .00       .00       .00
                          .00       .00       .00       .00       .00       .00       .00       .00       .00       .00
                          .00       .00       .00       .00       .00       .00       .00       .00       .00       .00
                          .00       .00       .00       .00       .00       .00       .00       .00       .00       .00
                          .00       .00       .00       .00       .00       .00       .00       .00       .00       .00
                          .00       .00       .00       .00       .00       .00       .00       .00       .00       .00
                          .00       .00       .00       .00       .00       .00       .00       .00       .00       .00
                          .00       .00       .00       .00       .00       .00       .00       .00       .00       .00
                          .00       .00       .00       .00       .00       .00       .00       .00       .00       .00
                          .00       .00       .00       .00       .00       .00       .00       .00       .00       .00
                          .00       .00       .00       .00       .00       .00       .00       .00       .00       .00
                          .00       .00       .00       .00       .00       .00       .00       .00

 340 LG             GREEN AND AMPT LOSS RATE
                          STRTL          .13  STARTING LOSS
                            DTH          .25  MOISTURE DEFICIT
                           PSIF         5.00  WETTING FRONT SUCTION
                          XKSAT          .37  HYDRAULIC CONDUCTIVITY
                          RTIMP        71.00  PERCENT IMPERVIOUS AREA

 341 UC             CLARK UNITGRAPH
                             TC          .67  TIME OF CONCENTRATION
                              R          .49  STORAGE COEFFICIENT

 342 UA             ACCUMULATED-AREA VS. TIME,  11 ORDINATES
                            .0       5.0      16.0      30.0      65.0      77.0      84.0      90.0      94.0      97.0
                         100.0

                                                     ***

                                               UNIT HYDROGRAPH PARAMETERS
                                          CLARK   TC=   .67 HR,        R=   .49 HR
                                         SNYDER   TP=   .40 HR,       CP=   .48

                                                      UNIT HYDROGRAPH
                                                35 END-OF-PERIOD ORDINATES
                   12.       46.      113.      180.      199.      191.      178.      163.      144.      122.
                  103.       87.       73.       62.       52.       44.       37.       31.       26.       22.
                   19.       16.       13.       11.       10.        8.        7.        6.        5.        4.
                    3.        3.        2.        2.        2.

      ***         ***         ***         ***         ***

                            HYDROGRAPH AT STATION     ER59B

     TOTAL RAINFALL =    3.92, TOTAL LOSS =     .82, TOTAL EXCESS =    3.11

   PEAK FLOW     TIME                         MAXIMUM AVERAGE FLOW
                                      6-HR      24-HR       72-HR     24.92-HR
 +   (CFS)       (HR)
                              (CFS)
 +     274.     12.25                  64.        21.         21.         21.
```



```
                              (INCHES)    2.281       3.083       3.089        3.089
                               (AC-FT)      32.         43.         43.          43.

                              CUMULATIVE AREA =     .26 SQ MI


*** *** *** *** *** *** *** *** *** *** *** *** *** *** *** *** *** *** *** *** *** *** *** *** *** *** *** *** *** *** *** *** ***

              **************
              *            *
 344 KK       *    ER59R   *
              *            *
              **************
                              DIVERT RETENTION VOLUME

      DT           DIVERSION
                        ISTAD       RET59  DIVERSION HYDROGRAPH IDENTIFICATION
                       DSTRMX       23.20  MAXIMUM VOLUME TO BE DIVERTED

      DI              INFLOW          .00    1000.00  10000.00

      DQ       DIVERTED FLOW          .00    1000.00  10000.00
                                                          ***

      ***         ***         ***         ***         ***

                            DIVERSION HYDROGRAPH     RET59

   PEAK FLOW     TIME                         MAXIMUM AVERAGE FLOW
                                      6-HR      24-HR       72-HR     24.92-HR
 +   (CFS)       (HR)
                              (CFS)
 +     274.     12.25                  41.        12.         11.         11.
                              (INCHES)    1.460       1.680       1.680        1.680
                               (AC-FT)      20.         23.         23.          23.

                              CUMULATIVE AREA =     .26 SQ MI

      ***         ***         ***         ***         ***

                            HYDROGRAPH AT STATION     ER59R

   PEAK FLOW     TIME                         MAXIMUM AVERAGE FLOW
                                      6-HR      24-HR       72-HR     24.92-HR
 +   (CFS)       (HR)
                              (CFS)
 +     194.     12.67                  33.        10.          9.          9.
                              (INCHES)    1.184       1.409       1.409        1.409
                               (AC-FT)      16.         19.         19.          19.

                              CUMULATIVE AREA =     .26 SQ MI


*** *** *** *** *** *** *** *** *** *** *** *** *** *** *** *** *** *** *** *** *** *** *** *** *** *** *** *** *** *** *** *** ***

              **************
              *            *
 349 KK       *   CER59B   *
              *            *
              **************
                              COMBINE ROUTED FLOW FROM CP CRE55B TO RUNOFF FROM SUBBASIN ER59B

 351 HC            HYDROGRAPH COMBINATION
                         ICOMP            2  NUMBER OF HYDROGRAPHS TO COMBINE
                                                          ***

      ***         ***         ***         ***         ***

                            HYDROGRAPH AT STATION    CER59B

   PEAK FLOW     TIME                         MAXIMUM AVERAGE FLOW
                                      6-HR      24-HR       72-HR     24.92-HR
 +   (CFS)       (HR)
                              (CFS)
 +     194.     12.67                  46.        14.         13.         13.
                              (INCHES)     .826        .987        .987         .987
                               (AC-FT)      23.         27.         27.          27.

                              CUMULATIVE AREA =     .51 SQ MI


*** *** *** *** *** *** *** *** *** *** *** *** *** *** *** *** *** *** *** *** *** *** *** *** *** *** *** *** *** *** *** *** ***

              **************
```

```
              *            *
352 KK        *    RCERB   *
              *            *
              **************
                            ******FREEWAY CHANNEL(CONC. LINED) - 4' DEEP, 4' BOTTOM, 4:1 SIDE SLOPES*****
                            ROUTE FLOW FROM COMPUTATION POINT CPCER59B COMPUTAION CDR57C
                            CROSS-SECTION REVISED TO REFLECT URBANIZED CONDITIONS

               HYDROGRAPH ROUTING DATA

356 RS           STORAGE ROUTING
                      NSTPS           2  NUMBER OF SUBREACHES
                       ITYP        ELEV  TYPE OF INITIAL CONDITION
                     RSVRIC       -1.00  INITIAL CONDITION
                          X         .00 WORKING R AND D COEFFICIENT

357 RC           NORMAL DEPTH CHANNEL
                        ANL        .035  LEFT OVERBANK N-VALUE
                       ANCH        .035  MAIN CHANNEL N-VALUE
                        ANR        .035  RIGHT OVERBANK N-VALUE
                      RLNTH       2920.  REACH LENGTH
                        SEL       .0010  ENERGY SLOPE
                      ELMAX          .0  MAX. ELEV. FOR STORAGE/OUTFLOW CALCULATION

                                             CROSS-SECTION DATA
                              --- LEFT OVERBANK --- + ------ MAIN CHANNEL ------- + --- RIGHT OVERBANK ---
359 RY         ELEVATION  1029.00  1029.00  1029.00  1025.00  1025.00  1029.00  1029.00  1029.00
358 RX         DISTANCE       .00    40.00    60.00    76.00    80.00    96.00   129.00   149.00

                                                            ***

                                        COMPUTED STORAGE-OUTFLOW-ELEVATION DATA

           STORAGE       .00       .07       .16       .28       .42       .58       .77       .98      1.21      1.47
           OUTFLOW       .00       .43      1.51      3.25      5.72      9.02     13.20     18.34     24.53     31.83
         ELEVATION   1025.00   1025.21   1025.42   1025.63   1025.84   1026.05   1026.26   1026.47   1026.68   1026.90

           STORAGE      1.75      2.06      2.39      2.74      3.12      3.52      3.95      4.40      4.87      5.37
           OUTFLOW     40.31     50.03     61.06     73.47     87.32    102.66    119.57    138.09    158.29    180.25
         ELEVATION   1027.11   1027.32   1027.53   1027.74   1027.95   1028.16   1028.37   1028.58   1028.79   1029.00


     ***             ***             ***             ***             ***

                         HYDROGRAPH AT STATION      RCERB

 PEAK FLOW      TIME                        MAXIMUM AVERAGE FLOW
                                    6-HR         24-HR        72-HR      24.92-HR
+   (CFS)       (HR)
                         (CFS)
+      116.     13.17                45.          13.          13.           13.
                       (INCHES)    .804         .973         .973         .973
                        (AC-FT)     22.          27.          27.           27.

 PEAK STORAGE   TIME                       MAXIMUM AVERAGE STORAGE
                                    6-HR         24-HR        72-HR      24.92-HR
+  (AC-FT)      (HR)
        2.      13.17                 1.           0.           0.            0.

 PEAK STAGE     TIME                        MAXIMUM AVERAGE STAGE
                                    6-HR         24-HR        72-HR      24.92-HR
+   (FEET)      (HR)
   1028.33      13.17             1027.02      1025.78      1025.75      1025.75

                        CUMULATIVE AREA =       .51 SQ MI


*** *** *** *** *** *** *** *** *** *** *** *** *** *** *** *** *** *** *** *** *** *** *** *** *** *** *** *** *** *** *** *** *** ***


              **************
              *            *
360 KK        *    OA55C   *
              *            *
              **************
                            SUB-BASIN OA55C
                            24-HOUR SCS TYPE II RAINFALL WAS USED TO FIND TC & R FOR THIS BASIN
                            THIS BASIN USED RAINFALL REDUCTION FACTOR OF  .934
                              L =  .96  Kb = .049  Adj. Slope =     3.0

             SUBBASIN RUNOFF DATA

365 BA           SUBBASIN CHARACTERISTICS
                      TAREA         .25  SUBBASIN AREA

                 PRECIPITATION DATA

32 PB                 STORM        3.92  BASIN TOTAL PRECIPITATION

32 PI              INCREMENTAL PRECIPITATION PATTERN
                        .00       .00       .00       .00       .00       .00       .00       .00       .00       .00
                        .00       .00       .00       .00       .00       .00       .00       .00       .00       .00
                        .00       .00       .00       .00       .00       .00       .00       .00       .00       .00
                        .00       .00       .00       .00       .00       .00       .00       .00       .00       .00
```



```
                        .00       .00       .00       .00       .00       .00       .00       .00       .00       .00
                        .00       .00       .00       .00       .00       .00       .00       .00       .00       .00
                        .00       .00       .00       .00       .00       .00       .00       .00       .00       .00
                        .00       .00       .00       .00       .00       .00       .00       .00       .00       .00
                        .00       .00       .00       .00       .00       .00       .00       .00       .00       .00
                        .00       .00       .00       .00       .00       .00       .00       .00       .00       .00
                        .00       .00       .00       .00       .00       .00       .00       .00       .00       .00
                        .00       .00       .00       .00       .00       .00       .00       .00       .00       .00
                        .00       .00       .00       .00       .00       .00       .00       .01       .00       .01
                        .01       .01       .01       .01       .01       .01       .01       .01       .03       .03
                        .03       .09       .09       .09       .01       .01       .01       .01       .01       .01
                        .01       .01       .01       .01       .01       .01       .00       .00       .00       .00
                        .00       .00       .00       .00       .00       .00       .00       .00       .00       .00
                        .00       .00       .00       .00       .00       .00       .00       .00       .00       .00
                        .00       .00       .00       .00       .00       .00       .00       .00       .00       .00
                        .00       .00       .00       .00       .00       .00       .00       .00       .00       .00
                        .00       .00       .00       .00       .00       .00       .00       .00       .00       .00
                        .00       .00       .00       .00       .00       .00       .00       .00       .00       .00
                        .00       .00       .00       .00       .00       .00       .00       .00       .00       .00
                        .00       .00       .00       .00       .00       .00       .00       .00       .00       .00
                        .00       .00       .00       .00       .00       .00       .00       .00       .00       .00
                        .00       .00       .00       .00       .00       .00       .00       .00       .00       .00
                        .00       .00       .00       .00       .00       .00       .00       .00       .00       .00
                        .00       .00       .00       .00       .00       .00       .00       .00       .00       .00
                        .00       .00       .00       .00       .00       .00       .00       .00

366 LG           GREEN AND AMPT LOSS RATE
                      STRTL         .29  STARTING LOSS
                        DTH         .25  MOISTURE DEFICIT
                       PSIF        4.80  WETTING FRONT SUCTION
                      XKSAT         .36  HYDRAULIC CONDUCTIVITY
                      RTIMP       19.00  PERCENT IMPERVIOUS AREA

367 UC           CLARK UNITGRAPH
                         TC        1.50  TIME OF CONCENTRATION
                          R        1.25  STORAGE COEFFICIENT

368 UA           ACCUMULATED-AREA VS. TIME,  11 ORDINATES
                        .0       5.0      16.0      30.0      65.0      77.0      84.0      90.0      94.0      97.0
                     100.0

                                                       ***

                                             UNIT HYDROGRAPH PARAMETERS
                                        CLARK    TC=  1.50 HR,        R=  1.25 HR
                                       SNYDER    TP=   .84 HR,       CP=   .40

                                                 UNIT HYDROGRAPH
                                             87 END-OF-PERIOD ORDINATES
                     2.        5.       11.       18.       26.       38.       57.       71.       76.       77.
                    77.       77.       75.       74.       72.       69.       67.       64.       61.       57.
                    54.       50.       47.       44.       41.       38.       36.       34.       31.       29.
                    28.       26.       24.       23.       21.       20.       18.       17.       16.       15.
                    14.       13.       12.       12.       11.       10.        9.        9.        8.        8.
                     7.        7.        6.        6.        6.        5.        5.        5.        4.        4.
                     4.        3.        3.        3.        3.        3.        2.        2.        2.        2.
                     2.        2.        2.        2.        1.        1.        1.        1.        1.        1.
                     1.        1.        1.        1.        1.        1.        1.

     ***             ***             ***             ***             ***

                         HYDROGRAPH AT STATION      OA55C

   TOTAL RAINFALL =     3.92, TOTAL LOSS =     2.29, TOTAL EXCESS =     1.63

 PEAK FLOW      TIME                        MAXIMUM AVERAGE FLOW
                                    6-HR         24-HR        72-HR      24.92-HR
+   (CFS)       (HR)
                         (CFS)
+       97.     12.75                37.          11.          10.           10.
                       (INCHES)   1.383        1.618        1.619        1.619
                        (AC-FT)     18.          21.          21.           21.

                        CUMULATIVE AREA =       .25 SQ MI


*** *** *** *** *** *** *** *** *** *** *** *** *** *** *** *** *** *** *** *** *** *** *** *** *** *** *** *** *** *** *** *** *** ***


              **************
              *            *
370 KK        *    OA55R   *
              *            *
              **************
                          DIVERT RETENTION VOLUME

  DT             DIVERSION
                      ISTAD      RET55C  DIVERSION HYDROGRAPH IDENTIFICATION
                     DSTRMX        2.40  MAXIMUM VOLUME TO BE DIVERTED

  DI                 INFLOW         .00   1000.00  10000.00

  DQ         DIVERTED FLOW          .00   1000.00  10000.00
```

```
                                                          ***

        ***             ***            ***            ***            ***

                        DIVERSION HYDROGRAPH    RET55C

   PEAK FLOW     TIME                       MAXIMUM AVERAGE FLOW
                                   6-HR        24-HR        72-HR     24.92-HR
 +   (CFS)       (HR)
                             (CFS)
 +      27.     12.08                  4.          1.           1.          1.
                          (INCHES)   .141        .183         .183        .183
                           (AC-FT)     2.          2.           2.          2.

                          CUMULATIVE AREA =     .25 SQ MI

        ***             ***            ***            ***            ***

                        HYDROGRAPH AT STATION     OA55R

   PEAK FLOW     TIME                       MAXIMUM AVERAGE FLOW
                                   6-HR        24-HR        72-HR     24.92-HR
 +   (CFS)       (HR)
                             (CFS)
 +      97.     12.75                 36.          9.           9.          9.
                          (INCHES)  1.350       1.436        1.436       1.436
                           (AC-FT)    18.         19.          19.         19.

                          CUMULATIVE AREA =     .25 SQ MI


*** *** *** *** *** *** *** *** *** *** *** *** *** *** *** *** *** *** *** *** *** *** *** *** *** *** *** *** *** *** *** *** ***


               **************
               *            *
 375 KK        *    RD57C   *
               *            *
               **************
                         ROUTE FLOW FROM COMPUTATION POINT CP055C TO COMPUTAION CDR57C
                         CROSS-SECTION REVISED TO REFLECT URBANIZED CONDITIONS

                HYDROGRAPH ROUTING DATA

 378 RS            STORAGE ROUTING
                         NSTPS            2  NUMBER OF SUBREACHES
                          ITYP         ELEV  TYPE OF INITIAL CONDITION
                        RSVRIC        -1.00  INITIAL CONDITION
                             X          .00  WORKING R AND D COEFFICIENT

 379 RC            NORMAL DEPTH CHANNEL
                           ANL         .035  LEFT OVERBANK N-VALUE
                          ANCH         .035  MAIN CHANNEL N-VALUE
                           ANR         .035  RIGHT OVERBANK N-VALUE
                         RLNTH        2920.  REACH LENGTH
                           SEL        .0010  ENERGY SLOPE
                         ELMAX           .0  MAX. ELEV. FOR STORAGE/OUTFLOW CALCULATION

                                         CROSS-SECTION DATA
                         --- LEFT OVERBANK --- + ------ MAIN CHANNEL ------- + --- RIGHT OVERBANK ---
 381 RY          ELEVATION  1030.00   1029.00   1028.00   1022.00   1022.00   1028.00   1029.00   1030.00
 380 RX          DISTANCE       .00     40.00     60.00     72.00     97.00    109.00    129.00    149.00
                                                                 ***

                                           COMPUTED STORAGE-OUTFLOW-ELEVATION DATA

                  STORAGE       .00       .73      1.51      2.33      3.20      4.12      5.09      6.10      7.17      8.28
                  OUTFLOW       .00      8.02     25.66     50.92     83.12    121.92    167.17    218.82    276.86    341.32
                ELEVATION   1022.00   1022.42   1022.84   1023.26   1023.68   1024.11   1024.53   1024.95   1025.37   1025.79

                  STORAGE      9.43     10.64     11.89     13.19     14.54     16.05     18.03     20.50     23.63     27.48
                  OUTFLOW    412.27    489.78    573.94    664.85    762.62    882.59   1020.65   1176.06   1354.56   1562.96
                ELEVATION   1026.21   1026.63   1027.05   1027.47   1027.89   1028.32   1028.74   1029.16   1029.58   1030.00

        ***             ***            ***            ***            ***

                        HYDROGRAPH AT STATION     RD57C

   PEAK FLOW     TIME                       MAXIMUM AVERAGE FLOW
                                   6-HR        24-HR        72-HR     24.92-HR
 +   (CFS)       (HR)
                             (CFS)
 +      90.     13.17                 35.          9.           9.          9.
                          (INCHES)  1.317       1.427        1.427       1.427
                           (AC-FT)    17.         19.          19.         19.

 PEAK STORAGE    TIME                      MAXIMUM AVERAGE STORAGE
                                   6-HR        24-HR        72-HR     24.92-HR
 +  (AC-FT)      (HR)
        2.      13.17                  1.          0.           0.          0.
```



```
   PEAK STAGE    TIME                       MAXIMUM AVERAGE STAGE
                                   6-HR        24-HR        72-HR     24.92-HR
 +   (FEET)      (HR)
    1023.76     13.17              1022.92     1022.27      1022.26     1022.26

                          CUMULATIVE AREA =     .25 SQ MI


*** *** *** *** *** *** *** *** *** *** *** *** *** *** *** *** *** *** *** *** *** *** *** *** *** *** *** *** *** *** *** *** ***


               **************
               *            *
 382 KK        *    DR57C   *
               *            *
               **************
                         SUB-BASIN DR57C
                         24-HOUR SCS TYPE II RAINFALL WAS USED TO FIND TC & R FOR THIS BASIN
                         THIS BASIN USED RAINFALL REDUCTION FACTOR OF  .934
                           L =  .71   Kb = .054  Adj. Slope =     3.0

                SUBBASIN RUNOFF DATA

 387 BA            SUBBASIN CHARACTERISTICS
                         TAREA          .12  SUBBASIN AREA

                   PRECIPITATION DATA

  32 PB                  STORM         3.92  BASIN TOTAL PRECIPITATION

  32 PI              INCREMENTAL PRECIPITATION PATTERN
                     .00      .00      .00      .00      .00      .00      .00      .00      .00      .00
                     .00      .00      .00      .00      .00      .00      .00      .00      .00      .00
                     .00      .00      .00      .00      .00      .00      .00      .00      .00      .00
                     .00      .00      .00      .00      .00      .00      .00      .00      .00      .00
                     .00      .00      .00      .00      .00      .00      .00      .00      .00      .00
                     .00      .00      .00      .00      .00      .00      .00      .00      .00      .00
                     .00      .00      .00      .00      .00      .00      .00      .00      .00      .00
                     .00      .00      .00      .00      .00      .00      .00      .00      .00      .00
                     .00      .00      .00      .00      .00      .00      .00      .00      .00      .00
                     .00      .00      .00      .00      .00      .00      .00      .00      .00      .00
                     .00      .00      .00      .00      .00      .00      .00      .00      .00      .00
                     .00      .00      .00      .00      .00      .00      .00      .00      .00      .00
                     .00      .00      .00      .00      .00      .00      .00      .01      .00      .01
                     .01      .01      .01      .01      .01      .01      .01      .01      .03      .03
                     .03      .09      .09      .09      .01      .01      .01      .01      .01      .01
                     .01      .01      .01      .01      .01      .01      .00      .00      .00      .00
                     .00      .00      .00      .00      .00      .00      .00      .00      .00      .00
                     .00      .00      .00      .00      .00      .00      .00      .00      .00      .00
                     .00      .00      .00      .00      .00      .00      .00      .00      .00      .00
                     .00      .00      .00      .00      .00      .00      .00      .00      .00      .00
                     .00      .00      .00      .00      .00      .00      .00      .00      .00      .00
                     .00      .00      .00      .00      .00      .00      .00      .00      .00      .00
                     .00      .00      .00      .00      .00      .00      .00      .00      .00      .00
                     .00      .00      .00      .00      .00      .00      .00      .00      .00      .00
                     .00      .00      .00      .00      .00      .00      .00      .00      .00      .00
                     .00      .00      .00      .00      .00      .00      .00      .00      .00      .00
                     .00      .00      .00      .00      .00      .00      .00      .00      .00      .00
                     .00      .00      .00      .00      .00      .00      .00      .00      .00      .00
                     .00      .00      .00      .00      .00      .00      .00      .00

 388 LG             GREEN AND AMPT LOSS RATE
                         STRTL          .30  STARTING LOSS
                           DTH          .25  MOISTURE DEFICIT
                          PSIF         4.80  WETTING FRONT SUCTION
                         XKSAT          .36  HYDRAULIC CONDUCTIVITY
                         RTIMP        15.00  PERCENT IMPERVIOUS AREA

 389 UC             CLARK UNITGRAPH
                            TC         1.50  TIME OF CONCENTRATION
                             R         1.49  STORAGE COEFFICIENT

 390 UA             ACCUMULATED-AREA VS. TIME,  11 ORDINATES
                           .0        5.0       16.0       30.0       65.0       77.0       84.0       90.0       94.0       97.0
                       100.0

                                                          ***

                                             UNIT HYDROGRAPH PARAMETERS
                                        CLARK   TC=  1.50 HR,        R=  1.49 HR
                                        SNYDER  TP=   .94 HR,       CP=   .39

                                                  UNIT HYDROGRAPH
                                             103 END-OF-PERIOD ORDINATES
                  1.        2.        4.        7.       11.       16.       23.       29.       32.       32.
                 33.       33.       32.       32.       31.       30.       29.       29.       28.       26.
                 25.       23.       22.       21.       20.       19.       18.       17.       16.       15.
                 14.       13.       13.       12.       11.       11.       10.       10.        9.        9.
                  8.        8.        7.        7.        6.        6.        6.        5.        5.        5.
                  5.        4.        4.        4.        4.        3.        3.        3.        3.        3.
                  3.        2.        2.        2.        2.        2.        2.        2.        2.        2.
                  2.        1.        1.        1.        1.        1.        1.        1.        1.        1.
                  1.        1.        1.        1.        1.        1.        1.        1.        1.        1.
                  0.        0.        0.        0.        0.        0.        0.        0.        0.        0.
```

```
                0.       0.       0.
      ***             ***             ***             ***             ***

                          HYDROGRAPH AT STATION    DR57C

     TOTAL RAINFALL =    3.92, TOTAL LOSS =    2.40, TOTAL EXCESS =    1.52

  PEAK FLOW     TIME                              MAXIMUM AVERAGE FLOW
                                        6-HR        24-HR        72-HR       24.92-HR
+   (CFS)        (HR)
                  (CFS)
+      40.     12.75                     16.          5.           5.           5.
                (INCHES)               1.300        1.504        1.505        1.505
                (AC-FT)                  8.           9.           9.           9.

                CUMULATIVE AREA =      .12 SQ MI


*** *** *** *** *** *** *** *** *** *** *** *** *** *** *** *** *** *** *** *** *** *** *** *** *** *** *** *** *** *** *** *** *** *** ***

             ***************
             *             *
392 KK       *     DR57R   *
             *             *
             ***************
                          DIVERT RETENTION VOLUME

     DT          DIVERSION
                      ISTAD        RET27  DIVERSION HYDROGRAPH IDENTIFICATION
                     DSTRMX        12.80  MAXIMUM VOLUME TO BE DIVERTED

     DI             INFLOW          .00   1000.00  10000.00

     DQ       DIVERTED FLOW         .00   1000.00  10000.00

                                                                    ***
      ***             ***             ***             ***             ***

                          DIVERSION HYDROGRAPH     RET27

  PEAK FLOW     TIME                              MAXIMUM AVERAGE FLOW
                                        6-HR        24-HR        72-HR       24.92-HR
+   (CFS)        (HR)
                  (CFS)
+      40.     12.75                     16.          5.           5.           5.
                (INCHES)               1.300        1.504        1.505        1.505
                (AC-FT)                  8.           9.           9.           9.

                CUMULATIVE AREA =      .12 SQ MI

      ***             ***             ***             ***             ***

                          HYDROGRAPH AT STATION     DR57R

  PEAK FLOW     TIME                              MAXIMUM AVERAGE FLOW
                                        6-HR        24-HR        72-HR       24.92-HR
+   (CFS)        (HR)
                  (CFS)
+       0.       .00                      0.           0.           0.           0.
                (INCHES)               .000         .000         .000         .000
                (AC-FT)                  0.           0.           0.           0.

                CUMULATIVE AREA =      .12 SQ MI


*** *** *** *** *** *** *** *** *** *** *** *** *** *** *** *** *** *** *** *** *** *** *** *** *** *** *** *** *** *** *** *** *** *** ***

             ***************
             *             *
397 KK       *    CDR57C   *
             *             *
             ***************
                          COMBINE ROUTED FLOW FROM COMPUTATION POINT CP055C TO RUNOFF FROM SUB-BASIN
                          DR57C

400 HC            HYDROGRAPH COMBINATION
                       ICOMP            2  NUMBER OF HYDROGRAPHS TO COMBINE
                                                                    ***
      ***             ***             ***             ***             ***

                          HYDROGRAPH AT STATION    CDR57C

  PEAK FLOW     TIME                              MAXIMUM AVERAGE FLOW
                                        6-HR        24-HR        72-HR       24.92-HR
+   (CFS)        (HR)
```



```
                  (CFS)
+      90.     13.17                     35.          9.           9.           9.
                (INCHES)               .890         .964         .964         .964
                (AC-FT)                 17.          19.          19.          19.

                CUMULATIVE AREA =      .36 SQ MI


*** *** *** *** *** *** *** *** *** *** *** *** *** *** *** *** *** *** *** *** *** *** *** *** *** *** *** *** *** *** *** *** *** *** ***

             ***************
             *             *
401 KK       *     RD59C   *
             *             *
             ***************
                          ROUTE FLOW FROM COMPUTATION POINT CDR57C TO COMPUTATION POINT CDR59C
                          CROSS-SECTION REVISED TO REFLECT URBANIZED CONDITIONS

               HYDROGRAPH ROUTING DATA

404 RS           STORAGE ROUTING
                      NSTPS            1  NUMBER OF SUBREACHES
                      ITYP         ELEV  TYPE OF INITIAL CONDITION
                     RSVRIC        -1.00  INITIAL CONDITION
                          X          .00 WORKING R AND D COEFFICIENT

405 RC           NORMAL DEPTH CHANNEL
                       ANL         .035  LEFT OVERBANK N-VALUE
                      ANCH         .035  MAIN CHANNEL N-VALUE
                       ANR         .035  RIGHT OVERBANK N-VALUE
                     RLNTH        1200.  REACH LENGTH
                       SEL        .0025  ENERGY SLOPE
                     ELMAX           .0  MAX. ELEV. FOR STORAGE/OUTFLOW CALCULATION

                                CROSS-SECTION DATA
                          --- LEFT OVERBANK --- + ------ MAIN CHANNEL ------- + --- RIGHT OVERBANK ---
407 RY       ELEVATION   1026.00   1025.00   1024.00   1019.00   1019.00   1024.00   1025.00   1026.00
406 RX       DISTANCE        .00     40.00     60.00     72.00     97.00    109.00    129.00    149.00

                                                                    ***
                          COMPUTED STORAGE-OUTFLOW-ELEVATION DATA

     STORAGE        .00       .26       .54       .84      1.16      1.49      1.85      2.22      2.60      3.01
     OUTFLOW        .00     10.16     32.59     64.79    105.94    155.65    213.76    280.23    355.06    438.34
   ELEVATION    1019.00   1019.37   1019.74   1020.11   1020.47   1020.84   1021.21   1021.58   1021.95   1022.32

     STORAGE       3.43      3.88      4.34      4.81      5.32      5.96      6.74      7.70      8.87     10.27
     OUTFLOW     530.14    630.60    739.84    858.01    995.48   1160.30   1344.97   1552.42   1791.08   2067.16
   ELEVATION    1022.68   1023.05   1023.42   1023.79   1024.16   1024.53   1024.89   1025.26   1025.63   1026.00

      ***             ***             ***             ***             ***

                          HYDROGRAPH AT STATION     RD59C

  PEAK FLOW     TIME                              MAXIMUM AVERAGE FLOW
                                        6-HR        24-HR        72-HR       24.92-HR
+   (CFS)        (HR)
                  (CFS)
+      89.     13.33                     35.          9.           9.           9.
                (INCHES)               .884         .962         .962         .962
                (AC-FT)                 17.          19.          19.          19.

  PEAK STORAGE  TIME                              MAXIMUM AVERAGE STORAGE
                                        6-HR        24-HR        72-HR       24.92-HR
+ (AC-FT)        (HR)
        1.     13.33                      1.           0.           0.           0.

  PEAK STAGE    TIME                              MAXIMUM AVERAGE STAGE
                                        6-HR        24-HR        72-HR       24.92-HR
+   (FEET)       (HR)
  1020.32     13.33                   1019.69      1019.20      1019.19      1019.19

                CUMULATIVE AREA =      .36 SQ MI


*** *** *** *** *** *** *** *** *** *** *** *** *** *** *** *** *** *** *** *** *** *** *** *** *** *** *** *** *** *** *** *** *** *** ***

             ***************
             *             *
408 KK       *     DR59C   *
             *             *
             ***************
                          SUB-BASIN DR59C
                          24-HOUR SCS TYPE II RAINFALL WAS USED TO FIND TC & R FOR THIS BASIN
                          THIS BASIN USED RAINFALL REDUCTION FACTOR OF  .934
                            L =  .69  Kb = .048  Adj. Slope =    7.0

               SUBBASIN RUNOFF DATA
```

```
413 BA          SUBBASIN CHARACTERISTICS
                      TAREA         .12  SUBBASIN AREA

                PRECIPITATION DATA

 32 PB                STORM        3.92  BASIN TOTAL PRECIPITATION

 32 PI            INCREMENTAL PRECIPITATION PATTERN
                      .00     .00     .00     .00     .00     .00     .00     .00     .00     .00
                      .00     .00     .00     .00     .00     .00     .00     .00     .00     .00
                      .00     .00     .00     .00     .00     .00     .00     .00     .00     .00
                      .00     .00     .00     .00     .00     .00     .00     .00     .00     .00
                      .00     .00     .00     .00     .00     .00     .00     .00     .00     .00
                      .00     .00     .00     .00     .00     .00     .00     .00     .00     .00
                      .00     .00     .00     .00     .00     .00     .00     .00     .00     .00
                      .00     .00     .00     .00     .00     .00     .00     .00     .00     .00
                      .00     .00     .00     .00     .00     .00     .00     .00     .00     .00
                      .00     .00     .00     .00     .00     .00     .00     .00     .00     .00
                      .00     .00     .00     .00     .00     .00     .00     .00     .00     .00
                      .00     .00     .00     .00     .00     .00     .00     .00     .00     .00
                      .00     .00     .00     .00     .00     .00     .00     .01     .00     .01
                      .01     .01     .01     .01     .01     .01     .01     .01     .03     .03
                      .03     .09     .09     .09     .01     .01     .01     .01     .01     .01
                      .01     .01     .01     .01     .01     .01     .00     .00     .00     .00
                      .00     .00     .00     .00     .00     .00     .00     .00     .00     .00
                      .00     .00     .00     .00     .00     .00     .00     .00     .00     .00
                      .00     .00     .00     .00     .00     .00     .00     .00     .00     .00
                      .00     .00     .00     .00     .00     .00     .00     .00     .00     .00
                      .00     .00     .00     .00     .00     .00     .00     .00     .00     .00
                      .00     .00     .00     .00     .00     .00     .00     .00     .00     .00
                      .00     .00     .00     .00     .00     .00     .00     .00     .00     .00
                      .00     .00     .00     .00     .00     .00     .00     .00     .00     .00
                      .00     .00     .00     .00     .00     .00     .00     .00     .00     .00
                      .00     .00     .00     .00     .00     .00     .00     .00     .00     .00
                      .00     .00     .00     .00     .00     .00     .00     .00     .00     .00
                      .00     .00     .00     .00     .00     .00     .00     .00     .00     .00
                      .00     .00     .00     .00     .00     .00     .00     .00

414 LG          GREEN AND AMPT LOSS RATE
                      STRTL         .23  STARTING LOSS
                        DTH         .25  MOISTURE DEFICIT
                       PSIF        4.80  WETTING FRONT SUCTION
                      XKSAT         .37  HYDRAULIC CONDUCTIVITY
                      RTIMP       37.00  PERCENT IMPERVIOUS AREA

415 UC          CLARK UNITGRAPH
                         TC        1.55  TIME OF CONCENTRATION
                          R        1.52  STORAGE COEFFICIENT

416 UA          ACCUMULATED-AREA VS. TIME,  11 ORDINATES
                      .0      5.0     16.0     30.0     65.0     77.0     84.0     90.0     94.0     97.0
                   100.0

                                                   ***

                                          UNIT HYDROGRAPH PARAMETERS
                                     CLARK   TC=  1.55 HR,        R=  1.52 HR
                                    SNYDER   TP=   .95 HR,       CP=   .39

                                               UNIT HYDROGRAPH
                                          105 END-OF-PERIOD ORDINATES
             1.        2.        4.        7.       10.       14.       21.       27.       30.       31.
            31.       32.       31.       31.       30.       30.       29.       28.       27.       26.
            25.       23.       22.       21.       20.       19.       18.       17.       16.       15.
            14.       14.       13.       12.       11.       11.       10.       10.        9.        9.
             8.        8.        7.        7.        7.        6.        6.        6.        5.        5.
             5.        5.        4.        4.        4.        4.        3.        3.        3.        3.
             3.        3.        2.        2.        2.        2.        2.        2.        2.        2.
             2.        2.        1.        1.        1.        1.        1.        1.        1.        1.
             1.        1.        1.        1.        1.        1.        1.        1.        1.        1.
             1.        1.        0.        0.        0.        0.        0.        0.        0.        0.
             0.        0.        0.        0.        0.

     ***            ***            ***            ***            ***

                         HYDROGRAPH AT STATION     DR59C

  TOTAL RAINFALL =     3.92, TOTAL LOSS =     1.78, TOTAL EXCESS =     2.14

 PEAK FLOW       TIME                          MAXIMUM AVERAGE FLOW
                                        6-HR        24-HR        72-HR      24.92-HR
+   (CFS)        (HR)
                             (CFS)
+      45.      12.83                    21.           7.           6.            6.
                          (INCHES)     1.644        2.112        2.113         2.113
                           (AC-FT)       10.          13.          13.           13.

                          CUMULATIVE AREA =      .12 SQ MI


*** *** *** *** *** *** *** *** *** *** *** *** *** *** *** *** *** *** *** *** *** *** *** *** *** *** *** *** *** *** *** *** *** ***
```



```
                **************
                *            *
 418 KK         *     DR59R  *
                *            *
                **************
                                  DIVERT RETENTION VOLUME

   DT             DIVERSION
                        ISTAD        RET59C  DIVERSION HYDROGRAPH IDENTIFICATION
                       DSTRMX         10.40  MAXIMUM VOLUME TO BE DIVERTED

   DI                  INFLOW           .00   1000.00  10000.00

   DQ          DIVERTED FLOW           .00   1000.00  10000.00

                                                                    ***

     ***            ***            ***            ***            ***

                                DIVERSION HYDROGRAPH     RET59C

 PEAK FLOW       TIME                          MAXIMUM AVERAGE FLOW
                                        6-HR        24-HR        72-HR      24.92-HR
+   (CFS)        (HR)
                             (CFS)
+      45.      12.83                    19.           5.           5.            5.
                          (INCHES)     1.501        1.667        1.667         1.667
                           (AC-FT)        9.          10.          10.           10.

                          CUMULATIVE AREA =      .12 SQ MI

     ***            ***            ***            ***            ***

                                HYDROGRAPH AT STATION     DR59R

 PEAK FLOW       TIME                          MAXIMUM AVERAGE FLOW
                                        6-HR        24-HR        72-HR      24.92-HR
+   (CFS)        (HR)
                             (CFS)
+      13.      15.67                     5.           1.           1.            1.
                          (INCHES)      .383         .446         .446          .446
                           (AC-FT)        2.           3.           3.            3.

                          CUMULATIVE AREA =      .12 SQ MI


*** *** *** *** *** *** *** *** *** *** *** *** *** *** *** *** *** *** *** *** *** *** *** *** *** *** *** *** *** *** *** *** *** ***

                **************
                *            *
 423 KK         *    CDR59C  *
                *            *
                **************
                                COMBINE ROUTED FLOW FROM COMPUTATION POINT CDR57C TO RUNOFF FROM SUB-BASIN
                                DR59C

 426 HC           HYDROGRAPH COMBINATION
                        ICOMP            3  NUMBER OF HYDROGRAPHS TO COMBINE
                                                                    ***

     ***            ***            ***            ***            ***

                               HYDROGRAPH AT STATION    CDR59C

 PEAK FLOW       TIME                          MAXIMUM AVERAGE FLOW
                                        6-HR        24-HR        72-HR      24.92-HR
+   (CFS)        (HR)
                             (CFS)
+     203.      13.17                    83.          24.          23.           23.
                          (INCHES)      .773         .907         .907          .907
                           (AC-FT)       41.          48.          48.           48.

                          CUMULATIVE AREA =     1.00 SQ MI


*** *** *** *** *** *** *** *** *** *** *** *** *** *** *** *** *** *** *** *** *** *** *** *** *** *** *** *** *** *** *** *** *** ***

                **************
                *            *
 427 KK         *     RB259  *
                *            *
                **************
                              *****FREEWAY CHANNEL(CONC LINED)4' DEEP, 4' BOTTOM, 4:1 SIDE SLOPES*******
                              ROUTE FLOW FROM COMPUTATION POINT CDR59C TO COMPUTATION POINT CB259C
                              CROSS-SECTION REVISED TO REFLECT URBANIZED CONDITIONS
                              REVISED SLOPW FROM .0046 TO REFLECT A VELOCITY OF LESS THAN 4 FT/SEC
```

```
           HYDROGRAPH ROUTING DATA

433 RS      STORAGE ROUTING
              NSTPS          2  NUMBER OF SUBREACHES
               ITYP       ELEV  TYPE OF INITIAL CONDITION
             RSVRIC      -1.00  INITIAL CONDITION
                  X        .00  WORKING R AND D COEFFICIENT

434 RC      NORMAL DEPTH CHANNEL
                ANL       .035  LEFT OVERBANK N-VALUE
               ANCH       .020  MAIN CHANNEL N-VALUE
                ANR       .035  RIGHT OVERBANK N-VALUE
              RLNTH      5280.  REACH LENGTH
                SEL      .0015  ENERGY SLOPE
              ELMAX         .0  MAX. ELEV. FOR STORAGE/OUTFLOW CALCULATION

                                   CROSS-SECTION DATA
                   --- LEFT OVERBANK --- + ------ MAIN CHANNEL ------- + --- RIGHT OVERBANK ---
436 RY    ELEVATION  1029.00   1029.00   1029.00   1025.00   1025.00   1029.00   1029.00   1029.00
435 RX    DISTANCE       .00     40.00     60.00     76.00     80.00     96.00    129.00    149.00

                                          ***

                                 COMPUTED STORAGE-OUTFLOW-ELEVATION DATA

        STORAGE        .00       .12       .29       .50       .75      1.05      1.39      1.77      2.19      2.66
        OUTFLOW        .00       .93      3.23      6.96     12.27     19.32     28.28     39.32     52.58     68.22
      ELEVATION    1025.00   1025.21   1025.42   1025.63   1025.84   1026.05   1026.26   1026.47   1026.68   1026.90

        STORAGE       3.17      3.72      4.32      4.96      5.64      6.37      7.14      7.95      8.80      9.71
        OUTFLOW      86.39    107.22    130.87    157.47    187.15    220.04    256.27    295.97    339.26    386.32
      ELEVATION    1027.11   1027.32   1027.53   1027.74   1027.95   1028.16   1028.37   1028.58   1028.79   1029.00

      ***          ***          ***          ***          ***

                   HYDROGRAPH AT STATION     RB259

  PEAK FLOW     TIME                       MAXIMUM AVERAGE FLOW
                                  6-HR        24-HR       72-HR      24.92-HR
+   (CFS)       (HR)
                         (CFS)
+    188.       13.75                 81.        24.         23.          23.
                      (INCHES)       .760       .895        .895         .895
                       (AC-FT)        40.        48.         48.          48.

 PEAK STORAGE   TIME                     MAXIMUM AVERAGE STORAGE
                                  6-HR        24-HR       72-HR      24.92-HR
+  (AC-FT)      (HR)
        3.      13.75                  1.         0.          0.           0.

 PEAK STAGE     TIME                     MAXIMUM AVERAGE STAGE
                                  6-HR        24-HR       72-HR      24.92-HR
+   (FEET)      (HR)
  1027.95       13.75             1026.92     1025.71     1025.68      1025.68

                   CUMULATIVE AREA =     1.00 SQ MI

*** *** *** *** *** *** *** *** *** *** *** *** *** *** *** *** *** *** *** *** *** *** *** *** *** *** *** *** *** *** *** *** *** ***

          **************
          *            *
437 KK    *   BR259C   *
          *            *
          **************
                      SUB-BASIN BR259C
                      24-HOUR SCS TYPE II RAINFALL WAS USED TO FIND TC & R FOR THIS BASIN
                      THIS BASIN USED RAINFALL REDUCTION FACTOR OF  .934
                        L = 1.90  Kb = .037  Adj. Slope =   19.0

           SUBBASIN RUNOFF DATA

442 BA      SUBBASIN CHARACTERISTICS
               TAREA        1.01  SUBBASIN AREA

            PRECIPITATION DATA

32 PB          STORM        3.92  BASIN TOTAL PRECIPITATION

32 PI         INCREMENTAL PRECIPITATION PATTERN
                .00       .00       .00       .00       .00       .00       .00       .00       .00       .00
                .00       .00       .00       .00       .00       .00       .00       .00       .00       .00
                .00       .00       .00       .00       .00       .00       .00       .00       .00       .00
                .00       .00       .00       .00       .00       .00       .00       .00       .00       .00
                .00       .00       .00       .00       .00       .00       .00       .00       .00       .00
                .00       .00       .00       .00       .00       .00       .00       .00       .00       .00
                .00       .00       .00       .00       .00       .00       .00       .00       .00       .00
                .00       .00       .00       .00       .00       .00       .00       .00       .00       .00
                .00       .00       .00       .00       .00       .00       .00       .00       .00       .00
                .00       .00       .00       .00       .00       .00       .00       .00       .00       .00
                .00       .00       .00       .00       .00       .00       .00       .00       .00       .00
                .00       .00       .00       .00       .00       .00       .00       .00       .00       .00
```



```
                .00       .00       .00       .00       .00       .00       .00       .01       .00       .01
                .01       .01       .01       .01       .01       .01       .01       .01       .03       .03
                .03       .09       .09       .09       .01       .01       .01       .01       .01       .01
                .01       .01       .01       .01       .01       .01       .00       .00       .00       .00
                .00       .00       .00       .00       .00       .00       .00       .00       .00       .00
                .00       .00       .00       .00       .00       .00       .00       .00       .00       .00
                .00       .00       .00       .00       .00       .00       .00       .00       .00       .00
                .00       .00       .00       .00       .00       .00       .00       .00       .00       .00
                .00       .00       .00       .00       .00       .00       .00       .00       .00       .00
                .00       .00       .00       .00       .00       .00       .00       .00       .00       .00
                .00       .00       .00       .00       .00       .00       .00       .00       .00       .00
                .00       .00       .00       .00       .00       .00       .00       .00       .00       .00
                .00       .00       .00       .00       .00       .00       .00       .00       .00       .00
                .00       .00       .00       .00       .00       .00       .00       .00       .00       .00
                .00       .00       .00       .00       .00       .00       .00       .00       .00       .00
                .00       .00       .00       .00       .00       .00       .00       .00       .00       .00
                .00       .00       .00       .00       .00       .00       .00       .00

443 LG        GREEN AND AMPT LOSS RATE
                 STRTL        .23  STARTING LOSS
                   DTH        .25  MOISTURE DEFICIT
                  PSIF       4.80  WETTING FRONT SUCTION
                 XKSAT        .36  HYDRAULIC CONDUCTIVITY
                 RTIMP      33.00  PERCENT IMPERVIOUS AREA

444 UC        CLARK UNITGRAPH
                    TC        .95  TIME OF CONCENTRATION
                     R        .58  STORAGE COEFFICIENT

445 UA        ACCUMULATED-AREA VS. TIME,  11 ORDINATES
                   .0       5.0      16.0      30.0      65.0      77.0      84.0      90.0      94.0      97.0
                100.0

                                          ***

                                      UNIT HYDROGRAPH PARAMETERS
                               CLARK   TC=    .95 HR,        R=   .58 HR
                              SNYDER   TP=    .50 HR,       CP=   .47

                                           UNIT HYDROGRAPH
                                      42 END-OF-PERIOD ORDINATES
             23.       89.      183.      337.      526.      620.      617.      593.      560.      518.
            477.      433.      382.      331.      287.      248.      215.      187.      162.      140.
            121.      105.       91.       79.       68.       59.       51.       45.       39.       33.
             29.       25.       22.       19.       16.       14.       12.       11.        9.        8.
              7.        6.

      ***          ***          ***          ***          ***

                   HYDROGRAPH AT STATION     BR259C

     TOTAL RAINFALL =     3.92, TOTAL LOSS =     1.88, TOTAL EXCESS =     2.04

  PEAK FLOW     TIME                       MAXIMUM AVERAGE FLOW
                                  6-HR        24-HR       72-HR      24.92-HR
+   (CFS)       (HR)
                         (CFS)
+    778.       12.42                180.        55.         53.          53.
                      (INCHES)      1.651      2.023       2.026        2.026
                       (AC-FT)        89.       109.        109.         109.

                   CUMULATIVE AREA =     1.01 SQ MI

*** *** *** *** *** *** *** *** *** *** *** *** *** *** *** *** *** *** *** *** *** *** *** *** *** *** *** *** *** *** *** *** *** ***

          **************
          *            *
447 KK    *   BR259R   *
          *            *
          **************
                      DIVERT RETENTION VOLUME
                      RELAXED RETENTION VOLUME FROM 68.3 AC-FT.

  DT          DIVERSION
                 ISTAD       RET259  DIVERSION HYDROGRAPH IDENTIFICATION
                DSTRMX        67.00  MAXIMUM VOLUME TO BE DIVERTED

  DI             INFLOW         .00   1000.00  10000.00

  DQ      DIVERTED FLOW         .00   1000.00  10000.00

                                          ***

      ***          ***          ***          ***          ***

                   DIVERSION HYDROGRAPH     RET259

  PEAK FLOW     TIME                       MAXIMUM AVERAGE FLOW
                                  6-HR        24-HR       72-HR      24.92-HR
+   (CFS)       (HR)
                         (CFS)
+    778.       12.42                124.        34.         33.          33.
```

```
                    (INCHES)      1.136       1.241       1.241       1.241
                    (AC-FT)         61.         67.         67.         67.

                    CUMULATIVE AREA =    1.01 SQ MI

     ***           ***           ***           ***           ***

                    HYDROGRAPH AT STATION   BR259R

  PEAK FLOW     TIME                    MAXIMUM AVERAGE FLOW
                                6-HR        24-HR       72-HR       24.92-HR
+   (CFS)       (HR)
                    (CFS)
+     456.     13.00                74.         21.         21.         21.
                    (INCHES)      .684        .784        .784        .784
                    (AC-FT)         37.         42.         42.         42.

                    CUMULATIVE AREA =    1.01 SQ MI


*** *** *** *** *** *** *** *** *** *** *** *** *** *** *** *** *** *** *** *** *** *** *** *** *** *** *** *** *** *** *** *** *** *** ***


          +++++++++++++++
          +             +
 453 KK   +    CB259S   +
          +             +
          +++++++++++++++
                    COMBINE FLOWS FROM THE SOUTH AT 59TH AVENUE

 455 HC           HYDROGRAPH COMBINATION
                       ICOMP           2  NUMBER OF HYDROGRAPHS TO COMBINE
                                                          ***

     ***           ***           ***           ***           ***

                    HYDROGRAPH AT STATION   CB259S

  PEAK FLOW     TIME                    MAXIMUM AVERAGE FLOW
                                6-HR        24-HR       72-HR       24.92-HR
+   (CFS)       (HR)
                    (CFS)
+     493.     13.00               156.         45.         44.         44.
                    (INCHES)      .721        .839        .839        .839
                    (AC-FT)         77.         90.         90.         90.

                    CUMULATIVE AREA =    2.01 SQ MI


*** *** *** *** *** *** *** *** *** *** *** *** *** *** *** *** *** *** *** *** *** *** *** *** *** *** *** *** *** *** *** *** *** *** ***


          +++++++++++++++
          +             +
 456 KK   +     CB259   +
          +             +
          +++++++++++++++
                    COMBINE NORTH AND SOUTH FLOWS

 458 HC           HYDROGRAPH COMBINATION
                       ICOMP           2  NUMBER OF HYDROGRAPHS TO COMBINE
                                                          ***

     ***           ***           ***           ***           ***

                    HYDROGRAPH AT STATION    CB259

  PEAK FLOW     TIME                    MAXIMUM AVERAGE FLOW
                                6-HR        24-HR       72-HR       24.92-HR
+   (CFS)       (HR)
                    (CFS)
+     685.     14.08               367.        122.        117.        117.
                    (INCHES)      .437        .580        .580        .580
                    (AC-FT)        182.        242.        242.        242.

                    CUMULATIVE AREA =    7.81 SQ MI


*** *** *** *** *** *** *** *** *** *** *** *** *** *** *** *** *** *** *** *** *** *** *** *** *** *** *** *** *** *** *** *** *** *** ***


          +++++++++++++++
          +             +
 459 KK   +    RBR163    +
          +             +
          +++++++++++++++
                    ROUTE FLOW FROM COMPUTATION POINT CB1591 TO COMPUTATION POINT CB163C
```



```
                    MARICOPA DRAIN FROM 59TH AVE. TO 63RD AVE.
                    ADJUST THE SLOPE FROM .0011 TO REFLECT A VELOCITY OF LESS THAN 5 FT/SEC

              HYDROGRAPH ROUTING DATA

 463 RS         STORAGE ROUTING
                      NSTPS          2  NUMBER OF SUBREACHES
                      ITYP       ELEV   TYPE OF INITIAL CONDITION
                     RSVRIC      -1.00  INITIAL CONDITION
                          X        .00  WORKING R AND D COEFFICIENT

 464 RC         NORMAL DEPTH CHANNEL
                       ANL        .030  LEFT OVERBANK N-VALUE
                      ANCH        .030  MAIN CHANNEL N-VALUE
                       ANR        .030  RIGHT OVERBANK N-VALUE
                      RLNTH      2640.  REACH LENGTH
                       SEL       .0009  ENERGY SLOPE
                      ELMAX         .0  MAX. ELEV. FOR STORAGE/OUTFLOW CALCULATION

                                CROSS-SECTION DATA
                                --- LEFT OVERBANK --- + ------ MAIN CHANNEL ------- + --- RIGHT OVERBANK ---
 466 RY         ELEVATION    997.80    997.70    997.60    992.60    992.60    997.60    997.70    997.80
 465 RX         DISTANCE        .00     10.00     20.00     45.00    135.00    160.00    170.00    180.00

                                                ***

                          COMPUTED STORAGE-OUTFLOW-ELEVATION DATA

                STORAGE        .00      1.52      3.08      4.68      6.33      8.03      9.77     11.56     13.40     15.27
                OUTFLOW        .00     15.54     49.60     98.00    159.15    232.14    316.38    411.46    517.10    633.10
              ELEVATION     992.60    992.87    993.15    993.42    993.69    993.97    994.24    994.52    994.79    995.06

                STORAGE      17.20     19.17     21.18     23.24     25.35     27.50     29.70     31.94     34.22     36.79
                OUTFLOW     759.30    895.61   1041.96   1198.29   1364.60   1540.88   1727.13   1923.38   2129.66   2368.55
              ELEVATION     995.34    995.61    995.88    996.16    996.43    996.71    996.98    997.25    997.53    997.80

     ***           ***           ***           ***           ***

                    HYDROGRAPH AT STATION    RBR163

  PEAK FLOW     TIME                    MAXIMUM AVERAGE FLOW
                                6-HR        24-HR       72-HR       24.92-HR
+   (CFS)       (HR)
                    (CFS)
+     677.     14.17               364.        120.        115.        115.
                    (INCHES)      .433        .569        .569        .569
                    (AC-FT)        180.        237.        237.        237.

 PEAK STORAGE   TIME                    MAXIMUM AVERAGE STORAGE
                                6-HR        24-HR       72-HR       24.92-HR
+  (AC-FT)      (HR)
                    8.       14.17                5.          2.          2.          2.

  PEAK STAGE    TIME                    MAXIMUM AVERAGE STAGE
                                6-HR        24-HR       72-HR       24.92-HR
+   (FEET)      (HR)
                  995.16     14.17              994.33      993.27      993.25      993.25

                    CUMULATIVE AREA =    7.81 SQ MI


*** *** *** *** *** *** *** *** *** *** *** *** *** *** *** *** *** *** *** *** *** *** *** *** *** *** *** *** *** *** *** *** *** *** ***


          +++++++++++++++
          +             +
 467 KK   +    BR263C   +
          +             +
          +++++++++++++++
                    SUB-BASIN BR263C
                    24-HOUR SCS TYPE II RAINFALL WAS USED TO FIND TC & R FOR THIS BASIN
                    THIS BASIN USED RAINFALL REDUCTION FACTOR OF  .934
                      L = 1.45  Kb = .057  Adj. Slope =   19.0

              SUBBASIN RUNOFF DATA

 472 BA         SUBBASIN CHARACTERISTICS
                      TAREA         .49  SUBBASIN AREA

              PRECIPITATION DATA

 32 PB                STORM        3.92  BASIN TOTAL PRECIPITATION

 32 PI          INCREMENTAL PRECIPITATION PATTERN
                    .00       .00       .00       .00       .00       .00       .00       .00       .00       .00
                    .00       .00       .00       .00       .00       .00       .00       .00       .00       .00
                    .00       .00       .00       .00       .00       .00       .00       .00       .00       .00
                    .00       .00       .00       .00       .00       .00       .00       .00       .00       .00
                    .00       .00       .00       .00       .00       .00       .00       .00       .00       .00
                    .00       .00       .00       .00       .00       .00       .00       .00       .00       .00
                    .00       .00       .00       .00       .00       .00       .00       .00       .00       .00
                    .00       .00       .00       .00       .00       .00       .00       .00       .00       .00
                    .00       .00       .00       .00       .00       .00       .00       .00       .00       .00
```

.00	.00	.00	.00	.00	.00	.00	.00	.00	.00
.00	.00	.00	.00	.00	.00	.00	.00	.00	.00
.00	.00	.00	.00	.00	.00	.00	.00	.00	.00
.00	.00	.00	.00	.00	.00	.00	.01	.00	.01
.01	.01	.01	.01	.01	.01	.01	.01	.03	.03
.03	.09	.09	.09	.01	.01	.01	.01	.01	.01
.01	.01	.01	.01	.01	.01	.00	.00	.00	.00
.00	.00	.00	.00	.00	.00	.00	.00	.00	.00
.00	.00	.00	.00	.00	.00	.00	.00	.00	.00
.00	.00	.00	.00	.00	.00	.00	.00	.00	.00
.00	.00	.00	.00	.00	.00	.00	.00	.00	.00
.00	.00	.00	.00	.00	.00	.00	.00	.00	.00
.00	.00	.00	.00	.00	.00	.00	.00	.00	.00
.00	.00	.00	.00	.00	.00	.00	.00	.00	.00
.00	.00	.00	.00	.00	.00	.00	.00	.00	.00
.00	.00	.00	.00	.00	.00	.00	.00	.00	.00
.00	.00	.00	.00	.00	.00	.00	.00	.00	.00
.00	.00	.00	.00	.00	.00	.00	.00	.00	.00
.00	.00	.00	.00	.00	.00	.00	.00	.00	.00
.00	.00	.00	.00	.00	.00	.00	.00		

```
473 LG       GREEN AND AMPT LOSS RATE
                  STRTL          .11  STARTING LOSS
                    DTH          .25  MOISTURE DEFICIT
                   PSIF         4.70  WETTING FRONT SUCTION
                  XKSAT          .48  HYDRAULIC CONDUCTIVITY
                  RTIMP        38.00  PERCENT IMPERVIOUS AREA

474 UC       CLARK UNITGRAPH
                     TC         1.10  TIME OF CONCENTRATION
                      R          .83  STORAGE COEFFICIENT

475 UA       ACCUMULATED-AREA VS. TIME,  11 ORDINATES
                     .0       5.0      16.0      30.0      65.0      77.0      84.0      90.0      94.0      97.0
                  100.0
                                                                ***

                                                    UNIT HYDROGRAPH PARAMETERS
                                              CLARK   TC=  1.10 HR,        R=   .83 HR
                                              SNYDER  TP=   .61 HR,       CP=   .43

                                                        UNIT HYDROGRAPH
                                                    59 END-OF-PERIOD ORDINATES
```

7.	26.	52.	84.	144.	205.	225.	227.	223.	217.
207.	196.	186.	173.	158.	143.	129.	117.	106.	96.
86.	78.	71.	64.	58.	52.	47.	43.	39.	35.
32.	29.	26.	23.	21.	19.	17.	16.	14.	13.
12.	11.	9.	9.	8.	7.	6.	6.	5.	5.
4.	4.	3.	3.	3.	3.	2.	2.	2.	

```
      ***          ***          ***          ***          ***

                          HYDROGRAPH AT STATION   BR263C

   TOTAL RAINFALL =    3.92, TOTAL LOSS =    1.80, TOTAL EXCESS =    2.12

  PEAK FLOW      TIME                         MAXIMUM AVERAGE FLOW
                                      6-HR        24-HR        72-HR      24.92-HR
+   (CFS)        (HR)
                             (CFS)
+    294.       12.50                  89.          28.          27.          27.
                          (INCHES)   1.671        2.104        2.106        2.106
                           (AC-FT)     44.          55.          55.          55.

                          CUMULATIVE AREA =     .49 SQ MI


*** *** *** *** *** *** *** *** *** *** *** *** *** *** *** *** *** *** *** *** *** *** *** *** *** *** *** *** *** *** *** *** *** ***


             **************
             *            *
477 KK       *   BR263R   *
             *            *
             **************
                       DIVERT RETENTION VOLUME
                       RELAXED RETENTION VOLUME FROM 32.0 AC-FT.

    DT          DIVERSION
                      ISTAD         RET263   DIVERSION HYDROGRAPH IDENTIFICATION
                     DSTRMX          29.30   MAXIMUM VOLUME TO BE DIVERTED

    DI              INFLOW            .00    1000.00   10000.00

    DQ      DIVERTED FLOW             .00    1000.00   10000.00
                                                                ***

      ***          ***          ***          ***          ***

                          DIVERSION HYDROGRAPH   RET263

  PEAK FLOW      TIME                         MAXIMUM AVERAGE FLOW
```



```
                                      6-HR        24-HR        72-HR      24.92-HR
+   (CFS)        (HR)
                             (CFS)
+    294.       12.50                  53.          15.          14.          14.
                          (INCHES)    .996        1.112        1.112        1.112
                           (AC-FT)     26.          29.          29.          29.

                          CUMULATIVE AREA =     .49 SQ MI


      ***          ***          ***          ***          ***

                          HYDROGRAPH AT STATION   BR263R

  PEAK FLOW      TIME                         MAXIMUM AVERAGE FLOW
                                      6-HR        24-HR        72-HR      24.92-HR
+   (CFS)        (HR)
                             (CFS)
+    218.       13.08                  47.          13.          13.          13.
                          (INCHES)    .876         .994         .994         .994
                           (AC-FT)     23.          26.          26.          26.

                          CUMULATIVE AREA =     .49 SQ MI


*** *** *** *** *** *** *** *** *** *** *** *** *** *** *** *** *** *** *** *** *** *** *** *** *** *** *** *** *** *** *** *** *** ***


             **************
             *            *
483 KK       *     63S    *
             *            *
             **************
                       COMBINE ROUTED FLOW FROM COMPUTATION POINT CB159C WITH RUNOFF FROM SUB-BASINS
                       BR163C AND BR263C AND ROUTED FLOW FROM COMPUTATION POINT  CB259C

486 HC       HYDROGRAPH COMBINATION
                  ICOMP            2  NUMBER OF HYDROGRAPHS TO COMBINE
                                                                ***

      ***          ***          ***          ***          ***

                          HYDROGRAPH AT STATION      63S

  PEAK FLOW      TIME                         MAXIMUM AVERAGE FLOW
                                      6-HR        24-HR        72-HR      24.92-HR
+   (CFS)        (HR)
                             (CFS)
+    757.       14.08                 410.         133.         128.         128.
                          (INCHES)    .458         .594         .594         .594
                           (AC-FT)    203.         263.         263.         263.

                          CUMULATIVE AREA =    8.31 SQ MI


*** *** *** *** *** *** *** *** *** *** *** *** *** *** *** *** *** *** *** *** *** *** *** *** *** *** *** *** *** *** *** *** *** ***


             **************
             *            *
487 KK       *   BR163C   *
             *            *
             **************
                       SUB-BASIN BR163C
                       24-HOUR SCS TYPE II RAINFALL WAS USED TO FIND TC & R FOR THIS BASIN
                       THIS BASIN USED RAINFALL REDUCTION FACTOR OF  .934
                          L =  .91  Kb = .040  Adj. Slope =     9.0

             SUBBASIN RUNOFF DATA

492 BA         SUBBASIN CHARACTERISTICS
                  TAREA          .25  SUBBASIN AREA

               PRECIPITATION DATA

32 PB             STORM         3.92  BASIN TOTAL PRECIPITATION

32 PI            INCREMENTAL PRECIPITATION PATTERN
```

.00	.00	.00	.00	.00	.00	.00	.00	.00	.00
.00	.00	.00	.00	.00	.00	.00	.00	.00	.00
.00	.00	.00	.00	.00	.00	.00	.00	.00	.00
.00	.00	.00	.00	.00	.00	.00	.00	.00	.00
.00	.00	.00	.00	.00	.00	.00	.00	.00	.00
.00	.00	.00	.00	.00	.00	.00	.00	.00	.00
.00	.00	.00	.00	.00	.00	.00	.00	.00	.00
.00	.00	.00	.00	.00	.00	.00	.00	.00	.00
.00	.00	.00	.00	.00	.00	.00	.00	.00	.00
.00	.00	.00	.00	.00	.00	.00	.00	.00	.00
.00	.00	.00	.00	.00	.00	.00	.00	.00	.00
.00	.00	.00	.00	.00	.00	.00	.00	.00	.00
.00	.00	.00	.00	.00	.00	.00	.01	.00	.01

.01	.01	.01	.01	.01	.01	.01	.01	.03	.03
.03	.09	.09	.09	.01	.01	.01	.01	.01	.01
.01	.01	.01	.01	.01	.01	.00	.00	.00	.00
.00	.00	.00	.00	.00	.00	.00	.00	.00	.00
.00	.00	.00	.00	.00	.00	.00	.00	.00	.00
.00	.00	.00	.00	.00	.00	.00	.00	.00	.00
.00	.00	.00	.00	.00	.00	.00	.00	.00	.00
.00	.00	.00	.00	.00	.00	.00	.00	.00	.00
.00	.00	.00	.00	.00	.00	.00	.00	.00	.00
.00	.00	.00	.00	.00	.00	.00	.00	.00	.00
.00	.00	.00	.00	.00	.00	.00	.00	.00	.00
.00	.00	.00	.00	.00	.00	.00	.00	.00	.00
.00	.00	.00	.00	.00	.00	.00	.00	.00	.00
.00	.00	.00	.00	.00	.00	.00	.00	.00	.00
.00	.00	.00	.00	.00	.00	.00	.00	.00	.00
.00	.00	.00	.00	.00	.00	.00	.00		

```
493 LG      GREEN AND AMPT LOSS RATE
                  STRTL        .22  STARTING LOSS
                    DTH        .25  MOISTURE DEFICIT
                   PSIF       5.40  WETTING FRONT SUCTION
                  XKSAT        .24  HYDRAULIC CONDUCTIVITY
                  RTIMP      21.00  PERCENT IMPERVIOUS AREA

494 UC      CLARK UNITGRAPH
                     TC        .81  TIME OF CONCENTRATION
                      R        .59  STORAGE COEFFICIENT

495 UA      ACCUMULATED-AREA VS. TIME,  11 ORDINATES
                 .0       5.0      16.0      30.0      65.0      77.0      84.0      90.0      94.0      97.0
              100.0

                                            ***

                                 UNIT HYDROGRAPH PARAMETERS
                              CLARK   TC=   .81 HR,        R=   .59 HR
                             SNYDER   TP=   .44 HR,       CP=   .44

                                      UNIT HYDROGRAPH
                                  42 END-OF-PERIOD ORDINATES
            7.        28.       61.      117.      160.      163.      158.      150.      139.      128.
          114.        99.       86.       74.       65.       56.       49.       42.       37.       32.
           28.        24.       21.       18.       16.       14.       12.       10.        9.        8.
            7.         6.        5.        4.        4.        3.        3.        2.        2.        2.
            2.         1.

    ***            ***            ***            ***            ***

                        HYDROGRAPH AT STATION    BR163C

   TOTAL RAINFALL =    3.92, TOTAL LOSS =    2.10, TOTAL EXCESS =    1.82

  PEAK FLOW     TIME                      MAXIMUM AVERAGE FLOW
                                  6-HR        24-HR       72-HR    24.92-HR
+  (CFS)        (HR)
                        (CFS)
+     208.     12.33                43.         12.         12.         12.
                      (INCHES)   1.570       1.807       1.809       1.809
                       (AC-FT)      21.         25.         25.         25.

                        CUMULATIVE AREA =      .25 SQ MI


*** *** *** *** *** *** *** *** *** *** *** *** *** *** *** *** *** *** *** *** *** *** *** *** *** *** *** *** *** *** *** *** ***


             **************
             *            *
497 KK       *   BR163R   *
             *            *
             **************
                         DIVERT RETENTION VOLUME

  DT          DIVERSION
                     ISTAD       RET163  DIVERSION HYDROGRAPH IDENTIFICATION
                    DSTRMX         6.60  MAXIMUM VOLUME TO BE DIVERTED

  DI                INFLOW          .00   1000.00  10000.00

  DQ        DIVERTED FLOW           .00   1000.00  10000.00

                                            ***

    ***            ***            ***            ***            ***

                       DIVERSION HYDROGRAPH   RET163

  PEAK FLOW     TIME                      MAXIMUM AVERAGE FLOW
                                  6-HR        24-HR       72-HR    24.92-HR
+  (CFS)        (HR)
                        (CFS)
+     163.     12.17                12.          3.          3.          3.
                      (INCHES)    .427        .485        .485        .485
                       (AC-FT)       6.          7.          7.          7.
```



```
                        CUMULATIVE AREA =      .25 SQ MI

    ***            ***            ***            ***            ***

                         HYDROGRAPH AT STATION    BR163R

  PEAK FLOW     TIME                      MAXIMUM AVERAGE FLOW
                                  6-HR        24-HR       72-HR    24.92-HR
+  (CFS)        (HR)
                        (CFS)
+     208.     12.33                34.          9.          9.          9.
                      (INCHES)   1.250       1.323       1.323       1.323
                       (AC-FT)      17.         18.         18.         18.

                        CUMULATIVE AREA =      .25 SQ MI


*** *** *** *** *** *** *** *** *** *** *** *** *** *** *** *** *** *** *** *** *** *** *** *** *** *** *** *** *** *** *** *** ***


             **************
             *            *
502 KK       *   CB163    *
             *            *
             **************
                   COMBINE FLOWS ON THE SOUTH SIDE OF BASELINE

504 HC          HYDROGRAPH COMBINATION
                      ICOMP            2  NUMBER OF HYDROGRAPHS TO COMBINE

                                            ***

    ***            ***            ***            ***            ***

                         HYDROGRAPH AT STATION     CB163

  PEAK FLOW     TIME                      MAXIMUM AVERAGE FLOW
                                  6-HR        24-HR       72-HR    24.92-HR
+  (CFS)        (HR)
                        (CFS)
+     780.     14.08               427.        142.        137.        137.
                      (INCHES)    .464        .616        .616        .616
                       (AC-FT)     212.        281.        281.        281.

                        CUMULATIVE AREA =     8.56 SQ MI


*** *** *** *** *** *** *** *** *** *** *** *** *** *** *** *** *** *** *** *** *** *** *** *** *** *** *** *** *** *** *** *** ***


             **************
             *            *
505 KK       *   RCD1C    *
             *            *
             **************
                   ROUTE FLOW FROM COMPUTATION POINT CB163C TO COMPUTATION POINT CPCD1C
                   MARICOPA DRAIN FROM 63RD AVE TO 67TH AVE.

             HYDROGRAPH ROUTING DATA

508 RS          STORAGE ROUTING
                      NSTPS            2  NUMBER OF SUBREACHES
                       ITYP         ELEV  TYPE OF INITIAL CONDITION
                     RSVRIC        -1.00  INITIAL CONDITION
                          X          .00  WORKING R AND D COEFFICIENT

509 RC          NORMAL DEPTH CHANNEL
                        ANL         .030  LEFT OVERBANK N-VALUE
                       ANCH         .030  MAIN CHANNEL N-VALUE
                        ANR         .030  RIGHT OVERBANK N-VALUE
                      RLNTH        2640.  REACH LENGTH
                        SEL        .0011  ENERGY SLOPE
                      ELMAX           .0  MAX. ELEV. FOR STORAGE/OUTFLOW CALCULATION

                                       CROSS-SECTION DATA
                     --- LEFT OVERBANK --- + ------ MAIN CHANNEL ------- + --- RIGHT OVERBANK ---
511 RY       ELEVATION   996.20    996.10    996.00    991.00    991.00    996.00    996.10    996.20
510 RX        DISTANCE      .00     10.00     20.00     45.00    135.00    160.00    170.00    180.00

                                            ***

                              COMPUTED STORAGE-OUTFLOW-ELEVATION DATA
```

STORAGE	.00	1.52	3.08	4.68	6.33	8.03	9.77	11.56	13.40	15.27
OUTFLOW	.00	17.19	54.83	108.35	175.95	256.64	349.77	454.89	571.68	699.92
ELEVATION	991.00	991.27	991.55	991.82	992.09	992.37	992.64	992.92	993.19	993.46
STORAGE	17.20	19.17	21.18	23.24	25.35	27.50	29.70	31.94	34.22	36.79
OUTFLOW	839.44	990.14	1151.93	1324.76	1508.63	1703.51	1909.42	2126.38	2354.43	2618.53
ELEVATION	993.74	994.01	994.28	994.56	994.83	995.11	995.38	995.65	995.93	996.20

```
      ***           ***           ***           ***           ***

                    HYDROGRAPH AT STATION     RCD1C

 PEAK FLOW       TIME                         MAXIMUM AVERAGE FLOW
                                    6-HR        24-HR        72-HR     24.92-HR
+   (CFS)        (HR)
                         (CFS)
+     775.      14.25                425.        140.         135.         135.
                      (INCHES)      .462        .607         .607         .607
                       (AC-FT)      211.        277.         277.         277.

 PEAK STORAGE    TIME                        MAXIMUM AVERAGE STORAGE
                                    6-HR        24-HR        72-HR     24.92-HR
+  (AC-FT)       (HR)
        8.      14.25                  5.          2.           2.           2.

 PEAK STAGE      TIME                         MAXIMUM AVERAGE STAGE
                                    6-HR        24-HR        72-HR     24.92-HR
+   (FEET)       (HR)
    993.61      14.25             992.78      991.69       991.67       991.67

                     CUMULATIVE AREA =      8.56 SQ MI


*** *** *** *** *** *** *** *** *** *** *** *** *** *** *** *** *** *** *** *** *** *** *** *** *** *** *** *** *** *** *** *** ***


               **************
               *            *
  512 KK       *    BR67C   *
               *            *
               **************
                            SUB-BASIN BR67C
                            24-HOUR SCS TYPE II RAINFALL WAS USED TO FIND TC & R FOR THIS BASIN
                            THIS BASIN USED RAINFALL REDUCTION FACTOR OF  .934
                              L =  .79  Kb = .054  Adj. Slope =    5.0

                   SUBBASIN RUNOFF DATA

  517 BA             SUBBASIN CHARACTERISTICS
                           TAREA         .13  SUBBASIN AREA

                     PRECIPITATION DATA

   32 PB                   STORM        3.92  BASIN TOTAL PRECIPITATION

   32 PI               INCREMENTAL PRECIPITATION PATTERN
                          .00      .00      .00      .00      .00      .00      .00      .00      .00      .00
                          .00      .00      .00      .00      .00      .00      .00      .00      .00      .00
                          .00      .00      .00      .00      .00      .00      .00      .00      .00      .00
                          .00      .00      .00      .00      .00      .00      .00      .00      .00      .00
                          .00      .00      .00      .00      .00      .00      .00      .00      .00      .00
                          .00      .00      .00      .00      .00      .00      .00      .00      .00      .00
                          .00      .00      .00      .00      .00      .00      .00      .00      .00      .00
                          .00      .00      .00      .00      .00      .00      .00      .00      .00      .00
                          .00      .00      .00      .00      .00      .00      .00      .00      .00      .00
                          .00      .00      .00      .00      .00      .00      .00      .00      .00      .00
                          .00      .00      .00      .00      .00      .00      .00      .00      .00      .00
                          .00      .00      .00      .00      .00      .00      .00      .00      .00      .00
                          .00      .00      .00      .00      .00      .00      .00      .01      .00      .01
                          .01      .01      .01      .01      .01      .01      .01      .01      .03      .03
                          .03      .09      .09      .09      .01      .01      .01      .01      .01      .01
                          .01      .01      .01      .01      .01      .01      .00      .00      .00      .00
                          .00      .00      .00      .00      .00      .00      .00      .00      .00      .00
                          .00      .00      .00      .00      .00      .00      .00      .00      .00      .00
                          .00      .00      .00      .00      .00      .00      .00      .00      .00      .00
                          .00      .00      .00      .00      .00      .00      .00      .00      .00      .00
                          .00      .00      .00      .00      .00      .00      .00      .00      .00      .00
                          .00      .00      .00      .00      .00      .00      .00      .00      .00      .00
                          .00      .00      .00      .00      .00      .00      .00      .00      .00      .00
                          .00      .00      .00      .00      .00      .00      .00      .00      .00      .00
                          .00      .00      .00      .00      .00      .00      .00      .00      .00      .00
                          .00      .00      .00      .00      .00      .00      .00      .00      .00      .00
                          .00      .00      .00      .00      .00      .00      .00      .00      .00      .00
                          .00      .00      .00      .00      .00      .00      .00      .00      .00      .00
                          .00      .00      .00      .00      .00      .00      .00      .00

  518 LG             GREEN AND AMPT LOSS RATE
                          STRTL        .30  STARTING LOSS
                            DTH        .15  MOISTURE DEFICIT
                           PSIF       7.00  WETTING FRONT SUCTION
                          XKSAT        .14  HYDRAULIC CONDUCTIVITY
                          RTIMP      15.00  PERCENT IMPERVIOUS AREA

  519 UC .           CLARK UNITGRAPH
                             TC       1.16  TIME OF CONCENTRATION
                              R       1.17  STORAGE COEFFICIENT

  520 UA             ACCUMULATED-AREA VS. TIME,  11 ORDINATES
                          .0       5.0      16.0      30.0      65.0      77.0      84.0      90.0      94.0      97.0
                       100.0
```



```
                                               ***

                                   UNIT HYDROGRAPH PARAMETERS
                               CLARK   TC=  1.16 HR,        R=  1.17 HR
                              SNYDER   TP=   .72 HR,       CP=   .39

                                         UNIT HYDROGRAPH
                                   81 END-OF-PERIOD ORDINATES
              1.         4.         9.        15.        24.        36.        43.        45.        45.        45.
             44.        43.        41.        40.        38.        35.        33.        30.        28.        26.
             25.        23.        21.        20.        19.        17.        16.        15.        14.        13.
             12.        11.        10.        10.         9.         8.         8.         7.         7.         6.
              6.         6.         5.         5.         4.         4.         4.         4.         3.         3.
              3.         3.         3.         2.         2.         2.         2.         2.         2.         2.
              1.         1.         1.         1.         1.         1.         1.         1.         1.         1.
              1.         1.         1.         1.         1.         0.         0.         0.         0.         0.
              0.

      ***           ***           ***           ***           ***

                    HYDROGRAPH AT STATION     BR67C

    TOTAL RAINFALL =    3.92, TOTAL LOSS =    2.04, TOTAL EXCESS =    1.88

 PEAK FLOW       TIME                         MAXIMUM AVERAGE FLOW
                                    6-HR        24-HR        72-HR     24.92-HR
+   (CFS)        (HR)
                         (CFS)
+      67.      12.67                 23.          6.           6.           6.
                      (INCHES)     1.679       1.867        1.868        1.868
                       (AC-FT)       11.         13.          13.          13.

                     CUMULATIVE AREA =       .13 SQ MI


*** *** *** *** *** *** *** *** *** *** *** *** *** *** *** *** *** *** *** *** *** *** *** *** *** *** *** *** *** *** *** *** ***


               **************
               *            *
  522 KK       *   RCD1C2   *
               *            *
               **************
                            ROUTE FLOW FROM SUBASIN BR67C TO COMPUTATION POINT CPCD1C
                           CROSS-SECTION WAS REVISED TO REFLECT URBANIZED CONDITIONS

                   HYDROGRAPH ROUTING DATA

  525 RS             STORAGE ROUTING
                          NSTPS            1  NUMBER OF SUBREACHES
                           ITYP         ELEV  TYPE OF INITIAL CONDITION
                         RSVRIC        -1.00  INITIAL CONDITION
                              X          .00 WORKING R AND D COEFFICIENT

  526 RC             NORMAL DEPTH CHANNEL
                            ANL         .035  LEFT OVERBANK N-VALUE
                           ANCH         .035  MAIN CHANNEL N-VALUE
                            ANR         .035  RIGHT OVERBANK N-VALUE
                          RLNTH        2100.  REACH LENGTH
                            SEL        .0014  ENERGY SLOPE
                          ELMAX           .0  MAX. ELEV. FOR STORAGE/OUTFLOW CALCULATION

                                          CROSS-SECTION DATA
                         --- LEFT OVERBANK --- + ------ MAIN CHANNEL ------- + --- RIGHT OVERBANK ---
  528 RY         ELEVATION    994.00    993.00    992.00    989.00    989.00    992.00    993.00    994.00
  527 RX          DISTANCE       .00     40.00     60.00     65.00     75.00     80.00    100.00    140.00
                                                 ***

                                    COMPUTED STORAGE-OUTFLOW-ELEVATION DATA

              STORAGE       .00       .13       .28       .43       .60       .77       .96      1.16      1.37      1.59
              OUTFLOW       .00      1.73      5.55     11.04     18.07     26.60     36.59     48.07     61.05     75.55
            ELEVATION    989.00    989.26    989.53    989.79    990.05    990.32    990.58    990.84    991.11    991.37

              STORAGE      1.83      2.07      2.35      2.75      3.28      3.95      4.79      5.90      7.28      8.92
              OUTFLOW     91.59    109.22    130.84    157.36    188.99    227.04    270.75    325.51    393.94    478.03
            ELEVATION    991.63    991.90    992.16    992.42    992.68    992.95    993.21    993.47    993.74    994.00


      ***           ***           ***           ***           ***

                    HYDROGRAPH AT STATION     RCD1C2

 PEAK FLOW       TIME                         MAXIMUM AVERAGE FLOW
                                    6-HR        24-HR        72-HR     24.92-HR
+   (CFS)        (HR)
                         (CFS)
+      63.      12.92                 23.          6.           6.           6.
                      (INCHES)     1.673       1.862        1.862        1.862
                       (AC-FT)       11.         13.          13.          13.

 PEAK STORAGE    TIME                        MAXIMUM AVERAGE STORAGE
```

+ (AC-FT)	(HR)	6-HR	24-HR	72-HR	24.92-HR
1.	12.92	1.	0.	0.	0.

PEAK STAGE	TIME	MAXIMUM AVERAGE STAGE			
		6-HR	24-HR	72-HR	24.92-HR
+ (FEET)	(HR)				
991.14	12.92	990.08	989.37	989.35	989.35

CUMULATIVE AREA = .13 SQ MI

*** ***

529 KK CD1C

SUB-BASIN CD1C
24-HOUR SCS TYPE II RAINFALL WAS USED TO FIND TC & R FOR THIS BASIN
THIS BASIN USED RAINFALL REDUCTION FACTOR OF .934
L = .90 Kb = .049 Adj. Slope = 27.0

SUBBASIN RUNOFF DATA

534 BA SUBBASIN CHARACTERISTICS
TAREA .46 SUBBASIN AREA

PRECIPITATION DATA

32 PB STORM 3.92 BASIN TOTAL PRECIPITATION

32 PI INCREMENTAL PRECIPITATION PATTERN

.00	.00	.00	.00	.00	.00	.00	.00	.00	.00
.00	.00	.00	.00	.00	.00	.00	.00	.00	.00
.00	.00	.00	.00	.00	.00	.00	.00	.00	.00
.00	.00	.00	.00	.00	.00	.00	.00	.00	.00
.00	.00	.00	.00	.00	.00	.00	.00	.00	.00
.00	.00	.00	.00	.00	.00	.00	.00	.00	.00
.00	.00	.00	.00	.00	.00	.00	.00	.00	.00
.00	.00	.00	.00	.00	.00	.00	.00	.00	.00
.00	.00	.00	.00	.00	.00	.00	.01	.00	.01
.01	.01	.01	.01	.01	.01	.01	.01	.03	.03
.03	.09	.09	.09	.01	.01	.01	.01	.01	.01
.01	.01	.01	.01	.01	.01	.00	.00	.00	.00
.00	.00	.00	.00	.00	.00	.00	.00	.00	.00
.00	.00	.00	.00	.00	.00	.00	.00	.00	.00
.00	.00	.00	.00	.00	.00	.00	.00	.00	.00
.00	.00	.00	.00	.00	.00	.00	.00	.00	.00
.00	.00	.00	.00	.00	.00	.00	.00	.00	.00
.00	.00	.00	.00	.00	.00	.00	.00	.00	.00
.00	.00	.00	.00	.00	.00	.00	.00	.00	.00
.00	.00	.00	.00	.00	.00	.00	.00	.00	.00
.00	.00	.00	.00	.00	.00	.00	.00	.00	.00
.00	.00	.00	.00	.00	.00	.00	.00	.00	.00
.00	.00	.00	.00	.00	.00	.00	.00	.00	.00
.00	.00	.00	.00	.00	.00	.00	.00	.00	.00

535 LG GREEN AND AMPT LOSS RATE

STRTL	.19	STARTING LOSS
DTH	.25	MOISTURE DEFICIT
PSIF	4.70	WETTING FRONT SUCTION
XKSAT	.41	HYDRAULIC CONDUCTIVITY
RTIMP	30.00	PERCENT IMPERVIOUS AREA

536 UC CLARK UNITGRAPH

TC	.58	TIME OF CONCENTRATION
R	.29	STORAGE COEFFICIENT

537 UA ACCUMULATED-AREA VS. TIME, 11 ORDINATES

.0	5.0	16.0	30.0	65.0	77.0	84.0	90.0	94.0	97.0
100.0									

***

UNIT HYDROGRAPH PARAMETERS

CLARK	TC= .58 HR,	R=	.29 HR
SNYDER	TP= .32 HR,	CP=	.57

UNIT HYDROGRAPH
22 END-OF-PERIOD ORDINATES

44.	159.	384.	532.	498.	435.	368.	295.	221.	165.
124.	93.	69.	52.	39.	29.	22.	16.	12.	9.
7.	5.								

*** *** *** *** ***

HYDROGRAPH AT STATION CD1C

TOTAL RAINFALL = 3.92, TOTAL LOSS = 2.00, TOTAL EXCESS = 1.93

PEAK FLOW	TIME	MAXIMUM AVERAGE FLOW			
		6-HR	24-HR	72-HR	24.92-HR
+ (CFS)	(HR)				
		(CFS)			
+ 552.	12.25	79.	24.	23.	23.
		(INCHES) 1.577	1.916	1.918	1.918
		(AC-FT) 39.	47.	47.	47.

CUMULATIVE AREA = .46 SQ MI

*** ***

539 KK CD1R

DIVERT RETENTION VOLUME

DT	DIVERSION	ISTAD	RET1C	DIVERSION HYDROGRAPH IDENTIFICATION	
		DSTRMX	32.00	MAXIMUM VOLUME TO BE DIVERTED	
DI	INFLOW		.00	1000.00	10000.00
DQ	DIVERTED FLOW		.00	1000.00	10000.00

***

*** *** *** *** ***

DIVERSION HYDROGRAPH RET1C

PEAK FLOW	TIME	MAXIMUM AVERAGE FLOW			
		6-HR	24-HR	72-HR	24.92-HR
+ (CFS)	(HR)				
		(CFS)			
+ 552.	12.25	60.	16.	16.	16.
		(INCHES) 1.195	1.293	1.293	1.293
		(AC-FT) 30.	32.	32.	32.

CUMULATIVE AREA = .46 SQ MI

*** *** *** *** ***

HYDROGRAPH AT STATION CD1R

PEAK FLOW	TIME	MAXIMUM AVERAGE FLOW			
		6-HR	24-HR	72-HR	24.92-HR
+ (CFS)	(HR)				
		(CFS)			
+ 259.	12.58	27.	8.	8.	8.
		(INCHES) .534	.625	.625	.625
		(AC-FT) 13.	15.	15.	15.

CUMULATIVE AREA = .46 SQ MI

*** ***

544 KK CPCD1C

COMBINE ROUTED FLOWS FROM COMPUTATION POINT CB163C AND SUB-BASIN BR67C
WITH RUNOFF FROM SUB-BASIN CD1C

547 HC HYDROGRAPH COMBINATION
ICOMP 3 NUMBER OF HYDROGRAPHS TO COMBINE

***

*** *** *** *** ***

HYDROGRAPH AT STATION CPCD1C

PEAK FLOW	TIME	MAXIMUM AVERAGE FLOW			
		6-HR	24-HR	72-HR	24.92-HR
+ (CFS)	(HR)				
		(CFS)			
+ 822.	14.17	470.	154.	148.	148.
		(INCHES) .477	.625	.625	.625
		(AC-FT) 233.	305.	305.	305.

```
                    CUMULATIVE AREA =      9.15 SQ MI


*** *** *** *** *** *** *** *** *** *** *** *** *** *** *** *** *** *** *** *** *** *** *** *** *** *** *** *** *** *** *** *** *** ***


          **************
          *            *
 548 KK   *   RCD2C1   *
          *            *
          **************
                       ROUTE FLOW FROM COMPUTATION POINT CPCD1C TO COMPUTATION POINT CIRSMC
                       MARIOCPA DRAIN FROM 67TH AVE TO 75TH AVE.
                       ADJUST SLOPE FROM .0011 TO REFLECT A VELOCITY OF LESS THAN 5 FT/SEC

              HYDROGRAPH ROUTING DATA

 552 RS         STORAGE ROUTING
                     NSTPS          3  NUMBER OF SUBREACHES
                      ITYP       ELEV  TYPE OF INITIAL CONDITION
                    RSVRIC      -1.00  INITIAL CONDITION
                         X        .00 WORKING R AND D COEFFICIENT

 553 RC         NORMAL DEPTH CHANNEL
                       ANL       .030  LEFT OVERBANK N-VALUE
                      ANCH       .030  MAIN CHANNEL N-VALUE
                       ANR       .030  RIGHT OVERBANK N-VALUE
                     RLNTH      3600.  REACH LENGTH
                       SEL      .0007  ENERGY SLOPE
                     ELMAX         .0  MAX. ELEV. FOR STORAGE/OUTFLOW CALCULATION

                                        CROSS-SECTION DATA
                       --- LEFT OVERBANK --- + ------ MAIN CHANNEL ------- + --- RIGHT OVERBANK ---
 555 RY       ELEVATION   990.20    990.10    990.00    985.00    985.00    990.00    990.10    990.20
 554 RX        DISTANCE      .00     10.00     20.00     45.00    155.00    180.00    190.00    200.00

                                                        ***

                                        COMPUTED STORAGE-OUTFLOW-ELEVATION DATA

           STORAGE       .00      2.52      5.10      7.74     10.45     13.21     16.04     18.93     21.88     24.90
           OUTFLOW       .00     16.74     53.36    105.33    170.88    248.96    338.91    440.23    552.58    675.70
         ELEVATION    985.00    985.27    985.55    985.82    986.09    986.37    986.64    986.92    987.19    987.46

           STORAGE     27.98     31.11     34.31     37.57     40.90     44.28     47.73     51.24     54.81     58.76
           OUTFLOW    809.37    953.45   1107.83   1272.40   1447.11   1631.92   1826.80   2031.72   2246.69   2492.50
         ELEVATION    987.74    988.01    988.28    988.56    988.83    989.11    989.38    989.65    989.93    990.20


     ***         ***          ***          ***          ***

                    HYDROGRAPH AT STATION    RCD2C1

  PEAK FLOW      TIME                         MAXIMUM AVERAGE FLOW
                                   6-HR         24-HR        72-HR     24.92-HR
+   (CFS)        (HR)
                           (CFS)
+     816.      14.42              462.          150.          144.         144.
                         (INCHES)  .469          .609          .609         .609
                         (AC-FT)   229.          297.          297.         297.

 PEAK STORAGE    TIME                       MAXIMUM AVERAGE STORAGE
                                   6-HR         24-HR        72-HR     24.92-HR
+  (AC-FT)       (HR)
        9.      14.42                6.            2.            2.           2.

  PEAK STAGE     TIME                         MAXIMUM AVERAGE STAGE
                                   6-HR         24-HR        72-HR     24.92-HR
+   (FEET)       (HR)
    987.75      14.42            986.92        985.73       985.70       985.70

                    CUMULATIVE AREA =      9.15 SQ MI


*** *** *** *** *** *** *** *** *** *** *** *** *** *** *** *** *** *** *** *** *** *** *** *** *** *** *** *** *** *** *** *** *** ***


          **************
          *            *
 556 KK   *    IR63B   *
          *            *
          **************
                       SUB-BASIN IR63B
                       24-HOUR SCS TYPE II RAINFALL WAS USED TO FIND TC & R FOR THIS BASIN
                       THIS BASIN USED RAINFALL REDUCTION FACTOR OF   .934
                           L =   .82   Kb = .034   Adj. Slope =    11.0

              SUBBASIN RUNOFF DATA

 561 BA         SUBBASIN CHARACTERISTICS
                     TAREA         .12  SUBBASIN AREA
```



```
                  PRECIPITATION DATA

  32 PB                STORM        3.92  BASIN TOTAL PRECIPITATION

  32 PI             INCREMENTAL PRECIPITATION PATTERN
                       .00       .00       .00       .00       .00       .00       .00       .00       .00       .00
                       .00       .00       .00       .00       .00       .00       .00       .00       .00       .00
                       .00       .00       .00       .00       .00       .00       .00       .00       .00       .00
                       .00       .00       .00       .00       .00       .00       .00       .00       .00       .00
                       .00       .00       .00       .00       .00       .00       .00       .00       .00       .00
                       .00       .00       .00       .00       .00       .00       .00       .00       .00       .00
                       .00       .00       .00       .00       .00       .00       .00       .00       .00       .00
                       .00       .00       .00       .00       .00       .00       .00       .00       .00       .00
                       .00       .00       .00       .00       .00       .00       .00       .00       .00       .00
                       .00       .00       .00       .00       .00       .00       .00       .00       .00       .00
                       .00       .00       .00       .00       .00       .00       .00       .00       .00       .00
                       .00       .00       .00       .00       .00       .00       .00       .00       .00       .00
                       .00       .00       .00       .00       .00       .00       .00       .01       .00       .01
                       .01       .01       .01       .01       .01       .01       .01       .01       .03       .03
                       .03       .09       .09       .09       .01       .01       .01       .01       .01       .01
                       .01       .01       .01       .01       .01       .01       .00       .00       .00       .00
                       .00       .00       .00       .00       .00       .00       .00       .00       .00       .00
                       .00       .00       .00       .00       .00       .00       .00       .00       .00       .00
                       .00       .00       .00       .00       .00       .00       .00       .00       .00       .00
                       .00       .00       .00       .00       .00       .00       .00       .00       .00       .00
                       .00       .00       .00       .00       .00       .00       .00       .00       .00       .00
                       .00       .00       .00       .00       .00       .00       .00       .00       .00       .00
                       .00       .00       .00       .00       .00       .00       .00       .00       .00       .00
                       .00       .00       .00       .00       .00       .00       .00       .00       .00       .00
                       .00       .00       .00       .00       .00       .00       .00       .00       .00       .00
                       .00       .00       .00       .00       .00       .00       .00       .00       .00       .00
                       .00       .00       .00       .00       .00       .00       .00       .00       .00       .00
                       .00       .00       .00       .00       .00       .00       .00       .00       .00       .00
                       .00       .00       .00       .00       .00       .00       .00       .00

 562 LG             GREEN AND AMPT LOSS RATE
                         STRTL        .13  STARTING LOSS
                           DTH        .25  MOISTURE DEFICIT
                          PSIF       4.80  WETTING FRONT SUCTION
                         XKSAT        .40  HYDRAULIC CONDUCTIVITY
                         RTIMP      71.00  PERCENT IMPERVIOUS AREA

 563 UC             CLARK UNITGRAPH
                            TC        .57  TIME OF CONCENTRATION
                             R        .56  STORAGE COEFFICIENT

 564 UA             ACCUMULATED-AREA VS. TIME, 11 ORDINATES
                        .0       5.0      16.0      30.0      65.0      77.0      84.0      90.0      94.0      97.0
                     100.0

                                                 ***

                                              UNIT HYDROGRAPH PARAMETERS
                                     CLARK  TC=   .57 HR,          R=   .56 HR
                                    SNYDER  TP=   .36 HR,         CP=   .41

                                                 UNIT HYDROGRAPH
                                            39 END-OF-PERIOD ORDINATES
              7.        25.        61.        88.        90.        87.        81.        72.        62.        54.
             46.        40.        34.        30.        25.        22.        19.        16.        14.        12.
             10.         9.         8.         7.         6.         5.         4.         4.         3.         3.
              2.         2.         2.         2.         1.         1.         1.         1.         1.

     ***         ***          ***          ***          ***

                       HYDROGRAPH AT STATION     IR63B

    TOTAL RAINFALL =     3.92, TOTAL LOSS =      .82, TOTAL EXCESS =     3.10

  PEAK FLOW      TIME                         MAXIMUM AVERAGE FLOW
                                   6-HR         24-HR        72-HR     24.92-HR
+   (CFS)        (HR)
                           (CFS)
+     127.      12.25               30.           10.           10.          10.
                         (INCHES)  2.274         3.075         3.082        3.082
                         (AC-FT)    15.           20.           20.          20.

                       CUMULATIVE AREA =      .12 SQ MI


*** *** *** *** *** *** *** *** *** *** *** *** *** *** *** *** *** *** *** *** *** *** *** *** *** *** *** *** *** *** *** *** *** ***


          **************
          *            *
 566 KK   *     IR63   *
          *            *
          **************
                     DIVERT RETENTION VOLUME

    DT            DIVERSION
                       ISTAD       RET63  DIVERSION HYDROGRAPH IDENTIFICATION
                      DSTRMX       11.20  MAXIMUM VOLUME TO BE DIVERTED
```

```
     DI          INFLOW       .00   1000.00  10000.00

     DQ     DIVERTED FLOW     .00   1000.00  10000.00

                                                          ***

      ***         ***         ***         ***         ***

                    DIVERSION HYDROGRAPH    RET63

   PEAK FLOW      TIME                     MAXIMUM AVERAGE FLOW
                                     6-HR        24-HR       72-HR     24.92-HR
 +   (CFS)        (HR)
                             (CFS)
 +     127.      12.25                20.          6.          5.          5.
                           (INCHES)  1.471      1.694       1.694       1.694
                           (AC-FT)     10.        11.         11.         11.

                           CUMULATIVE AREA =     .12 SQ MI

      ***         ***         ***         ***         ***

                    HYDROGRAPH AT STATION     IR63

   PEAK FLOW      TIME                     MAXIMUM AVERAGE FLOW
                                     6-HR        24-HR       72-HR     24.92-HR
 +   (CFS)        (HR)
                             (CFS)
 +      79.      12.75                16.          5.          4.          4.
                           (INCHES)  1.166      1.388       1.388       1.388
                           (AC-FT)      8.         9.          9.          9.

                           CUMULATIVE AREA =     .12 SQ MI


*** *** *** *** *** *** *** *** *** *** *** *** *** *** *** *** *** *** *** *** *** *** *** *** *** *** *** *** *** *** *** *** *** ***

                 **************
                 *            *
   571 KK        *   RIR65C   *
                 *            *
                 **************
                            ROUTE RETRIEVED FLOW FROM SUB-BASIN IR63B TO COMPUTATION POINT CIR65C
                           CROSS-SECTION REVISED TO REFLECT URBANIZED CONDITIONS

                HYDROGRAPH ROUTING DATA

   574 RS         STORAGE ROUTING
                       NSTPS           7  NUMBER OF SUBREACHES
                       ITYP         ELEV  TYPE OF INITIAL CONDITION
                       RSVRIC      -1.00  INITIAL CONDITION
                       X             .00  WORKING R AND D COEFFICIENT

   575 RC         NORMAL DEPTH CHANNEL
                       ANL          .030  LEFT OVERBANK N-VALUE
                       ANCH         .030  MAIN CHANNEL N-VALUE
                       ANR          .030  RIGHT OVERBANK N-VALUE
                       RLNTH       3300.  REACH LENGTH
                       SEL         .0010  ENERGY SLOPE
                       ELMAX          .0  MAX. ELEV. FOR STORAGE/OUTFLOW CALCULATION

                                          CROSS-SECTION DATA
                          --- LEFT OVERBANK --- + ------ MAIN CHANNEL ------- + --- RIGHT OVERBANK ---
   577 RY        ELEVATION     6.00      5.00      4.00      1.00      1.00      4.00      5.00      6.00
   576 RX        DISTANCE       .00      1.00     11.00     21.00     26.00     31.00     41.00     46.00

                                                        ***

                                         COMPUTED STORAGE-OUTFLOW-ELEVATION DATA

              STORAGE       .00       .11       .25       .42       .61       .83      1.07      1.34      1.64      1.96
              OUTFLOW       .00       .88      2.94      6.10     10.42     15.95     22.80     31.04     40.75     52.03
            ELEVATION      1.00      1.26      1.53      1.79      2.05      2.32      2.58      2.84      3.11      3.37

              STORAGE      2.31      2.68      3.10      3.61      4.23      4.96      5.76      6.60      7.47      8.37
              OUTFLOW     64.95     79.59     98.42    121.45    147.94    178.47    214.38    254.83    299.46    348.23
            ELEVATION      3.63      3.89      4.16      4.42      4.68      4.95      5.21      5.47      5.74      6.00

*** WARNING *** MODIFIED PULS ROUTING MAY BE NUMERICALLY UNSTABLE FOR OUTFLOWS BETWEEN        80. TO       348.
                THE ROUTED HYDROGRAPH SHOULD BE EXAMINED FOR OSCILLATIONS OR OUTFLOWS GREATER THAN PEAK INFLOWS.
                THIS CAN BE CORRECTED BY DECREASING THE TIME INTERVAL OR INCREASING STORAGE (USE A LONGER REACH.)

      ***         ***         ***         ***         ***

                    HYDROGRAPH AT STATION    RIR65C

   PEAK FLOW      TIME                     MAXIMUM AVERAGE FLOW
                                     6-HR        24-HR       72-HR     24.92-HR
 +   (CFS)        (HR)
                             (CFS)
```



```
 +      62.      13.17                15.          5.          4.          4.
                           (INCHES)  1.132      1.364       1.364       1.364
                           (AC-FT)      7.         9.          9.          9.

  PEAK STORAGE    TIME                    MAXIMUM AVERAGE STORAGE
                                     6-HR        24-HR       72-HR     24.92-HR
 +  (AC-FT)       (HR)
        0.       13.17                 0.         0.          0.          0.

   PEAK STAGE     TIME                    MAXIMUM AVERAGE STAGE
                                     6-HR        24-HR       72-HR     24.92-HR
 +   (FEET)       (HR)
      3.58       13.17               2.13       1.42        1.40        1.40

                           CUMULATIVE AREA =     .12 SQ MI


*** *** *** *** *** *** *** *** *** *** *** *** *** *** *** *** *** *** *** *** *** *** *** *** *** *** *** *** *** *** *** *** *** ***

                 **************
                 *            *
   578 KK        *   IR65C    *
                 *            *
                 **************
                            SUB-BASIN IR65C
                            24-HOUR SCS TYPE II RAINFALL WAS USED TO FIND TC & R FOR THIS BASIN
                            THIS BASIN USED RAINFALL REDUCTION FACTOR OF  .934
                              L =  .84  Kb = .052  Adj. Slope =    13.0

               SUBBASIN RUNOFF DATA

   583 BA        SUBBASIN CHARACTERISTICS
                      TAREA         .17  SUBBASIN AREA

                 PRECIPITATION DATA

    32 PB             STORM        3.92  BASIN TOTAL PRECIPITATION

    32 PI          INCREMENTAL PRECIPITATION PATTERN
                        .00       .00       .00       .00       .00       .00       .00       .00       .00       .00
                        .00       .00       .00       .00       .00       .00       .00       .00       .00       .00
                        .00       .00       .00       .00       .00       .00       .00       .00       .00       .00
                        .00       .00       .00       .00       .00       .00       .00       .00       .00       .00
                        .00       .00       .00       .00       .00       .00       .00       .00       .00       .00
                        .00       .00       .00       .00       .00       .00       .00       .00       .00       .00
                        .00       .00       .00       .00       .00       .00       .00       .00       .00       .00
                        .00       .00       .00       .00       .00       .00       .00       .00       .00       .00
                        .00       .00       .00       .00       .00       .00       .00       .00       .00       .00
                        .00       .00       .00       .00       .00       .00       .00       .00       .00       .00
                        .00       .00       .00       .00       .00       .00       .00       .00       .00       .00
                        .00       .00       .00       .00       .00       .00       .00       .00       .00       .00
                        .00       .00       .00       .00       .00       .00       .00       .01       .00       .01
                        .01       .01       .01       .01       .01       .01       .01       .01       .03       .03
                        .03       .09       .09       .09       .01       .01       .01       .01       .01       .01
                        .01       .01       .01       .01       .01       .01       .00       .00       .00       .00
                        .00       .00       .00       .00       .00       .00       .00       .00       .00       .00
                        .00       .00       .00       .00       .00       .00       .00       .00       .00       .00
                        .00       .00       .00       .00       .00       .00       .00       .00       .00       .00
                        .00       .00       .00       .00       .00       .00       .00       .00       .00       .00
                        .00       .00       .00       .00       .00       .00       .00       .00       .00       .00
                        .00       .00       .00       .00       .00       .00       .00       .00       .00       .00
                        .00       .00       .00       .00       .00       .00       .00       .00       .00       .00
                        .00       .00       .00       .00       .00       .00       .00       .00       .00       .00
                        .00       .00       .00       .00       .00       .00       .00       .00       .00       .00
                        .00       .00       .00       .00       .00       .00       .00       .00       .00       .00
                        .00       .00       .00       .00       .00       .00       .00       .00       .00       .00
                        .00       .00       .00       .00       .00       .00       .00       .00       .00       .00
                        .00       .00       .00       .00       .00       .00       .00       .00

   584 LG        GREEN AND AMPT LOSS RATE
                      STRTL         .28  STARTING LOSS
                        DTH         .25  MOISTURE DEFICIT
                       PSIF        4.80  WETTING FRONT SUCTION
                      XKSAT         .36  HYDRAULIC CONDUCTIVITY
                      RTIMP       21.00  PERCENT IMPERVIOUS AREA

   585 UC        CLARK UNITGRAPH
                         TC         .83  TIME OF CONCENTRATION
                          R         .72  STORAGE COEFFICIENT

   586 UA        ACCUMULATED-AREA VS. TIME,  11 ORDINATES
                       .0        5.0       16.0       30.0       65.0       77.0       84.0       90.0       94.0       97.0
                    100.0

                                                    ***

                                         UNIT HYDROGRAPH PARAMETERS
                                    CLARK   TC=   .83 HR,        R=   .72 HR
                                    SNYDER  TP=   .49 HR,       CP=   .42

                                              UNIT HYDROGRAPH
                                          50 END-OF-PERIOD ORDINATES
              4.        15.        32.        64.        90.        94.        93.        90.        85.        80.
```

```
          73.      65.      58.      52.      46.      41.      37.      33.      29.      26.
          23.      20.      18.      16.      14.      13.      11.      10.       9.       8.
           7.       6.       6.       5.       5.       4.       4.       3.       3.       3.
           2.       2.       2.       2.       1.       1.       1.       1.       1.       1.

     ***           ***           ***           ***           ***

                    HYDROGRAPH AT STATION    IR65C

   TOTAL RAINFALL =    3.92, TOTAL LOSS =    2.23, TOTAL EXCESS =    1.69

  PEAK FLOW     TIME                    MAXIMUM AVERAGE FLOW
                                 6-HR       24-HR       72-HR     24.92-HR
+   (CFS)       (HR)
                (CFS)
+    112.     12.33                26.          8.          7.          7.
              (INCHES)          1.443       1.681       1.682       1.682
              (AC-FT)              13.         15.         15.         15.

              CUMULATIVE AREA =     .17 SQ MI

*** *** *** *** *** *** *** *** *** *** *** *** *** *** *** *** *** *** *** *** *** *** *** *** *** *** *** *** *** *** *** *** *** *** *** *** ***

          **************
          *            *
588 KK    *     IR65R  *
          *            *
          **************
                    DIVERT RETENTION VOLUME

    DT          DIVERSION
                   ISTAD      RET65C  DIVERSION HYDROGRAPH IDENTIFICATION
                  DSTRMX       14.40  MAXIMUM VOLUME TO BE DIVERTED

    DI            INFLOW         .00   1000.00  10000.00

    DQ       DIVERTED FLOW       .00   1000.00  10000.00

                                                        ***

     ***           ***           ***           ***           ***

                    DIVERSION HYDROGRAPH    RET65C

  PEAK FLOW     TIME                    MAXIMUM AVERAGE FLOW
                                 6-HR       24-HR       72-HR     24.92-HR
+   (CFS)       (HR)
                (CFS)
+    112.     12.33                26.          7.          7.          7.
              (INCHES)          1.443       1.588       1.588       1.588
              (AC-FT)              13.         14.         14.         14.

              CUMULATIVE AREA =     .17 SQ MI

     ***           ***           ***           ***           ***

                    HYDROGRAPH AT STATION    IR65R

  PEAK FLOW     TIME                    MAXIMUM AVERAGE FLOW
                                 6-HR       24-HR       72-HR     24.92-HR
+   (CFS)       (HR)
                (CFS)
+      2.     17.17                 1.          0.          0.          0.
              (INCHES)          .078        .094        .094        .094
              (AC-FT)              1.          1.          1.          1.

              CUMULATIVE AREA =     .17 SQ MI

*** *** *** *** *** *** *** *** *** *** *** *** *** *** *** *** *** *** *** *** *** *** *** *** *** *** *** *** *** *** *** *** *** *** *** *** ***

          **************
          *            *
593 KK    *    CIR65C  *
          *            *
          **************
                    COMBINE RETRIEVED ROUTED FLOW FROM SUB-BASIN IR63B TO RUNOFF FROM SUB-BASIN
                    IR65C

596 HC          HYDROGRAPH COMBINATION
                   ICOMP           2  NUMBER OF HYDROGRAPHS TO COMBINE

                                                        ***

     ***           ***           ***           ***           ***

                    HYDROGRAPH AT STATION    CIR65C
```



```
  PEAK FLOW     TIME                    MAXIMUM AVERAGE FLOW
                                 6-HR       24-HR       72-HR     24.92-HR
+   (CFS)       (HR)
                (CFS)
+     62.     13.17                16.          5.          5.          5.
              (INCHES)          .495        .630        .630        .630
              (AC-FT)              8.         10.         10.         10.

              CUMULATIVE AREA =     .29 SQ MI

*** *** *** *** *** *** *** *** *** *** *** *** *** *** *** *** *** *** *** *** *** *** *** *** *** *** *** *** *** *** *** *** *** *** *** *** ***

          **************
          *            *
597 KK    *     RIRDC  *
          *            *
          **************
                    ROUTE FLOW FROM COMPUTATION POINT CIR65C TO COMPUTATION POINT CIRDC
                    CROSS-SECTION REVISED TO REFLECT URBANIZED CONDITIONS

               HYDROGRAPH ROUTING DATA

600 RS          STORAGE ROUTING
                      NSTPS           2  NUMBER OF SUBREACHES
                       ITYP        ELEV  TYPE OF INITIAL CONDITION
                     RSVRIC       -1.00  INITIAL CONDITION
                          X         .00 WORKING R AND D COEFFICIENT

601 RC          NORMAL DEPTH CHANNEL
                        ANL        .030  LEFT OVERBANK N-VALUE
                       ANCH        .030  MAIN CHANNEL N-VALUE
                        ANR        .030  RIGHT OVERBANK N-VALUE
                      RLNTH       3200.  REACH LENGTH
                        SEL       .0018  ENERGY SLOPE
                      ELMAX          .0  MAX. ELEV. FOR STORAGE/OUTFLOW CALCULATION

                                   CROSS-SECTION DATA
                          --- LEFT OVERBANK --- + ------ MAIN CHANNEL ------- + --- RIGHT OVERBANK ---
603 RY       ELEVATION   1014.50   1014.00   1013.00   1010.00   1010.00   1013.00   1014.00   1014.50
602 RX       DISTANCE        .00      1.00     10.00     20.00     30.00     40.00     50.00     51.00

                                                        ***

                    COMPUTED STORAGE-OUTFLOW-ELEVATION DATA

     STORAGE        .00       .19       .40       .65       .92      1.21      1.54      1.89      2.27      2.68
     OUTFLOW        .00      1.96      6.40     12.99     21.70     32.57     45.66     61.07     78.89     99.22
   ELEVATION    1010.00   1010.24   1010.47   1010.71   1010.95   1011.18   1011.42   1011.66   1011.89   1012.13

     STORAGE       3.11      3.58      4.07      4.59      5.17      5.84      6.58      7.40      8.27      9.14
     OUTFLOW     122.16    147.80    176.25    209.94    251.86    298.14    349.35    406.14    469.84    538.84
   ELEVATION    1012.37   1012.60   1012.84   1013.08   1013.32   1013.55   1013.79   1014.03   1014.26   1014.50

     ***           ***           ***           ***           ***

                    HYDROGRAPH AT STATION    RIRDC

  PEAK FLOW     TIME                    MAXIMUM AVERAGE FLOW
                                 6-HR       24-HR       72-HR     24.92-HR
+   (CFS)       (HR)
                (CFS)
+     47.     13.67                15.          5.          5.          5.
              (INCHES)          .478        .613        .613        .613
              (AC-FT)              7.         10.         10.         10.

  PEAK STORAGE  TIME                    MAXIMUM AVERAGE STORAGE
                                 6-HR       24-HR       72-HR     24.92-HR
+   (AC-FT)     (HR)
                1.          13.67                 0.          0.          0.          0.

  PEAK STAGE    TIME                    MAXIMUM AVERAGE STAGE
                                 6-HR       24-HR       72-HR     24.92-HR
+   (FEET)      (HR)
             1011.44          13.67          1010.71     1010.27     1010.26     1010.26

              CUMULATIVE AREA =     .29 SQ MI

*** *** *** *** *** *** *** *** *** *** *** *** *** *** *** *** *** *** *** *** *** *** *** *** *** *** *** *** *** *** *** *** *** *** *** *** ***

          **************
          *            *
604 KK    *    DIIRDC  *
          *            *
          **************
                    ROUTED FLOW FROM COMPUTATION POINT CIR65C IS SPLIT AT COMPUTATION POINT
                    CIRDC
```

```
   DT          DIVERSION
                  ISTAD       RIR65C  DIVERSION HYDROGRAPH IDENTIFICATION

   DI             INFLOW        .00     16.00     34.00     51.00     71.00     80.00    100.00    120.00    150.00

   DQ       DIVERTED FLOW       .00     16.00     25.00     32.00     40.00     49.00     69.00     89.00    119.00

                                                              ***

      ***            ***            ***            ***            ***

                         DIVERSION HYDROGRAPH    RIR65C

    PEAK FLOW      TIME                                MAXIMUM AVERAGE FLOW
                                          6-HR          24-HR          72-HR       24.92-HR
 +   (CFS)         (HR)
                             (CFS)
 +      30.        13.67                   13.            4.             4.             4.
                           (INCHES)       .401          .537           .537           .537
                            (AC-FT)         6.            8.             8.             8.

                            CUMULATIVE AREA =     .29 SQ MI

      ***            ***            ***            ***            ***

                         HYDROGRAPH AT STATION    DIIRDC

    PEAK FLOW      TIME                                MAXIMUM AVERAGE FLOW
                                          6-HR          24-HR          72-HR       24.92-HR
 +   (CFS)         (HR)
                             (CFS)
 +      17.        13.67                    2.            1.             1.             1.
                           (INCHES)       .077          .077           .077           .077
                            (AC-FT)         1.            1.             1.             1.

                            CUMULATIVE AREA =     .29 SQ MI


*** *** *** *** *** *** *** *** *** *** *** *** *** *** *** *** *** *** *** *** *** *** *** *** *** *** *** *** *** *** *** *** *** ***

              **************
              *            *
  610 KK      *    IRDC    *
              *            *
              **************

                           SUB-BASIN IRDC
                           24-HOUR SCS TYPE II RAINFALL WAS USED TO FIND TC & R FOR THIS BASIN
                           THIS BASIN USED RAINFALL REDUCTION FACTOR OF  .934
                             L = 1.47  Kb = .038  Adj. Slope =   12.0

                SUBBASIN RUNOFF DATA

  615 BA          SUBBASIN CHARACTERISTICS
                       TAREA        .52  SUBBASIN AREA

                  PRECIPITATION DATA

   32 PB               STORM       3.92  BASIN TOTAL PRECIPITATION

   32 PI            INCREMENTAL PRECIPITATION PATTERN
                        .00       .00       .00       .00       .00       .00       .00       .00       .00       .00
                        .00       .00       .00       .00       .00       .00       .00       .00       .00       .00
                        .00       .00       .00       .00       .00       .00       .00       .00       .00       .00
                        .00       .00       .00       .00       .00       .00       .00       .00       .00       .00
                        .00       .00       .00       .00       .00       .00       .00       .00       .00       .00
                        .00       .00       .00       .00       .00       .00       .00       .00       .00       .00
                        .00       .00       .00       .00       .00       .00       .00       .00       .00       .00
                        .00       .00       .00       .00       .00       .00       .00       .00       .00       .00
                        .00       .00       .00       .00       .00       .00       .00       .00       .00       .00
                        .00       .00       .00       .00       .00       .00       .00       .00       .00       .00
                        .00       .00       .00       .00       .00       .00       .00       .00       .00       .00
                        .00       .00       .00       .00       .00       .00       .00       .00       .00       .00
                        .00       .00       .00       .00       .00       .00       .00       .01       .00       .01
                        .01       .01       .01       .01       .01       .01       .01       .01       .03       .03
                        .03       .09       .09       .09       .01       .01       .01       .01       .01       .01
                        .01       .01       .01       .01       .01       .01       .00       .00       .00       .00
                        .00       .00       .00       .00       .00       .00       .00       .00       .00       .00
                        .00       .00       .00       .00       .00       .00       .00       .00       .00       .00
                        .00       .00       .00       .00       .00       .00       .00       .00       .00       .00
                        .00       .00       .00       .00       .00       .00       .00       .00       .00       .00
                        .00       .00       .00       .00       .00       .00       .00       .00       .00       .00
                        .00       .00       .00       .00       .00       .00       .00       .00       .00       .00
                        .00       .00       .00       .00       .00       .00       .00       .00       .00       .00
                        .00       .00       .00       .00       .00       .00       .00       .00       .00       .00
                        .00       .00       .00       .00       .00       .00       .00       .00       .00       .00
                        .00       .00       .00       .00       .00       .00       .00       .00       .00       .00
                        .00       .00       .00       .00       .00       .00       .00       .00       .00       .00
                        .00       .00       .00       .00       .00       .00       .00       .00       .00       .00
                        .00       .00       .00       .00       .00       .00       .00       .00

  616 LG          GREEN AND AMPT LOSS RATE
                       STRTL        .19  STARTING LOSS
```



```
                        DTH          .25  MOISTURE DEFICIT
                       PSIF         4.80  WETTING FRONT SUCTION
                      XKSAT          .37  HYDRAULIC CONDUCTIVITY
                      RTIMP        51.00  PERCENT IMPERVIOUS AREA

  617 UC          CLARK UNITGRAPH
                         TC          .96  TIME OF CONCENTRATION
                          R          .69  STORAGE COEFFICIENT

  618 UA          ACCUMULATED-AREA VS. TIME,  11 ORDINATES
                       .0        5.0       16.0       30.0       65.0       77.0       84.0       90.0       94.0       97.0
                    100.0

                                                   ***

                                       UNIT HYDROGRAPH PARAMETERS
                                 CLARK    TC=    .96 HR,         R=    .69 HR
                                SNYDER    TP=    .53 HR,        CP=    .44

                                             UNIT HYDROGRAPH
                                        49 END-OF-PERIOD ORDINATES
               10.        39.        81.       149.       235.       282.       285.       279.       267.       252.
              236.       218.       196.       174.       154.       137.       121.       108.        95.        85.
               75.        66.        59.        52.        46.        41.        36.        32.        29.        25.
               23.        20.        18.        16.        14.        12.        11.        10.         9.         8.
                7.         6.         5.         5.         4.         4.         3.         3.         3.

      ***            ***            ***            ***            ***

                         HYDROGRAPH AT STATION      IRDC

   TOTAL RAINFALL =     3.92, TOTAL LOSS =     1.38, TOTAL EXCESS =     2.54

    PEAK FLOW      TIME                                MAXIMUM AVERAGE FLOW
                                          6-HR          24-HR          72-HR       24.92-HR
 +   (CFS)         (HR)
                             (CFS)
 +     397.        12.42                  110.           36.            34.            34.
                           (INCHES)      1.943         2.520          2.524          2.524
                            (AC-FT)        54.           71.            71.            71.

                            CUMULATIVE AREA =     .52 SQ MI


*** *** *** *** *** *** *** *** *** *** *** *** *** *** *** *** *** *** *** *** *** *** *** *** *** *** *** *** *** *** *** *** *** ***

              **************
              *            *
  620 KK      *    IRDR    *
              *            *
              **************
                           DIVERT RETENTION VOLUME

   DT          DIVERSION
                  ISTAD       RETRDC  DIVERSION HYDROGRAPH IDENTIFICATION
                 DSTRMX        43.20  MAXIMUM VOLUME TO BE DIVERTED

   DI             INFLOW        .00   1000.00  10000.00

   DQ       DIVERTED FLOW       .00   1000.00  10000.00

                                                   ***

      ***            ***            ***            ***            ***

                         DIVERSION HYDROGRAPH    RETRDC

    PEAK FLOW      TIME                                MAXIMUM AVERAGE FLOW
                                          6-HR          24-HR          72-HR       24.92-HR
 +   (CFS)         (HR)
                             (CFS)
 +     397.        12.42                   78.           22.            21.            21.
                           (INCHES)      1.377         1.543          1.543          1.543
                            (AC-FT)        39.           43.            43.            43.

                            CUMULATIVE AREA =     .52 SQ MI

      ***            ***            ***            ***            ***

                         HYDROGRAPH AT STATION      IRDR

    PEAK FLOW      TIME                                MAXIMUM AVERAGE FLOW
                                          6-HR          24-HR          72-HR       24.92-HR
 +   (CFS)         (HR)
                             (CFS)
 +     225.        13.17                   47.           14.            13.            13.
                           (INCHES)       .829          .981           .981           .981
                            (AC-FT)        23.           27.            27.            27.

                            CUMULATIVE AREA =     .52 SQ MI
```

```
*** *** *** *** *** *** *** *** *** *** *** *** *** *** *** *** *** *** *** *** *** *** *** *** *** *** *** *** *** *** *** *** *** ***

              **************
              *            *
 625 KK       *    CIRDC   *
              *            *
              **************

                          COMBINE ROUTED FLOW FROM COMPUTATION POINT CIR65C TO RUNOFF FROM SUB-BASIN
                          IRDC

 628 HC         HYDROGRAPH COMBINATION
                     ICOMP           2  NUMBER OF HYDROGRAPHS TO COMBINE

                                                                       ***

        ***           ***           ***           ***           ***

                          HYDROGRAPH AT STATION    CIRDC

 PEAK FLOW    TIME                        MAXIMUM AVERAGE FLOW
                                 6-HR       24-HR       72-HR     24.92-HR
 + (CFS)      (HR)
                        (CFS)
 +    225.    13.17                49.        14.         14.         14.
                      (INCHES)   .559       .656        .656        .656
                      (AC-FT)     24.        29.         29.         29.

                      CUMULATIVE AREA =     .82 SQ MI

*** *** *** *** *** *** *** *** *** *** *** *** *** *** *** *** *** *** *** *** *** *** *** *** *** *** *** *** *** *** *** *** *** ***

              **************
              *            *
 629 KK       *   RIRSMC   *
              *            *
              **************

                          ROUTE FLOW COMPUTATION POINT CIRDC TO COMPUTATION POINT CIRSMC
                          CROSS-SECTION REVISED TO REFLECT URBANIZED CONDITIONS

             HYDROGRAPH ROUTING DATA

 632 RS         STORAGE ROUTING
                     NSTPS           3  NUMBER OF SUBREACHES
                     ITYP         ELEV  TYPE OF INITIAL CONDITION
                     RSVRIC      -1.00  INITIAL CONDITION
                     X             .00  WORKING R AND D COEFFICIENT

 633 RC         NORMAL DEPTH CHANNEL
                     ANL          .035  LEFT OVERBANK N-VALUE
                     ANCH         .035  MAIN CHANNEL N-VALUE
                     ANR          .035  RIGHT OVERBANK N-VALUE
                     RLNTH       3400.  REACH LENGTH
                     SEL         .0058  ENERGY SLOPE
                     ELMAX          .0  MAX. ELEV. FOR STORAGE/OUTFLOW CALCULATION

                                    CROSS-SECTION DATA
                       --- LEFT OVERBANK --- + ------ MAIN CHANNEL ------- + --- RIGHT OVERBANK ---
 635 RY       ELEVATION  1006.00   1005.00   1004.00    999.00    999.00   1004.00   1005.00   1006.00
 634 RX       DISTANCE       .00     40.00     60.00     70.00     80.00     90.00    110.00    150.00

                                                                       ***

                                      COMPUTED STORAGE-OUTFLOW-ELEVATION DATA

       STORAGE         .00       .31       .66      1.05      1.49      1.97      2.49      3.05      3.66      4.30
       OUTFLOW         .00      6.24     20.27     40.88     67.90    101.40    141.56    188.60    242.77    304.35
     ELEVATION      999.00    999.37    999.74   1000.11   1000.47   1000.84   1001.21   1001.58   1001.95   1002.32

       STORAGE        4.99      5.73      6.50      7.32      8.21      9.47     11.15     13.36     16.40     20.29
       OUTFLOW      373.60    450.80    536.24    630.18    743.23    885.51   1052.57   1246.97   1488.88   1792.29
     ELEVATION     1002.68   1003.05   1003.42   1003.79   1004.16   1004.53   1004.89   1005.26   1005.63   1006.00

*** WARNING *** MODIFIED PULS ROUTING MAY BE NUMERICALLY UNSTABLE FOR OUTFLOWS BETWEEN      304. TO      1053.
                THE ROUTED HYDROGRAPH SHOULD BE EXAMINED FOR OSCILLATIONS OR OUTFLOWS GREATER THAN PEAK INFLOWS.
                THIS CAN BE CORRECTED BY DECREASING THE TIME INTERVAL OR INCREASING STORAGE (USE A LONGER REACH.)

        ***           ***           ***           ***           ***

                          HYDROGRAPH AT STATION   RIRSMC

 PEAK FLOW    TIME                        MAXIMUM AVERAGE FLOW
                                 6-HR       24-HR       72-HR     24.92-HR
 + (CFS)      (HR)
                        (CFS)
 +    197.    13.42                49.        14.         14.         14.
                      (INCHES)   .551       .650        .650        .650
                      (AC-FT)     24.        28.         28.         28.
```



```
 PEAK STORAGE   TIME                     MAXIMUM AVERAGE STORAGE
                               6-HR       24-HR       72-HR     24.92-HR
 + (AC-FT)      (HR)
        1.     13.42              0.          0.          0.          0.

  PEAK STAGE    TIME                     MAXIMUM AVERAGE STAGE
                               6-HR       24-HR       72-HR     24.92-HR
 + (FEET)       (HR)
    1001.64    13.42         1000.07      999.37      999.36      999.36

                       CUMULATIVE AREA =     .82 SQ MI

*** *** *** *** *** *** *** *** *** *** *** *** *** *** *** *** *** *** *** *** *** *** *** *** *** *** *** *** *** *** *** *** *** ***

              **************
              *            *
 636 KK       *    IRSMC   *
              *            *
              **************

                          SUB-BASIN IRSMC
                          24-HOUR SCS TYPE II RAINFALL WAS USED TO FIND TC & R FOR THIS BASIN
                          THIS BASIN USED RAINFALL REDUCTION FACTOR OF   .934
                            L =   .88  Kb = .043  Adj. Slope =   32.0

             SUBBASIN RUNOFF DATA

 641 BA         SUBBASIN CHARACTERISTICS
                     TAREA          .24  SUBBASIN AREA

                PRECIPITATION DATA

 32 PB               STORM         3.92  BASIN TOTAL PRECIPITATION

 32 PI             INCREMENTAL PRECIPITATION PATTERN
                      .00       .00       .00       .00       .00       .00       .00       .00       .00       .00
                      .00       .00       .00       .00       .00       .00       .00       .00       .00       .00
                      .00       .00       .00       .00       .00       .00       .00       .00       .00       .00
                      .00       .00       .00       .00       .00       .00       .00       .00       .00       .00
                      .00       .00       .00       .00       .00       .00       .00       .00       .00       .00
                      .00       .00       .00       .00       .00       .00       .00       .00       .00       .00
                      .00       .00       .00       .00       .00       .00       .00       .00       .00       .00
                      .00       .00       .00       .00       .00       .00       .00       .00       .00       .00
                      .00       .00       .00       .00       .00       .00       .00       .00       .00       .00
                      .00       .00       .00       .00       .00       .00       .00       .00       .00       .00
                      .00       .00       .00       .00       .00       .00       .00       .00       .00       .00
                      .00       .00       .00       .00       .00       .00       .00       .00       .00       .00
                      .00       .00       .00       .00       .00       .00       .00       .01       .00       .01
                      .01       .01       .01       .01       .01       .01       .01       .01       .03       .03
                      .03       .09       .09       .09       .01       .01       .01       .01       .01       .01
                      .01       .01       .01       .01       .01       .01       .00       .00       .00       .00
                      .00       .00       .00       .00       .00       .00       .00       .00       .00       .00
                      .00       .00       .00       .00       .00       .00       .00       .00       .00       .00
                      .00       .00       .00       .00       .00       .00       .00       .00       .00       .00
                      .00       .00       .00       .00       .00       .00       .00       .00       .00       .00
                      .00       .00       .00       .00       .00       .00       .00       .00       .00       .00
                      .00       .00       .00       .00       .00       .00       .00       .00       .00       .00
                      .00       .00       .00       .00       .00       .00       .00       .00       .00       .00
                      .00       .00       .00       .00       .00       .00       .00       .00       .00       .00
                      .00       .00       .00       .00       .00       .00       .00       .00       .00       .00
                      .00       .00       .00       .00       .00       .00       .00       .00       .00       .00
                      .00       .00       .00       .00       .00       .00       .00       .00       .00       .00
                      .00       .00       .00       .00       .00       .00       .00       .00       .00       .00
                      .00       .00       .00       .00       .00       .00       .00       .00

 642 LG         GREEN AND AMPT LOSS RATE
                     STRTL          .21  STARTING LOSS
                     DTH            .25  MOISTURE DEFICIT
                     PSIF          4.50  WETTING FRONT SUCTION
                     XKSAT          .43  HYDRAULIC CONDUCTIVITY
                     RTIMP        34.00  PERCENT IMPERVIOUS AREA

 643 UC         CLARK UNITGRAPH
                     TC             .48  TIME OF CONCENTRATION
                     R              .33  STORAGE COEFFICIENT

 644 UA         ACCUMULATED-AREA VS. TIME,  11 ORDINATES
                   .0       5.0      16.0      30.0      65.0      77.0      84.0      90.0      94.0      97.0
                100.0

                                                                       ***

                                          UNIT HYDROGRAPH PARAMETERS
                                     CLARK   TC=   .48 HR,       R=   .33 HR
                                     SNYDER  TP=   .30 HR,      CP=   .53

                                               UNIT HYDROGRAPH
                                          24 END-OF-PERIOD ORDINATES
             27.       119.       228.       267.       244.       211.       172.       134.       104.        81.
             63.        49.        38.        29.        23.        18.        14.        11.         8.         6.
              5.         4.         3.         2.

        ***           ***           ***           ***           ***
```

HYDROGRAPH AT STATION IRSMC

TOTAL RAINFALL = 3.92, TOTAL LOSS = 1.89, TOTAL EXCESS = 2.03

PEAK FLOW	TIME		MAXIMUM AVERAGE FLOW			
			6-HR	24-HR	72-HR	24.92-HR
+ (CFS)	(HR)					
		(CFS)				
+ 285.	12.17		42.	13.	13.	13.
		(INCHES)	1.636	2.020	2.023	2.023
		(AC-FT)	21.	26.	26.	26.

CUMULATIVE AREA = .24 SQ MI

*** ***

```
              **************
              *            *
646 KK        *    IRSMR   *
              *            *
              **************
```

DIVERT RETENTION VOLUME
RELAXED RETENTION VOLUME FROM 20.0 AC-FT

DT	DIVERSION			
	ISTAD	RETSMC	DIVERSION HYDROGRAPH IDENTIFICATION	
	DSTRMX	19.10	MAXIMUM VOLUME TO BE DIVERTED	
DI	INFLOW	.00	1000.00	10000.00
DQ	DIVERTED FLOW	.00	1000.00	10000.00

***

*** *** *** *** ***

DIVERSION HYDROGRAPH RETSMC

PEAK FLOW	TIME		MAXIMUM AVERAGE FLOW			
			6-HR	24-HR	72-HR	24.92-HR
+ (CFS)	(HR)					
		(CFS)				
+ 285.	12.17		36.	10.	9.	9.
		(INCHES)	1.371	1.486	1.486	1.486
		(AC-FT)	18.	19.	19.	19.

CUMULATIVE AREA = .24 SQ MI

*** *** *** *** ***

HYDROGRAPH AT STATION IRSMR

PEAK FLOW	TIME		MAXIMUM AVERAGE FLOW			
			6-HR	24-HR	72-HR	24.92-HR
+ (CFS)	(HR)					
		(CFS)				
+ 74.	12.83		11.	3.	3.	3.
		(INCHES)	.437	.537	.537	.537
		(AC-FT)	6.	7.	7.	7.

CUMULATIVE AREA = .24 SQ MI

*** ***

```
              **************
              *            *
652 KK        *   CIRSMS   *
              *            *
              **************
```

654 HC HYDROGRAPH COMBINATION
ICOMP 2 NUMBER OF HYDROGRAPHS TO COMBINE

***

*** *** *** *** ***

HYDROGRAPH AT STATION CIRSMS

PEAK FLOW	TIME		MAXIMUM AVERAGE FLOW			
			6-HR	24-HR	72-HR	24.92-HR
+ (CFS)	(HR)					
		(CFS)				
+ 221.	13.42		59.	18.	17.	17.
		(INCHES)	.517	.624	.624	.624

(AC-FT)	29.	35.	35.	35.

CUMULATIVE AREA = 1.06 SQ MI

*** ***

```
              **************
              *            *
655 KK        *   CIRSMC   *
              *            *
              **************
```

COMBINE FLOWS IN MARICOPA DRAIN JUST WEST OF 75TH AVE

657 HC HYDROGRAPH COMBINATION
ICOMP 2 NUMBER OF HYDROGRAPHS TO COMBINE

***

*** *** *** *** ***

HYDROGRAPH AT STATION CIRSMC

PEAK FLOW	TIME		MAXIMUM AVERAGE FLOW			
			6-HR	24-HR	72-HR	24.92-HR
+ (CFS)	(HR)					
		(CFS)				
+ 927.	13.92		519.	168.	162.	162.
		(INCHES)	.473	.611	.611	.611
		(AC-FT)	257.	333.	333.	333.

CUMULATIVE AREA = 10.21 SQ MI

*** ***

```
              **************
              *            *
658 KK        *    CD2C    *
              *            *
              **************
```

SUB-BASIN CD2C
24-HOUR SCS TYPE II RAINFALL WAS USED TO FIND TC & R FOR THIS BASIN
THIS BASIN USED RAINFALL REDUCTION FACTOR OF .934
L = 1.57 Kb = .043 Adj. Slope = 4.0

SUBBASIN RUNOFF DATA

663 BA SUBBASIN CHARACTERISTICS
TAREA .60 SUBBASIN AREA

PRECIPITATION DATA

32 PB STORM 3.92 BASIN TOTAL PRECIPITATION

32 PI INCREMENTAL PRECIPITATION PATTERN

.00	.00	.00	.00	.00	.00	.00	.00	.00	.00
.00	.00	.00	.00	.00	.00	.00	.00	.00	.00
.00	.00	.00	.00	.00	.00	.00	.00	.00	.00
.00	.00	.00	.00	.00	.00	.00	.00	.00	.00
.00	.00	.00	.00	.00	.00	.00	.00	.00	.00
.00	.00	.00	.00	.00	.00	.00	.00	.00	.00
.00	.00	.00	.00	.00	.00	.00	.00	.00	.00
.00	.00	.00	.00	.00	.00	.00	.00	.00	.00
.00	.00	.00	.00	.00	.00	.00	.00	.00	.00
.00	.00	.00	.00	.00	.00	.00	.00	.00	.00
.00	.00	.00	.00	.00	.00	.00	.00	.00	.00
.00	.00	.00	.00	.00	.00	.00	.00	.00	.00
.00	.00	.00	.00	.00	.00	.00	.01	.00	.01
.01	.01	.01	.01	.01	.01	.01	.01	.03	.03
.03	.09	.09	.09	.01	.01	.01	.01	.01	.01
.01	.01	.01	.01	.01	.01	.00	.00	.00	.00
.00	.00	.00	.00	.00	.00	.00	.00	.00	.00
.00	.00	.00	.00	.00	.00	.00	.00	.00	.00
.00	.00	.00	.00	.00	.00	.00	.00	.00	.00
.00	.00	.00	.00	.00	.00	.00	.00	.00	.00
.00	.00	.00	.00	.00	.00	.00	.00	.00	.00
.00	.00	.00	.00	.00	.00	.00	.00	.00	.00
.00	.00	.00	.00	.00	.00	.00	.00	.00	.00
.00	.00	.00	.00	.00	.00	.00	.00	.00	.00
.00	.00	.00	.00	.00	.00	.00	.00	.00	.00
.00	.00	.00	.00	.00	.00	.00	.00	.00	.00
.00	.00	.00	.00	.00	.00	.00	.00	.00	.00
.00	.00	.00	.00	.00	.00	.00	.00	.00	.00
.00	.00	.00	.00	.00	.00	.00	.00		

664 LG GREEN AND AMPT LOSS RATE
STRTL .24 STARTING LOSS
DTH .15 MOISTURE DEFICIT
PSIF 8.40 WETTING FRONT SUCTION

```
                    XKSAT        .09  HYDRAULIC CONDUCTIVITY
                    RTIMP      31.00  PERCENT IMPERVIOUS AREA

665 UC          CLARK UNITGRAPH
                      TC       1.50  TIME OF CONCENTRATION
                       R       1.12  STORAGE COEFFICIENT

666 UA          ACCUMULATED-AREA VS. TIME,  11 ORDINATES
                     .0      5.0      16.0      30.0      65.0      77.0      84.0      90.0      94.0      97.0
                  100.0

                                                  ***

                                          UNIT HYDROGRAPH PARAMETERS
                                    CLARK   TC=  1.50 HR,       R=  1.12 HR
                                  SNYDER   TP=   .82 HR,      CP=   .43

                                          UNIT HYDROGRAPH
                                      79 END-OF-PERIOD ORDINATES
                5.       15.       30.       49.       70.      102.      152.      189.      202.      205.
              203.      200.      196.      190.      184.      176.      169.      163.      154.      143.
              132.      123.      114.      106.       98.       91.       84.       78.       73.       68.
               63.       58.       54.       50.       46.       43.       40.       37.       34.       32.
               30.       28.       26.       24.       22.       20.       19.       18.       16.       15.
               14.       13.       12.       11.       10.       10.        9.        8.        8.        7.
                7.        6.        6.        5.        5.        5.        4.        4.        4.        3.
                3.        3.        3.        3.        2.        2.        2.        2.        2.

     ***               ***               ***               ***               ***

                          HYDROGRAPH AT STATION     CD2C

     TOTAL RAINFALL =     3.92, TOTAL LOSS =     1.53, TOTAL EXCESS =     2.39

   PEAK FLOW     TIME                                MAXIMUM AVERAGE FLOW
                                                6-HR       24-HR       72-HR     24.92-HR
+    (CFS)       (HR)
                                (CFS)
+     337.     12.75                128.        38.         37.         37.
                              (INCHES)       1.996       2.368       2.369       2.369
                                (AC-FT)        64.         76.         76.         76.

                          CUMULATIVE AREA =      .60 SQ MI

*** *** *** *** *** *** *** *** *** *** *** *** *** *** *** *** *** *** *** *** *** *** *** *** *** *** *** *** *** *** *** *** *** *** *** ***

                ***************
                *               *
668 KK          *      CD2R     *
                *               *
                ***************
                          DIVERT RETENTION VOLUME
                          RELAXED RETENTION VOLUME FROM 44.8 AC-FT.

     DT           DIVERSION
                      ISTAD       RET2C  DIVERSION HYDROGRAPH IDENTIFICATION
                     DSTRMX       39.70  MAXIMUM VOLUME TO BE DIVERTED

     DI             INFLOW         .00   1000.00  10000.00

     DQ       DIVERTED FLOW        .00   1000.00  10000.00

                                                  ***

     ***               ***               ***               ***               ***

                          DIVERSION HYDROGRAPH     RET2C

   PEAK FLOW     TIME                                MAXIMUM AVERAGE FLOW
                                                6-HR       24-HR       72-HR     24.92-HR
+    (CFS)       (HR)
                                (CFS)
+     337.     12.75                 74.        20.         19.         19.
                              (INCHES)       1.150       1.245       1.245       1.245
                                (AC-FT)        37.         40.         40.         40.

                          CUMULATIVE AREA =      .60 SQ MI

     ***               ***               ***               ***               ***

                          HYDROGRAPH AT STATION     CD2R

   PEAK FLOW     TIME                                MAXIMUM AVERAGE FLOW
                                                6-HR       24-HR       72-HR     24.92-HR
+    (CFS)       (HR)
                                (CFS)
+     262.     13.50                 66.        18.         17.         17.
                              (INCHES)       1.032       1.125       1.125       1.125
                                (AC-FT)        33.         36.         36.         36.

                          CUMULATIVE AREA =      .60 SQ MI
```



```
*** *** *** *** *** *** *** *** *** *** *** *** *** *** *** *** *** *** *** *** *** *** *** *** *** *** *** *** *** *** *** *** *** *** *** ***

                ***************
                *               *
674 KK          *      CCD2C    *
                *               *
                ***************
                          COMBINE FLOW FROM CD2C AND MARIOCPA DRAIN
                          MARICOPA DRAIN AT 1000 FT EAST OF 75TH AVE AND SOUTH MOUNTAIN AVE. (1/2 MILE
                          BETWEEN DOBBINS AND BASELINE ROADS.)

678 HC          HYDROGRAPH COMBINATION
                      ICOMP           2  NUMBER OF HYDROGRAPHS TO COMBINE

                                                  ***

     ***               ***               ***               ***               ***

                          HYDROGRAPH AT STATION     CCD2C

   PEAK FLOW     TIME                                MAXIMUM AVERAGE FLOW
                                                6-HR       24-HR       72-HR     24.92-HR
+    (CFS)       (HR)
                                (CFS)
+    1128.     13.83               585.       186.        179.        179.
                              (INCHES)        .503        .639        .639        .639
                                (AC-FT)       290.        369.        369.        369.

                          CUMULATIVE AREA =    10.81 SQ MI

*** *** *** *** *** *** *** *** *** *** *** *** *** *** *** *** *** *** *** *** *** *** *** *** *** *** *** *** *** *** *** *** *** *** *** ***

                ***************
                *               *
679 KK          *     RCD3C1    *
                *               *
                ***************
                          MARICOPA DRAIN FROM JUST EAST OF 75TH AVE ALONG POWERLINE RD (INDIAN
                          RESERVATION BOUNDARY).
                          ADJUST SLOPE FROM .0011 TO REFLECT A VELOCITY OF LESS THAN 5 FT/SEC

                HYDROGRAPH ROUTING DATA

683 RS          STORAGE ROUTING
                      NSTPS           2  NUMBER OF SUBREACHES
                       ITYP        ELEV  TYPE OF INITIAL CONDITION
                     RSVRIC       -1.00  INITIAL CONDITION
                          X         .00 WORKING R AND D COEFFICIENT

684 RC          NORMAL DEPTH CHANNEL
                        ANL        .030  LEFT OVERBANK N-VALUE
                       ANCH        .030  MAIN CHANNEL N-VALUE
                        ANR        .030  RIGHT OVERBANK N-VALUE
                       RLNTH      3700.  REACH LENGTH
                        SEL        .0007  ENERGY SLOPE
                      ELMAX          .0  MAX. ELEV. FOR STORAGE/OUTFLOW CALCULATION

                                          CROSS-SECTION DATA
                                --- LEFT OVERBANK --- + ------ MAIN CHANNEL ------- + --- RIGHT OVERBANK ---
686 RY       ELEVATION    986.20    986.10    986.00    981.00    981.00    986.00    986.10    986.20
685 RX       DISTANCE        .00     10.00     20.00     45.00    165.00    190.00    200.00    210.00

                                                  ***

                                      COMPUTED STORAGE-OUTFLOW-ELEVATION DATA

          STORAGE        .00      2.82      5.71      8.66     11.67     14.74     17.88     21.09     24.35     27.68
          OUTFLOW        .00     18.26     58.18    114.79    186.14    271.09    368.87    478.94    600.91    734.45
        ELEVATION     981.00    981.27    981.55    981.82    982.09    982.37    982.64    982.92    983.19    983.46

          STORAGE      31.08     34.53     38.06     41.64     45.29     49.00     52.78     56.62     60.52     64.81
          OUTFLOW     879.34   1035.39   1202.46   1380.43   1569.22   1768.76   1979.01   2199.93   2431.51   2694.91
        ELEVATION     983.74    984.01    984.28    984.56    984.83    985.11    985.38    985.65    985.93    986.20

     ***               ***               ***               ***               ***

                          HYDROGRAPH AT STATION     RCD3C1

   PEAK FLOW     TIME                                MAXIMUM AVERAGE FLOW
                                                6-HR       24-HR       72-HR     24.92-HR
+    (CFS)       (HR)
                                (CFS)
+    1088.     14.25               577.       181.        175.        175.
                              (INCHES)        .496        .624        .624        .624
                                (AC-FT)       286.        360.        360.        360.
```

PEAK STORAGE	TIME		MAXIMUM AVERAGE STORAGE		
		6-HR	24-HR	72-HR	24.92-HR
+ (AC-FT)	(HR)				
18.	14.25	12.	4.	4.	4.

PEAK STAGE	TIME		MAXIMUM AVERAGE STAGE		
		6-HR	24-HR	72-HR	24.92-HR
+ (FEET)	(HR)				
984.10	14.25	983.07	981.76	981.73	981.73

CUMULATIVE AREA = 10.81 SQ MI

*** ***

687 KK * A67AC *

SUB-BASIN A67AC
24-HOUR SCS TYPE II RAINFALL WAS USED TO FIND TC & R FOR THIS BASIN
THIS BASIN USED RAINFALL REDUCTION FACTOR OF .934
L = 1.65 Kb = .042 Adj. Slope = 7.0

SUBBASIN RUNOFF DATA

692 BA SUBBASIN CHARACTERISTICS
TAREA .62 SUBBASIN AREA

PRECIPITATION DATA

32 PB STORM 3.92 BASIN TOTAL PRECIPITATION

32 PI INCREMENTAL PRECIPITATION PATTERN

.00	.00	.00	.00	.00	.00	.00	.00	.00	.00
.00	.00	.00	.00	.00	.00	.00	.00	.00	.00
.00	.00	.00	.00	.00	.00	.00	.00	.00	.00
.00	.00	.00	.00	.00	.00	.00	.00	.00	.00
.00	.00	.00	.00	.00	.00	.00	.00	.00	.00
.00	.00	.00	.00	.00	.00	.00	.00	.00	.00
.00	.00	.00	.00	.00	.00	.00	.00	.00	.00
.00	.00	.00	.00	.00	.00	.00	.00	.00	.00
.00	.00	.00	.00	.00	.00	.00	.00	.00	.00
.00	.00	.00	.00	.00	.00	.00	.00	.00	.00
.00	.00	.00	.00	.00	.00	.00	.00	.00	.00
.00	.00	.00	.00	.00	.00	.00	.00	.00	.00
.00	.00	.00	.00	.00	.00	.00	.01	.00	.01
.01	.01	.01	.01	.01	.01	.01	.01	.03	.03
.03	.09	.09	.09	.01	.01	.01	.01	.01	.01
.01	.01	.01	.01	.01	.01	.00	.00	.00	.00
.00	.00	.00	.00	.00	.00	.00	.00	.00	.00
.00	.00	.00	.00	.00	.00	.00	.00	.00	.00
.00	.00	.00	.00	.00	.00	.00	.00	.00	.00
.00	.00	.00	.00	.00	.00	.00	.00	.00	.00
.00	.00	.00	.00	.00	.00	.00	.00	.00	.00
.00	.00	.00	.00	.00	.00	.00	.00	.00	.00
.00	.00	.00	.00	.00	.00	.00	.00	.00	.00
.00	.00	.00	.00	.00	.00	.00	.00	.00	.00
.00	.00	.00	.00	.00	.00	.00	.00	.00	.00
.00	.00	.00	.00	.00	.00	.00	.00	.00	.00
.00	.00	.00	.00	.00	.00	.00	.00	.00	.00
.00	.00	.00	.00	.00	.00	.00	.00	.00	.00
.00	.00	.00	.00	.00	.00	.00	.00		

693 LG GREEN AND AMPT LOSS RATE
STRTL .25 STARTING LOSS
DTH .25 MOISTURE DEFICIT
PSIF 5.10 WETTING FRONT SUCTION
XKSAT .32 HYDRAULIC CONDUCTIVITY
RTIMP 34.00 PERCENT IMPERVIOUS AREA

694 UC CLARK UNITGRAPH
TC 1.50 TIME OF CONCENTRATION
R 1.14 STORAGE COEFFICIENT

695 UA ACCUMULATED-AREA VS. TIME, 11 ORDINATES

.0	5.0	16.0	30.0	65.0	77.0	84.0	90.0	94.0	97.0
100.0									

***

UNIT HYDROGRAPH PARAMETERS
CLARK TC= 1.50 HR, R= 1.14 HR
SNYDER TP= .83 HR, CP= .42

UNIT HYDROGRAPH
81 END-OF-PERIOD ORDINATES

5.	15.	30.	50.	71.	104.	154.	192.	205.	208.
207.	204.	200.	195.	188.	181.	173.	167.	158.	147.
136.	127.	118.	110.	102.	95.	88.	82.	76.	71.
66.	61.	57.	53.	49.	46.	42.	39.	37.	34.
32.	29.	27.	25.	24.	22.	20.	19.	18.	16.

15.	14.	13.	12.	11.	11.	10.	9.	8.	8.
7.	7.	6.	6.	5.	5.	5.	4.	4.	4.
4.	3.	3.	3.	3.	2.	2.	2.	2.	2.
2.									

*** *** *** *** ***

HYDROGRAPH AT STATION A67AC

TOTAL RAINFALL = 3.92, TOTAL LOSS = 1.83, TOTAL EXCESS = 2.09

PEAK FLOW	TIME			MAXIMUM AVERAGE FLOW		
			6-HR	24-HR	72-HR	24.92-HR
+ (CFS)	(HR)					
		(CFS)				
+ 291.	12.75		111.	34.	33.	33.
		(INCHES)	1.663	2.068	2.069	2.069
		(AC-FT)	55.	68.	68.	68.

CUMULATIVE AREA = .62 SQ MI

*** ***

697 KK * A67AR *

DIVERT RETENTION VOLUME

DT DIVERSION
ISTAD RET67A DIVERSION HYDROGRAPH IDENTIFICATION
DSTRMX 38.40 MAXIMUM VOLUME TO BE DIVERTED

DI INFLOW .00 1000.00 10000.00

DQ DIVERTED FLOW .00 1000.00 10000.00

***

*** *** *** *** ***

DIVERSION HYDROGRAPH RET67A

PEAK FLOW	TIME			MAXIMUM AVERAGE FLOW		
			6-HR	24-HR	72-HR	24.92-HR
+ (CFS)	(HR)					
		(CFS)				
+ 291.	12.75		70.	19.	19.	19.
		(INCHES)	1.059	1.165	1.165	1.165
		(AC-FT)	35.	38.	38.	38.

CUMULATIVE AREA = .62 SQ MI

*** *** *** *** ***

HYDROGRAPH AT STATION A67AR

PEAK FLOW	TIME			MAXIMUM AVERAGE FLOW		
			6-HR	24-HR	72-HR	24.92-HR
+ (CFS)	(HR)					
		(CFS)				
+ 205.	13.58		53.	15.	14.	14.
		(INCHES)	.803	.904	.904	.904
		(AC-FT)	26.	30.	30.	30.

CUMULATIVE AREA = .62 SQ MI

*** ***

702 KK * RCD4C1 *

ROUTE FLOW FROM SUB-BASIN 67AC CPCD4C TO COMPUTATION POINT CPCD4C
CROSS-SECTION REVISED TO REFLECT URBANIZED CONDITIONS

HYDROGRAPH ROUTING DATA

705 RS STORAGE ROUTING
NSTPS 2 NUMBER OF SUBREACHES
ITYP ELEV TYPE OF INITIAL CONDITION
RSVRIC -1.00 INITIAL CONDITION
X .00 WORKING R AND D COEFFICIENT

706 RC NORMAL DEPTH CHANNEL

```
                        ANL          .035  LEFT OVERBANK N-VALUE
                       ANCH          .035  MAIN CHANNEL N-VALUE
                        ANR          .035  RIGHT OVERBANK N-VALUE
                      RLNTH         2600.  REACH LENGTH
                        SEL         .0024  ENERGY SLOPE
                      ELMAX            .0  MAX. ELEV. FOR STORAGE/OUTFLOW CALCULATION

                                   CROSS-SECTION DATA
                        --- LEFT OVERBANK --- + ------ MAIN CHANNEL ------- + --- RIGHT OVERBANK ---
 708 RY       ELEVATION    988.00    987.00    986.00    983.00    983.00    986.00    987.00    988.00
 707 RX       DISTANCE        .00     40.00     50.00     55.00     60.00     65.00     70.00    110.00

                                              ***

                                  COMPUTED STORAGE-OUTFLOW-ELEVATION DATA

           STORAGE       .00       .09       .18       .30       .42       .56       .72       .89      1.07      1.27
           OUTFLOW       .00      1.15      3.73      7.55     12.59     18.89     26.49     35.45     45.84     57.71
         ELEVATION    983.00    983.26    983.53    983.79    984.05    984.32    984.58    984.84    985.11    985.37

           STORAGE      1.47      1.70      1.94      2.25      2.61      3.04      3.62      4.52      5.75      7.31
           OUTFLOW     71.12     86.14    105.20    128.33    154.81    185.24    217.79    261.32    318.74    392.90
         ELEVATION    985.63    985.90    986.16    986.42    986.68    986.95    987.21    987.47    987.74    988.00

     ***          ***          ***          ***          ***

                     HYDROGRAPH AT STATION    RCD4C1

  PEAK FLOW      TIME                          MAXIMUM AVERAGE FLOW
                                          6-HR       24-HR       72-HR     24.92-HR
+   (CFS)        (HR)
                                (CFS)
+     171.      13.92                      53.         15.         14.          14.
                              (INCHES)    .795        .897        .897         .897
                               (AC-FT)     26.         30.         30.          30.

 PEAK STORAGE    TIME                        MAXIMUM AVERAGE STORAGE
                                          6-HR       24-HR       72-HR     24.92-HR
+  (AC-FT)       (HR)
        1.      13.92                       1.          0.          0.           0.

  PEAK STAGE     TIME                          MAXIMUM AVERAGE STAGE
                                          6-HR       24-HR       72-HR     24.92-HR
+   (FEET)       (HR)
    986.82      13.92                   985.02      983.68      983.65       983.65

                      CUMULATIVE AREA =      .62 SQ MI


*** *** *** *** *** *** *** *** *** *** *** *** *** *** *** *** *** *** *** *** *** *** *** *** *** *** *** *** *** *** *** *** ***


            **************
            *            *
 709 KK     *     CD4C   *
            *            *
            **************
                        SUB-BASIN CD4C
                        24-HOUR SCS TYPE II RAINFALL WAS USED TO FIND TC & R FOR THIS BASIN
                        THIS BASIN USED RAINFALL REDUCTION FACTOR OF  .934
                          L =  .64  Kb = .051  Adj. Slope =     9.0

              SUBBASIN RUNOFF DATA

 714 BA         SUBBASIN CHARACTERISTICS
                      TAREA         .19  SUBBASIN AREA

                PRECIPITATION DATA

  32 PB               STORM        3.92  BASIN TOTAL PRECIPITATION

  32 PI           INCREMENTAL PRECIPITATION PATTERN
                     .00      .00      .00      .00      .00      .00      .00      .00      .00      .00
                     .00      .00      .00      .00      .00      .00      .00      .00      .00      .00
                     .00      .00      .00      .00      .00      .00      .00      .00      .00      .00
                     .00      .00      .00      .00      .00      .00      .00      .00      .00      .00
                     .00      .00      .00      .00      .00      .00      .00      .00      .00      .00
                     .00      .00      .00      .00      .00      .00      .00      .00      .00      .00
                     .00      .00      .00      .00      .00      .00      .00      .00      .00      .00
                     .00      .00      .00      .00      .00      .00      .00      .00      .00      .00
                     .00      .00      .00      .00      .00      .00      .00      .00      .00      .00
                     .00      .00      .00      .00      .00      .00      .00      .00      .00      .00
                     .00      .00      .00      .00      .00      .00      .00      .00      .00      .00
                     .00      .00      .00      .00      .00      .00      .00      .00      .00      .00
                     .00      .00      .00      .00      .00      .00      .00      .01      .00      .01
                     .01      .01      .01      .01      .01      .01      .01      .01      .03      .03
                     .03      .09      .09      .09      .01      .01      .01      .01      .01      .01
                     .01      .01      .01      .01      .01      .01      .00      .00      .00      .00
                     .00      .00      .00      .00      .00      .00      .00      .00      .00      .00
                     .00      .00      .00      .00      .00      .00      .00      .00      .00      .00
                     .00      .00      .00      .00      .00      .00      .00      .00      .00      .00
                     .00      .00      .00      .00      .00      .00      .00      .00      .00      .00
                     .00      .00      .00      .00      .00      .00      .00      .00      .00      .00
```



```
                     .00      .00      .00      .00      .00      .00      .00      .00      .00      .00
                     .00      .00      .00      .00      .00      .00      .00      .00      .00      .00
                     .00      .00      .00      .00      .00      .00      .00      .00      .00      .00
                     .00      .00      .00      .00      .00      .00      .00      .00      .00      .00
                     .00      .00      .00      .00      .00      .00      .00      .00      .00      .00
                     .00      .00      .00      .00      .00      .00      .00      .00      .00      .00
                     .00      .00      .00      .00      .00      .00      .00      .00      .00      .00
                     .00      .00      .00      .00      .00      .00      .00      .00

 715 LG         GREEN AND AMPT LOSS RATE
                      STRTL         .25  STARTING LOSS
                        DTH         .25  MOISTURE DEFICIT
                       PSIF        4.90  WETTING FRONT SUCTION
                      XKSAT         .35  HYDRAULIC CONDUCTIVITY
                      RTIMP       29.00  PERCENT IMPERVIOUS AREA

 716 UC         CLARK UNITGRAPH
                         TC         .77  TIME OF CONCENTRATION
                          R         .50  STORAGE COEFFICIENT

 717 UA         ACCUMULATED-AREA VS. TIME,  11 ORDINATES
                      .0       5.0      16.0      30.0      65.0      77.0      84.0      90.0      94.0      97.0
                   100.0

                                              ***

                                     UNIT HYDROGRAPH PARAMETERS
                                CLARK   TC=   .77 HR,        R=   .50 HR
                               SNYDER   TP=   .41 HR,       CP=   .47

                                          UNIT HYDROGRAPH
                                     36 END-OF-PERIOD ORDINATES
               7.       26.       59.      107.      138.      137.      130.      120.      109.       97.
              83.       70.       60.       50.       43.       36.       31.       26.       22.       18.
              16.       13.       11.        9.        8.        7.        6.        5.        4.        3.
               3.        2.        2.        2.        2.        1.

     ***          ***          ***          ***          ***

                     HYDROGRAPH AT STATION    CD4C

     TOTAL RAINFALL =    3.92, TOTAL LOSS =    1.99, TOTAL EXCESS =    1.93

  PEAK FLOW      TIME                          MAXIMUM AVERAGE FLOW
                                          6-HR       24-HR       72-HR     24.92-HR
+   (CFS)        (HR)
                                (CFS)
+     165.      12.33                      32.         10.          9.           9.
                              (INCHES)   1.589       1.916       1.918        1.918
                               (AC-FT)     16.         19.         19.          19.

                      CUMULATIVE AREA =      .19 SQ MI


*** *** *** *** *** *** *** *** *** *** *** *** *** *** *** *** *** *** *** *** *** *** *** *** *** *** *** *** *** *** *** *** ***


            **************
            *            *
 719 KK     *     CD4R   *
            *            *
            **************
                        DIVERT RETENTION VOLUME

     DT          DIVERSION
                        ISTAD       RETD4C  DIVERSION HYDROGRAPH IDENTIFICATION
                       DSTRMX        13.60  MAXIMUM VOLUME TO BE DIVERTED

     DI                INFLOW          .00   1000.00  10000.00

     DQ        DIVERTED FLOW           .00   1000.00  10000.00
                                                         ***

     ***          ***          ***          ***          ***

                     DIVERSION HYDROGRAPH    RETD4C

  PEAK FLOW      TIME                          MAXIMUM AVERAGE FLOW
                                          6-HR       24-HR       72-HR     24.92-HR
+   (CFS)        (HR)
                                (CFS)
+     165.      12.33                      25.          7.          7.           7.
                              (INCHES)   1.244       1.342       1.342        1.342
                               (AC-FT)     13.         14.         14.          14.

                      CUMULATIVE AREA =      .19 SQ MI

     ***          ***          ***          ***          ***

                     HYDROGRAPH AT STATION    CD4R

  PEAK FLOW      TIME                          MAXIMUM AVERAGE FLOW
```

PEAK FLOW	TIME		6-HR	24-HR	72-HR	24.92-HR
+ (CFS)	(HR)					
		(CFS)				
+ 62.	13.00		10.	3.	3.	3.
		(INCHES)	.491	.576	.576	.576
		(AC-FT)	5.	6.	6.	6.

CUMULATIVE AREA = .19 SQ MI

*** ***

```
          **************
          *            *
724 KK    *   CPCD4C   *
          *            *
          **************
```

COMBINE ROUTED FLOW FROM SUB-BASIN 67AC TO RUNOFF FROM SUB-BASIN CD4C

726 HC HYDROGRAPH COMBINATION
ICOMP 2 NUMBER OF HYDROGRAPHS TO COMBINE

***

*** *** *** *** ***

HYDROGRAPH AT STATION CPCD4C

PEAK FLOW	TIME		MAXIMUM AVERAGE FLOW			
			6-HR	24-HR	72-HR	24.92-HR
+ (CFS)	(HR)					
		(CFS)				
+ 189.	13.92		62.	18.	17.	17.
		(INCHES)	.711	.821	.821	.821
		(AC-FT)	31.	35.	35.	35.

CUMULATIVE AREA = .81 SQ MI

*** ***

```
          **************
          *            *
727 KK    *   RCD3C2   *
          *            *
          **************
```

ROUTE FLOW FROM COMPUTATION POINT CPCD4C TO COMPUTATION POINT CPCD3C
CROSS-SECTION REVISED TO REFLECT URBANIZED CONDITIONS

HYDROGRAPH ROUTING DATA

730 RS STORAGE ROUTING

	NSTPS	3	NUMBER OF SUBREACHES
	ITYP	ELEV	TYPE OF INITIAL CONDITION
	RSVRIC	-1.00	INITIAL CONDITION
	X	.00	WORKING R AND D COEFFICIENT

731 RC NORMAL DEPTH CHANNEL

	ANL	.035	LEFT OVERBANK N-VALUE
	ANCH	.035	MAIN CHANNEL N-VALUE
	ANR	.035	RIGHT OVERBANK N-VALUE
	RLNTH	5200.	REACH LENGTH
	SEL	.0024	ENERGY SLOPE
	ELMAX	.0	MAX. ELEV. FOR STORAGE/OUTFLOW CALCULATION

CROSS-SECTION DATA

		--- LEFT OVERBANK ---	+	------ MAIN CHANNEL	-------		+ --- RIGHT OVERBANK ---	
733 RY	ELEVATION	988.00	987.00	986.00	983.00	983.00	986.00	987.00	988.00
732 RX	DISTANCE	.00	40.00	50.00	55.00	60.00	65.00	70.00	110.00

***

COMPUTED STORAGE-OUTFLOW-ELEVATION DATA

STORAGE	.00	.17	.37	.60	.85	1.13	1.44	1.77	2.14	2.53
OUTFLOW	.00	1.15	3.73	7.55	12.59	18.89	26.49	35.45	45.84	57.71
ELEVATION	983.00	983.26	983.53	983.79	984.05	984.32	984.58	984.84	985.11	985.37
STORAGE	2.95	3.40	3.89	4.49	5.23	6.08	7.24	9.04	11.50	14.63
OUTFLOW	71.12	86.14	105.20	128.33	154.81	185.24	217.79	261.32	318.74	392.90
ELEVATION	985.63	985.90	986.16	986.42	986.68	986.95	987.21	987.47	987.74	988.00

*** *** *** *** ***

HYDROGRAPH AT STATION RCD3C2

PEAK FLOW	TIME	MAXIMUM AVERAGE FLOW			
		6-HR	24-HR	72-HR	24.92-HR
+ (CFS)	(HR)				

		(CFS)				
+ 166.	14.33		61.	18.	17.	17.
		(INCHES)	.698	.808	.808	.808
		(AC-FT)	30.	35.	35.	35.

PEAK STORAGE	TIME	MAXIMUM AVERAGE STORAGE			
		6-HR	24-HR	72-HR	24.92-HR
+ (AC-FT)	(HR)				
2.	14.33	1.	0.	0.	0.

PEAK STAGE	TIME	MAXIMUM AVERAGE STAGE			
		6-HR	24-HR	72-HR	24.92-HR
+ (FEET)	(HR)				
986.78	14.33	985.23	983.78	983.75	983.75

CUMULATIVE AREA = .81 SQ MI

*** ***

```
          **************
          *            *
734 KK    *    CD3C    *
          *            *
          **************
```

SUB-BASIN CD3C
24-HOUR SCS TYPE II RAINFALL WAS USED TO FIND TC & R FOR THIS BASIN
THIS BASIN USED RAINFALL REDUCTION FACTOR OF .934
L = 1.15 Kb = .044 Adj. Slope = 10.0

SUBBASIN RUNOFF DATA

739 BA SUBBASIN CHARACTERISTICS
TAREA .48 SUBBASIN AREA

PRECIPITATION DATA

32 PB STORM 3.92 BASIN TOTAL PRECIPITATION

32 PI INCREMENTAL PRECIPITATION PATTERN

.00	.00	.00	.00	.00	.00	.00	.00	.00	.00
.00	.00	.00	.00	.00	.00	.00	.00	.00	.00
.00	.00	.00	.00	.00	.00	.00	.00	.00	.00
.00	.00	.00	.00	.00	.00	.00	.00	.00	.00
.00	.00	.00	.00	.00	.00	.00	.00	.00	.00
.00	.00	.00	.00	.00	.00	.00	.00	.00	.00
.00	.00	.00	.00	.00	.00	.00	.00	.00	.00
.00	.00	.00	.00	.00	.00	.00	.00	.00	.00
.00	.00	.00	.00	.00	.00	.00	.00	.00	.00
.00	.00	.00	.00	.00	.00	.00	.00	.00	.00
.00	.00	.00	.00	.00	.00	.00	.00	.00	.00
.00	.00	.00	.00	.00	.00	.00	.00	.00	.00
.00	.00	.00	.00	.00	.00	.00	.01	.00	.01
.01	.01	.01	.01	.01	.01	.01	.01	.03	.03
.03	.09	.09	.09	.01	.01	.01	.01	.01	.01
.01	.01	.01	.01	.01	.01	.00	.00	.00	.00
.00	.00	.00	.00	.00	.00	.00	.00	.00	.00
.00	.00	.00	.00	.00	.00	.00	.00	.00	.00
.00	.00	.00	.00	.00	.00	.00	.00	.00	.00
.00	.00	.00	.00	.00	.00	.00	.00	.00	.00
.00	.00	.00	.00	.00	.00	.00	.00	.00	.00
.00	.00	.00	.00	.00	.00	.00	.00	.00	.00
.00	.00	.00	.00	.00	.00	.00	.00	.00	.00
.00	.00	.00	.00	.00	.00	.00	.00	.00	.00
.00	.00	.00	.00	.00	.00	.00	.00	.00	.00
.00	.00	.00	.00	.00	.00	.00	.00	.00	.00
.00	.00	.00	.00	.00	.00	.00	.00	.00	.00
.00	.00	.00	.00	.00	.00	.00	.00	.00	.00
.00	.00	.00	.00	.00	.00	.00	.00		

740 LG GREEN AND AMPT LOSS RATE

	STRTL	.24	STARTING LOSS
	DTH	.15	MOISTURE DEFICIT
	PSIF	7.00	WETTING FRONT SUCTION
	XKSAT	.14	HYDRAULIC CONDUCTIVITY
	RTIMP	33.00	PERCENT IMPERVIOUS AREA

741 UC CLARK UNITGRAPH

	TC	.93	TIME OF CONCENTRATION
	R	.58	STORAGE COEFFICIENT

742 UA ACCUMULATED-AREA VS. TIME, 11 ORDINATES

.0	5.0	16.0	30.0	65.0	77.0	84.0	90.0	94.0	97.0
100.0									

***

UNIT HYDROGRAPH PARAMETERS
CLARK TC= .93 HR, R= .58 HR
SNYDER TP= .50 HR, CP= .48

UNIT HYDROGRAPH
42 END-OF-PERIOD ORDINATES

11.	44.	91.	171.	260.	298.	295.	283.	266.	246.
226.	204.	177.	154.	133.	115.	100.	86.	75.	65.
56.	48.	42.	36.	31.	27.	24.	20.	18.	15.
13.	11.	10.	9.	7.	6.	6.	5.	4.	4.
3.	3.								

*** *** *** *** ***

HYDROGRAPH AT STATION CD3C

TOTAL RAINFALL = 3.92, TOTAL LOSS = 1.60, TOTAL EXCESS = 2.32

	PEAK FLOW	TIME		MAXIMUM AVERAGE FLOW			
				6-HR	24-HR	72-HR	24.92-HR
+	(CFS)	(HR)					
			(CFS)				
+	428.	12.42		100.	30.	29.	29.
			(INCHES)	1.935	2.307	2.310	2.310
			(AC-FT)	50.	59.	59.	59.

CUMULATIVE AREA = .48 SQ MI

*** ***

744 KK — CD3R

DIVERT RETENTION VOLUME
RELAXED RETENTION VOLUME FROM 35.2 AC-FT.

DT	DIVERSION ISTAD		RETD3C	DIVERSION HYDROGRAPH IDENTIFICATION	
	DSTRMX		32.60	MAXIMUM VOLUME TO BE DIVERTED	
DI	INFLOW	.00	1000.00	10000.00	
DQ	DIVERTED FLOW	.00	1000.00	10000.00	

***

*** *** *** *** ***

DIVERSION HYDROGRAPH RETD3C

	PEAK FLOW	TIME		MAXIMUM AVERAGE FLOW			
				6-HR	24-HR	72-HR	24.92-HR
+	(CFS)	(HR)					
			(CFS)				
+	428.	12.42		60.	16.	16.	16.
			(INCHES)	1.171	1.273	1.273	1.273
			(AC-FT)	30.	33.	33.	33.

CUMULATIVE AREA = .48 SQ MI

*** *** *** *** ***

HYDROGRAPH AT STATION CD3R

	PEAK FLOW	TIME		MAXIMUM AVERAGE FLOW			
				6-HR	24-HR	72-HR	24.92-HR
+	(CFS)	(HR)					
			(CFS)				
+	321.	12.83		48.	13.	13.	13.
			(INCHES)	.932	1.036	1.036	1.036
			(AC-FT)	24.	27.	27.	27.

CUMULATIVE AREA = .48 SQ MI

*** ***

750 KK — CPCD3C

COMBINE ROUTED FLOW FROM COMPUTATION POINT CPCD4C, ROUTED FLOW FROM DIVERSION POINT AT BASELINE ROAD WITH RUNOFF FROM SUB-BASIN CD3C

753 HC	HYDROGRAPH COMBINATION ICOMP	3	NUMBER OF HYDROGRAPHS TO COMBINE

***

*** *** *** *** ***

HYDROGRAPH AT STATION CPCD3C

PEAK FLOW	TIME	MAXIMUM AVERAGE FLOW			
		6-HR	24-HR	72-HR	24.92-HR
(CFS)	(HR)	(CFS)			
1300.	14.25	664.	212.	204.	204.
		.511	.652	.652	.652
		329.	421.	421.	421.

CUMULATIVE AREA = 12.10 SQ MI

1

RUNOFF SUMMARY
FLOW IN CUBIC FEET PER SECOND
TIME IN HOURS, AREA IN SQUARE MILES

OPERATION	STATION	PEAK FLOW	TIME OF PEAK	AVERAGE FLOW FOR MAXIMUM PERIOD 6-HOUR	24-HOUR	72-HOUR	BASIN AREA	MAXIMUM STAGE	TIME OF MAX STAGE
HYDROGRAPH AT	VR47C	460.	12.67	152.	45.	44.	.87		
DIVERSION TO	RET47C	460.	14.25	127.	34.	33.	.87		
HYDROGRAPH AT	VR47R	157.	14.25	38.	11.	11.	.87		
ROUTED TO	RBR511	97.	14.92	36.	11.	10.	.87		
								1003.89	14.92
HYDROGRAPH AT	AVR51C	261.	12.33	55.	16.	16.	.28		
DIVERSION TO	RET51C	261.	13.00	41.	11.	10.	.28		
HYDROGRAPH AT	AVR51R	133.	13.00	19.	6.	5.	.28		
ROUTED TO	RBR512	82.	13.58	19.	5.	5.	.28		
								1008.64	13.58
HYDROGRAPH AT	BR51C	432.	12.58	122.	37.	36.	.70		
DIVERSION TO	RET159	432.	13.58	94.	25.	25.	.70		
HYDROGRAPH AT	BR51R	196.	13.58	40.	12.	11.	.70		
3 COMBINED AT	CB51C	278.	13.58	92.	28.	27.	1.85		
HYDROGRAPH AT	DR43C	1391.	12.17	176.	55.	53.	.92		
DIVERSION TO	RET43C	451.	12.17	45.	14.	14.	.92		
HYDROGRAPH AT	DR43R	1391.	12.17	150.	41.	39.	.92		
ROUTED TO	43BASN	20.	12.17	20.	11.	10.	.92		
								7.82	16.75
ROUTED TO	ROA51A	20.	24.92	20.	11.	10.	.92		
ROUTED TO	ROA51B	20.	24.92	20.	11.	10.	.92		
HYDROGRAPH AT	OA51B	2353.	12.00	191.	57.	55.	1.03		
DIVERSION TO	RET51	2353.	12.17	153.	41.	39.	1.03		
HYDROGRAPH AT	OA51R	900.	12.17	55.	16.	16.	1.03		
ROUTED TO	DRBASN	20.	13.50	20.	10.	10.	1.03		
								2.15	15.42
HYDROGRAPH AT	ER47B	777.	12.00	63.	19.	18.	.34		
ROUTED TO	ERBASN	20.	11.75	20.	13.	12.	.34		
								4.39	13.00
ROUTED TO	RER47B	20.	12.08	20.	13.	12.	.34		
3 COMBINED AT	CDR51	60.	13.50	60.	33.	32.	2.29		
ROUTED TO	RDR51A	60.	13.58	60.	33.	32.	2.29		
HYDROGRAPH AT									

+		SM51C	327.	12.42	79.	22.	22.	.51	
	DIVERSION TO								
+		RET51C	327.	12.92	44.	12.	11.	.51	
	HYDROGRAPH AT								
+		SM51R	248.	12.92	40.	11.	10.	.51	
	ROUTED TO								
+		RB2591	198.	13.25	40.	11.	10.	.51	
+									1028.07 13.25
	2 COMBINED AT								
+		C51SM	258.	13.25	100.	44.	42.	2.80	
	ROUTED TO								
+		RDR51B	254.	13.25	100.	44.	42.	2.80	
	ROUTED TO								
+		BRBASN	50.	13.33	50.	26.	25.	2.80	
+									4.10 24.92
	ROUTED TO								
+		DBR51	50.	24.92	50.	26.	25.	2.80	
	2 COMBINED AT								
+		CB51D	328.	13.58	142.	54.	52.	4.66	
	ROUTED TO								
+		RB1591	220.	14.33	137.	51.	49.	4.66	
+									996.33 14.33
	HYDROGRAPH AT								
+		AVR55C	152.	12.58	51.	15.	14.	.24	
	DIVERSION TO								
+		RET55C	152.	15.17	48.	13.	12.	.24	
	HYDROGRAPH AT								
+		AVR55R	23.	15.17	7.	2.	2.	.24	
	ROUTED TO								
+		RB1592	13.	16.25	6.	2.	2.	.24	
+									999.96 16.25
	HYDROGRAPH AT								
+		BR159C	300.	12.67	110.	33.	32.	.68	
	DIVERSION TO								
+		RET159	300.	13.67	73.	20.	19.	.68	
	HYDROGRAPH AT								
+		BR159R	193.	13.67	48.	14.	13.	.68	
	HYDROGRAPH AT								
+		VR59C	117.	12.75	39.	10.	10.	.23	
	ROUTED TO								
+		RB1593	114.	13.00	39.	10.	10.	.23	
+									1000.83 13.00
	4 COMBINED AT								
+		CB159N	401.	14.17	212.	76.	74.	5.81	
	HYDROGRAPH AT								
+		ER55B	205.	12.42	46.	14.	13.	.26	
	DIVERSION TO								
+		RET55	205.	13.25	36.	10.	9.	.26	
	HYDROGRAPH AT								
+		ER55R	82.	13.25	13.	4.	4.	.26	
	ROUTED TO								
+		RE59B	55.	13.67	13.	4.	4.	.26	
+									1021.79 13.67
	HYDROGRAPH AT								
+		ER59B	274.	12.25	64.	21.	21.	.26	
	DIVERSION TO								
+		RET59	274.	12.67	41.	12.	11.	.26	
	HYDROGRAPH AT								
+		ER59R	194.	12.67	33.	10.	9.	.26	
	2 COMBINED AT								
+		CER59B	194.	12.67	46.	14.	13.	.51	
	ROUTED TO								
+		RCERB	116.	13.17	45.	13.	13.	.51	
+									1028.33 13.17
	HYDROGRAPH AT								
+		OA55C	97.	12.75	37.	11.	10.	.25	

	DIVERSION TO								
+		RET55C	27.	12.75	4.	1.	1.	.25	
	HYDROGRAPH AT								
+		OA55R	97.	12.75	36.	9.	9.	.25	
	ROUTED TO								
+		RD57C	90.	13.17	35.	9.	9.	.25	
+									1023.76 13.17
	HYDROGRAPH AT								
+		DR57C	40.	12.75	16.	5.	5.	.12	
	DIVERSION TO								
+		RET27	40.	.00	16.	5.	5.	.12	
	HYDROGRAPH AT								
+		DR57R	0.	.00	0.	0.	0.	.12	
	2 COMBINED AT								
+		CDR57C	90.	13.17	35.	9.	9.	.36	
	ROUTED TO								
+		RD59C	89.	13.33	35.	9.	9.	.36	
+									1020.32 13.33
	HYDROGRAPH AT								
+		DR59C	45.	12.83	21.	7.	6.	.12	
	DIVERSION TO								
+		RET59C	45.	15.67	19.	5.	5.	.12	
	HYDROGRAPH AT								
+		DR59R	13.	15.67	5.	1.	1.	.12	
	3 COMBINED AT								
+		CDR59C	203.	13.17	83.	24.	23.	1.00	
	ROUTED TO								
+		RB259	188.	13.75	81.	24.	23.	1.00	
+									1027.95 13.75
	HYDROGRAPH AT								
+		BR259C	778.	12.42	180.	55.	53.	1.01	
	DIVERSION TO								
+		RET259	778.	13.00	124.	34.	33.	1.01	
	HYDROGRAPH AT								
+		BR259R	456.	13.00	74.	21.	21.	1.01	
	2 COMBINED AT								
+		CB259S	493.	13.00	156.	45.	44.	2.01	
	2 COMBINED AT								
+		CB259	685.	14.08	367.	122.	117.	7.81	
	ROUTED TO								
+		RBR163	677.	14.17	364.	120.	115.	7.81	
+									995.16 14.17
	HYDROGRAPH AT								
+		BR263C	294.	12.50	89.	28.	27.	.49	
	DIVERSION TO								
+		RET263	294.	13.08	53.	15.	14.	.49	
	HYDROGRAPH AT								
+		BR263R	218.	13.08	47.	13.	13.	.49	
	2 COMBINED AT								
+		63S	757.	14.08	410.	133.	128.	8.31	
	HYDROGRAPH AT								
+		BR163C	208.	12.33	43.	12.	12.	.25	
	DIVERSION TO								
+		RET163	163.	12.33	12.	3.	3.	.25	
	HYDROGRAPH AT								
+		BR163R	208.	12.33	34.	9.	9.	.25	
	2 COMBINED AT								
+		CB163	780.	14.08	427.	142.	137.	8.56	
	ROUTED TO								
+		RCD1C	775.	14.25	425.	140.	135.	8.56	
+									993.61 14.25
	HYDROGRAPH AT								
+		BR67C	67.	12.67	23.	6.	6.	.13	
	ROUTED TO								
+		RCD1C2	63.	12.92	23.	6.	6.	.13	
+									991.14 12.92

+	HYDROGRAPH AT	CD1C	552.	12.25	79.	24.	23.	.46	
+	DIVERSION TO	RET1C	552.	12.58	60.	16.	16.	.46	
+	HYDROGRAPH AT	CD1R	259.	12.58	27.	8.	8.	.46	
+	3 COMBINED AT	CPCD1C	822.	14.17	470.	154.	148.	9.15	
+	ROUTED TO	RCD2C1	816.	14.42	462.	150.	144.	9.15	
+									987.75 14.42
+	HYDROGRAPH AT	IR63B	127.	12.25	30.	10.	10.	.12	
+	DIVERSION TO	RET63	127.	12.75	20.	6.	5.	.12	
+	HYDROGRAPH AT	IR63	79.	12.75	16.	5.	4.	.12	
+	ROUTED TO	RIR65C	62.	13.17	15.	5.	4.	.12	
+									3.58 13.17
+	HYDROGRAPH AT	IR65C	112.	12.33	26.	8.	7.	.17	
+	DIVERSION TO	RET65C	112.	17.17	26.	7.	7.	.17	
+	HYDROGRAPH AT	IR65R	2.	17.17	1.	0.	0.	.17	
+	2 COMBINED AT	CIR65C	62.	13.17	16.	5.	5.	.29	
+	ROUTED TO	RIRDC	47.	13.67	15.	5.	5.	.29	
+									1011.44 13.67
+	DIVERSION TO	RIR65C	30.	13.67	13.	4.	4.	.29	
+	HYDROGRAPH AT	DIIRDC	17.	13.67	2.	1.	1.	.29	
+	HYDROGRAPH AT	IRDC	397.	12.42	110.	36.	34.	.52	
+	DIVERSION TO	RETRDC	397.	13.17	78.	22.	21.	.52	
+	HYDROGRAPH AT	IRDR	225.	13.17	47.	14.	13.	.52	
+	2 COMBINED AT	CIRDC	225.	13.17	49.	14.	14.	.82	
+	ROUTED TO	RIRSMC	197.	13.42	49.	14.	14.	.82	
+									1001.64 13.42
+	HYDROGRAPH AT	IRSMC	285.	12.17	42.	13.	13.	.24	
+	DIVERSION TO	RETSMC	285.	12.83	36.	10.	9.	.24	
+	HYDROGRAPH AT	IRSMR	74.	12.83	11.	3.	3.	.24	
+	2 COMBINED AT	CIRSMS	221.	13.42	59.	18.	17.	1.06	
+	2 COMBINED AT	CIRSMC	927.	13.92	519.	168.	162.	10.21	
+	HYDROGRAPH AT	CD2C	337.	12.75	128.	38.	37.	.60	
+	DIVERSION TO	RET2C	337.	13.50	74.	20.	19.	.60	
+	HYDROGRAPH AT	CD2R	262.	13.50	66.	18.	17.	.60	
+	2 COMBINED AT	CCD2C	1128.	13.83	585.	186.	179.	10.81	
+	ROUTED TO	RCD3C1	1088.	14.25	577.	181.	175.	10.81	

+									984.10 14.25
+	HYDROGRAPH AT	A67AC	291.	12.75	111.	34.	33.	.62	
+	DIVERSION TO	RET67A	291.	13.58	70.	19.	19.	.62	
+	HYDROGRAPH AT	A67AR	205.	13.58	53.	15.	14.	.62	
+	ROUTED TO	RCD4C1	171.	13.92	53.	15.	14.	.62	
+									986.82 13.92
+	HYDROGRAPH AT	CD4C	165.	12.33	32.	10.	9.	.19	
+	DIVERSION TO	RETD4C	165.	13.00	25.	7.	7.	.19	
+	HYDROGRAPH AT	CD4R	62.	13.00	10.	3.	3.	.19	
+	2 COMBINED AT	CPCD4C	189.	13.92	62.	18.	17.	.81	
+	ROUTED TO	RCD3C2	166.	14.33	61.	18.	17.	.81	
+									986.78 14.33
+	HYDROGRAPH AT	CD3C	428.	12.42	100.	30.	29.	.48	
+	DIVERSION TO	RETD3C	428.	12.83	60.	16.	16.	.48	
+	HYDROGRAPH AT	CD3R	321.	12.83	48.	13.	13.	.48	
+	3 COMBINED AT	CPCD3C	1300.	14.25	664.	212.	204.	12.10	

1

SUMMARY OF KINEMATIC WAVE - MUSKINGUM-CUNGE ROUTING
(FLOW IS DIRECT RUNOFF WITHOUT BASE FLOW)

ISTAQ	ELEMENT	DT	PEAK	TIME TO PEAK	VOLUME	INTERPOLATED TO COMPUTATION INTERVAL DT	PEAK	TIME TO PEAK	VOLUME
		(MIN)	(CFS)	(MIN)	(IN)	(MIN)	(CFS)	(MIN)	(IN)
ROA51A	MANE	2.07	20.13	1496.05	.43	5.00	20.06	1495.00	.43

CONTINUITY SUMMARY (AC-FT) - INFLOW= .2132E+02 EXCESS= .0000E+00 OUTFLOW= .2121E+02 BASIN STORAGE= .1149E+00 PERCENT ERROR= .0

ROA51B	MANE	2.10	20.13	1495.80	.43	5.00	20.08	1495.00	.43

CONTINUITY SUMMARY (AC-FT) - INFLOW= .2119E+02 EXCESS= .0000E+00 OUTFLOW= .2107E+02 BASIN STORAGE= .1222E+00 PERCENT ERROR= .0

RER47B	MANE	4.64	20.00	1499.45	1.38	5.00	20.00	1495.00	1.38

CONTINUITY SUMMARY (AC-FT) - INFLOW= .2543E+02 EXCESS= .0000E+00 OUTFLOW= .2509E+02 BASIN STORAGE= .4276E+00 PERCENT ERROR= -.3

RDR51A	MANE	.74	60.00	811.92	.54	5.00	60.00	815.00	.54

CONTINUITY SUMMARY (AC-FT) - INFLOW= .6561E+02 EXCESS= .0000E+00 OUTFLOW= .6554E+02 BASIN STORAGE= .9705E-01 PERCENT ERROR= .0

RDR51B	MANE	1.03	256.77	796.63	.58	5.00	253.64	795.00	.58

CONTINUITY SUMMARY (AC-FT) - INFLOW= .8683E+02 EXCESS= .0000E+00 OUTFLOW= .8639E+02 BASIN STORAGE= .4605E+00 PERCENT ERROR= .0

DBR51	MANE	1.82	50.34	1495.79	.35	5.00	50.19	1495.00	.35

CONTINUITY SUMMARY (AC-FT) - INFLOW= .5227E+02 EXCESS= .0000E+00 OUTFLOW= .5204E+02 BASIN STORAGE= .2464E+00 PERCENT ERROR= .0

*** NORMAL END OF HEC-1 ***

Alt 6

67th Avenue Channel (Vinyard to Laveen Conveyance Channel)
Worksheet for Trapezoidal Channel

Project Description	
Worksheet	67th Avneue Ch
Flow Element	Trapezoidal Cha
Method	Manning's Formu
Solve For	Channel Depth

Input Data		
Mannings Coeffic	0.035	
Slope	001500	ft/ft
Left Side Slope	5.00	H : V
Right Side Slope	5.00	H : V
Bottom Width	10.00	ft
Discharge	205.00	cfs

Results		
Depth	3.14	ft
Flow Area	80.7	ft²
Wetted Perim	42.02	ft
Top Width	41.40	ft
Critical Depth	1.76	ft
Critical Slope	0.017093	ft/ft
Velocity	2.54	ft/s
Velocity Head	0.10	ft
Specific Energ	3.24	ft
Froude Numb	0.32	
Flow Type	Subcritical	

67th Avnue Channel (Vinyard to Laveen Conveyance Channel)
Cross Section for Trapezoidal Channel

Project Description	
Worksheet	67th Avneue Ch
Flow Element	Trapezoidal Cha
Method	Manning's Formu
Solve For	Channel Depth

Section Data		
Mannings Coeffic	0.035	
Slope	001500	ft/ft
Depth	3.14	ft
Left Side Slope	5.00	H : V
Right Side Slope	5.00	H : V
Bottom Width	10.00	ft
Discharge	205.00	cfs

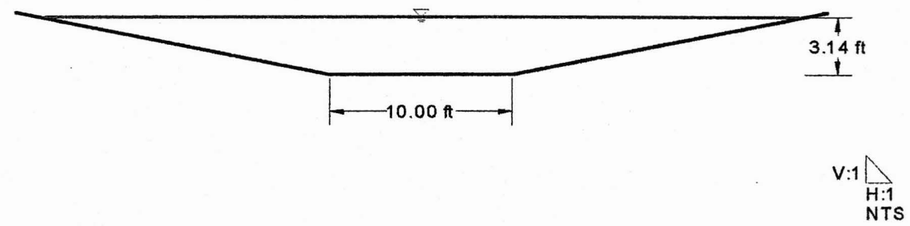

67th Avenue Storm Drain (Vinyard to Salt River)
Worksheet for Circular Channel

Project Description	
Worksheet	67th Avneue Storm Drain (Vinyard to S
Flow Element	Circular Channel
Method	Manning's Formula
Solve For	Channel Depth

Input Data		
Mannings Coeffic	0.013	
Slope	001500	ft/ft
Diameter	84	in
Discharge	205.00	cfs

Results		
Depth	4.86	ft
Flow Area	28.5	ft²
Wetted Perime	13.79	ft
Top Width	6.45	ft
Critical Depth	3.74	ft
Percent Full	69.4	%
Critical Slope	0.003311	ft/ft
Velocity	7.19	ft/s
Velocity Head	0.80	ft
Specific Energ:	5.66	ft
Froude Numbe	0.60	
Maximum Disc	266.14	cfs
Discharge Full	247.41	cfs
Slope Full	0.001030	ft/ft
Flow Type	Subcritical	

67th Avneue Storm Drain (Vinyard to Salt River)
Cross Section for Circular Channel

Project Description	
Worksheet	67th Avneue Storm Drain (Vinyard to S
Flow Element	Circular Channel
Method	Manning's Formula
Solve For	Channel Depth

Section Data		
Mannings Coeffic	0.013	
Slope	001500	ft/ft
Depth	4.86	ft
Diameter	84	in
Discharge	205.00	cfs

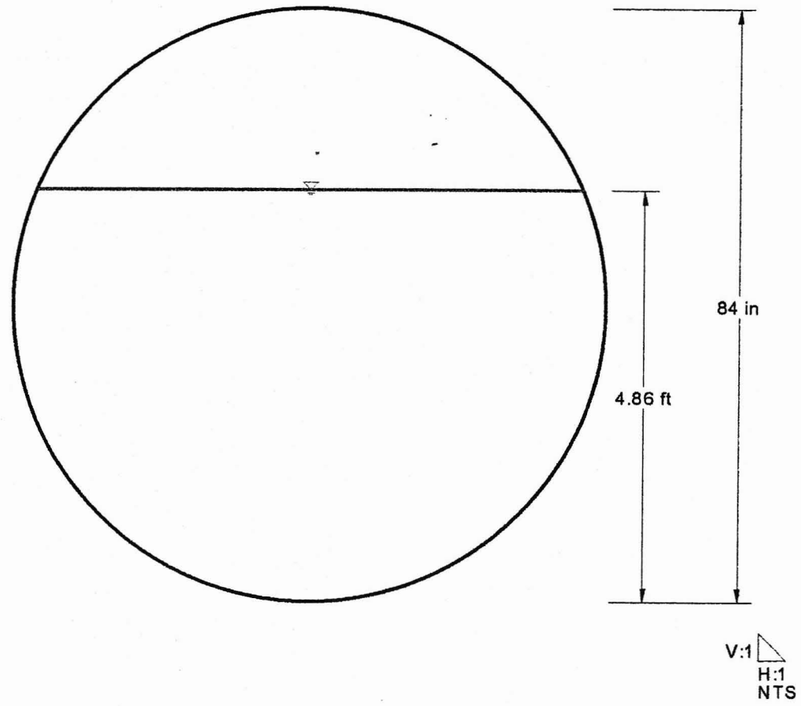

Pipline Connection to Laveen Conveyance Channel
Worksheet for Circular Channel

Project Description	
Worksheet	Alt 6A Connection to
Flow Element	Circular Channel
Method	Manning's Formula
Solve For	Channel Depth

Input Data		
Mannings Coeffic	0.013	
Slope	003000	ft/ft
Diameter	48	in
Discharge	50.00	cfs

Results		
Depth	2.32	ft
Flow Area	7.5	ft²
Wetted Perime	6.92	ft
Top Width	3.95	ft
Critical Depth	2.12	ft
Percent Full	57.9	%
Critical Slope	0.003977	ft/ft
Velocity	6.63	ft/s
Velocity Head	0.68	ft
Specific Energ:	3.00	ft
Froude Numbe	0.85	
Maximum Disc	84.63	cfs
Discharge Full	78.67	cfs
Slope Full	0.001212	ft/ft
Flow Type	Subcritical	

Pipeline Connection To Laveen Conveyance Channel
Cross Section for Circular Channel

Project Description	
Worksheet	Alt 6A Connection to
Flow Element	Circular Channel
Method	Manning's Formula
Solve For	Channel Depth

Section Data		
Mannings Coeffic	0.013	
Slope	003000	ft/ft
Depth	2.32	ft
Diameter	48	in
Discharge	50.00	cfs

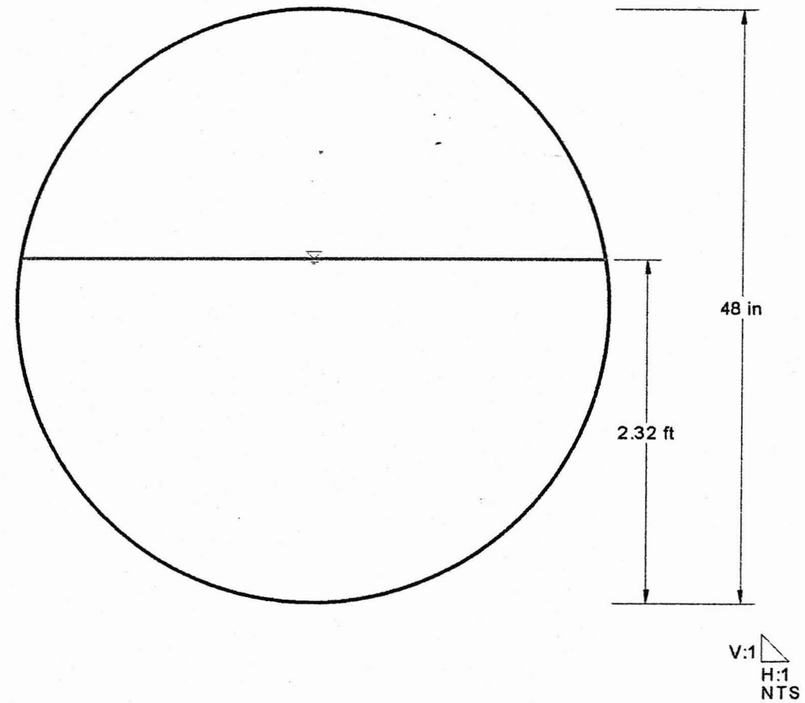

51st Avenue Storm Drain (Dobbins to Baseline)
Worksheet for Circular Channel

Project Description	
Worksheet	Alt 6A - 51st Avenue Storm Drain (Dobbins to
Flow Element	Circular Channel
Method	Manning's Formula
Solve For	Channel Depth

Input Data		
Mannings Coeffic	0.013	
Slope	005300	ft/ft
Diameter	144	in
Discharge	2,021.00	cfs

Results		
Depth	10.23	ft
Flow Area	102.7	ft²
Wetted Perime	28.23	ft
Top Width	8.52	ft
Critical Depth	10.22	ft
Percent Full	85.2	%
Critical Slope	0.005302	ft/ft
Velocity	19.68	ft/s
Velocity Head	6.02	ft
Specific Energy	16.25	ft
Froude Numbe	1.00	
Maximum Disc	2,105.80	cfs
Discharge Full	1,957.60	cfs
Slope Full	0.005649	ft/ft
Flow Type	Subcritical	

51st Avenue Storm Drain (Dobbins to Baseline)
Cross Section for Circular Channel

Project Description	
Worksheet	Alt 6A - 51st Avenue Storm Drain (Dobbins to
Flow Element	Circular Channel
Method	Manning's Formula
Solve For	Channel Depth

Section Data		
Mannings Coeffic	0.013	
Slope	005300	ft/ft
Depth	10.23	ft
Diameter	144	in
Discharge	2,021.00	cfs

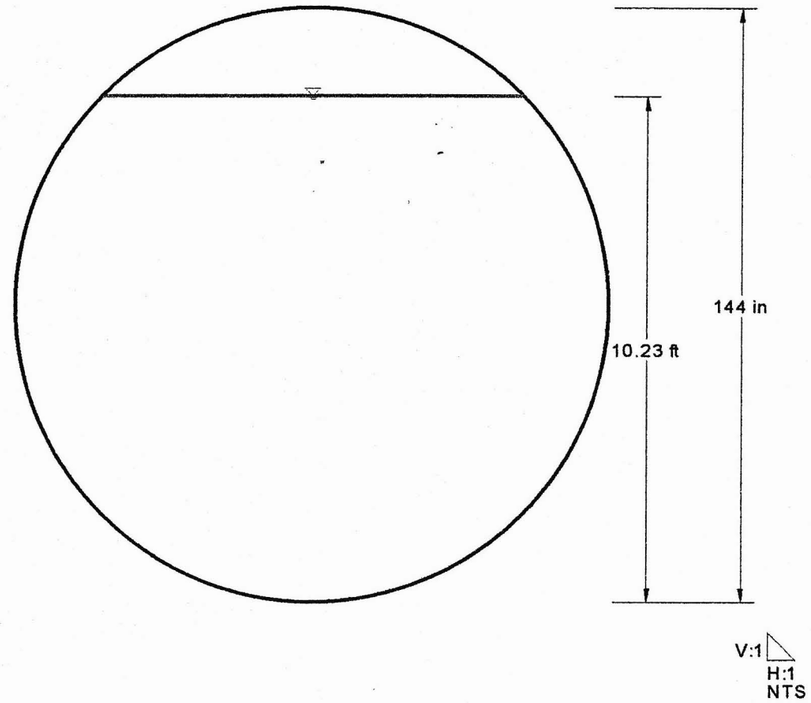

Dobbins Road Storm Drain (47th to 51st)
Worksheet for Circular Channel

Project Description	
Worksheet	Alt 6A - Dobbins Road Pipe (47th t
Flow Element	Circular Channel
Method	Manning's Formula
Solve For	Channel Depth

Input Data		
Mannings Coeffic	0.013	
Slope	004200	ft/ft
Diameter	132	in
Discharge	,362.00	cfs

Results		
Depth	8.88	ft
Flow Area	82.2	ft²
Wetted Perime	24.55	ft
Top Width	8.68	ft
Critical Depth	8.67	ft
Percent Full	80.7	%
Critical Slope	0.004402	ft/ft
Velocity	16.58	ft/s
Velocity Head	4.27	ft
Specific Energ	13.15	ft
Froude Numbe	0.95	
Maximum Disc	1,486.39	cfs
Discharge Full	1,381.78	cfs
Slope Full	0.004081	ft/ft
Flow Type	Subcritical	

Dobbins Road Storm Drain (47th to 51st)
Cross Section for Circular Channel

Project Description	
Worksheet	Alt 6A - Dobbins Road Pipe (47th t
Flow Element	Circular Channel
Method	Manning's Formula
Solve For	Channel Depth

Section Data		
Mannings Coeffic	0.013	
Slope	004200	ft/ft
Depth	8.88	ft
Diameter	132	in
Discharge	,362.00	cfs

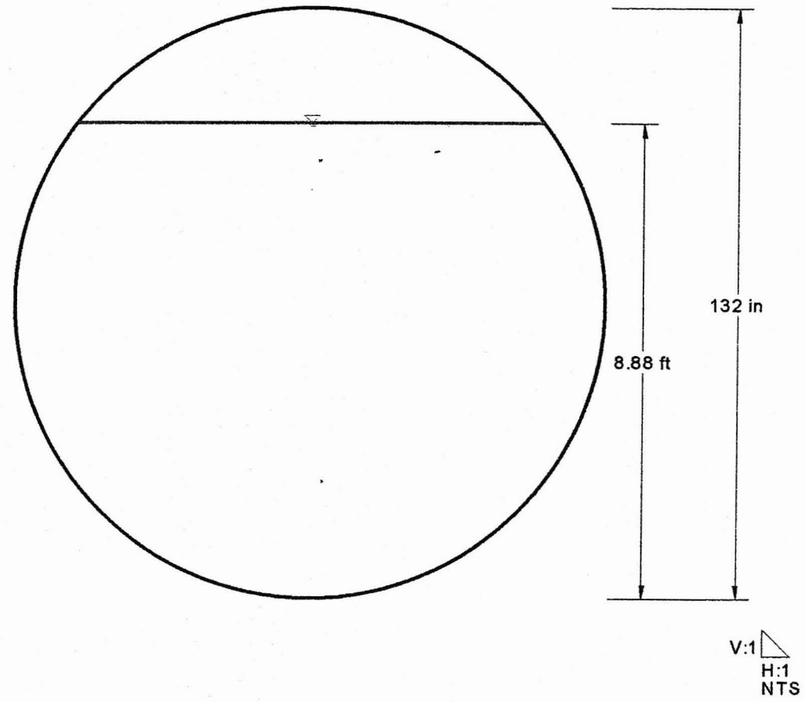

47th Avenue Storm Drain (Olney to Dobbins)
Worksheet for Circular Channel

Project Description	
Worksheet	Alt 6A 47th Avneue Storm Drain (Olney Ave.
Flow Element	Circular Channel
Method	Manning's Formula
Solve For	Channel Depth

Input Data		
Mannings Coeffic	0.013	
Slope	003000	ft/ft
Diameter	36	in
Discharge	20.00	cfs

Results		
Depth	1.58	ft
Flow Area	3.8	ft²
Wetted Perime	4.88	ft
Top Width	3.00	ft
Critical Depth	1.44	ft
Percent Full	52.8	%
Critical Slope	0.004184	ft/ft
Velocity	5.28	ft/s
Velocity Head	0.43	ft
Specific Energ:	2.02	ft
Froude Numbe	0.83	
Maximum Disc	39.30	cfs
Discharge Full	36.53	cfs
Slope Full	0.000899	ft/ft
Flow Type	Subcritical	

47th Avenue Storm Drain (Olney to Dobbins)
Cross Section for Circular Channel

Project Description	
Worksheet	Alt 6A 47th Avneue Storm Drain (Olney Ave.
Flow Element	Circular Channel
Method	Manning's Formula
Solve For	Channel Depth

Section Data		
Mannings Coeffic	0.013	
Slope	003000	ft/ft
Depth	1.58	ft
Diameter	36	in
Discharge	20.00	cfs

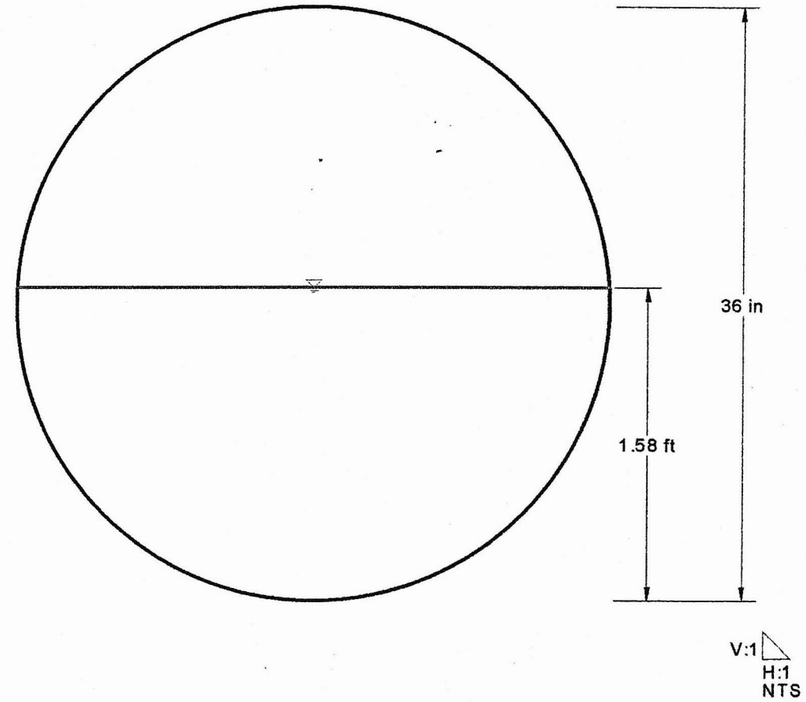

Western Canal Channel (West)
Worksheet for Trapezoidal Channel

Project Description	
Worksheet	Alt 6A Western Canal Channe
Flow Element	Trapezoidal Channel
Method	Manning's Formula
Solve For	Channel Depth

Input Data		
Mannings Coeffic	0.035	
Slope	002000	ft/ft
Left Side Slope	5.00	H : V
Right Side Slope	5.00	H : V
Bottom Width	10.00	ft
Discharge	400.00	cfs

Results		
Depth	3.98	ft
Flow Area	119.1	ft²
Wetted Perime	50.60	ft
Top Width	49.82	ft
Critical Depth	2.49	ft
Critical Slope	0.015552	ft/ft
Velocity	3.36	ft/s
Velocity Head	0.18	ft
Specific Energ	4.16	ft
Froude Numbe	0.38	
Flow Type	Subcritical	

Western Canal Channel (East) West
Cross Section for Trapezoidal Channel

Project Description	
Worksheet	Alt 6A Western Canal Channe
Flow Element	Trapezoidal Channel
Method	Manning's Formula
Solve For	Channel Depth

Section Data		
Mannings Coeffic	0.035	
Slope	002000	ft/ft
Depth	3.98	ft
Left Side Slope	5.00	H : V
Right Side Slope	5.00	H : V
Bottom Width	10.00	ft
Discharge	400.00	cfs

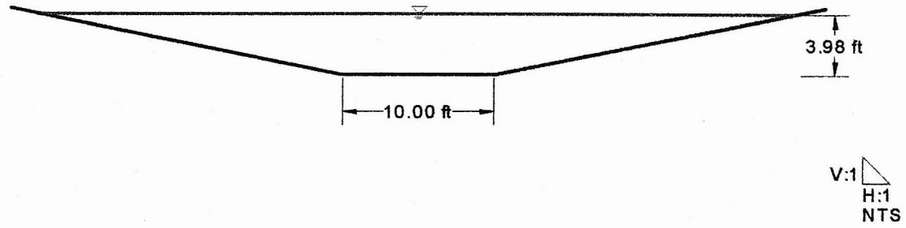

Western Canal Channel East
Worksheet for Trapezoidal Channel

Project Description	
Worksheet	Alt 6A - Western Canal Channe
Flow Element	Trapezoidal Channel
Method	Manning's Formula
Solve For	Channel Depth

Input Data		
Mannings Coeffic	0.035	
Slope	002000	ft/ft
Left Side Slope	5.00	H : V
Right Side Slope	5.00	H : V
Bottom Width	10.00	ft
Discharge	400.00	cfs

Results		
Depth	3.98	ft
Flow Area	119.1	ft²
Wetted Perim	50.60	ft
Top Width	49.82	ft
Critical Depth	2.49	ft
Critical Slope	0.015552	ft/ft
Velocity	3.36	ft/s
Velocity Head	0.18	ft
Specific Energ	4.16	ft
Froude Numb	0.38	
Flow Type	Subcritical	

Western Canal Channel (East)
Cross Section for Trapezoidal Channel

Project Description	
Worksheet	Alt 6A - Western Canal Channe
Flow Element	Trapezoidal Channel
Method	Manning's Formula
Solve For	Channel Depth

Section Data		
Mannings Coeffic	0.035	
Slope	002000	ft/ft
Depth	3.98	ft
Left Side Slope	5.00	H : V
Right Side Slope	5.00	H : V
Bottom Width	10.00	ft
Discharge	400.00	cfs

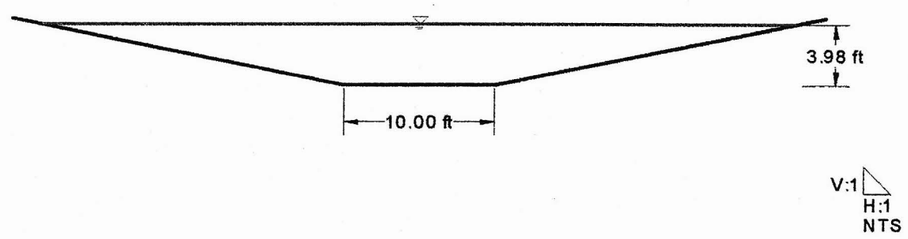

Dobbins Road Storm Drain (43rd to 47th)
Worksheet for Circular Channel

Project Description	
Worksheet	Alt 6A - Dobbins Road Pipe (43rd t
Flow Element	Circular Channel
Method	Manning's Formula
Solve For	Channel Depth

Input Data		
Mannings Coeffic	0.013	
Slope	004200	ft/ft
Diameter	132	in
Discharge	,376.00	cfs

Results		
Depth	8.97	ft
Flow Area	83.0	ft²
Wetted Perime	24.80	ft
Top Width	8.53	ft
Critical Depth	8.71	ft
Percent Full	81.6	%
Critical Slope	0.004450	ft/ft
Velocity	16.58	ft/s
Velocity Head	4.27	ft
Specific Energ	13.24	ft
Froude Numbe	0.94	
Maximum Disc	1,486.39	cfs
Discharge Full	1,381.78	cfs
Slope Full	0.004165	ft/ft
Flow Type	Subcritical	

© Haestad Methods, Inc.
Project Engineering Consultants Ltd
37 Brookside Road Waterbury, CT 06708 USA (203) 755-1666

Dobbins Road Storm Drain (43rd to 47th)
Cross Section for Circular Channel

Project Description	
Worksheet	Alt 6A - Dobbins Road Pipe (43rd t
Flow Element	Circular Channel
Method	Manning's Formula
Solve For	Channel Depth

Section Data		
Mannings Coeffic	0.013	
Slope	004200	ft/ft
Depth	8.97	ft
Diameter	132	in
Discharge	,376.00	cfs

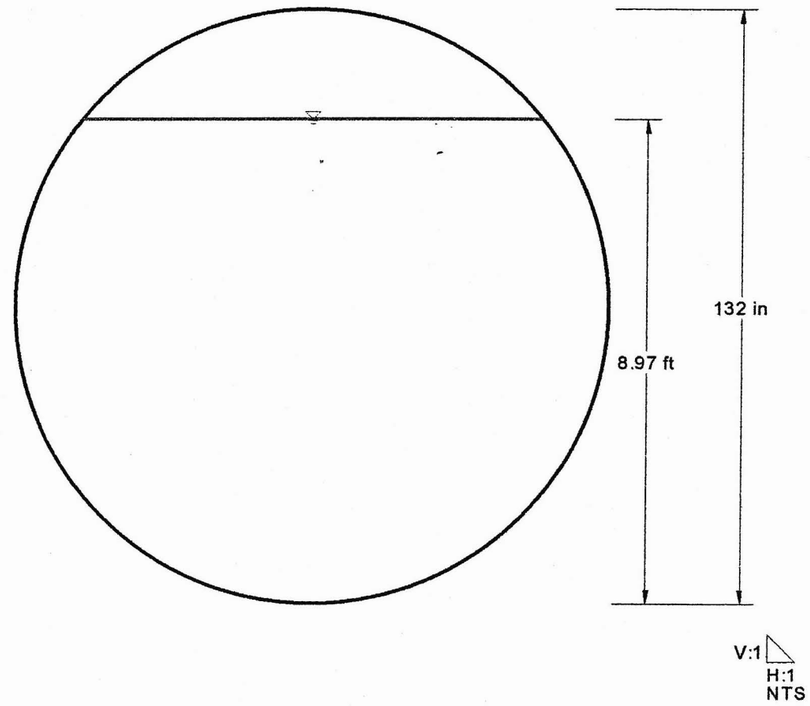

© Haestad Methods, Inc.
Project Engineering Consultants Ltd
37 Brookside Road Waterbury, CT 06708 USA (203) 755-1666

```
1*****************************************
 *                                       *
 *   FLOOD HYDROGRAPH PACKAGE  (HEC-1)   *
 *             JUN  1998                 *
 *           VERSION 4.1                 *
 *                                       *
 *  RUN DATE   27JUN01  TIME  11:52:29   *
 *                                       *
 *****************************************
```

```
*************************************
*                                   *
*   U.S. ARMY CORPS OF ENGINEERS    *
*   HYDROLOGIC ENGINEERING CENTER   *
*        609 SECOND STREET          *
*      DAVIS, CALIFORNIA 95616      *
*          (916) 756-1104           *
*                                   *
*************************************
```

```
X     X  XXXXXXX   XXXXX          X
X     X  X        X     X        XX
X     X  X        X              X
XXXXXXX  XXXX     X        XXXXX  X
X     X  X        X              X
X     X  X        X     X        X
X     X  XXXXXXX   XXXXX         XXX
```

THIS PROGRAM REPLACES ALL PREVIOUS VERSIONS OF HEC-1 KNOWN AS HEC1 (JAN 73), HEC1GS, HEC1DB, AND HEC1KW.

THE DEFINITIONS OF VARIABLES -RTIMP- AND -RTIOR- HAVE CHANGED FROM THOSE USED WITH THE 1973-STYLE INPUT STRUCTURE.
THE DEFINITION OF -AMSKK- ON RM-CARD WAS CHANGED WITH REVISIONS DATED 28 SEP 81. THIS IS THE FORTRAN77 VERSION
NEW OPTIONS: DAMBREAK OUTFLOW SUBMERGENCE , SINGLE EVENT DAMAGE CALCULATION, DSS:WRITE STAGE FREQUENCY,
DSS:READ TIME SERIES AT DESIRED CALCULATION INTERVAL LOSS RATE:GREEN AND AMPT INFILTRATION
KINEMATIC WAVE: NEW FINITE DIFFERENCE ALGORITHM

1 HEC-1 INPUT PAGE 1

```
LINE          ID.....1.....2.....3.....4.....5.....6.....7.....8.....9.....10
   1          ID   FILENAME LAVALT6A.DAT
   2          ID   LAVEEN ADMP ALTERNATIVE MODEL FOR ALTERNATIVE 6
   3          ID   MAY 2001
   4          ID   MODIFIED BY PROJECT ENGINEERING CONSULTANTS, LTD.
   5          ID
   6          ID
   7          ID
   8          ID   LAVEEN ADMS (FINAL HEC-1) 100-YR 24-HR STORM          CBA FILE # 40916-02-30
   9          ID   HIDDEN VALLEY WATERSHED/CHAMPION DRAIN WATERSHED
  10          ID   INPUT FILE NAME  LAVFUT1A                    DATE: SEPT. 27,2000
  11          ID   24-HOUR SCS TYPE II
  12          ID   80% RETENTION VOLUME OF FUTURE RETENTION
  13          ID
  14          ID   RELAXED RETENTION 1/2 MILE OF MARICOPA DRAIN
  15          ID   MINUS FIRST FLUSH OF 5YR 24HR VOLUME
  16          ID
  17          ID   MULTIPLAN FOR ROUTING WITHIN THE CHAMPION DRAIN
  18          ID     PLAN 2: CHANNEL, S=.0020 ft/ft, n=.031, BW=14', SS=6:1, D=10', TW=124'
  19          ID
  20          ID   DDM MCUHP1 LAVEEN REVISED HYDROLOGY - FUTURE LANDUSE CONDITIONS
              *DIAGRAM
  21          IT       5                   300
  22          IO       3       0
              * DDM   ***** Updated *****
  23          KK   VR47C
  24          KM   SUB-BASIN VR47C
  25          KM   24-HOUR SCS TYPE II RAINFALL WAS USED TO FIND TC & R FOR THIS BASIN
  26          KM   THIS BASIN USED RAINFALL REDUCTION FACTOR OF  .934
  27          KM     L = 1.65  Kb = .042  Adj. Slope =    7.0
  28          BA    .869
  29          IN       15
  30          KM   RAINFALL DEPTH OF 4.20 WAS SPACIALLY REDUCED AS SHOWN BY THE PB RECORD
  31          PB   3.923
  32          KM   THE FOLLOWING PC RECORD USED A 24-HR SCS TYPE II STORM
  33          PC    .000    .002    .005    .008    .011    .014    .017    .020    .023    .026
  34          PC    .029    .032    .035    .038    .041    .044    .048    .052    .056    .060
  35          PC    .064    .068    .072    .076    .080    .085    .090    .095    .100    .105
  36          PC    .110    .115    .120    .126    .133    .140    .147    .155    .163    .172
  37          PC    .181    .191    .203    .218    .236    .257    .283    .387    .663    .707
  38          PC    .735    .758    .776    .791    .804    .815    .825    .834    .842    .849
  39          PC    .856    .863    .869    .875    .881    .887    .893    .898    .903    .908
  40          PC    .913    .918    .922    .926    .930    .934    .938    .942    .946    .950
  41          PC    .953    .956    .959    .962    .965    .968    .971    .974    .977    .980
  42          PC    .983    .986    .989    .992    .995    .998   1.000
  43          LG    .260    .250   5.700    .250  27.000
  44          UC   1.500    .938
  45          UA       0       5      16      30      65      77      84      90      94      97
  46          UA     100
              *
              * DDM   ***** Preserved *****
```

1 HEC-1 INPUT PAGE 2

```
LINE          ID.....1.....2.....3.....4.....5.....6.....7.....8.....9.....10
  47          KK   VR47R
  48          KM   DIVERT RETENTION VOLUME
```



```
  49          KM   RELAXED RETENTION VOLUME FROM 72.8 AC-FT
  50          DT  RET47C    67.7
  51          DI       0    1000   10000
  52          DQ       0    1000   10000
              *
              * DDM   ***** Preserved *****
  53          KK  RBR511
  54          KM   ROUTE FLOW FROM COMPUTATION POINT CVR47C TO COMPUTATION POINT CB51C
  55          KM   MARICOPA DRAIN - 47TH AVE. TO 51ST AVE.
  56          RS       2     ELEV      -1
  57          RC    .030    .030    .030    3200    .0011
  58          RX       0      10      20      45     115     140     150     160
  59          RY  1008.2  1008.1    1008    1003    1003    1008  1008.1  1008.2
              *
              * DDM   ***** Updated *****
  60          KK  AVR51C
  61          KM   SUB-BASIN AVR51C
  62          KM   24-HOUR SCS TYPE II RAINFALL WAS USED TO FIND TC & R FOR THIS BASIN
  63          KM   THIS BASIN USED RAINFALL REDUCTION FACTOR OF  .934
  64          KM     L =  .86  Kb = .049  Adj. Slope =   10.0
  65          BA    .285
  66          LG    .250    .190   6.600    .170  30.000
  67          UC    .829    .545
  68          UA       0       5      16      30      65      77      84      90      94      97
  69          UA     100
              *
              * DDM   ***** Preserved *****
  70          KK  AVR51R
  71          KM   DIVERT RETENTION VOLUME
  72          DT  RET51C    21.6
  73          DI       0    1000   10000
  74          DQ       0    1000   10000
              *
              * DDM   ***** Preserved *****
  75          KK  RBR512
  76          KM   ROUTE FLOW FROM SUB-BASIN AVR51C TO COMPUTATION POINT CB51C
  77          KM   ROUTING REVISED TO REFLECT AN URBANIZED CONDITION
  78          RS       4     ELEV      -1
  79          RC   0.035   0.035   0.035    3600   0.001  1010.5
  80          RX       0      20      40      46      56      62      82     102
  81          RY  1010.5  1009.7  1009.0    1006    1006    1009  1009.7  1010.5
              *
              * DDM   ***** Updated *****
```

1 HEC-1 INPUT PAGE 3

```
LINE          ID.....1.....2.....3.....4.....5.....6.....7.....8.....9.....10
  82          KK   BR51C
  83          KM   SUB-BASIN BR51C
  84          KM   24-HOUR SCS TYPE II RAINFALL WAS USED TO FIND TC & R FOR THIS BASIN
  85          KM   THIS BASIN USED RAINFALL REDUCTION FACTOR OF  .934
  86          KM     L = 1.21  Kb = .043  Adj. Slope =    6.0
  87          BA    .699
  88          LG    .250    .250   4.900    .350  31.000
  89          UC   1.325    .722
  90          UA       0       5      16      30      65      77      84      90      94      97
  91          UA     100
              *
              * DDM   ***** Preserved *****
  92          KK   BR51R
  93          KM   DIVERT RETENTION VOLUME
  94          KM   RELAXED RETENTION VOLUME FROM 53.6 AC-FT
  95          DT  RET159    50.5
  96          DI       0    1000   10000
  97          DQ       0    1000   10000
              *
              * DDM   ***** Preserved *****
  98          KK   CB51C
  99          KM    COMBINE ROUTED FLOW FROM COMPUTATION POINT CVR47C AND SUB-BASIN AVR51C
 100          KM    WITH RUNOFF FROM SUB-BASIN BR51C
 101          HC       3
              *
              *  ********************************************************************
              *  ********************MODIFICATION MADE FOR ALT 6A********************
              *  ********************************************************************
              *
              *
              *
              *
              *  ********************************************************************
              *
              *  FOR THE LAVEEN ADMP MODIFICATIONS WERE MADE TO CONVEY FLOWS TO THIS POINT
              *  THIS MODELING USES DETENTION BASINS AND STORM DRAINS TO ACOMPLISH THIS
              *
              *
              *
              *
              * DDM   ***** Updated *****
```

```
102          KK   DR43C
103          KM   SUB-BASIN DR43C
104          KM   24-HOUR SCS TYPE II RAINFALL WAS USED TO FIND TC & R FOR THIS BASIN
105          KM   THIS BASIN USED RAINFALL REDUCTION FACTOR OF  .934
106          KM     L = 1.49  Kb = .039  Adj. Slope =   69.0
107          BA    .922
108          LG    .250    .250   5.100    .300  38.000
109          UC    .450    .220
110          UA       0       5      16      30      65      77      84      90      94      97
111          UA     100
             *
             * DDM   ***** Preserved *****
1                                        HEC-1 INPUT                                        PAGE  4

        LINE         ID.....1.....2.....3.....4.....5.....6.....7.....8.....9.....10

112          KK   DR43R
113          KM   DIVERT RETENTION VOLUME
114          DT   RET43C    27.9
115          DI       0    1000   10000
116          DQ       0    1000   10000
             *
             *
             *
             *
             * ****************DOBBINS ROAD STORM DRAIN (43RD TO 47TH)**********************
             * ****************ALT6 WILL PICK UP ALL FLOWS FROM DR43C**********************
             *
             *
             *
             *
             *
             *
117          KK   ROA51A
118          KM   **************DOBBINS ROAD STORM DRAIN (43RD TO 47TH)**********************
119          KM   ROUTE FLOW FROM DR43C WEST (1ST REACH) ALONG DOBBINS TO 47TH AVENUE
120          RK    2790   .0042    .013            CIRC      16
             * RS     2    ELEV      -1
             * RC  .035    .035    .035    2790   .0042
             * RX     0      40      60      74      99     113     133     153
             * RY  1025    1024    1023    1016    1016    1023    1024    1025
             *
             * DDM   ***** Updated *****
             *
             *
             *  **********THIS BASIN SPLIT OFF FROM OA51B TO ESTIMATE BASIN SIZE***********
             *
             *
121          KK   ER47B
122          KM   SUB-BASIN ER47B
123          KM   THIS SUB-BASIN SPLIT FROM OA51B TO ALLOW FOR DETENTION TO BE USED BELOW
124          KM   THE WESTERN CANAL - ALT6A
125          KM   24-HOUR SCS TYPE II RAINFALL WAS USED TO FIND TC & R FOR THIS BASIN
126          KM   THIS BASIN USED RAINFALL REDUCTION FACTOR OF  .934
127          KM     L = 1.26  Kb = .036  Adj. Slope =  254.0
128          BA    0.34
129          LG    .270    .270   6.000    .200  30.000
130          UC    .233    .074
131          UA       0       5      16      30      65      77      84      90      94      97
132          UA     100
             *
             *
             *
             *
             *
             *  **************PROPOSED BASIN NEAR 47TH AVENUE AND OLNEY AVENUE***************
             *
             *
1                                        HEC-1 INPUT                                        PAGE  5

        LINE         ID.....1.....2.....3.....4.....5.....6.....7.....8.....9.....10

133          KK  ERBASN
134          KM   **************PROPOSED BASIN NEAR 47TH AVENUE AND OLNEY AVENUE**************
135          KM   DETENTION BASIN AT THE ELLIOT AND 47TH AVE INTERSECTION. THE WESTERN CANAL
136          KM   IS USED AS A COLLECTOR FACILITY AND OUTLETS TO THIS DETENTION BASIN. THE
137          KM   BASIN HAS 10 AC TOP, 3.8 AC BOTTOM AND IS 6 FT DEEP WITH 5:1 SIDE SLOPES
138          KO       1
139          RS       1    ELEV       0
140          SA     3.8     4.8     5.9     6.9     7.9     9.0      10
141          SQ       0      20      20      20      20      20      20
142          SE       0       1       2       3       4       5       6
             *
             *
             *
             *
             * ***********OUTFLOW FROM BASIN IN 47TH AVENUE STORM DRAIN**********************
             *
             *
             *
```



```
143          KK  RER47B
144          KM   *************47TH AVENUE STORM DRAIN (OLNEY TO ELLIOT)************************
145          KM   ROUTE THE OUTFLOW FROM THE ELLIOT ROAD BASIN FROM ELLIOT ROAD TO DOBBINS ROAD
146          RK    4029   .0034    .013            CIRC       2
             *
147          KK  CER47B
148          KM    COMBINE FLOWS FROM 47TH AND ELLIOT BASIN WITH FLOWS FROM CR43C
149          HC       2
             *
             *
             *
             *
             *
             * ***************DOBBINS ROAD STORM DRAIN 47TH TO 51ST AVENUES******************
             *
             *
             * DDM   ***** Preserved *****
150          KK  ROA51B
151          KM   **********DOBBINS ROAD STORM DRAIN 47TH TO 51ST AVENUES**********************
152          KM   ROUTE FLOWS WEST ALONG DOBBINS TO 51ST AVE
153          KM   CROSS-SECTION REVISED TO REFLECT TO USE STORM DRAIN
154          RK    2640  0.0033    .013            CIRC       16
             *
             *  RS     2    ELEV      -1
             *  RC  .035    .035    .035    3600   .0017
             *  RX     0      40      60      74      99     113     133     153
             *  RY  1013    1012    1011    1004    1004    1011    1012    1013
             *
             * DDM   ***** Updated *****
1                                        HEC-1 INPUT                                        PAGE  6

        LINE         ID.....1.....2.....3.....4.....5.....6.....7.....8.....9.....10

155          KK   OA51B
156          KM   SUB-BASIN OA51B
157          KM   24-HOUR SCS TYPE II RAINFALL WAS USED TO FIND TC & R FOR THIS BASIN
158          KM   THIS BASIN USED RAINFALL REDUCTION FACTOR OF  .934
159          KM     L = 1.26  Kb = .036  Adj. Slope =  254.0
160          BA    1.03
161          LG    .270    .270   6.000    .200  30.000
162          UC    .233    .074
163          UA       0       5      16      30      65      77      84      90      94      97
164          UA     100
             *
             * DDM   ***** Preserved *****
165          KK   OA51R
166          KM   DIVERT RETENTION VOLUME
167          DT   RET51    80.9
168          DI       0    1000   10000
169          DQ       0    1000   10000
             *
             * DDM   ***** Preserved *****
170          KK   CDR51
171          KM   COMBINE ROUTED SPLIT FLOW FROM SUB-BASIN DR43C TO RUNOFF FROM SUB-BASIN
172          KM   OA51B - THIS COMBINATION NOW AT DOBBINS ROAD AND 51ST AVE
173          HC       2
             *
             *
             *
             *  *************51ST AVENUE STORM DRAIN (DOBBINS ROAD TO BASELINE)*************
             *
             *
             *
174          KK   RDR51
175          KM   **********51ST AVENUE STORM DRAIN (DOBBINS TO BASELINE)**********************
176          KM   ROUTE FLOWS NORTH ALONG 51ST AVENEUE  BASELINE AVENUE
177          KM   CROSS-SECTION REVISED TO REFLECT TO USE STORM DRAIN
178          RK    5280 0.0053    .013            CIRC       16
             *
             *
             *
             * *************PROPOSED BASIN AT BASELINE ROAD AND 51ST AVNEUE*****************
             *
             *
             *
179          KK  BRBASN
180          KM   *************PROPOSED BASIN AT BASELINE ROAD AND 51ST AVNEUE*****************
181          KM   DETENTION BASIN AT THE BASELINE AND 51ST AVE INTERSECTION.
182          KM
183          KM   BASIN HAS 25 AC TOP, 3.26 AC BOTTOM AND IS 97 FT DEEP WITH 5:1 SIDE SLOPES
184          KO       1
185          RS       1    ELEV       0
1                                        HEC-1 INPUT                                        PAGE  7

        LINE         ID.....1.....2.....3.....4.....5.....6.....7.....8.....9.....10

186          SA    3.26     5.7     8.1    10.5    12.9    15.3    17.7    20.2    22.6      25
```

```
187          SQ       0      50      50      50      50      50      50      50      50      50
188          SE       0       1       2       3       4       5       6       7       8       9
             *
             *
             *
             *  *********BASELINE ROAD STORM DRAIN (BASIN TO LAVEEN CONVEYANCE CHANNEL)******
             *
             *
             *
             *

189          KK   DBR51
190          KM   *********BASLINE ROAD STORM DRAIN (BASIN TO LCC)
191          KM   ROUTE FLOWS WEST ALONG BASELINE TO THE LAVEEN CONVEYANCE CHANNEL
192          KM   CROSS-SECTION REVISED TO REFLECT TO USE STORM DRAIN
193          RK    2640   0.003    .013            CIRC       4
             *
             *

194          KK   CB51D
195          KM    COMBINE ROUTED FLOW FROM COMPUTATION POINT CB51C AND FLOWS FROM 51ST
196          KM    AVENUE STORM DRAIN PROPOSED BY THE LAVEEN ADMP - ALT6A
197          HC       2
             *
             *
             * DDM   ***** Preserved *****

198          KK  RB1591
199          KM    ROUTE FLOW FROM COMPUTATION POINT CB51C TO COMPUTATION POINT CB159C
200          KM    MARICOPA DRAIN FROM 51ST AVE TO 59TH AVE.
201          RS       3    ELEV      -1
202          RC    .030    .030    .030    5200   .0011
203          RX       0      10      20      45     125     150     160     170
204          RY  1000.2  1000.1    1000     995     995    1000  1000.1  1000.2
             *
             * DDM   ***** Updated *****

205          KK  AVR55C
206          KM   SUB-BASIN AVR55C
207          KM   24-HOUR SCS TYPE II RAINFALL WAS USED TO FIND TC & R FOR THIS BASIN
208          KM   THIS BASIN USED RAINFALL REDUCTION FACTOR OF  .934
209          KM     L =  .93  Kb = .051  Adj. Slope =    5.0
210          BA    .241
211          LG    .250    .150   8.000    .100  29.000
212          UC   1.212    .973
213          UA       0       5      16      30      65      77      84      90      94      97
214          UA     100
             *
             * DDM   ***** Preserved *****
```

1 HEC-1 INPUT PAGE 8

```
LINE         ID.......1.......2.......3.......4.......5.......6.......7.......8.......9......10

215          KK  AVR55R
216          KM   DIVERT RETENTION VOLUME
217          DT  RET55C    25.6
218          DI       0    1000   10000
219          DQ       0    1000   10000
             *
             * DDM   ***** Preserved *****

220          KK  RB1592
221          KM    ROUTE FLOW FROM SUBASIN AVR55C TO COMPUTATION POINT CB159C
222          KM   ROUTING REVISED TO REFLECT URBANIZED CONDITIONS
223          RS       3    ELEV      -1
224          RC   0.035   0.035   0.035    3600   0.001
225          RX       0      20      40      46      56      62      82     102
226          RY    1004    1003    1002     999     999    1002    1003    1004
             *
             * DDM   ***** Updated *****

227          KK  BR159C
228          KM   SUB-BASIN BR159C
229          KM   24-HOUR SCS TYPE II RAINFALL WAS USED TO FIND TC & R FOR THIS BASIN
230          KM   THIS BASIN USED RAINFALL REDUCTION FACTOR OF  .934
231          KM     L = 1.68  Kb = .054  Adj. Slope =    8.0
232          BA    .675
233          LG    .170    .250   4.800    .420  28.000
234          UC   1.500   1.100
235          UA       0       5      16      30      65      77      84      90      94      97
236          UA     100
             *
             * DDM   ***** Preserved *****

237          KK  BR159R
238          KM   DIVERT RETENTION VOLUME
239          KM   RELAXED RETENTION VOLUME FROM 43.2 AC-FT
240          DT  RET159    39.5
241          DI       0    1000   10000
242          DQ       0    1000   10000
             *
             * DDM   ***** Updated *****

243          KK   VR59C
244          KM   SUB-BASIN VR59C
```



```
245          KM   24-HOUR SCS TYPE II RAINFALL WAS USED TO FIND TC & R FOR THIS BASIN
246          KM   THIS BASIN USED RAINFALL REDUCTION FACTOR OF  .934
247          KM     L =  .75  Kb = .083  Adj. Slope =    4.0
248          BA    .233
249          LG    .130    .150   7.000    .180   9.000
250          UC   1.500   1.058
251          UA       0       5      16      30      65      77      84      90      94      97
252          UA     100
             *
             * DDM   ***** Preserved *****
```

1 HEC-1 INPUT PAGE 9

```
LINE         ID.......1.......2.......3.......4.......5.......6.......7.......8.......9......10

253          KK  RB1593
254          KM   ROUTE FLOW FROM SUB-BASIN VR59C TO COMPUTATION POINT CB159C
255          KM   ROUTING REVISED TO REFLECT URBANIZED CONDITIONS
256          RS       3    ELEV      -1
257          RC   0.035   0.035   0.035    3000  0.0015
258          RX       0      20      40      46      56      62      82     102
259          RY    1002  1001.3    1001     998     998    1001  1001.3    1002
             *
             * DDM   ***** Preserved *****

260          KK  CB159N
261          KM     COMBINE ROUTED FLOWS FROM COMPUTATION POINT CB51C AND SUB-BASINS AVR51C
262          KM     AND VR59C WITH RUNOFF FROM SUB-BASIN BR159C
263          KM     CP (NORTH FLOWS) AT 59TH AVE AND BASELINE RD.
264          HC       4
             *
             *
             *
             *   PORTION OF FILE MOVED TO FOREWARD FOR ALT6A MODIFICATIONS
             *
             *
             *
             *
             *
             * DDM   ***** Updated *****

265          KK   OA55C
266          KM   SUB-BASIN OA55C
267          KM   24-HOUR SCS TYPE II RAINFALL WAS USED TO FIND TC & R FOR THIS BASIN
268          KM   THIS BASIN USED RAINFALL REDUCTION FACTOR OF  .934
269          KM     L =  .96  Kb = .049  Adj. Slope =    3.0
270          BA    .246
271          LG    .290    .250   4.800    .360  19.000
272          UC   1.500   1.249
273          UA       0       5      16      30      65      77      84      90      94      97
274          UA     100
             *
             * DDM   ***** Preserved *****

275          KK   OA55R
276          KM   DIVERT RETENTION VOLUME
277          DT  RET55C     2.4
278          DI       0    1000   10000
279          DQ       0    1000   10000
             *
             *
             * DDM   ***** Preserved *****

280          KK   RD57C
281          KM   ROUTE FLOW FROM COMPUTATION POINT CPO55C TO COMPUTAION CDR57C
282          KM   CROSS-SECTION REVISED TO REFLECT URBANIZED CONDITIONS
283          RS       2    ELEV      -1
284          RC   0.035   0.035   0.035    2920   0.001
285          RX       0      40      60      72      97     109     129     149
```

1 HEC-1 INPUT PAGE 10

```
LINE         ID.......1.......2.......3.......4.......5.......6.......7.......8.......9......10

286          RY    1030    1029    1028    1022    1022    1028    1029    1030
             *
             *
             * DDM   ***** Updated *****

287          KK   DR57C
288          KM   SUB-BASIN DR57C
289          KM   24-HOUR SCS TYPE II RAINFALL WAS USED TO FIND TC & R FOR THIS BASIN
290          KM   THIS BASIN USED RAINFALL REDUCTION FACTOR OF  .934
291          KM     L =  .71  Kb = .054  Adj. Slope =    3.0
292          BA    .118
293          LG    .300    .250   4.800    .360  15.000
294          UC   1.500   1.492
295          UA       0       5      16      30      65      77      84      90      94      97
296          UA     100
             *
             * DDM   ***** Preserved *****

297          KK   DR57R
298          KM   DIVERT RETENTION VOLUME
299          DT  RET27     12.8
300          DI       0    1000   10000
301          DQ       0    1000   10000
```

```
                *
                * DDM   ***** Preserved *****

     302        KK  CDR57C
     303        KM   COMBINE ROUTED FLOW FROM COMPUTATION POINT CPO55C TO RUNOFF FROM SUB-BASIN
     304        KM   DR57C
     305        HC       2
                *
                * DDM   ***** Preserved *****

     306        KK   RD59C
     307        KM   ROUTE FLOW FROM COMPUTATION POINT CDR57C TO COMPUTATION POINT CDR59C
     308        KM   CROSS-SECTION REVISED TO REFLECT URBANIZED CONDITIONS
     309        RS       1    ELEV      -1
     310        RC   0.035   0.035   0.035    1200  0.0025
     311        RX       0      40      60      72      97     109     129     149
     312        RY    1026    1025    1024    1019    1019    1024    1025    1026
                *
                * DDM   ***** Updated *****

     313        KK   DR59C
     314        KM   SUB-BASIN DR59C
     315        KM   24-HOUR SCS TYPE II RAINFALL WAS USED TO FIND TC & R FOR THIS BASIN
     316        KM   THIS BASIN USED RAINFALL REDUCTION FACTOR OF  .934
     317        KM     L =  .69  Kb = .048  Adj. Slope =    7.0
     318        BA    .117
     319        LG    .230    .250   4.800    .370  37.000
     320        UC   1.554   1.524
     321        UA       0       5      16      30      65      77      84      90      94      97
     322        UA     100
                *
                * DDM   ***** Preserved *****

1                                        HEC-1 INPUT                                        PAGE 11

    LINE        ID.......1.......2.......3.......4.......5.......6.......7.......8.......9......10

     323        KK   DR59R
     324        KM   DIVERT RETENTION VOLUME
     325        DT  RET59C    10.4
     326        DI       0    1000   10000
     327        DQ       0    1000   10000
                *
                * DDM   ***** Preserved *****

     328        KK  CDR59C
     329        KM   COMBINE ROUTED FLOW FROM COMPUTATION POINT CDR57C TO RUNOFF FROM SUB-BASIN
     330        KM   DR59C
     331        HC       2
                *
                * DDM   ***** Preserved *****

     332        KK   RB259
     333        KM   ROUTE FLOW FROM COMPUTATION POINT CDR59C TO COMPUTATION POINT CB259C
     334        KM   CROSS-SECTION REVISED TO REFLECT URBANIZED CONDITIONS
     335        KM   REVISED SLOPW FROM .0046 TO REFLECT A VELOCITY OF LESS THAN 4 FT/SEC
     336        KM
     337        RS       2    ELEV      -1
     338        RC   0.035    0.02   0.035    5280  0.0015
     339        RX       0      40      60      72      97     109     129     149
     340        RY    1024    1023    1022    1016    1016    1022    1023    1024
                *
                * ****************************************************************
                * MODIFICATION FOR ALT 6A
                *
                * DDM   ***** Updated *****

     341        KK   SM51C
     342        KM   SUB-BASIN SM51C
     343        KM   24-HOUR SCS TYPE II RAINFALL WAS USED TO FIND TC & R FOR THIS BASIN
     344        KM   THIS BASIN USED RAINFALL REDUCTION FACTOR OF  .934
     345        KM     L = 1.29  Kb = .045  Adj. Slope =   12.0
     346        BA    .511
     347        LG    .290    .250   5.200    .290  17.000
     348        UC   1.054    .705
     349        UA       0       5      16      30      65      77      84      90      94      97
     350        UA     100
                *
                * DDM   ***** Preserved *****

     351        KK   SM51R
     352        KM   DIVERT RETENTION VOLUME
     353        DT  RET51C    23.0
     354        DI       0    1000   10000
     355        DQ       0    1000   10000
                *
                *
                * DDM   ***** Preserved *****
1                                        HEC-1 INPUT                                        PAGE 12

    LINE        ID.......1.......2.......3.......4.......5.......6.......7.......8.......9......10

     356        KK  RB2591
     357        KM   ROUTE FLOW FROM COMPUTATION POINT CS51C TO COMPUTATION POINT CB259C
     358        KM   FIRST REACH
```



```
     359        KM   CROSS-SECTION REVISED TO REFLECT DEVELOPED CONDITIONS
     360        RS       3    ELEV      -1
     361        RC   0.035   0.035   0.035    4200  0.0036
     362        RX       0      40      60      65      75      80     100     140
     363        RY    1030    1029    1028    1025    1025    1028    1029    1030
                *
                * RC  0.07    0.07    0.07    4200  0.0036
                * RX     0     612    1085    1155    1595    1670    1765    2130
                * RY1029.6    1029    1028  1027.5  1027.5    1028    1028  1029.6
                *
                * DDM   ***** Preserved *****

     364        KK  RB2592
     365        KM   ROUTE FLOW FROM COMPUTATION POINT CS51C TO COMPUTATION POINT CB259C
     366        KM   2ND REACH
     367        KM   CROSS-SECTION REVISED TO REFLECT DEVELOPED CONDITIONS
     368        RS       3    ELEV      -1
     369        RC   0.035   0.035   0.035    3000  0.0063
     370        RX       0      40      60      65      75      80     100     140
     371        RY    1006    1005    1004    1001    1001    1004    1005    1006
                *
                * RC  0.07    0.07    0.07    3000  0.0063
                * RX     0      50     140     335    1120    1770    1825    1870
                * RY  1006    1004    1003    1002    1001    1001    1002  1002.5
                *
                * DDM   ***** Updated *****

     372        KK  BR259C
     373        KM   SUB-BASIN BR259C
     374        KM   24-HOUR SCS TYPE II RAINFALL WAS USED TO FIND TC & R FOR THIS BASIN
     375        KM   THIS BASIN USED RAINFALL REDUCTION FACTOR OF  .934
     376        KM     L = 1.90  Kb = .037  Adj. Slope =   19.0
     377        BA   1.012
     378        LG    .230    .250   4.800    .360  33.000
     379        UC    .954    .583
     380        UA       0       5      16      30      65      77      84      90      94      97
     381        UA     100
                *
                * DDM   ***** Preserved *****

     382        KK  BR259R
     383        KM   DIVERT RETENTION VOLUME
     384        KM   RELAXED RETENTION VOLUME FROM 68.3 AC-FT.
     385        DT  RET259    67.0
     386        DI       0    1000   10000
     387        DQ       0    1000   10000
                *
                * DDM   ***** Preserved *****
1                                        HEC-1 INPUT                                        PAGE 13

    LINE        ID.......1.......2.......3.......4.......5.......6.......7.......8.......9......10

     388        KK  CB259A
     389        KM   COMBINE ROUTED FLOW FROM COMPUTATION POINT CDR59C TO PREVIOUSLY
     390        KM   COMPUTED FLOW AT COMPUTATION POINT CB1592
     391        HC       2
                *
                *
                * DDM   ***** Preserved *****

     392        KK  CB259S
     393        KM   COMBINE FLOWS FROM THE SOUTH AT 59TH AVENUE
     394        HC       2
                *
                * DDM   ***** Preserved *****

     395        KK   CB259
     396        KM   COMBINE NORTH AND SOUTH FLOWS
     397        HC       2
                *
                * DDM   ***** Preserved *****

     398        KK  RBR163
     399        KM   ROUTE FLOW FROM COMPUTATION POINT CB1591 TO COMPUTATION POINT CB163C
     400        KM   MARICOPA DRAIN FROM 59TH AVE. TO 63RD AVE.
     401        KM   ADJUST THE SLOPE FROM .0011 TO REFLECT A VELOCITY OF LESS THAN 5 FT/SEC
     402        RS       2    ELEV      -1
     403        RC    .030    .030    .030    2640   .0009
     404        RX       0      10      20      45     135     160     170     180
     405        RY   997.8   997.7   997.6   992.6   992.6   997.6   997.7   997.8
                *
                * DDM   ***** Updated *****

     406        KK  BR263C
     407        KM   SUB-BASIN BR263C
     408        KM   24-HOUR SCS TYPE II RAINFALL WAS USED TO FIND TC & R FOR THIS BASIN
     409        KM   THIS BASIN USED RAINFALL REDUCTION FACTOR OF  .934
     410        KM     L = 1.45  Kb = .057  Adj. Slope =   19.0
     411        BA    .494
     412        LG    .110    .250   4.700    .480  38.000
     413        UC   1.104    .831
     414        UA       0       5      16      30      65      77      84      90      94      97
     415        UA     100
                *
                * DDM   ***** Preserved *****
```

```
 416          KK  BR263R
 417          KM   DIVERT RETENTION VOLUME
 418          KM   RELAXED RETENTION VOLUME FROM 32.0 AC-FT.
 419          DT  RET263    29.3
 420          DI       0    1000   10000
 421          DQ       0    1000   10000
              *
              * DDM   ***** Preserved *****
1                                      HEC-1 INPUT                                      PAGE 14

LINE          ID.......1.......2.......3.......4.......5.......6.......7.......8.......9......10

 422          KK     63S
 423          KM   COMBINE ROUTED FLOW FROM COMPUTATION POINT CB159C WITH RUNOFF FROM SUB-BASINS
 424          KM   BR163C AND BR263C AND ROUTED FLOW FROM COMPUTATION POINT  CB259C
 425          HC       2
              *
              * DDM   ***** Updated *****

 426          KK  BR163C
 427          KM   SUB-BASIN BR163C
 428          KM   24-HOUR SCS TYPE II RAINFALL WAS USED TO FIND TC & R FOR THIS BASIN
 429          KM   THIS BASIN USED RAINFALL REDUCTION FACTOR OF  .934
 430          KM     L =  .91  Kb = .040  Adj. Slope =    9.0
 431          BA    .255
 432          LG    .220    .250   5.400    .240  21.000
 433          UC    .808    .590
 434          UA       0       5      16      30      65      77      84      90      94      97
 435          UA     100
              *
              * DDM   ***** Preserved *****

 436          KK  BR163R
 437          KM   DIVERT RETENTION VOLUME
 438          DT  RET163     6.6
 439          DI       0    1000   10000
 440          DQ       0    1000   10000
              *
              * DDM   ***** Preserved *****

 441          KK   CB163
 442          KM   COMBINE FLOWS ON THE SOUTH SIDE OF BASELINE
 443          HC       2
              *
              * DDM   ***** Preserved *****

 444          KK   RCD1C
 445          KM   ROUTE FLOW FROM COMPUTATION POINT CB163C TO COMPUTATION POINT CPCD1C
 446          KM   MARICOPA DRAIN FROM 63RD AVE TO 67TH AVE.
 447          RS       2    ELEV      -1
 448          RC    .030    .030    .030    2640   .0011
 449          RX       0      10      20      45     135     160     170     180
 450          RY   996.2   996.1     996     991     991     996   996.1   996.2
              *
              * DDM   ***** Updated *****

 451          KK   BR67C
 452          KM   SUB-BASIN BR67C
 453          KM   24-HOUR SCS TYPE II RAINFALL WAS USED TO FIND TC & R FOR THIS BASIN
 454          KM   THIS BASIN USED RAINFALL REDUCTION FACTOR OF  .934
 455          KM     L =  .79  Kb = .054  Adj. Slope =    5.0
 456          BA    .127
 457          LG    .300    .150   7.000    .140  15.000
 458          UC   1.163   1.174
 459          UA       0       5      16      30      65      77      84      90      94      97
 460          UA     100
              *
              * DDM   ***** Preserved *****
1                                      HEC-1 INPUT                                      PAGE 15

LINE          ID.......1.......2.......3.......4.......5.......6.......7.......8.......9......10

 461          KK  RCD1C2
 462          KM    ROUTE FLOW FROM SUBASIN BR67C TO COMPUTATION POINT CPCD1C
 463          KM   CROSS-SECTION WAS REVISED TO REFLECT URBANIZED CONDITIONS
 464          RS       1    ELEV      -1
 465          RC   0.035   0.035   0.035    2100  0.0014
 466          RX       0      40      60      65      75      80     100     140
 467          RY     994     993     992     989     989     992     993     994
              *
              * DDM   ***** Updated *****

 468          KK    CD1C
 469          KM   SUB-BASIN CD1C
 470          KM   24-HOUR SCS TYPE II RAINFALL WAS USED TO FIND TC & R FOR THIS BASIN
 471          KM   THIS BASIN USED RAINFALL REDUCTION FACTOR OF  .934
 472          KM     L =  .90  Kb = .049  Adj. Slope =   27.0
 473          BA    .464
 474          LG    .190    .250   4.700    .410  30.000
 475          UC    .583    .290
 476          UA       0       5      16      30      65      77      84      90      94      97
 477          UA     100
              *
```



```
              * DDM   ***** Preserved *****

 478          KK    CD1R
 479          KM   DIVERT RETENTION VOLUME
 480          DT   RET1C    32.0
 481          DI       0    1000   10000
 482          DQ       0    1000   10000
              *
              * DDM   ***** Preserved *****

 483          KK  CPCD1C
 484          KM    COMBINE ROUTED FLOWS FROM COMPUTATION POINT CB163C AND SUB-BASIN BR67C
 485          KM    WITH RUNOFF FROM SUB-BASIN CD1C
 486          HC       3
              *
              * DDM   ***** Preserved *****

 487          KK  RCD2C1
 488          KM    ROUTE FLOW FROM COMPUTATION POINT CPCD1C TO COMPUTATION POINT CIRSMC
 489          KM    MARIOCPA DRAIN FROM 67TH AVE TO 75TH AVE.
 490          KM    ADJUST SLOPE FROM .0011 TO REFLECT A VELOCITY OF LESS THAN 5 FT/SEC
 491          RS       3    ELEV      -1
 492          RC    .030    .030    .030    3600   .0007
 493          RX       0      10      20      45     155     180     190     200
 494          RY   990.2   990.1     990     985     985     990   990.1   990.2
              *
              *
              * DDM   ***** Updated *****
1                                      HEC-1 INPUT                                      PAGE 16

LINE          ID.......1.......2.......3.......4.......5.......6.......7.......8.......9......10

 495          KK   ER55B
 496          KM   SUB-BASIN ER55B
 497          KM   24-HOUR SCS TYPE II RAINFALL WAS USED TO FIND TC & R FOR THIS BASIN
 498          KM   THIS BASIN USED RAINFALL REDUCTION FACTOR OF  .934
 499          KM     L =  .79  Kb = .050  Adj. Slope =    8.0
 500          BA    .256
 501          LG    .260    .260   6.000    .210  27.000
 502          UC    .908    .599
 503          UA       0       5      16      30      65      77      84      90      94      97
 504          UA     100
              *
              * DDM   ***** Preserved *****

 505          KK   ER55R
 506          KM   DIVERT RETENTION VOLUME
 507          DT   RET55    19.2
 508          DI       0    1000   10000
 509          DQ       0    1000   10000
              *
              *
              * DDM   ***** Preserved *****

 510          KK   RE59B
 511          KM   ROUTE FLOWS FROM CONCENTRATION POINT CRE55B TO CP CER59B
 512          KM   ROUTING REVISED TO REFLECT URBANIZED CONDITIONS
 513          RS       2    ELEV      -1
 514          RC    .035    .035    .035    2600    .002
 515          RX       0      30      50      55      65      70      90     120
 516          RY    1026    1024    1023    1020    1020    1023    1024    1026
              *
              * DDM   ***** Updated *****

 517          KK   ER59B
 518          KM   SUB-BASIN ER59B
 519          KM   24-HOUR SCS TYPE II RAINFALL WAS USED TO FIND TC & R FOR THIS BASIN
 520          KM   THIS BASIN USED RAINFALL REDUCTION FACTOR OF  .934
 521          KM     L =  .95  Kb = .030  Adj. Slope =    8.0
 522          BA    .259
 523          LG    .130    .250   5.000    .370  71.000
 524          UC    .671    .492
 525          UA       0       5      16      30      65      77      84      90      94      97
 526          UA     100
              *
              * DDM   ***** Preserved *****

 527          KK   ER59R
 528          KM   DIVERT RETENTION VOLUME
 529          DT   RET59    23.2
 530          DI       0    1000   10000
 531          DQ       0    1000   10000
              *
              * DDM   ***** Preserved *****
1                                      HEC-1 INPUT                                      PAGE 17

LINE          ID.......1.......2.......3.......4.......5.......6.......7.......8.......9......10

 532          KK  CER59B
 533          KM   COMBINE ROUTED FLOW FROM CP CRE55B TO RUNOFF FROM SUBBASIN ER59B
 534          HC       2
              *
              *
              * DDM   ***** Updated *****
```

```
 535          KK  RIR63B
 536          KM   CP CIR63B IS LOCATED ON THE WESTERN EDGE OF THE STUDY AREA WHICH IS BOUNDED
 537          KM   BY A CONCRETE IRRIGATION CANAL AND EARTHEN ROADWAY.  THE IRRIGATION CANAL IS
 538          KM   OVERTOPPED AND FLOW CONTINUES ITS NATURAL FLOW PATH TO THE WEST.  THE
 539          KM   FLOW IS APPROXIMATELY 45 CFS SOUTH TO MARICOPA DRAIN.
 540          DT  DIR63B
 541          DI       0      45     100     200     400     600     800
 542          DQ       0       0      55     155     355     555     755
              *
              * DDM   ***** Updated *****

 543          KK   IR63B
 544          KM   SUB-BASIN IR63B
 545          KM   24-HOUR SCS TYPE II RAINFALL WAS USED TO FIND TC & R FOR THIS BASIN
 546          KM   THIS BASIN USED RAINFALL REDUCTION FACTOR OF  .934
 547          KM     L =  .82  Kb = .034  Adj. Slope =   11.0
 548          BA    .124
 549          LG    .130    .250   4.800    .400  71.000
 550          UC    .575    .561
 551          UA       0       5      16      30      65      77      84      90      94      97
 552          UA     100
              *
              * DDM   ***** Preserved *****

 553          KK    IR63
 554          KM   DIVERT RETENTION VOLUME
 555          DT   RET63    11.2
 556          DI       0    1000   10000
 557          DQ       0    1000   10000
              *
              * DDM   ***** Preserved *****

 558          KK  CIR63B
 559          KM   COMBINE ROUTED FLOW FROM CP CER59B AND RUNOFF OF SUB-BASINS IR63B & IR62B
 560          HC       2
              *
              * DDM   ***** Preserved *****

 561          KK  RIR65C
 562          KM    ROUTE RETRIEVED FLOW FROM SUB-BASIN IR63B TO COMPUTATION POINT CIR65C
 563          KM   CROSS-SECTION REVISED TO REFLECT URBANIZED CONDITIONS
 564          RS       7    ELEV      -1
 565          RC   0.030   0.030   0.030    3300  0.0010
 566          RX       0       1      11      21      26      31      41      46
 567          RY       6       5       4       1       1       4       5       6
              *
              * DDM   ***** Updated *****
```



```
LINE          ID.......1.......2.......3.......4.......5.......6.......7.......8.......9......10

 568          KK   IR65C
 569          KM   SUB-BASIN IR65C
 570          KM   24-HOUR SCS TYPE II RAINFALL WAS USED TO FIND TC & R FOR THIS BASIN
 571          KM   THIS BASIN USED RAINFALL REDUCTION FACTOR OF  .934
 572          KM     L =  .84  Kb = .052  Adj. Slope =   13.0
 573          BA    .170
 574          LG    .280    .250   4.800    .360  21.000
 575          UC    .829    .718
 576          UA       0       5      16      30      65      77      84      90      94      97
 577          UA     100
              *
              * DDM   ***** Preserved *****

 578          KK   IR65R
 579          KM   DIVERT RETENTION VOLUME
 580          DT  RET65C    14.4
 581          DI       0    1000   10000
 582          DQ       0    1000   10000
              *
              * DDM   ***** Preserved *****

 583          KK  CIR65C
 584          KM   COMBINE RETRIEVED ROUTED FLOW FROM SUB-BASIN IR63B TO RUNOFF FROM SUB-BASIN
 585          KM   IR65C
 586          HC       2
              *
              * DDM   ***** Preserved *****

 587          KK   RIRDC
 588          KM   ROUTE FLOW FROM COMPUTATION POINT CIR65C TO COMPUTATION POINT CIRDC
 589          KM   CROSS-SECTION REVISED TO REFLECT URBANIZED CONDITIONS
 590          RS       2    ELEV      -1
 591          RC    0.03    0.03    0.03    3200  0.0018
 592          RX       0       1      10      20      30      40      50      51
 593          RY  1014.5    1014    1013    1010    1010    1013    1014  1014.5
              *
              * DDM   ***** Preserved *****

 594          KK  DIIRDC
 595          KM    ROUTED FLOW FROM COMPUTATION POINT CIR65C IS SPLIT AT COMPUTATION POINT
 596          KM    CIRDC
 597          DT  RIR65C
 598          DI       0      16      34      51      71      80     100     120     150
```



```
 599          DQ       0      16      25      32      40      49      69      89     119
              *
              * DDM   ***** Updated *****

 600          KK    IRDC
 601          KM   SUB-BASIN IRDC
 602          KM   24-HOUR SCS TYPE II RAINFALL WAS USED TO FIND TC & R FOR THIS BASIN
 603          KM   THIS BASIN USED RAINFALL REDUCTION FACTOR OF  .934
 604          KM     L = 1.47  Kb = .038  Adj. Slope =   12.0
 605          BA    .525
 606          LG    .190    .250   4.800    .370  51.000
```



```
LINE          ID.......1.......2.......3.......4.......5.......6.......7.......8.......9......10

 607          UC    .958    .694
 608          UA       0       5      16      30      65      77      84      90      94      97
 609          UA     100
              *
              * DDM   ***** Preserved *****

 610          KK    IRDR
 611          KM   DIVERT RETENTION VOLUME
 612          DT  RETRDC    43.2
 613          DI       0    1000   10000
 614          DQ       0    1000   10000
              *
              * DDM   ***** Preserved *****

 615          KK   CIRDC
 616          KM    COMBINE ROUTED FLOW FROM COMPUTATION POINT CIR65C TO RUNOFF FROM SUB-BASIN
 617          KM    IRDC
 618          HC       2
              *
              * DDM   ***** Preserved *****

 619          KK  RIRSMC
 620          KM    ROUTE FLOW COMPUTATION POINT CIRDC TO COMPUTATION POINT CIRSMC
 621          KM   CROSS-SECTION REVISED TO REFLECT URBANIZED CONDITIONS
 622          RS       3    ELEV      -1
 623          RC   0.035   0.035   0.035    3400  0.0058
 624          RX       0      40      60      70      80      90     110     150
 625          RY    1006    1005    1004     999     999    1004    1005    1006
              *
              * DDM   ***** Updated *****

 626          KK   IRSMC
 627          KM   SUB-BASIN IRSMC
 628          KM   24-HOUR SCS TYPE II RAINFALL WAS USED TO FIND TC & R FOR THIS BASIN
 629          KM   THIS BASIN USED RAINFALL REDUCTION FACTOR OF  .934
 630          KM     L =  .88  Kb = .043  Adj. Slope =   32.0
 631          BA    .241
 632          LG    .210    .250   4.500    .430  34.000
 633          UC    .479    .332
 634          UA       0       5      16      30      65      77      84      90      94      97
 635          UA     100
              *
              * DDM   ***** Preserved *****

 636          KK   IRSMR
 637          KM   DIVERT RETENTION VOLUME
 638          KM   RELAXED RETENTION VOLUME FROM 20.0 AC-FT
 639          DT  RETSMC    19.1
 640          DI       0    1000   10000
 641          DQ       0    1000   10000
              *
              * DDM   ***** Preserved *****
```



```
LINE          ID.......1.......2.......3.......4.......5.......6.......7.......8.......9......10

 642          KK  CIRSMS
 643          KM
 644          HC       2
              *
              * DDM   ***** Preserved *****

 645          KK  CIRSMC
 646          KM    COMBINE FLOWS IN MARICOPA DRAIN JUST WEST OF 75TH AVE
 647          HC       2
              *
              * DDM   ***** Updated *****

 648          KK    CD2C
 649          KM   SUB-BASIN CD2C
 650          KM   24-HOUR SCS TYPE II RAINFALL WAS USED TO FIND TC & R FOR THIS BASIN
 651          KM   THIS BASIN USED RAINFALL REDUCTION FACTOR OF  .934
 652          KM     L = 1.57  Kb = .043  Adj. Slope =    4.0
 653          BA    .598
 654          LG    .240    .150   8.400    .090  31.000
 655          UC   1.500   1.116
 656          UA       0       5      16      30      65      77      84      90      94      97
 657          UA     100
              *
              * DDM   ***** Preserved *****
```

```
          KK    CD2R
          KM   DIVERT RETENTION VOLUME
          KM   RELAXED RETENTION VOLUME FROM 44.8 AC-FT.
          DT   RET2C    39.7
          DI       0    1000   10000
          DQ       0    1000   10000
          *
          *
          * DDM   ***** Preserved *****

          KK   CCD2C
          KM   COMBINE FLOW FROM CD2C AND MARIOCPA DRAIN
          KM   MARICOPA DRAIN AT 1000 FT EAST OF 75TH AVE AND SOUTH MOUNTAIN AVE. (1/2 MILE
          KM   BETWEEN DOBBINS AND BASELINE ROADS.)
          HC       2
          *
          * DDM   ***** Preserved *****

          KK  RCD3C1
          KM    MARICOPA DRAIN FROM JUST EAST OF 75TH AVE ALONG POWERLINE RD (INDIAN
          KM    RESERVATION BOUNDARY).
          KM    ADJUST SLOPE FROM .0011 TO REFLECT A VELOCITY OF LESS THAN 5 FT/SEC
          RS       2    ELEV      -1
          RC    .030    .030    .030    3700   .0007
          RX       0      10      20      45     165     190     200     210
          RY   986.2   986.1     986     981     981     986   986.1   986.2
          *
          * DDM   ***** Updated *****
1                                      HEC-1 INPUT                                        PAGE 21

     LINE ID.....1.....2.....3.....4.....5.....6.....7.....8.....9.....10


          KK   A67AC
          KM   SUB-BASIN A67AC
          KM   24-HOUR SCS TYPE II RAINFALL WAS USED TO FIND TC & R FOR THIS BASIN
          KM   THIS BASIN USED RAINFALL REDUCTION FACTOR OF  .934
          KM     L = 1.65  Kb = .042  Adj. Slope =    7.0
          BA    .618
          LG    .250    .250   5.100    .320  34.000
          UC   1.500   1.140
          UA       0       5      16      30      65      77      84      90      94      97
          UA     100
          *
          * DDM   ***** Preserved *****

          KK   A67AR
          KM   DIVERT RETENTION VOLUME
          DT  RET67A    38.4
          DI       0    1000   10000
          DQ       0    1000   10000
          *
          * DDM   ***** Preserved *****

          KK  RCD4C1
          KM   ROUTE FLOW FROM SUB-BASIN 67AC CPCD4C TO COMPUTATION POINT CPCD4C
          KM   CROSS-SECTION REVISED TO REFLECT URBANIZED CONDITIONS
          RS       2    ELEV      -1
          RC   0.035   0.035   0.035    2600  0.0024
          RX       0      40      50      55      60      65      70     110
          RY     988     987     986     983     983     986     987     988
          *
          * DDM   ***** Updated *****

          KK    CD4C
          KM   SUB-BASIN CD4C
          KM   24-HOUR SCS TYPE II RAINFALL WAS USED TO FIND TC & R FOR THIS BASIN
          KM   THIS BASIN USED RAINFALL REDUCTION FACTOR OF  .934
          KM     L =  .64  Kb = .051  Adj. Slope =    9.0
          BA    .190
          LG    .250    .250   4.900    .350  29.000
          UC    .771    .500
          UA       0       5      16      30      65      77      84      90      94      97
          UA     100
          *
          * DDM   ***** Preserved *****

          KK    CD4R
          KM   DIVERT RETENTION VOLUME
          DT  RETD4C    13.6
          DI       0    1000   10000
          DQ       0    1000   10000
          *
          * DDM   ***** Preserved *****
1                                      HEC-1 INPUT                                        PAGE 22

     LINE ID.....1.....2.....3.....4.....5.....6.....7.....8.....9.....10


          KK  CPCD4C
          KM    COMBINE ROUTED FLOW FROM SUB-BASIN 67AC TO RUNOFF FROM SUB-BASIN CD4C
          HC       2
          *
          * DDM   ***** Preserved *****
```



```
          KK  RCD3C2
          KM   ROUTE FLOW FROM COMPUTATION POINT CPCD4C TO COMPUTATION POINT CPCD3C
          KM   CROSS-SECTION REVISED TO REFLECT URBANIZED CONDITIONS
          RS       3    ELEV      -1
          RC   0.035   0.035   0.035    5200  0.0024
          RX       0      40      50      55      60      65      70     110
          RY     988     987     986     983     983     986     987     988
          *
          * DDM   ***** Updated *****

          KK    CD3C
          KM   SUB-BASIN CD3C
          KM   24-HOUR SCS TYPE II RAINFALL WAS USED TO FIND TC & R FOR THIS BASIN
          KM   THIS BASIN USED RAINFALL REDUCTION FACTOR OF  .934
          KM     L = 1.15  Kb = .044  Adj. Slope =   10.0
          BA    .480
          LG    .240    .150   7.000    .140  33.000
          UC    .929    .579
          UA       0       5      16      30      65      77      84      90      94      97
          UA     100
          *
          * DDM   ***** Preserved *****

          KK    CD3R
          KM   DIVERT RETENTION VOLUME
          KM   RELAXED RETENTION VOLUME FROM 35.2 AC-FT.
          DT  RETD3C    32.6
          DI       0    1000   10000
          DQ       0    1000   10000
          *
          * DDM   ***** Preserved *****

          KK  CPCD3C
          KM   COMBINE ROUTED FLOW FROM COMPUTATION POINT CPCD4C, ROUTED FLOW FROM DIVERSION
          KM   POINT AT BASELINE ROAD WITH RUNOFF FROM SUB-BASIN CD3C
          HC       3
          ZZ
```

1

SCHEMATIC DIAGRAM OF STREAM NETWORK

INPUT LINE NO.

(V) ROUTING (---->) DIVERSION OR PUMP FLOW

(.) CONNECTOR (<---) RETURN OF DIVERTED OR PUMPED FLOW

```
 23   VR47C
        .
        .
 50     .-------->  RET47C
 47   VR47R
      V
      V
 53  RBR511
        .
        .
 60     .      AVR51C
        .         .
        .         .
 72     .         .-------->  RET51C
 70     .      AVR51R
        .      V
        .      V
 75     .      RBR512
        .         .
        .         .
 82     .         .      BR51C
        .         .         .
        .         .         .
 95     .         .         .-------->  RET159
 92     .         .      BR51R
        .         .         .
        .         .         .
 98  CB51C.....................
        .
        .
102     .      DR43C
        .         .
        .         .
114     .         .-------->  RET43C
112     .      DR43R
        .      V
        .      V
117     .      ROA51A
        .         .
        .         .
121     .         .      ER47B
        .         .      V
        .         .      V
133     .         .      ERBASN
        .         .      V
        .         .      V
143     .         .      RER47B
        .         .         .
        .         .         .
147     .      CER47B.....
        .      V
        .      V
150     .      ROA51B
        .         .
        .         .
155     .         .      OA51B
        .         .         .
        .         .         .
167     .         .         .-------->   RET51
165     .         .      OA51R
        .         .         .
        .         .         .
170     .      CDR51.....
        .      V
        .      V
174     .      RDR51
        .      V
        .      V
179     .      BRBASN
        .      V
        .      V
189     .      DBR51
        .         .
        .         .
194  CB51D.....
        V
        V
198  RB1591
        .
        .
205     .      AVR55C
        .         .
        .         .
217     .         .-------->  RET55C
215     .      AVR55R
        .      V
        .      V
220     .      RB1592
        .         .
```



```
        .         .
227     .         .      BR159C
        .         .         .
        .         .         .
240     .         .         .-------->  RET159
237     .         .      BR159R
        .         .         .
        .         .         .
243     .         .         .      VR59C
        .         .         .         V
        .         .         .         V
253     .         .         .      RB1593
        .         .         .         .
        .         .         .         .
260  CB159N.....................................
        .
        .
265     .      OA55C
        .         .
        .         .
277     .         .-------->  RET55C
275     .      OA55R
        .      V
        .      V
280     .      RD57C
        .         .
        .         .
287     .         .      DR57C
        .         .         .
        .         .         .
299     .         .         .-------->   RET27
297     .         .      DR57R
        .         .         .
        .         .         .
302     .      CDR57C.....
        .      V
        .      V
306     .      RD59C
        .         .
        .         .
313     .         .      DR59C
        .         .         .
        .         .         .
325     .         .         .-------->  RET59C
323     .         .      DR59R
        .         .         .
        .         .         .
328     .      CDR59C.....
        .      V
        .      V
332     .      RB259
        .         .
        .         .
341     .         .      SM51C
        .         .         .
        .         .         .
353     .         .         .-------->  RET51C
351     .         .      SM51R
        .         .      V
        .         .      V
356     .         .      RB2591
        .         .      V
        .         .      V
364     .         .      RB2592
        .         .         .
        .         .         .
372     .         .         .      BR259C
        .         .         .         .
        .         .         .         .
385     .         .         .         .-------->  RET259
382     .         .         .      BR259R
        .         .         .         .
        .         .         .         .
388     .         .      CB259A.....
        .         .         .
        .         .         .
392     .      CB259S.....
        .         .
        .         .
395  CB259.....
        V
        V
398  RBR163
        .
        .
406     .      BR263C
        .         .
        .         .
419     .         .-------->  RET263
416     .      BR263R
        .         .
        .         .
422   63S.....
        .
        .
426     .      BR163C
```

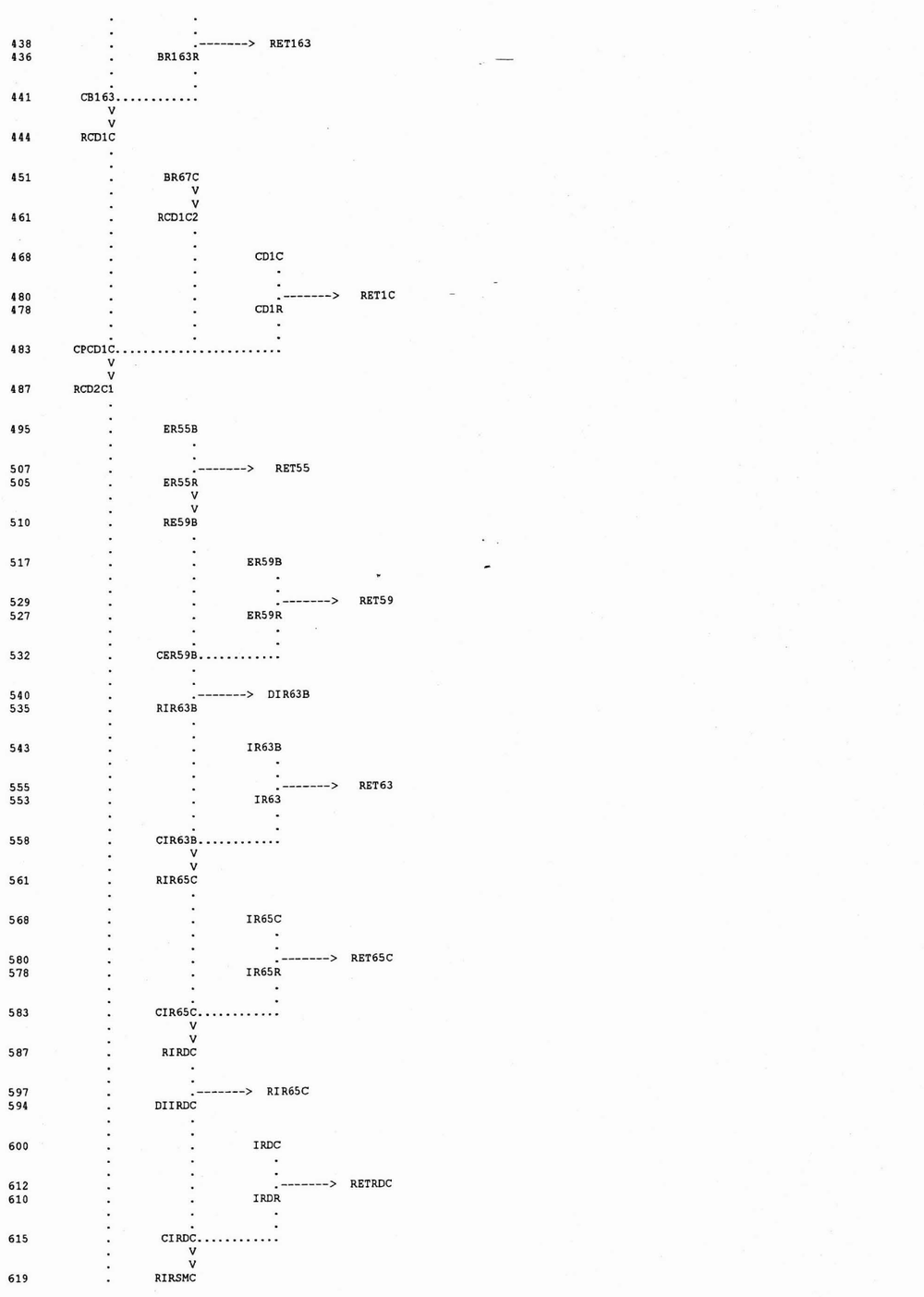

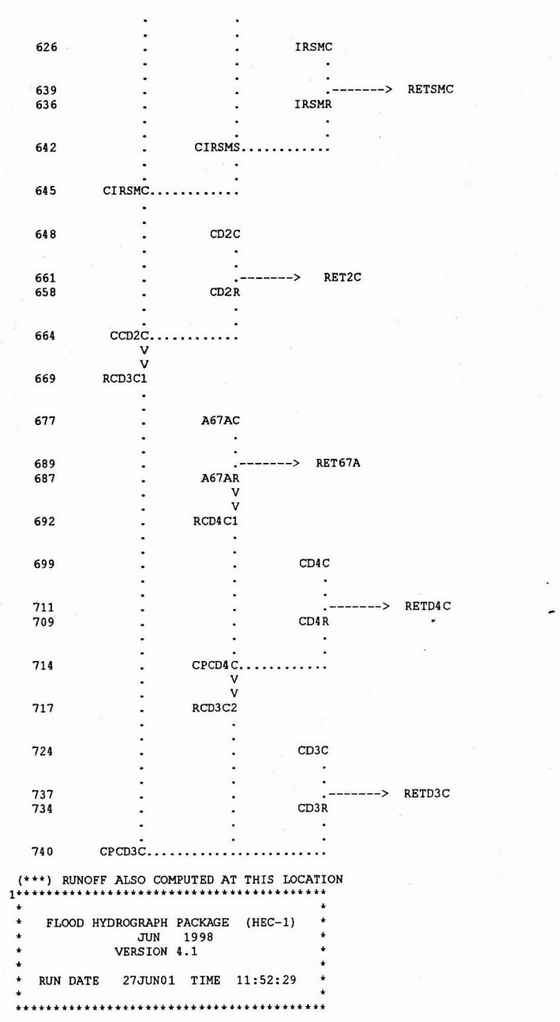

(***) RUNOFF ALSO COMPUTED AT THIS LOCATION

```
1*****************************************
*                                       *
*   FLOOD HYDROGRAPH PACKAGE  (HEC-1)   *
*              JUN  1998                *
*           VERSION 4.1                 *
*                                       *
*  RUN DATE   27JUN01  TIME  11:52:29   *
*                                       *
*****************************************
```

```
*****************************************
*                                       *
*    U.S. ARMY CORPS OF ENGINEERS       *
*    HYDROLOGIC ENGINEERING CENTER      *
*          609 SECOND STREET            *
*        DAVIS, CALIFORNIA 95616        *
*             (916) 756-1104            *
*                                       *
*****************************************
```

```
 FILENAME LAVALT6A.DAT
 LAVEEN ADMP ALTERNATIVE MODEL FOR ALTERNATIVE 6
 MAY 2001
 MODIFIED BY PROJECT ENGINEERING CONSULTANTS, LTD.


 LAVEEN ADMS (FINAL HEC-1) 100-YR 24-HR STORM          CBA FILE # 40916-02-30
 HIDDEN VALLEY WATERSHED/CHAMPION DRAIN WATERSHED
 INPUT FILE NAME  LAVFUT1A                      DATE: SEPT. 27,2000
 24-HOUR SCS TYPE II
80% RETENTION VOLUME OF FUTURE RETENTION

RELAXED RETENTION 1/2 MILE OF MARICOPA DRAIN
MINUS FIRST FLUSH OF 5YR 24HR VOLUME

MULTIPLAN FOR ROUTING WITHIN THE CHAMPION DRAIN
  PLAN 2: CHANNEL, S=.0020 ft/ft, n=.031, BW=14', SS=6:1, D=10', TW=124'

DDM MCUHP1 LAVEEN REVISED HYDROLOGY - FUTURE LANDUSE CONDITIONS
```

```
 22 IO        OUTPUT CONTROL VARIABLES
                    IPRNT          3  PRINT CONTROL
                    IPLOT          0  PLOT CONTROL
                    QSCAL         0.  HYDROGRAPH PLOT SCALE

    IT        HYDROGRAPH TIME DATA
                     NMIN          5  MINUTES IN COMPUTATION INTERVAL
                    IDATE     1    0  STARTING DATE
                    ITIME       0000  STARTING TIME
                       NQ        300  NUMBER OF HYDROGRAPH ORDINATES
                   NDDATE     2    0  ENDING DATE
                   NDTIME       0055  ENDING TIME
                    ICENT         19  CENTURY MARK

          COMPUTATION INTERVAL     .08 HOURS
               TOTAL TIME BASE   24.92 HOURS

       ENGLISH UNITS
            DRAINAGE AREA          SQUARE MILES
            PRECIPITATION DEPTH    INCHES
            LENGTH, ELEVATION      FEET
            FLOW                   CUBIC FEET PER SECOND
            STORAGE VOLUME         ACRE-FEET
            SURFACE AREA           ACRES
            TEMPERATURE            DEGREES FAHRENHEIT

*** *** *** *** *** *** *** *** *** *** *** *** *** *** *** *** *** *** *** *** *** *** *** *** *** *** *** *** *** *** *** *** *** ***

           **************
           *            *
 23 KK     *   VR47C    *
           *            *
           **************
                         SUB-BASIN VR47C
                         24-HOUR SCS TYPE II RAINFALL WAS USED TO FIND TC & R FOR THIS BASIN
                         THIS BASIN USED RAINFALL REDUCTION FACTOR OF  .934
                           L = 1.65  Kb = .042  Adj. Slope =    7.0
                         RAINFALL DEPTH OF 4.20 WAS SPACIALLY REDUCED AS SHOWN BY THE PB RECORD
                         THE FOLLOWING PC RECORD USED A 24-HR SCS TYPE II STORM

 29 IN        TIME DATA FOR INPUT TIME SERIES
                    JXMIN         15  TIME INTERVAL IN MINUTES
                   JXDATE     1    0  STARTING DATE
                   JXTIME          0  STARTING TIME

            SUBBASIN RUNOFF DATA

 28 BA        SUBBASIN CHARACTERISTICS
                    TAREA        .87  SUBBASIN AREA

              PRECIPITATION DATA

 32 PB              STORM       3.92  BASIN TOTAL PRECIPITATION

 32 PI          INCREMENTAL PRECIPITATION PATTERN
                  .00      .00      .00      .00      .00      .00      .00      .00      .00      .00
                  .00      .00      .00      .00      .00      .00      .00      .00      .00      .00
                  .00      .00      .00      .00      .00      .00      .00      .00      .00      .00
                  .00      .00      .00      .00      .00      .00      .00      .00      .00      .00
                  .00      .00      .00      .00      .00      .00      .00      .00      .00      .00
                  .00      .00      .00      .00      .00      .00      .00      .00      .00      .00
                  .00      .00      .00      .00      .00      .00      .00      .00      .00      .00
                  .00      .00      .00      .00      .00      .00      .00      .00      .00      .00
                  .00      .00      .00      .00      .00      .00      .00      .00      .00      .00
                  .00      .00      .00      .00      .00      .00      .00      .00      .00      .00
                  .00      .00      .00      .00      .00      .00      .00      .00      .00      .00
                  .00      .00      .00      .00      .00      .00      .00      .00      .00      .00
                  .00      .00      .00      .00      .00      .00      .00      .01      .00      .01
                  .01      .01      .01      .01      .01      .01      .01      .01      .03      .03
                  .03      .09      .09      .09      .01      .01      .01      .01      .01      .01
                  .01      .01      .01      .01      .01      .01      .00      .00      .00      .00
                  .00      .00      .00      .00      .00      .00      .00      .00      .00      .00
                  .00      .00      .00      .00      .00      .00      .00      .00      .00      .00
                  .00      .00      .00      .00      .00      .00      .00      .00      .00      .00
                  .00      .00      .00      .00      .00      .00      .00      .00      .00      .00
                  .00      .00      .00      .00      .00      .00      .00      .00      .00      .00
                  .00      .00      .00      .00      .00      .00      .00      .00      .00      .00
                  .00      .00      .00      .00      .00      .00      .00      .00      .00      .00
                  .00      .00      .00      .00      .00      .00      .00      .00      .00      .00
                  .00      .00      .00      .00      .00      .00      .00      .00      .00      .00
                  .00      .00      .00      .00      .00      .00      .00      .00      .00      .00
                  .00      .00      .00      .00      .00      .00      .00      .00      .00      .00
                  .00      .00      .00      .00      .00      .00      .00      .00      .00      .00
                  .00      .00      .00      .00      .00      .00      .00      .00

 43 LG        GREEN AND AMPT LOSS RATE
                    STRTL        .26  STARTING LOSS
                      DTH        .25  MOISTURE DEFICIT
                     PSIF       5.70  WETTING FRONT SUCTION
                    XKSAT        .25  HYDRAULIC CONDUCTIVITY
                    RTIMP      27.00  PERCENT IMPERVIOUS AREA

 44 UC        CLARK UNITGRAPH
```



```
                       TC       1.50  TIME OF CONCENTRATION
                        R        .94  STORAGE COEFFICIENT

 45 UA          ACCUMULATED-AREA VS. TIME,  11 ORDINATES
                  .0       5.0      16.0      30.0      65.0      77.0      84.0      90.0      94.0      97.0
               100.0

                                                  ***

                                         UNIT HYDROGRAPH PARAMETERS
                                   CLARK   TC=  1.50 HR,        R=   .94 HR
                                  SNYDER   TP=   .78 HR,       CP=   .46

                                              UNIT HYDROGRAPH
                                         68 END-OF-PERIOD ORDINATES
              8.       25.       50.       83.      118.      172.      255.      316.      334.      336.
            329.      322.      312.      300.      287.      272.      259.      246.      230.      210.
            193.      176.      161.      148.      135.      123.      113.      103.       95.       87.
             79.       72.       66.       61.       55.       51.       46.       42.       39.       36.
             33.       30.       27.       25.       23.       21.       19.       17.       16.       15.
             13.       12.       11.       10.        9.        9.        8.        7.        7.        6.
              5.        5.        5.        4.        4.        4.        3.        3.

     ***            ***            ***            ***            ***

                     HYDROGRAPH AT STATION    VR47C

   TOTAL RAINFALL =     3.92, TOTAL LOSS =     1.97, TOTAL EXCESS =     1.95

 PEAK FLOW      TIME                       MAXIMUM AVERAGE FLOW
                                  6-HR        24-HR       72-HR      24.92-HR
  (CFS)         (HR)
                         (CFS)
   460.        12.67               152.         45.         44.          44.
                       (INCHES)   1.622       1.935       1.936        1.936
                        (AC-FT)     75.         90.         90.          90.

                        CUMULATIVE AREA =     .87 SQ MI

*** *** *** *** *** *** *** *** *** *** *** *** *** *** *** *** *** *** *** *** *** *** *** *** *** *** *** *** *** *** *** *** *** ***

                 **************
                 *            *
 47 KK           *   VR47R    *
                 *            *
                 **************
                              DIVERT RETENTION VOLUME
                              RELAXED RETENTION VOLUME FROM 72.8 AC-FT

    DT           DIVERSION
                       ISTAD       RET47C  DIVERSION HYDROGRAPH IDENTIFICATION
                      DSTRMX        67.70  MAXIMUM VOLUME TO BE DIVERTED

    DI                INFLOW         .00   1000.00  10000.00

    DQ         DIVERTED FLOW         .00   1000.00  10000.00

                                                  ***
     ***            ***            ***            ***            ***

                     DIVERSION HYDROGRAPH    RET47C

 PEAK FLOW      TIME                       MAXIMUM AVERAGE FLOW
                                  6-HR        24-HR       72-HR      24.92-HR
  (CFS)         (HR)
                         (CFS)
   460.        12.67               127.         34.         33.          33.
                       (INCHES)   1.360       1.461       1.461        1.461
                        (AC-FT)     63.         68.         68.          68.

                        CUMULATIVE AREA =     .87 SQ MI

     ***            ***            ***            ***            ***

                     HYDROGRAPH AT STATION    VR47R

 PEAK FLOW      TIME                       MAXIMUM AVERAGE FLOW
                                  6-HR        24-HR       72-HR      24.92-HR
  (CFS)         (HR)
                         (CFS)
   157.        14.25                38.         11.         11.          11.
                       (INCHES)    .410        .475        .475         .475
                        (AC-FT)     19.         22.         22.          22.

                        CUMULATIVE AREA =     .87 SQ MI

*** *** *** *** *** *** *** *** *** *** *** *** *** *** *** *** *** *** *** *** *** *** *** *** *** *** *** *** *** *** *** *** *** ***
```

```
               **************
               *            *
  53 KK        *   RBR511   *
               *            *
               **************
                             ROUTE FLOW FROM COMPUTATION POINT CVR47C TO COMPUTATION POINT CB51C
                             MARICOPA DRAIN - 47TH AVE. TO 51ST AVE.

                    HYDROGRAPH ROUTING DATA

  56 RS               STORAGE ROUTING
                        NSTPS          2  NUMBER OF SUBREACHES
                         ITYP       ELEV  TYPE OF INITIAL CONDITION
                       RSVRIC      -1.00  INITIAL CONDITION
                            X        .00  WORKING R AND D COEFFICIENT

  57 RC               NORMAL DEPTH CHANNEL
                          ANL       .030  LEFT OVERBANK N-VALUE
                         ANCH       .030  MAIN CHANNEL N-VALUE
                          ANR       .030  RIGHT OVERBANK N-VALUE
                        RLNTH      3200.  REACH LENGTH
                          SEL      .0011  ENERGY SLOPE
                        ELMAX         .0  MAX. ELEV. FOR STORAGE/OUTFLOW CALCULATION

                                      CROSS-SECTION DATA
                           --- LEFT OVERBANK ---   ------ MAIN CHANNEL -------   --- RIGHT OVERBANK ---
  59 RY          ELEVATION   1008.20   1008.10   1008.00   1003.00   1003.00   1008.00   1008.10   1008.20
  58 RX           DISTANCE       .00     10.00     20.00     45.00    115.00    140.00    150.00    160.00

                                                ***

                                     COMPUTED STORAGE-OUTFLOW-ELEVATION DATA

             STORAGE       .00      1.43      2.92      4.47      6.07      7.72      9.43     11.20     13.02     14.89
             OUTFLOW       .00     13.39     42.78     84.66    137.73    201.26    274.81    358.09    450.92    553.18
           ELEVATION   1003.00   1003.27   1003.55   1003.82   1004.09   1004.37   1004.64   1004.92   1005.19   1005.46

             STORAGE     16.82     18.81     20.85     22.95     25.10     27.30     29.56     31.88     34.25     36.95
             OUTFLOW    664.80    785.74    916.01   1055.61   1204.58   1362.96   1530.81   1708.20   1895.20   2115.33
           ELEVATION   1005.74   1006.01   1006.28   1006.56   1006.83   1007.11   1007.38   1007.65   1007.93   1008.20

    ***             ***             ***             ***             ***

                        HYDROGRAPH AT STATION   RBR511

 PEAK FLOW      TIME                          MAXIMUM AVERAGE FLOW
                                  6-HR        24-HR         72-HR       24.92-HR
   (CFS)        (HR)
                          (CFS)
     97.       14.92                 36.          11.           10.          10.
                       (INCHES)    .388         .460          .460         .460
                        (AC-FT)     18.          21.           21.          21.

 PEAK STORAGE   TIME                        MAXIMUM AVERAGE STORAGE
                                  6-HR        24-HR         72-HR       24.92-HR
  (AC-FT)       (HR)
      2.       14.92                  1.           0.            0.           0.

 PEAK STAGE     TIME                          MAXIMUM AVERAGE STAGE
                                  6-HR        24-HR         72-HR       24.92-HR
  (FEET)        (HR)
  1003.89      14.92             1003.46      1003.15       1003.14      1003.14

                    CUMULATIVE AREA =      .87 SQ MI

*** *** *** *** *** *** *** *** *** *** *** *** *** *** *** *** *** *** *** *** *** *** *** *** *** *** *** *** *** *** *** *** *** ***

               **************
               *            *
  60 KK        *   AVR51C   *
               *            *
               **************
                             SUB-BASIN AVR51C
                             24-HOUR SCS TYPE II RAINFALL WAS USED TO FIND TC & R FOR THIS BASIN
                             THIS BASIN USED RAINFALL REDUCTION FACTOR OF  .934
                               L =  .86  Kb = .049  Adj. Slope =   10.0

                    SUBBASIN RUNOFF DATA

  65 BA               SUBBASIN CHARACTERISTICS
                          TAREA        .28  SUBBASIN AREA

                      PRECIPITATION DATA

  32 PB                    STORM       3.92  BASIN TOTAL PRECIPITATION

  32 PI                  INCREMENTAL PRECIPITATION PATTERN
                        .00      .00      .00      .00      .00      .00      .00      .00      .00      .00
                        .00      .00      .00      .00      .00      .00      .00      .00      .00      .00
```



```
                        .00      .00      .00      .00      .00      .00      .00      .00      .00      .00
                        .00      .00      .00      .00      .00      .00      .00      .00      .00      .00
                        .00      .00      .00      .00      .00      .00      .00      .00      .00      .00
                        .00      .00      .00      .00      .00      .00      .00      .00      .00      .00
                        .00      .00      .00      .00      .00      .00      .00      .00      .00      .00
                        .00      .00      .00      .00      .00      .00      .00      .00      .00      .00
                        .00      .00      .00      .00      .00      .00      .00      .00      .00      .00
                        .00      .00      .00      .00      .00      .00      .00      .00      .00      .00
                        .00      .00      .00      .00      .00      .00      .00      .00      .00      .00
                        .00      .00      .00      .00      .00      .00      .00      .00      .00      .00
                        .00      .00      .00      .00      .00      .00      .00      .01      .00      .01
                        .01      .01      .01      .01      .01      .01      .01      .01      .03      .03
                        .03      .09      .09      .09      .01      .01      .01      .01      .01      .01
                        .01      .01      .01      .01      .01      .01      .00      .00      .00      .00
                        .00      .00      .00      .00      .00      .00      .00      .00      .00      .00
                        .00      .00      .00      .00      .00      .00      .00      .00      .00      .00
                        .00      .00      .00      .00      .00      .00      .00      .00      .00      .00
                        .00      .00      .00      .00      .00      .00      .00      .00      .00      .00
                        .00      .00      .00      .00      .00      .00      .00      .00      .00      .00
                        .00      .00      .00      .00      .00      .00      .00      .00      .00      .00
                        .00      .00      .00      .00      .00      .00      .00      .00      .00      .00
                        .00      .00      .00      .00      .00      .00      .00      .00      .00      .00
                        .00      .00      .00      .00      .00      .00      .00      .00      .00      .00
                        .00      .00      .00      .00      .00      .00      .00      .00      .00      .00
                        .00      .00      .00      .00      .00      .00      .00      .00      .00      .00
                        .00      .00      .00      .00      .00      .00      .00      .00      .00      .00
                        .00      .00      .00      .00      .00      .00      .00      .00

  66 LG               GREEN AND AMPT LOSS RATE
                        STRTL        .25  STARTING LOSS
                          DTH        .19  MOISTURE DEFICIT
                         PSIF       6.60  WETTING FRONT SUCTION
                       XKSAT         .17  HYDRAULIC CONDUCTIVITY
                        RTIMP      30.00  PERCENT IMPERVIOUS AREA

  67 UC               CLARK UNITGRAPH
                           TC        .83  TIME OF CONCENTRATION
                            R        .55  STORAGE COEFFICIENT

  68 UA               ACCUMULATED-AREA VS. TIME,  11 ORDINATES
                          .0       5.0      16.0      30.0      65.0      77.0      84.0      90.0      94.0      97.0
                       100.0

                                                ***

                                      UNIT HYDROGRAPH PARAMETERS
                              CLARK   TC=   .83 HR,        R=   .55 HR
                             SNYDER   TP=   .43 HR,       CP=   .45

                                           UNIT HYDROGRAPH
                                    39 END-OF-PERIOD ORDINATES
            8.       32.       68.      135.      189.      192.      185.      174.      160.      147.
          130.      112.       96.       82.       71.       61.       52.       45.       38.       33.
           28.       24.       21.       18.       15.       13.       11.       10.        8.        7.
            6.        5.        4.        4.        3.        3.        2.        2.        2.

    ***             ***             ***             ***             ***

                        HYDROGRAPH AT STATION   AVR51C

   TOTAL RAINFALL =    3.92, TOTAL LOSS =    1.76, TOTAL EXCESS =    2.16

 PEAK FLOW      TIME                          MAXIMUM AVERAGE FLOW
                                  6-HR        24-HR         72-HR       24.92-HR
   (CFS)        (HR)
                          (CFS)
    261.       12.33                 55.          16.           16.          16.
                       (INCHES)   1.806        2.145         2.147        2.147
                        (AC-FT)     27.          33.           33.          33.

                    CUMULATIVE AREA =      .28 SQ MI

*** *** *** *** *** *** *** *** *** *** *** *** *** *** *** *** *** *** *** *** *** *** *** *** *** *** *** *** *** *** *** *** *** ***

               **************
               *            *
  70 KK        *   AVR51R   *
               *            *
               **************
                       DIVERT RETENTION VOLUME

  DT               DIVERSION
                         ISTAD     RET51C  DIVERSION HYDROGRAPH IDENTIFICATION
                        DSTRMX      21.60  MAXIMUM VOLUME TO BE DIVERTED

  DI                    INFLOW        .00   1000.00  10000.00

  DQ              DIVERTED FLOW       .00   1000.00  10000.00

                                                ***

    ***             ***             ***             ***             ***
```

DIVERSION HYDROGRAPH RET51C

PEAK FLOW	TIME		MAXIMUM AVERAGE FLOW			
			6-HR	24-HR	72-HR	24.92-HR
(CFS)	(HR)					
		(CFS)				
261.	12.33		41.	11.	10.	10.
		(INCHES)	1.323	1.421	1.421	1.421
		(AC-FT)	20.	22.	22.	22.

CUMULATIVE AREA = .28 SQ MI

*** *** *** *** ***

HYDROGRAPH AT STATION AVR51R

PEAK FLOW	TIME		MAXIMUM AVERAGE FLOW			
			6-HR	24-HR	72-HR	24.92-HR
(CFS)	(HR)					
		(CFS)				
133.	13.00		19.	6.	5.	5.
		(INCHES)	.636	.726	.726	.726
		(AC-FT)	10.	11.	11.	11.

CUMULATIVE AREA = .28 SQ MI

*** ***

```
              **************
              *            *
 75 KK        *   RBR512   *
              *            *
              **************
```

ROUTE FLOW FROM SUB-BASIN AVR51C TO COMPUTATION POINT CB51C
ROUTING REVISED TO REFLECT AN URBANIZED CONDITION

HYDROGRAPH ROUTING DATA

78 RS STORAGE ROUTING
NSTPS 4 NUMBER OF SUBREACHES
ITYP ELEV TYPE OF INITIAL CONDITION
RSVRIC -1.00 INITIAL CONDITION
X .00 WORKING R AND D COEFFICIENT

79 RC NORMAL DEPTH CHANNEL
ANL .035 LEFT OVERBANK N-VALUE
ANCH .035 MAIN CHANNEL N-VALUE
ANR .035 RIGHT OVERBANK N-VALUE
RLNTH 3600. REACH LENGTH
SEL .0010 ENERGY SLOPE
ELMAX 1010.5 MAX. ELEV. FOR STORAGE/OUTFLOW CALCULATION

CROSS-SECTION DATA

		--- LEFT OVERBANK ---		------ MAIN CHANNEL -------				--- RIGHT OVERBANK ---	
81 RY	ELEVATION	1010.50	1009.70	1009.00	1006.00	1006.00	1009.00	1009.70	1010.50
80 RX	DISTANCE	.00	20.00	40.00	46.00	56.00	62.00	82.00	102.00

***

COMPUTED STORAGE-OUTFLOW-ELEVATION DATA

STORAGE	.00	.20	.43	.67	.93	1.21	1.51	1.82	2.16	2.51
OUTFLOW	.00	1.23	3.96	7.91	12.98	19.15	26.42	34.80	44.31	54.96
ELEVATION	1006.00	1006.24	1006.47	1006.71	1006.95	1007.18	1007.42	1007.66	1007.89	1008.13
STORAGE	2.88	3.27	3.68	4.12	4.78	5.69	6.87	8.29	9.93	11.81
OUTFLOW	66.78	79.81	94.06	110.64	131.71	156.85	187.39	224.29	268.14	319.68
ELEVATION	1008.37	1008.60	1008.84	1009.08	1009.32	1009.55	1009.79	1010.03	1010.26	1010.50

*** *** *** *** ***

HYDROGRAPH AT STATION RBR512

PEAK FLOW	TIME		MAXIMUM AVERAGE FLOW			
			6-HR	24-HR	72-HR	24.92-HR
(CFS)	(HR)					
		(CFS)				
82.	13.58		19.	5.	5.	5.
		(INCHES)	.614	.710	.710	.710
		(AC-FT)	9.	11.	11.	11.
PEAK STORAGE	TIME		MAXIMUM AVERAGE STORAGE			
			6-HR	24-HR	72-HR	24.92-HR
(AC-FT)	(HR)					
1.	13.58		0.	0.	0.	0.
PEAK STAGE	TIME		MAXIMUM AVERAGE STAGE			
			6-HR	24-HR	72-HR	24.92-HR
(FEET)	(HR)					

1008.64	13.58	1007.01	1006.35	1006.33	1006.33

CUMULATIVE AREA = .28 SQ MI

*** ***

```
              **************
              *            *
 82 KK        *   BR51C    *
              *            *
              **************
```

SUB-BASIN BR51C
24-HOUR SCS TYPE II RAINFALL WAS USED TO FIND TC & R FOR THIS BASIN
THIS BASIN USED RAINFALL REDUCTION FACTOR OF .934
L = 1.21 Kb = .043 Adj. Slope = 6.0

SUBBASIN RUNOFF DATA

87 BA SUBBASIN CHARACTERISTICS
TAREA .70 SUBBASIN AREA

PRECIPITATION DATA

32 PB STORM 3.92 BASIN TOTAL PRECIPITATION

32 PI INCREMENTAL PRECIPITATION PATTERN

.00	.00	.00	.00	.00	.00	.00	.00	.00	.00
.00	.00	.00	.00	.00	.00	.00	.00	.00	.00
.00	.00	.00	.00	.00	.00	.00	.00	.00	.00
.00	.00	.00	.00	.00	.00	.00	.00	.00	.00
.00	.00	.00	.00	.00	.00	.00	.00	.00	.00
.00	.00	.00	.00	.00	.00	.00	.00	.00	.00
.00	.00	.00	.00	.00	.00	.00	.00	.00	.00
.00	.00	.00	.00	.00	.00	.00	.00	.00	.00
.00	.00	.00	.00	.00	.00	.00	.00	.00	.00
.00	.00	.00	.00	.00	.00	.00	.00	.00	.00
.00	.00	.00	.00	.00	.00	.00	.00	.00	.00
.00	.00	.00	.00	.00	.00	.00	.00	.00	.00
.00	.00	.00	.00	.00	.00	.00	.01	.00	.01
.01	.01	.01	.01	.01	.01	.01	.01	.03	.03
.03	.09	.09	.09	.01	.01	.01	.01	.01	.01
.01	.01	.01	.01	.01	.01	.00	.00	.00	.00
.00	.00	.00	.00	.00	.00	.00	.00	.00	.00
.00	.00	.00	.00	.00	.00	.00	.00	.00	.00
.00	.00	.00	.00	.00	.00	.00	.00	.00	.00
.00	.00	.00	.00	.00	.00	.00	.00	.00	.00
.00	.00	.00	.00	.00	.00	.00	.00	.00	.00
.00	.00	.00	.00	.00	.00	.00	.00	.00	.00
.00	.00	.00	.00	.00	.00	.00	.00	.00	.00
.00	.00	.00	.00	.00	.00	.00	.00	.00	.00
.00	.00	.00	.00	.00	.00	.00	.00	.00	.00
.00	.00	.00	.00	.00	.00	.00	.00	.00	.00
.00	.00	.00	.00	.00	.00	.00	.00	.00	.00
.00	.00	.00	.00	.00	.00	.00	.00	.00	.00
.00	.00	.00	.00	.00	.00	.00	.00		

88 LG GREEN AND AMPT LOSS RATE
STRTL .25 STARTING LOSS
DTH .25 MOISTURE DEFICIT
PSIF 4.90 WETTING FRONT SUCTION
XKSAT .35 HYDRAULIC CONDUCTIVITY
RTIMP 31.00 PERCENT IMPERVIOUS AREA

89 UC CLARK UNITGRAPH
TC 1.33 TIME OF CONCENTRATION
R .72 STORAGE COEFFICIENT

90 UA ACCUMULATED-AREA VS. TIME, 11 ORDINATES

.0	5.0	16.0	30.0	65.0	77.0	84.0	90.0	94.0	97.0
100.0									

***

UNIT HYDROGRAPH PARAMETERS
CLARK TC= 1.33 HR, R= .72 HR
SNYDER TP= .67 HR, CP= .49

UNIT HYDROGRAPH
53 END-OF-PERIOD ORDINATES

9.	31.	62.	101.	150.	234.	311.	336.	334.	323.
311.	296.	279.	261.	243.	228.	208.	185.	165.	147.
131.	117.	104.	93.	82.	73.	65.	58.	52.	46.
41.	37.	33.	29.	26.	23.	21.	18.	16.	15.
13.	12.	10.	9.	8.	7.	6.	6.	5.	5.
4.	4.	3.							

*** *** *** *** ***

HYDROGRAPH AT STATION BR51C

TOTAL RAINFALL = 3.92, TOTAL LOSS = 1.94, TOTAL EXCESS = 1.99

```
 PEAK FLOW      TIME                                 MAXIMUM AVERAGE FLOW
                                         6-HR        24-HR       72-HR      24.92-HR
   (CFS)        (HR)
                              (CFS)
     432.      12.58                     122.         37.         36.         36.
                            (INCHES)    1.618       1.969       1.970       1.970
                             (AC-FT)      60.         73.         73.         73.

                             CUMULATIVE AREA =     .70 SQ MI

*** *** *** *** *** *** *** *** *** *** *** *** *** *** *** *** *** *** *** *** *** *** *** *** *** *** *** *** *** *** *** *** *** ***

              *************
              *           *
  92 KK       *   BR51R   *
              *           *
              *************
                               DIVERT RETENTION VOLUME
                               RELAXED RETENTION VOLUME FROM 53.6 AC-FT

   DT            DIVERSION
                          ISTAD        RET159  DIVERSION HYDROGRAPH IDENTIFICATION
                          DSTRMX        50.50  MAXIMUM VOLUME TO BE DIVERTED

   DI                    INFLOW           .00   1000.00  10000.00

   DQ           DIVERTED FLOW             .00   1000.00  10000.00

                                                                                   ***

     ***            ***             ***             ***             ***

                             DIVERSION HYDROGRAPH    RET159

 PEAK FLOW      TIME                                 MAXIMUM AVERAGE FLOW
                                         6-HR        24-HR       72-HR      24.92-HR
   (CFS)        (HR)
                              (CFS)
     432.      12.58                      94.         25.         25.         25.
                            (INCHES)    1.248       1.355       1.355       1.355
                             (AC-FT)      47.         50.         50.         50.

                             CUMULATIVE AREA =     .70 SQ MI

     ***            ***             ***             ***             ***

                             HYDROGRAPH AT STATION     BR51R

 PEAK FLOW      TIME                                 MAXIMUM AVERAGE FLOW
                                         6-HR        24-HR       72-HR      24.92-HR
   (CFS)        (HR)
                              (CFS)
     196.      13.58                      40.         12.         11.         11.
                            (INCHES)     .530        .615        .615        .615
                             (AC-FT)      20.         23.         23.         23.

                             CUMULATIVE AREA =     .70 SQ MI

*** *** *** *** *** *** *** *** *** *** *** *** *** *** *** *** *** *** *** *** *** *** *** *** *** *** *** *** *** *** *** *** *** ***

              *************
              *           *
  98 KK       *   CB51C   *
              *           *
              *************
                               COMBINE ROUTED FLOW FROM COMPUTATION POINT CVR47C AND SUB-BASIN AVR51C
                               WITH RUNOFF FROM SUB-BASIN BR51C

 101 HC          HYDROGRAPH COMBINATION
                          ICOMP               3   NUMBER OF HYDROGRAPHS TO COMBINE
                                                                                   ***

     ***            ***             ***             ***             ***

                             HYDROGRAPH AT STATION     CB51C

 PEAK FLOW      TIME                                 MAXIMUM AVERAGE FLOW
                                         6-HR        24-HR       72-HR      24.92-HR
   (CFS)        (HR)
                              (CFS)
     278.      13.58                      92.         28.         27.         27.
                            (INCHES)     .464        .557        .557        .557
                             (AC-FT)      46.         55.         55.         55.

                             CUMULATIVE AREA =    1.85 SQ MI
```



```
*** *** *** *** *** *** *** *** *** *** *** *** *** *** *** *** *** *** *** *** *** *** *** *** *** *** *** *** *** *** *** *** *** ***

              *************
              *           *
 102 KK       *   DR43C   *
              *           *
              *************
                               SUB-BASIN DR43C
                               24-HOUR SCS TYPE II RAINFALL WAS USED TO FIND TC & R FOR THIS BASIN
                               THIS BASIN USED RAINFALL REDUCTION FACTOR OF  .934
                                 L = 1.49  Kb = .039  Adj. Slope =   69.0

                SUBBASIN RUNOFF DATA

 107 BA           SUBBASIN CHARACTERISTICS
                        TAREA           .92  SUBBASIN AREA

                  PRECIPITATION DATA

  32 PB                 STORM          3.92  BASIN TOTAL PRECIPITATION

  32 PI             INCREMENTAL PRECIPITATION PATTERN
                      .00        .00        .00        .00        .00        .00        .00        .00        .00        .00
                      .00        .00        .00        .00        .00        .00        .00        .00        .00        .00
                      .00        .00        .00        .00        .00        .00        .00        .00        .00        .00
                      .00        .00        .00        .00        .00        .00        .00        .00        .00        .00
                      .00        .00        .00        .00        .00        .00        .00        .00        .00        .00
                      .00        .00        .00        .00        .00        .00        .00        .00        .00        .00
                      .00        .00        .00        .00        .00        .00        .00        .00        .00        .00
                      .00        .00        .00        .00        .00        .00        .00        .00        .00        .00
                      .00        .00        .00        .00        .00        .00        .00        .00        .00        .00
                      .00        .00        .00        .00        .00        .00        .00        .00        .00        .00
                      .00        .00        .00        .00        .00        .00        .00        .00        .00        .00
                      .00        .00        .00        .00        .00        .00        .00        .00        .00        .00
                      .00        .00        .00        .00        .00        .00        .00        .01        .00        .01
                      .01        .01        .01        .01        .01        .01        .01        .01        .03        .03
                      .03        .09        .09        .09        .01        .01        .01        .01        .01        .01
                      .01        .01        .01        .01        .01        .01        .00        .00        .00        .00
                      .00        .00        .00        .00        .00        .00        .00        .00        .00        .00
                      .00        .00        .00        .00        .00        .00        .00        .00        .00        .00
                      .00        .00        .00        .00        .00        .00        .00        .00        .00        .00
                      .00        .00        .00        .00        .00        .00        .00        .00        .00        .00
                      .00        .00        .00        .00        .00        .00        .00        .00        .00        .00
                      .00        .00        .00        .00        .00        .00        .00        .00        .00        .00
                      .00        .00        .00        .00        .00        .00        .00        .00        .00        .00
                      .00        .00        .00        .00        .00        .00        .00        .00        .00        .00
                      .00        .00        .00        .00        .00        .00        .00        .00        .00        .00
                      .00        .00        .00        .00        .00        .00        .00        .00        .00        .00
                      .00        .00        .00        .00        .00        .00        .00        .00        .00        .00
                      .00        .00        .00        .00        .00        .00        .00        .00        .00        .00
                      .00        .00        .00        .00        .00        .00        .00        .00

 108 LG           GREEN AND AMPT LOSS RATE
                        STRTL           .25  STARTING LOSS
                          DTH           .25  MOISTURE DEFICIT
                         PSIF          5.10  WETTING FRONT SUCTION
                        XKSAT           .30  HYDRAULIC CONDUCTIVITY
                        RTIMP         38.00  PERCENT IMPERVIOUS AREA

 109 UC           CLARK UNITGRAPH
                           TC           .45  TIME OF CONCENTRATION
                            R           .22  STORAGE COEFFICIENT

 110 UA           ACCUMULATED-AREA VS. TIME,  11 ORDINATES
                          .0        5.0       16.0       30.0       65.0       77.0       84.0       90.0       94.0       97.0
                       100.0

                                                                      ***

                                                        UNIT HYDROGRAPH PARAMETERS
                                                   CLARK  TC=   .45 HR,         R=   .22 HR
                                                  SNYDER  TP=   .24 HR,        CP=   .54

                                                              UNIT HYDROGRAPH
                                                        17 END-OF-PERIOD ORDINATES
                 163.       732.      1255.      1276.      1062.       819.       583.       398.       271.       185.
                 126.        86.        58.        40.        27.        19.        13.

     ***            ***             ***             ***             ***

                             HYDROGRAPH AT STATION     DR43C

   TOTAL RAINFALL =     3.92, TOTAL LOSS =     1.70, TOTAL EXCESS =     2.22

 PEAK FLOW      TIME                                 MAXIMUM AVERAGE FLOW
                                         6-HR        24-HR       72-HR      24.92-HR
   (CFS)        (HR)
                              (CFS)
    1391.      12.17                     176.         55.         53.         53.
                            (INCHES)    1.779       2.209       2.212       2.212
                             (AC-FT)      87.        109.        109.        109.
```

CUMULATIVE AREA = .92 SQ MI

*** ***

```
              **************
              *            *
112 KK        *   DR43R    *
              *            *
              **************
                    DIVERT RETENTION VOLUME

  DT        DIVERSION
                 ISTAD      RET43C  DIVERSION HYDROGRAPH IDENTIFICATION
                DSTRMX       27.90  MAXIMUM VOLUME TO BE DIVERTED

  DI            INFLOW         .00   1000.00  10000.00

  DQ     DIVERTED FLOW         .00   1000.00  10000.00

                                                        ***
```

*** *** *** *** ***

DIVERSION HYDROGRAPH RET43C

PEAK FLOW	TIME		MAXIMUM AVERAGE FLOW			
			6-HR	24-HR	72-HR	24.92-HR
(CFS)	(HR)					
		(CFS)				
451.	11.92		45.	14.	14.	14.
		(INCHES)	.458	.567	.567	.567
		(AC-FT)	23.	28.	28.	28.

CUMULATIVE AREA = .92 SQ MI

*** *** *** *** ***

HYDROGRAPH AT STATION DR43R

PEAK FLOW	TIME		MAXIMUM AVERAGE FLOW			
			6-HR	24-HR	72-HR	24.92-HR
(CFS)	(HR)					
		(CFS)				
1391.	12.17		150.	41.	39.	39.
		(INCHES)	1.513	1.644	1.644	1.644
		(AC-FT)	74.	81.	81.	81.

CUMULATIVE AREA = .92 SQ MI

*** ***

```
              **************
              *            *
117 KK        *   ROA51A   *
              *            *
              **************
                    *************DOBBINS ROAD STORM DRAIN (43RD TO 47TH)***********************
                    ROUTE FLOW FROM DR43C WEST (1ST REACH) ALONG DOBBINS TO 47TH AVENUE

         HYDROGRAPH ROUTING DATA

120 RK        KINEMATIC WAVE STREAM ROUTING
                   L      2790.  CHANNEL LENGTH
                   S      .0042  SLOPE
                   N       .013  CHANNEL ROUGHNESS COEFFICIENT
                  CA        .00  CONTRIBUTING AREA
               SHAPE       CIRC  CHANNEL SHAPE
                  WD      16.00  BOTTOM WIDTH OR DIAMETER
                   Z        .00  SIDE SLOPE
              NDXMIN          2  MINIMUM NUMBER OF DX INTERVALS

                                      ***
                          COMPUTED KINEMATIC PARAMETERS
                               VARIABLE TIME STEP
                             (DT SHOWN IS A MINIMUM)
```

ELEMENT	ALPHA	M	DT (MIN)	DX (FT)	PEAK (CFS)	TIME TO PEAK (MIN)	VOLUME (IN)	MAXIMUM CELERITY (FPS)
MAIN	6.36	1.25	.73	930.00	1385.98	731.32	1.65	23.36

CONTINUITY SUMMARY (AC-FT) - INFLOW= .8086E EXCESS= .0000E OUTFLOW= .8091E BASIN STORAGE= .4091E-02 PERCENT ERROR= -.1

INTERPOLATED TO SPECIFIED COMPUTATION INTERVAL

MAIN	6.36	1.25	5.00		1375.80	730.00	1.65	

*** *** *** *** ***

HYDROGRAPH AT STATION ROA51A

PEAK FLOW	TIME		MAXIMUM AVERAGE FLOW			
			6-HR	24-HR	72-HR	24.92-HR
(CFS)	(HR)					
		(CFS)				
1376.	12.17		150.	41.	39.	39.
		(INCHES)	1.516	1.649	1.649	1.649
		(AC-FT)	75.	81.	81.	81.

CUMULATIVE AREA = .92 SQ MI

*** ***

```
              **************
              *            *
121 KK        *   ER47B    *
              *            *
              **************
                    SUB-BASIN ER47B
                    THIS SUB-BASIN SPLIT FROM OA51B TO ALLOW FOR DETENTION TO BE USED BELOW
                    THE WESTERN CANAL - ALT6A
                    24-HOUR SCS TYPE II RAINFALL WAS USED TO FIND TC & R FOR THIS BASIN
                    THIS BASIN USED RAINFALL REDUCTION FACTOR OF  .934
                      L = 1.26  Kb = .036  Adj. Slope =  254.0

         SUBBASIN RUNOFF DATA

128 BA        SUBBASIN CHARACTERISTICS
                 TAREA         .34  SUBBASIN AREA

              PRECIPITATION DATA

 32 PB           STORM        3.92  BASIN TOTAL PRECIPITATION

 32 PI         INCREMENTAL PRECIPITATION PATTERN
```

.00	.00	.00	.00	.00	.00	.00	.00	.00	.00
.00	.00	.00	.00	.00	.00	.00	.00	.00	.00
.00	.00	.00	.00	.00	.00	.00	.00	.00	.00
.00	.00	.00	.00	.00	.00	.00	.00	.00	.00
.00	.00	.00	.00	.00	.00	.00	.00	.00	.00
.00	.00	.00	.00	.00	.00	.00	.00	.00	.00
.00	.00	.00	.00	.00	.00	.00	.00	.00	.00
.00	.00	.00	.00	.00	.00	.00	.00	.00	.00
.00	.00	.00	.00	.00	.00	.00	.00	.00	.00
.00	.00	.00	.00	.00	.00	.00	.00	.00	.00
.00	.00	.00	.00	.00	.00	.00	.00	.00	.00
.00	.00	.00	.00	.00	.00	.00	.00	.00	.00
.00	.00	.00	.00	.00	.00	.00	.01	.00	.01
.01	.01	.01	.01	.01	.01	.01	.01	.03	.03
.03	.09	.09	.09	.01	.01	.01	.01	.01	.01
.01	.01	.01	.01	.01	.01	.00	.00	.00	.00
.00	.00	.00	.00	.00	.00	.00	.00	.00	.00
.00	.00	.00	.00	.00	.00	.00	.00	.00	.00
.00	.00	.00	.00	.00	.00	.00	.00	.00	.00
.00	.00	.00	.00	.00	.00	.00	.00	.00	.00
.00	.00	.00	.00	.00	.00	.00	.00	.00	.00
.00	.00	.00	.00	.00	.00	.00	.00	.00	.00
.00	.00	.00	.00	.00	.00	.00	.00	.00	.00
.00	.00	.00	.00	.00	.00	.00	.00	.00	.00
.00	.00	.00	.00	.00	.00	.00	.00	.00	.00
.00	.00	.00	.00	.00	.00	.00	.00	.00	.00
.00	.00	.00	.00	.00	.00	.00	.00	.00	.00
.00	.00	.00	.00	.00	.00	.00	.00	.00	.00
.00	.00	.00	.00	.00	.00	.00	.00		

```
129 LG        GREEN AND AMPT LOSS RATE
                 STRTL         .27  STARTING LOSS
                   DTH         .27  MOISTURE DEFICIT
                  PSIF        6.00  WETTING FRONT SUCTION
                XKSAT          .20  HYDRAULIC CONDUCTIVITY
                 RTIMP       30.00  PERCENT IMPERVIOUS AREA

130 UC        CLARK UNITGRAPH
                    TC         .23  TIME OF CONCENTRATION
                     R         .07  STORAGE COEFFICIENT

131 UA        ACCUMULATED-AREA VS. TIME,  11 ORDINATES
                    .0       5.0      16.0      30.0      65.0      77.0      84.0      90.0      94.0      97.0
                 100.0

                                                ***

                                    UNIT HYDROGRAPH PARAMETERS
                               CLARK   TC=   .23 HR,        R=   .07 HR
                              SNYDER   TP=   .13 HR,       CP=   .67
```

UNIT HYDROGRAPH
6 END-OF-PERIOD ORDINATES

476. 992. 750. 299. 83. 23.

*** *** *** *** ***

HYDROGRAPH AT STATION ER47B

TOTAL RAINFALL = 3.92, TOTAL LOSS = 1.85, TOTAL EXCESS = 2.07

PEAK FLOW	TIME		MAXIMUM AVERAGE FLOW			
			6-HR	24-HR	72-HR	24.92-HR
(CFS)	(HR)					
		(CFS)				
777.	12.00		63.	19.	18.	18.
		(INCHES)	1.722	2.063	2.064	2.064
		(AC-FT)	31.	37.	37.	37.

CUMULATIVE AREA = .34 SQ MI

*** ***

```
              **************
              *            *
133 KK        *   ERBASN   *
              *            *
              **************
```

**************PROPOSED BASIN NEAR 47TH AVENUE AND OLNEY AVENUE**************
DETENTION BASIN AT THE ELLIOT AND 47TH AVE INTERSECTION. THE WESTERN CANAL
IS USED AS A COLLECTOR FACILITY AND OUTLETS TO THIS DETENTION BASIN. THE
BASIN HAS 10 AC TOP, 3.8 AC BOTTOM AND IS 6 FT DEEP WITH 5:1 SIDE SLOPES

```
138 KO        OUTPUT CONTROL VARIABLES
                    IPRNT          1  PRINT CONTROL
                    IPLOT          0  PLOT CONTROL
                    QSCAL         0.  HYDROGRAPH PLOT SCALE

           HYDROGRAPH ROUTING DATA

139 RS        STORAGE ROUTING
                    NSTPS          1  NUMBER OF SUBREACHES
                     ITYP       ELEV  TYPE OF INITIAL CONDITION
                   RSVRIC        .00  INITIAL CONDITION
                        X        .00 WORKING R AND D COEFFICIENT
```

140 SA	AREA	3.8	4.8	5.9	6.9	7.9	9.0	10.0
141 SQ	DISCHARGE	0.	20.	20.	20.	20.	20.	20.
142 SE	ELEVATION	.00	1.00	2.00	3.00	4.00	5.00	6.00

***

COMPUTED STORAGE-ELEVATION DATA

STORAGE	.00	4.29	9.63	16.02	23.42	31.86	41.36
ELEVATION	.00	1.00	2.00	3.00	4.00	5.00	6.00

HYDROGRAPH AT STATION ERBASN

DA	MON	HRMN	ORD	OUTFLOW	STORAGE	STAGE	DA	MON	HRMN	ORD	OUTFLOW	STORAGE	STAGE	DA	MON	HRMN	ORD	OUTFLOW	STORAGE	STAGE
1		0000	1	0.	.0	.0	1		0820	101	4.	1.0	.2	1		1640	201	20.	23.4	4.0
1		0005	2	0.	.0	.0	1		0825	102	5.	1.0	.2	1		1645	202	20.	23.3	4.0
1		0010	3	0.	.0	.0	1		0830	103	5.	1.0	.2	1		1650	203	20.	23.2	4.0
1		0015	4	0.	.0	.0	1		0835	104	5.	1.0	.2	1		1655	204	20.	23.0	3.9
1		0020	5	0.	.0	.0	1		0840	105	5.	1.0	.2	1		1700	205	20.	22.9	3.9
1		0025	6	0.	.0	.0	1		0845	106	5.	1.0	.2	1		1705	206	20.	22.8	3.9
1		0030	7	0.	.1	.0	1		0850	107	5.	1.1	.2	1		1710	207	20.	22.7	3.9
1		0035	8	0.	.1	.0	1		0855	108	5.	1.1	.2	1		1715	208	20.	22.6	3.9
1		0040	9	0.	.1	.0	1		0900	109	5.	1.1	.3	1		1720	209	20.	22.5	3.9
1		0045	10	1.	.1	.0	1		0905	110	5.	1.1	.3	1		1725	210	20.	22.4	3.9
1		0050	11	1.	.1	.0	1		0910	111	5.	1.1	.3	1		1730	211	20.	22.3	3.9
1		0055	12	1.	.1	.0	1		0915	112	5.	1.1	.3	1		1735	212	20.	22.2	3.8
1		0100	13	1.	.2	.0	1		0920	113	5.	1.2	.3	1		1740	213	20.	22.1	3.8
1		0105	14	1.	.2	.0	1		0925	114	5.	1.2	.3	1		1745	214	20.	22.0	3.8
1		0110	15	1.	.2	.0	1		0930	115	6.	1.2	.3	1		1750	215	20.	21.9	3.8
1		0115	16	1.	.2	.0	1		0935	116	6.	1.2	.3	1		1755	216	20.	21.8	3.8
1		0120	17	1.	.2	.1	1		0940	117	6.	1.2	.3	1		1800	217	20.	21.7	3.8
1		0125	18	1.	.2	.1	1		0945	118	6.	1.3	.3	1		1805	218	20.	21.6	3.8
1		0130	19	1.	.3	.1	1		0950	119	6.	1.3	.3	1		1810	219	20.	21.5	3.7
1		0135	20	1.	.3	.1	1		0955	120	6.	1.3	.3	1		1815	220	20.	21.4	3.7
1		0140	21	1.	.3	.1	1		1000	121	6.	1.3	.3	1		1820	221	20.	21.3	3.7
1		0145	22	1.	.3	.1	1		1005	122	6.	1.3	.3	1		1825	222	20.	21.2	3.7
1		0150	23	1.	.3	.1	1		1010	123	6.	1.4	.3	1		1830	223	20.	21.1	3.7
1		0155	24	1.	.3	.1	1		1015	124	6.	1.4	.3	1		1835	224	20.	20.9	3.7
1		0200	25	2.	.3	.1	1		1020	125	7.	1.4	.3	1		1840	225	20.	20.8	3.7

1		0205	26	2.	.3	.1	1		1025	126	7.	1.4	.3	1		1845	226	20.	20.7	3.6
1		0210	27	2.	.3	.1	1		1030	127	7.	1.5	.3	1		1850	227	20.	20.6	3.6
1		0215	28	2.	.4	.1	1		1035	128	7.	1.5	.4	1		1855	228	20.	20.5	3.6
1		0220	29	2.	.4	.1	1		1040	129	7.	1.6	.4	1		1900	229	20.	20.4	3.6
1		0225	30	2.	.4	.1	1		1045	130	7.	1.6	.4	1		1905	230	20.	20.3	3.6
1		0230	31	2.	.4	.1	1		1050	131	8.	1.7	.4	1		1910	231	20.	20.2	3.6
1		0235	32	2.	.4	.1	1		1055	132	8.	1.7	.4	1		1915	232	20.	20.1	3.5
1		0240	33	2.	.4	.1	1		1100	133	8.	1.8	.4	1		1920	233	20.	20.0	3.5
1		0245	34	2.	.4	.1	1		1105	134	9.	1.9	.4	1		1925	234	20.	19.9	3.5
1		0250	35	2.	.4	.1	1		1110	135	9.	1.9	.4	1		1930	235	20.	19.7	3.5
1		0255	36	2.	.4	.1	1		1115	136	9.	2.0	.5	1		1935	236	20.	19.6	3.5
1		0300	37	2.	.4	.1	1		1120	137	10.	2.1	.5	1		1940	237	20.	19.5	3.5
1		0305	38	2.	.4	.1	1		1125	138	10.	2.2	.5	1		1945	238	20.	19.4	3.5
1		0310	39	2.	.4	.1	1		1130	139	11.	2.3	.5	1		1950	239	20.	19.3	3.4
1		0315	40	2.	.5	.1	1		1135	140	12.	2.5	.6	1		1955	240	20.	19.2	3.4
1		0320	41	2.	.5	.1	1		1140	141	15.	3.3	.8	1		2000	241	20.	19.1	3.4
1		0325	42	2.	.5	.1	1		1145	142	20.	4.5	1.0	1		2005	242	20.	19.0	3.4
1		0330	43	2.	.5	.1	1		1150	143	20.	6.4	1.4	1		2010	243	20.	18.8	3.4
1		0335	44	2.	.5	.1	1		1155	144	20.	9.7	2.0	1		2015	244	20.	18.7	3.4
1		0340	45	2.	.5	.1	1		1200	145	20.	14.3	2.7	1		2020	245	20.	18.6	3.4
1		0345	46	2.	.5	.1	1		1205	146	20.	19.2	3.4	1		2025	246	20.	18.5	3.3
1		0350	47	2.	.5	.1	1		1210	147	20.	22.9	3.9	1		2030	247	20.	18.4	3.3
1		0355	48	2.	.5	.1	1		1215	148	20.	24.9	4.2	1		2035	248	20.	18.3	3.3
1		0400	49	2.	.5	.1	1		1220	149	20.	25.8	4.3	1		2040	249	20.	18.1	3.3
1		0405	50	2.	.5	.1	1		1225	150	20.	26.3	4.3	1		2045	250	20.	18.0	3.3
1		0410	51	2.	.5	.1	1		1230	151	20.	26.4	4.4	1		2050	251	20.	17.9	3.3
1		0415	52	3.	.5	.1	1		1235	152	20.	26.5	4.4	1		2055	252	20.	17.8	3.2
1		0420	53	3.	.6	.1	1		1240	153	20.	26.6	4.4	1		2100	253	20.	17.7	3.2
1		0425	54	3.	.6	.1	1		1245	154	20.	26.6	4.4	1		2105	254	20.	17.6	3.2
1		0430	55	3.	.6	.1	1		1250	155	20.	26.7	4.4	1		2110	255	20.	17.4	3.2
1		0435	56	3.	.6	.1	1		1255	156	20.	26.7	4.4	1		2115	256	20.	17.3	3.2
1		0440	57	3.	.6	.1	1		1300	157	20.	26.7	4.4	1		2120	257	20.	17.2	3.2
1		0445	58	3.	.6	.1	1		1305	158	20.	26.7	4.4	1		2125	258	20.	17.1	3.1
1		0450	59	3.	.6	.1	1		1310	159	20.	26.6	4.4	1		2130	259	20.	17.0	3.1
1		0455	60	3.	.6	.1	1		1315	160	20.	26.6	4.4	1		2135	260	20.	16.9	3.1
1		0500	61	3.	.6	.1	1		1320	161	20.	26.6	4.4	1		2140	261	20.	16.7	3.1
1		0505	62	3.	.6	.1	1		1325	162	20.	26.6	4.4	1		2145	262	20.	16.6	3.1
1		0510	63	3.	.6	.2	1		1330	163	20.	26.5	4.4	1		2150	263	20.	16.5	3.1
1		0515	64	3.	.7	.2	1		1335	164	20.	26.5	4.4	1		2155	264	20.	16.4	3.1
1		0520	65	3.	.7	.2	1		1340	165	20.	26.4	4.4	1		2200	265	20.	16.3	3.0
1		0525	66	3.	.7	.2	1		1345	166	20.	26.4	4.3	1		2205	266	20.	16.2	3.0
1		0530	67	3.	.7	.2	1		1350	167	20.	26.3	4.3	1		2210	267	20.	16.1	3.0
1		0535	68	3.	.7	.2	1		1355	168	20.	26.2	4.3	1		2215	268	20.	15.9	3.0
1		0540	69	3.	.7	.2	1		1400	169	20.	26.2	4.3	1		2220	269	20.	15.8	3.0
1		0545	70	3.	.7	.2	1		1405	170	20.	26.1	4.3	1		2225	270	20.	15.7	2.9
1		0550	71	3.	.7	.2	1		1410	171	20.	26.0	4.3	1		2230	271	20.	15.6	2.9
1		0555	72	3.	.7	.2	1		1415	172	20.	26.0	4.3	1		2235	272	20.	15.5	2.9
1		0600	73	3.	.7	.2	1		1420	173	20.	25.9	4.3	1		2240	273	20.	15.4	2.9
1		0605	74	3.	.7	.2	1		1425	174	20.	25.8	4.3	1		2245	274	20.	15.2	2.9
1		0610	75	3.	.7	.2	1		1430	175	20.	25.7	4.3	1		2250	275	20.	15.1	2.9
1		0615	76	3.	.7	.2	1		1435	176	20.	25.7	4.3	1		2255	276	20.	15.0	2.8
1		0620	77	3.	.7	.2	1		1440	177	20.	25.6	4.3	1		2300	277	20.	14.9	2.8
1		0625	78	4.	.8	.2	1		1445	178	20.	25.5	4.2	1		2305	278	20.	14.8	2.8
1		0630	79	4.	.8	.2	1		1450	179	20.	25.4	4.2	1		2310	279	20.	14.7	2.8
1		0635	80	4.	.8	.2	1		1455	180	20.	25.3	4.2	1		2315	280	20.	14.5	2.8
1		0640	81	4.	.8	.2	1		1500	181	20.	25.2	4.2	1		2320	281	20.	14.4	2.7
1		0645	82	4.	.8	.2	1		1505	182	20.	25.1	4.2	1		2325	282	20.	14.3	2.7
1		0650	83	4.	.8	.2	1		1510	183	20.	25.0	4.2	1		2330	283	20.	14.2	2.7
1		0655	84	4.	.8	.2	1		1515	184	20.	25.0	4.2	1		2335	284	20.	14.1	2.7
1		0700	85	4.	.8	.2	1		1520	185	20.	24.9	4.2	1		2340	285	20.	14.0	2.7
1		0705	86	4.	.8	.2	1		1525	186	20.	24.8	4.2	1		2345	286	20.	13.8	2.7
1		0710	87	4.	.8	.2	1		1530	187	20.	24.7	4.2	1		2350	287	20.	13.7	2.6
1		0715	88	4.	.9	.2	1		1535	188	20.	24.6	4.1	1		2355	288	20.	13.6	2.6
1		0720	89	4.	.9	.2	1		1540	189	20.	24.5	4.1	2		0000	289	20.	13.5	2.6
1		0725	90	4.	.9	.2	1		1545	190	20.	24.4	4.1	2		0005	290	20.	13.4	2.6
1		0730	91	4.	.9	.2	1		1550	191	20.	24.3	4.1	2		0010	291	20.	13.2	2.6
1		0735	92	4.	.9	.2	1		1555	192	20.	24.2	4.1	2		0015	292	20.	13.1	2.5
1		0740	93	4.	.9	.2	1		1600	193	20.	24.1	4.1	2		0020	293	20.	13.0	2.5
1		0745	94	4.	.9	.2	1		1605	194	20.	24.0	4.1	2		0025	294	20.	12.8	2.5
1		0750	95	4.	.9	.2	1		1610	195	20.	23.9	4.1	2		0030	295	20.	12.7	2.5
1		0755	96	4.	.9	.2	1		1615	196	20.	23.8	4.0	2		0035	296	20.	12.5	2.5
1		0800	97	4.	.9	.2	1		1620	197	20.	23.7	4.0	2		0040	297	20.	12.4	2.4
1		0805	98	4.	.9	.2	1		1625	198	20.	23.6	4.0	2		0045	298	20.	12.3	2.4
1		0810	99	4.	.9	.2	1		1630	199	20.	23.5	4.0	2		0050	299	20.	12.1	2.4
1		0815	100	4.	.9	.2	1		1635	200	20.	23.5	4.0	2		0055	300	20.	12.0	2.4

PEAK FLOW	TIME		MAXIMUM AVERAGE FLOW			
			6-HR	24-HR	72-HR	24.92-HR
(CFS)	(HR)					
		(CFS)				
20.	11.75		20.	13.	12.	12.
		(INCHES)	.547	1.401	1.402	1.402
		(AC-FT)	10.	25.	25.	25.

PEAK STORAGE	TIME	MAXIMUM AVERAGE STORAGE			
		6-HR	24-HR	72-HR	24.92-HR
(AC-FT)	(HR)				
27.	12.92	25.	12.	11.	11.

PEAK STAGE	TIME	MAXIMUM AVERAGE STAGE			
		6-HR	24-HR	72-HR	24.92-HR
(FEET)	(HR)				
4.39	13.00	4.15	2.04	1.97	1.97

```
                    CUMULATIVE AREA =     .34 SQ MI


*** *** *** *** *** *** *** *** *** *** *** *** *** *** *** *** *** *** *** *** *** *** *** *** *** *** *** *** *** *** *** *** *** *** ***

          **************
          *            *
143 KK    *    RER47B  *
          *            *
          **************
                      ************47TH AVENUE STORM DRAIN (OLNEY TO ELLIOT)**********************
                      ROUTE THE OUTFLOW FROM THE ELLIOT ROAD BASIN FROM ELLIOT ROAD TO DOBBINS ROAD

               HYDROGRAPH ROUTING DATA

146 RK           KINEMATIC WAVE STREAM ROUTING
                          L       4029.  CHANNEL LENGTH
                          S       .0034  SLOPE
                          N        .013  CHANNEL ROUGHNESS COEFFICIENT
                         CA         .00  CONTRIBUTING AREA
                      SHAPE        CIRC  CHANNEL SHAPE
                         WD        2.00  BOTTOM WIDTH OR DIAMETER
                          Z         .00  SIDE SLOPE
                     NDXMIN           2  MINIMUM NUMBER OF DX INTERVALS
                                                  ***
                                    COMPUTED KINEMATIC PARAMETERS
                                       VARIABLE TIME STEP
                                    (DT SHOWN IS A MINIMUM)

                      ELEMENT    ALPHA       M         DT        DX       PEAK    TIME TO      VOLUME    MAXIMUM
                                                                                      PEAK                CELERITY
                                                      (MIN)      (FT)     (CFS)     (MIN)        (IN)      (FPS)

                      MAIN          4.05      1.25       3.21   1343.00     20.03   1496.37        1.39      6.96

CONTINUITY SUMMARY (AC-FT) - INFLOW= .2543E  EXCESS= .0000E OUTFLOW= .2524E BASIN STORAGE= .1999E PERCENT ERROR=    -.1

                                    INTERPOLATED TO SPECIFIED COMPUTATION INTERVAL

                      MAIN          4.05      1.25       5.00                20.02   1495.00        1.39

     ***           ***           ***           ***           ***

                                    HYDROGRAPH AT STATION   RER47B

PEAK FLOW     TIME                                  MAXIMUM AVERAGE FLOW
                                        6-HR        24-HR       72-HR      24.92-HR
 (CFS)        (HR)
                    (CFS)
   20.       24.92              20.         13.         12.         12.
                   (INCHES)     .547       1.390       1.390       1.390
                   (AC-FT)       10.         25.         25.         25.

                   CUMULATIVE AREA =     .34 SQ MI


*** *** *** *** *** *** *** *** *** *** *** *** *** *** *** *** *** *** *** *** *** *** *** *** *** *** *** *** *** *** *** *** *** *** ***

          **************
          *            *
147 KK    *    CER47B  *
          *            *
          **************
                      COMBINE FLOWS FROM 47TH AND ELLIOT BASIN WITH FLOWS FROM CR43C

149 HC           HYDROGRAPH COMBINATION
                      ICOMP           2  NUMBER OF HYDROGRAPHS TO COMBINE
                                                  ***
     ***           ***           ***           ***           ***

                                    HYDROGRAPH AT STATION   CER47B

PEAK FLOW     TIME                                  MAXIMUM AVERAGE FLOW
                                        6-HR        24-HR       72-HR      24.92-HR
 (CFS)        (HR)
                    (CFS)
 1396.       12.17             170.         54.         52.         52.
                   (INCHES)    1.255       1.579       1.579       1.579
                   (AC-FT)       84.        106.        106.        106.

                   CUMULATIVE AREA =    1.26 SQ MI
```



```
*** *** *** *** *** *** *** *** *** *** *** *** *** *** *** *** *** *** *** *** *** *** *** *** *** *** *** *** *** *** *** *** *** *** ***

          **************
          *            *
150 KK    *    ROA51B  *
          *            *
          **************
                      **********DOBBINS ROAD STORM DRAIN 47TH TO 51ST AVENUES**********************
                      ROUTE FLOWS WEST ALONG DOBBINS TO 51ST AVE
                      CROSS-SECTION REVISED TO REFLECT TO USE STORM DRAIN

               HYDROGRAPH ROUTING DATA

154 RK           KINEMATIC WAVE STREAM ROUTING
                          L       2640.  CHANNEL LENGTH
                          S       .0033  SLOPE
                          N        .013  CHANNEL ROUGHNESS COEFFICIENT
                         CA         .00  CONTRIBUTING AREA
                      SHAPE        CIRC  CHANNEL SHAPE
                         WD       16.00  BOTTOM WIDTH OR DIAMETER
                          Z         .00  SIDE SLOPE
                     NDXMIN           2  MINIMUM NUMBER OF DX INTERVALS
                                                  ***
                                    COMPUTED KINEMATIC PARAMETERS
                                       VARIABLE TIME STEP
                                    (DT SHOWN IS A MINIMUM)

                      ELEMENT    ALPHA       M         DT        DX       PEAK    TIME TO      VOLUME    MAXIMUM
                                                                                      PEAK                CELERITY
                                                      (MIN)      (FT)     (CFS)     (MIN)        (IN)      (FPS)

                      MAIN          5.64      1.25        .75    880.00  1391.42   731.41        1.58     21.23

CONTINUITY SUMMARY (AC-FT) - INFLOW= .1063E  EXCESS= .0000E OUTFLOW= .1062E BASIN STORAGE= .9683E-01 PERCENT ERROR=     .0

                                    INTERPOLATED TO SPECIFIED COMPUTATION INTERVAL

                      MAIN          5.64      1.25       5.00                1362.31   730.00        1.58

     ***           ***           ***           ***           ***

                                    HYDROGRAPH AT STATION   ROA51B

PEAK FLOW     TIME                                  MAXIMUM AVERAGE FLOW
                                        6-HR        24-HR       72-HR      24.92-HR
 (CFS)        (HR)
                    (CFS)
 1362.       12.17             171.         54.         52.         52.
                   (INCHES)    1.256       1.580       1.580       1.580
                   (AC-FT)       85.        106.        106.        106.

                   CUMULATIVE AREA =    1.26 SQ MI


*** *** *** *** *** *** *** *** *** *** *** *** *** *** *** *** *** *** *** *** *** *** *** *** *** *** *** *** *** *** *** *** *** *** ***

          **************
          *            *
155 KK    *     OA51B  *
          *            *
          **************
                      SUB-BASIN OA51B
                      24-HOUR SCS TYPE II RAINFALL WAS USED TO FIND TC & R FOR THIS BASIN
                      THIS BASIN USED RAINFALL REDUCTION FACTOR OF  .934
                        L = 1.26  Kb = .036  Adj. Slope =  254.0

               SUBBASIN RUNOFF DATA

160 BA           SUBBASIN CHARACTERISTICS
                      TAREA        1.03  SUBBASIN AREA

               PRECIPITATION DATA

 32 PB                STORM        3.92  BASIN TOTAL PRECIPITATION

 32 PI          INCREMENTAL PRECIPITATION PATTERN
                    .00       .00       .00       .00       .00       .00       .00       .00       .00       .00
                    .00       .00       .00       .00       .00       .00       .00       .00       .00       .00
                    .00       .00       .00       .00       .00       .00       .00       .00       .00       .00
                    .00       .00       .00       .00       .00       .00       .00       .00       .00       .00
                    .00       .00       .00       .00       .00       .00       .00       .00       .00       .00
                    .00       .00       .00       .00       .00       .00       .00       .00       .00       .00
                    .00       .00       .00       .00       .00       .00       .00       .00       .00       .00
                    .00       .00       .00       .00       .00       .00       .00       .00       .00       .00
                    .00       .00       .00       .00       .00       .00       .00       .00       .00       .00
                    .00       .00       .00       .00       .00       .00       .00       .00       .00       .00
```

```
           .00      .00      .00      .00      .00      .00      .00      .00      .00      .00
           .00      .00      .00      .00      .00      .00      .00      .01      .00      .01
           .01      .01      .01      .01      .01      .01      .01      .01      .03      .03
           .03      .09      .09      .09      .01      .01      .01      .01      .01      .01
           .01      .01      .01      .01      .01      .01      .00      .00      .00      .00
           .00      .00      .00      .00      .00      .00      .00      .00      .00      .00
           .00      .00      .00      .00      .00      .00      .00      .00      .00      .00
           .00      .00      .00      .00      .00      .00      .00      .00      .00      .00
           .00      .00      .00      .00      .00      .00      .00      .00      .00      .00
           .00      .00      .00      .00      .00      .00      .00      .00      .00      .00
           .00      .00      .00      .00      .00      .00      .00      .00      .00      .00
           .00      .00      .00      .00      .00      .00      .00      .00      .00      .00
           .00      .00      .00      .00      .00      .00      .00      .00      .00      .00
           .00      .00      .00      .00      .00      .00      .00      .00      .00      .00
           .00      .00      .00      .00      .00      .00      .00      .00      .00      .00
           .00      .00      .00      .00      .00      .00      .00      .00      .00      .00
           .00      .00      .00      .00      .00      .00      .00      .00      .00      .00
           .00      .00      .00      .00      .00      .00      .00      .00

161 LG        GREEN AND AMPT LOSS RATE
                   STRTL          .27  STARTING LOSS
                     DTH          .27  MOISTURE DEFICIT
                    PSIF         6.00  WETTING FRONT SUCTION
                   XKSAT          .20  HYDRAULIC CONDUCTIVITY
                   RTIMP        30.00  PERCENT IMPERVIOUS AREA

162 UC        CLARK UNITGRAPH
                      TC          .23  TIME OF CONCENTRATION
                       R          .07  STORAGE COEFFICIENT

163 UA        ACCUMULATED-AREA VS. TIME,  11 ORDINATES
                 .0      5.0     16.0     30.0     65.0     77.0     84.0     90.0     94.0     97.0
              100.0

                                                ***

                                     UNIT HYDROGRAPH PARAMETERS
                               CLARK   TC=   .23 HR,        R=   .07 HR
                              SNYDER   TP=   .13 HR,       CP=   .67

                                            UNIT HYDROGRAPH
                                       6 END-OF-PERIOD ORDINATES
           1442.     3007.     2272.      905.      253.       71.

     ***              ***              ***              ***              ***

                        HYDROGRAPH AT STATION     OA51B

  TOTAL RAINFALL =     3.92, TOTAL LOSS =     1.85, TOTAL EXCESS =     2.07

PEAK FLOW      TIME                            MAXIMUM AVERAGE FLOW
                                     6-HR          24-HR         72-HR       24.92-HR
  (CFS)        (HR)
                            (CFS)
  2353.       12.00                  191.           57.           55.           55.
                          (INCHES)  1.722         2.063         2.064         2.064
                          (AC-FT)     95.          113.          113.          113.

                        CUMULATIVE AREA =     1.03 SQ MI


*** *** *** *** *** *** *** *** *** *** *** *** *** *** *** *** *** *** *** *** *** *** *** *** *** *** *** *** *** *** *** *** *** 

          **************
          *            *
165 KK    *    OA51R   *
          *            *
          **************
                        DIVERT RETENTION VOLUME

 DT           DIVERSION
                     ISTAD       RET51  DIVERSION HYDROGRAPH IDENTIFICATION
                    DSTRMX       80.90  MAXIMUM VOLUME TO BE DIVERTED

 DI               INFLOW           .00    1000.00   10000.00

 DQ         DIVERTED FLOW          .00    1000.00   10000.00
                                                ***

     ***              ***              ***              ***              ***

                        DIVERSION HYDROGRAPH     RET51

PEAK FLOW      TIME                            MAXIMUM AVERAGE FLOW
                                     6-HR          24-HR         72-HR       24.92-HR
  (CFS)        (HR)
                            (CFS)
  2353.       12.00                  153.           41.           39.           39.
                          (INCHES)  1.377         1.473         1.473         1.473
                          (AC-FT)     76.           81.           81.           81.

                        CUMULATIVE AREA =     1.03 SQ MI
```



```
     ***              ***              ***              ***              ***

                        HYDROGRAPH AT STATION     OA51R

PEAK FLOW      TIME                            MAXIMUM AVERAGE FLOW
                                     6-HR          24-HR         72-HR       24.92-HR
  (CFS)        (HR)
                            (CFS)
   900.       12.17                   55.           16.           16.           16.
                          (INCHES)   .498          .591          .591          .591
                          (AC-FT)     27.           32.           32.           32.

                        CUMULATIVE AREA =     1.03 SQ MI


*** *** *** *** *** *** *** *** *** *** *** *** *** *** *** *** *** *** *** *** *** *** *** *** *** *** *** *** *** *** *** *** *** *** 

          **************
          *            *
170 KK    *    CDR51   *
          *            *
          **************
                 COMBINE ROUTED SPLIT FLOW FROM SUB-BASIN DR43C TO RUNOFF FROM SUB-BASIN
                 OA51B - THIS COMBINATION NOW AT DOBBINS ROAD AND 51ST AVE

173 HC        HYDROGRAPH COMBINATION
                   ICOMP            2  NUMBER OF HYDROGRAPHS TO COMBINE
                                                ***

     ***              ***              ***              ***              ***

                        HYDROGRAPH AT STATION     CDR51

PEAK FLOW      TIME                            MAXIMUM AVERAGE FLOW
                                     6-HR          24-HR         72-HR       24.92-HR
  (CFS)        (HR)
                            (CFS)
  2262.       12.17                  225.           70.           67.           67.
                          (INCHES)   .913         1.136         1.136         1.136
                          (AC-FT)    112.          139.          139.          139.

                        CUMULATIVE AREA =     2.29 SQ MI


*** *** *** *** *** *** *** *** *** *** *** *** *** *** *** *** *** *** *** *** *** *** *** *** *** *** *** *** *** *** *** *** *** *** 

          **************
          *            *
174 KK    *    RDR51   *
          *            *
          **************
                 **********51ST AVENUE STORM DRAIN (DOBBINS TO BASELINE)**********************
                 ROUTE FLOWS NORTH ALONG 51ST AVENEUE  BASELINE AVENUE
                 CROSS-SECTION REVISED TO REFLECT TO USE STORM DRAIN

          HYDROGRAPH ROUTING DATA

178 RK        KINEMATIC WAVE STREAM ROUTING
                       L        5280.  CHANNEL LENGTH
                       S        .0053  SLOPE
                       N         .013  CHANNEL ROUGHNESS COEFFICIENT
                      CA          .00  CONTRIBUTING AREA
                   SHAPE         TRAP  CHANNEL SHAPE
                      WD        16.00  BOTTOM WIDTH OR DIAMETER
                       Z          .00  SIDE SLOPE
                  NDXMIN            2  MINIMUM NUMBER OF DX INTERVALS

                                                ***
                                  COMPUTED KINEMATIC PARAMETERS
                                       VARIABLE TIME STEP
                                     (DT SHOWN IS A MINIMUM)

           ELEMENT    ALPHA       M         DT         DX       PEAK    TIME TO    VOLUME   MAXIMUM
                                                                          PEAK              CELERITY
                                           (MIN)       (FT)     (CFS)    (MIN)      (IN)     (FPS)

           MAIN        1.31     1.67        .75    1760.00   2247.80    731.59      1.13     43.14

CONTINUITY SUMMARY (AC-FT) - INFLOW= .1388E  EXCESS= .0000E OUTFLOW= .1386E BASIN STORAGE= .4037E PERCENT ERROR=   -.1

                                 INTERPOLATED TO SPECIFIED COMPUTATION INTERVAL

           MAIN        1.31     1.67       5.00              2021.31    735.00      1.13
```

*** *** *** *** ***

HYDROGRAPH AT STATION RDR51

PEAK FLOW	TIME		6-HR	MAXIMUM AVERAGE FLOW 24-HR	72-HR	24.92-HR
(CFS)	(HR)					
		(CFS)				
2021.	12.25		225.	70.	67.	67.
		(INCHES)	.911	1.132	1.132	1.132
		(AC-FT)	111.	138.	138.	138.

CUMULATIVE AREA = 2.29 SQ MI

*** ***

```
              **************
              *            *
179 KK        *   BRBASN   *
              *            *
              **************
                    *************PROPOSED BASIN AT BASELINE ROAD AND 51ST AVNEUE****************
                    DETENTION BASIN AT THE BASELINE AND 51ST AVE INTERSECTION.

                    BASIN HAS 25 AC TOP, 3.26 AC BOTTOM AND IS 97 FT DEEP WITH 5:1 SIDE SLOPES

184 KO          OUTPUT CONTROL VARIABLES
                      IPRNT          1  PRINT CONTROL
                      IPLOT          0  PLOT CONTROL
                      QSCAL          0.  HYDROGRAPH PLOT SCALE

              HYDROGRAPH ROUTING DATA

185 RS          STORAGE ROUTING
                      NSTPS          1  NUMBER OF SUBREACHES
                       ITYP       ELEV  TYPE OF INITIAL CONDITION
                     RSVRIC        .00  INITIAL CONDITION
                          X        .00 WORKING R AND D COEFFICIENT
```

186 SA	AREA	3.3	5.7	8.1	10.5	12.9	15.3	17.7	20.2	22.6	25.0
187 SQ	DISCHARGE	0.	50.	50.	50.	50.	50.	50.	50.	50.	50.
188 SE	ELEVATION	.00	1.00	2.00	3.00	4.00	5.00	6.00	7.00	8.00	9.00

***

COMPUTED STORAGE-ELEVATION DATA

STORAGE	.00	4.42	11.29	20.56	32.24	46.32	62.81	81.75	103.14	126.93
ELEVATION	.00	1.00	2.00	3.00	4.00	5.00	6.00	7.00	8.00	9.00

HYDROGRAPH AT STATION BRBASN

DA	MON	HRMN	ORD	OUTFLOW	STORAGE	STAGE	DA	MON	HRMN	ORD	OUTFLOW	STORAGE	STAGE	DA	MON	HRMN	ORD	OUTFLOW	STORAGE	STAGE
1		0000	1	0.	.0	.0	1		0820	101	4.	.3	.1	1		1640	201	50.	87.2	7.3
1		0005	2	0.	.0	.0	1		0825	102	4.	.3	.1	1		1645	202	50.	87.3	7.3
1		0010	3	0.	.0	.0	1		0830	103	4.	.3	.1	1		1650	203	50.	87.3	7.3
1		0015	4	0.	.0	.0	1		0835	104	4.	.3	.1	1		1655	204	50.	87.4	7.3
1		0020	5	0.	.0	.0	1		0840	105	4.	.3	.1	1		1700	205	50.	87.4	7.3
1		0025	6	0.	.0	.0	1		0845	106	4.	.3	.1	1		1705	206	50.	87.4	7.3
1		0030	7	0.	.0	.0	1		0850	107	4.	.3	.1	1		1710	207	50.	87.5	7.3
1		0035	8	0.	.0	.0	1		0855	108	4.	.4	.1	1		1715	208	50.	87.5	7.3
1		0040	9	0.	.0	.0	1		0900	109	4.	.4	.1	1		1720	209	50.	87.5	7.3
1		0045	10	0.	.0	.0	1		0905	110	4.	.4	.1	1		1725	210	50.	87.5	7.3
1		0050	11	0.	.0	.0	1		0910	111	4.	.4	.1	1		1730	211	50.	87.6	7.3
1		0055	12	0.	.0	.0	1		0915	112	4.	.4	.1	1		1735	212	50.	87.6	7.3
1		0100	13	0.	.0	.0	1		0920	113	4.	.4	.1	1		1740	213	50.	87.6	7.3
1		0105	14	0.	.0	.0	1		0925	114	4.	.4	.1	1		1745	214	50.	87.6	7.3
1		0110	15	0.	.0	.0	1		0930	115	4.	.4	.1	1		1750	215	50.	87.7	7.3
1		0115	16	0.	.0	.0	1		0935	116	4.	.4	.1	1		1755	216	50.	87.7	7.3
1		0120	17	0.	.0	.0	1		0940	117	4.	.4	.1	1		1800	217	50.	87.7	7.3
1		0125	18	0.	.0	.0	1		0945	118	5.	.4	.1	1		1805	218	50.	87.7	7.3
1		0130	19	0.	.0	.0	1		0950	119	5.	.4	.1	1		1810	219	50.	87.7	7.3
1		0135	20	0.	.0	.0	1		0955	120	5.	.4	.1	1		1815	220	50.	87.7	7.3
1		0140	21	0.	.0	.0	1		1000	121	5.	.4	.1	1		1820	221	50.	87.7	7.3
1		0145	22	0.	.0	.0	1		1005	122	5.	.4	.1	1		1825	222	50.	87.7	7.3
1		0150	23	0.	.0	.0	1		1010	123	5.	.4	.1	1		1830	223	50.	87.7	7.3
1		0155	24	0.	.0	.0	1		1015	124	5.	.4	.1	1		1835	224	50.	87.6	7.3
1		0200	25	0.	.0	.0	1		1020	125	5.	.4	.1	1		1840	225	50.	87.6	7.3
1		0205	26	0.	.0	.0	1		1025	126	5.	.4	.1	1		1845	226	50.	87.6	7.3
1		0210	27	0.	.0	.0	1		1030	127	5.	.5	.1	1		1850	227	50.	87.6	7.3
1		0215	28	0.	.0	.0	1		1035	128	5.	.5	.1	1		1855	228	50.	87.6	7.3

1		0220	29	0.	.0	.0	1		1040	129	5.	.5	.1	1		1900	229	50.	87.5	7.3
1		0225	30	0.	.0	.0	1		1045	130	5.	.5	.1	1		1905	230	50.	87.5	7.3
1		0230	31	0.	.0	.0	1		1050	131	6.	.5	.1	1		1910	231	50.	87.5	7.3
1		0235	32	1.	.0	.0	1		1055	132	6.	.5	.1	1		1915	232	50.	87.5	7.3
1		0240	33	1.	.1	.0	1		1100	133	6.	.5	.1	1		1920	233	50.	87.4	7.3
1		0245	34	1.	.1	.0	1		1105	134	6.	.5	.1	1		1925	234	50.	87.4	7.3
1		0250	35	1.	.1	.0	1		1110	135	6.	.5	.1	1		1930	235	50.	87.4	7.3
1		0255	36	1.	.1	.0	1		1115	136	6.	.5	.1	1		1935	236	50.	87.4	7.3
1		0300	37	1.	.1	.0	1		1120	137	6.	.5	.1	1		1940	237	50.	87.3	7.3
1		0305	38	1.	.1	.0	1		1125	138	6.	.6	.1	1		1945	238	50.	87.3	7.3
1		0310	39	1.	.1	.0	1		1130	139	7.	.6	.1	1		1950	239	50.	87.3	7.3
1		0315	40	1.	.1	.0	1		1135	140	7.	.6	.1	1		1955	240	50.	87.3	7.3
1		0320	41	1.	.1	.0	1		1140	141	7.	.6	.1	1		2000	241	50.	87.2	7.3
1		0325	42	1.	.1	.0	1		1145	142	7.	.6	.1	1		2005	242	50.	87.2	7.3
1		0330	43	1.	.1	.0	1		1150	143	7.	.6	.1	1		2010	243	50.	87.2	7.3
1		0335	44	1.	.1	.0	1		1155	144	8.	.7	.2	1		2015	244	50.	87.1	7.3
1		0340	45	1.	.1	.0	1		1200	145	15.	1.3	.3	1		2020	245	50.	87.1	7.2
1		0345	46	1.	.1	.0	1		1205	146	50.	5.0	1.1	1		2025	246	50.	87.0	7.2
1		0350	47	1.	.1	.0	1		1210	147	50.	14.6	2.4	1		2030	247	50.	86.9	7.2
1		0355	48	1.	.1	.0	1		1215	148	50.	27.9	3.6	1		2035	248	50.	86.9	7.2
1		0400	49	2.	.1	.0	1		1220	149	50.	40.0	4.6	1		2040	249	50.	86.8	7.2
1		0405	50	2.	.1	.0	1		1225	150	50.	49.3	5.2	1		2045	250	50.	86.7	7.2
1		0410	51	2.	.1	.0	1		1230	151	50.	56.4	5.6	1		2050	251	50.	86.7	7.2
1		0415	52	2.	.1	.0	1		1235	152	50.	61.7	5.9	1		2055	252	50.	86.6	7.2
1		0420	53	2.	.2	.0	1		1240	153	50.	65.7	6.2	1		2100	253	50.	86.5	7.2
1		0425	54	2.	.2	.0	1		1245	154	50.	68.9	6.3	1		2105	254	50.	86.5	7.2
1		0430	55	2.	.2	.0	1		1250	155	50.	71.3	6.4	1		2110	255	50.	86.4	7.2
1		0435	56	2.	.2	.0	1		1255	156	50.	73.3	6.6	1		2115	256	50.	86.3	7.2
1		0440	57	2.	.2	.0	1		1300	157	50.	74.9	6.6	1		2120	257	50.	86.3	7.2
1		0445	58	2.	.2	.0	1		1305	158	50.	76.2	6.7	1		2125	258	50.	86.2	7.2
1		0450	59	2.	.2	.0	1		1310	159	50.	77.3	6.8	1		2130	259	50.	86.1	7.2
1		0455	60	2.	.2	.0	1		1315	160	50.	78.2	6.8	1		2135	260	50.	86.0	7.2
1		0500	61	2.	.2	.0	1		1320	161	50.	79.0	6.9	1		2140	261	50.	86.0	7.2
1		0505	62	2.	.2	.0	1		1325	162	50.	79.7	6.9	1		2145	262	50.	85.9	7.2
1		0510	63	2.	.2	.0	1		1330	163	50.	80.3	6.9	1		2150	263	50.	85.8	7.2
1		0515	64	2.	.2	.0	1		1335	164	50.	80.8	6.9	1		2155	264	50.	85.8	7.2
1		0520	65	2.	.2	.0	1		1340	165	50.	81.2	7.0	1		2200	265	50.	85.7	7.2
1		0525	66	2.	.2	.0	1		1345	166	50.	81.7	7.0	1		2205	266	50.	85.6	7.2
1		0530	67	2.	.2	.0	1		1350	167	50.	82.1	7.0	1		2210	267	50.	85.6	7.2
1		0535	68	2.	.2	.0	1		1355	168	50.	82.4	7.0	1		2215	268	50.	85.5	7.2
1		0540	69	2.	.2	.0	1		1400	169	50.	82.8	7.0	1		2220	269	50.	85.4	7.2
1		0545	70	2.	.2	.0	1		1405	170	50.	83.1	7.1	1		2225	270	50.	85.4	7.2
1		0550	71	3.	.2	.1	1		1410	171	50.	83.4	7.1	1		2230	271	50.	85.3	7.2
1		0555	72	3.	.2	.1	1		1415	172	50.	83.7	7.1	1		2235	272	50.	85.2	7.2
1		0600	73	3.	.2	.1	1		1420	173	50.	83.9	7.1	1		2240	273	50.	85.1	7.2
1		0605	74	3.	.2	.1	1		1425	174	50.	84.2	7.1	1		2245	274	50.	85.1	7.2
1		0610	75	3.	.2	.1	1		1430	175	50.	84.4	7.1	1		2250	275	50.	85.0	7.2
1		0615	76	3.	.2	.1	1		1435	176	50.	84.6	7.1	1		2255	276	50.	84.9	7.1
1		0620	77	3.	.2	.1	1		1440	177	50.	84.8	7.1	1		2300	277	50.	84.9	7.1
1		0625	78	3.	.2	.1	1		1445	178	50.	85.0	7.1	1		2305	278	50.	84.8	7.1
1		0630	79	3.	.3	.1	1		1450	179	50.	85.1	7.2	1		2310	279	50.	84.7	7.1
1		0635	80	3.	.3	.1	1		1455	180	50.	85.3	7.2	1		2315	280	50.	84.7	7.1
1		0640	81	3.	.3	.1	1		1500	181	50.	85.4	7.2	1		2320	281	50.	84.6	7.1
1		0645	82	3.	.3	.1	1		1505	182	50.	85.5	7.2	1		2325	282	50.	84.5	7.1
1		0650	83	3.	.3	.1	1		1510	183	50.	85.7	7.2	1		2330	283	50.	84.5	7.1
1		0655	84	3.	.3	.1	1		1515	184	50.	85.8	7.2	1		2335	284	50.	84.4	7.1
1		0700	85	3.	.3	.1	1		1520	185	50.	85.9	7.2	1		2340	285	50.	84.3	7.1
1		0705	86	3.	.3	.1	1		1525	186	50.	86.0	7.2	1		2345	286	50.	84.2	7.1
1		0710	87	3.	.3	.1	1		1530	187	50.	86.1	7.2	1		2350	287	50.	84.2	7.1
1		0715	88	3.	.3	.1	1		1535	188	50.	86.2	7.2	1		2355	288	50.	84.1	7.1
1		0720	89	3.	.3	.1	1		1540	189	50.	86.3	7.2	2		0000	289	50.	84.0	7.1
1		0725	90	3.	.3	.1	1		1545	190	50.	86.4	7.2	2		0005	290	50.	84.0	7.1
1		0730	91	3.	.3	.1	1		1550	191	50.	86.5	7.2	2		0010	291	50.	83.9	7.1
1		0735	92	3.	.3	.1	1		1555	192	50.	86.6	7.2	2		0015	292	50.	83.8	7.1
1		0740	93	3.	.3	.1	1		1600	193	50.	86.6	7.2	2		0020	293	50.	83.6	7.1
1		0745	94	3.	.3	.1	1		1605	194	50.	86.7	7.2	2		0025	294	50.	83.5	7.1
1		0750	95	3.	.3	.1	1		1610	195	50.	86.8	7.2	2		0030	295	50.	83.3	7.1
1		0755	96	4.	.3	.1	1		1615	196	50.	86.9	7.2	2		0035	296	50.	83.2	7.1
1		0800	97	4.	.3	.1	1		1620	197	50.	86.9	7.2	2		0040	297	50.	83.0	7.1
1		0805	98	4.	.3	.1	1		1625	198	50.	87.0	7.2	2		0045	298	50.	82.8	7.0
1		0810	99	4.	.3	.1	1		1630	199	50.	87.1	7.2	2		0050	299	50.	82.6	7.0
1		0815	100	4.	.3	.1	1		1635	200	50.	87.1	7.3	2		0055	300	50.	82.4	7.0

PEAK FLOW	TIME		6-HR	MAXIMUM AVERAGE FLOW 24-HR	72-HR	24.92-HR
(CFS)	(HR)					
		(CFS)				
50.	12.08		50.	28.	27.	27.
		(INCHES)	.203	.457	.457	.457
		(AC-FT)	25.	56.	56.	56.

PEAK STORAGE	TIME	6-HR	MAXIMUM AVERAGE STORAGE 24-HR	72-HR	24.92-HR
(AC-FT)	(HR)				
88.	18.08	87.	45.	43.	43.

PEAK STAGE	TIME	6-HR	MAXIMUM AVERAGE STAGE 24-HR	72-HR	24.92-HR
(FEET)	(HR)				
7.28	18.17	7.25	3.79	3.65	3.65

CUMULATIVE AREA = 2.29 SQ MI

```
*** *** *** *** *** *** *** *** *** *** *** *** *** *** *** *** *** *** *** *** *** *** *** *** *** *** *** *** *** *** *** *** ***


          **************
          *            *
189 KK    *    DBR51   *
          *            *
          **************
                        *********BASLINE ROAD STORM DRAIN (BASIN TO LCC)
                        ROUTE FLOWS WEST ALONG BASELINE TO THE LAVEEN CONVEYANCE CHANNEL
                        CROSS-SECTION REVISED TO REFLECT TO USE STORM DRAIN

           HYDROGRAPH ROUTING DATA

193 RK       KINEMATIC WAVE STREAM ROUTING
                     L       2640.  CHANNEL LENGTH
                     S       .0030  SLOPE
                     N        .013  CHANNEL ROUGHNESS COEFFICIENT
                    CA         .00  CONTRIBUTING AREA
                 SHAPE        CIRC  CHANNEL SHAPE
                    WD        4.00  BOTTOM WIDTH OR DIAMETER
                     Z         .00  SIDE SLOPE
               NDXMIN            2  MINIMUM NUMBER OF DX INTERVALS

                                                  ***
                                 COMPUTED KINEMATIC PARAMETERS
                                     VARIABLE TIME STEP
                                    (DT SHOWN IS A MINIMUM)

              ELEMENT   ALPHA       M        DT       DX      PEAK   TIME TO    VOLUME   MAXIMUM
                                                                      PEAK               CELERITY
                                            (MIN)     (FT)    (CFS)   (MIN)      (IN)     (FPS)

             MAIN         4.27     1.25      1.68   880.00    50.00   732.03      .46      8.73

CONTINUITY SUMMARY (AC-FT) - INFLOW= .5592E  EXCESS= .0000E OUTFLOW= .5562E BASIN STORAGE= .2459E PERCENT ERROR=    .1

                                   INTERPOLATED TO SPECIFIED COMPUTATION INTERVAL

             MAIN         4.27     1.25      5.00             50.00   735.00      .46
    ***           ***           ***           ***           ***

                    HYDROGRAPH AT STATION    DBR51

PEAK FLOW     TIME                            MAXIMUM AVERAGE FLOW
                                      6-HR        24-HR       72-HR      24.92-HR
 (CFS)        (HR)
                       (CFS)
   50.       12.25                    50.          28.         27.          27.
                     (INCHES)        .203         .455        .455         .455
                      (AC-FT)         25.          56.         56.          56.

                    CUMULATIVE AREA =    2.29 SQ MI


*** *** *** *** *** *** *** *** *** *** *** *** *** *** *** *** *** *** *** *** *** *** *** *** *** *** *** *** *** *** *** *** ***


          **************
          *            *
194 KK    *    CB51D   *
          *            *
          **************
                        COMBINE ROUTED FLOW FROM COMPUTATION POINT CB51C AND FLOWS FROM 51ST
                        AVENUE STORM DRAIN PROPOSED BY THE LAVEEN ADMP - ALT6A

197 HC         HYDROGRAPH COMBINATION
                    ICOMP           2  NUMBER OF HYDROGRAPHS TO COMBINE
                                                  ***

    ***           ***           ***           ***           ***

                    HYDROGRAPH AT STATION    CB51D

PEAK FLOW     TIME                            MAXIMUM AVERAGE FLOW
                                      6-HR        24-HR       72-HR      24.92-HR
 (CFS)        (HR)
                       (CFS)
  328.       13.58                   142.          56.         54.          54.
                     (INCHES)        .320         .501        .501         .501
                      (AC-FT)         71.         111.        111.         111.

                    CUMULATIVE AREA =    4.14 SQ MI
```



```
*** *** *** *** *** *** *** *** *** *** *** *** *** *** *** *** *** *** *** *** *** *** *** *** *** *** *** *** *** *** *** *** ***


          **************
          *            *
198 KK    *   RB1591   *
          *            *
          **************
                        ROUTE FLOW FROM COMPUTATION POINT CB51C TO COMPUTATION POINT CB159C
                        MARICOPA DRAIN FROM 51ST AVE TO 59TH AVE.

           HYDROGRAPH ROUTING DATA

201 RS       STORAGE ROUTING
                  NSTPS           3  NUMBER OF SUBREACHES
                   ITYP        ELEV  TYPE OF INITIAL CONDITION
                 RSVRIC       -1.00  INITIAL CONDITION
                      X         .00 WORKING R AND D COEFFICIENT

202 RC       NORMAL DEPTH CHANNEL
                    ANL        .030  LEFT OVERBANK N-VALUE
                   ANCH        .030  MAIN CHANNEL N-VALUE
                    ANR        .030  RIGHT OVERBANK N-VALUE
                  RLNTH       5200.  REACH LENGTH
                    SEL       .0011  ENERGY SLOPE
                  ELMAX          .0  MAX. ELEV. FOR STORAGE/OUTFLOW CALCULATION

                                          CROSS-SECTION DATA
                        --- LEFT OVERBANK ---   ------ MAIN CHANNEL -------   --- RIGHT OVERBANK ---
204 RY       ELEVATION  1000.20   1000.10   1000.00    995.00    995.00   1000.00   1000.10   1000.20
203 RX       DISTANCE       .00     10.00     20.00     45.00    125.00    150.00    160.00    170.00

                                                  ***

                                       COMPUTED STORAGE-OUTFLOW-ELEVATION DATA

            STORAGE       .00      2.66      5.41      8.24     11.17     14.19     17.29     20.49     23.77     27.14
            OUTFLOW       .00     15.29     48.80     96.50    156.83    228.94    312.27    406.46    511.26    626.49
          ELEVATION    995.00    995.27    995.55    995.82    996.09    996.37    996.64    996.92    997.19    997.46

            STORAGE     30.61     34.16     37.80     41.53     45.35     49.26     53.26     57.35     61.53     66.25
            OUTFLOW    752.04    887.83   1033.83   1190.01   1356.39   1532.97   1719.81   1916.93   2124.40   2366.50
          ELEVATION    997.74    998.01    998.28    998.56    998.83    999.11    999.38    999.65    999.93   1000.20

    ***           ***           ***           ***           ***

                    HYDROGRAPH AT STATION    RB1591

PEAK FLOW     TIME                            MAXIMUM AVERAGE FLOW
                                      6-HR        24-HR       72-HR      24.92-HR
 (CFS)        (HR)
                       (CFS)
  228.       14.25                   140.          53.         51.          51.
                     (INCHES)        .314         .472        .472         .472
                      (AC-FT)         70.         104.        104.         104.

PEAK STORAGE  TIME                          MAXIMUM AVERAGE STORAGE
                                      6-HR        24-HR       72-HR      24.92-HR
 (AC-FT)      (HR)
      5.     14.25                     3.           1.          1.           1.

PEAK STAGE    TIME                          MAXIMUM AVERAGE STAGE
                                      6-HR        24-HR       72-HR      24.92-HR
 (FEET)       (HR)
  996.36     14.25                 996.00       995.43      995.41       995.41

                    CUMULATIVE AREA =    4.14 SQ MI


*** *** *** *** *** *** *** *** *** *** *** *** *** *** *** *** *** *** *** *** *** *** *** *** *** *** *** *** *** *** *** *** ***


          **************
          *            *
205 KK    *   AVR55C   *
          *            *
          **************
                        SUB-BASIN AVR55C
                        24-HOUR SCS TYPE II RAINFALL WAS USED TO FIND TC & R FOR THIS BASIN
                        THIS BASIN USED RAINFALL REDUCTION FACTOR OF  .934
                          L =  .93  Kb = .051  Adj. Slope =    5.0

           SUBBASIN RUNOFF DATA

210 BA       SUBBASIN CHARACTERISTICS
                  TAREA         .24  SUBBASIN AREA

             PRECIPITATION DATA

32 PB             STORM        3.92  BASIN TOTAL PRECIPITATION

32 PI           INCREMENTAL PRECIPITATION PATTERN
                    .00       .00       .00       .00       .00       .00       .00       .00       .00       .00
```

```
                  .00     .00     .00     .00     .00     .00     .00     .00     .00     .00
                  .00     .00     .00     .00     .00     .00     .00     .00     .00     .00
                  .00     .00     .00     .00     .00     .00     .00     .00     .00     .00
                  .00     .00     .00     .00     .00     .00     .00     .00     .00     .00
                  .00     .00     .00     .00     .00     .00     .00     .00     .00     .00
                  .00     .00     .00     .00     .00     .00     .00     .00     .00     .00
                  .00     .00     .00     .00     .00     .00     .00     .00     .00     .00
                  .00     .00     .00     .00     .00     .00     .00     .00     .00     .00
                  .00     .00     .00     .00     .00     .00     .00     .00     .00     .00
                  .00     .00     .00     .00     .00     .00     .00     .00     .00     .00
                  .00     .00     .00     .00     .00     .00     .00     .00     .00     .00
                  .00     .00     .00     .00     .00     .00     .00     .01     .00     .01
                  .01     .01     .01     .01     .01     .01     .01     .01     .03     .03
                  .03     .09     .09     .09     .01     .01     .01     .01     .01     .01
                  .01     .01     .01     .01     .01     .01     .00     .00     .00     .00
                  .00     .00     .00     .00     .00     .00     .00     .00     .00     .00
                  .00     .00     .00     .00     .00     .00     .00     .00     .00     .00
                  .00     .00     .00     .00     .00     .00     .00     .00     .00     .00
                  .00     .00     .00     .00     .00     .00     .00     .00     .00     .00
                  .00     .00     .00     .00     .00     .00     .00     .00     .00     .00
                  .00     .00     .00     .00     .00     .00     .00     .00     .00     .00
                  .00     .00     .00     .00     .00     .00     .00     .00     .00     .00
                  .00     .00     .00     .00     .00     .00     .00     .00     .00     .00
                  .00     .00     .00     .00     .00     .00     .00     .00     .00     .00
                  .00     .00     .00     .00     .00     .00     .00     .00     .00     .00
                  .00     .00     .00     .00     .00     .00     .00     .00     .00     .00
                  .00     .00     .00     .00     .00     .00     .00     .00     .00     .00
                  .00     .00     .00     .00     .00     .00     .00     .00

211 LG        GREEN AND AMPT LOSS RATE
                    STRTL         .25  STARTING LOSS
                      DTH         .15  MOISTURE DEFICIT
                     PSIF        8.00  WETTING FRONT SUCTION
                    XKSAT         .10  HYDRAULIC CONDUCTIVITY
                    RTIMP       29.00  PERCENT IMPERVIOUS AREA

212 UC        CLARK UNITGRAPH
                       TC        1.21  TIME OF CONCENTRATION
                        R         .97  STORAGE COEFFICIENT

213 UA        ACCUMULATED-AREA VS. TIME,  11 ORDINATES
                   .0      5.0     16.0     30.0     65.0     77.0     84.0     90.0     94.0     97.0
                100.0

                                                 ***

                                      UNIT HYDROGRAPH PARAMETERS
                                CLARK    TC=  1.21 HR,        R=   .97 HR
                               SNYDER    TP=   .68 HR,       CP=   .41

                                             UNIT HYDROGRAPH
                                       68 END-OF-PERIOD ORDINATES
              3.       9.      19.      31.      50.      77.      93.      96.      96.      95.
             92.      89.      85.      81.      77.      72.      66.      60.      55.      51.
             47.      43.      39.      36.      33.      30.      28.      26.      24.      22.
             20.      18.      17.      15.      14.      13.      12.      11.      10.       9.
              8.       8.       7.       7.       6.       5.       5.       5.       4.       4.
              4.       3.       3.       3.       3.       2.       2.       2.       2.       2.
              2.       1.       1.       1.       1.       1.       1.       1.

    ***             ***             ***             ***             ***

                   HYDROGRAPH AT STATION    AVR55C

 TOTAL RAINFALL =     3.92, TOTAL LOSS =     1.61, TOTAL EXCESS =     2.32

PEAK FLOW       TIME                          MAXIMUM AVERAGE FLOW
                                       6-HR        24-HR       72-HR      24.92-HR
 (CFS)          (HR)
                             (CFS)
  152.         12.58                    51.         15.         14.         14.
                           (INCHES)    1.958       2.297       2.298       2.298
                            (AC-FT)      25.         30.         30.         30.

                       CUMULATIVE AREA =      .24 SQ MI

*** *** *** *** *** *** *** *** *** *** *** *** *** *** *** *** *** *** *** *** *** *** *** *** *** *** *** *** *** *** *** *** *** ***

             **************
             *            *
215 KK       *   AVR55R   *
             *            *
             **************
                            DIVERT RETENTION VOLUME

   DT           DIVERSION
                        ISTAD      RET55C  DIVERSION HYDROGRAPH IDENTIFICATION
                       DSTRMX       25.60  MAXIMUM VOLUME TO BE DIVERTED

   DI              INFLOW          .00   1000.00  10000.00

   DQ        DIVERTED FLOW         .00   1000.00  10000.00
```



```
                                                                  ***
    ***             ***             ***             ***             ***

                      DIVERSION HYDROGRAPH    RET55C

PEAK FLOW       TIME                          MAXIMUM AVERAGE FLOW
                                       6-HR        24-HR       72-HR      24.92-HR
 (CFS)          (HR)
                             (CFS)
  152.         12.58                    48.         13.         12.         12.
                           (INCHES)    1.860       1.992       1.992       1.992
                            (AC-FT)      24.         26.         26.         26.

                       CUMULATIVE AREA =      .24 SQ MI

    ***             ***             ***             ***             ***

                      HYDROGRAPH AT STATION    AVR55R

PEAK FLOW       TIME                          MAXIMUM AVERAGE FLOW
                                       6-HR        24-HR       72-HR      24.92-HR
 (CFS)          (HR)
                             (CFS)
   23.         15.17                     7.          2.          2.          2.
                           (INCHES)     .254        .306        .306        .306
                            (AC-FT)       3.          4.          4.          4.

                       CUMULATIVE AREA =      .24 SQ MI

*** *** *** *** *** *** *** *** *** *** *** *** *** *** *** *** *** *** *** *** *** *** *** *** *** *** *** *** *** *** *** *** *** ***

             **************
             *            *
220 KK       *   RB1592   *
             *            *
             **************
                          ROUTE FLOW FROM SUBASIN AVR55C TO COMPUTATION POINT CB159C
                         ROUTING REVISED TO REFLECT URBANIZED CONDITIONS

               HYDROGRAPH ROUTING DATA

223 RS          STORAGE ROUTING
                      NSTPS           3  NUMBER OF SUBREACHES
                       ITYP        ELEV  TYPE OF INITIAL CONDITION
                     RSVRIC       -1.00  INITIAL CONDITION
                          X         .00 WORKING R AND D COEFFICIENT

224 RC          NORMAL DEPTH CHANNEL
                        ANL        .035  LEFT OVERBANK N-VALUE
                       ANCH        .035  MAIN CHANNEL N-VALUE
                        ANR        .035  RIGHT OVERBANK N-VALUE
                      RLNTH       3600.  REACH LENGTH
                        SEL       .0010  ENERGY SLOPE
                      ELMAX          .0  MAX. ELEV. FOR STORAGE/OUTFLOW CALCULATION

                                          CROSS-SECTION DATA
                          --- LEFT OVERBANK ---   ------ MAIN CHANNEL -------   --- RIGHT OVERBANK ---
226 RY          ELEVATION  1004.00   1003.00   1002.00    999.00    999.00   1002.00   1003.00   1004.00
225 RX           DISTANCE      .00     20.00     40.00     46.00     56.00     62.00     82.00    102.00

                                                  ***

                                           COMPUTED STORAGE-OUTFLOW-ELEVATION DATA

           STORAGE      .00       .23       .48       .76      1.05      1.37      1.72      2.08      2.47      2.88
           OUTFLOW      .00      1.47      4.74      9.48     15.59     23.06     31.90     42.11     53.74     66.81
         ELEVATION   999.00    999.26    999.53    999.79   1000.05   1000.32   1000.58   1000.84   1001.11   1001.37

           STORAGE     3.32      3.78      4.30      5.03      5.99      7.17      8.59     10.24     12.11     14.22
           OUTFLOW    81.36     97.43    117.30    141.65    170.49    204.92    245.87    294.20    350.69    416.13
         ELEVATION  1001.63   1001.90   1002.16   1002.42   1002.68   1002.95   1003.21   1003.47   1003.74   1004.00

    ***             ***             ***             ***             ***

                      HYDROGRAPH AT STATION    RB1592

PEAK FLOW       TIME                          MAXIMUM AVERAGE FLOW
                                       6-HR        24-HR       72-HR      24.92-HR
 (CFS)          (HR)
                             (CFS)
   13.         16.25                     6.          2.          2.          2.
                           (INCHES)     .236        .286        .286        .286
                            (AC-FT)       3.          4.          4.          4.

PEAK STORAGE    TIME                          MAXIMUM AVERAGE STORAGE
                                       6-HR        24-HR       72-HR      24.92-HR
 (AC-FT)        (HR)
     0.        16.17                     0.          0.          0.          0.
```

```
 PEAK STAGE   TIME                              MAXIMUM AVERAGE STAGE
                                   6-HR        24-HR       72-HR      24.92-HR
   (FEET)     (HR)
   999.96     16.25               999.58      999.19      999.18      999.18

                          CUMULATIVE AREA =    .24 SQ MI


*** *** *** *** *** *** *** *** *** *** *** *** *** *** *** *** *** *** *** *** *** *** *** *** *** *** *** *** *** *** *** *** ***

              **************
              *            *
227 KK        *  BR159C    *
              *            *
              **************
                         SUB-BASIN BR159C
                         24-HOUR SCS TYPE II RAINFALL WAS USED TO FIND TC & R FOR THIS BASIN
                         THIS BASIN USED RAINFALL REDUCTION FACTOR OF  .934
                           L = 1.68  Kb = .054  Adj. Slope =     8.0

               SUBBASIN RUNOFF DATA

232 BA           SUBBASIN CHARACTERISTICS
                      TAREA          .68  SUBBASIN AREA

                 PRECIPITATION DATA

 32 PB                STORM          3.92  BASIN TOTAL PRECIPITATION

 32 PI              INCREMENTAL PRECIPITATION PATTERN
                     .00      .00      .00      .00      .00      .00      .00      .00      .00      .00
                     .00      .00      .00      .00      .00      .00      .00      .00      .00      .00
                     .00      .00      .00      .00      .00      .00      .00      .00      .00      .00
                     .00      .00      .00      .00      .00      .00      .00      .00      .00      .00
                     .00      .00      .00      .00      .00      .00      .00      .00      .00      .00
                     .00      .00      .00      .00      .00      .00      .00      .00      .00      .00
                     .00      .00      .00      .00      .00      .00      .00      .00      .00      .00
                     .00      .00      .00      .00      .00      .00      .00      .00      .00      .00
                     .00      .00      .00      .00      .00      .00      .00      .00      .00      .00
                     .00      .00      .00      .00      .00      .00      .00      .00      .00      .00
                     .00      .00      .00      .00      .00      .00      .00      .00      .00      .00
                     .00      .00      .00      .00      .00      .00      .00      .00      .00      .00
                     .00      .00      .00      .00      .00      .00      .00      .01      .00      .01
                     .01      .01      .01      .01      .01      .01      .01      .01      .03      .03
                     .03      .09      .09      .09      .01      .01      .01      .01      .01      .01
                     .01      .01      .01      .01      .01      .01      .00      .00      .00      .00
                     .00      .00      .00      .00      .00      .00      .00      .00      .00      .00
                     .00      .00      .00      .00      .00      .00      .00      .00      .00      .00
                     .00      .00      .00      .00      .00      .00      .00      .00      .00      .00
                     .00      .00      .00      .00      .00      .00      .00      .00      .00      .00
                     .00      .00      .00      .00      .00      .00      .00      .00      .00      .00
                     .00      .00      .00      .00      .00      .00      .00      .00      .00      .00
                     .00      .00      .00      .00      .00      .00      .00      .00      .00      .00
                     .00      .00      .00      .00      .00      .00      .00      .00      .00      .00
                     .00      .00      .00      .00      .00      .00      .00      .00      .00      .00
                     .00      .00      .00      .00      .00      .00      .00      .00      .00      .00
                     .00      .00      .00      .00      .00      .00      .00      .00      .00      .00
                     .00      .00      .00      .00      .00      .00      .00      .00      .00      .00
                     .00      .00      .00      .00      .00      .00      .00      .00

233 LG           GREEN AND AMPT LOSS RATE
                      STRTL          .17  STARTING LOSS
                        DTH          .25  MOISTURE DEFICIT
                       PSIF         4.80  WETTING FRONT SUCTION
                      XKSAT          .42  HYDRAULIC CONDUCTIVITY
                      RTIMP        28.00  PERCENT IMPERVIOUS AREA

234 UC           CLARK UNITGRAPH
                         TC         1.50  TIME OF CONCENTRATION
                          R         1.10  STORAGE COEFFICIENT

235 UA           ACCUMULATED-AREA VS. TIME,  11 ORDINATES
                       .0       5.0      16.0      30.0      65.0      77.0      84.0      90.0      94.0      97.0
                    100.0

                                                 ***

                                        UNIT HYDROGRAPH PARAMETERS
                                   CLARK   TC=  1.50 HR,        R=  1.10 HR
                                  SNYDER   TP=   .82 HR,       CP=   .43

                                             UNIT HYDROGRAPH
                                       78 END-OF-PERIOD ORDINATES
           5.       17.       34.       56.       80.      117.      174.      216.      230.      234.
         231.      228.      223.      217.      209.      200.      192.      184.      174.      161.
         149.      139.      128.      119.      110.      102.       95.       88.       82.       76.
          70.       65.       60.       56.       52.       48.       44.       41.       38.       35.
          33.       30.       28.       26.       24.       22.       21.       19.       18.       17.
          15.       14.       13.       12.       11.       11.       10.        9.        8.        8.
           7.        7.        6.        6.        5.        5.        5.        4.        4.        4.
           3.        3.        3.        3.        2.        2.        2.        2.
```



```
      ***            ***            ***            ***            ***

                                HYDROGRAPH AT STATION    BR159C

    TOTAL RAINFALL =    3.92, TOTAL LOSS =    2.06, TOTAL EXCESS =    1.86

 PEAK FLOW      TIME                            MAXIMUM AVERAGE FLOW
                                     6-HR        24-HR       72-HR      24.92-HR
   (CFS)        (HR)
                              (CFS)
    300.       12.67                  110.         33.         32.         32.
                           (INCHES)  1.511       1.843       1.844       1.844
                            (AC-FT)    54.         66.         66.         66.

                           CUMULATIVE AREA =    .68 SQ MI


*** *** *** *** *** *** *** *** *** *** *** *** *** *** *** *** *** *** *** *** *** *** *** *** *** *** *** *** *** *** *** *** ***

              **************
              *            *
237 KK        *  BR159R    *
              *            *
              **************
                         DIVERT RETENTION VOLUME
                         RELAXED RETENTION VOLUME FROM 43.2 AC-FT

  DT            DIVERSION
                      ISTAD        RET159  DIVERSION HYDROGRAPH IDENTIFICATION
                     DSTRMX         39.50  MAXIMUM VOLUME TO BE DIVERTED

  DI               INFLOW             .00    1000.00   10000.00

  DQ          DIVERTED FLOW           .00    1000.00   10000.00

                                                                 ***
      ***            ***            ***            ***            ***

                                DIVERSION HYDROGRAPH    RET159

 PEAK FLOW      TIME                            MAXIMUM AVERAGE FLOW
                                     6-HR        24-HR       72-HR      24.92-HR
   (CFS)        (HR)
                              (CFS)
    300.       12.67                   73.         20.         19.         19.
                           (INCHES)  1.008       1.097       1.097       1.097
                            (AC-FT)    36.         40.         40.         40.

                           CUMULATIVE AREA =    .68 SQ MI

      ***            ***            ***            ***            ***

                                HYDROGRAPH AT STATION    BR159R

 PEAK FLOW      TIME                            MAXIMUM AVERAGE FLOW
                                     6-HR        24-HR       72-HR      24.92-HR
   (CFS)        (HR)
                              (CFS)
    193.       13.67                   48.         14.         13.         13.
                           (INCHES)   .666        .746        .746        .746
                            (AC-FT)    24.         27.         27.         27.

                           CUMULATIVE AREA =    .68 SQ MI


*** *** *** *** *** *** *** *** *** *** *** *** *** *** *** *** *** *** *** *** *** *** *** *** *** *** *** *** *** *** *** *** ***

              **************
              *            *
243 KK        *   VR59C    *
              *            *
              **************
                         SUB-BASIN VR59C
                         24-HOUR SCS TYPE II RAINFALL WAS USED TO FIND TC & R FOR THIS BASIN
                         THIS BASIN USED RAINFALL REDUCTION FACTOR OF  .934
                           L =  .75  Kb = .083  Adj. Slope =     4.0

               SUBBASIN RUNOFF DATA

248 BA           SUBBASIN CHARACTERISTICS
                      TAREA          .23  SUBBASIN AREA

                 PRECIPITATION DATA

 32 PB                STORM          3.92  BASIN TOTAL PRECIPITATION

 32 PI              INCREMENTAL PRECIPITATION PATTERN
                     .00      .00      .00      .00      .00      .00      .00      .00      .00      .00
```

.00	.00	.00	.00	.00	.00	.00	.00	.00	.00
.00	.00	.00	.00	.00	.00	.00	.00	.00	.00
.00	.00	.00	.00	.00	.00	.00	.00	.00	.00
.00	.00	.00	.00	.00	.00	.00	.00	.00	.00
.00	.00	.00	.00	.00	.00	.00	.00	.00	.00
.00	.00	.00	.00	.00	.00	.00	.00	.00	.00
.00	.00	.00	.00	.00	.00	.00	.00	.00	.00
.00	.00	.00	.00	.00	.00	.00	.00	.00	.00
.00	.00	.00	.00	.00	.00	.00	.00	.00	.00
.00	.00	.00	.00	.00	.00	.00	.00	.00	.00
.00	.00	.00	.00	.00	.00	.00	.00	.00	.00
.00	.00	.00	.00	.00	.00	.00	.01	.00	.01
.01	.01	.01	.01	.01	.01	.01	.01	.03	.03
.03	.09	.09	.09	.01	.01	.01	.01	.01	.01
.01	.01	.01	.01	.01	.01	.00	.00	.00	.00
.00	.00	.00	.00	.00	.00	.00	.00	.00	.00
.00	.00	.00	.00	.00	.00	.00	.00	.00	.00
.00	.00	.00	.00	.00	.00	.00	.00	.00	.00
.00	.00	.00	.00	.00	.00	.00	.00	.00	.00
.00	.00	.00	.00	.00	.00	.00	.00	.00	.00
.00	.00	.00	.00	.00	.00	.00	.00	.00	.00
.00	.00	.00	.00	.00	.00	.00	.00	.00	.00
.00	.00	.00	.00	.00	.00	.00	.00	.00	.00
.00	.00	.00	.00	.00	.00	.00	.00	.00	.00
.00	.00	.00	.00	.00	.00	.00	.00	.00	.00
.00	.00	.00	.00	.00	.00	.00	.00	.00	.00
.00	.00	.00	.00	.00	.00	.00	.00	.00	.00
.00	.00	.00	.00	.00	.00	.00	.00		

249 LG GREEN AND AMPT LOSS RATE

STRTL	.13	STARTING LOSS
DTH	.15	MOISTURE DEFICIT
PSIF	7.00	WETTING FRONT SUCTION
XKSAT	.18	HYDRAULIC CONDUCTIVITY
RTIMP	9.00	PERCENT IMPERVIOUS AREA

250 UC CLARK UNITGRAPH

TC	1.50	TIME OF CONCENTRATION
R	1.06	STORAGE COEFFICIENT

251 UA ACCUMULATED-AREA VS. TIME, 11 ORDINATES

.0	5.0	16.0	30.0	65.0	77.0	84.0	90.0	94.0	97.0
100.0									

***

UNIT HYDROGRAPH PARAMETERS
CLARK TC= 1.50 HR, R= 1.06 HR
SNYDER TP= .81 HR, CP= .44

UNIT HYDROGRAPH
75 END-OF-PERIOD ORDINATES

2.	6.	12.	20.	28.	42.	62.	77.	82.	83.
82.	81.	79.	76.	73.	70.	67.	64.	61.	56.
52.	48.	44.	41.	38.	35.	32.	30.	28.	25.
24.	22.	20.	19.	17.	16.	15.	14.	13.	12.
11.	10.	9.	8.	8.	7.	7.	6.	6.	5.
5.	4.	4.	4.	4.	3.	3.	3.	3.	2.
2.	2.	2.	2.	2.	1.	1.	1.	1.	1.
1.	1.	1.	1.	1.					

*** *** *** *** ***

HYDROGRAPH AT STATION VR59C

TOTAL RAINFALL = 3.92, TOTAL LOSS = 2.26, TOTAL EXCESS = 1.67

PEAK FLOW	TIME		MAXIMUM AVERAGE FLOW			
			6-HR	24-HR	72-HR	24.92-HR
(CFS)	(HR)					
		(CFS)				
117.	12.75		39.	10.	10.	10.
		(INCHES)	1.545	1.656	1.656	1.656
		(AC-FT)	19.	21.	21.	21.

CUMULATIVE AREA = .23 SQ MI

*** ***

```
              **************
              *            *
253 KK        *   RB1593   *
              *            *
              **************
```

ROUTE FLOW FROM SUB-BASIN VR59C TO COMPUTATION POINT CB159C
ROUTING REVISED TO REFLECT URBANIZED CONDITIONS

HYDROGRAPH ROUTING DATA

256 RS STORAGE ROUTING

NSTPS	3	NUMBER OF SUBREACHES
ITYP	ELEV	TYPE OF INITIAL CONDITION

RSVRIC	-1.00	INITIAL CONDITION
X	.00	WORKING R AND D COEFFICIENT

257 RC NORMAL DEPTH CHANNEL

ANL	.035	LEFT OVERBANK N-VALUE
ANCH	.035	MAIN CHANNEL N-VALUE
ANR	.035	RIGHT OVERBANK N-VALUE
RLNTH	3000.	REACH LENGTH
SEL	.0015	ENERGY SLOPE
ELMAX	.0	MAX. ELEV. FOR STORAGE/OUTFLOW CALCULATION

CROSS-SECTION DATA

		--- LEFT OVERBANK ---		------ MAIN CHANNEL -------				--- RIGHT OVERBANK ---	
259 RY	ELEVATION	1002.00	1001.30	1001.00	998.00	998.00	1001.00	1001.30	1002.00
258 RX	DISTANCE	.00	20.00	40.00	46.00	56.00	62.00	82.00	102.00

***

COMPUTED STORAGE-OUTFLOW-ELEVATION DATA

STORAGE	.00	.15	.31	.49	.68	.88	1.09	1.31	1.55	1.80
OUTFLOW	.00	1.24	3.98	7.92	12.97	19.09	26.28	34.53	43.85	54.27
ELEVATION	998.00	998.21	998.42	998.63	998.84	999.05	999.26	999.47	999.68	999.89
STORAGE	2.06	2.33	2.62	2.92	3.23	3.66	4.47	5.52	6.73	8.12
OUTFLOW	65.80	78.45	92.27	107.26	123.45	143.96	170.63	204.76	246.25	295.71
ELEVATION	1000.11	1000.32	1000.53	1000.74	1000.95	1001.16	1001.37	1001.58	1001.79	1002.00

*** *** *** *** ***

HYDROGRAPH AT STATION RB1593

PEAK FLOW	TIME		MAXIMUM AVERAGE FLOW			
			6-HR	24-HR	72-HR	24.92-HR
(CFS)	(HR)					
		(CFS)				
114.	13.00		39.	10.	10.	10.
		(INCHES)	1.541	1.650	1.650	1.650
		(AC-FT)	19.	21.	21.	21.

PEAK STORAGE	TIME		MAXIMUM AVERAGE STORAGE			
			6-HR	24-HR	72-HR	24.92-HR
(AC-FT)	(HR)					
1.	13.00		0.	0.	0.	0.

PEAK STAGE	TIME		MAXIMUM AVERAGE STAGE			
			6-HR	24-HR	72-HR	24.92-HR
(FEET)	(HR)					
1000.83	13.00		999.37	998.45	998.43	998.43

CUMULATIVE AREA = .23 SQ MI

*** ***

```
              **************
              *            *
260 KK        *   CB159N   *
              *            *
              **************
```

COMBINE ROUTED FLOWS FROM COMPUTATION POINT CB51C AND SUB-BASINS AVR51C
AND VR59C WITH RUNOFF FROM SUB-BASIN BR159C
CP (NORTH FLOWS) AT 59TH AVE AND BASELINE RD.

264 HC HYDROGRAPH COMBINATION
ICOMP 4 NUMBER OF HYDROGRAPHS TO COMBINE

***

*** *** *** *** ***

HYDROGRAPH AT STATION CB159N

PEAK FLOW	TIME		MAXIMUM AVERAGE FLOW			
			6-HR	24-HR	72-HR	24.92-HR
(CFS)	(HR)					
		(CFS)				
417.	14.08		218.	78.	75.	75.
		(INCHES)	.383	.550	.550	.550
		(AC-FT)	108.	155.	155.	155.

CUMULATIVE AREA = 5.29 SQ MI

*** ***

```
              **************
              *            *
265 KK        *   OA55C    *
```

```
 *           *
 **************
              SUB-BASIN OA55C
              24-HOUR SCS TYPE II RAINFALL WAS USED TO FIND TC & R FOR THIS BASIN
              THIS BASIN USED RAINFALL REDUCTION FACTOR OF  .934
                L =  .96  Kb = .049  Adj. Slope =     3.0

          SUBBASIN RUNOFF DATA

270 BA      SUBBASIN CHARACTERISTICS
                  TAREA          .25  SUBBASIN AREA

            PRECIPITATION DATA

 32 PB            STORM          3.92  BASIN TOTAL PRECIPITATION

 32 PI          INCREMENTAL PRECIPITATION PATTERN
                   .00      .00      .00      .00      .00      .00      .00      .00      .00      .00
                   .00      .00      .00      .00      .00      .00      .00      .00      .00      .00
                   .00      .00      .00      .00      .00      .00      .00      .00      .00      .00
                   .00      .00      .00      .00      .00      .00      .00      .00      .00      .00
                   .00      .00      .00      .00      .00      .00      .00      .00      .00      .00
                   .00      .00      .00      .00      .00      .00      .00      .00      .00      .00
                   .00      .00      .00      .00      .00      .00      .00      .00      .00      .00
                   .00      .00      .00      .00      .00      .00      .00      .00      .00      .00
                   .00      .00      .00      .00      .00      .00      .00      .00      .00      .00
                   .00      .00      .00      .00      .00      .00      .00      .00      .00      .00
                   .00      .00      .00      .00      .00      .00      .00      .00      .00      .00
                   .00      .00      .00      .00      .00      .00      .00      .00      .00      .00
                   .00      .00      .00      .00      .00      .00      .00      .01      .00      .01
                   .01      .01      .01      .01      .01      .01      .01      .01      .03      .03
                   .03      .09      .09      .09      .01      .01      .01      .01      .01      .01
                   .01      .01      .01      .01      .01      .01      .00      .00      .00      .00
                   .00      .00      .00      .00      .00      .00      .00      .00      .00      .00
                   .00      .00      .00      .00      .00      .00      .00      .00      .00      .00
                   .00      .00      .00      .00      .00      .00      .00      .00      .00      .00
                   .00      .00      .00      .00      .00      .00      .00      .00      .00      .00
                   .00      .00      .00      .00      .00      .00      .00      .00      .00      .00
                   .00      .00      .00      .00      .00      .00      .00      .00      .00      .00
                   .00      .00      .00      .00      .00      .00      .00      .00      .00      .00
                   .00      .00      .00      .00      .00      .00      .00      .00      .00      .00
                   .00      .00      .00      .00      .00      .00      .00      .00      .00      .00
                   .00      .00      .00      .00      .00      .00      .00      .00      .00      .00
                   .00      .00      .00      .00      .00      .00      .00      .00      .00      .00
                   .00      .00      .00      .00      .00      .00      .00      .00      .00      .00
                   .00      .00      .00      .00      .00      .00      .00      .00

271 LG      GREEN AND AMPT LOSS RATE
                 STRTL       .29  STARTING LOSS
                   DTH       .25  MOISTURE DEFICIT
                  PSIF      4.80  WETTING FRONT SUCTION
                 XKSAT       .36  HYDRAULIC CONDUCTIVITY
                 RTIMP     19.00  PERCENT IMPERVIOUS AREA

272 UC      CLARK UNITGRAPH
                    TC      1.50  TIME OF CONCENTRATION
                     R      1.25  STORAGE COEFFICIENT

273 UA      ACCUMULATED-AREA VS. TIME,  11 ORDINATES
                  .0       5.0      16.0      30.0      65.0      77.0      84.0      90.0      94.0      97.0
               100.0

                                                   ***

                                     UNIT HYDROGRAPH PARAMETERS
                                  CLARK   TC=  1.50 HR,        R=  1.25 HR
                                 SNYDER   TP=   .84 HR,       CP=   .40

                                          UNIT HYDROGRAPH
                                     87 END-OF-PERIOD ORDINATES
          2.        5.       11.       18.       26.       38.       57.       71.       76.       77.
         77.       77.       75.       74.       72.       69.       67.       64.       61.       57.
         54.       50.       47.       44.       41.       38.       36.       34.       31.       29.
         28.       26.       24.       23.       21.       20.       18.       17.       16.       15.
         14.       13.       12.       12.       11.       10.        9.        9.        8.        8.
          7.        7.        6.        6.        6.        5.        5.        5.        4.        4.
          4.        3.        3.        3.        3.        3.        2.        2.        2.        2.
          2.        2.        2.        2.        1.        1.        1.        1.        1.        1.
          1.        1.        1.        1.        1.        1.        1.

  ***            ***            ***            ***            ***

                  HYDROGRAPH AT STATION      OA55C

  TOTAL RAINFALL =     3.92, TOTAL LOSS =     2.29, TOTAL EXCESS =     1.63

PEAK FLOW      TIME                          MAXIMUM AVERAGE FLOW
                                     6-HR          24-HR        72-HR      24.92-HR
  (CFS)        (HR)
                            (CFS)
    97.       12.75                   37.           11.          10.          10.
                          (INCHES)  1.383         1.618        1.619        1.619
                           (AC-FT)    18.           21.          21.          21.

                        CUMULATIVE AREA =       .25 SQ MI
```



```
*** *** *** *** *** *** *** *** *** *** *** *** *** *** *** *** *** *** *** *** *** *** *** *** *** *** *** *** *** *** *** *** ***

          **************
          *            *
275 KK    *    OA55R   *
          *            *
          **************
                        DIVERT RETENTION VOLUME

   DT          DIVERSION
                     ISTAD       RET55C  DIVERSION HYDROGRAPH IDENTIFICATION
                    DSTRMX         2.40  MAXIMUM VOLUME TO BE DIVERTED

   DI             INFLOW          .00   1000.00  10000.00

   DQ      DIVERTED FLOW          .00   1000.00  10000.00
                                                              ***

   ***            ***            ***            ***            ***

                       DIVERSION HYDROGRAPH    RET55C

PEAK FLOW      TIME                          MAXIMUM AVERAGE FLOW
                                     6-HR          24-HR        72-HR      24.92-HR
  (CFS)        (HR)
                            (CFS)
    27.       12.08                    4.            1.           1.           1.
                          (INCHES)   .141          .183         .183         .183
                           (AC-FT)     2.            2.           2.           2.

                        CUMULATIVE AREA =       .25 SQ MI

   ***            ***            ***            ***            ***

                       HYDROGRAPH AT STATION     OA55R

PEAK FLOW      TIME                          MAXIMUM AVERAGE FLOW
                                     6-HR          24-HR        72-HR      24.92-HR
  (CFS)        (HR)
                            (CFS)
    97.       12.75                   36.            9.           9.           9.
                          (INCHES)  1.350         1.436        1.436        1.436
                           (AC-FT)    18.           19.          19.          19.

                        CUMULATIVE AREA =       .25 SQ MI

*** *** *** *** *** *** *** *** *** *** *** *** *** *** *** *** *** *** *** *** *** *** *** *** *** *** *** *** *** *** *** *** ***

          **************
          *            *
280 KK    *   RD57C    *
          *            *
          **************

                        ROUTE FLOW FROM COMPUTATION POINT CPO55C TO COMPUTAION CDR57C
                        CROSS-SECTION REVISED TO REFLECT URBANIZED CONDITIONS

            HYDROGRAPH ROUTING DATA

283 RS         STORAGE ROUTING
                    NSTPS         2  NUMBER OF SUBREACHES
                     ITYP      ELEV  TYPE OF INITIAL CONDITION
                   RSVRIC     -1.00  INITIAL CONDITION
                        X       .00  WORKING R AND D COEFFICIENT

284 RC         NORMAL DEPTH CHANNEL
                      ANL      .035  LEFT OVERBANK N-VALUE
                     ANCH      .035  MAIN CHANNEL N-VALUE
                      ANR      .035  RIGHT OVERBANK N-VALUE
                    RLNTH     2920.  REACH LENGTH
                      SEL     .0010  ENERGY SLOPE
                    ELMAX        .0  MAX. ELEV. FOR STORAGE/OUTFLOW CALCULATION

                                          CROSS-SECTION DATA
                         --- LEFT OVERBANK ---  ------ MAIN CHANNEL -------  --- RIGHT OVERBANK ---
286 RY       ELEVATION  1030.00  1029.00  1028.00  1022.00  1022.00  1028.00  1029.00  1030.00
285 RX        DISTANCE      .00    40.00    60.00    72.00    97.00   109.00   129.00   149.00

                                                   ***

                                     COMPUTED STORAGE-OUTFLOW-ELEVATION DATA

             STORAGE        .00       .73      1.51      2.33      3.20      4.12      5.09      6.10      7.17      8.28
             OUTFLOW        .00      8.02     25.66     50.92     83.12    121.92    167.17    218.82    276.86    341.32
           ELEVATION    1022.00   1022.42   1022.84   1023.26   1023.68   1024.11   1024.53   1024.95   1025.37   1025.79

             STORAGE       9.43     10.64     11.89     13.19     14.54     16.05     18.03     20.50     23.63     27.48
```

OUTFLOW	412.27	489.78	573.94	664.85	762.62	882.59	1020.65	1176.06	1354.56	1562.96
ELEVATION	1026.21	1026.63	1027.05	1027.47	1027.89	1028.32	1028.74	1029.16	1029.58	1030.00

*** *** *** ***

HYDROGRAPH AT STATION RD57C

PEAK FLOW	TIME		MAXIMUM AVERAGE FLOW			
			6-HR	24-HR	72-HR	24.92-HR
(CFS)	(HR)					
		(CFS)				
90.	13.17		35.	9.	9.	9.
		(INCHES)	1.317	1.427	1.427	1.427
		(AC-FT)	17.	19.	19.	19.

PEAK STORAGE	TIME	MAXIMUM AVERAGE STORAGE			
		6-HR	24-HR	72-HR	24.92-HR
(AC-FT)	(HR)				
2.	13.17	1.	0.	0.	0.

PEAK STAGE	TIME	MAXIMUM AVERAGE STAGE			
		6-HR	24-HR	72-HR	24.92-HR
(FEET)	(HR)				
1023.76	13.17	1022.92	1022.27	1022.26	1022.26

CUMULATIVE AREA = .25 SQ MI

*** ***

```
287 KK      **************
            *            *
            *    DR57C   *
            *            *
            **************
```

SUB-BASIN DR57C
24-HOUR SCS TYPE II RAINFALL WAS USED TO FIND TC & R FOR THIS BASIN
THIS BASIN USED RAINFALL REDUCTION FACTOR OF .934
L = .71 Kb = .054 Adj. Slope = 3.0

```
292 BA      SUBBASIN CHARACTERISTICS
              TAREA        .12  SUBBASIN AREA

            PRECIPITATION DATA

 32 PB        STORM       3.92  BASIN TOTAL PRECIPITATION

 32 PI      INCREMENTAL PRECIPITATION PATTERN
              .00   .00   .00   .00   .00   .00   .00   .00   .00   .00
              .00   .00   .00   .00   .00   .00   .00   .00   .00   .00
              .00   .00   .00   .00   .00   .00   .00   .00   .00   .00
              .00   .00   .00   .00   .00   .00   .00   .00   .00   .00
              .00   .00   .00   .00   .00   .00   .00   .00   .00   .00
              .00   .00   .00   .00   .00   .00   .00   .00   .00   .00
              .00   .00   .00   .00   .00   .00   .00   .00   .00   .00
              .00   .00   .00   .00   .00   .00   .00   .00   .00   .00
              .00   .00   .00   .00   .00   .00   .00   .00   .00   .00
              .00   .00   .00   .00   .00   .00   .00   .00   .00   .00
              .00   .00   .00   .00   .00   .00   .00   .00   .00   .00
              .00   .00   .00   .00   .00   .00   .00   .00   .00   .00
              .00   .00   .00   .00   .00   .00   .00   .00   .00   .00
              .00   .00   .00   .00   .00   .00   .00   .01   .00   .01
              .01   .01   .01   .01   .01   .01   .01   .01   .03   .03
              .03   .09   .09   .09   .01   .01   .01   .01   .01   .01
              .01   .01   .01   .01   .01   .01   .00   .00   .00   .00
              .00   .00   .00   .00   .00   .00   .00   .00   .00   .00
              .00   .00   .00   .00   .00   .00   .00   .00   .00   .00
              .00   .00   .00   .00   .00   .00   .00   .00   .00   .00
              .00   .00   .00   .00   .00   .00   .00   .00   .00   .00
              .00   .00   .00   .00   .00   .00   .00   .00   .00   .00
              .00   .00   .00   .00   .00   .00   .00   .00   .00   .00
              .00   .00   .00   .00   .00   .00   .00   .00   .00   .00
              .00   .00   .00   .00   .00   .00   .00   .00   .00   .00
              .00   .00   .00   .00   .00   .00   .00   .00   .00   .00
              .00   .00   .00   .00   .00   .00   .00   .00   .00   .00
              .00   .00   .00   .00   .00   .00   .00   .00

293 LG      GREEN AND AMPT LOSS RATE
              STRTL        .30  STARTING LOSS
               DTH         .25  MOISTURE DEFICIT
               PSIF       4.80  WETTING FRONT SUCTION
              XKSAT        .36  HYDRAULIC CONDUCTIVITY
              RTIMP      15.00  PERCENT IMPERVIOUS AREA

294 UC      CLARK UNITGRAPH
               TC         1.50  TIME OF CONCENTRATION
                R         1.49  STORAGE COEFFICIENT

295 UA      ACCUMULATED-AREA VS. TIME,  11 ORDINATES
```


.0 5.0 16.0 30.0 65.0 77.0 84.0 90.0 94.0 97.0
100.0

***

UNIT HYDROGRAPH PARAMETERS
CLARK TC= 1.50 HR, R= 1.49 HR
SNYDER TP= .94 HR, CP= .39

UNIT HYDROGRAPH
103 END-OF-PERIOD ORDINATES

1.	2.	4.	7.	11.	16.	23.	29.	32.	32.
33.	33.	32.	32.	31.	30.	29.	29.	28.	26.
25.	23.	22.	21.	20.	19.	18.	17.	16.	15.
14.	13.	13.	12.	11.	11.	10.	10.	9.	9.
8.	8.	7.	7.	6.	6.	6.	5.	5.	5.
5.	4.	4.	4.	4.	3.	3.	3.	3.	3.
3.	2.	2.	2.	2.	2.	2.	2.	2.	2.
2.	1.	1.	1.	1.	1.	1.	1.	1.	1.
1.	1.	1.	1.	1.	1.	1.	1.	1.	1.
0.	0.	0.	0.	0.	0.	0.	0.	0.	0.
0.	0.	0.							

*** *** *** *** ***

HYDROGRAPH AT STATION DR57C

TOTAL RAINFALL = 3.92, TOTAL LOSS = 2.40, TOTAL EXCESS = 1.52

PEAK FLOW	TIME		MAXIMUM AVERAGE FLOW			
			6-HR	24-HR	72-HR	24.92-HR
(CFS)	(HR)					
		(CFS)				
40.	12.75		16.	5.	5.	5.
		(INCHES)	1.300	1.504	1.505	1.505
		(AC-FT)	8.	9.	9.	9.

CUMULATIVE AREA = .12 SQ MI

*** ***

```
297 KK      **************
            *            *
            *    DR57R   *
            *            *
            **************
```

DIVERT RETENTION VOLUME

DT	DIVERSION				
		ISTAD	RET27	DIVERSION HYDROGRAPH IDENTIFICATION	
		DSTRMX	12.80	MAXIMUM VOLUME TO BE DIVERTED	
DI	INFLOW		.00	1000.00	10000.00
DQ	DIVERTED FLOW		.00	1000.00	10000.00

***

*** *** *** *** ***

DIVERSION HYDROGRAPH RET27

PEAK FLOW	TIME		MAXIMUM AVERAGE FLOW			
			6-HR	24-HR	72-HR	24.92-HR
(CFS)	(HR)					
		(CFS)				
40.	12.75		16.	5.	5.	5.
		(INCHES)	1.300	1.504	1.505	1.505
		(AC-FT)	8.	9.	9.	9.

CUMULATIVE AREA = .12 SQ MI

*** *** *** *** ***

HYDROGRAPH AT STATION DR57R

PEAK FLOW	TIME		MAXIMUM AVERAGE FLOW			
			6-HR	24-HR	72-HR	24.92-HR
(CFS)	(HR)					
		(CFS)				
0.	.00		0.	0.	0.	0.
		(INCHES)	.000	.000	.000	.000
		(AC-FT)	0.	0.	0.	0.

CUMULATIVE AREA = .12 SQ MI

*** ***

```
             **************
             *            *
302 KK       *   CDR57C   *
             *            *
             **************
                          COMBINE ROUTED FLOW FROM COMPUTATION POINT CP055C TO RUNOFF FROM SUB-BASIN
                          DR57C

305 HC           HYDROGRAPH COMBINATION
                       ICOMP          2  NUMBER OF HYDROGRAPHS TO COMBINE

                                                                 ***

      ***          ***          ***          ***          ***

                      HYDROGRAPH AT STATION    CDR57C

PEAK FLOW      TIME                           MAXIMUM AVERAGE FLOW
                                       6-HR        24-HR       72-HR      24.92-HR
  (CFS)        (HR)
                           (CFS)
     90.     13.17                     35.           9.          9.           9.
                        (INCHES)      .890         .964        .964         .964
                         (AC-FT)       17.          19.         19.          19.

                      CUMULATIVE AREA =     .36 SQ MI

*** *** *** *** *** *** *** *** *** *** *** *** *** *** *** *** *** *** *** *** *** *** *** *** *** *** *** *** *** *** *** *** *** ***

             **************
             *            *
306 KK       *   RD59C    *
             *            *
             **************
                          ROUTE FLOW FROM COMPUTATION POINT CDR57C TO COMPUTATION POINT CDR59C
                          CROSS-SECTION REVISED TO REFLECT URBANIZED CONDITIONS

             HYDROGRAPH ROUTING DATA

309 RS           STORAGE ROUTING
                      NSTPS           1  NUMBER OF SUBREACHES
                       ITYP        ELEV  TYPE OF INITIAL CONDITION
                     RSVRIC       -1.00  INITIAL CONDITION
                          X         .00  WORKING R AND D COEFFICIENT

310 RC           NORMAL DEPTH CHANNEL
                        ANL        .035  LEFT OVERBANK N-VALUE
                       ANCH        .035  MAIN CHANNEL N-VALUE
                        ANR        .035  RIGHT OVERBANK N-VALUE
                      RLNTH       1200.  REACH LENGTH
                        SEL       .0025  ENERGY SLOPE
                      ELMAX          .0  MAX. ELEV. FOR STORAGE/OUTFLOW CALCULATION

                                        CROSS-SECTION DATA
                          --- LEFT OVERBANK ---   ------ MAIN CHANNEL -------   --- RIGHT OVERBANK ---
312 RY        ELEVATION   1026.00   1025.00   1024.00   1019.00   1019.00   1024.00   1025.00   1026.00
311 RX        DISTANCE        .00     40.00     60.00     72.00     97.00    109.00    129.00    149.00

                                                                 ***

                                  COMPUTED STORAGE-OUTFLOW-ELEVATION DATA

          STORAGE       .00       .26       .54       .84      1.16      1.49      1.85      2.22      2.60      3.01
          OUTFLOW       .00     10.16     32.59     64.79    105.94    155.65    213.76    280.23    355.06    438.34
        ELEVATION   1019.00   1019.37   1019.74   1020.11   1020.47   1020.84   1021.21   1021.58   1021.95   1022.32

          STORAGE      3.43      3.88      4.34      4.81      5.32      5.96      6.74      7.70      8.87     10.27
          OUTFLOW    530.14    630.60    739.84    858.01    995.48   1160.30   1344.97   1552.42   1791.08   2067.16
        ELEVATION   1022.68   1023.05   1023.42   1023.79   1024.16   1024.53   1024.89   1025.26   1025.63   1026.00

      ***          ***          ***          ***          ***

                      HYDROGRAPH AT STATION    RD59C

PEAK FLOW      TIME                           MAXIMUM AVERAGE FLOW
                                       6-HR        24-HR       72-HR      24.92-HR
  (CFS)        (HR)
                           (CFS)
     89.     13.33                     35.           9.          9.           9.
                        (INCHES)      .884         .962        .962         .962
                         (AC-FT)       17.          19.         19.          19.

PEAK STORAGE   TIME                         MAXIMUM AVERAGE STORAGE
                                       6-HR        24-HR       72-HR      24.92-HR
 (AC-FT)       (HR)
      1.     13.33                      1.           0.          0.           0.

PEAK STAGE     TIME                          MAXIMUM AVERAGE STAGE
                                       6-HR        24-HR       72-HR      24.92-HR
 (FEET)        (HR)
```



```
  1020.32     13.33          1019.69     1019.20     1019.19     1019.19

                      CUMULATIVE AREA =     .36 SQ MI

*** *** *** *** *** *** *** *** *** *** *** *** *** *** *** *** *** *** *** *** *** *** *** *** *** *** *** *** *** *** *** *** *** ***

             **************
             *            *
313 KK       *   DR59C    *
             *            *
             **************
                          SUB-BASIN DR59C
                          24-HOUR SCS TYPE II RAINFALL WAS USED TO FIND TC & R FOR THIS BASIN
                          THIS BASIN USED RAINFALL REDUCTION FACTOR OF  .934
                            L =   .69  Kb = .048  Adj. Slope =     7.0

             SUBBASIN RUNOFF DATA

318 BA           SUBBASIN CHARACTERISTICS
                      TAREA         .12  SUBBASIN AREA

                 PRECIPITATION DATA

32 PB                 STORM        3.92  BASIN TOTAL PRECIPITATION

32 PI              INCREMENTAL PRECIPITATION PATTERN
                        .00     .00     .00     .00     .00     .00     .00     .00     .00     .00
                        .00     .00     .00     .00     .00     .00     .00     .00     .00     .00
                        .00     .00     .00     .00     .00     .00     .00     .00     .00     .00
                        .00     .00     .00     .00     .00     .00     .00     .00     .00     .00
                        .00     .00     .00     .00     .00     .00     .00     .00     .00     .00
                        .00     .00     .00     .00     .00     .00     .00     .00     .00     .00
                        .00     .00     .00     .00     .00     .00     .00     .00     .00     .00
                        .00     .00     .00     .00     .00     .00     .00     .00     .00     .00
                        .00     .00     .00     .00     .00     .00     .00     .00     .00     .00
                        .00     .00     .00     .00     .00     .00     .00     .00     .00     .00
                        .00     .00     .00     .00     .00     .00     .00     .00     .00     .00
                        .00     .00     .00     .00     .00     .00     .00     .00     .00     .00
                        .00     .00     .00     .00     .00     .00     .00     .01     .00     .01
                        .01     .01     .01     .01     .01     .01     .01     .01     .03     .03
                        .03     .09     .09     .09     .01     .01     .01     .01     .01     .01
                        .01     .01     .01     .01     .01     .01     .00     .00     .00     .00
                        .00     .00     .00     .00     .00     .00     .00     .00     .00     .00
                        .00     .00     .00     .00     .00     .00     .00     .00     .00     .00
                        .00     .00     .00     .00     .00     .00     .00     .00     .00     .00
                        .00     .00     .00     .00     .00     .00     .00     .00     .00     .00
                        .00     .00     .00     .00     .00     .00     .00     .00     .00     .00
                        .00     .00     .00     .00     .00     .00     .00     .00     .00     .00
                        .00     .00     .00     .00     .00     .00     .00     .00     .00     .00
                        .00     .00     .00     .00     .00     .00     .00     .00     .00     .00
                        .00     .00     .00     .00     .00     .00     .00     .00     .00     .00
                        .00     .00     .00     .00     .00     .00     .00     .00     .00     .00
                        .00     .00     .00     .00     .00     .00     .00     .00     .00     .00
                        .00     .00     .00     .00     .00     .00     .00     .00     .00     .00
                        .00     .00     .00     .00     .00     .00     .00     .00

319 LG             GREEN AND AMPT LOSS RATE
                      STRTL         .23  STARTING LOSS
                        DTH         .25  MOISTURE DEFICIT
                       PSIF        4.80  WETTING FRONT SUCTION
                      XKSAT         .37  HYDRAULIC CONDUCTIVITY
                      RTIMP       37.00  PERCENT IMPERVIOUS AREA

320 UC             CLARK UNITGRAPH
                         TC        1.55  TIME OF CONCENTRATION
                          R        1.52  STORAGE COEFFICIENT

321 UA             ACCUMULATED-AREA VS. TIME,  11 ORDINATES
                         .0       5.0      16.0      30.0      65.0      77.0      84.0      90.0      94.0      97.0
                      100.0

                                                 ***

                                         UNIT HYDROGRAPH PARAMETERS
                                    CLARK   TC=  1.55 HR,        R=  1.52 HR
                                   SNYDER   TP=   .95 HR,       CP=   .39

                                              UNIT HYDROGRAPH
                                         105 END-OF-PERIOD ORDINATES
                     1.        2.        4.        7.       10.       14.       21.       27.       30.       31.
                    31.       32.       31.       31.       30.       30.       29.       28.       27.       26.
                    25.       23.       22.       21.       20.       19.       18.       17.       16.       15.
                    14.       14.       13.       12.       11.       11.       10.       10.        9.        9.
                     8.        8.        7.        7.        7.        6.        6.        6.        5.        5.
                     5.        5.        4.        4.        4.        4.        3.        3.        3.        3.
                     3.        3.        2.        2.        2.        2.        2.        2.        2.        2.
                     2.        2.        1.        1.        1.        1.        1.        1.        1.        1.
                     1.        1.        1.        1.        1.        1.        1.        1.        1.        1.
                     1.        1.        0.        0.        0.        0.        0.        0.        0.        0.
                     0.        0.        0.        0.        0.

      ***          ***          ***          ***          ***
```

HYDROGRAPH AT STATION DR59C

TOTAL RAINFALL = 3.92, TOTAL LOSS = 1.78, TOTAL EXCESS = 2.14

PEAK FLOW	TIME		MAXIMUM AVERAGE FLOW			
			6-HR	24-HR	72-HR	24.92-HR
(CFS)	(HR)	(CFS)				
45.	12.83		21.	7.	6.	6.
		(INCHES)	1.644	2.112	2.113	2.113
		(AC-FT)	10.	13.	13.	13.

CUMULATIVE AREA = .12 SQ MI

*** ***

```
          **************
          *            *
323 KK    *    DR59R   *
          *            *
          **************
```

DIVERT RETENTION VOLUME

DT	DIVERSION	ISTAD	RET59C	DIVERSION HYDROGRAPH IDENTIFICATION	
		DSTRMX	10.40	MAXIMUM VOLUME TO BE DIVERTED	
DI	INFLOW		.00	1000.00	10000.00
DQ	DIVERTED FLOW		.00	1000.00	10000.00

*** *** *** *** ***

DIVERSION HYDROGRAPH RET59C

PEAK FLOW	TIME		MAXIMUM AVERAGE FLOW			
			6-HR	24-HR	72-HR	24.92-HR
(CFS)	(HR)	(CFS)				
45.	12.83		19.	5.	5.	5.
		(INCHES)	1.501	1.667	1.667	1.667
		(AC-FT)	9.	10.	10.	10.

CUMULATIVE AREA = .12 SQ MI

*** *** *** *** ***

HYDROGRAPH AT STATION DR59R

PEAK FLOW	TIME		MAXIMUM AVERAGE FLOW			
			6-HR	24-HR	72-HR	24.92-HR
(CFS)	(HR)	(CFS)				
13.	15.67		5.	1.	1.	1.
		(INCHES)	.383	.446	.446	.446
		(AC-FT)	2.	3.	3.	3.

CUMULATIVE AREA = .12 SQ MI

*** ***

```
          **************
          *            *
328 KK    *   CDR59C   *
          *            *
          **************
```

COMBINE ROUTED FLOW FROM COMPUTATION POINT CDR57C TO RUNOFF FROM SUB-BASIN DR59C

```
331 HC          HYDROGRAPH COMBINATION
                     ICOMP           2  NUMBER OF HYDROGRAPHS TO COMBINE
```

*** *** *** *** ***

HYDROGRAPH AT STATION CDR59C

PEAK FLOW	TIME		MAXIMUM AVERAGE FLOW			
			6-HR	24-HR	72-HR	24.92-HR
(CFS)	(HR)	(CFS)				
89.	13.33		38.	11.	10.	10.
		(INCHES)	.739	.837	.837	.837

	(AC-FT)	19.	21.	21.	21.

CUMULATIVE AREA = .48 SQ MI

*** ***

```
          **************
          *            *
332 KK    *    RB259   *
          *            *
          **************
```

ROUTE FLOW FROM COMPUTATION POINT CDR59C TO COMPUTATION POINT CB259C
CROSS-SECTION REVISED TO REFLECT URBANIZED CONDITIONS
REVISED SLOPW FROM .0046 TO REFLECT A VELOCITY OF LESS THAN 4 FT/SEC

HYDROGRAPH ROUTING DATA

```
337 RS          STORAGE ROUTING
                     NSTPS           2  NUMBER OF SUBREACHES
                     ITYP        ELEV  TYPE OF INITIAL CONDITION
                    RSVRIC      -1.00  INITIAL CONDITION
                         X        .00  WORKING R AND D COEFFICIENT

338 RC          NORMAL DEPTH CHANNEL
                      ANL        .035  LEFT OVERBANK N-VALUE
                     ANCH        .020  MAIN CHANNEL N-VALUE
                      ANR        .035  RIGHT OVERBANK N-VALUE
                    RLNTH       5280.  REACH LENGTH
                      SEL       .0015  ENERGY SLOPE
                    ELMAX          .0  MAX. ELEV. FOR STORAGE/OUTFLOW CALCULATION
```

CROSS-SECTION DATA

		--- LEFT OVERBANK ---		------ MAIN CHANNEL -------		--- RIGHT OVERBANK ---		
340 RY	ELEVATION	1024.00	1023.00	1022.00	1016.00	1016.00	1022.00	1023.00	1024.00
339 RX	DISTANCE	.00	40.00	60.00	72.00	97.00	109.00	129.00	149.00

*** ***

COMPUTED STORAGE-OUTFLOW-ELEVATION DATA

STORAGE	.00	1.32	2.72	4.21	5.79	7.45	9.20	11.04	12.96	14.97
OUTFLOW	.00	17.18	55.00	109.14	178.14	261.31	358.33	469.05	593.47	731.67
ELEVATION	1016.00	1016.42	1016.84	1017.26	1017.68	1018.11	1018.53	1018.95	1019.37	1019.79
STORAGE	17.06	19.24	21.50	23.85	26.29	29.03	32.61	37.07	42.74	49.71
OUTFLOW	883.76	1049.92	1230.34	1425.24	1634.84	1891.37	2181.19	2498.89	2851.33	3246.67
ELEVATION	1020.21	1020.63	1021.05	1021.47	1021.90	1022.32	1022.74	1023.16	1023.58	1024.00

*** *** *** *** ***

HYDROGRAPH AT STATION RB259

PEAK FLOW	TIME		MAXIMUM AVERAGE FLOW			
			6-HR	24-HR	72-HR	24.92-HR
(CFS)	(HR)	(CFS)				
81.	13.83		37.	11.	10.	10.
		(INCHES)	.716	.828	.828	.828
		(AC-FT)	18.	21.	21.	21.

PEAK STORAGE	TIME	MAXIMUM AVERAGE STORAGE			
		6-HR	24-HR	72-HR	24.92-HR
(AC-FT)	(HR)				
2.	13.83	1.	0.	0.	0.

PEAK STAGE	TIME	MAXIMUM AVERAGE STAGE			
		6-HR	24-HR	72-HR	24.92-HR
(FEET)	(HR)				
1017.05	13.83	1016.62	1016.19	1016.18	1016.18

CUMULATIVE AREA = .48 SQ MI

*** ***

```
          **************
          *            *
341 KK    *    SM51C   *
          *            *
          **************
```

SUB-BASIN SM51C
24-HOUR SCS TYPE II RAINFALL WAS USED TO FIND TC & R FOR THIS BASIN
THIS BASIN USED RAINFALL REDUCTION FACTOR OF .934
L = 1.29 Kb = .045 Adj. Slope = 12.0

SUBBASIN RUNOFF DATA

346 BA SUBBASIN CHARACTERISTICS
TAREA .51 SUBBASIN AREA

PRECIPITATION DATA

32 PB STORM 3.92 BASIN TOTAL PRECIPITATION

32 PI INCREMENTAL PRECIPITATION PATTERN

.00	.00	.00	.00	.00	.00	.00	.00	.00	.00
.00	.00	.00	.00	.00	.00	.00	.00	.00	.00
.00	.00	.00	.00	.00	.00	.00	.00	.00	.00
.00	.00	.00	.00	.00	.00	.00	.00	.00	.00
.00	.00	.00	.00	.00	.00	.00	.00	.00	.00
.00	.00	.00	.00	.00	.00	.00	.00	.00	.00
.00	.00	.00	.00	.00	.00	.00	.00	.00	.00
.00	.00	.00	.00	.00	.00	.00	.00	.00	.00
.00	.00	.00	.00	.00	.00	.00	.00	.00	.00
.00	.00	.00	.00	.00	.00	.00	.00	.00	.00
.00	.00	.00	.00	.00	.00	.00	.00	.00	.00
.00	.00	.00	.00	.00	.00	.00	.00	.00	.00
.00	.00	.00	.00	.00	.00	.00	.01	.00	.01
.01	.01	.01	.01	.01	.01	.01	.01	.03	.03
.03	.09	.09	.09	.01	.01	.01	.01	.01	.01
.01	.01	.01	.01	.01	.01	.00	.00	.00	.00
.00	.00	.00	.00	.00	.00	.00	.00	.00	.00
.00	.00	.00	.00	.00	.00	.00	.00	.00	.00
.00	.00	.00	.00	.00	.00	.00	.00	.00	.00
.00	.00	.00	.00	.00	.00	.00	.00	.00	.00
.00	.00	.00	.00	.00	.00	.00	.00	.00	.00
.00	.00	.00	.00	.00	.00	.00	.00	.00	.00
.00	.00	.00	.00	.00	.00	.00	.00	.00	.00
.00	.00	.00	.00	.00	.00	.00	.00	.00	.00
.00	.00	.00	.00	.00	.00	.00	.00	.00	.00
.00	.00	.00	.00	.00	.00	.00	.00	.00	.00
.00	.00	.00	.00	.00	.00	.00	.00	.00	.00
.00	.00	.00	.00	.00	.00	.00	.00	.00	.00
.00	.00	.00	.00	.00	.00	.00	.00		

347 LG GREEN AND AMPT LOSS RATE
STRTL .29 STARTING LOSS
DTH .25 MOISTURE DEFICIT
PSIF 5.20 WETTING FRONT SUCTION
XKSAT .29 HYDRAULIC CONDUCTIVITY
RTIMP 17.00 PERCENT IMPERVIOUS AREA

348 UC CLARK UNITGRAPH
TC 1.05 TIME OF CONCENTRATION
R .70 STORAGE COEFFICIENT

349 UA ACCUMULATED-AREA VS. TIME, 11 ORDINATES

.0	5.0	16.0	30.0	65.0	77.0	84.0	90.0	94.0	97.0
100.0									

***

UNIT HYDROGRAPH PARAMETERS
CLARK TC= 1.05 HR, R= .70 HR
SNYDER TP= .58 HR, CP= .46

UNIT HYDROGRAPH
51 END-OF-PERIOD ORDINATES

9.	33.	67.	113.	194.	257.	266.	263.	255.	244.
229.	214.	199.	180.	160.	142.	126.	112.	100.	89.
79.	70.	62.	55.	49.	44.	39.	34.	31.	27.
24.	21.	19.	17.	15.	13.	12.	11.	9.	8.
7.	7.	6.	5.	5.	4.	4.	3.	3.	3.
2.									

*** *** *** *** ***

HYDROGRAPH AT STATION SM51C

TOTAL RAINFALL = 3.92, TOTAL LOSS = 2.28, TOTAL EXCESS = 1.64

PEAK FLOW (CFS)	TIME (HR)		MAXIMUM AVERAGE FLOW 6-HR	24-HR	72-HR	24.92-HR
327.	12.42	(CFS)	79.	22.	22.	22.
		(INCHES)	1.441	1.633	1.635	1.635
		(AC-FT)	39.	45.	45.	45.

CUMULATIVE AREA = .51 SQ MI

*** ***

****
*   *
351 KK * SM51R *
*   *
****

DIVERT RETENTION VOLUME

DT DIVERSION
ISTAD RET51C DIVERSION HYDROGRAPH IDENTIFICATION
DSTRMX 23.00 MAXIMUM VOLUME TO BE DIVERTED

DI INFLOW .00 1000.00 10000.00

DQ DIVERTED FLOW .00 1000.00 10000.00

***

*** *** *** *** ***

DIVERSION HYDROGRAPH RET51C

PEAK FLOW (CFS)	TIME (HR)		MAXIMUM AVERAGE FLOW 6-HR	24-HR	72-HR	24.92-HR
327.	12.42	(CFS)	44.	12.	11.	11.
		(INCHES)	.792	.844	.844	.844
		(AC-FT)	22.	23.	23.	23.

CUMULATIVE AREA = .51 SQ MI

*** *** *** *** ***

HYDROGRAPH AT STATION SM51R

PEAK FLOW (CFS)	TIME (HR)		MAXIMUM AVERAGE FLOW 6-HR	24-HR	72-HR	24.92-HR
248.	12.92	(CFS)	40.	11.	10.	10.
		(INCHES)	.737	.791	.791	.791
		(AC-FT)	20.	22.	22.	22.

CUMULATIVE AREA = .51 SQ MI

*** ***

****
*   *
356 KK * RB2591 *
*   *
****

ROUTE FLOW FROM COMPUTATION POINT CS51C TO COMPUTATION POINT CB259C
FIRST REACH
CROSS-SECTION REVISED TO REFLECT DEVELOPED CONDITIONS

HYDROGRAPH ROUTING DATA

360 RS STORAGE ROUTING
NSTPS 3 NUMBER OF SUBREACHES
ITYP ELEV TYPE OF INITIAL CONDITION
RSVRIC -1.00 INITIAL CONDITION
X .00 WORKING R AND D COEFFICIENT

361 RC NORMAL DEPTH CHANNEL
ANL .035 LEFT OVERBANK N-VALUE
ANCH .035 MAIN CHANNEL N-VALUE
ANR .035 RIGHT OVERBANK N-VALUE
RLNTH 4200. REACH LENGTH
SEL .0036 ENERGY SLOPE
ELMAX .0 MAX. ELEV. FOR STORAGE/OUTFLOW CALCULATION

CROSS-SECTION DATA

		--- LEFT OVERBANK ---		------ MAIN CHANNEL -------			--- RIGHT OVERBANK ---		
363 RY	ELEVATION	1030.00	1029.00	1028.00	1025.00	1025.00	1028.00	1029.00	1030.00
362 RX	DISTANCE	.00	40.00	60.00	65.00	75.00	80.00	100.00	140.00

***

COMPUTED STORAGE-OUTFLOW-ELEVATION DATA

STORAGE	.00	.26	.55	.86	1.19	1.55	1.92	2.32	2.74	3.19
OUTFLOW	.00	2.78	8.91	17.71	28.98	42.65	58.68	77.09	97.89	121.14
ELEVATION	1025.00	1025.26	1025.53	1025.79	1026.05	1026.32	1026.58	1026.84	1027.11	1027.37
STORAGE	3.65	4.14	4.69	5.49	6.56	7.90	9.59	11.81	14.56	17.84
OUTFLOW	146.87	175.14	209.81	252.33	303.06	364.07	434.17	521.98	631.71	766.56
ELEVATION	1027.63	1027.90	1028.16	1028.42	1028.68	1028.95	1029.21	1029.47	1029.74	1030.00

*** *** *** *** ***

HYDROGRAPH AT STATION RB2591

PEAK FLOW (CFS)	TIME (HR)		MAXIMUM AVERAGE FLOW 6-HR	24-HR	72-HR	24.92-HR

```
                                 (CFS)
     198.      13.25                          40.          11.          10.          10.
                              (INCHES)      .725         .783         .783         .783
                               (AC-FT)       20.          21.          21.          21.

   PEAK STORAGE    TIME                            MAXIMUM AVERAGE STORAGE
                                          6-HR         24-HR        72-HR     24.92-HR
     (AC-FT)       (HR)
          2.      13.25                      0.           0.           0.           0.

   PEAK STAGE      TIME                             MAXIMUM AVERAGE STAGE
                                          6-HR         24-HR        72-HR     24.92-HR
     (FEET)        (HR)
    1028.07       13.25                 1026.03      1025.33      1025.32      1025.32

                              CUMULATIVE AREA =       .51 SQ MI


*** *** *** *** *** *** *** *** *** *** *** *** *** *** *** *** *** *** *** *** *** *** *** *** *** *** *** *** *** *** *** *** ***

               **************
               *            *
 364 KK        *   RB2592   *
               *            *
               **************
                             ROUTE FLOW FROM COMPUTATION POINT CS51C TO COMPUTATION POINT CB259C
                             2ND REACH
                             CROSS-SECTION REVISED TO REFLECT DEVELOPED CONDITIONS

                     HYDROGRAPH ROUTING DATA

 368 RS                 STORAGE ROUTING
                          NSTPS          3  NUMBER OF SUBREACHES
                           ITYP       ELEV  TYPE OF INITIAL CONDITION
                         RSVRIC      -1.00  INITIAL CONDITION
                              X        .00  WORKING R AND D COEFFICIENT

 369 RC                 NORMAL DEPTH CHANNEL
                            ANL       .035  LEFT OVERBANK N-VALUE
                           ANCH       .035  MAIN CHANNEL N-VALUE
                            ANR       .035  RIGHT OVERBANK N-VALUE
                          RLNTH      3000.  REACH LENGTH
                            SEL      .0063  ENERGY SLOPE
                          ELMAX         .0  MAX. ELEV. FOR STORAGE/OUTFLOW CALCULATION

                                                  CROSS-SECTION DATA
                                 --- LEFT OVERBANK ---   ------ MAIN CHANNEL -------   --- RIGHT OVERBANK ---
 371 RY          ELEVATION   1006.00   1005.00   1004.00   1001.00   1001.00   1004.00   1005.00   1006.00
 370 RX           DISTANCE       .00     40.00     60.00     65.00     75.00     80.00    100.00    140.00

                                                            ***

                                                    COMPUTED STORAGE-OUTFLOW-ELEVATION DATA

                STORAGE        .00        .19        .39        .62        .85       1.11       1.37       1.66       1.96       2.28
                OUTFLOW        .00       3.68      11.78      23.43      38.34      56.42      77.63     101.98     129.50     160.26
              ELEVATION    1001.00    1001.26    1001.53    1001.79    1002.05    1002.32    1002.58    1002.84    1003.11    1003.37

                STORAGE       2.61       2.96       3.35       3.92       4.69       5.64       6.85       8.43      10.40      12.75
                OUTFLOW     194.30     231.69     277.56     333.81     400.92     481.62     574.35     690.52     835.67    1014.06
              ELEVATION    1003.63    1003.90    1004.16    1004.42    1004.68    1004.95    1005.21    1005.47    1005.74    1006.00

*** WARNING *** MODIFIED PULS ROUTING MAY BE NUMERICALLY UNSTABLE FOR OUTFLOWS BETWEEN      130. TO      334.
                THE ROUTED HYDROGRAPH SHOULD BE EXAMINED FOR OSCILLATIONS OR OUTFLOWS GREATER THAN PEAK INFLOWS.
                THIS CAN BE CORRECTED BY DECREASING THE TIME INTERVAL OR INCREASING STORAGE (USE A LONGER REACH.)

       ***            ***            ***            ***            ***

                             HYDROGRAPH AT STATION    RB2592

   PEAK FLOW       TIME                             MAXIMUM AVERAGE FLOW
                                          6-HR         24-HR        72-HR     24.92-HR
     (CFS)         (HR)
                                 (CFS)
     190.      13.42                          40.          11.          10.          10.
                              (INCHES)      .720         .778         .778         .778
                               (AC-FT)       20.          21.          21.          21.

   PEAK STORAGE    TIME                            MAXIMUM AVERAGE STORAGE
                                          6-HR         24-HR        72-HR     24.92-HR
     (AC-FT)       (HR)
          1.      13.42                      0.           0.           0.           0.

   PEAK STAGE      TIME                             MAXIMUM AVERAGE STAGE
                                          6-HR         24-HR        72-HR     24.92-HR
     (FEET)        (HR)
    1003.60       13.42                 1001.89      1001.28      1001.27      1001.27

                              CUMULATIVE AREA =       .51 SQ MI
```



```
*** *** *** *** *** *** *** *** *** *** *** *** *** *** *** *** *** *** *** *** *** *** *** *** *** *** *** *** *** *** *** *** ***

               **************
               *            *
 372 KK        *   BR259C   *
               *            *
               **************
                       SUB-BASIN BR259C
                       24-HOUR SCS TYPE II RAINFALL WAS USED TO FIND TC & R FOR THIS BASIN
                       THIS BASIN USED RAINFALL REDUCTION FACTOR OF  .934
                         L = 1.90  Kb = .037  Adj. Slope =   19.0

                SUBBASIN RUNOFF DATA

 377 BA           SUBBASIN CHARACTERISTICS
                        TAREA        1.01  SUBBASIN AREA

                  PRECIPITATION DATA

  32 PB                 STORM        3.92  BASIN TOTAL PRECIPITATION

  32 PI             INCREMENTAL PRECIPITATION PATTERN
                        .00       .00       .00       .00       .00       .00       .00       .00       .00       .00
                        .00       .00       .00       .00       .00       .00       .00       .00       .00       .00
                        .00       .00       .00       .00       .00       .00       .00       .00       .00       .00
                        .00       .00       .00       .00       .00       .00       .00       .00       .00       .00
                        .00       .00       .00       .00       .00       .00       .00       .00       .00       .00
                        .00       .00       .00       .00       .00       .00       .00       .00       .00       .00
                        .00       .00       .00       .00       .00       .00       .00       .00       .00       .00
                        .00       .00       .00       .00       .00       .00       .00       .00       .00       .00
                        .00       .00       .00       .00       .00       .00       .00       .00       .00       .00
                        .00       .00       .00       .00       .00       .00       .00       .00       .00       .00
                        .00       .00       .00       .00       .00       .00       .00       .00       .00       .00
                        .00       .00       .00       .00       .00       .00       .00       .00       .00       .00
                        .00       .00       .00       .00       .00       .00       .00       .01       .00       .01
                        .01       .01       .01       .01       .01       .01       .01       .01       .03       .03
                        .03       .09       .09       .09       .01       .01       .01       .01       .01       .01
                        .01       .01       .01       .01       .01       .01       .00       .00       .00       .00
                        .00       .00       .00       .00       .00       .00       .00       .00       .00       .00
                        .00       .00       .00       .00       .00       .00       .00       .00       .00       .00
                        .00       .00       .00       .00       .00       .00       .00       .00       .00       .00
                        .00       .00       .00       .00       .00       .00       .00       .00       .00       .00
                        .00       .00       .00       .00       .00       .00       .00       .00       .00       .00
                        .00       .00       .00       .00       .00       .00       .00       .00       .00       .00
                        .00       .00       .00       .00       .00       .00       .00       .00       .00       .00
                        .00       .00       .00       .00       .00       .00       .00       .00       .00       .00
                        .00       .00       .00       .00       .00       .00       .00       .00       .00       .00
                        .00       .00       .00       .00       .00       .00       .00       .00       .00       .00
                        .00       .00       .00       .00       .00       .00       .00       .00       .00       .00
                        .00       .00       .00       .00       .00       .00       .00       .00       .00       .00
                        .00       .00       .00       .00       .00       .00       .00       .00

 378 LG             GREEN AND AMPT LOSS RATE
                        STRTL         .23  STARTING LOSS
                          DTH         .25  MOISTURE DEFICIT
                         PSIF        4.80  WETTING FRONT SUCTION
                        XKSAT         .36  HYDRAULIC CONDUCTIVITY
                        RTIMP       33.00  PERCENT IMPERVIOUS AREA

 379 UC             CLARK UNITGRAPH
                           TC         .95  TIME OF CONCENTRATION
                            R         .58  STORAGE COEFFICIENT

 380 UA             ACCUMULATED-AREA VS. TIME,  11 ORDINATES
                         .0       5.0      16.0      30.0      65.0      77.0      84.0      90.0      94.0      97.0
                      100.0

                                                   ***

                                          UNIT HYDROGRAPH PARAMETERS
                                    CLARK   TC=   .95 HR,        R=   .58 HR
                                   SNYDER   TP=   .50 HR,       CP=   .47

                                              UNIT HYDROGRAPH
                                          42 END-OF-PERIOD ORDINATES
                   23.        89.       183.       337.       526.       620.       617.       593.       560.       518.
                  477.       433.       382.       331.       287.       248.       215.       187.       162.       140.
                  121.       105.        91.        79.        68.        59.        51.        45.        39.        33.
                   29.        25.        22.        19.        16.        14.        12.        11.         9.         8.
                    7.         6.

       ***            ***            ***            ***            ***

                             HYDROGRAPH AT STATION    BR259C

   TOTAL RAINFALL =     3.92, TOTAL LOSS =     1.88, TOTAL EXCESS =     2.04

   PEAK FLOW       TIME                             MAXIMUM AVERAGE FLOW
                                          6-HR         24-HR        72-HR     24.92-HR
     (CFS)         (HR)
                                 (CFS)
     778.      12.42                         180.          55.          53.          53.
                              (INCHES)     1.651        2.023        2.026        2.026
                               (AC-FT)       89.         109.         109.         109.
```

CUMULATIVE AREA = 1.01 SQ MI

*** ***

382 KK — BR259R

DIVERT RETENTION VOLUME
RELAXED RETENTION VOLUME FROM 68.3 AC-FT.

DT DIVERSION
ISTAD RET259 DIVERSION HYDROGRAPH IDENTIFICATION
DSTRMX 67.00 MAXIMUM VOLUME TO BE DIVERTED

DI INFLOW .00 1000.00 10000.00

DQ DIVERTED FLOW .00 1000.00 10000.00

***

DIVERSION HYDROGRAPH RET259

PEAK FLOW	TIME		MAXIMUM AVERAGE FLOW 6-HR	24-HR	72-HR	24.92-HR
(CFS)	(HR)					
		(CFS)				
778.	12.42		124.	34.	33.	33.
		(INCHES)	1.136	1.241	1.241	1.241
		(AC-FT)	61.	67.	67.	67.

CUMULATIVE AREA = 1.01 SQ MI

***

HYDROGRAPH AT STATION BR259R

PEAK FLOW	TIME		MAXIMUM AVERAGE FLOW 6-HR	24-HR	72-HR	24.92-HR
(CFS)	(HR)					
		(CFS)				
456.	13.00		74.	21.	21.	21.
		(INCHES)	.684	.784	.784	.784
		(AC-FT)	37.	42.	42.	42.

CUMULATIVE AREA = 1.01 SQ MI

*** ***

388 KK — CB259A

COMBINE ROUTED FLOW FROM COMPUTATION POINT CDR59C TO PREVIOUSLY
COMPUTED FLOW AT COMPUTATION POINT CB1592

391 HC HYDROGRAPH COMBINATION
ICOMP 2 NUMBER OF HYDROGRAPHS TO COMBINE

***

HYDROGRAPH AT STATION CB259A

PEAK FLOW	TIME		MAXIMUM AVERAGE FLOW 6-HR	24-HR	72-HR	24.92-HR
(CFS)	(HR)					
		(CFS)				
474.	13.33		114.	32.	31.	31.
		(INCHES)	.695	.782	.782	.782
		(AC-FT)	56.	64.	64.	64.

CUMULATIVE AREA = 1.52 SQ MI

*** ***

392 KK — CB259S

COMBINE FLOWS FROM THE SOUTH AT 59TH AVENUE

394 HC HYDROGRAPH COMBINATION
ICOMP 2 NUMBER OF HYDROGRAPHS TO COMBINE

***

HYDROGRAPH AT STATION CB259S

PEAK FLOW	TIME		MAXIMUM AVERAGE FLOW 6-HR	24-HR	72-HR	24.92-HR
(CFS)	(HR)					
		(CFS)				
523.	13.33		151.	43.	41.	41.
		(INCHES)	.699	.793	.793	.793
		(AC-FT)	75.	85.	85.	85.

CUMULATIVE AREA = 2.00 SQ MI

*** ***

395 KK — CB259

COMBINE NORTH AND SOUTH FLOWS

397 HC HYDROGRAPH COMBINATION
ICOMP 2 NUMBER OF HYDROGRAPHS TO COMBINE

***

HYDROGRAPH AT STATION CB259

PEAK FLOW	TIME		MAXIMUM AVERAGE FLOW 6-HR	24-HR	72-HR	24.92-HR
(CFS)	(HR)					
		(CFS)				
763.	13.67		369.	121.	117.	117.
		(INCHES)	.470	.617	.617	.617
		(AC-FT)	183.	240.	240.	240.

CUMULATIVE AREA = 7.30 SQ MI

*** ***

398 KK — RBR163

ROUTE FLOW FROM COMPUTATION POINT CB1591 TO COMPUTATION POINT CB163C
MARICOPA DRAIN FROM 59TH AVE. TO 63RD AVE.
ADJUST THE SLOPE FROM .0011 TO REFLECT A VELOCITY OF LESS THAN 5 FT/SEC

HYDROGRAPH ROUTING DATA

402 RS STORAGE ROUTING
NSTPS 2 NUMBER OF SUBREACHES
ITYP ELEV TYPE OF INITIAL CONDITION
RSVRIC -1.00 INITIAL CONDITION
X .00 WORKING R AND D COEFFICIENT

403 RC NORMAL DEPTH CHANNEL
ANL .030 LEFT OVERBANK N-VALUE
ANCH .030 MAIN CHANNEL N-VALUE
ANR .030 RIGHT OVERBANK N-VALUE
RLNTH 2640. REACH LENGTH
SEL .0009 ENERGY SLOPE
ELMAX .0 MAX. ELEV. FOR STORAGE/OUTFLOW CALCULATION

CROSS-SECTION DATA

		--- LEFT OVERBANK ---		------ MAIN CHANNEL -------			--- RIGHT OVERBANK ---	
405 RY	ELEVATION	997.80	997.70	997.60	992.60	992.60	997.60	997.70	997.80
404 RX	DISTANCE	.00	10.00	20.00	45.00	135.00	160.00	170.00	180.00

***

COMPUTED STORAGE-OUTFLOW-ELEVATION DATA

```
        STORAGE      .00     1.52     3.08     4.68     6.33     8.03     9.77    11.56    13.40    15.27
        OUTFLOW      .00    15.54    49.60    98.00   159.15   232.14   316.38   411.46   517.10   633.10
      ELEVATION   992.60   992.87   993.15   993.42   993.69   993.97   994.24   994.52   994.79   995.06

        STORAGE    17.20    19.17    21.18    23.24    25.35    27.50    29.70    31.94    34.22    36.79
        OUTFLOW   759.30   895.61  1041.96  1198.29  1364.60  1540.88  1727.13  1923.38  2129.66  2368.55
      ELEVATION   995.34   995.61   995.88   996.16   996.43   996.71   996.98   997.25   997.53   997.80

    ***             ***             ***             ***             ***

                          HYDROGRAPH AT STATION   RBR163

 PEAK FLOW      TIME                        MAXIMUM AVERAGE FLOW
                                   6-HR       24-HR       72-HR      24.92-HR
   (CFS)        (HR)
                          (CFS)
   726.        14.00                366.        119.        115.        115.
                        (INCHES)    .466        .606        .606        .606
                         (AC-FT)    181.        236.        236.        236.

 PEAK STORAGE   TIME                       MAXIMUM AVERAGE STORAGE
                                   6-HR       24-HR       72-HR      24.92-HR
  (AC-FT)       (HR)
      8.       14.00                  5.          2.          2.          2.

 PEAK STAGE     TIME                        MAXIMUM AVERAGE STAGE
                                   6-HR       24-HR       72-HR      24.92-HR
  (FEET)        (HR)
  995.26       14.00              994.32      993.27      993.24      993.24

                        CUMULATIVE AREA =     7.30 SQ MI


*** *** *** *** *** *** *** *** *** *** *** *** *** *** *** *** *** *** *** *** *** *** *** *** *** *** *** *** *** *** *** *** *** ***


          **************
          *            *
 406 KK   *   BR263C   *
          *            *
          **************
                      SUB-BASIN BR263C
                      24-HOUR SCS TYPE II RAINFALL WAS USED TO FIND TC & R FOR THIS BASIN
                      THIS BASIN USED RAINFALL REDUCTION FACTOR OF  .934
                        L = 1.45  Kb = .057  Adj. Slope =   19.0

            SUBBASIN RUNOFF DATA

 411 BA       SUBBASIN CHARACTERISTICS
                    TAREA        .49  SUBBASIN AREA

              PRECIPITATION DATA

  32 PB             STORM       3.92  BASIN TOTAL PRECIPITATION

  32 PI         INCREMENTAL PRECIPITATION PATTERN
                    .00      .00      .00      .00      .00      .00      .00      .00      .00      .00
                    .00      .00      .00      .00      .00      .00      .00      .00      .00      .00
                    .00      .00      .00      .00      .00      .00      .00      .00      .00      .00
                    .00      .00      .00      .00      .00      .00      .00      .00      .00      .00
                    .00      .00      .00      .00      .00      .00      .00      .00      .00      .00
                    .00      .00      .00      .00      .00      .00      .00      .00      .00      .00
                    .00      .00      .00      .00      .00      .00      .00      .00      .00      .00
                    .00      .00      .00      .00      .00      .00      .00      .00      .00      .00
                    .00      .00      .00      .00      .00      .00      .00      .00      .00      .00
                    .00      .00      .00      .00      .00      .00      .00      .00      .00      .00
                    .00      .00      .00      .00      .00      .00      .00      .00      .00      .00
                    .00      .00      .00      .00      .00      .00      .00      .00      .00      .00
                    .00      .00      .00      .00      .00      .00      .00      .01      .00      .01
                    .01      .01      .01      .01      .01      .01      .01      .01      .03      .03
                    .03      .09      .09      .09      .01      .01      .01      .01      .01      .01
                    .01      .01      .01      .01      .01      .01      .00      .00      .00      .00
                    .00      .00      .00      .00      .00      .00      .00      .00      .00      .00
                    .00      .00      .00      .00      .00      .00      .00      .00      .00      .00
                    .00      .00      .00      .00      .00      .00      .00      .00      .00      .00
                    .00      .00      .00      .00      .00      .00      .00      .00      .00      .00
                    .00      .00      .00      .00      .00      .00      .00      .00      .00      .00
                    .00      .00      .00      .00      .00      .00      .00      .00      .00      .00
                    .00      .00      .00      .00      .00      .00      .00      .00      .00      .00
                    .00      .00      .00      .00      .00      .00      .00      .00      .00      .00
                    .00      .00      .00      .00      .00      .00      .00      .00      .00      .00
                    .00      .00      .00      .00      .00      .00      .00      .00      .00      .00
                    .00      .00      .00      .00      .00      .00      .00      .00      .00      .00
                    .00      .00      .00      .00      .00      .00      .00      .00      .00      .00
                    .00      .00      .00      .00      .00      .00      .00      .00

 412 LG       GREEN AND AMPT LOSS RATE
                    STRTL        .11  STARTING LOSS
                      DTH        .25  MOISTURE DEFICIT
                     PSIF       4.70  WETTING FRONT SUCTION
                    XKSAT        .48  HYDRAULIC CONDUCTIVITY
                    RTIMP      38.00  PERCENT IMPERVIOUS AREA
```



```
 413 UC       CLARK UNITGRAPH
                       TC       1.10  TIME OF CONCENTRATION
                        R        .83  STORAGE COEFFICIENT

 414 UA       ACCUMULATED-AREA VS. TIME,  11 ORDINATES
                   .0      5.0     16.0     30.0     65.0     77.0     84.0     90.0     94.0     97.0
                100.0

                                            ***

                                   UNIT HYDROGRAPH PARAMETERS
                              CLARK    TC=  1.10 HR,         R=   .83 HR
                             SYNDER    TP=   .61 HR,        CP=   .43

                                        UNIT HYDROGRAPH
                                   59 END-OF-PERIOD ORDINATES
              7.        26.        52.        84.       144.       205.       225.       227.       223.       217.
            207.       196.       186.       173.       158.       143.       129.       117.       106.        96.
             86.        78.        71.        64.        58.        52.        47.        43.        39.        35.
             32.        29.        26.        23.        21.        19.        17.        16.        14.        13.
             12.        11.         9.         9.         8.         7.         6.         6.         5.         5.
              4.         4.         3.         3.         3.         3.         2.         2.         2.

    ***             ***             ***             ***             ***

                          HYDROGRAPH AT STATION   BR263C

   TOTAL RAINFALL =     3.92, TOTAL LOSS =     1.80, TOTAL EXCESS =     2.12

 PEAK FLOW      TIME                        MAXIMUM AVERAGE FLOW
                                   6-HR       24-HR       72-HR      24.92-HR
   (CFS)        (HR)
                          (CFS)
   294.        12.50                 89.         28.         27.         27.
                        (INCHES)   1.671       2.104       2.106       2.106
                         (AC-FT)     44.         55.         55.         55.

                        CUMULATIVE AREA =      .49 SQ MI


*** *** *** *** *** *** *** *** *** *** *** *** *** *** *** *** *** *** *** *** *** *** *** *** *** *** *** *** *** *** *** *** *** ***


          **************
          *            *
 416 KK   *   BR263R   *
          *            *
          **************
                      DIVERT RETENTION VOLUME
                      RELAXED RETENTION VOLUME FROM 32.0 AC-FT.

  DT          DIVERSION
                    ISTAD     RET263  DIVERSION HYDROGRAPH IDENTIFICATION
                   DSTRMX      29.30  MAXIMUM VOLUME TO BE DIVERTED

  DI             INFLOW          .00  1000.00  10000.00

  DQ     DIVERTED FLOW           .00  1000.00  10000.00

                                            ***

    ***             ***             ***             ***             ***

                          DIVERSION HYDROGRAPH   RET263

 PEAK FLOW      TIME                        MAXIMUM AVERAGE FLOW
                                   6-HR       24-HR       72-HR      24.92-HR
   (CFS)        (HR)
                          (CFS)
   294.        12.50                 53.         15.         14.         14.
                        (INCHES)    .996       1.112       1.112       1.112
                         (AC-FT)     26.         29.         29.         29.

                        CUMULATIVE AREA =      .49 SQ MI

    ***             ***             ***             ***             ***

                          HYDROGRAPH AT STATION   BR263R

 PEAK FLOW      TIME                        MAXIMUM AVERAGE FLOW
                                   6-HR       24-HR       72-HR      24.92-HR
   (CFS)        (HR)
                          (CFS)
   218.        13.08                 47.         13.         13.         13.
                        (INCHES)    .876        .994        .994        .994
                         (AC-FT)     23.         26.         26.         26.

                        CUMULATIVE AREA =      .49 SQ MI
```

```
*** *** *** *** *** *** *** *** *** *** *** *** *** *** *** *** *** *** *** *** *** *** *** *** *** *** *** *** *** *** *** *** *** ***

            **************
            *            *
422 KK      *    63S     *
            *            *
            **************

                COMBINE ROUTED FLOW FROM COMPUTATION POINT CB159C WITH RUNOFF FROM SUB-BASINS
                BR163C AND BR263C AND ROUTED FLOW FROM COMPUTATION POINT  CB259C

425 HC        HYDROGRAPH COMBINATION
                 ICOMP          2  NUMBER OF HYDROGRAPHS TO COMBINE

                                                                    ***

       ***           ***            ***            ***            ***

                 HYDROGRAPH AT STATION      63S

PEAK FLOW     TIME                      MAXIMUM AVERAGE FLOW
                                6-HR       24-HR       72-HR      24.92-HR
  (CFS)       (HR)
                       (CFS)
   824.      13.92               412.       132.        127.        127.
                    (INCHES)    .491        .631        .631        .631
                     (AC-FT)    204.        262.        262.        262.

                 CUMULATIVE AREA =    7.79 SQ MI

*** *** *** *** *** *** *** *** *** *** *** *** *** *** *** *** *** *** *** *** *** *** *** *** *** *** *** *** *** *** *** *** *** ***

            **************
            *            *
426 KK      *   BR163C   *
            *            *
            **************
                SUB-BASIN BR163C
                24-HOUR SCS TYPE II RAINFALL WAS USED TO FIND TC & R FOR THIS BASIN
                THIS BASIN USED RAINFALL REDUCTION FACTOR OF  .934
                   L =  .91  Kb = .040  Adj. Slope =       9.0

          SUBBASIN RUNOFF DATA

431 BA        SUBBASIN CHARACTERISTICS
                 TAREA          .25  SUBBASIN AREA

              PRECIPITATION DATA

 32 PB           STORM         3.92  BASIN TOTAL PRECIPITATION

 32 PI          INCREMENTAL PRECIPITATION PATTERN
                    .00       .00       .00       .00       .00       .00       .00       .00       .00       .00
                    .00       .00       .00       .00       .00       .00       .00       .00       .00       .00
                    .00       .00       .00       .00       .00       .00       .00       .00       .00       .00
                    .00       .00       .00       .00       .00       .00       .00       .00       .00       .00
                    .00       .00       .00       .00       .00       .00       .00       .00       .00       .00
                    .00       .00       .00       .00       .00       .00       .00       .00       .00       .00
                    .00       .00       .00       .00       .00       .00       .00       .00       .00       .00
                    .00       .00       .00       .00       .00       .00       .00       .00       .00       .00
                    .00       .00       .00       .00       .00       .00       .00       .00       .00       .00
                    .00       .00       .00       .00       .00       .00       .00       .00       .00       .00
                    .00       .00       .00       .00       .00       .00       .00       .00       .00       .00
                    .00       .00       .00       .00       .00       .00       .00       .00       .00       .00
                    .00       .00       .00       .00       .00       .00       .00       .01       .00       .01
                    .01       .01       .01       .01       .01       .01       .01       .01       .03       .03
                    .03       .09       .09       .09       .01       .01       .01       .01       .01       .01
                    .01       .01       .01       .01       .01       .01       .00       .00       .00       .00
                    .00       .00       .00       .00       .00       .00       .00       .00       .00       .00
                    .00       .00       .00       .00       .00       .00       .00       .00       .00       .00
                    .00       .00       .00       .00       .00       .00       .00       .00       .00       .00
                    .00       .00       .00       .00       .00       .00       .00       .00       .00       .00
                    .00       .00       .00       .00       .00       .00       .00       .00       .00       .00
                    .00       .00       .00       .00       .00       .00       .00       .00       .00       .00
                    .00       .00       .00       .00       .00       .00       .00       .00       .00       .00
                    .00       .00       .00       .00       .00       .00       .00       .00       .00       .00
                    .00       .00       .00       .00       .00       .00       .00       .00       .00       .00
                    .00       .00       .00       .00       .00       .00       .00       .00       .00       .00
                    .00       .00       .00       .00       .00       .00       .00       .00       .00       .00
                    .00       .00       .00       .00       .00       .00       .00       .00       .00       .00
                    .00       .00       .00       .00       .00       .00       .00       .00

432 LG        GREEN AND AMPT LOSS RATE
                 STRTL          .22  STARTING LOSS
                   DTH          .25  MOISTURE DEFICIT
                  PSIF         5.40  WETTING FRONT SUCTION
                 XKSAT          .24  HYDRAULIC CONDUCTIVITY
                 RTIMP        21.00  PERCENT IMPERVIOUS AREA

433 UC        CLARK UNITGRAPH
                    TC          .81  TIME OF CONCENTRATION
                     R          .59  STORAGE COEFFICIENT
```



```
434 UA          ACCUMULATED-AREA VS. TIME,  11 ORDINATES
                      .0       5.0      16.0      30.0      65.0      77.0      84.0      90.0      94.0      97.0
                   100.0

                                                        ***

                                          UNIT HYDROGRAPH PARAMETERS
                                   CLARK   TC=   .81 HR,        R=   .59 HR
                                  SNYDER   TP=   .44 HR,       CP=   .44

                                               UNIT HYDROGRAPH
                                          42 END-OF-PERIOD ORDINATES
                  7.       28.       61.      117.      160.      163.      158.      150.      139.      128.
                114.       99.       86.       74.       65.       56.       49.       42.       37.       32.
                 28.       24.       21.       18.       16.       14.       12.       10.        9.        8.
                  7.        6.        5.        4.        4.        3.        3.        2.        2.        2.
                  2.        1.

       ***           ***            ***            ***            ***

                 HYDROGRAPH AT STATION    BR163C

   TOTAL RAINFALL =    3.92, TOTAL LOSS =    2.10, TOTAL EXCESS =    1.82

PEAK FLOW     TIME                      MAXIMUM AVERAGE FLOW
                                6-HR       24-HR       72-HR      24.92-HR
  (CFS)       (HR)
                       (CFS)
   208.      12.33                43.        12.         12.         12.
                    (INCHES)    1.570       1.807       1.809       1.809
                     (AC-FT)     21.         25.         25.         25.

                 CUMULATIVE AREA =    .25 SQ MI

*** *** *** *** *** *** *** *** *** *** *** *** *** *** *** *** *** *** *** *** *** *** *** *** *** *** *** *** *** *** *** *** *** ***

            **************
            *            *
436 KK      *   BR163R   *
            *            *
            **************
                       DIVERT RETENTION VOLUME

  DT          DIVERSION
                 ISTAD       RET163  DIVERSION HYDROGRAPH IDENTIFICATION
                DSTRMX         6.60  MAXIMUM VOLUME TO BE DIVERTED

  DI             INFLOW         .00   1000.00  10000.00

  DQ       DIVERTED FLOW        .00   1000.00  10000.00

                                                        ***

       ***           ***            ***            ***            ***

                 DIVERSION HYDROGRAPH    RET163

PEAK FLOW     TIME                      MAXIMUM AVERAGE FLOW
                                6-HR       24-HR       72-HR      24.92-HR
  (CFS)       (HR)
                       (CFS)
   163.      12.17                12.          3.          3.          3.
                    (INCHES)     .427        .485        .485        .485
                     (AC-FT)      6.          7.          7.          7.

                 CUMULATIVE AREA =    .25 SQ MI

       ***           ***            ***            ***            ***

                 HYDROGRAPH AT STATION    BR163R

PEAK FLOW     TIME                      MAXIMUM AVERAGE FLOW
                                6-HR       24-HR       72-HR      24.92-HR
  (CFS)       (HR)
                       (CFS)
   208.      12.33                34.          9.          9.          9.
                    (INCHES)    1.250       1.323       1.323       1.323
                     (AC-FT)     17.         18.         18.         18.

                 CUMULATIVE AREA =    .25 SQ MI

*** *** *** *** *** *** *** *** *** *** *** *** *** *** *** *** *** *** *** *** *** *** *** *** *** *** *** *** *** *** *** *** *** ***

            **************
            *            *
441 KK      *    CB163   *
```

COMBINE FLOWS ON THE SOUTH SIDE OF BASELINE

443 HC HYDROGRAPH COMBINATION
ICOMP 2 NUMBER OF HYDROGRAPHS TO COMBINE

HYDROGRAPH AT STATION CB163

PEAK FLOW (CFS)	TIME (HR)		MAXIMUM AVERAGE FLOW 6-HR	24-HR	72-HR	24.92-HR
852.	13.92	(CFS)	430.	141.	136.	136.
		(INCHES)	.497	.653	.653	.653
		(AC-FT)	213.	280.	280.	280.

CUMULATIVE AREA = 8.05 SQ MI

444 KK RCD1C

ROUTE FLOW FROM COMPUTATION POINT CB163C TO COMPUTATION POINT CPCD1C
MARICOPA DRAIN FROM 63RD AVE TO 67TH AVE.

HYDROGRAPH ROUTING DATA

447 RS STORAGE ROUTING
NSTPS 2 NUMBER OF SUBREACHES
ITYP ELEV TYPE OF INITIAL CONDITION
RSVRIC -1.00 INITIAL CONDITION
X .00 WORKING R AND D COEFFICIENT

448 RC NORMAL DEPTH CHANNEL
ANL .030 LEFT OVERBANK N-VALUE
ANCH .030 MAIN CHANNEL N-VALUE
ANR .030 RIGHT OVERBANK N-VALUE
RLNTH 2640. REACH LENGTH
SEL .0011 ENERGY SLOPE
ELMAX .0 MAX. ELEV. FOR STORAGE/OUTFLOW CALCULATION

CROSS-SECTION DATA

		--- LEFT OVERBANK ---		------ MAIN CHANNEL -------				--- RIGHT OVERBANK ---	
450 RY	ELEVATION	996.20	996.10	996.00	991.00	991.00	996.00	996.10	996.20
449 RX	DISTANCE	.00	10.00	20.00	45.00	135.00	160.00	170.00	180.00

COMPUTED STORAGE-OUTFLOW-ELEVATION DATA

STORAGE	.00	1.52	3.08	4.68	6.33	8.03	9.77	11.56	13.40	15.27
OUTFLOW	.00	17.19	54.83	108.35	175.95	256.64	349.77	454.89	571.68	699.92
ELEVATION	991.00	991.27	991.55	991.82	992.09	992.37	992.64	992.92	993.19	993.46
STORAGE	17.20	19.17	21.18	23.24	25.35	27.50	29.70	31.94	34.22	36.79
OUTFLOW	839.44	990.14	1151.93	1324.76	1508.63	1703.51	1909.42	2126.38	2354.43	2618.53
ELEVATION	993.74	994.01	994.28	994.56	994.83	995.11	995.38	995.65	995.93	996.20

HYDROGRAPH AT STATION RCD1C

PEAK FLOW (CFS)	TIME (HR)		MAXIMUM AVERAGE FLOW 6-HR	24-HR	72-HR	24.92-HR
843.	14.08	(CFS)	428.	139.	134.	134.
		(INCHES)	.494	.643	.643	.643
		(AC-FT)	212.	276.	276.	276.

PEAK STORAGE (AC-FT)	TIME (HR)	MAXIMUM AVERAGE STORAGE 6-HR	24-HR	72-HR	24.92-HR
9.	14.00	5.	2.	2.	2.

PEAK STAGE (FEET)	TIME (HR)	MAXIMUM AVERAGE STAGE 6-HR	24-HR	72-HR	24.92-HR
993.74	14.08	992.78	991.69	991.66	991.66

CUMULATIVE AREA = 8.05 SQ MI

451 KK BR67C

SUB-BASIN BR67C
24-HOUR SCS TYPE II RAINFALL WAS USED TO FIND TC & R FOR THIS BASIN
THIS BASIN USED RAINFALL REDUCTION FACTOR OF .934
L = .79 Kb = .054 Adj. Slope = 5.0

SUBBASIN RUNOFF DATA

456 BA SUBBASIN CHARACTERISTICS
TAREA .13 SUBBASIN AREA

PRECIPITATION DATA

32 PB STORM 3.92 BASIN TOTAL PRECIPITATION

32 PI INCREMENTAL PRECIPITATION PATTERN

.00	.00	.00	.00	.00	.00	.00	.00	.00	.00
.00	.00	.00	.00	.00	.00	.00	.00	.00	.00
.00	.00	.00	.00	.00	.00	.00	.00	.00	.00
.00	.00	.00	.00	.00	.00	.00	.00	.00	.00
.00	.00	.00	.00	.00	.00	.00	.00	.00	.00
.00	.00	.00	.00	.00	.00	.00	.00	.00	.00
.00	.00	.00	.00	.00	.00	.00	.00	.00	.00
.00	.00	.00	.00	.00	.00	.00	.00	.00	.00
.00	.00	.00	.00	.00	.00	.00	.00	.00	.00
.00	.00	.00	.00	.00	.00	.00	.00	.00	.00
.00	.00	.00	.00	.00	.00	.00	.00	.00	.00
.00	.00	.00	.00	.00	.00	.00	.00	.00	.00
.00	.00	.00	.00	.00	.00	.00	.01	.00	.01
.01	.01	.01	.01	.01	.01	.01	.01	.03	.03
.03	.09	.09	.09	.01	.01	.01	.01	.01	.01
.01	.01	.01	.01	.01	.01	.00	.00	.00	.00
.00	.00	.00	.00	.00	.00	.00	.00	.00	.00
.00	.00	.00	.00	.00	.00	.00	.00	.00	.00
.00	.00	.00	.00	.00	.00	.00	.00	.00	.00
.00	.00	.00	.00	.00	.00	.00	.00	.00	.00
.00	.00	.00	.00	.00	.00	.00	.00	.00	.00
.00	.00	.00	.00	.00	.00	.00	.00	.00	.00
.00	.00	.00	.00	.00	.00	.00	.00	.00	.00
.00	.00	.00	.00	.00	.00	.00	.00	.00	.00
.00	.00	.00	.00	.00	.00	.00	.00	.00	.00
.00	.00	.00	.00	.00	.00	.00	.00	.00	.00
.00	.00	.00	.00	.00	.00	.00	.00	.00	.00
.00	.00	.00	.00	.00	.00	.00	.00	.00	.00
.00	.00	.00	.00	.00	.00	.00	.00		

457 LG GREEN AND AMPT LOSS RATE
STRTL .30 STARTING LOSS
DTH .15 MOISTURE DEFICIT
PSIF 7.00 WETTING FRONT SUCTION
XKSAT .14 HYDRAULIC CONDUCTIVITY
RTIMP 15.00 PERCENT IMPERVIOUS AREA

458 UC CLARK UNITGRAPH
TC 1.16 TIME OF CONCENTRATION
R 1.17 STORAGE COEFFICIENT

459 UA ACCUMULATED-AREA VS. TIME, 11 ORDINATES

.0	5.0	16.0	30.0	65.0	77.0	84.0	90.0	94.0	97.0
100.0									

UNIT HYDROGRAPH PARAMETERS
CLARK TC= 1.16 HR, R= 1.17 HR
SNYDER TP= .72 HR, CP= .39

UNIT HYDROGRAPH
81 END-OF-PERIOD ORDINATES

1.	4.	9.	15.	24.	36.	43.	45.	45.	45.
44.	43.	41.	40.	38.	35.	33.	30.	28.	26.
25.	23.	21.	20.	19.	17.	16.	15.	14.	13.
12.	11.	10.	10.	9.	8.	8.	7.	7.	6.
6.	6.	5.	5.	4.	4.	4.	4.	3.	3.
3.	3.	3.	2.	2.	2.	2.	2.	2.	2.
1.	1.	1.	1.	1.	1.	1.	1.	1.	1.
1.	1.	1.	1.	1.	0.	0.	0.	0.	0.
0.									

HYDROGRAPH AT STATION BR67C

TOTAL RAINFALL = 3.92, TOTAL LOSS = 2.04, TOTAL EXCESS = 1.88

PEAK FLOW	TIME	MAXIMUM AVERAGE FLOW 6-HR	24-HR	72-HR	24.92-HR

(CFS)	(HR)					
		(CFS)				
67.	12.67		23.	6.	6.	6.
		(INCHES)	1.679	1.867	1.868	1.868
		(AC-FT)	11.	13.	13.	13.

CUMULATIVE AREA = .13 SQ MI

*** ***

```
              *************
              *           *
461 KK        *   RCD1C2  *
              *           *
              *************
```

ROUTE FLOW FROM SUBASIN BR67C TO COMPUTATION POINT CPCD1C
CROSS-SECTION WAS REVISED TO REFLECT URBANIZED CONDITIONS

HYDROGRAPH ROUTING DATA

464 RS STORAGE ROUTING

NSTPS	1	NUMBER OF SUBREACHES
ITYP	ELEV	TYPE OF INITIAL CONDITION
RSVRIC	-1.00	INITIAL CONDITION
X	.00	WORKING R AND D COEFFICIENT

465 RC NORMAL DEPTH CHANNEL

ANL	.035	LEFT OVERBANK N-VALUE
ANCH	.035	MAIN CHANNEL N-VALUE
ANR	.035	RIGHT OVERBANK N-VALUE
RLNTH	2100.	REACH LENGTH
SEL	.0014	ENERGY SLOPE
ELMAX	.0	MAX. ELEV. FOR STORAGE/OUTFLOW CALCULATION

CROSS-SECTION DATA

		--- LEFT OVERBANK ---		------ MAIN CHANNEL -------			--- RIGHT OVERBANK ---		
467 RY	ELEVATION	994.00	993.00	992.00	989.00	989.00	992.00	993.00	994.00
466 RX	DISTANCE	.00	40.00	60.00	65.00	75.00	80.00	100.00	140.00

***

COMPUTED STORAGE-OUTFLOW-ELEVATION DATA

STORAGE	.00	.13	.28	.43	.60	.77	.96	1.16	1.37	1.59
OUTFLOW	.00	1.73	5.55	11.04	18.07	26.60	36.59	48.07	61.05	75.55
ELEVATION	989.00	989.26	989.53	989.79	990.05	990.32	990.58	990.84	991.11	991.37
STORAGE	1.83	2.07	2.35	2.75	3.28	3.95	4.79	5.90	7.28	8.92
OUTFLOW	91.59	109.22	130.84	157.36	188.99	227.04	270.75	325.51	393.94	478.03
ELEVATION	991.63	991.90	992.16	992.42	992.68	992.95	993.21	993.47	993.74	994.00

*** *** *** *** ***

HYDROGRAPH AT STATION RCD1C2

PEAK FLOW	TIME			MAXIMUM AVERAGE FLOW		
			6-HR	24-HR	72-HR	24.92-HR
(CFS)	(HR)					
		(CFS)				
63.	12.92		23.	6.	6.	6.
		(INCHES)	1.673	1.862	1.862	1.862
		(AC-FT)	11.	13.	13.	13.

PEAK STORAGE	TIME		MAXIMUM AVERAGE STORAGE		
		6-HR	24-HR	72-HR	24.92-HR
(AC-FT)	(HR)				
1.	12.92	1.	0.	0.	0.

PEAK STAGE	TIME		MAXIMUM AVERAGE STAGE		
		6-HR	24-HR	72-HR	24.92-HR
(FEET)	(HR)				
991.14	12.92	990.08	989.37	989.35	989.35

CUMULATIVE AREA = .13 SQ MI

*** ***

```
              *************
              *           *
468 KK        *    CD1C   *
              *           *
              *************
```

SUB-BASIN CD1C
24-HOUR SCS TYPE II RAINFALL WAS USED TO FIND TC & R FOR THIS BASIN
THIS BASIN USED RAINFALL REDUCTION FACTOR OF .934
L = .90 Kb = .049 Adj. Slope = 27.0

SUBBASIN RUNOFF DATA

473 BA SUBBASIN CHARACTERISTICS
TAREA .46 SUBBASIN AREA

PRECIPITATION DATA

32 PB STORM 3.92 BASIN TOTAL PRECIPITATION

32 PI INCREMENTAL PRECIPITATION PATTERN

.00	.00	.00	.00	.00	.00	.00	.00	.00	.00
.00	.00	.00	.00	.00	.00	.00	.00	.00	.00
.00	.00	.00	.00	.00	.00	.00	.00	.00	.00
.00	.00	.00	.00	.00	.00	.00	.00	.00	.00
.00	.00	.00	.00	.00	.00	.00	.00	.00	.00
.00	.00	.00	.00	.00	.00	.00	.00	.00	.00
.00	.00	.00	.00	.00	.00	.00	.00	.00	.00
.00	.00	.00	.00	.00	.00	.00	.00	.00	.00
.00	.00	.00	.00	.00	.00	.00	.00	.00	.00
.00	.00	.00	.00	.00	.00	.00	.00	.00	.00
.00	.00	.00	.00	.00	.00	.00	.00	.00	.00
.00	.00	.00	.00	.00	.00	.00	.00	.00	.00
.00	.00	.00	.00	.00	.00	.00	.01	.00	.01
.01	.01	.01	.01	.01	.01	.01	.01	.03	.03
.03	.09	.09	.09	.01	.01	.01	.01	.01	.01
.01	.01	.01	.01	.01	.01	.00	.00	.00	.00
.00	.00	.00	.00	.00	.00	.00	.00	.00	.00
.00	.00	.00	.00	.00	.00	.00	.00	.00	.00
.00	.00	.00	.00	.00	.00	.00	.00	.00	.00
.00	.00	.00	.00	.00	.00	.00	.00	.00	.00
.00	.00	.00	.00	.00	.00	.00	.00	.00	.00
.00	.00	.00	.00	.00	.00	.00	.00	.00	.00
.00	.00	.00	.00	.00	.00	.00	.00	.00	.00
.00	.00	.00	.00	.00	.00	.00	.00	.00	.00
.00	.00	.00	.00	.00	.00	.00	.00	.00	.00
.00	.00	.00	.00	.00	.00	.00	.00	.00	.00
.00	.00	.00	.00	.00	.00	.00	.00	.00	.00
.00	.00	.00	.00	.00	.00	.00	.00	.00	.00
.00	.00	.00	.00	.00	.00	.00	.00		

474 LG GREEN AND AMPT LOSS RATE

STRTL	.19	STARTING LOSS
DTH	.25	MOISTURE DEFICIT
PSIF	4.70	WETTING FRONT SUCTION
XKSAT	.41	HYDRAULIC CONDUCTIVITY
RTIMP	30.00	PERCENT IMPERVIOUS AREA

475 UC CLARK UNITGRAPH

TC	.58	TIME OF CONCENTRATION
R	.29	STORAGE COEFFICIENT

476 UA ACCUMULATED-AREA VS. TIME, 11 ORDINATES

.0	5.0	16.0	30.0	65.0	77.0	84.0	90.0	94.0	97.0
100.0									

***

UNIT HYDROGRAPH PARAMETERS
CLARK TC= .58 HR, R= .29 HR
SNYDER TP= .32 HR, CP= .57

UNIT HYDROGRAPH
22 END-OF-PERIOD ORDINATES

44.	159.	384.	532.	498.	435.	368.	295.	221.	165.
124.	93.	69.	52.	39.	29.	22.	16.	12.	9.
7.	5.								

*** *** *** *** ***

HYDROGRAPH AT STATION CD1C

TOTAL RAINFALL = 3.92, TOTAL LOSS = 2.00, TOTAL EXCESS = 1.93

PEAK FLOW	TIME			MAXIMUM AVERAGE FLOW		
			6-HR	24-HR	72-HR	24.92-HR
(CFS)	(HR)					
		(CFS)				
552.	12.25		79.	24.	23.	23.
		(INCHES)	1.577	1.916	1.918	1.918
		(AC-FT)	39.	47.	47.	47.

CUMULATIVE AREA = .46 SQ MI

*** ***

```
              *************
              *           *
478 KK        *    CD1R   *
              *           *
              *************
```

DIVERT RETENTION VOLUME

```
   DT        DIVERSION
                ISTAD       RET1C  DIVERSION HYDROGRAPH IDENTIFICATION
               DSTRMX       32.00  MAXIMUM VOLUME TO BE DIVERTED

   DI          INFLOW         .00   1000.00  10000.00

   DQ     DIVERTED FLOW       .00   1000.00  10000.00

                                                    ***

    ***          ***           ***           ***           ***

                    DIVERSION HYDROGRAPH     RET1C

PEAK FLOW     TIME                          MAXIMUM AVERAGE FLOW
                                    6-HR        24-HR       72-HR       24.92-HR
 (CFS)        (HR)
                          (CFS)
  552.       12.25                60.          16.         16.          16.
                         (INCHES)   1.195        1.293       1.293        1.293
                         (AC-FT)   30.          32.         32.          32.

                    CUMULATIVE AREA =     .46 SQ MI

    ***          ***           ***           ***           ***

                    HYDROGRAPH AT STATION     CD1R

PEAK FLOW     TIME                          MAXIMUM AVERAGE FLOW
                                    6-HR        24-HR       72-HR       24.92-HR
 (CFS)        (HR)
                          (CFS)
  259.       12.58                27.          8.          8.           8.
                         (INCHES)   .534         .625        .625         .625
                         (AC-FT)   13.          15.         15.          15.

                    CUMULATIVE AREA =     .46 SQ MI


*** *** *** *** *** *** *** *** *** *** *** *** *** *** *** *** *** *** *** *** *** *** *** *** *** *** *** *** *** *** *** *** *** *** ***

          **************
          *            *
483 KK    *    CPCD1C  *
          *            *
          **************
                    COMBINE ROUTED FLOWS FROM COMPUTATION POINT CB163C AND SUB-BASIN BR67C
                    WITH RUNOFF FROM SUB-BASIN CD1C

486 HC         HYDROGRAPH COMBINATION
                    ICOMP           3  NUMBER OF HYDROGRAPHS TO COMBINE

                                                    ***

    ***          ***           ***           ***           ***

                    HYDROGRAPH AT STATION    CPCD1C

PEAK FLOW     TIME                          MAXIMUM AVERAGE FLOW
                                    6-HR        24-HR       72-HR       24.92-HR
 (CFS)        (HR)
                          (CFS)
  896.       14.00               473.         153.        148.         148.
                         (INCHES)   .509         .660        .660         .660
                         (AC-FT)   234.         304.        304.         304.

                    CUMULATIVE AREA =     8.64 SQ MI


*** *** *** *** *** *** *** *** *** *** *** *** *** *** *** *** *** *** *** *** *** *** *** *** *** *** *** *** *** *** *** *** *** *** ***

          **************
          *            *
487 KK    *    RCD2C1  *
          *            *
          **************
                    ROUTE FLOW FROM COMPUTATION POINT CPCD1C TO COMPUTATION POINT CIRSMC
                    MARIOCPA DRAIN FROM 67TH AVE TO 75TH AVE.
                    ADJUST SLOPE FROM .0011 TO REFLECT A VELOCITY OF LESS THAN 5 FT/SEC

         HYDROGRAPH ROUTING DATA

491 RS         STORAGE ROUTING
                    NSTPS           3  NUMBER OF SUBREACHES
                    ITYP         ELEV  TYPE OF INITIAL CONDITION
                   RSVRIC       -1.00  INITIAL CONDITION
                        X         .00 WORKING R AND D COEFFICIENT

492 RC         NORMAL DEPTH CHANNEL
```



```
                      ANL       .030  LEFT OVERBANK N-VALUE
                     ANCH       .030  MAIN CHANNEL N-VALUE
                      ANR       .030  RIGHT OVERBANK N-VALUE
                    RLNTH       3600. REACH LENGTH
                      SEL       .0007 ENERGY SLOPE
                    ELMAX         .0  MAX. ELEV. FOR STORAGE/OUTFLOW CALCULATION

                                CROSS-SECTION DATA
                          --- LEFT OVERBANK ---  ------ MAIN CHANNEL -------  --- RIGHT OVERBANK ---
494 RY       ELEVATION    990.20   990.10   990.00   985.00   985.00   990.00   990.10   990.20
493 RX       DISTANCE        .00    10.00    20.00    45.00   155.00   180.00   190.00   200.00

                                                    ***

                                COMPUTED STORAGE-OUTFLOW-ELEVATION DATA

             STORAGE        .00     2.52     5.10     7.74    10.45    13.21    16.04    18.93    21.88    24.90
             OUTFLOW        .00    16.74    53.36   105.33   170.88   248.96   338.91   440.23   552.58   675.70
           ELEVATION     985.00   985.27   985.55   985.82   986.09   986.37   986.64   986.92   987.19   987.46

             STORAGE      27.98    31.11    34.31    37.57    40.90    44.28    47.73    51.24    54.81    58.76
             OUTFLOW     809.37   953.45  1107.83  1272.40  1447.11  1631.92  1826.80  2031.72  2246.69  2492.50
           ELEVATION     987.74   988.01   988.28   988.56   988.83   989.11   989.38   989.65   989.93   990.20

    ***          ***           ***           ***           ***

                    HYDROGRAPH AT STATION    RCD2C1

PEAK FLOW     TIME                          MAXIMUM AVERAGE FLOW
                                    6-HR        24-HR       72-HR       24.92-HR
 (CFS)        (HR)
                          (CFS)
  887.       14.25               465.         149.        144.         144.
                         (INCHES)   .501         .643        .643         .643
                         (AC-FT)  231.         296.        296.         296.

PEAK STORAGE  TIME                          MAXIMUM AVERAGE STORAGE
                                    6-HR        24-HR       72-HR       24.92-HR
 (AC-FT)      (HR)
   10.       14.25                 6.           2.          2.           2.

PEAK STAGE    TIME                          MAXIMUM AVERAGE STAGE
                                    6-HR        24-HR       72-HR       24.92-HR
 (FEET)       (HR)
  987.88     14.25               986.92       985.72      985.70       985.70

                    CUMULATIVE AREA =     8.64 SQ MI


*** *** *** *** *** *** *** *** *** *** *** *** *** *** *** *** *** *** *** *** *** *** *** *** *** *** *** *** *** *** *** *** *** *** ***

          **************
          *            *
          *            *
495 KK    *     ER55B  *
          *            *
          **************
                    SUB-BASIN ER55B
                    24-HOUR SCS TYPE II RAINFALL WAS USED TO FIND TC & R FOR THIS BASIN
                    THIS BASIN USED RAINFALL REDUCTION FACTOR OF  .934
                      L =  .79  Kb = .050  Adj. Slope =    8.0

         SUBBASIN RUNOFF DATA

500 BA         SUBBASIN CHARACTERISTICS
                    TAREA         .26  SUBBASIN AREA

               PRECIPITATION DATA

32 PB               STORM        3.92  BASIN TOTAL PRECIPITATION

32 PI          INCREMENTAL PRECIPITATION PATTERN
                  .00      .00      .00      .00      .00      .00      .00      .00      .00      .00
                  .00      .00      .00      .00      .00      .00      .00      .00      .00      .00
                  .00      .00      .00      .00      .00      .00      .00      .00      .00      .00
                  .00      .00      .00      .00      .00      .00      .00      .00      .00      .00
                  .00      .00      .00      .00      .00      .00      .00      .00      .00      .00
                  .00      .00      .00      .00      .00      .00      .00      .00      .00      .00
                  .00      .00      .00      .00      .00      .00      .00      .00      .00      .00
                  .00      .00      .00      .00      .00      .00      .00      .00      .00      .00
                  .00      .00      .00      .00      .00      .00      .00      .00      .00      .00
                  .00      .00      .00      .00      .00      .00      .00      .00      .00      .00
                  .00      .00      .00      .00      .00      .00      .00      .00      .00      .00
                  .00      .00      .00      .00      .00      .00      .00      .00      .01      .00
                  .01      .01      .01      .01      .01      .01      .01      .01      .03      .03
                  .03      .09      .09      .09      .01      .01      .01      .01      .01      .01
                  .01      .01      .01      .01      .01      .01      .00      .00      .00      .00
                  .00      .00      .00      .00      .00      .00      .00      .00      .00      .00
                  .00      .00      .00      .00      .00      .00      .00      .00      .00      .00
                  .00      .00      .00      .00      .00      .00      .00      .00      .00      .00
                  .00      .00      .00      .00      .00      .00      .00      .00      .00      .00
                  .00      .00      .00      .00      .00      .00      .00      .00      .00      .00
```

```
                .00     .00     .00     .00     .00     .00     .00     .00     .00     .00
                .00     .00     .00     .00     .00     .00     .00     .00     .00     .00
                .00     .00     .00     .00     .00     .00     .00     .00     .00     .00
                .00     .00     .00     .00     .00     .00     .00     .00     .00     .00
                .00     .00     .00     .00     .00     .00     .00     .00     .00     .00
                .00     .00     .00     .00     .00     .00     .00     .00     .00     .00
                .00     .00     .00     .00     .00     .00     .00     .00     .00     .00
                .00     .00     .00     .00     .00     .00     .00     .00

501 LG      GREEN AND AMPT LOSS RATE
                STRTL      .26  STARTING LOSS
                  DTH      .26  MOISTURE DEFICIT
                 PSIF     6.00  WETTING FRONT SUCTION
                XKSAT      .21  HYDRAULIC CONDUCTIVITY
                RTIMP    27.00  PERCENT IMPERVIOUS AREA

502 UC      CLARK UNITGRAPH
                   TC      .91  TIME OF CONCENTRATION
                    R      .60  STORAGE COEFFICIENT

503 UA      ACCUMULATED-AREA VS. TIME,  11 ORDINATES
                  .0     5.0    16.0    30.0    65.0    77.0    84.0    90.0    94.0    97.0
                100.0

                                          ***

                                    UNIT HYDROGRAPH PARAMETERS
                                CLARK   TC=   .91 HR,       R=   .60 HR
                               SNYDER   TP=   .50 HR,      CP=   .47

                                      UNIT HYDROGRAPH
                                  43 END-OF-PERIOD ORDINATES
                    6.      23.     49.     93.    140.    156.    155.    149.    140.    130.
                  119.     107.     93.     81.     71.     61.     53.     46.     40.     35.
                   31.      27.     23.     20.     18.     15.     13.     12.     10.      9.
                    8.       7.      6.      5.      4.      4.      3.      3.      2.      2.
                    2.       2.      1.

    ***             ***             ***             ***             ***

                        HYDROGRAPH AT STATION     ER55B

   TOTAL RAINFALL =    3.92, TOTAL LOSS =    1.94, TOTAL EXCESS =    1.99

PEAK FLOW     TIME                          MAXIMUM AVERAGE FLOW
                                      6-HR        24-HR       72-HR       24.92-HR
 (CFS)        (HR)
                          (CFS)
   205.      12.42                    46.         14.         13.         13.
                        (INCHES)     1.667       1.972       1.974       1.974
                        (AC-FT)       23.         27.         27.         27.

                        CUMULATIVE AREA =     .26 SQ MI


*** *** *** *** *** *** *** *** *** *** *** *** *** *** *** *** *** *** *** *** *** *** *** *** *** *** *** *** *** *** *** *** *** *** ***

            ***************
            *             *
505 KK      *     ER55R   *
            *             *
            ***************
                        DIVERT RETENTION VOLUME

    DT          DIVERSION
                    ISTAD       RET55  DIVERSION HYDROGRAPH IDENTIFICATION
                   DSTRMX       19.20  MAXIMUM VOLUME TO BE DIVERTED

    DI             INFLOW         .00   1000.00  10000.00

    DQ       DIVERTED FLOW        .00   1000.00  10000.00

                                                          ***

    ***             ***             ***             ***             ***

                        DIVERSION HYDROGRAPH     RET55

PEAK FLOW     TIME                          MAXIMUM AVERAGE FLOW
                                      6-HR        24-HR       72-HR       24.92-HR
 (CFS)        (HR)
                          (CFS)
   205.      12.42                    36.         10.          9.          9.
                        (INCHES)     1.315       1.406       1.406       1.406
                        (AC-FT)       18.         19.         19.         19.

                        CUMULATIVE AREA =     .26 SQ MI

    ***             ***             ***             ***             ***

                        HYDROGRAPH AT STATION     ER55R
```



```
PEAK FLOW     TIME                          MAXIMUM AVERAGE FLOW
                                      6-HR        24-HR       72-HR       24.92-HR
 (CFS)        (HR)
                          (CFS)
    82.      13.25                    13.          4.          4.          4.
                        (INCHES)      .490        .568        .568        .568
                        (AC-FT)         7.          8.          8.          8.

                        CUMULATIVE AREA =     .26 SQ MI


*** *** *** *** *** *** *** *** *** *** *** *** *** *** *** *** *** *** *** *** *** *** *** *** *** *** *** *** *** *** *** *** *** *** ***

            ***************
            *             *
510 KK      *     RE59B   *
            *             *
            ***************
                        ROUTE FLOWS FROM CONCENTRATION POINT CRE55B TO CP CER59B
                        ROUTING REVISED TO REFLECT URBANIZED CONDITIONS

                    HYDROGRAPH ROUTING DATA

513 RS          STORAGE ROUTING
                     NSTPS          2  NUMBER OF SUBREACHES
                      ITYP       ELEV  TYPE OF INITIAL CONDITION
                     RSVRIC     -1.00  INITIAL CONDITION
                         X        .00 WORKING R AND D COEFFICIENT

514 RC          NORMAL DEPTH CHANNEL
                       ANL       .035  LEFT OVERBANK N-VALUE
                      ANCH       .035  MAIN CHANNEL N-VALUE
                       ANR       .035  RIGHT OVERBANK N-VALUE
                     RLNTH       2600.  REACH LENGTH
                       SEL      .0020  ENERGY SLOPE
                     ELMAX         .0  MAX. ELEV. FOR STORAGE/OUTFLOW CALCULATION

                                CROSS-SECTION DATA
                          --- LEFT OVERBANK ---  ------ MAIN CHANNEL -------  --- RIGHT OVERBANK ---
516 RY       ELEVATION   1026.00   1024.00   1023.00   1020.00   1020.00   1023.00   1024.00   1026.00
515 RX       DISTANCE        .00     30.00     50.00     55.00     65.00     70.00     90.00    120.00

                                          ***

                            COMPUTED STORAGE-OUTFLOW-ELEVATION DATA

     STORAGE       .00       .20       .42       .65       .91      1.19      1.49      1.81      2.14      2.50
     OUTFLOW       .00      2.81      9.03     18.02     29.61     43.73     60.41     79.67    101.56    126.16
   ELEVATION   1020.00   1020.32   1020.63   1020.95   1021.26   1021.58   1021.89   1022.21   1022.53   1022.84

     STORAGE      2.90      3.52      4.37      5.46      6.74      8.20      9.84     11.65     13.65     15.82
     OUTFLOW    156.36    195.06    243.03    303.20    377.48    466.17    570.50    691.62    830.69    988.83
   ELEVATION   1023.16   1023.47   1023.79   1024.11   1024.42   1024.74   1025.05   1025.37   1025.68   1026.00

    ***             ***             ***             ***             ***

                        HYDROGRAPH AT STATION     RE59B

PEAK FLOW     TIME                          MAXIMUM AVERAGE FLOW
                                      6-HR        24-HR       72-HR       24.92-HR
 (CFS)        (HR)
                          (CFS)
    55.      13.67                    13.          4.          4.          4.
                        (INCHES)      .477        .560        .560        .560
                        (AC-FT)         7.          8.          8.          8.

PEAK STORAGE  TIME                          MAXIMUM AVERAGE STORAGE
                                      6-HR        24-HR       72-HR       24.92-HR
 (AC-FT)      (HR)
     1.      13.67                     0.          0.          0.          0.

PEAK STAGE    TIME                          MAXIMUM AVERAGE STAGE
                                      6-HR        24-HR       72-HR       24.92-HR
 (FEET)       (HR)
  1021.79    13.67                  1020.69     1020.24     1020.23     1020.23

                        CUMULATIVE AREA =     .26 SQ MI


*** *** *** *** *** *** *** *** *** *** *** *** *** *** *** *** *** *** *** *** *** *** *** *** *** *** *** *** *** *** *** *** *** *** ***

            ***************
            *             *
517 KK      *     ER59B   *
            *             *
            ***************
                        SUB-BASIN ER59B
                        24-HOUR SCS TYPE II RAINFALL WAS USED TO FIND TC & R FOR THIS BASIN
                        THIS BASIN USED RAINFALL REDUCTION FACTOR OF  .934
```

```
                    L =  .95  Kb = .030  Adj. Slope =    8.0

          SUBBASIN RUNOFF DATA

522 BA       SUBBASIN CHARACTERISTICS
                  TAREA         .26  SUBBASIN AREA

             PRECIPITATION DATA

32 PB             STORM        3.92  BASIN TOTAL PRECIPITATION

32 PI        INCREMENTAL PRECIPITATION PATTERN
               .00    .00    .00    .00    .00    .00    .00    .00    .00    .00
               .00    .00    .00    .00    .00    .00    .00    .00    .00    .00
               .00    .00    .00    .00    .00    .00    .00    .00    .00    .00
               .00    .00    .00    .00    .00    .00    .00    .00    .00    .00
               .00    .00    .00    .00    .00    .00    .00    .00    .00    .00
               .00    .00    .00    .00    .00    .00    .00    .00    .00    .00
               .00    .00    .00    .00    .00    .00    .00    .00    .00    .00
               .00    .00    .00    .00    .00    .00    .00    .00    .00    .00
               .00    .00    .00    .00    .00    .00    .00    .00    .00    .00
               .00    .00    .00    .00    .00    .00    .00    .00    .00    .00
               .00    .00    .00    .00    .00    .00    .00    .00    .00    .00
               .00    .00    .00    .00    .00    .00    .00    .01    .00    .01
               .01    .01    .01    .01    .01    .01    .01    .01    .03    .03
               .03    .09    .09    .09    .01    .01    .01    .01    .01    .01
               .01    .01    .01    .01    .01    .01    .00    .00    .00    .00
               .00    .00    .00    .00    .00    .00    .00    .00    .00    .00
               .00    .00    .00    .00    .00    .00    .00    .00    .00    .00
               .00    .00    .00    .00    .00    .00    .00    .00    .00    .00
               .00    .00    .00    .00    .00    .00    .00    .00    .00    .00
               .00    .00    .00    .00    .00    .00    .00    .00    .00    .00
               .00    .00    .00    .00    .00    .00    .00    .00    .00    .00
               .00    .00    .00    .00    .00    .00    .00    .00    .00    .00
               .00    .00    .00    .00    .00    .00    .00    .00    .00    .00
               .00    .00    .00    .00    .00    .00    .00    .00    .00    .00
               .00    .00    .00    .00    .00    .00    .00    .00    .00    .00
               .00    .00    .00    .00    .00    .00    .00    .00    .00    .00
               .00    .00    .00    .00    .00    .00    .00    .00    .00    .00

523 LG       GREEN AND AMPT LOSS RATE
                  STRTL         .13  STARTING LOSS
                    DTH         .25  MOISTURE DEFICIT
                   PSIF        5.00  WETTING FRONT SUCTION
                  XKSAT         .37  HYDRAULIC CONDUCTIVITY
                  RTIMP       71.00  PERCENT IMPERVIOUS AREA

524 UC       CLARK UNITGRAPH
                     TC         .67  TIME OF CONCENTRATION
                      R         .49  STORAGE COEFFICIENT

525 UA       ACCUMULATED-AREA VS. TIME,  11 ORDINATES
                    .0     5.0    16.0    30.0    65.0    77.0    84.0    90.0    94.0    97.0
                 100.0

                                          ***

                                  UNIT HYDROGRAPH PARAMETERS
                               CLARK   TC=   .67 HR,      R=   .49 HR
                              SNYDER   TP=   .40 HR,     CP=   .48

                                     UNIT HYDROGRAPH
                                35 END-OF-PERIOD ORDINATES
                    12.    46.   113.   180.   199.   191.   178.   163.   144.   122.
                   103.    87.    73.    62.    52.    44.    37.    31.    26.    22.
                    19.    16.    13.    11.    10.     8.     7.     6.     5.     4.
                     3.     3.     2.     2.     2.

     ***           ***           ***           ***           ***

                          HYDROGRAPH AT STATION    ER59B

   TOTAL RAINFALL =    3.92, TOTAL LOSS =     .82, TOTAL EXCESS =    3.11

PEAK FLOW     TIME                          MAXIMUM AVERAGE FLOW
                                      6-HR        24-HR       72-HR      24.92-HR
 (CFS)        (HR)
                          (CFS)
  274.      12.25                      64.         21.         21.         21.
                        (INCHES)     2.281       3.083       3.089       3.089
                        (AC-FT)        32.         43.         43.         43.

                        CUMULATIVE AREA =     .26 SQ MI


*** *** *** *** *** *** *** *** *** *** *** *** *** *** *** *** *** *** *** *** *** *** *** *** *** *** *** *** *** *** *** *** *** *** ***


          **************
          *            *
527 KK    *     ER59R  *
          *            *
```



```
          **************
                    DIVERT RETENTION VOLUME

 DT          DIVERSION
                   ISTAD       RET59  DIVERSION HYDROGRAPH IDENTIFICATION
                  DSTRMX       23.20  MAXIMUM VOLUME TO BE DIVERTED

 DI             INFLOW          .00   1000.00  10000.00

 DQ       DIVERTED FLOW         .00   1000.00  10000.00

                                                    ***

  ***            ***           ***           ***           ***

                          DIVERSION HYDROGRAPH    RET59

PEAK FLOW     TIME                          MAXIMUM AVERAGE FLOW
                                      6-HR        24-HR       72-HR      24.92-HR
 (CFS)        (HR)
                          (CFS)
  274.      12.25                      41.         12.         11.         11.
                        (INCHES)     1.460       1.680       1.680       1.680
                        (AC-FT)        20.         23.         23.         23.

                        CUMULATIVE AREA =     .26 SQ MI


  ***            ***           ***           ***           ***

                          HYDROGRAPH AT STATION    ER59R

PEAK FLOW     TIME                          MAXIMUM AVERAGE FLOW
                                      6-HR        24-HR       72-HR      24.92-HR
 (CFS)        (HR)
                          (CFS)
  194.      12.67                      33.         10.          9.          9.
                        (INCHES)     1.184       1.409       1.409       1.409
                        (AC-FT)        16.         19.         19.         19.

                        CUMULATIVE AREA =     .26 SQ MI


*** *** *** *** *** *** *** *** *** *** *** *** *** *** *** *** *** *** *** *** *** *** *** *** *** *** *** *** *** *** *** *** *** *** ***


          **************
          *            *
532 KK    *    CER59B  *
          *            *
          **************
                    COMBINE ROUTED FLOW FROM CP CRE55B TO RUNOFF FROM SUBBASIN ER59B

534 HC       HYDROGRAPH COMBINATION
                  ICOMP           2  NUMBER OF HYDROGRAPHS TO COMBINE

                                                    ***

  ***            ***           ***           ***           ***

                          HYDROGRAPH AT STATION   CER59B

PEAK FLOW     TIME                          MAXIMUM AVERAGE FLOW
                                      6-HR        24-HR       72-HR      24.92-HR
 (CFS)        (HR)
                          (CFS)
  194.      12.67                      46.         14.         13.         13.
                        (INCHES)      .826        .987        .987        .987
                        (AC-FT)        23.         27.         27.         27.

                        CUMULATIVE AREA =     .51 SQ MI


*** *** *** *** *** *** *** *** *** *** *** *** *** *** *** *** *** *** *** *** *** *** *** *** *** *** *** *** *** *** *** *** *** *** ***


          **************
          *            *
535 KK    *    RIR63B  *
          *            *
          **************
                    CP CIR63B IS LOCATED ON THE WESTERN EDGE OF THE STUDY AREA WHICH IS BOUNDED
                    BY A CONCRETE IRRIGATION CANAL AND EARTHEN ROADWAY.  THE IRRIGATION CANAL IS
                    OVERTOPPED AND FLOW CONTINUES ITS NATURAL FLOW PATH TO THE WEST.  THE
                    FLOW IS APPROXIMATELY 45 CFS SOUTH TO MARICOPA DRAIN.

 DT          DIVERSION
                   ISTAD      DIR63B  DIVERSION HYDROGRAPH IDENTIFICATION

 DI             INFLOW          .00     45.00    100.00    200.00    400.00    600.00    800.00

 DQ       DIVERTED FLOW         .00      .00      55.00    155.00    355.00    555.00    755.00
```

***

*** *** *** *** ***

DIVERSION HYDROGRAPH DIR63B

PEAK FLOW (CFS)	TIME (HR)		MAXIMUM AVERAGE FLOW 6-HR	24-HR	72-HR	24.92-HR
		(CFS)				
149.	12.67		18.	4.	4.	4.
		(INCHES)	.322	.322	.322	.322
		(AC-FT)	9.	9.	9.	9.

CUMULATIVE AREA = .51 SQ MI

*** *** *** ***

HYDROGRAPH AT STATION RIR63B

PEAK FLOW (CFS)	TIME (HR)		MAXIMUM AVERAGE FLOW 6-HR	24-HR	72-HR	24.92-HR
		(CFS)				
45.	12.58		28.	9.	9.	9.
		(INCHES)	.503	.665	.665	.665
		(AC-FT)	14.	18.	18.	18.

CUMULATIVE AREA = .51 SQ MI

*** ***

```
              **************
              *            *
543 KK        *    IR63B   *
              *            *
              **************
```

SUB-BASIN IR63B
24-HOUR SCS TYPE II RAINFALL WAS USED TO FIND TC & R FOR THIS BASIN
THIS BASIN USED RAINFALL REDUCTION FACTOR OF .934
L = .82 Kb = .034 Adj. Slope = 11.0

SUBBASIN RUNOFF DATA

548 BA SUBBASIN CHARACTERISTICS
TAREA .12 SUBBASIN AREA

PRECIPITATION DATA

32 PB STORM 3.92 BASIN TOTAL PRECIPITATION

32 PI INCREMENTAL PRECIPITATION PATTERN

.00	.00	.00	.00	.00	.00	.00	.00	.00	.00
.00	.00	.00	.00	.00	.00	.00	.00	.00	.00
.00	.00	.00	.00	.00	.00	.00	.00	.00	.00
.00	.00	.00	.00	.00	.00	.00	.00	.00	.00
.00	.00	.00	.00	.00	.00	.00	.00	.00	.00
.00	.00	.00	.00	.00	.00	.00	.00	.00	.00
.00	.00	.00	.00	.00	.00	.00	.00	.00	.00
.00	.00	.00	.00	.00	.00	.00	.00	.00	.00
.00	.00	.00	.00	.00	.00	.00	.00	.00	.00
.00	.00	.00	.00	.00	.00	.00	.00	.00	.00
.00	.00	.00	.00	.00	.00	.00	.00	.00	.00
.00	.00	.00	.00	.00	.00	.00	.00	.00	.00
.00	.00	.00	.00	.00	.00	.00	.01	.00	.01
.01	.01	.01	.01	.01	.01	.01	.01	.03	.03
.03	.09	.09	.09	.01	.01	.01	.01	.01	.01
.01	.01	.01	.01	.01	.01	.00	.00	.00	.00
.00	.00	.00	.00	.00	.00	.00	.00	.00	.00
.00	.00	.00	.00	.00	.00	.00	.00	.00	.00
.00	.00	.00	.00	.00	.00	.00	.00	.00	.00
.00	.00	.00	.00	.00	.00	.00	.00	.00	.00
.00	.00	.00	.00	.00	.00	.00	.00	.00	.00
.00	.00	.00	.00	.00	.00	.00	.00	.00	.00
.00	.00	.00	.00	.00	.00	.00	.00	.00	.00
.00	.00	.00	.00	.00	.00	.00	.00	.00	.00
.00	.00	.00	.00	.00	.00	.00	.00	.00	.00
.00	.00	.00	.00	.00	.00	.00	.00	.00	.00
.00	.00	.00	.00	.00	.00	.00	.00	.00	.00
.00	.00	.00	.00	.00	.00	.00	.00	.00	.00
.00	.00	.00	.00	.00	.00	.00	.00		

549 LG GREEN AND AMPT LOSS RATE

STRTL	.13	STARTING LOSS
DTH	.25	MOISTURE DEFICIT
PSIF	4.80	WETTING FRONT SUCTION
XKSAT	.40	HYDRAULIC CONDUCTIVITY
RTIMP	71.00	PERCENT IMPERVIOUS AREA

550 UC CLARK UNITGRAPH

TC .57 TIME OF CONCENTRATION
R .56 STORAGE COEFFICIENT

551 UA ACCUMULATED-AREA VS. TIME, 11 ORDINATES

.0	5.0	16.0	30.0	65.0	77.0	84.0	90.0	94.0	97.0
100.0									

***

UNIT HYDROGRAPH PARAMETERS
CLARK TC= .57 HR, R= .56 HR
SNYDER TP= .36 HR, CP= .41

UNIT HYDROGRAPH
39 END-OF-PERIOD ORDINATES

7.	25.	61.	88.	90.	87.	81.	72.	62.	54.
46.	40.	34.	30.	25.	22.	19.	16.	14.	12.
10.	9.	8.	7.	6.	5.	4.	4.	3.	3.
2.	2.	2.	2.	1.	1.	1.	1.	1.	

*** *** *** *** ***

HYDROGRAPH AT STATION IR63B

TOTAL RAINFALL = 3.92, TOTAL LOSS = .82, TOTAL EXCESS = 3.10

PEAK FLOW (CFS)	TIME (HR)		MAXIMUM AVERAGE FLOW 6-HR	24-HR	72-HR	24.92-HR
		(CFS)				
127.	12.25		30.	10.	10.	10.
		(INCHES)	2.274	3.075	3.082	3.082
		(AC-FT)	15.	20.	20.	20.

CUMULATIVE AREA = .12 SQ MI

*** ***

```
              **************
              *            *
553 KK        *    IR63    *
              *            *
              **************
```

DIVERT RETENTION VOLUME

DT DIVERSION
ISTAD RET63 DIVERSION HYDROGRAPH IDENTIFICATION
DSTRMX 11.20 MAXIMUM VOLUME TO BE DIVERTED

DI INFLOW .00 1000.00 10000.00

DQ DIVERTED FLOW .00 1000.00 10000.00

***

*** *** *** *** ***

DIVERSION HYDROGRAPH RET63

PEAK FLOW (CFS)	TIME (HR)		MAXIMUM AVERAGE FLOW 6-HR	24-HR	72-HR	24.92-HR
		(CFS)				
127.	12.25		20.	6.	5.	5.
		(INCHES)	1.471	1.694	1.694	1.694
		(AC-FT)	10.	11.	11.	11.

CUMULATIVE AREA = .12 SQ MI

*** *** *** *** ***

HYDROGRAPH AT STATION IR63

PEAK FLOW (CFS)	TIME (HR)		MAXIMUM AVERAGE FLOW 6-HR	24-HR	72-HR	24.92-HR
		(CFS)				
79.	12.75		16.	5.	4.	4.
		(INCHES)	1.166	1.388	1.388	1.388
		(AC-FT)	8.	9.	9.	9.

CUMULATIVE AREA = .12 SQ MI

*** ***

```
         **************
         *            *
```

```
558 KK     *    CIR63B  *
           *             *
           ***************
                         COMBINE ROUTED FLOW FROM CP CER59B AND RUNOFF OF SUB-BASINS IR63B & IR62B

560 HC          HYDROGRAPH COMBINATION
                      ICOMP         2  NUMBER OF HYDROGRAPHS TO COMBINE

                                                                   ***

      ***            ***            ***            ***            ***

                      HYDROGRAPH AT STATION    CIR63B

 PEAK FLOW      TIME                           MAXIMUM AVERAGE FLOW
                                    6-HR          24-HR        72-HR      24.92-HR

  (CFS)         (HR)
                          (CFS)
    124.       12.75                 43.           14.          13.          13.
                        (INCHES)    .631          .805         .805         .805
                         (AC-FT)     22.           27.          27.          27.

                      CUMULATIVE AREA =      .64 SQ MI

*** *** *** *** *** *** *** *** *** *** *** *** *** *** *** *** *** *** *** *** *** *** *** *** *** *** *** *** *** *** *** *** *** ***

           ***************
           *             *
561 KK     *    RIR65C  *
           *             *
           ***************
                         ROUTE RETRIEVED FLOW FROM SUB-BASIN IR63B TO COMPUTATION POINT CIR65C
                         CROSS-SECTION REVISED TO REFLECT URBANIZED CONDITIONS

              HYDROGRAPH ROUTING DATA

564 RS          STORAGE ROUTING
                      NSTPS          7  NUMBER OF SUBREACHES
                       ITYP       ELEV  TYPE OF INITIAL CONDITION
                     RSVRIC      -1.00  INITIAL CONDITION
                          X        .00  WORKING R AND D COEFFICIENT

565 RC          NORMAL DEPTH CHANNEL
                        ANL       .030  LEFT OVERBANK N-VALUE
                       ANCH       .030  MAIN CHANNEL N-VALUE
                        ANR       .030  RIGHT OVERBANK N-VALUE
                      RLNTH      3300.  REACH LENGTH
                        SEL      .0010  ENERGY SLOPE
                      ELMAX         .0  MAX. ELEV. FOR STORAGE/OUTFLOW CALCULATION

                                         CROSS-SECTION DATA
                     --- LEFT OVERBANK ---  ------ MAIN CHANNEL -------  --- RIGHT OVERBANK ---
567 RY       ELEVATION     6.00      5.00      4.00      1.00      1.00      4.00      5.00      6.00
566 RX        DISTANCE      .00      1.00     11.00     21.00     26.00     31.00     41.00     46.00

                                                                   ***

                                     COMPUTED STORAGE-OUTFLOW-ELEVATION DATA

       STORAGE        .00       .11       .25       .42       .61       .83      1.07      1.34      1.64      1.96
       OUTFLOW        .00       .88      2.94      6.10     10.42     15.95     22.80     31.04     40.75     52.03
     ELEVATION       1.00      1.26      1.53      1.79      2.05      2.32      2.58      2.84      3.11      3.37

       STORAGE       2.31      2.68      3.10      3.61      4.23      4.96      5.76      6.60      7.47      8.37
       OUTFLOW      64.95     79.59     98.42    121.45    147.94    178.47    214.38    254.83    299.46    348.23
     ELEVATION       3.63      3.89      4.16      4.42      4.68      4.95      5.21      5.47      5.74      6.00

*** WARNING *** MODIFIED PULS ROUTING MAY BE NUMERICALLY UNSTABLE FOR OUTFLOWS BETWEEN        80. TO        348.
                THE ROUTED HYDROGRAPH SHOULD BE EXAMINED FOR OSCILLATIONS OR OUTFLOWS GREATER THAN PEAK INFLOWS.
                THIS CAN BE CORRECTED BY DECREASING THE TIME INTERVAL OR INCREASING STORAGE (USE A LONGER REACH.)

      ***            ***            ***            ***            ***

                      HYDROGRAPH AT STATION    RIR65C

 PEAK FLOW      TIME                           MAXIMUM AVERAGE FLOW
                                    6-HR          24-HR        72-HR      24.92-HR

  (CFS)         (HR)
                          (CFS)
    112.       13.08                 43.           14.          13.          13.
                        (INCHES)    .619          .793         .793         .793
                         (AC-FT)     21.           27.          27.          27.

PEAK STORAGE    TIME                        MAXIMUM AVERAGE STORAGE
                                    6-HR          24-HR        72-HR      24.92-HR

 (AC-FT)        (HR)
      0.       13.08                  0.            0.           0.           0.

 PEAK STAGE     TIME                           MAXIMUM AVERAGE STAGE
                                    6-HR          24-HR        72-HR      24.92-HR

  (FEET)        (HR)
```



```
     4.31      13.08                  3.03          1.79          1.76          1.76

                          CUMULATIVE AREA =      .64 SQ MI

*** *** *** *** *** *** *** *** *** *** *** *** *** *** *** *** *** *** *** *** *** *** *** *** *** *** *** *** *** *** *** *** *** ***

           ***************
           *             *
568 KK     *    IR65C   *
           *             *
           ***************
                         SUB-BASIN IR65C
                         24-HOUR SCS TYPE II RAINFALL WAS USED TO FIND TC & R FOR THIS BASIN
                         THIS BASIN USED RAINFALL REDUCTION FACTOR OF  .934
                           L =  .84  Kb = .052  Adj. Slope =   13.0

            SUBBASIN RUNOFF DATA

573 BA          SUBBASIN CHARACTERISTICS
                      TAREA          .17  SUBBASIN AREA

                PRECIPITATION DATA

32 PB                 STORM         3.92  BASIN TOTAL PRECIPITATION

32 PI             INCREMENTAL PRECIPITATION PATTERN
                    .00      .00      .00      .00      .00      .00      .00      .00      .00      .00
                    .00      .00      .00      .00      .00      .00      .00      .00      .00      .00
                    .00      .00      .00      .00      .00      .00      .00      .00      .00      .00
                    .00      .00      .00      .00      .00      .00      .00      .00      .00      .00
                    .00      .00      .00      .00      .00      .00      .00      .00      .00      .00
                    .00      .00      .00      .00      .00      .00      .00      .00      .00      .00
                    .00      .00      .00      .00      .00      .00      .00      .00      .00      .00
                    .00      .00      .00      .00      .00      .00      .00      .00      .00      .00
                    .00      .00      .00      .00      .00      .00      .00      .00      .00      .00
                    .00      .00      .00      .00      .00      .00      .00      .00      .00      .00
                    .00      .00      .00      .00      .00      .00      .00      .00      .00      .00
                    .00      .00      .00      .00      .00      .00      .00      .00      .00      .00
                    .00      .00      .00      .00      .00      .00      .00      .01      .00      .01
                    .01      .01      .01      .01      .01      .01      .01      .01      .03      .03
                    .03      .09      .09      .09      .01      .01      .01      .01      .01      .01
                    .01      .01      .01      .01      .01      .01      .00      .00      .00      .00
                    .00      .00      .00      .00      .00      .00      .00      .00      .00      .00
                    .00      .00      .00      .00      .00      .00      .00      .00      .00      .00
                    .00      .00      .00      .00      .00      .00      .00      .00      .00      .00
                    .00      .00      .00      .00      .00      .00      .00      .00      .00      .00
                    .00      .00      .00      .00      .00      .00      .00      .00      .00      .00
                    .00      .00      .00      .00      .00      .00      .00      .00      .00      .00
                    .00      .00      .00      .00      .00      .00      .00      .00      .00      .00
                    .00      .00      .00      .00      .00      .00      .00      .00      .00      .00
                    .00      .00      .00      .00      .00      .00      .00      .00      .00      .00
                    .00      .00      .00      .00      .00      .00      .00      .00      .00      .00
                    .00      .00      .00      .00      .00      .00      .00      .00      .00      .00
                    .00      .00      .00      .00      .00      .00      .00      .00      .00      .00
                    .00      .00      .00      .00      .00      .00      .00      .00

574 LG          GREEN AND AMPT LOSS RATE
                      STRTL          .28  STARTING LOSS
                        DTH          .25  MOISTURE DEFICIT
                       PSIF         4.80  WETTING FRONT SUCTION
                      XKSAT          .36  HYDRAULIC CONDUCTIVITY
                      RTIMP        21.00  PERCENT IMPERVIOUS AREA

575 UC          CLARK UNITGRAPH
                         TC          .83  TIME OF CONCENTRATION
                          R          .72  STORAGE COEFFICIENT

576 UA          ACCUMULATED-AREA VS. TIME,  11 ORDINATES
                    .0      5.0     16.0     30.0     65.0     77.0     84.0     90.0     94.0     97.0
                 100.0

                                                  ***

                                      UNIT HYDROGRAPH PARAMETERS
                                 CLARK   TC=   .83 HR,         R=   .72 HR
                                SNYDER   TP=   .49 HR,        CP=   .42

                                           UNIT HYDROGRAPH
                                     50 END-OF-PERIOD ORDINATES
              4.       15.       32.       64.       90.       94.       93.       90.       85.       80.
             73.       65.       58.       52.       46.       41.       37.       33.       29.       26.
             23.       20.       18.       16.       14.       13.       11.       10.        9.        8.
              7.        6.        6.        5.        5.        4.        4.        3.        3.        3.
              2.        2.        2.        2.        1.        1.        1.        1.        1.        1.

      ***            ***            ***            ***            ***

                      HYDROGRAPH AT STATION      IR65C

   TOTAL RAINFALL =      3.92, TOTAL LOSS =      2.23, TOTAL EXCESS =      1.69

 PEAK FLOW      TIME                           MAXIMUM AVERAGE FLOW
```

PEAK FLOW (CFS)	TIME (HR)		6-HR	24-HR	72-HR	24.92-HR
		(CFS)				
112.	12.33		26.	8.	7.	7.
		(INCHES)	1.443	1.681	1.682	1.682
		(AC-FT)	13.	15.	15.	15.

CUMULATIVE AREA = .17 SQ MI

*** ***

```
          **************
          *            *
578 KK    *    IR65R   *
          *            *
          **************
```

DIVERT RETENTION VOLUME

DT	DIVERSION ISTAD	RET65C	DIVERSION HYDROGRAPH IDENTIFICATION		
	DSTRMX	14.40	MAXIMUM VOLUME TO BE DIVERTED		
DI	INFLOW	.00	1000.00	10000.00	
DQ	DIVERTED FLOW	.00	1000.00	10000.00	

*** *** *** *** ***

DIVERSION HYDROGRAPH RET65C

PEAK FLOW (CFS)	TIME (HR)		6-HR	24-HR	72-HR	24.92-HR
		(CFS)				
112.	12.33		26.	7.	7.	7.
		(INCHES)	1.443	1.588	1.588	1.588
		(AC-FT)	13.	14.	14.	14.

CUMULATIVE AREA = .17 SQ MI

*** ***

HYDROGRAPH AT STATION IR65R

PEAK FLOW (CFS)	TIME (HR)		6-HR	24-HR	72-HR	24.92-HR
		(CFS)				
2.	17.17		1.	0.	0.	0.
		(INCHES)	.078	.094	.094	.094
		(AC-FT)	1.	1.	1.	1.

CUMULATIVE AREA = .17 SQ MI

*** ***

```
          **************
          *            *
583 KK    *   CIR65C   *
          *            *
          **************
```

COMBINE RETRIEVED ROUTED FLOW FROM SUB-BASIN IR63B TO RUNOFF FROM SUB-BASIN IR65C

586 HC	HYDROGRAPH COMBINATION ICOMP	2	NUMBER OF HYDROGRAPHS TO COMBINE

*** *** *** *** ***

HYDROGRAPH AT STATION CIR65C

PEAK FLOW (CFS)	TIME (HR)		6-HR	24-HR	72-HR	24.92-HR
		(CFS)				
112.	13.08		43.	14.	14.	14.
		(INCHES)	.495	.646	.646	.646
		(AC-FT)	21.	28.	28.	28.

CUMULATIVE AREA = .81 SQ MI

*** ***

```
          **************
          *            *
587 KK    *    RIRDC   *
          *            *
          **************
```

ROUTE FLOW FROM COMPUTATION POINT CIR65C TO COMPUTATION POINT CIRDC
CROSS-SECTION REVISED TO REFLECT URBANIZED CONDITIONS

HYDROGRAPH ROUTING DATA

590 RS	STORAGE ROUTING NSTPS	2	NUMBER OF SUBREACHES
	ITYP	ELEV	TYPE OF INITIAL CONDITION
	RSVRIC	-1.00	INITIAL CONDITION
	X	.00	WORKING R AND D COEFFICIENT
591 RC	NORMAL DEPTH CHANNEL ANL	.030	LEFT OVERBANK N-VALUE
	ANCH	.030	MAIN CHANNEL N-VALUE
	ANR	.030	RIGHT OVERBANK N-VALUE
	RLNTH	3200.	REACH LENGTH
	SEL	.0018	ENERGY SLOPE
	ELMAX	.0	MAX. ELEV. FOR STORAGE/OUTFLOW CALCULATION

CROSS-SECTION DATA

		--- LEFT OVERBANK ---		------ MAIN CHANNEL -------			--- RIGHT OVERBANK ---	
593 RY	ELEVATION	1014.50	1014.00	1013.00	1010.00	1010.00	1013.00	1014.00	1014.50
592 RX	DISTANCE	.00	1.00	10.00	20.00	30.00	40.00	50.00	51.00

***

COMPUTED STORAGE-OUTFLOW-ELEVATION DATA

STORAGE	.00	.19	.40	.65	.92	1.21	1.54	1.89	2.27	2.68
OUTFLOW	.00	1.96	6.40	12.99	21.70	32.57	45.66	61.07	78.89	99.22
ELEVATION	1010.00	1010.24	1010.47	1010.71	1010.95	1011.18	1011.42	1011.66	1011.89	1012.13
STORAGE	3.11	3.58	4.07	4.59	5.17	5.84	6.58	7.40	8.27	9.14
OUTFLOW	122.16	147.80	176.25	209.94	251.86	298.14	349.35	406.14	469.84	538.84
ELEVATION	1012.37	1012.60	1012.84	1013.08	1013.32	1013.55	1013.79	1014.03	1014.26	1014.50

*** *** *** *** ***

HYDROGRAPH AT STATION RIRDC

PEAK FLOW (CFS)	TIME (HR)		6-HR	24-HR	72-HR	24.92-HR
		(CFS)				
92.	13.58		42.	14.	13.	13.
		(INCHES)	.484	.634	.634	.634
		(AC-FT)	21.	27.	27.	27.

PEAK STORAGE (AC-FT)	TIME (HR)	MAXIMUM AVERAGE STORAGE 6-HR	24-HR	72-HR	24.92-HR
1.	13.58	1.	0.	0.	0.

PEAK STAGE (FEET)	TIME (HR)	MAXIMUM AVERAGE STAGE 6-HR	24-HR	72-HR	24.92-HR
1012.05	13.58	1011.30	1010.50	1010.48	1010.48

CUMULATIVE AREA = .81 SQ MI

*** ***

```
          **************
          *            *
594 KK    *   DIIRDC   *
          *            *
          **************
```

ROUTED FLOW FROM COMPUTATION POINT CIR65C IS SPLIT AT COMPUTATION POINT CIRDC

DT	DIVERSION ISTAD	RIR65C	DIVERSION HYDROGRAPH IDENTIFICATION							
DI	INFLOW	.00	16.00	34.00	51.00	71.00	80.00	100.00	120.00	150.00
DQ	DIVERTED FLOW	.00	16.00	25.00	32.00	40.00	49.00	69.00	89.00	119.00

***

*** *** *** *** ***

DIVERSION HYDROGRAPH RIR65C

```
PEAK FLOW    TIME                          MAXIMUM AVERAGE FLOW
                                   6-HR       24-HR      72-HR      24.92-HR
  (CFS)      (HR)
                         (CFS)
    61.      13.58                  29.        10.        10.         10.
                       (INCHES)    .332       .482       .482        .482
                        (AC-FT)     14.        21.        21.         21.

                       CUMULATIVE AREA =     .81 SQ MI


   ***          ***          ***          ***          ***

                   HYDROGRAPH AT STATION   DIIRDC

PEAK FLOW    TIME                          MAXIMUM AVERAGE FLOW
                                   6-HR       24-HR      72-HR      24.92-HR
  (CFS)      (HR)
                         (CFS)
    31.      13.33                  13.         3.         3.          3.
                       (INCHES)    .151       .152       .152        .152
                        (AC-FT)      7.         7.         7.          7.

                       CUMULATIVE AREA =     .81 SQ MI


*** *** *** *** *** *** *** *** *** *** *** *** *** *** *** *** *** *** *** *** *** *** *** *** *** *** *** *** *** *** *** *** *** ***


             **************
             *            *
  600 KK     *    IRDC    *
             *            *
             **************

                    SUB-BASIN IRDC
                    24-HOUR SCS TYPE II RAINFALL WAS USED TO FIND TC & R FOR THIS BASIN
                    THIS BASIN USED RAINFALL REDUCTION FACTOR OF  .934
                      L = 1.47  Kb = .038  Adj. Slope =   12.0

             SUBBASIN RUNOFF DATA

  605 BA       SUBBASIN CHARACTERISTICS
                     TAREA         .52  SUBBASIN AREA

               PRECIPITATION DATA

   32 PB             STORM        3.92  BASIN TOTAL PRECIPITATION

   32 PI         INCREMENTAL PRECIPITATION PATTERN
                     .00      .00      .00      .00      .00      .00      .00      .00      .00      .00
                     .00      .00      .00      .00      .00      .00      .00      .00      .00      .00
                     .00      .00      .00      .00      .00      .00      .00      .00      .00      .00
                     .00      .00      .00      .00      .00      .00      .00      .00      .00      .00
                     .00      .00      .00      .00      .00      .00      .00      .00      .00      .00
                     .00      .00      .00      .00      .00      .00      .00      .00      .00      .00
                     .00      .00      .00      .00      .00      .00      .00      .00      .00      .00
                     .00      .00      .00      .00      .00      .00      .00      .00      .00      .00
                     .00      .00      .00      .00      .00      .00      .00      .00      .00      .00
                     .00      .00      .00      .00      .00      .00      .00      .00      .00      .00
                     .00      .00      .00      .00      .00      .00      .00      .00      .00      .00
                     .00      .00      .00      .00      .00      .00      .00      .00      .00      .00
                     .00      .00      .00      .00      .00      .00      .00      .01      .00      .01
                     .01      .01      .01      .01      .01      .01      .01      .01      .03      .03
                     .03      .09      .09      .09      .01      .01      .01      .01      .01      .01
                     .01      .01      .01      .01      .01      .01      .00      .00      .00      .00
                     .00      .00      .00      .00      .00      .00      .00      .00      .00      .00
                     .00      .00      .00      .00      .00      .00      .00      .00      .00      .00
                     .00      .00      .00      .00      .00      .00      .00      .00      .00      .00
                     .00      .00      .00      .00      .00      .00      .00      .00      .00      .00
                     .00      .00      .00      .00      .00      .00      .00      .00      .00      .00
                     .00      .00      .00      .00      .00      .00      .00      .00      .00      .00
                     .00      .00      .00      .00      .00      .00      .00      .00      .00      .00
                     .00      .00      .00      .00      .00      .00      .00      .00      .00      .00
                     .00      .00      .00      .00      .00      .00      .00      .00      .00      .00
                     .00      .00      .00      .00      .00      .00      .00      .00      .00      .00
                     .00      .00      .00      .00      .00      .00      .00      .00      .00      .00
                     .00      .00      .00      .00      .00      .00      .00      .00      .00      .00
                     .00      .00      .00      .00      .00      .00      .00      .00

  606 LG       GREEN AND AMPT LOSS RATE
                     STRTL         .19  STARTING LOSS
                       DTH         .25  MOISTURE DEFICIT
                      PSIF        4.80  WETTING FRONT SUCTION
                     XKSAT         .37  HYDRAULIC CONDUCTIVITY
                     RTIMP       51.00  PERCENT IMPERVIOUS AREA

  607 UC       CLARK UNITGRAPH
                        TC         .96  TIME OF CONCENTRATION
                         R         .69  STORAGE COEFFICIENT

  608 UA       ACCUMULATED-AREA VS. TIME,  11 ORDINATES
                     .0       5.0     16.0     30.0     65.0     77.0     84.0     90.0     94.0     97.0
                  100.0
```



```
                                           ***

                                 UNIT HYDROGRAPH PARAMETERS
                            CLARK   TC=   .96 HR,        R=   .69 HR
                           SNYDER   TP=   .53 HR,       CP=   .44

                                      UNIT HYDROGRAPH
                                 49 END-OF-PERIOD ORDINATES
           10.      39.      81.     149.     235.     282.     285.     279.     267.     252.
          236.     218.     196.     174.     154.     137.     121.     108.      95.      85.
           75.      66.      59.      52.      46.      41.      36.      32.      29.      25.
           23.      20.      18.      16.      14.      12.      11.      10.       9.       8.
            7.       6.       5.       5.       4.       4.       3.       3.       3.

   ***          ***          ***          ***          ***

                   HYDROGRAPH AT STATION     IRDC

  TOTAL RAINFALL =    3.92, TOTAL LOSS =    1.38, TOTAL EXCESS =    2.54

PEAK FLOW    TIME                          MAXIMUM AVERAGE FLOW
                                   6-HR       24-HR      72-HR      24.92-HR
  (CFS)      (HR)
                         (CFS)
   397.      12.42                 110.        36.        34.         34.
                       (INCHES)   1.943      2.520      2.524       2.524
                        (AC-FT)     54.        71.        71.         71.

                       CUMULATIVE AREA =     .52 SQ MI


*** *** *** *** *** *** *** *** *** *** *** *** *** *** *** *** *** *** *** *** *** *** *** *** *** *** *** *** *** *** *** *** *** ***


             **************
             *            *
  610 KK     *    IRDR    *
             *            *
             **************
                    DIVERT RETENTION VOLUME

   DT          DIVERSION
                     ISTAD      RETRDC  DIVERSION HYDROGRAPH IDENTIFICATION
                    DSTRMX       43.20  MAXIMUM VOLUME TO BE DIVERTED

   DI                INFLOW        .00   1000.00  10000.00

   DQ          DIVERTED FLOW       .00   1000.00  10000.00

                                           ***

   ***          ***          ***          ***          ***

                   DIVERSION HYDROGRAPH   RETRDC

PEAK FLOW    TIME                          MAXIMUM AVERAGE FLOW
                                   6-HR       24-HR      72-HR      24.92-HR
  (CFS)      (HR)
                         (CFS)
   397.      12.42                  78.        22.        21.         21.
                       (INCHES)   1.377      1.543      1.543       1.543
                        (AC-FT)     39.        43.        43.         43.

                       CUMULATIVE AREA =     .52 SQ MI


   ***          ***          ***          ***          ***

                   HYDROGRAPH AT STATION     IRDR

PEAK FLOW    TIME                          MAXIMUM AVERAGE FLOW
                                   6-HR       24-HR      72-HR      24.92-HR
  (CFS)      (HR)
                         (CFS)
   225.      13.17                  47.        14.        13.         13.
                       (INCHES)    .829       .981       .981        .981
                        (AC-FT)     23.        27.        27.         27.

                       CUMULATIVE AREA =     .52 SQ MI


*** *** *** *** *** *** *** *** *** *** *** *** *** *** *** *** *** *** *** *** *** *** *** *** *** *** *** *** *** *** *** *** *** ***


             **************
             *            *
  615 KK     *   CIRDC    *
             *            *
             **************
                    COMBINE ROUTED FLOW FROM COMPUTATION POINT CIR65C TO RUNOFF FROM SUB-BASIN
                    IRDC
```

618 HC HYDROGRAPH COMBINATION
ICOMP 2 NUMBER OF HYDROGRAPHS TO COMBINE

***

*** *** *** *** ***

HYDROGRAPH AT STATION CIRDC

PEAK FLOW	TIME		MAXIMUM AVERAGE FLOW			
			6-HR	24-HR	72-HR	24.92-HR
(CFS)	(HR)					
		(CFS)				
234.	13.17		60.	17.	17.	17.
		(INCHES)	.418	.478	.478	.478
		(AC-FT)	30.	34.	34.	34.

CUMULATIVE AREA = 1.33 SQ MI

*** ***

619 KK * RIRSMC *

ROUTE FLOW COMPUTATION POINT CIRDC TO COMPUTATION POINT CIRSMC
CROSS-SECTION REVISED TO REFLECT URBANIZED CONDITIONS

HYDROGRAPH ROUTING DATA

622 RS STORAGE ROUTING
NSTPS 3 NUMBER OF SUBREACHES
ITYP ELEV TYPE OF INITIAL CONDITION
RSVRIC -1.00 INITIAL CONDITION
X .00 WORKING R AND D COEFFICIENT

623 RC NORMAL DEPTH CHANNEL
ANL .035 LEFT OVERBANK N-VALUE
ANCH .035 MAIN CHANNEL N-VALUE
ANR .035 RIGHT OVERBANK N-VALUE
RLNTH 3400. REACH LENGTH
SEL .0058 ENERGY SLOPE
ELMAX .0 MAX. ELEV. FOR STORAGE/OUTFLOW CALCULATION

CROSS-SECTION DATA

--- LEFT OVERBANK --- ------ MAIN CHANNEL ------- --- RIGHT OVERBANK ---

625 RY	ELEVATION	1006.00	1005.00	1004.00	999.00	999.00	1004.00	1005.00	1006.00
624 RX	DISTANCE	.00	40.00	60.00	70.00	80.00	90.00	110.00	150.00

***

COMPUTED STORAGE-OUTFLOW-ELEVATION DATA

STORAGE	.00	.31	.66	1.05	1.49	1.97	2.49	3.05	3.66	4.30
OUTFLOW	.00	6.24	20.27	40.88	67.90	101.40	141.56	188.60	242.77	304.35
ELEVATION	999.00	999.37	999.74	1000.11	1000.47	1000.84	1001.21	1001.58	1001.95	1002.32
STORAGE	4.99	5.73	6.50	7.32	8.21	9.47	11.15	13.36	16.40	20.29
OUTFLOW	373.60	450.80	536.24	630.18	743.23	885.51	1052.57	1246.97	1488.88	1792.29
ELEVATION	1002.68	1003.05	1003.42	1003.79	1004.16	1004.53	1004.89	1005.26	1005.63	1006.00

*** WARNING *** MODIFIED PULS ROUTING MAY BE NUMERICALLY UNSTABLE FOR OUTFLOWS BETWEEN 304. TO 1053.
THE ROUTED HYDROGRAPH SHOULD BE EXAMINED FOR OSCILLATIONS OR OUTFLOWS GREATER THAN PEAK INFLOWS.
THIS CAN BE CORRECTED BY DECREASING THE TIME INTERVAL OR INCREASING STORAGE (USE A LONGER REACH.)

*** *** *** *** ***

HYDROGRAPH AT STATION RIRSMC

PEAK FLOW	TIME		MAXIMUM AVERAGE FLOW			
			6-HR	24-HR	72-HR	24.92-HR
(CFS)	(HR)					
		(CFS)				
219.	13.42		59.	17.	16.	16.
		(INCHES)	.413	.475	.475	.475
		(AC-FT)	29.	34.	34.	34.

PEAK STORAGE	TIME	MAXIMUM AVERAGE STORAGE			
		6-HR	24-HR	72-HR	24.92-HR
(AC-FT)	(HR)				
1.	13.42	0.	0.	0.	0.

PEAK STAGE	TIME	MAXIMUM AVERAGE STAGE			
		6-HR	24-HR	72-HR	24.92-HR
(FEET)	(HR)				
1001.79	13.42	1000.22	999.41	999.40	999.40

CUMULATIVE AREA = 1.33 SQ MI

*** ***

626 KK * IRSMC *

SUB-BASIN IRSMC
24-HOUR SCS TYPE II RAINFALL WAS USED TO FIND TC & R FOR THIS BASIN
THIS BASIN USED RAINFALL REDUCTION FACTOR OF .934
L = .88 Kb = .043 Adj. Slope = 32.0

SUBBASIN RUNOFF DATA

631 BA SUBBASIN CHARACTERISTICS
TAREA .24 SUBBASIN AREA

PRECIPITATION DATA

32 PB STORM 3.92 BASIN TOTAL PRECIPITATION

32 PI INCREMENTAL PRECIPITATION PATTERN

.00	.00	.00	.00	.00	.00	.00	.00	.00	.00
.00	.00	.00	.00	.00	.00	.00	.00	.00	.00
.00	.00	.00	.00	.00	.00	.00	.00	.00	.00
.00	.00	.00	.00	.00	.00	.00	.00	.00	.00
.00	.00	.00	.00	.00	.00	.00	.00	.00	.00
.00	.00	.00	.00	.00	.00	.00	.00	.00	.00
.00	.00	.00	.00	.00	.00	.00	.00	.00	.00
.00	.00	.00	.00	.00	.00	.00	.00	.00	.00
.00	.00	.00	.00	.00	.00	.00	.00	.00	.00
.00	.00	.00	.00	.00	.00	.00	.00	.00	.00
.00	.00	.00	.00	.00	.00	.00	.00	.00	.00
.00	.00	.00	.00	.00	.00	.00	.00	.00	.00
.00	.00	.00	.00	.00	.00	.00	.01	.00	.01
.01	.01	.01	.01	.01	.01	.01	.01	.03	.03
.03	.09	.09	.09	.01	.01	.01	.01	.01	.01
.01	.01	.01	.01	.01	.01	.00	.00	.00	.00
.00	.00	.00	.00	.00	.00	.00	.00	.00	.00
.00	.00	.00	.00	.00	.00	.00	.00	.00	.00
.00	.00	.00	.00	.00	.00	.00	.00	.00	.00
.00	.00	.00	.00	.00	.00	.00	.00	.00	.00
.00	.00	.00	.00	.00	.00	.00	.00	.00	.00
.00	.00	.00	.00	.00	.00	.00	.00	.00	.00
.00	.00	.00	.00	.00	.00	.00	.00	.00	.00
.00	.00	.00	.00	.00	.00	.00	.00	.00	.00
.00	.00	.00	.00	.00	.00	.00	.00	.00	.00
.00	.00	.00	.00	.00	.00	.00	.00	.00	.00
.00	.00	.00	.00	.00	.00	.00	.00	.00	.00
.00	.00	.00	.00	.00	.00	.00	.00	.00	.00
.00	.00	.00	.00	.00	.00	.00	.00		

632 LG GREEN AND AMPT LOSS RATE
STRTL .21 STARTING LOSS
DTH .25 MOISTURE DEFICIT
PSIF 4.50 WETTING FRONT SUCTION
XKSAT .43 HYDRAULIC CONDUCTIVITY
RTIMP 34.00 PERCENT IMPERVIOUS AREA

633 UC CLARK UNITGRAPH
TC .48 TIME OF CONCENTRATION
R .33 STORAGE COEFFICIENT

634 UA ACCUMULATED-AREA VS. TIME, 11 ORDINATES

.0	5.0	16.0	30.0	65.0	77.0	84.0	90.0	94.0	97.0
100.0									

***

UNIT HYDROGRAPH PARAMETERS
CLARK TC= .48 HR, R= .33 HR
SNYDER TP= .30 HR, CP= .53

UNIT HYDROGRAPH
24 END-OF-PERIOD ORDINATES

27.	119.	228.	267.	244.	211.	172.	134.	104.	81.
63.	49.	38.	29.	23.	18.	14.	11.	8.	6.
5.	4.	3.	2.						

*** *** *** *** ***

HYDROGRAPH AT STATION IRSMC

TOTAL RAINFALL = 3.92, TOTAL LOSS = 1.89, TOTAL EXCESS = 2.03

PEAK FLOW	TIME		MAXIMUM AVERAGE FLOW			
			6-HR	24-HR	72-HR	24.92-HR
(CFS)	(HR)					
		(CFS)				
285.	12.17		42.	13.	13.	13.
		(INCHES)	1.636	2.020	2.023	2.023
		(AC-FT)	21.	26.	26.	26.

```
                      CUMULATIVE AREA =      .24 SQ MI


*** *** *** *** *** *** *** *** *** *** *** *** *** *** *** *** *** *** *** *** *** *** *** *** *** *** *** *** *** *** *** *** *** ***

             **************
             *            *
  636 KK     *    IRSMR   *
             *            *
             **************

                         DIVERT RETENTION VOLUME
                         RELAXED RETENTION VOLUME FROM 20.0 AC-FT

   DT          DIVERSION
                    ISTAD      RETSMC  DIVERSION HYDROGRAPH IDENTIFICATION
                   DSTRMX       19.10  MAXIMUM VOLUME TO BE DIVERTED

   DI              INFLOW         .00   1000.00  10000.00

   DQ        DIVERTED FLOW        .00   1000.00  10000.00
                                                                    ***

     ***            ***            ***            ***            ***

                        DIVERSION HYDROGRAPH    RETSMC

  PEAK FLOW     TIME                                 MAXIMUM AVERAGE FLOW
                                         6-HR        24-HR        72-HR      24.92-HR
    (CFS)       (HR)
                               (CFS)
     285.      12.17                      36.          10.          9.            9.
                            (INCHES)    1.371        1.486        1.486         1.486
                             (AC-FT)      18.          19.          19.           19.

                         CUMULATIVE AREA =     .24 SQ MI

     ***            ***            ***            ***            ***

                        HYDROGRAPH AT STATION    IRSMR

  PEAK FLOW     TIME                                 MAXIMUM AVERAGE FLOW
                                         6-HR        24-HR        72-HR      24.92-HR
    (CFS)       (HR)
                               (CFS)
      74.      12.83                      11.           3.           3.            3.
                            (INCHES)     .437         .537         .537          .537
                             (AC-FT)        6.           7.           7.            7.

                         CUMULATIVE AREA =     .24 SQ MI


*** *** *** *** *** *** *** *** *** *** *** *** *** *** *** *** *** *** *** *** *** *** *** *** *** *** *** *** *** *** *** *** *** ***

             **************
             *            *
  642 KK     *   CIRSMS   *
             *            *
             **************


  644 HC          HYDROGRAPH COMBINATION
                      ICOMP           2  NUMBER OF HYDROGRAPHS TO COMBINE
                                                                    ***

     ***            ***            ***            ***            ***

                        HYDROGRAPH AT STATION    CIRSMS

  PEAK FLOW     TIME                                 MAXIMUM AVERAGE FLOW
                                         6-HR        24-HR        72-HR      24.92-HR
    (CFS)       (HR)
                               (CFS)
     243.      13.42                      69.          21.          20.           20.
                            (INCHES)     .410         .484         .484          .484
                             (AC-FT)      34.          41.          41.           41.

                         CUMULATIVE AREA =    1.58 SQ MI


*** *** *** *** *** *** *** *** *** *** *** *** *** *** *** *** *** *** *** *** *** *** *** *** *** *** *** *** *** *** *** *** *** ***

             **************
             *            *
```



```
  645 KK     *   CIRSMC   *
             *            *
             **************
                               COMBINE FLOWS IN MARICOPA DRAIN JUST WEST OF 75TH AVE

  647 HC          HYDROGRAPH COMBINATION
                      ICOMP           2  NUMBER OF HYDROGRAPHS TO COMBINE
                                                                    ***

     ***            ***            ***            ***            ***

                        HYDROGRAPH AT STATION    CIRSMC

  PEAK FLOW     TIME                                 MAXIMUM AVERAGE FLOW
                                         6-HR        24-HR        72-HR      24.92-HR
    (CFS)       (HR)
                               (CFS)
    1018.      14.08                     533.         170.         164.          164.
                            (INCHES)     .485         .619         .619          .619
                             (AC-FT)     264.         337.         337.          337.

                         CUMULATIVE AREA =   10.21 SQ MI


*** *** *** *** *** *** *** *** *** *** *** *** *** *** *** *** *** *** *** *** *** *** *** *** *** *** *** *** *** *** *** *** *** ***

             **************
             *            *
  648 KK     *    CD2C    *
             *            *
             **************

                           SUB-BASIN CD2C
                           24-HOUR SCS TYPE II RAINFALL WAS USED TO FIND TC & R FOR THIS BASIN
                           THIS BASIN USED RAINFALL REDUCTION FACTOR OF  .934
                             L = 1.57  Kb = .043  Adj. Slope =     4.0

             SUBBASIN RUNOFF DATA

  653 BA       SUBBASIN CHARACTERISTICS
                    TAREA          .60  SUBBASIN AREA

               PRECIPITATION DATA

   32 PB            STORM         3.92  BASIN TOTAL PRECIPITATION

   32 PI         INCREMENTAL PRECIPITATION PATTERN
                   .00      .00      .00      .00      .00      .00      .00      .00      .00      .00
                   .00      .00      .00      .00      .00      .00      .00      .00      .00      .00
                   .00      .00      .00      .00      .00      .00      .00      .00      .00      .00
                   .00      .00      .00      .00      .00      .00      .00      .00      .00      .00
                   .00      .00      .00      .00      .00      .00      .00      .00      .00      .00
                   .00      .00      .00      .00      .00      .00      .00      .00      .00      .00
                   .00      .00      .00      .00      .00      .00      .00      .00      .00      .00
                   .00      .00      .00      .00      .00      .00      .00      .00      .00      .00
                   .00      .00      .00      .00      .00      .00      .00      .00      .00      .00
                   .00      .00      .00      .00      .00      .00      .00      .00      .00      .00
                   .00      .00      .00      .00      .00      .00      .00      .00      .00      .00
                   .00      .00      .00      .00      .00      .00      .00      .00      .00      .00
                   .00      .00      .00      .00      .00      .00      .00      .01      .00      .01
                   .01      .01      .01      .01      .01      .01      .01      .01      .03      .03
                   .03      .09      .09      .09      .01      .01      .01      .01      .01      .01
                   .01      .01      .01      .01      .01      .01      .00      .00      .00      .00
                   .00      .00      .00      .00      .00      .00      .00      .00      .00      .00
                   .00      .00      .00      .00      .00      .00      .00      .00      .00      .00
                   .00      .00      .00      .00      .00      .00      .00      .00      .00      .00
                   .00      .00      .00      .00      .00      .00      .00      .00      .00      .00
                   .00      .00      .00      .00      .00      .00      .00      .00      .00      .00
                   .00      .00      .00      .00      .00      .00      .00      .00      .00      .00
                   .00      .00      .00      .00      .00      .00      .00      .00      .00      .00
                   .00      .00      .00      .00      .00      .00      .00      .00      .00      .00
                   .00      .00      .00      .00      .00      .00      .00      .00      .00      .00
                   .00      .00      .00      .00      .00      .00      .00      .00      .00      .00
                   .00      .00      .00      .00      .00      .00      .00      .00      .00      .00
                   .00      .00      .00      .00      .00      .00      .00      .00      .00      .00
                   .00      .00      .00      .00      .00      .00      .00      .00

  654 LG       GREEN AND AMPT LOSS RATE
                    STRTL          .24  STARTING LOSS
                      DTH          .15  MOISTURE DEFICIT
                     PSIF         8.40  WETTING FRONT SUCTION
                    XKSAT          .09  HYDRAULIC CONDUCTIVITY
                    RTIMP        31.00  PERCENT IMPERVIOUS AREA

  655 UC       CLARK UNITGRAPH
                       TC         1.50  TIME OF CONCENTRATION
                        R         1.12  STORAGE COEFFICIENT

  656 UA       ACCUMULATED-AREA VS. TIME,  11 ORDINATES
                    .0       5.0      16.0      30.0      65.0      77.0      84.0      90.0      94.0      97.0
                 100.0

                                                                    ***
```

UNIT HYDROGRAPH PARAMETERS
CLARK TC= 1.50 HR, R= 1.12 HR
SNYDER TP= .82 HR, CP= .43

UNIT HYDROGRAPH
79 END-OF-PERIOD ORDINATES

5.	15.	30.	49.	70.	102.	152.	189.	202.	205.
203.	200.	196.	190.	184.	176.	169.	163.	154.	143.
132.	123.	114.	106.	98.	91.	84.	78.	73.	68.
63.	58.	54.	50.	46.	43.	40.	37.	34.	32.
30.	28.	26.	24.	22.	20.	19.	18.	16.	15.
14.	13.	12.	11.	10.	10.	9.	8.	8.	7.
7.	6.	6.	5.	5.	5.	4.	4.	4.	3.
3.	3.	3.	3.	2.	2.	2.	2.	2.	

*** *** *** *** ***

HYDROGRAPH AT STATION CD2C

TOTAL RAINFALL = 3.92, TOTAL LOSS = 1.53, TOTAL EXCESS = 2.39

PEAK FLOW	TIME		MAXIMUM AVERAGE FLOW			
			6-HR	24-HR	72-HR	24.92-HR
(CFS)	(HR)	(CFS)				
337.	12.75		128.	38.	37.	37.
		(INCHES)	1.996	2.368	2.369	2.369
		(AC-FT)	64.	76.	76.	76.

CUMULATIVE AREA = .60 SQ MI

*** ***

```
          **************
          *            *
658 KK    *     CD2R   *
          *            *
          **************
```

DIVERT RETENTION VOLUME
RELAXED RETENTION VOLUME FROM 44.8 AC-FT.

DT DIVERSION
ISTAD RET2C DIVERSION HYDROGRAPH IDENTIFICATION
DSTRMX 39.70 MAXIMUM VOLUME TO BE DIVERTED

DI INFLOW .00 1000.00 10000.00

DQ DIVERTED FLOW .00 1000.00 10000.00

***

*** *** *** *** ***

DIVERSION HYDROGRAPH RET2C

PEAK FLOW	TIME		MAXIMUM AVERAGE FLOW			
			6-HR	24-HR	72-HR	24.92-HR
(CFS)	(HR)	(CFS)				
337.	12.75		74.	20.	19.	19.
		(INCHES)	1.150	1.245	1.245	1.245
		(AC-FT)	37.	40.	40.	40.

CUMULATIVE AREA = .60 SQ MI

*** *** *** *** ***

HYDROGRAPH AT STATION CD2R

PEAK FLOW	TIME		MAXIMUM AVERAGE FLOW			
			6-HR	24-HR	72-HR	24.92-HR
(CFS)	(HR)	(CFS)				
262.	13.50		66.	18.	17.	17.
		(INCHES)	1.032	1.125	1.125	1.125
		(AC-FT)	33.	36.	36.	36.

CUMULATIVE AREA = .60 SQ MI

*** ***

```
          **************
          *            *
664 KK    *    CCD2C   *
          *            *
          **************
```


COMBINE FLOW FROM CD2C AND MARIOCPA DRAIN
MARICOPA DRAIN AT 1000 FT EAST OF 75TH AVE AND SOUTH MOUNTAIN AVE. (1/2 MILE BETWEEN DOBBINS AND BASELINE ROADS.)

668 HC HYDROGRAPH COMBINATION
ICOMP 2 NUMBER OF HYDROGRAPHS TO COMBINE

***

*** *** *** *** ***

HYDROGRAPH AT STATION CCD2C

PEAK FLOW	TIME		MAXIMUM AVERAGE FLOW			
			6-HR	24-HR	72-HR	24.92-HR
(CFS)	(HR)	(CFS)				
1199.	13.92		599.	188.	181.	181.
		(INCHES)	.515	.647	.647	.647
		(AC-FT)	297.	373.	373.	373.

CUMULATIVE AREA = 10.81 SQ MI

*** ***

```
          **************
          *            *
669 KK    *   RCD3C1   *
          *            *
          **************
```

MARICOPA DRAIN FROM JUST EAST OF 75TH AVE ALONG POWERLINE RD (INDIAN RESERVATION BOUNDARY).
ADJUST SLOPE FROM .0011 TO REFLECT A VELOCITY OF LESS THAN 5 FT/SEC

HYDROGRAPH ROUTING DATA

673 RS STORAGE ROUTING
NSTPS 2 NUMBER OF SUBREACHES
ITYP ELEV TYPE OF INITAL CONDITION
RSVRIC -1.00 INITIAL CONDITION
X .00 WORKING R AND D COEFFICIENT

674 RC NORMAL DEPTH CHANNEL
ANL .030 LEFT OVERBANK N-VALUE
ANCH .030 MAIN CHANNEL N-VALUE
ANR .030 RIGHT OVERBANK N-VALUE
RLNTH 3700. REACH LENGTH
SEL .0007 ENERGY SLOPE
ELMAX .0 MAX. ELEV. FOR STORAGE/OUTFLOW CALCULATION

CROSS-SECTION DATA

		--- LEFT OVERBANK ---		------ MAIN CHANNEL -------			--- RIGHT OVERBANK ---		
676 RY	ELEVATION	986.20	986.10	986.00	981.00	981.00	986.00	986.10	986.20
675 RX	DISTANCE	.00	10.00	20.00	45.00	165.00	190.00	200.00	210.00

***

COMPUTED STORAGE-OUTFLOW-ELEVATION DATA

STORAGE	.00	2.82	5.71	8.66	11.67	14.74	17.88	21.09	24.35	27.68
OUTFLOW	.00	18.26	58.18	114.79	186.14	271.09	368.87	478.94	600.91	734.45
ELEVATION	981.00	981.27	981.55	981.82	982.09	982.37	982.64	982.92	983.19	983.46
STORAGE	31.08	34.53	38.06	41.64	45.29	49.00	52.78	56.62	60.52	64.81
OUTFLOW	879.34	1035.39	1202.46	1380.43	1569.22	1768.76	1979.01	2199.93	2431.51	2694.91
ELEVATION	983.74	984.01	984.28	984.56	984.83	985.11	985.38	985.65	985.93	986.20

*** *** *** *** ***

HYDROGRAPH AT STATION RCD3C1

PEAK FLOW	TIME		MAXIMUM AVERAGE FLOW			
			6-HR	24-HR	72-HR	24.92-HR
(CFS)	(HR)	(CFS)				
1172.	14.33		591.	184.	177.	177.
		(INCHES)	.508	.632	.632	.632
		(AC-FT)	293.	364.	364.	364.

PEAK STORAGE	TIME		MAXIMUM AVERAGE STORAGE			
			6-HR	24-HR	72-HR	24.92-HR
(AC-FT)	(HR)					
19.	14.33		12.	4.	4.	4.

PEAK STAGE	TIME		MAXIMUM AVERAGE STAGE			
			6-HR	24-HR	72-HR	24.92-HR
(FEET)	(HR)					
984.23	14.33		983.09	981.76	981.73	981.73

CUMULATIVE AREA = 10.81 SQ MI

*** ***

```
          **************
          *            *
677 KK    *    A67AC   *
          *            *
          **************
                    SUB-BASIN A67AC
                    24-HOUR SCS TYPE II RAINFALL WAS USED TO FIND TC & R FOR THIS BASIN
                    THIS BASIN USED RAINFALL REDUCTION FACTOR OF  .934
                      L = 1.65  Kb = .042  Adj. Slope =    7.0

               SUBBASIN RUNOFF DATA

682 BA           SUBBASIN CHARACTERISTICS
                      TAREA         .62  SUBBASIN AREA

                 PRECIPITATION DATA

 32 PB                STORM       3.92  BASIN TOTAL PRECIPITATION

 32 PI              INCREMENTAL PRECIPITATION PATTERN
                     .00     .00     .00     .00     .00     .00     .00     .00     .00     .00
                     .00     .00     .00     .00     .00     .00     .00     .00     .00     .00
                     .00     .00     .00     .00     .00     .00     .00     .00     .00     .00
                     .00     .00     .00     .00     .00     .00     .00     .00     .00     .00
                     .00     .00     .00     .00     .00     .00     .00     .00     .00     .00
                     .00     .00     .00     .00     .00     .00     .00     .00     .00     .00
                     .00     .00     .00     .00     .00     .00     .00     .00     .00     .00
                     .00     .00     .00     .00     .00     .00     .00     .00     .00     .00
                     .00     .00     .00     .00     .00     .00     .00     .00     .00     .00
                     .00     .00     .00     .00     .00     .00     .00     .00     .00     .00
                     .00     .00     .00     .00     .00     .00     .00     .00     .00     .00
                     .00     .00     .00     .00     .00     .00     .00     .01     .00     .01
                     .01     .01     .01     .01     .01     .01     .01     .01     .03     .03
                     .03     .09     .09     .09     .01     .01     .01     .01     .01     .01
                     .01     .01     .01     .01     .01     .01     .00     .00     .00     .00
                     .00     .00     .00     .00     .00     .00     .00     .00     .00     .00
                     .00     .00     .00     .00     .00     .00     .00     .00     .00     .00
                     .00     .00     .00     .00     .00     .00     .00     .00     .00     .00
                     .00     .00     .00     .00     .00     .00     .00     .00     .00     .00
                     .00     .00     .00     .00     .00     .00     .00     .00     .00     .00
                     .00     .00     .00     .00     .00     .00     .00     .00     .00     .00
                     .00     .00     .00     .00     .00     .00     .00     .00

 683 LG          GREEN AND AMPT LOSS RATE
                       STRTL       .25  STARTING LOSS
                        DTH        .25  MOISTURE DEFICIT
                        PSIF      5.10  WETTING FRONT SUCTION
                       XKSAT       .32  HYDRAULIC CONDUCTIVITY
                       RTIMP     34.00  PERCENT IMPERVIOUS AREA

 684 UC          CLARK UNITGRAPH
                         TC       1.50  TIME OF CONCENTRATION
                          R       1.14  STORAGE COEFFICIENT

 685 UA          ACCUMULATED-AREA VS. TIME,  11 ORDINATES
                      .0      5.0     16.0     30.0     65.0     77.0     84.0     90.0     94.0     97.0
                   100.0

                                                ***

                                          UNIT HYDROGRAPH PARAMETERS
                                    CLARK   TC=  1.50 HR,       R=  1.14 HR
                                   SNYDER   TP=   .83 HR,      CP=   .42

                                          UNIT HYDROGRAPH
                                     81 END-OF-PERIOD ORDINATES
                      5.      15.     30.     50.     71.    104.    154.    192.    205.    208.
                    207.     204.    200.    195.    188.    181.    173.    167.    158.    147.
                    136.     127.    118.    110.    102.     95.     88.     82.     76.     71.
                     66.      61.     57.     53.     49.     46.     42.     39.     37.     34.
                     32.      29.     27.     25.     24.     22.     20.     19.     18.     16.
                     15.      14.     13.     12.     11.     11.     10.      9.      8.      8.
                      7.       7.      6.      6.      5.      5.      5.      4.      4.      4.
                      4.       3.      3.      3.      3.      2.      2.      2.      2.      2.
                      2.

    ***             ***             ***             ***             ***

                        HYDROGRAPH AT STATION     A67AC

   TOTAL RAINFALL =    3.92, TOTAL LOSS =    1.83, TOTAL EXCESS =    2.09

PEAK FLOW     TIME                          MAXIMUM AVERAGE FLOW
```



```
                                                    6-HR        24-HR       72-HR      24.92-HR
  (CFS)        (HR)
                          (CFS)
    291.       12.75                    111.         34.         33.         33.
                        (INCHES)         1.663       2.068       2.069       2.069
                        (AC-FT)           55.         68.         68.         68.

                      CUMULATIVE AREA =     .62 SQ MI
```

*** ***

```
          **************
          *            *
687 KK    *    A67AR   *
          *            *
          **************
                          DIVERT RETENTION VOLUME

    DT          DIVERSION
                      ISTAD      RET67A  DIVERSION HYDROGRAPH IDENTIFICATION
                     DSTRMX       38.40  MAXIMUM VOLUME TO BE DIVERTED

    DI             INFLOW          .00   1000.00  10000.00

    DQ       DIVERTED FLOW         .00   1000.00  10000.00

                                                                  ***

     ***             ***             ***             ***             ***

                          DIVERSION HYDROGRAPH    RET67A

PEAK FLOW     TIME                          MAXIMUM AVERAGE FLOW
                                                    6-HR        24-HR       72-HR      24.92-HR
  (CFS)        (HR)
                          (CFS)
    291.       12.75                     70.         19.         19.         19.
                        (INCHES)         1.059       1.165       1.165       1.165
                        (AC-FT)           35.         38.         38.         38.

                      CUMULATIVE AREA =     .62 SQ MI

     ***             ***             ***             ***             ***

                          HYDROGRAPH AT STATION     A67AR

PEAK FLOW     TIME                          MAXIMUM AVERAGE FLOW
                                                    6-HR        24-HR       72-HR      24.92-HR
  (CFS)        (HR)
                          (CFS)
    205.       13.58                     53.         15.         14.         14.
                        (INCHES)         .803        .904        .904        .904
                        (AC-FT)           26.         30.         30.         30.

                      CUMULATIVE AREA =     .62 SQ MI
```

*** ***

```
          **************
          *            *
692 KK    *   RCD4C1   *
          *            *
          **************
                    ROUTE FLOW FROM SUB-BASIN 67AC CPCD4C TO COMPUTATION POINT CPCD4C
                    CROSS-SECTION REVISED TO REFLECT URBANIZED CONDITIONS

               HYDROGRAPH ROUTING DATA

695 RS           STORAGE ROUTING
                      NSTPS          2  NUMBER OF SUBREACHES
                       ITYP       ELEV  TYPE OF INITIAL CONDITION
                      RSVRIC     -1.00  INITIAL CONDITION
                          X        .00  WORKING R AND D COEFFICIENT

696 RC           NORMAL DEPTH CHANNEL
                        ANL       .035  LEFT OVERBANK N-VALUE
                       ANCH       .035  MAIN CHANNEL N-VALUE
                        ANR       .035  RIGHT OVERBANK N-VALUE
                       RLNTH     2600.  REACH LENGTH
                        SEL      .0024  ENERGY SLOPE
                       ELMAX        .0  MAX. ELEV. FOR STORAGE/OUTFLOW CALCULATION

                                  CROSS-SECTION DATA
                          --- LEFT OVERBANK ---  ------ MAIN CHANNEL -------  --- RIGHT OVERBANK ---
698 RY       ELEVATION   988.00   987.00   986.00   983.00   983.00   986.00   987.00   988.00
697 RX       DISTANCE       .00    40.00    50.00    55.00    60.00    65.00    70.00   110.00
```

***

COMPUTED STORAGE-OUTFLOW-ELEVATION DATA

STORAGE	.00	.09	.18	.30	.42	.56	.72	.89	1.07	1.27
OUTFLOW	.00	1.15	3.73	7.55	12.59	18.89	26.49	35.45	45.84	57.71
ELEVATION	983.00	983.26	983.53	983.79	984.05	984.32	984.58	984.84	985.11	985.37
STORAGE	1.47	1.70	1.94	2.25	2.61	3.04	3.62	4.52	5.75	7.31
OUTFLOW	71.12	86.14	105.20	128.33	154.81	185.24	217.79	261.32	318.74	392.90
ELEVATION	985.63	985.90	986.16	986.42	986.68	986.95	987.21	987.47	987.74	988.00

*** *** *** *** ***

HYDROGRAPH AT STATION RCD4C1

PEAK FLOW	TIME		MAXIMUM AVERAGE FLOW			
			6-HR	24-HR	72-HR	24.92-HR
(CFS)	(HR)					
		(CFS)				
171.	13.92		53.	15.	14.	14.
		(INCHES)	.795	.897	.897	.897
		(AC-FT)	26.	30.	30.	30.

PEAK STORAGE	TIME		MAXIMUM AVERAGE STORAGE			
			6-HR	24-HR	72-HR	24.92-HR
(AC-FT)	(HR)					
1.	13.92		1.	0.	0.	0.

PEAK STAGE	TIME		MAXIMUM AVERAGE STAGE			
			6-HR	24-HR	72-HR	24.92-HR
(FEET)	(HR)					
986.82	13.92		985.02	983.68	983.65	983.65

CUMULATIVE AREA = .62 SQ MI

*** ***

```
              **************
              *            *
699 KK        *    CD4C    *
              *            *
              **************
```

SUB-BASIN CD4C
24-HOUR SCS TYPE II RAINFALL WAS USED TO FIND TC & R FOR THIS BASIN
THIS BASIN USED RAINFALL REDUCTION FACTOR OF .934
L = .64 Kb = .051 Adj. Slope = 9.0

SUBBASIN RUNOFF DATA

704 BA SUBBASIN CHARACTERISTICS
TAREA .19 SUBBASIN AREA

PRECIPITATION DATA

32 PB STORM 3.92 BASIN TOTAL PRECIPITATION

32 PI INCREMENTAL PRECIPITATION PATTERN

.00	.00	.00	.00	.00	.00	.00	.00	.00	.00
.00	.00	.00	.00	.00	.00	.00	.00	.00	.00
.00	.00	.00	.00	.00	.00	.00	.00	.00	.00
.00	.00	.00	.00	.00	.00	.00	.00	.00	.00
.00	.00	.00	.00	.00	.00	.00	.00	.00	.00
.00	.00	.00	.00	.00	.00	.00	.00	.00	.00
.00	.00	.00	.00	.00	.00	.00	.00	.00	.00
.00	.00	.00	.00	.00	.00	.00	.00	.00	.00
.00	.00	.00	.00	.00	.00	.00	.00	.00	.00
.00	.00	.00	.00	.00	.00	.00	.00	.00	.00
.00	.00	.00	.00	.00	.00	.00	.00	.00	.00
.00	.00	.00	.00	.00	.00	.00	.00	.00	.00
.00	.00	.00	.00	.00	.00	.00	.01	.00	.01
.01	.01	.01	.01	.01	.01	.01	.01	.03	.03
.03	.09	.09	.09	.01	.01	.01	.01	.01	.01
.01	.01	.01	.01	.01	.01	.00	.00	.00	.00
.00	.00	.00	.00	.00	.00	.00	.00	.00	.00
.00	.00	.00	.00	.00	.00	.00	.00	.00	.00
.00	.00	.00	.00	.00	.00	.00	.00	.00	.00
.00	.00	.00	.00	.00	.00	.00	.00	.00	.00
.00	.00	.00	.00	.00	.00	.00	.00	.00	.00
.00	.00	.00	.00	.00	.00	.00	.00	.00	.00
.00	.00	.00	.00	.00	.00	.00	.00	.00	.00
.00	.00	.00	.00	.00	.00	.00	.00	.00	.00
.00	.00	.00	.00	.00	.00	.00	.00	.00	.00
.00	.00	.00	.00	.00	.00	.00	.00	.00	.00
.00	.00	.00	.00	.00	.00	.00	.00	.00	.00
.00	.00	.00	.00	.00	.00	.00	.00	.00	.00
.00	.00	.00	.00	.00	.00	.00	.00		

705 LG GREEN AND AMPT LOSS RATE
STRTL .25 STARTING LOSS
DTH .25 MOISTURE DEFICIT

PSIF 4.90 WETTING FRONT SUCTION
XKSAT .35 HYDRAULIC CONDUCTIVITY
RTIMP 29.00 PERCENT IMPERVIOUS AREA

706 UC CLARK UNITGRAPH
TC .77 TIME OF CONCENTRATION
R .50 STORAGE COEFFICIENT

707 UA ACCUMULATED-AREA VS. TIME, 11 ORDINATES

.0	5.0	16.0	30.0	65.0	77.0	84.0	90.0	94.0	97.0
100.0									

***

UNIT HYDROGRAPH PARAMETERS
CLARK TC= .77 HR, R= .50 HR
SNYDER TP= .41 HR, CP= .47

UNIT HYDROGRAPH
36 END-OF-PERIOD ORDINATES

7.	26.	59.	107.	138.	137.	130.	120.	109.	97.
83.	70.	60.	50.	43.	36.	31.	26.	22.	18.
16.	13.	11.	9.	8.	7.	6.	5.	4.	3.
3.	2.	2.	2.	2.	1.				

*** *** *** *** ***

HYDROGRAPH AT STATION CD4C

TOTAL RAINFALL = 3.92, TOTAL LOSS = 1.99, TOTAL EXCESS = 1.93

PEAK FLOW	TIME		MAXIMUM AVERAGE FLOW			
			6-HR	24-HR	72-HR	24.92-HR
(CFS)	(HR)					
		(CFS)				
165.	12.33		32.	10.	9.	9.
		(INCHES)	1.589	1.916	1.918	1.918
		(AC-FT)	16.	19.	19.	19.

CUMULATIVE AREA = .19 SQ MI

*** ***

```
              **************
              *            *
709 KK        *    CD4R    *
              *            *
              **************
```

DIVERT RETENTION VOLUME

DT DIVERSION
ISTAD RETD4C DIVERSION HYDROGRAPH IDENTIFICATION
DSTRMX 13.60 MAXIMUM VOLUME TO BE DIVERTED

DI INFLOW .00 1000.00 10000.00

DQ DIVERTED FLOW .00 1000.00 10000.00

***

*** *** *** *** ***

DIVERSION HYDROGRAPH RETD4C

PEAK FLOW	TIME		MAXIMUM AVERAGE FLOW			
			6-HR	24-HR	72-HR	24.92-HR
(CFS)	(HR)					
		(CFS)				
165.	12.33		25.	7.	7.	7.
		(INCHES)	1.244	1.342	1.342	1.342
		(AC-FT)	13.	14.	14.	14.

CUMULATIVE AREA = .19 SQ MI

*** *** *** *** ***

HYDROGRAPH AT STATION CD4R

PEAK FLOW	TIME		MAXIMUM AVERAGE FLOW			
			6-HR	24-HR	72-HR	24.92-HR
(CFS)	(HR)					
		(CFS)				
62.	13.00		10.	3.	3.	3.
		(INCHES)	.491	.576	.576	.576
		(AC-FT)	5.	6.	6.	6.

CUMULATIVE AREA = .19 SQ MI

*** ***

714 KK * CPCD4C *

COMBINE ROUTED FLOW FROM SUB-BASIN 67AC TO RUNOFF FROM SUB-BASIN CD4C

716 HC HYDROGRAPH COMBINATION
ICOMP 2 NUMBER OF HYDROGRAPHS TO COMBINE

***

HYDROGRAPH AT STATION CPCD4C

PEAK FLOW (CFS)	TIME (HR)		6-HR	24-HR	72-HR	24.92-HR
			MAXIMUM AVERAGE FLOW			
189.	13.92	(CFS)	62.	18.	17.	17.
		(INCHES)	.711	.821	.821	.821
		(AC-FT)	31.	35.	35.	35.

CUMULATIVE AREA = .81 SQ MI

*** ***

717 KK * RCD3C2 *

ROUTE FLOW FROM COMPUTATION POINT CPCD4C TO COMPUTATION POINT CPCD3C
CROSS-SECTION REVISED TO REFLECT URBANIZED CONDITIONS

HYDROGRAPH ROUTING DATA

720 RS STORAGE ROUTING
NSTPS 3 NUMBER OF SUBREACHES
ITYP ELEV TYPE OF INITIAL CONDITION
RSVRIC -1.00 INITIAL CONDITION
X .00 WORKING R AND D COEFFICIENT

721 RC NORMAL DEPTH CHANNEL
ANL .035 LEFT OVERBANK N-VALUE
ANCH .035 MAIN CHANNEL N-VALUE
ANR .035 RIGHT OVERBANK N-VALUE
RLNTH 5200. REACH LENGTH
SEL .0024 ENERGY SLOPE
ELMAX .0 MAX. ELEV. FOR STORAGE/OUTFLOW CALCULATION

CROSS-SECTION DATA

		--- LEFT OVERBANK ---			------ MAIN CHANNEL -------		--- RIGHT OVERBANK ---		
723 RY	ELEVATION	988.00	987.00	986.00	983.00	983.00	986.00	987.00	988.00
722 RX	DISTANCE	.00	40.00	50.00	55.00	60.00	65.00	70.00	110.00

***

COMPUTED STORAGE-OUTFLOW-ELEVATION DATA

STORAGE	.00	.17	.37	.60	.85	1.13	1.44	1.77	2.14	2.53
OUTFLOW	.00	1.15	3.73	7.55	12.59	18.89	26.49	35.45	45.84	57.71
ELEVATION	983.00	983.26	983.53	983.79	984.05	984.32	984.58	984.84	985.11	985.37
STORAGE	2.95	3.40	3.89	4.49	5.23	6.08	7.24	9.04	11.50	14.63
OUTFLOW	71.12	86.14	105.20	128.33	154.81	185.24	217.79	261.32	318.74	392.90
ELEVATION	985.63	985.90	986.16	986.42	986.68	986.95	987.21	987.47	987.74	988.00

*** *** *** *** ***

HYDROGRAPH AT STATION RCD3C2

PEAK FLOW (CFS)	TIME (HR)		6-HR	24-HR	72-HR	24.92-HR
			MAXIMUM AVERAGE FLOW			
166.	14.33	(CFS)	61.	18.	17.	17.
		(INCHES)	.698	.808	.808	.808
		(AC-FT)	30.	35.	35.	35.

PEAK STORAGE (AC-FT)	TIME (HR)	6-HR	24-HR	72-HR	24.92-HR
		MAXIMUM AVERAGE STORAGE			
2.	14.33	1.	0.	0.	0.

PEAK STAGE	TIME	6-HR	24-HR	72-HR	24.92-HR
		MAXIMUM AVERAGE STAGE			

(FEET)	(HR)				
986.78	14.33	985.23	983.78	983.75	983.75

CUMULATIVE AREA = .81 SQ MI

*** ***

724 KK * CD3C *

SUB-BASIN CD3C
24-HOUR SCS TYPE II RAINFALL WAS USED TO FIND TC & R FOR THIS BASIN
THIS BASIN USED RAINFALL REDUCTION FACTOR OF .934
L = 1.15 Kb = .044 Adj. Slope = 10.0

SUBBASIN RUNOFF DATA

729 BA SUBBASIN CHARACTERISTICS
TAREA .48 SUBBASIN AREA

PRECIPITATION DATA

32 PB STORM 3.92 BASIN TOTAL PRECIPITATION

32 PI INCREMENTAL PRECIPITATION PATTERN

.00	.00	.00	.00	.00	.00	.00	.00	.00	.00
.00	.00	.00	.00	.00	.00	.00	.00	.00	.00
.00	.00	.00	.00	.00	.00	.00	.00	.00	.00
.00	.00	.00	.00	.00	.00	.00	.00	.00	.00
.00	.00	.00	.00	.00	.00	.00	.00	.00	.00
.00	.00	.00	.00	.00	.00	.00	.00	.00	.00
.00	.00	.00	.00	.00	.00	.00	.00	.00	.00
.00	.00	.00	.00	.00	.00	.00	.00	.00	.00
.00	.00	.00	.00	.00	.00	.00	.00	.00	.00
.00	.00	.00	.00	.00	.00	.00	.00	.00	.00
.00	.00	.00	.00	.00	.00	.00	.00	.00	.00
.00	.00	.00	.00	.00	.00	.00	.00	.00	.00
.00	.00	.00	.00	.00	.00	.00	.01	.00	.01
.01	.01	.01	.01	.01	.01	.01	.01	.03	.03
.03	.09	.09	.09	.01	.01	.01	.01	.01	.01
.01	.01	.01	.01	.01	.01	.00	.00	.00	.00
.00	.00	.00	.00	.00	.00	.00	.00	.00	.00
.00	.00	.00	.00	.00	.00	.00	.00	.00	.00
.00	.00	.00	.00	.00	.00	.00	.00	.00	.00
.00	.00	.00	.00	.00	.00	.00	.00	.00	.00
.00	.00	.00	.00	.00	.00	.00	.00	.00	.00
.00	.00	.00	.00	.00	.00	.00	.00	.00	.00
.00	.00	.00	.00	.00	.00	.00	.00	.00	.00
.00	.00	.00	.00	.00	.00	.00	.00	.00	.00
.00	.00	.00	.00	.00	.00	.00	.00	.00	.00
.00	.00	.00	.00	.00	.00	.00	.00	.00	.00
.00	.00	.00	.00	.00	.00	.00	.00	.00	.00
.00	.00	.00	.00	.00	.00	.00	.00	.00	.00
.00	.00	.00	.00	.00	.00	.00	.00		

730 LG GREEN AND AMPT LOSS RATE
STRTL .24 STARTING LOSS
DTH .15 MOISTURE DEFICIT
PSIF 7.00 WETTING FRONT SUCTION
XKSAT .14 HYDRAULIC CONDUCTIVITY
RTIMP 33.00 PERCENT IMPERVIOUS AREA

731 UC CLARK UNITGRAPH
TC .93 TIME OF CONCENTRATION
R .58 STORAGE COEFFICIENT

732 UA ACCUMULATED-AREA VS. TIME, 11 ORDINATES

.0	5.0	16.0	30.0	65.0	77.0	84.0	90.0	94.0	97.0
100.0									

***

UNIT HYDROGRAPH PARAMETERS
CLARK TC= .93 HR, R= .58 HR
SNYDER TP= .50 HR, CP= .48

UNIT HYDROGRAPH
42 END-OF-PERIOD ORDINATES

11.	44.	91.	171.	260.	298.	295.	283.	266.	246.
226.	204.	177.	154.	133.	115.	100.	86.	75.	65.
56.	48.	42.	36.	31.	27.	24.	20.	18.	15.
13.	11.	10.	9.	7.	6.	6.	5.	4.	4.
3.	3.								

*** *** *** *** ***

HYDROGRAPH AT STATION CD3C

TOTAL RAINFALL = 3.92, TOTAL LOSS = 1.60, TOTAL EXCESS = 2.32

PEAK FLOW	TIME		MAXIMUM AVERAGE FLOW 6-HR	24-HR	72-HR	24.92-HR
(CFS)	(HR)					
		(CFS)				
428.	12.42		100.	30.	29.	29.
		(INCHES)	1.935	2.307	2.310	2.310
		(AC-FT)	50.	59.	59.	59.

CUMULATIVE AREA = .48 SQ MI

*** ***

```
          **************
          *            *
734 KK    *     CD3R   *
          *            *
          **************
```

DIVERT RETENTION VOLUME
RELAXED RETENTION VOLUME FROM 35.2 AC-FT.

DT	DIVERSION ISTAD	RETD3C	DIVERSION HYDROGRAPH IDENTIFICATION	
	DSTRMX	32.60	MAXIMUM VOLUME TO BE DIVERTED	
DI	INFLOW	.00	1000.00	10000.00
DQ	DIVERTED FLOW	.00	1000.00	10000.00

*** *** *** *** ***

DIVERSION HYDROGRAPH RETD3C

PEAK FLOW	TIME		MAXIMUM AVERAGE FLOW 6-HR	24-HR	72-HR	24.92-HR
(CFS)	(HR)					
		(CFS)				
428.	12.42		60.	16.	16.	16.
		(INCHES)	1.171	1.273	1.273	1.273
		(AC-FT)	30.	33.	33.	33.

CUMULATIVE AREA = .48 SQ MI

*** *** *** *** ***

HYDROGRAPH AT STATION CD3R

PEAK FLOW	TIME		MAXIMUM AVERAGE FLOW 6-HR	24-HR	72-HR	24.92-HR
(CFS)	(HR)					
		(CFS)				
321.	12.83		48.	13.	13.	13.
		(INCHES)	.932	1.036	1.036	1.036
		(AC-FT)	24.	27.	27.	27.

CUMULATIVE AREA = .48 SQ MI

*** ***

```
          **************
          *            *
740 KK    *    CPCD3C  *
          *            *
          **************
```

COMBINE ROUTED FLOW FROM COMPUTATION POINT CPCD4C, ROUTED FLOW FROM DIVERSION POINT AT BASELINE ROAD WITH RUNOFF FROM SUB-BASIN CD3C

743 HC	HYDROGRAPH COMBINATION ICOMP	3	NUMBER OF HYDROGRAPHS TO COMBINE

***

*** *** *** *** ***

HYDROGRAPH AT STATION CPCD3C

PEAK FLOW	TIME		MAXIMUM AVERAGE FLOW 6-HR	24-HR	72-HR	24.92-HR
(CFS)	(HR)					
		(CFS)				
1383.	14.25		679.	215.	207.	207.
		(INCHES)	.522	.659	.659	.659
		(AC-FT)	337.	426.	426.	426.

CUMULATIVE AREA = 12.10 SQ MI

1

RUNOFF SUMMARY
FLOW IN CUBIC FEET PER SECOND
TIME IN HOURS, AREA IN SQUARE MILES

OPERATION	STATION	PEAK FLOW	TIME OF PEAK	AVERAGE FLOW FOR MAXIMUM PERIOD 6-HOUR	24-HOUR	72-HOUR	BASIN AREA	MAXIMUM STAGE	TIME OF MAX STAGE
HYDROGRAPH AT	VR47C	460.	12.67	152.	45.	44.	.87		
DIVERSION TO	RET47C	460.	14.25	127.	34.	33.	.87		
HYDROGRAPH AT	VR47R	157.	14.25	38.	11.	11.	.87		
ROUTED TO	RBR511	97.	14.92	36.	11.	10.	.87	1003.89	14.92
HYDROGRAPH AT	AVR51C	261.	12.33	55.	16.	16.	.28		
DIVERSION TO	RET51C	261.	13.00	41.	11.	10.	.28		
HYDROGRAPH AT	AVR51R	133.	13.00	19.	6.	5.	.28		
ROUTED TO	RBR512	82.	13.58	19.	5.	5.	.28	1008.64	13.58
HYDROGRAPH AT	BR51C	432.	12.58	122.	37.	36.	.70		
DIVERSION TO	RET159	432.	13.58	94.	25.	25.	.70		
HYDROGRAPH AT	BR51R	196.	13.58	40.	12.	11.	.70		
3 COMBINED AT	CB51C	278.	13.58	92.	28.	27.	1.85		
HYDROGRAPH AT	DR43C	1391.	12.17	176.	55.	53.	.92		
DIVERSION TO	RET43C	451.	12.17	45.	14.	14.	.92		
HYDROGRAPH AT	DR43R	1391.	12.17	150.	41.	39.	.92		
ROUTED TO	ROA51A	1376.	12.17	150.	41.	39.	.92		
HYDROGRAPH AT	ER47B	777.	12.00	63.	19.	18.	.34		
ROUTED TO	ERBASN	20.	11.75	20.	13.	12.	.34	4.39	13.00
ROUTED TO	RER47B	20.	24.92	20.	13.	12.	.34		
2 COMBINED AT	CER47B	1396.	12.17	170.	54.	52.	1.26		
ROUTED TO	ROA51B	1362.	12.17	171.	54.	52.	1.26		
HYDROGRAPH AT	OA51B	2353.	12.00	191.	57.	55.	1.03		
DIVERSION TO	RET51	2353.	12.17	153.	41.	39.	1.03		
HYDROGRAPH AT	OA51R	900.	12.17	55.	16.	16.	1.03		
2 COMBINED AT	CDR51	2262.	12.17	225.	70.	67.	2.29		
ROUTED TO	RDR51	2021.	12.25	225.	70.	67.	2.29		
ROUTED TO	BRBASN	50.	12.08	50.	28.	27.	2.29	7.28	18.17
ROUTED TO	DBR51	50.	12.25	50.	28.	27.	2.29		

2 COMBINED AT	CB51D	328.	13.58	142.	56.	54.	4.14		
ROUTED TO	RB1591	228.	14.25	140.	53.	51.	4.14	996.36	14.25
HYDROGRAPH AT	AVR55C	152.	12.58	51.	15.	14.	.24		
DIVERSION TO	RET55C	152.	15.17	48.	13.	12.	.24		
HYDROGRAPH AT	AVR55R	23.	15.17	7.	2.	2.	.24		
ROUTED TO	RB1592	13.	16.25	6.	2.	2.	.24	999.96	16.25
HYDROGRAPH AT	BR159C	300.	12.67	110.	33.	32.	.68		
DIVERSION TO	RET159	300.	13.67	73.	20.	19.	.68		
HYDROGRAPH AT	BR159R	193.	13.67	48.	14.	13.	.68		
HYDROGRAPH AT	VR59C	117.	12.75	39.	10.	10.	.23		
ROUTED TO	RB1593	114.	13.00	39.	10.	10.	.23	1000.83	13.00
4 COMBINED AT	CB159N	417.	14.08	218.	78.	75.	5.29		
HYDROGRAPH AT	OA55C	97.	12.75	37.	11.	10.	.25		
DIVERSION TO	RET55C	27.	12.75	4.	1.	1.	.25		
HYDROGRAPH AT	OA55R	97.	12.75	36.	9.	9.	.25		
ROUTED TO	RD57C	90.	13.17	35.	9.	9.	.25	1023.76	13.17
HYDROGRAPH AT	DR57C	40.	12.75	16.	5.	5.	.12		
DIVERSION TO	RET27	40.	.00	16.	5.	5.	.12		
HYDROGRAPH AT	DR57R	0.	.00	0.	0.	0.	.12		
2 COMBINED AT	CDR57C	90.	13.17	35.	9.	9.	.36		
ROUTED TO	RD59C	89.	13.33	35.	9.	9.	.36	1020.32	13.33
HYDROGRAPH AT	DR59C	45.	12.83	21.	7.	6.	.12		
DIVERSION TO	RET59C	45.	15.67	19.	5.	5.	.12		
HYDROGRAPH AT	DR59R	13.	15.67	5.	1.	1.	.12		
2 COMBINED AT	CDR59C	89.	13.33	38.	11.	10.	.48		
ROUTED TO	RB259	81.	13.83	37.	11.	10.	.48	1017.05	13.83
HYDROGRAPH AT	SM51C	327.	12.42	79.	22.	22.	.51		
DIVERSION TO	RET51C	327.	12.92	44.	12.	11.	.51		
HYDROGRAPH AT	SM51R	248.	12.92	40.	11.	10.	.51		
ROUTED TO	RB2591	198.	13.25	40.	11.	10.	.51		

							1028.07	13.25
ROUTED TO	RB2592	190.	13.42	40.	11.	10.	.51	
							1003.60	13.42
HYDROGRAPH AT	BR259C	778.	12.42	180.	55.	53.	1.01	
DIVERSION TO	RET259	778.	13.00	124.	34.	33.	1.01	
HYDROGRAPH AT	BR259R	456.	13.00	74.	21.	21.	1.01	
2 COMBINED AT	CB259A	474.	13.33	114.	32.	31.	1.52	
2 COMBINED AT	CB259S	523.	13.33	151.	43.	41.	2.00	
2 COMBINED AT	CB259	763.	13.67	369.	121.	117.	7.30	
ROUTED TO	RBR163	726.	14.00	366.	119.	115.	7.30	
							995.26	14.00
HYDROGRAPH AT	BR263C	294.	12.50	89.	28.	27.	.49	
DIVERSION TO	RET263	294.	13.08	53.	15.	14.	.49	
HYDROGRAPH AT	BR263R	218.	13.08	47.	13.	13.	.49	
2 COMBINED AT	63S	824.	13.92	412.	132.	127.	7.79	
HYDROGRAPH AT	BR163C	208.	12.33	43.	12.	12.	.25	
DIVERSION TO	RET163	163.	12.33	12.	3.	3.	.25	
HYDROGRAPH AT	BR163R	208.	12.33	34.	9.	9.	.25	
2 COMBINED AT	CB163	852.	13.92	430.	141.	136.	8.05	
ROUTED TO	RCD1C	843.	14.08	428.	139.	134.	8.05	
							993.74	14.08
HYDROGRAPH AT	BR67C	67.	12.67	23.	6.	6.	.13	
ROUTED TO	RCD1C2	63.	12.92	23.	6.	6.	.13	
							991.14	12.92
HYDROGRAPH AT	CD1C	552.	12.25	79.	24.	23.	.46	
DIVERSION TO	RET1C	552.	12.58	60.	16.	16.	.46	
HYDROGRAPH AT	CD1R	259.	12.58	27.	8.	8.	.46	
3 COMBINED AT	CPCD1C	896.	14.00	473.	153.	148.	8.64	
ROUTED TO	RCD2C1	887.	14.25	465.	149.	144.	8.64	
							987.88	14.25
HYDROGRAPH AT	ER55B	205.	12.42	46.	14.	13.	.26	
DIVERSION TO	RET55	205.	13.25	36.	10.	9.	.26	
HYDROGRAPH AT	ER55R	82.	13.25	13.	4.	4.	.26	
ROUTED TO	RE59B	55.	13.67	13.	4.	4.	.26	
							1021.79	13.67
HYDROGRAPH AT	ER59B	274.	12.25	64.	21.	21.	.26	
DIVERSION TO	RET59	274.	12.67	41.	12.	11.	.26	

HYDROGRAPH AT	ER59R	194.	12.67	33.	10.	9.	.26	
2 COMBINED AT	CER59B	194.	12.67	46.	14.	13.	.51	
DIVERSION TO	DIR63B	149.	12.58	18.	4.	4.	.51	
HYDROGRAPH AT	RIR63B	45.	12.58	28.	9.	9.	.51	
HYDROGRAPH AT	IR63B	127.	12.25	30.	10.	10.	.12	
DIVERSION TO	RET63	127.	12.75	20.	6.	5.	.12	
HYDROGRAPH AT	IR63	79.	12.75	16.	5.	4.	.12	
2 COMBINED AT	CIR63B	124.	12.75	43.	14.	13.	.64	
ROUTED TO	RIR65C	112.	13.08	43.	14.	13.	.64	
							4.31	13.08
HYDROGRAPH AT	IR65C	112.	12.33	26.	8.	7.	.17	
DIVERSION TO	RET65C	112.	17.17	26.	7.	7.	.17	
HYDROGRAPH AT	IR65R	2.	17.17	1.	0.	0.	.17	
2 COMBINED AT	CIR65C	112.	13.08	43.	14.	14.	.81	
ROUTED TO	RIRDC	92.	13.58	42.	14.	13.	.81	
							1012.05	13.58
DIVERSION TO	RIR65C	61.	13.33	29.	10.	10.	.81	
HYDROGRAPH AT	DIIRDC	31.	13.33	13.	3.	3.	.81	
HYDROGRAPH AT	IRDC	397.	12.42	110.	36.	34.	.52	
DIVERSION TO	RETRDC	397.	13.17	78.	22.	21.	.52	
HYDROGRAPH AT	IRDR	225.	13.17	47.	14.	13.	.52	
2 COMBINED AT	CIRDC	234.	13.17	60.	17.	17.	1.33	
ROUTED TO	RIRSMC	219.	13.42	59.	17.	16.	1.33	
							1001.79	13.42
HYDROGRAPH AT	IRSMC	285.	12.17	42.	13.	13.	.24	
DIVERSION TO	RETSMC	285.	12.83	36.	10.	9.	.24	
HYDROGRAPH AT	IRSMR	74.	12.83	11.	3.	3.	.24	
2 COMBINED AT	CIRSMS	243.	13.42	69.	21.	20.	1.58	
2 COMBINED AT	CIRSMC	1018.	14.08	533.	170.	164.	10.21	
HYDROGRAPH AT	CD2C	337.	12.75	128.	38.	37.	.60	
DIVERSION TO	RET2C	337.	13.50	74.	20.	19.	.60	
HYDROGRAPH AT	CD2R	262.	13.50	66.	18.	17.	.60	
2 COMBINED AT	CCD2C	1199.	13.92	599.	188.	181.	10.81	
ROUTED TO								

	RCD3C1	1172.	14.33	591.	184.	177.	10.81	984.23	14.33
HYDROGRAPH AT	A67AC	291.	12.75	111.	34.	33.	.62		
DIVERSION TO	RET67A	291.	13.58	70.	19.	19.	.62		
HYDROGRAPH AT	A67AR	205.	13.58	53.	15.	14.	.62		
ROUTED TO	RCD4C1	171.	13.92	53.	15.	14.	.62	986.82	13.92
HYDROGRAPH AT	CD4C	165.	12.33	32.	10.	9.	.19		
DIVERSION TO	RETD4C	165.	13.00	25.	7.	7.	.19		
HYDROGRAPH AT	CD4R	62.	13.00	10.	3.	3.	.19		
2 COMBINED AT	CPCD4C	189.	13.92	62.	18.	17.	.81		
ROUTED TO	RCD3C2	166.	14.33	61.	18.	17.	.81	986.78	14.33
HYDROGRAPH AT	CD3C	428.	12.42	100.	30.	29.	.48		
DIVERSION TO	RETD3C	428.	12.83	60.	16.	16.	.48		
HYDROGRAPH AT	CD3R	321.	12.83	48.	13.	13.	.48		
3 COMBINED AT	CPCD3C	1383.	14.25	679.	215.	207.	12.10		

1

SUMMARY OF KINEMATIC WAVE - MUSKINGUM-CUNGE ROUTING
(FLOW IS DIRECT RUNOFF WITHOUT BASE FLOW)

ISTAQ	ELEMENT	DT	PEAK	TIME TO PEAK	VOLUME	DT	INTERPOLATED TO COMPUTATION INTERVAL PEAK	TIME TO PEAK	VOLUME
		(MIN)	(CFS)	(MIN)	(IN)	(MIN)	(CFS)	(MIN)	(IN)
ROA51A	MANE	.73	1385.98	731.32	1.65	5.00	1375.80	730.00	1.65

CONTINUITY SUMMARY (AC-FT) - INFLOW= .8086E EXCESS= .0000E OUTFLOW= .8091E BASIN STORAGE= .4091E-02 PERCENT ERROR= -.1

RER47B	MANE	3.21	20.03	1496.37	1.39	5.00	20.02	1495.00	1.39

CONTINUITY SUMMARY (AC-FT) - INFLOW= .2543E EXCESS= .0000E OUTFLOW= .2524E BASIN STORAGE= .1999E PERCENT ERROR= -.1

ROA51B	MANE	.75	1391.42	731.41	1.58	5.00	1362.31	730.00	1.58

CONTINUITY SUMMARY (AC-FT) - INFLOW= .1063E EXCESS= .0000E OUTFLOW= .1062E BASIN STORAGE= .9683E-01 PERCENT ERROR= .0

RDR51	MANE	.75	2247.80	731.59	1.13	5.00	2021.31	735.00	1.13

CONTINUITY SUMMARY (AC-FT) - INFLOW= .1388E EXCESS= .0000E OUTFLOW= .1386E BASIN STORAGE= .4037E PERCENT ERROR= -.1

DBR51	MANE	1.68	50.00	732.03	.46	5.00	50.00	735.00	.46

CONTINUITY SUMMARY (AC-FT) - INFLOW= .5592E EXCESS= .0000E OUTFLOW= .5562E BASIN STORAGE= .2459E PERCENT ERROR= .1

*** NORMAL END OF HEC-1 ***

APPENDIX G: HEC Model Output for Recommended Plan

```
1*************************************
 *                                   *
 *   FLOOD HYDROGRAPH PACKAGE  (HEC-1)   *
 *             JUN 09 1992           *
 *           VERSION 4.0.3E          *
 *                                   *
 *  RUN DATE  10/17/01  TIME  11:24:12   *
 *                                   *
 *************************************
```

```
*************************************
*                                   *
*   U.S. ARMY CORPS OF ENGINEERS    *
*   HYDROLOGIC ENGINEERING CENTER   *
*        609 SECOND STREET          *
*      DAVIS, CALIFORNIA 95616      *
*          (916) 551-1748           *
*                                   *
*************************************
```

```
X     X  XXXXXXX   XXXXX          X
X     X  X        X     X        XX
X     X  X        X              X
XXXXXXX  XXXX     X        XXXXX  X
X     X  X        X              X
X     X  X        X     X        X
X     X  XXXXXXX   XXXXX         XXX
```

THIS PROGRAM REPLACES ALL PREVIOUS VERSIONS OF HEC-1 KNOWN AS HEC1 (JAN 73), HEC1GS, HEC1DB, AND HEC1KW.

THE DEFINITIONS OF VARIABLES -RTIMP- AND -RTIOR- HAVE CHANGED FROM THOSE USED WITH THE 1973-STYLE INPUT STRUCTURE.
THE DEFINITION OF -AMSKK- ON RM-CARD WAS CHANGED WITH REVISIONS DATED 28 SEP 81. THIS IS THE FORTRAN77 VERSION
NEW OPTIONS: DAMBREAK OUTFLOW SUBMERGENCE , SINGLE EVENT DAMAGE CALCULATION, DSS:WRITE STAGE FREQUENCY,
DSS:READ TIME SERIES AT DESIRED CALCULATION INTERVAL LOSS RATE:GREEN AND AMPT INFILTRATION
KINEMATIC WAVE: NEW FINITE DIFFERENCE ALGORITHM

1 HEC-1 INPUT PAGE 1

```
LINE          ID.....1.....2.....3.....4.....5.....6.....7.....8.....9.....10
   1          ID       LAVEEN ADMS 100-YEAR 24-HOUR SCS TYPE II RAINFALL  CBA FILE#40916-02-30 3
   2          ID       SOUTHWEST SOUTH MOUNTAIN WATERSHED (FINAL HEC-1)   SEPTEMBER 30, 1991
   3          ID       HEC-1 FILE NAME IS SWSM.NEW24
   4          IT       5                    300
   5          IO       3       0
              *DIAGRAM
   6          KK   SWSM1-LAND USE- NATURAL DESERT(MOUNTAIN)
   7          KM   SUB-BASIN SWSM1
   8          KM   24-HOUR SCS TYPE II RAINFALL WAS USED TO FINED TC & R FOR THIS BASIN
   9          KM   THIS BASIN USED RAINFALL REDUCTION FACTOR OF .99
  10          BA   1.990
  11          IN     30
  12          KM   RAINFALL DEPTH OF 4.20 WAS SPACIALLY REDUCED AS SHOWN BY THE PB RECORD
  13          PB   4.158
  14          KM   THE FOLLOWING PC RECORD USED A 24-HR SCS TYPE STORM
  15          PC    .000    .005    .011    .016    .022    .028    .035    .041    .048    .056
  16          PC    .068    .071    .080    .089    .098    .109    .120    .133    .147    .163
  17          PC    .181    .204    .235    .283    .663    .735    .772    .799    .820    .838
  18          PC    .854    .868    .880    .891    .902    .912    .921    .929    .937    .945
  19          PC    .952    .959    .965    .972    .978    .984    .989    .995   1.000
  20          LG    .150    .345   3.550    .686  60.000
  21          UC    .483    .249
  22          UA       0       3       5       8      12      20      43      75      90      96
  23          UA     100
  24          KK   RSWSM1
  25          KM   ROUTE FLOW FROM SUB-BASIN SWSM1 TO COMPUTATION POINT SWSM4
  26          RS       2    ELEV    1168
  27          RC   0.040   0.050   0.040    8600    0.02    1174
  28          RX       0      30      40      50      80     100     110     210
  29          RY    1174    1172    1170    1168    1168    1170    1172    1174
  30          KK   SWSM4
  31          KM   SUB-BASIN SWSM4-LAND USE- NATURAL DESERT(HILLSLOPE)
  32          KM   24-HOUR SCS TYPE II RAINFALL WAS USED TO FINED TC & R FOR THIS BASIN
  33          KM   THIS BASIN USED RAINFALL REDUCTION FACTOR OF .99
  34          BA    .340
  35          LG    .150    .350   3.750    .293    .000
  36          UC    .583    .556
  37          UA       0       3       5       8      12      20      43      75      90      96
  38          UA     100
  39          KK   CSWSM1
  40          KM   COMBINE ROUTED FLOW FROM SUB-BASIN SWSM1 AND SWSM4
  41          HC       2
  42          KK   DSWSM4
  43          KM   RUNOFF FROM COMPUTATION POINT CSWSM1 DRAINS OUTSIDE OF THE STUDY AREA
  44          KM   HYDROGRAPH IS DIVERTED
  45          DT   DIV.4
  46          DI       0     100     500    1000    2000    2500    3000    3500
  47          DQ       0     100     500    1000    2000    2500    3000    3500
```

1 HEC-1 INPUT PAGE 2

```
LINE          ID.....1.....2.....3.....4.....5.....6.....7.....8.....9.....10
  48          KK   SWSM2
  49          KM   SUB-BASIN SWSM2-LAND USE- NATURAL DESERT(HILLSLOPE,MOUNTAIN)
  50          KM   24-HOUR SCS TYPE II RAINFALL WAS USED TO FINED TC & R FOR THIS BASIN
  51          KM   THIS BASIN USED RAINFALL REDUCTION FACTOR OF 1.00
  52          BA    .440
  53          IN     30
  54          KM   RAINFALL DEPTH OF 4.20 WAS SPACIALLY REDUCED AS SHOWN BY THE PB RECORD
  55          PB   4.20
  56          KM   THE FOLLOWING PC RECORD USED A 24-HR SCS TYPE STORM
  57          PC    .000    .005    .011    .016    .022    .028    .035    .041    .048    .056
  58          PC    .068    .071    .080    .089    .098    .109    .120    .133    .147    .163
  59          PC    .181    .204    .235    .283    .663    .735    .772    .799    .820    .838
  60          PC    .854    .868    .880    .891    .902    .912    .921    .929    .937    .945
  61          PC    .952    .959    .965    .972    .978    .984    .989    .995   1.000
  62          LG    .150    .263   3.100    .942  25.000
  63          UC    .417    .330
  64          UA       0       3       5       8      12      20      43      75      90      96
  65          UA     100
  66          KK   DSWSM2
  67          KM   RUNOFF FROM SUB-BASIN SWSM2 DRAINS OUTSIDE OF THE STUDY AREA.
  68          KM   HYDROGRAPH IS DIVERTED
  69          DT   DIV.2
  70          DI       0     100     200     500    1000    1500    2000    2500
  71          DQ       0     100     200     500    1000    1500    2000    2500
  72          KK   SWSM3
  73          KM   SUB-BASIN SWSM3-LAND USE- NATURAL DESERT(HILLSLOPE)
  74          KM   24-HOUR SCS TYPE II RAINFALL WAS USED TO FINED TC & R FOR THIS BASIN
  75          KM   THIS BASIN USED RAINFALL REDUCTION FACTOR OF1.00
  76          BA    .280
  77          IN     30
  78          KM   RAINFALL DEPTH OF 4.20 WAS SPACIALLY REDUCED AS SHOWN BY THE PB RECORD
  79          PB   4.200
  80          KM   THE FOLLOWING PC RECORD USED A 24-HR SCS TYPE STORM
  81          PC    .000    .005    .011    .016    .022    .028    .035    .041    .048    .056
  82          PC    .068    .071    .080    .089    .098    .109    .120    .133    .147    .163
  83          PC    .181    .204    .235    .283    .663    .735    .772    .799    .820    .838
  84          PC    .854    .868    .880    .891    .902    .912    .921    .929    .937    .945
  85          PC    .952    .959    .965    .972    .978    .984    .989    .995   1.000
  86          LG    .150    .300   3.750    .633    .000
  87          UC    .617    .534
  88          UA       0       3       5       8      12      20      43      75      90      96
  89          UA     100
  90          KK   DSWSM3
  91          KM   RUNOFF FROM SUB-BASIN SWSM3 DRAINS OUTSIDE OF THE STUDY AREA.
  92          KM   HYDROGRAPH IS DIVERTED
  93          DT   DIV.3
  94          DI       0      50     200     300     400     500     700    1000
  95          DQ       0      50     200     300     400     500     700    1000
```

1 HEC-1 INPUT PAGE 3

```
LINE          ID.....1.....2.....3.....4.....5.....6.....7.....8.....9.....10
  96          KK   SWSM5
  97          KM   SUB-BASIN SWSM5-LAND USE- NATURAL DESERT(HILLSLOPE)
  98          KM   24-HOUR SCS TYPE II RAINFALL WAS USED TO FINED TC & R FOR THIS BASIN
  99          KM   THIS BASIN USED RAINFALL REDUCTION FACTOR OF1.00
 100          BA    .090
 101          IN     30
 102          KM   RAINFALL DEPTH OF 4.20 WAS SPACIALLY REDUCED AS SHOWN BY THE PB RECORD
 103          PB    4.20
 104          KM   THE FOLLOWING PC RECORD USED A 24-HR SCS TYPE STORM
 105          PC    .000    .005    .011    .016    .022    .028    .035    .041    .048    .056
 106          PC    .068    .071    .080    .089    .098    .109    .120    .133    .147    .163
 107          PC    .181    .204    .235    .283    .663    .735    .772    .799    .820    .838
 108          PC    .854    .868    .880    .891    .902    .912    .921    .929    .937    .945
 109          PC    .952    .959    .965    .972    .978    .984    .989    .995   1.000
 110          LG    .150    .250   8.600    .066    .000
 111          UC    .433    .516
 112          UA       0       3       5       8      12      20      43      75      90      96
 113          UA     100
 114          KK   DSWSM5
 115          KM   RUNOFF FROM SUB-BASIN SWSM5 DRAINS OUTSIDE OF THE STUTY AREA.
 116          KM   HYDROGRAPH IS DIVERTED
 117          DT   DIV.5
 118          DI       0      10      50      70     100     150     200     300
 119          DQ       0      10      50      70     100     150     200     300
 120          KK   SWSM6
 121          KM   SUB-BASIN SWSM6-LAND USE- NATURAL DESERT(HILLSLOPE,MOUNTAINS)
 122          KM   24-HOUR SCS TYPE II RAINFALL WAS USED TO FINED TC & R FOR THIS BASIN
 123          KM   THIS BASIN USED RAINFALL REDUCTION FACTOR OF 1.00
 124          BA    .950
 125          IN     30
 126          KM   RAINFALL DEPTH OF 4.20 WAS SPACIALLY REDUCED AS SHOWN BY THE PB RECORD
 127          PB    4.20
 128          KM   THE FOLLOWING PC RECORD USED A 24-HR SCS TYPE STORM
 129          PC    .000    .005    .011    .016    .022    .028    .035    .041    .048    .056
 130          PC    .068    .071    .080    .089    .098    .109    .120    .133    .147    .163
 131          PC    .181    .204    .235    .283    .663    .735    .772    .799    .820    .838
```

```
  132          PC    .854    .868    .880    .891    .902    .912    .921    .929    .937    .945
  133          PC    .952    .959    .965    .972    .978    .984    .989    .995   1.000
  134          LG    .150    .316   4.950    .564  40.000
  135          UC    .467    .357
  136          UA       0       3       5       8      12      20      43      75      90      96
  137          UA     100

  138          KK   DSWSM6
  139          KM   RUNOFF FROM SUB-BASIN SWSM6 DRAINS OUTSIDE OF THE STUDY AREA.
  140          KM   HYDROGRAPH IS DIVERTED
  141          DT   DIV.6
  142          DI       0     100     500    1000    1500    2000    2500    3000
  143          DQ       0     100     500    1000    1500    2000    2500    3000
1                                   HEC-1 INPUT                                    PAGE  4

LINE           ID.......1.......2.......3.......4.......5.......6.......7.......8.......9......10

  144          KK   SWSM7
  145          KM   SUB-BASIN SWSM7-LAND USE- NATURAL DESERT(HILLSLOPE,MOUNTAIN)
  146          KM   24-HOUR SCS TYPE II RAINFALL WAS USED TO FINED TC & R FOR THIS BASIN
  147          KM   THIS BASIN USED RAINFALL REDUCTION FACTOR OF1.00
  148          BA    .100
  149          IN     30
  150          KM   RAINFALL DEPTH OF 4.20 WAS SPACIALLY REDUCED AS SHOWN BY THE PB RECORD
  151          PB   4.200
  152          KM   THE FOLLOWING PC RECORD USED A 24-HR SCS TYPE STORM
  153          PC    .000    .005    .011    .016    .022    .028    .035    .041    .048    .056
  154          PC    .068    .071    .080    .089    .098    .109    .120    .133    .147    .163
  155          PC    .181    .204    .235    .283    .663    .735    .772    .799    .820    .838
  156          PC    .854    .868    .880    .891    .902    .912    .921    .929    .937    .945
  157          PC    .952    .959    .965    .972    .978    .984    .989    .995   1.000
  158          UC    .183    .141
  159          UA       0       3       5       8      12      20      43      75      90      96
  160          UA     100

  161          KK   DSWSM7
  162          KM   RUNOFF FROM SUB-BASIN SWSM7 DRAINS OUTSIDE OF STUDY AREA.
  163          KM   HYDROGRAPH IS DIVERTED
  164          DT   DIV.7
  165          DI       0      50     100     200     500     700     800    1000
  166          DQ       0      50     100     200     500     700     800    1000

  167          KK   SWSM8
  168          KM   SUB-BASIN SWSM8-LAND USE- NATURAL DESERT(MOUNTAIN)
  169          KM   24-HOUR SCS TYPE II RAINFALL WAS USED TO FINED TC & R FOR THIS BASIN
  170          KM   THIS BASIN USED RAINFALL REDUCTION FACTOR OF1.00
  171          BA    .030
  172          IN     30
  173          KM   RAINFALL DEPTH OF 4.20 WAS SPACIALLY REDUCED AS SHOWN BY THE PB RECORD
  174          PB   4.200
  175          KM   THE FOLLOWING PC RECORD USED A 24-HR SCS TYPE STORM
  176          PC    .000    .005    .011    .016    .022    .028    .035    .041    .048    .056
  177          PC    .068    .071    .080    .089    .098    .109    .120    .133    .147    .163
  178          PC    .181    .204  - .235    .283    .663    .735    .772    .799    .820    .838
  179          PC    .854    .868    .880    .891    .902    .912    .921    .929    .937    .945
  180          PC    .952    .959    .965    .972    .978    .984    .989    .995   1.000
  181          UC    .150    .175
  182          UA       0       3       5       8      12      20      43      75      90      96
  183          UA     100

  184          KK   DSWSM8
  185          KM   RUNOFF FROM SUB-BASIN SWSM8 DRAINS OUTSIDE OF THE STUDY AREA.
  186          KM   HYDROGRAPH IS DIVERTED
  187          DT   DIV.8
  188          DI       0      10      30      50      70      90     150
  189          DQ       0      10      30      50      70      90     150
  190          ZZ
1
          SCHEMATIC DIAGRAM OF STREAM NETWORK

 INPUT
  LINE     (V) ROUTING          (--->) DIVERSION OR PUMP FLOW

   NO.     (.) CONNECTOR        (<---) RETURN OF DIVERTED OR PUMPED FLOW
    .
     6     SWSM1
               V
               V
    24     RSWSM
               .
               .
    30         .       SWSM4
               .           .
               .           .
    39     CSWSM............
               .
               .
    45         .------->   DIV.4
    42     DSWSM
               .
               .
    48         .       SWSM2
               .           .
               .           .
    69         .           .-------->   DIV.2
    66         .       DSWSM
               .           .
               .           .
    72         .           .       SWSM3
               .           .           .
               .           .           .
    93         .           .           .------->   DIV.3
    90         .           .       DSWSM
               .           .           .
               .           .           .
    96         .           .           .       SWSM5
               .           .           .           .
               .           .           .           .
   117         .           .           .           .------->   DIV.5
   114         .           .           .       DSWSM
               .           .           .           .
               .           .           .           .
   120         .           .           .           .       SWSM6
               .           .           .           .           .
               .           .           .           .           .
   141         .           .           .           .           .------->   DIV.6
   138         .           .           .           .       DSWSM
               .           .           .           .           .
               .           .           .           .           .
   144         .           .           .           .           .       SWSM7
               .           .           .           .           .           .
               .           .           .           .           .           .
   164         .           .           .           .           .           .------->   DIV.7
   161         .           .           .           .           .       DSWSM
               .           .           .           .           .           .
               .           .           .           .           .           .
   167         .           .           .           .           .           .       SWSM8
               .           .           .           .           .           .           .
               .           .           .           .           .           .           .
   187         .           .           .           .           .           .           .------->   DIV.8
   184         .           .           .           .           .           .       DSWSM

 (***) RUNOFF ALSO COMPUTED AT THIS LOCATION
1**************************************                  **************************************
*                                    *                  *                                    *
*   FLOOD HYDROGRAPH PACKAGE  (HEC-1)*                  *    U.S. ARMY CORPS OF ENGINEERS    *
*             JUN 09 1992            *                  *    HYDROLOGIC ENGINEERING CENTER   *
*          VERSION 4.0.3E            *                  *         609 SECOND STREET          *
*                                    *                  *       DAVIS, CALIFORNIA 95616      *
* RUN DATE  10/17/01  TIME  11:24:12 *                  *           (916) 551-1748           *
*                                    *                  *                                    *
**************************************                  **************************************

                    LAVEEN ADMS 100-YEAR 24-HOUR SCS TYPE II RAINFALL  CBA FILE#40916-02-30 3
                    SOUTHWEST SOUTH MOUNTAIN WATERSHED (FINAL HEC-1)   SEPTEMBER 30, 1991
                    HEC-1 FILE NAME IS SWSM.NEW24

 5 IO          OUTPUT CONTROL VARIABLES
                    IPRNT          3  PRINT CONTROL
                    IPLOT          0  PLOT CONTROL
                    QSCAL          0.  HYDROGRAPH PLOT SCALE

   IT         HYDROGRAPH TIME DATA
                    NMIN           5  MINUTES IN COMPUTATION INTERVAL
                    IDATE      1   0  STARTING DATE
                    ITIME       0000  STARTING TIME
                      NQ         300  NUMBER OF HYDROGRAPH ORDINATES
                   NDDATE      2   0  ENDING DATE
                   NDTIME       0055  ENDING TIME
                   ICENT          19  CENTURY MARK

                 COMPUTATION INTERVAL    0.08 HOURS
                     TOTAL TIME BASE   24.92 HOURS

              ENGLISH UNITS
                   DRAINAGE AREA         SQUARE MILES
                   PRECIPITATION DEPTH   INCHES
                   LENGTH, ELEVATION     FEET
                   FLOW                  CUBIC FEET PER SECOND
                   STORAGE VOLUME        ACRE-FEET
                   SURFACE AREA          ACRES
                   TEMPERATURE           DEGREES FAHRENHEIT


*** *** *** *** *** *** *** *** *** *** *** *** *** *** *** *** *** *** *** *** *** *** *** *** *** *** *** *** *** *** *** *** *** *** *** ***

                  **************
                  *            *
 6 KK             *    SWSM1   *    -LAND USE- NATURAL DESERT(MOUNTAIN)
                  *            *
                  **************
                            SUB-BASIN SWSM1
                            24-HOUR SCS TYPE II RAINFALL WAS USED TO FINED TC & R FOR THIS BASIN
                            THIS BASIN USED RAINFALL REDUCTION FACTOR OF .99
```

```
                    RAINFALL DEPTH OF 4.20 WAS SPACIALLY REDUCED AS SHOWN BY THE PB RECORD
                    THE FOLLOWING PC RECORD USED A 24-HR SCS TYPE STORM

 11 IN         TIME DATA FOR INPUT TIME SERIES
                  JXMIN        30  TIME INTERVAL IN MINUTES
                  JXDATE    1   0  STARTING DATE
                  JXTIME        0  STARTING TIME

           SUBBASIN RUNOFF DATA

 10 BA         SUBBASIN CHARACTERISTICS
                  TAREA      1.99  SUBBASIN AREA

               PRECIPITATION DATA

 14 PB            STORM      4.16  BASIN TOTAL PRECIPITATION

 14 PI           INCREMENTAL PRECIPITATION PATTERN
                0.00     0.00     0.00     0.00     0.00     0.00     0.00     0.00     0.00     0.00
                0.00     0.00     0.00     0.00     0.00     0.00     0.00     0.00     0.00     0.00
                0.00     0.00     0.00     0.00     0.00     0.00     0.00     0.00     0.00     0.00
                0.00     0.00     0.00     0.00     0.00     0.00     0.00     0.00     0.00     0.00
                0.00     0.00     0.00     0.00     0.00     0.00     0.00     0.00     0.00     0.00
                0.00     0.00     0.00     0.00     0.00     0.00     0.00     0.00     0.00     0.00
                0.00     0.00     0.00     0.00     0.00     0.00     0.00     0.00     0.00     0.00
                0.00     0.00     0.00     0.00     0.00     0.00     0.00     0.00     0.00     0.00
                0.00     0.00     0.00     0.00     0.00     0.00     0.00     0.00     0.00     0.00
                0.00     0.00     0.00     0.00     0.00     0.00     0.00     0.00     0.00     0.00
                0.00     0.00     0.00     0.00     0.00     0.00     0.00     0.00     0.00     0.00
                0.00     0.00     0.00     0.00     0.00     0.00     0.00     0.00     0.00     0.00
                0.00     0.00     0.00     0.00     0.00     0.00     0.01     0.01     0.01     0.01
                0.01     0.01     0.01     0.01     0.01     0.01     0.01     0.01     0.06     0.06
                0.06     0.06     0.06     0.06     0.01     0.01     0.01     0.01     0.01     0.01
                0.01     0.01     0.01     0.01     0.01     0.01     0.00     0.00     0.00     0.00
                0.00     0.00     0.00     0.00     0.00     0.00     0.00     0.00     0.00     0.00
                0.00     0.00     0.00     0.00     0.00     0.00     0.00     0.00     0.00     0.00
                0.00     0.00     0.00     0.00     0.00     0.00     0.00     0.00     0.00     0.00
                0.00     0.00     0.00     0.00     0.00     0.00     0.00     0.00     0.00     0.00
                0.00     0.00     0.00     0.00     0.00     0.00     0.00     0.00     0.00     0.00
                0.00     0.00     0.00     0.00     0.00     0.00     0.00     0.00     0.00     0.00
                0.00     0.00     0.00     0.00     0.00     0.00     0.00     0.00     0.00     0.00
                0.00     0.00     0.00     0.00     0.00     0.00     0.00     0.00     0.00     0.00
                0.00     0.00     0.00     0.00     0.00     0.00     0.00     0.00     0.00     0.00
                0.00     0.00     0.00     0.00     0.00     0.00     0.00     0.00     0.00     0.00
                0.00     0.00     0.00     0.00     0.00     0.00     0.00     0.00     0.00     0.00
                0.00     0.00     0.00     0.00     0.00     0.00     0.00     0.00     0.00     0.00
                0.00     0.00     0.00     0.00     0.00     0.00     0.00     0.00

 20 LG         GREEN AND AMPT LOSS RATE
                  STRTL      0.15  STARTING LOSS
                    DTH      0.34  MOISTURE DEFICIT
                   PSIF      3.55  WETTING FRONT SUCTION
                  XKSAT      0.69  HYDRAULIC CONDUCTIVITY
                  RTIMP     60.00  PERCENT IMPERVIOUS AREA

 21 UC         CLARK UNITGRAPH
                     TC      0.48  TIME OF CONCENTRATION
                      R      0.25  STORAGE COEFFICIENT

 22 UA         ACCUMULATED-AREA VS. TIME,  11 ORDINATES
                  0.0      3.0      5.0      8.0     12.0     20.0     43.0     75.0     90.0     96.0
                100.0

                                              ***

                                    UNIT HYDROGRAPH PARAMETERS
                              CLARK   TC=  0.48 HR,        R=  0.25 HR
                             SNYDER   TP=  0.41 HR,       CP=  0.90

                                          UNIT HYDROGRAPH
                                    20 END-OF-PERIOD ORDINATES
           98.      287.      637.     1825.     2842.     2649.     2028.     1446.     1032.      736.
          525.      374.      267.      190.      136.       97.       69.       49.       35.       25.

 . ***            ***            ***            ***            ***

                    HYDROGRAPH AT STATION    SWSM1

  TOTAL RAINFALL =    4.16, TOTAL LOSS =    1.29, TOTAL EXCESS =    2.86

 PEAK FLOW      TIME                        MAXIMUM AVERAGE FLOW
                                   6-HR       24-HR       72-HR     24.92-HR
+   (CFS)       (HR)
                          (CFS)
+   2683.      12.25               454.        152.        147.        147.
                       (INCHES)   2.123       2.848       2.852       2.852
                        (AC-FT)    225.        302.        303.        303.

                       CUMULATIVE AREA =     1.99 SQ MI


*** *** *** *** *** *** *** *** *** *** *** *** *** *** *** *** *** *** *** *** *** *** *** *** *** *** *** *** *** *** *** *** *** ***
```

```
                 **************
                 *            *
 24 KK           *    RSWSM   *     1
                 *            *
                 **************
                           ROUTE FLOW FROM SUB-BASIN SWSM1 TO COMPUTATION POINT SWSM4

                 HYDROGRAPH ROUTING DATA

 26 RS              STORAGE ROUTING
                       NSTPS           2  NUMBER OF SUBREACHES
                        ITYP        ELEV  TYPE OF INITIAL CONDITION
                      RSVRIC     1168.00  INITIAL CONDITION
                           X        0.00  WORKING R AND D COEFFICIENT

 27 RC              NORMAL DEPTH CHANNEL
                         ANL       0.040  LEFT OVERBANK N-VALUE
                        ANCH       0.050  MAIN CHANNEL N-VALUE
                         ANR       0.040  RIGHT OVERBANK N-VALUE
                       RLNTH       8600.  REACH LENGTH
                         SEL      0.0200  ENERGY SLOPE
                       ELMAX      1174.0  MAX. ELEV. FOR STORAGE/OUTFLOW CALCULATION

                                          CROSS-SECTION DATA
                      --- LEFT OVERBANK --- + ------ MAIN CHANNEL ------- + --- RIGHT OVERBANK ---
 29 RY        ELEVATION  1174.00  1172.00  1170.00  1168.00  1168.00  1170.00  1172.00  1174.00
 28 RX         DISTANCE     0.00    30.00    40.00    50.00    80.00   100.00   110.00   210.00

                                              ***

                                    COMPUTED STORAGE-OUTFLOW-ELEVATION DATA

                STORAGE      0.00      2.02      4.33      6.94      9.84     13.04     16.54     20.31     24.28     28.44
                OUTFLOW      0.00     19.04     62.40    126.88    212.21    318.83    447.47    616.88    820.76   1051.42
              ELEVATION   1168.00   1168.32   1168.63   1168.95   1169.26   1169.58   1169.89   1170.21   1170.53   1170.84

                STORAGE     32.81     37.37     42.13     47.14     53.20     60.53     69.15     79.04     90.21    102.67
                OUTFLOW   1309.59   1595.92   1911.07   2241.47   2605.55   3032.83   3527.57   4097.69   4751.30   5496.25
              ELEVATION   1171.16   1171.47   1171.79   1172.11   1172.42   1172.74   1173.05   1173.37   1173.68   1174.00


      ***            ***            ***            ***            ***

                    HYDROGRAPH AT STATION    RSWSM

 PEAK FLOW      TIME                        MAXIMUM AVERAGE FLOW
                                   6-HR       24-HR       72-HR     24.92-HR
+   (CFS)       (HR)
                          (CFS)
+   2410.      12.42               454.        152.        146.        146.
                       (INCHES)   2.120       2.834       2.834       2.834
                        (AC-FT)    225.        301.        301.        301.

 PEAK STORAGE   TIME                        MAXIMUM AVERAGE STORAGE
                                   6-HR       24-HR       72-HR     24.92-HR
+  (AC-FT)      (HR)
       25.     12.42                 7.          3.          3.          3.

 PEAK STAGE     TIME                        MAXIMUM AVERAGE STAGE
                                   6-HR       24-HR       72-HR     24.92-HR
+   (FEET)      (HR)
   1172.25     12.42            1169.57     1168.79     1168.77     1168.77

                       CUMULATIVE AREA =     1.99 SQ MI


*** *** *** *** *** *** *** *** *** *** *** *** *** *** *** *** *** *** *** *** *** *** *** *** *** *** *** *** *** *** *** *** *** ***


                 **************
                 *            *
 30 KK           *    SWSM4   *
                 *            *
                 **************
                           SUB-BASIN SWSM4-LAND USE- NATURAL DESERT(HILLSLOPE)
                           24-HOUR SCS TYPE II RAINFALL WAS USED TO FINED TC & R FOR THIS BASIN
                           THIS BASIN USED RAINFALL REDUCTION FACTOR OF .99

           SUBBASIN RUNOFF DATA

 34 BA         SUBBASIN CHARACTERISTICS
                  TAREA      0.34  SUBBASIN AREA

               PRECIPITATION DATA

 14 PB            STORM      4.16  BASIN TOTAL PRECIPITATION

 14 PI           INCREMENTAL PRECIPITATION PATTERN
                0.00     0.00     0.00     0.00     0.00     0.00     0.00     0.00     0.00     0.00
                0.00     0.00     0.00     0.00     0.00     0.00     0.00     0.00     0.00     0.00
                0.00     0.00     0.00     0.00     0.00     0.00     0.00     0.00     0.00     0.00
                0.00     0.00     0.00     0.00     0.00     0.00     0.00     0.00     0.00     0.00
```

```
      0.00    0.00    0.00    0.00    0.00    0.00    0.00    0.00    0.00    0.00
      0.00    0.00    0.00    0.00    0.00    0.00    0.00    0.00    0.00    0.00
      0.00    0.00    0.00    0.00    0.00    0.00    0.00    0.00    0.00    0.00
      0.00    0.00    0.00    0.00    0.00    0.00    0.00    0.00    0.00    0.00
      0.00    0.00    0.00    0.00    0.00    0.00    0.00    0.00    0.00    0.00
      0.00    0.00    0.00    0.00    0.00    0.00    0.00    0.00    0.00    0.00
      0.00    0.00    0.00    0.00    0.00    0.00    0.00    0.00    0.00    0.00
      0.00    0.00    0.00    0.00    0.00    0.00    0.01    0.01    0.01    0.01
      0.01    0.01    0.01    0.01    0.01    0.01    0.01    0.01    0.06    0.06
      0.06    0.06    0.06    0.06    0.01    0.01    0.01    0.01    0.01    0.01
      0.01    0.01    0.01    0.01    0.01    0.01    0.00    0.00    0.00    0.00
      0.00    0.00    0.00    0.00    0.00    0.00    0.00    0.00    0.00    0.00
      0.00    0.00    0.00    0.00    0.00    0.00    0.00    0.00    0.00    0.00
      0.00    0.00    0.00    0.00    0.00    0.00    0.00    0.00    0.00    0.00
      0.00    0.00    0.00    0.00    0.00    0.00    0.00    0.00    0.00    0.00
      0.00    0.00    0.00    0.00    0.00    0.00    0.00    0.00    0.00    0.00
      0.00    0.00    0.00    0.00    0.00    0.00    0.00    0.00    0.00    0.00
      0.00    0.00    0.00    0.00    0.00    0.00    0.00    0.00    0.00    0.00
      0.00    0.00    0.00    0.00    0.00    0.00    0.00    0.00    0.00    0.00
      0.00    0.00    0.00    0.00    0.00    0.00    0.00    0.00    0.00    0.00
      0.00    0.00    0.00    0.00    0.00    0.00    0.00    0.00

35 LG   GREEN AND AMPT LOSS RATE
          STRTL        0.15  STARTING LOSS
            DTH        0.35  MOISTURE DEFICIT
           PSIF        3.75  WETTING FRONT SUCTION
          XKSAT        0.29  HYDRAULIC CONDUCTIVITY
          RTIMP        0.00  PERCENT IMPERVIOUS AREA

36 UC   CLARK UNITGRAPH
             TC        0.58  TIME OF CONCENTRATION
              R        0.56  STORAGE COEFFICIENT

37 UA   ACCUMULATED-AREA VS. TIME,  11 ORDINATES
          0.0     3.0     5.0     8.0    12.0    20.0    43.0    75.0    90.0    96.0
        100.0

                                        ***

                                UNIT HYDROGRAPH PARAMETERS
                          CLARK   TC=  0.58 HR,       R=  0.56 HR
                         SNYDER   TP=  0.51 HR,      CP=  0.63

                                UNIT HYDROGRAPH
                            40 END-OF-PERIOD ORDINATES
            7.     20.     36.     84.    188.    266.    271.    245.    211.    182.
          156.    135.    116.    100.     86.     74.     64.     55.     47.     40.
           35.     30.     26.     22.     19.     16.     14.     12.     10.      9.
            8.      7.      6.      5.      4.      4.      3.      3.      2.      2.

    ***             ***             ***             ***             ***

                        HYDROGRAPH AT STATION    SWSM4

     TOTAL RAINFALL =    4.16, TOTAL LOSS =    2.87, TOTAL EXCESS =    1.29

  PEAK FLOW     TIME                          MAXIMUM AVERAGE FLOW
                                      6-HR       24-HR       72-HR     24.92-HR
+   (CFS)       (HR)
                          (CFS)
+     289.     12.33                   47.         12.         11.         11.
                        (INCHES)     1.287       1.287       1.287       1.287
                          (AC-FT)       23.         23.         23.         23.

                        CUMULATIVE AREA =    0.34 SQ MI


*** *** *** *** *** *** *** *** *** *** *** *** *** *** *** *** *** *** *** *** *** *** *** *** *** *** *** *** *** *** *** *** *** *** ***


          **************
          *            *
39 KK     *     CSWSM  *     1
          *            *
          **************
                        COMBINE ROUTED FLOW FROM SUB-BASIN SWSM1 AND SWSM4

41 HC           HYDROGRAPH COMBINATION
                     ICOMP           2  NUMBER OF HYDROGRAPHS TO COMBINE

                                                                 ***
MANE2 NPLAN,NSTM       1      0

    ***             ***             ***             ***             ***

                        HYDROGRAPH AT STATION    CSWSM

  PEAK FLOW     TIME                          MAXIMUM AVERAGE FLOW
                                      6-HR       24-HR       72-HR     24.92-HR
+   (CFS)       (HR)
                          (CFS)
+    2694.     12.42                  501.        163.        157.        157.
                        (INCHES)     1.999       2.608       2.609       2.609
                          (AC-FT)      248.        324.        324.        324.

                        CUMULATIVE AREA =    2.33 SQ MI


*** *** *** *** *** *** *** *** *** *** *** *** *** *** *** *** *** *** *** *** *** *** *** *** *** *** *** *** *** *** *** *** *** *** ***


          **************
          *            *
42 KK     *     DSWSM  *     4
          *            *
          **************
                        RUNOFF FROM COMPUTATION POINT CSWSM1 DRAINS OUTSIDE OF THE STUDY AREA
                        HYDROGRAPH IS DIVERTED

    DT          DIVERSION
                     ISTAD       DIV.4  DIVERSION HYDROGRAPH IDENTIFICATION

    DI             INFLOW        0.00    100.00    500.00   1000.00   2000.00   2500.00   3000.00   3500.00

    DQ       DIVERTED FLOW       0.00    100.00    500.00   1000.00   2000.00   2500.00   3000.00   3500.00

                                                                 ***

     ***             ***             ***             ***             ***

                        DIVERSION HYDROGRAPH     DIV.4

  PEAK FLOW     TIME                          MAXIMUM AVERAGE FLOW
                                      6-HR       24-HR       72-HR     24.92-HR
+   (CFS)       (HR)
                          (CFS)
+    2694.     12.42                  501.        163.        157.        157.
                        (INCHES)     1.999       2.608       2.609       2.609
                          (AC-FT)      248.        324.        324.        324.

                        CUMULATIVE AREA =    2.33 SQ MI

    ***             ***             ***             ***             ***

                        HYDROGRAPH AT STATION    DSWSM

  PEAK FLOW     TIME                          MAXIMUM AVERAGE FLOW
                                      6-HR       24-HR       72-HR     24.92-HR
+   (CFS)       (HR)
                          (CFS)
+       0.     0.00                    0.          0.          0.          0.
                        (INCHES)     0.000       0.000       0.000       0.000
                          (AC-FT)       0.          0.          0.          0.

                        CUMULATIVE AREA =    2.33 SQ MI


*** *** *** *** *** *** *** *** *** *** *** *** *** *** *** *** *** *** *** *** *** *** *** *** *** *** *** *** *** *** *** *** *** *** ***


          **************
          *            *
48 KK     *     SWSM2  *
          *            *
          **************
                        SUB-BASIN SWSM2-LAND USE- NATURAL DESERT(HILLSLOPE,MOUNTAIN)
                        24-HOUR SCS TYPE II RAINFALL WAS USED TO FINED TC & R FOR THIS BASIN
                        THIS BASIN USED RAINFALL REDUCTION FACTOR OF 1.00
                        RAINFALL DEPTH OF 4.20 WAS SPACIALLY REDUCED AS SHOWN BY THE PB RECORD
                        THE FOLLOWING PC RECORD USED A 24-HR SCS TYPE STORM

53 IN       TIME DATA FOR INPUT TIME SERIES
              JXMIN          30  TIME INTERVAL IN MINUTES
             JXDATE     1    0  STARTING DATE
             JXTIME          0  STARTING TIME

          SUBBASIN RUNOFF DATA

52 BA       SUBBASIN CHARACTERISTICS
              TAREA        0.44  SUBBASIN AREA

            PRECIPITATION DATA

56 PB         STORM        4.20  BASIN TOTAL PRECIPITATION

56 PI       INCREMENTAL PRECIPITATION PATTERN
              0.00    0.00    0.00    0.00    0.00    0.00    0.00    0.00    0.00    0.00
              0.00    0.00    0.00    0.00    0.00    0.00    0.00    0.00    0.00    0.00
              0.00    0.00    0.00    0.00    0.00    0.00    0.00    0.00    0.00    0.00
```

0.00	0.00	0.00	0.00	0.00	0.00	0.00	0.00	0.00	0.00
0.00	0.00	0.00	0.00	0.00	0.00	0.00	0.00	0.00	0.00
0.00	0.00	0.00	0.00	0.00	0.00	0.00	0.00	0.00	0.00
0.00	0.00	0.00	0.00	0.00	0.00	0.00	0.00	0.00	0.00
0.00	0.00	0.00	0.00	0.00	0.00	0.00	0.00	0.00	0.00
0.00	0.00	0.00	0.00	0.00	0.00	0.00	0.00	0.00	0.00
0.00	0.00	0.00	0.00	0.00	0.00	0.00	0.00	0.00	0.00
0.00	0.00	0.00	0.00	0.00	0.00	0.00	0.00	0.00	0.00
0.00	0.00	0.00	0.00	0.00	0.00	0.00	0.00	0.00	0.00
0.00	0.00	0.00	0.00	0.00	0.00	0.01	0.01	0.01	0.01
0.01	0.01	0.01	0.01	0.01	0.01	0.01	0.01	0.06	0.06
0.06	0.06	0.06	0.06	0.01	0.01	0.01	0.01	0.01	0.01
0.01	0.01	0.01	0.01	0.01	0.01	0.00	0.00	0.00	0.00
0.00	0.00	0.00	0.00	0.00	0.00	0.00	0.00	0.00	0.00
0.00	0.00	0.00	0.00	0.00	0.00	0.00	0.00	0.00	0.00
0.00	0.00	0.00	0.00	0.00	0.00	0.00	0.00	0.00	0.00
0.00	0.00	0.00	0.00	0.00	0.00	0.00	0.00	0.00	0.00
0.00	0.00	0.00	0.00	0.00	0.00	0.00	0.00	0.00	0.00
0.00	0.00	0.00	0.00	0.00	0.00	0.00	0.00	0.00	0.00
0.00	0.00	0.00	0.00	0.00	0.00	0.00	0.00	0.00	0.00
0.00	0.00	0.00	0.00	0.00	0.00	0.00	0.00	0.00	0.00
0.00	0.00	0.00	0.00	0.00	0.00	0.00	0.00	0.00	0.00
0.00	0.00	0.00	0.00	0.00	0.00	0.00	0.00	0.00	0.00
0.00	0.00	0.00	0.00	0.00	0.00	0.00	0.00	0.00	0.00
0.00	0.00	0.00	0.00	0.00	0.00	0.00	0.00	0.00	0.00
0.00	0.00	0.00	0.00	0.00	0.00	0.00	0.00		

62 LG GREEN AND AMPT LOSS RATE

STRTL	0.15	STARTING LOSS
DTH	0.26	MOISTURE DEFICIT
PSIF	3.10	WETTING FRONT SUCTION
XKSAT	0.94	HYDRAULIC CONDUCTIVITY
RTIMP	25.00	PERCENT IMPERVIOUS AREA

63 UC CLARK UNITGRAPH

TC	0.42	TIME OF CONCENTRATION
R	0.33	STORAGE COEFFICIENT

64 UA ACCUMULATED-AREA VS. TIME, 11 ORDINATES

0.0	3.0	5.0	8.0	12.0	20.0	43.0	75.0	90.0	96.0
100.0									

***

UNIT HYDROGRAPH PARAMETERS

CLARK TC= 0.42 HR, R= 0.33 HR

SNYDER TP= 0.38 HR, CP= 0.77

UNIT HYDROGRAPH

25 END-OF-PERIOD ORDINATES

19.	61.	192.	446.	564.	476.	370.	287.	222.	173.
134.	104.	81.	63.	49.	38.	29.	23.	18.	14.
11.	8.	6.	5.	4.					

*** *** *** *** ***

HYDROGRAPH AT STATION SWSM2

TOTAL RAINFALL = 4.20, TOTAL LOSS = 2.51, TOTAL EXCESS = 1.69

PEAK FLOW	TIME		MAXIMUM AVERAGE FLOW 6-HR	24-HR	72-HR	24.92-HR
+ (CFS)	(HR)					
		(CFS)				
+ 421.	12.25		65.	20.	19.	19.
		(INCHES)	1.373	1.678	1.680	1.680
		(AC-FT)	32.	39.	39.	39.

CUMULATIVE AREA = 0.44 SQ MI

*** ***

```
              **************
              *            *
66 KK         *   DSWSM    *     2
              *            *
              **************
```

RUNOFF FROM SUB-BASIN SWSM2 DRAINS OUTSIDE OF THE STUDY AREA.
HYDROGRAPH IS DIVERTED

DT DIVERSION

ISTAD DIV.2 DIVERSION HYDROGRAPH IDENTIFICATION

DI	INFLOW	0.00	100.00	200.00	500.00	1000.00	1500.00	2000.00	2500.00
DQ	DIVERTED FLOW	0.00	100.00	200.00	500.00	1000.00	1500.00	2000.00	2500.00

***

*** *** *** *** ***

DIVERSION HYDROGRAPH DIV.2

PEAK FLOW	TIME		MAXIMUM AVERAGE FLOW 6-HR	24-HR	72-HR	24.92-HR
+ (CFS)	(HR)					
		(CFS)				
+ 421.	12.25		65.	20.	19.	19.
		(INCHES)	1.373	1.678	1.680	1.680
		(AC-FT)	32.	39.	39.	39.

CUMULATIVE AREA = 0.44 SQ MI

*** *** *** *** ***

HYDROGRAPH AT STATION DSWSM

PEAK FLOW	TIME		MAXIMUM AVERAGE FLOW 6-HR	24-HR	72-HR	24.92-HR
+ (CFS)	(HR)					
		(CFS)				
+ 0.	0.00		0.	0.	0.	0.
		(INCHES)	0.000	0.000	0.000	0.000
		(AC-FT)	0.	0.	0.	0.

CUMULATIVE AREA = 0.44 SQ MI

*** ***

```
              **************
              *            *
72 KK         *   SWSM3    *
              *            *
              **************
```

SUB-BASIN SWSM3-LAND USE- NATURAL DESERT(HILLSLOPE)
24-HOUR SCS TYPE II RAINFALL WAS USED TO FINED TC & R FOR THIS BASIN
THIS BASIN USED RAINFALL REDUCTION FACTOR OF1.00
RAINFALL DEPTH OF 4.20 WAS SPACIALLY REDUCED AS SHOWN BY THE PB RECORD
THE FOLLOWING PC RECORD USED A 24-HR SCS TYPE STORM

77 IN TIME DATA FOR INPUT TIME SERIES

JXMIN		30	TIME INTERVAL IN MINUTES
JXDATE	1	0	STARTING DATE
JXTIME		0	STARTING TIME

SUBBASIN RUNOFF DATA

76 BA SUBBASIN CHARACTERISTICS

TAREA 0.28 SUBBASIN AREA

PRECIPITATION DATA

80 PB STORM 4.20 BASIN TOTAL PRECIPITATION

80 PI INCREMENTAL PRECIPITATION PATTERN

0.00	0.00	0.00	0.00	0.00	0.00	0.00	0.00	0.00	0.00
0.00	0.00	0.00	0.00	0.00	0.00	0.00	0.00	0.00	0.00
0.00	0.00	0.00	0.00	0.00	0.00	0.00	0.00	0.00	0.00
0.00	0.00	0.00	0.00	0.00	0.00	0.00	0.00	0.00	0.00
0.00	0.00	0.00	0.00	0.00	0.00	0.00	0.00	0.00	0.00
0.00	0.00	0.00	0.00	0.00	0.00	0.00	0.00	0.00	0.00
0.00	0.00	0.00	0.00	0.00	0.00	0.00	0.00	0.00	0.00
0.00	0.00	0.00	0.00	0.00	0.00	0.00	0.00	0.00	0.00
0.00	0.00	0.00	0.00	0.00	0.00	0.00	0.00	0.00	0.00
0.00	0.00	0.00	0.00	0.00	0.00	0.00	0.00	0.00	0.00
0.00	0.00	0.00	0.00	0.00	0.00	0.00	0.00	0.00	0.00
0.00	0.00	0.00	0.00	0.00	0.00	0.00	0.00	0.00	0.00
0.00	0.00	0.00	0.00	0.00	0.00	0.01	0.01	0.01	0.01
0.01	0.01	0.01	0.01	0.01	0.01	0.01	0.01	0.06	0.06
0.06	0.06	0.06	0.06	0.01	0.01	0.01	0.01	0.01	0.01
0.01	0.01	0.01	0.01	0.01	0.01	0.00	0.00	0.00	0.00
0.00	0.00	0.00	0.00	0.00	0.00	0.00	0.00	0.00	0.00
0.00	0.00	0.00	0.00	0.00	0.00	0.00	0.00	0.00	0.00
0.00	0.00	0.00	0.00	0.00	0.00	0.00	0.00	0.00	0.00
0.00	0.00	0.00	0.00	0.00	0.00	0.00	0.00	0.00	0.00
0.00	0.00	0.00	0.00	0.00	0.00	0.00	0.00	0.00	0.00
0.00	0.00	0.00	0.00	0.00	0.00	0.00	0.00	0.00	0.00
0.00	0.00	0.00	0.00	0.00	0.00	0.00	0.00	0.00	0.00
0.00	0.00	0.00	0.00	0.00	0.00	0.00	0.00	0.00	0.00
0.00	0.00	0.00	0.00	0.00	0.00	0.00	0.00	0.00	0.00
0.00	0.00	0.00	0.00	0.00	0.00	0.00	0.00	0.00	0.00
0.00	0.00	0.00	0.00	0.00	0.00	0.00	0.00	0.00	0.00
0.00	0.00	0.00	0.00	0.00	0.00	0.00	0.00	0.00	0.00
0.00	0.00	0.00	0.00	0.00	0.00	0.00	0.00		

86 LG GREEN AND AMPT LOSS RATE

STRTL	0.15	STARTING LOSS
DTH	0.30	MOISTURE DEFICIT
PSIF	3.75	WETTING FRONT SUCTION
XKSAT	0.63	HYDRAULIC CONDUCTIVITY
RTIMP	0.00	PERCENT IMPERVIOUS AREA

87 UC CLARK UNITGRAPH
TC 0.62 TIME OF CONCENTRATION
R 0.53 STORAGE COEFFICIENT

88 UA ACCUMULATED-AREA VS. TIME, 11 ORDINATES

0.0	3.0	5.0	8.0	12.0	20.0	43.0	75.0	90.0	96.0
100.0									

***

UNIT HYDROGRAPH PARAMETERS
CLARK TC= 0.62 HR, R= 0.53 HR
SNYDER TP= 0.54 HR, CP= 0.69

UNIT HYDROGRAPH
39 END-OF-PERIOD ORDINATES

6.	16.	27.	58.	136.	212.	230.	211.	184.	157.
135.	115.	98.	84.	72.	62.	53.	45.	39.	33.
28.	24.	21.	18.	15.	13.	11.	9.	8.	7.
6.	5.	4.	4.	3.	3.	2.	2.	2.	

*** *** *** *** ***

HYDROGRAPH AT STATION SWSM3

TOTAL RAINFALL = 4.20, TOTAL LOSS = 3.19, TOTAL EXCESS = 1.01

PEAK FLOW	TIME		MAXIMUM AVERAGE FLOW			
			6-HR	24-HR	72-HR	24.92-HR
+ (CFS)	(HR)					
		(CFS)				
+ 191.	12.42		30.	8.	7.	7.
		(INCHES)	1.005	1.005	1.005	1.005
		(AC-FT)	15.	15.	15.	15.

CUMULATIVE AREA = 0.28 SQ MI

*** ***

****
* *
90 KK * DSWSM * 3
* *
****

RUNOFF FROM SUB-BASIN SWSM3 DRAINS OUTSIDE OF THE STUDY AREA.
HYDROGRAPH IS DIVERTED

DT DIVERSION
ISTAD DIV.3 DIVERSION HYDROGRAPH IDENTIFICATION

DI INFLOW	0.00	50.00	200.00	300.00	400.00	500.00	700.00	1000.00
DQ DIVERTED FLOW	0.00	50.00	200.00	300.00	400.00	500.00	700.00	1000.00

***

*** *** *** *** ***

DIVERSION HYDROGRAPH DIV.3

PEAK FLOW	TIME		MAXIMUM AVERAGE FLOW			
			6-HR	24-HR	72-HR	24.92-HR
+ (CFS)	(HR)					
		(CFS)				
+ 191.	12.42		30.	8.	7.	7.
		(INCHES)	1.005	1.005	1.005	1.005
		(AC-FT)	15.	15.	15.	15.

CUMULATIVE AREA = 0.28 SQ MI

*** *** *** *** ***

HYDROGRAPH AT STATION DSWSM

PEAK FLOW	TIME		MAXIMUM AVERAGE FLOW			
			6-HR	24-HR	72-HR	24.92-HR
+ (CFS)	(HR)					
		(CFS)				
+ 0.	0.00		0.	0.	0.	0.
		(INCHES)	0.000	0.000	0.000	0.000
		(AC-FT)	0.	0.	0.	0.

CUMULATIVE AREA = 0.28 SQ MI

*** ***

****
* *
96 KK * SWSM5 *
* *
****

SUB-BASIN SWSM5-LAND USE- NATURAL DESERT(HILLSLOPE)
24-HOUR SCS TYPE II RAINFALL WAS USED TO FINED TC & R FOR THIS BASIN
THIS BASIN USED RAINFALL REDUCTION FACTOR OF1.00
RAINFALL DEPTH OF 4.20 WAS SPACIALLY REDUCED AS SHOWN BY THE PB RECORD
THE FOLLOWING PC RECORD USED A 24-HR SCS TYPE STORM

101 IN TIME DATA FOR INPUT TIME SERIES
JXMIN 30 TIME INTERVAL IN MINUTES
JXDATE 1 0 STARTING DATE
JXTIME 0 STARTING TIME

SUBBASIN RUNOFF DATA

100 BA SUBBASIN CHARACTERISTICS
TAREA 0.09 SUBBASIN AREA

PRECIPITATION DATA

104 PB STORM 4.20 BASIN TOTAL PRECIPITATION

104 PI INCREMENTAL PRECIPITATION PATTERN

0.00	0.00	0.00	0.00	0.00	0.00	0.00	0.00	0.00	0.00
0.00	0.00	0.00	0.00	0.00	0.00	0.00	0.00	0.00	0.00
0.00	0.00	0.00	0.00	0.00	0.00	0.00	0.00	0.00	0.00
0.00	0.00	0.00	0.00	0.00	0.00	0.00	0.00	0.00	0.00
0.00	0.00	0.00	0.00	0.00	0.00	0.00	0.00	0.00	0.00
0.00	0.00	0.00	0.00	0.00	0.00	0.00	0.00	0.00	0.00
0.00	0.00	0.00	0.00	0.00	0.00	0.00	0.00	0.00	0.00
0.00	0.00	0.00	0.00	0.00	0.00	0.00	0.00	0.00	0.00
0.00	0.00	0.00	0.00	0.00	0.00	0.00	0.00	0.00	0.00
0.00	0.00	0.00	0.00	0.00	0.00	0.00	0.00	0.00	0.00
0.00	0.00	0.00	0.00	0.00	0.00	0.00	0.00	0.00	0.00
0.00	0.00	0.00	0.00	0.00	0.00	0.00	0.00	0.00	0.00
0.00	0.00	0.00	0.00	0.00	0.00	0.01	0.01	0.01	0.01
0.01	0.01	0.01	0.01	0.01	0.01	0.01	0.01	0.06	0.06
0.06	0.06	0.06	0.06	0.01	0.01	0.01	0.01	0.01	0.01
0.01	0.01	0.01	0.01	0.01	0.01	0.00	0.00	0.00	0.00
0.00	0.00	0.00	0.00	0.00	0.00	0.00	0.00	0.00	0.00
0.00	0.00	0.00	0.00	0.00	0.00	0.00	0.00	0.00	0.00
0.00	0.00	0.00	0.00	0.00	0.00	0.00	0.00	0.00	0.00
0.00	0.00	0.00	0.00	0.00	0.00	0.00	0.00	0.00	0.00
0.00	0.00	0.00	0.00	0.00	0.00	0.00	0.00	0.00	0.00
0.00	0.00	0.00	0.00	0.00	0.00	0.00	0.00	0.00	0.00
0.00	0.00	0.00	0.00	0.00	0.00	0.00	0.00	0.00	0.00
0.00	0.00	0.00	0.00	0.00	0.00	0.00	0.00	0.00	0.00
0.00	0.00	0.00	0.00	0.00	0.00	0.00	0.00	0.00	0.00
0.00	0.00	0.00	0.00	0.00	0.00	0.00	0.00	0.00	0.00
0.00	0.00	0.00	0.00	0.00	0.00	0.00	0.00	0.00	0.00
0.00	0.00	0.00	0.00	0.00	0.00	0.00	0.00	0.00	0.00
0.00	0.00	0.00	0.00	0.00	0.00	0.00	0.00		

110 LG GREEN AND AMPT LOSS RATE
STRTL 0.15 STARTING LOSS
DTH 0.25 MOISTURE DEFICIT
PSIF 8.60 WETTING FRONT SUCTION
XKSAT 0.07 HYDRAULIC CONDUCTIVITY
RTIMP 0.00 PERCENT IMPERVIOUS AREA

111 UC CLARK UNITGRAPH
TC 0.43 TIME OF CONCENTRATION
R 0.52 STORAGE COEFFICIENT

112 UA ACCUMULATED-AREA VS. TIME, 11 ORDINATES

0.0	3.0	5.0	8.0	12.0	20.0	43.0	75.0	90.0	96.0
100.0									

***

UNIT HYDROGRAPH PARAMETERS
CLARK TC= 0.43 HR, R= 0.52 HR
SNYDER TP= 0.41 HR, CP= 0.57

UNIT HYDROGRAPH
36 END-OF-PERIOD ORDINATES

3.	8.	24.	59.	82.	77.	66.	56.	48.	41.
35.	30.	25.	21.	18.	15.	13.	11.	10.	8.
7.	6.	5.	4.	4.	3.	3.	2.	2.	2.
1.	1.	1.	1.	1.	1.				

*** *** *** *** ***

HYDROGRAPH AT STATION SWSM5

TOTAL RAINFALL = 4.20, TOTAL LOSS = 2.32, TOTAL EXCESS = 1.88

PEAK FLOW	TIME		MAXIMUM AVERAGE FLOW			
			6-HR	24-HR	72-HR	24.92-HR
+ (CFS)	(HR)					
		(CFS)				

```
+    100.     12.25               18.          5.          4.          4.
                      (INCHES)   1.872       1.873       1.873       1.873
                      (AC-FT)       9.          9.          9.          9.

                      CUMULATIVE AREA =     0.09 SQ MI
```

*** ***

```
              *************
              *           *
  114 KK      *   DSWSM   *     5
              *           *
              *************
                          RUNOFF FROM SUB-BASIN SWSM5 DRAINS OUTSIDE OF THE STUTY AREA.
                          HYDROGRAPH IS DIVERTED

     DT          DIVERSION
                     ISTAD        DIV.5  DIVERSION HYDROGRAPH IDENTIFICATION

     DI                INFLOW       0.00     10.00     50.00     70.00    100.00    150.00    200.00    300.00

     DQ        DIVERTED FLOW        0.00     10.00     50.00     70.00    100.00    150.00    200.00    300.00
                                                                ***

     ***          ***           ***          ***           ***

                          DIVERSION HYDROGRAPH    DIV.5

 PEAK FLOW      TIME                              MAXIMUM AVERAGE FLOW
                                        6-HR        24-HR        72-HR      24.92-HR
+   (CFS)       (HR)
                          (CFS)
+    100.     12.25               18.          5.          4.          4.
                      (INCHES)   1.872       1.873       1.873       1.873
                      (AC-FT)       9.          9.          9.          9.

                      CUMULATIVE AREA =     0.09 SQ MI

     ***          ***           ***          ***           ***

                          HYDROGRAPH AT STATION     DSWSM

 PEAK FLOW      TIME                              MAXIMUM AVERAGE FLOW
                                        6-HR        24-HR        72-HR      24.92-HR
+   (CFS)       (HR)
                          (CFS)
+      0.      0.00                0.          0.          0.          0.
                      (INCHES)   0.000       0.000       0.000       0.000
                      (AC-FT)       0.    -     0.          0.          0.

                      CUMULATIVE AREA =     0.09 SQ MI
```

*** ***

```
              *************
              *           *
  120 KK      *   SWSM6   *
              *           *
              *************
                          SUB-BASIN SWSM6-LAND USE- NATURAL DESERT(HILLSLOPE,MOUNTAINS)
                          24-HOUR SCS TYPE II RAINFALL WAS USED TO FINED TC & R FOR THIS BASIN
                          THIS BASIN USED RAINFALL REDUCTION FACTOR OF 1.00
                          RAINFALL DEPTH OF 4.20 WAS SPACIALLY REDUCED AS SHOWN BY THE PB RECORD
                          THE FOLLOWING PC RECORD USED A 24-HR SCS TYPE STORM

  125 IN         TIME DATA FOR INPUT TIME SERIES
                      JXMIN         30   TIME INTERVAL IN MINUTES
                      JXDATE    1    0   STARTING DATE
                      JXTIME         0   STARTING TIME

             SUBBASIN RUNOFF DATA

  124 BA         SUBBASIN CHARACTERISTICS
                     TAREA        0.95   SUBBASIN AREA

                 PRECIPITATION DATA

  128 PB             STORM        4.20   BASIN TOTAL PRECIPITATION

  128 PI           INCREMENTAL PRECIPITATION PATTERN
                   0.00      0.00      0.00      0.00      0.00      0.00      0.00      0.00      0.00      0.00
                   0.00      0.00      0.00      0.00      0.00      0.00      0.00      0.00      0.00      0.00
                   0.00      0.00      0.00      0.00      0.00      0.00      0.00      0.00      0.00      0.00
                   0.00      0.00      0.00      0.00      0.00      0.00      0.00      0.00      0.00      0.00
                   0.00      0.00      0.00      0.00      0.00      0.00      0.00      0.00      0.00      0.00
                   0.00      0.00      0.00      0.00      0.00      0.00      0.00      0.00      0.00      0.00
                   0.00      0.00      0.00      0.00      0.00      0.00      0.00      0.00      0.00      0.00
                   0.00      0.00      0.00      0.00      0.00      0.00      0.00      0.00      0.00      0.00
                   0.00      0.00      0.00      0.00      0.00      0.00      0.00      0.00      0.00      0.00
                   0.00      0.00      0.00      0.00      0.00      0.00      0.00      0.00      0.00      0.00
                   0.00      0.00      0.00      0.00      0.00      0.00      0.00      0.00      0.00      0.00
                   0.00      0.00      0.00      0.00      0.00      0.00      0.00      0.00      0.00      0.00
                   0.00      0.00      0.00      0.00      0.00      0.00      0.01      0.01      0.01      0.01
                   0.01      0.01      0.01      0.01      0.01      0.01      0.01      0.01      0.06      0.06
                   0.06      0.06      0.06      0.06      0.01      0.01      0.01      0.01      0.01      0.01
                   0.01      0.01      0.01      0.01      0.01      0.01      0.00      0.00      0.00      0.00
                   0.00      0.00      0.00      0.00      0.00      0.00      0.00      0.00      0.00      0.00
                   0.00      0.00      0.00      0.00      0.00      0.00      0.00      0.00      0.00      0.00
                   0.00      0.00      0.00      0.00      0.00      0.00      0.00      0.00      0.00      0.00
                   0.00      0.00      0.00      0.00      0.00      0.00      0.00      0.00      0.00      0.00
                   0.00      0.00      0.00      0.00      0.00      0.00      0.00      0.00      0.00      0.00
                   0.00      0.00      0.00      0.00      0.00      0.00      0.00      0.00      0.00      0.00
                   0.00      0.00      0.00      0.00      0.00      0.00      0.00      0.00      0.00      0.00
                   0.00      0.00      0.00      0.00      0.00      0.00      0.00      0.00      0.00      0.00
                   0.00      0.00      0.00      0.00      0.00      0.00      0.00      0.00      0.00      0.00
                   0.00      0.00      0.00      0.00      0.00      0.00      0.00      0.00      0.00      0.00
                   0.00      0.00      0.00      0.00      0.00      0.00      0.00      0.00      0.00      0.00
                   0.00      0.00      0.00      0.00      0.00      0.00      0.00      0.00      0.00      0.00
                   0.00      0.00      0.00      0.00      0.00      0.00      0.00      0.00

  134 LG           GREEN AND AMPT LOSS RATE
                      STRTL       0.15   STARTING LOSS
                        DTH       0.32   MOISTURE DEFICIT
                       PSIF       4.95   WETTING FRONT SUCTION
                      XKSAT       0.56   HYDRAULIC CONDUCTIVITY
                      RTIMP      40.00   PERCENT IMPERVIOUS AREA

  135 UC           CLARK UNITGRAPH
                         TC       0.47   TIME OF CONCENTRATION
                          R       0.36   STORAGE COEFFICIENT

  136 UA           ACCUMULATED-AREA VS. TIME,  11 ORDINATES
                      0.0       3.0       5.0       8.0      12.0      20.0      43.0      75.0      90.0      96.0
                    100.0

                                                  ***

                                        UNIT HYDROGRAPH PARAMETERS
                                   CLARK   TC=  0.47 HR,        R=  0.36 HR
                                  SNYDER   TP=  0.41 HR,       CP=  0.73

                                             UNIT HYDROGRAPH
                                        27 END-OF-PERIOD ORDINATES
            35.      107.      266.      724.     1091.     1039.      856.      677.      536.      424.
           335.      265.      210.      166.      131.      104.       82.       65.       51.       41.
            32.       25.       20.       16.       13.       10.        8.

     ***          ***           ***          ***           ***

                          HYDROGRAPH AT STATION     SWSM6

   TOTAL RAINFALL =      4.20, TOTAL LOSS =      1.93, TOTAL EXCESS =      2.27

 PEAK FLOW      TIME                              MAXIMUM AVERAGE FLOW
                                        6-HR        24-HR        72-HR      24.92-HR
+   (CFS)       (HR)
                          (CFS)
+   1044.     12.25              181.         58.         56.         56.
                      (INCHES)   1.768       2.256       2.260       2.260
                      (AC-FT)      90.        114.        115.        115.

                      CUMULATIVE AREA =     0.95 SQ MI
```

*** ***

```
              *************
              *           *
  138 KK      *   DSWSM   *     6
              *           *
              *************
                          RUNOFF FROM SUB-BASIN SWSM6 DRAINS OUTSIDE OF THE STUDY AREA.
                          HYDROGRAPH IS DIVERTED

     DT          DIVERSION
                     ISTAD        DIV.6  DIVERSION HYDROGRAPH IDENTIFICATION

     DI                INFLOW       0.00    100.00    500.00   1000.00   1500.00   2000.00   2500.00   3000.00

     DQ        DIVERTED FLOW        0.00    100.00    500.00   1000.00   1500.00   2000.00   2500.00   3000.00
                                                                ***

     ***          ***           ***          ***           ***

                          DIVERSION HYDROGRAPH    DIV.6
```

```
 PEAK FLOW      TIME                          MAXIMUM AVERAGE FLOW
                                      6-HR       24-HR       72-HR     24.92-HR
+   (CFS)       (HR)
                            (CFS)
+   1044.      12.25                  181.         58.         56.         56.
                          (INCHES)   1.768       2.256       2.260       2.260
                           (AC-FT)     90.        114.        115.        115.

                           CUMULATIVE AREA =    0.95 SQ MI
```

```
      ***           ***           ***           ***           ***

                        HYDROGRAPH AT STATION    DSWSM

 PEAK FLOW      TIME                          MAXIMUM AVERAGE FLOW
                                      6-HR       24-HR       72-HR     24.92-HR
+   (CFS)       (HR)
                            (CFS)
+      0.       0.00                    0.          0.          0.          0.
                          (INCHES)   0.000       0.000       0.000       0.000
                           (AC-FT)      0.          0.          0.          0.

                           CUMULATIVE AREA =    0.95 SQ MI
```

```
*** *** *** *** *** *** *** *** *** *** *** *** *** *** *** *** *** *** *** *** *** *** *** *** *** *** *** *** *** *** *** *** ***

                 **************
                 *            *
 144 KK          *    SWSM7   *
                 *            *
                 **************

                       SUB-BASIN SWSM7-LAND USE- NATURAL DESERT(HILLSLOPE,MOUNTAIN)
                       24-HOUR SCS TYPE II RAINFALL WAS USED TO FINED TC & R FOR THIS BASIN
                       THIS BASIN USED RAINFALL REDUCTION FACTOR OF1.00
                       RAINFALL DEPTH OF 4.20 WAS SPACIALLY REDUCED AS SHOWN BY THE PB RECORD
                       THE FOLLOWING PC RECORD USED A 24-HR SCS TYPE STORM

 149 IN          TIME DATA FOR INPUT TIME SERIES
                      JXMIN          30  TIME INTERVAL IN MINUTES
                     JXDATE      1    0  STARTING DATE
                     JXTIME           0  STARTING TIME

               SUBBASIN RUNOFF DATA

 148 BA          SUBBASIN CHARACTERISTICS
                      TAREA        0.10  SUBBASIN AREA

                 PRECIPITATION DATA

 152 PB               STORM        4.20  BASIN TOTAL PRECIPITATION

 152 PI            INCREMENTAL PRECIPITATION PATTERN
                     0.00      0.00      0.00      0.00      0.00      0.00      0.00      0.00      0.00      0.00
                     0.00      0.00      0.00      0.00      0.00      0.00      0.00      0.00      0.00      0.00
                     0.00      0.00      0.00      0.00      0.00      0.00      0.00      0.00      0.00      0.00
                     0.00      0.00      0.00      0.00      0.00      0.00      0.00      0.00      0.00      0.00
                     0.00      0.00      0.00      0.00      0.00      0.00      0.00      0.00      0.00      0.00
                     0.00      0.00      0.00      0.00      0.00      0.00      0.00      0.00      0.00      0.00
                     0.00      0.00      0.00      0.00      0.00      0.00      0.00      0.00      0.00      0.00
                     0.00      0.00      0.00      0.00      0.00      0.00      0.00      0.00      0.00      0.00
                     0.00      0.00      0.00      0.00      0.00      0.00      0.00      0.00      0.00      0.00
                     0.00      0.00      0.00      0.00      0.00      0.00      0.00      0.00      0.00      0.00
                     0.00      0.00      0.00      0.00      0.00      0.00      0.00      0.00      0.00      0.00
                     0.00      0.00      0.00      0.00      0.00      0.00      0.00      0.00      0.00      0.00
                     0.00      0.00      0.00      0.00      0.00      0.00      0.01      0.01      0.01      0.01
                     0.01      0.01      0.01      0.01      0.01      0.01      0.01      0.01      0.06      0.06
                     0.06      0.06      0.06      0.06      0.01      0.01      0.01      0.01      0.01      0.01
                     0.01      0.01      0.01      0.01      0.01      0.01      0.00      0.00      0.00      0.00
                     0.00      0.00      0.00      0.00      0.00      0.00      0.00      0.00      0.00      0.00
                     0.00      0.00      0.00      0.00      0.00      0.00      0.00      0.00      0.00      0.00
                     0.00      0.00      0.00      0.00      0.00      0.00      0.00      0.00      0.00      0.00
                     0.00      0.00      0.00      0.00      0.00      0.00      0.00      0.00      0.00      0.00
                     0.00      0.00      0.00      0.00      0.00      0.00      0.00      0.00      0.00      0.00
                     0.00      0.00      0.00      0.00      0.00      0.00      0.00      0.00      0.00      0.00
                     0.00      0.00      0.00      0.00      0.00      0.00      0.00      0.00      0.00      0.00
                     0.00      0.00      0.00      0.00      0.00      0.00      0.00      0.00      0.00      0.00
                     0.00      0.00      0.00      0.00      0.00      0.00      0.00      0.00      0.00      0.00
                     0.00      0.00      0.00      0.00      0.00      0.00      0.00      0.00      0.00      0.00
                     0.00      0.00      0.00      0.00      0.00      0.00      0.00      0.00      0.00      0.00
                     0.00      0.00      0.00      0.00      0.00      0.00      0.00      0.00      0.00      0.00
                     0.00      0.00      0.00      0.00      0.00      0.00      0.00      0.00

 134 LG          GREEN AND AMPT LOSS RATE
                      STRTL        0.15  STARTING LOSS
                        DTH        0.32  MOISTURE DEFICIT
                       PSIF        4.95  WETTING FRONT SUCTION
                      XKSAT        0.56  HYDRAULIC CONDUCTIVITY
                      RTIMP       40.00  PERCENT IMPERVIOUS AREA

 158 UC          CLARK UNITGRAPH
                         TC        0.18  TIME OF CONCENTRATION
                          R        0.14  STORAGE COEFFICIENT

 159 UA          ACCUMULATED-AREA VS. TIME,  11 ORDINATES
                       0.0       3.0       5.0       8.0      12.0      20.0      43.0      75.0      90.0      96.0
                     100.0

                                                ***

                                           UNIT HYDROGRAPH PARAMETERS
                                      CLARK   TC=  0.18 HR,        R=  0.14 HR
                                     SNYDER   TP=  0.18 HR,       CP=  0.74

                                                  UNIT HYDROGRAPH
                                           11 END-OF-PERIOD ORDINATES
          29.       186.       249.       142.        77.        42.        23.        12.         7.         4.
           2.
```

```
      ***           ***           ***           ***           ***

                        HYDROGRAPH AT STATION    SWSM7

   TOTAL RAINFALL =    4.20, TOTAL LOSS =     1.93, TOTAL EXCESS =     2.27

 PEAK FLOW      TIME                          MAXIMUM AVERAGE FLOW
                                      6-HR       24-HR       72-HR     24.92-HR
+   (CFS)       (HR)
                            (CFS)
+    150.      12.08                   19.          6.          6.          6.
                          (INCHES)   1.772       2.261       2.263       2.263
                           (AC-FT)      9.         12.         12.         12.

                           CUMULATIVE AREA =    0.10 SQ MI
```

```
*** *** *** *** *** *** *** *** *** *** *** *** *** *** *** *** *** *** *** *** *** *** *** *** *** *** *** *** *** *** *** *** ***

                 **************
                 *            *
 161 KK          *    DSWSM   *     7
                 *            *
                 **************
                       RUNOFF FROM SUB-BASIN SWSM7 DRAINS OUTSIDE OF STUDY AREA.
                       HYDROGRAPH IS DIVERTED

   DT            DIVERSION
                      ISTAD       DIV.7   DIVERSION HYDROGRAPH IDENTIFICATION

   DI                INFLOW        0.00     50.00    100.00    200.00    500.00    700.00    800.00   1000.00

   DQ         DIVERTED FLOW        0.00     50.00    100.00    200.00    500.00    700.00    800.00   1000.00
                                                ***
```

```
      ***           ***           ***           ***           ***

                        DIVERSION HYDROGRAPH    DIV.7

 PEAK FLOW      TIME                          MAXIMUM AVERAGE FLOW
                                      6-HR       24-HR       72-HR     24.92-HR
+   (CFS)       (HR)
                            (CFS)
+    150.      12.08                   19.          6.          6.          6.
                          (INCHES)   1.772       2.261       2.263       2.263
                           (AC-FT)      9.         12.         12.         12.

                           CUMULATIVE AREA =    0.10 SQ MI
```

```
      ***           ***           ***           ***           ***

                        HYDROGRAPH AT STATION    DSWSM

 PEAK FLOW      TIME                          MAXIMUM AVERAGE FLOW
                                      6-HR       24-HR       72-HR     24.92-HR
+   (CFS)       (HR)
                            (CFS)
+      0.       0.00                    0.          0.          0.          0.
                          (INCHES)   0.000       0.000       0.000       0.000
                           (AC-FT)      0.          0.          0.          0.

                           CUMULATIVE AREA =    0.10 SQ MI
```

```
*** *** *** *** *** *** *** *** *** *** *** *** *** *** *** *** *** *** *** *** *** *** *** *** *** *** *** *** *** *** *** *** ***

                 **************
                 *            *
 167 KK          *    SWSM8   *
```

```
     *           *
     *************
               SUB-BASIN SWSM8-LAND USE- NATURAL DESERT(MOUNTAIN)
               24-HOUR SCS TYPE II RAINFALL WAS USED TO FINED TC & R FOR THIS BASIN
               THIS BASIN USED RAINFALL REDUCTION FACTOR OF1.00
               RAINFALL DEPTH OF 4.20 WAS SPACIALLY REDUCED AS SHOWN BY THE PB RECORD
               THE FOLLOWING PC RECORD USED A 24-HR SCS TYPE STORM

172 IN        TIME DATA FOR INPUT TIME SERIES
                 JXMIN          30  TIME INTERVAL IN MINUTES
                JXDATE       1   0  STARTING DATE
                JXTIME           0  STARTING TIME

           SUBBASIN RUNOFF DATA

171 BA        SUBBASIN CHARACTERISTICS
                 TAREA        0.03  SUBBASIN AREA

              PRECIPITATION DATA

175 PB           STORM        4.20  BASIN TOTAL PRECIPITATION

175 PI          INCREMENTAL PRECIPITATION PATTERN
                  0.00      0.00      0.00      0.00      0.00      0.00      0.00      0.00      0.00      0.00
                  0.00      0.00      0.00      0.00      0.00      0.00      0.00      0.00      0.00      0.00
                  0.00      0.00      0.00      0.00      0.00      0.00      0.00      0.00      0.00      0.00
                  0.00      0.00      0.00      0.00      0.00      0.00      0.00      0.00      0.00      0.00
                  0.00      0.00      0.00      0.00      0.00      0.00      0.00      0.00      0.00      0.00
                  0.00      0.00      0.00      0.00      0.00      0.00      0.00      0.00      0.00      0.00
                  0.00      0.00      0.00      0.00      0.00      0.00      0.00      0.00      0.00      0.00
                  0.00      0.00      0.00      0.00      0.00      0.00      0.00      0.00      0.00      0.00
                  0.00      0.00      0.00      0.00      0.00      0.00      0.00      0.00      0.00      0.00
                  0.00      0.00      0.00      0.00      0.00      0.00      0.00      0.00      0.00      0.00
                  0.00      0.00      0.00      0.00      0.00      0.00      0.00      0.00      0.00      0.00
                  0.00      0.00      0.00      0.00      0.00      0.00      0.00      0.00      0.00      0.00
                  0.00      0.00      0.00      0.00      0.00      0.00      0.01      0.01      0.01      0.01
                  0.01      0.01      0.01      0.01      0.01      0.01      0.01      0.01      0.06      0.06
                  0.06      0.06      0.06      0.06      0.01      0.01      0.01      0.01      0.01      0.01
                  0.01      0.01      0.01      0.01      0.01      0.01      0.00      0.00      0.00      0.00
                  0.00      0.00      0.00      0.00      0.00      0.00      0.00      0.00      0.00      0.00
                  0.00      0.00      0.00      0.00      0.00      0.00      0.00      0.00      0.00      0.00
                  0.00      0.00      0.00      0.00      0.00      0.00      0.00      0.00      0.00      0.00
                  0.00      0.00      0.00      0.00      0.00      0.00      0.00      0.00      0.00      0.00
                  0.00      0.00      0.00      0.00      0.00      0.00      0.00      0.00      0.00      0.00
                  0.00      0.00      0.00      0.00      0.00      0.00      0.00      0.00      0.00      0.00
                  0.00      0.00      0.00      0.00      0.00      0.00      0.00      0.00      0.00      0.00
                  0.00      0.00      0.00      0.00      0.00      0.00      0.00      0.00      0.00      0.00
                  0.00      0.00      0.00      0.00      0.00      0.00      0.00      0.00      0.00      0.00
                  0.00      0.00      0.00      0.00      0.00      0.00      0.00      0.00      0.00      0.00
                  0.00      0.00      0.00      0.00      0.00      0.00      0.00      0.00      0.00      0.00
                  0.00      0.00      0.00      0.00      0.00      0.00      0.00      0.00      0.00      0.00
                  0.00      0.00      0.00      0.00      0.00      0.00      0.00      0.00

134 LG        GREEN AND AMPT LOSS RATE
                 STRTL        0.15  STARTING LOSS
                   DTH        0.32  MOISTURE DEFICIT
                  PSIF        4.95  WETTING FRONT SUCTION
                 XKSAT        0.56  HYDRAULIC CONDUCTIVITY
                 RTIMP       40.00  PERCENT IMPERVIOUS AREA

181 UC        CLARK UNITGRAPH
                    TC        0.15  TIME OF CONCENTRATION
                     R        0.17  STORAGE COEFFICIENT

182 UA        ACCUMULATED-AREA VS. TIME,  11 ORDINATES
                 0.0       3.0       5.0       8.0      12.0      20.0      43.0      75.0      90.0      96.0
               100.0

                                                          ***

                                              UNIT HYDROGRAPH PARAMETERS
                                         CLARK   TC=  0.15 HR,          R=  0.17 HR
                                        SNYDER   TP=  0.17 HR,         CP=  0.60

                                                   UNIT HYDROGRAPH
                                              13 END-OF-PERIOD ORDINATES
             15.        54.        63.        39.        24.        15.         9.         6.         3.         2.
              1.         1.         0.

     ***            ***            ***            ***            ***

                    HYDROGRAPH AT STATION    SWSM8

  TOTAL RAINFALL =    4.20, TOTAL LOSS =    1.93, TOTAL EXCESS =    2.27

 PEAK FLOW     TIME                            MAXIMUM AVERAGE FLOW
                                   6-HR         24-HR        72-HR      24.92-HR
+   (CFS)      (HR)
                         (CFS)
+     43.     12.00                   6.           2.           2.           2.
                       (INCHES)   1.771        2.260        2.262        2.262
                        (AC-FT)      3.           4.           4.           4.

                      CUMULATIVE AREA =    0.03 SQ MI
```

```
*** *** *** *** *** *** *** *** *** *** *** *** *** *** *** *** *** *** *** *** *** *** *** *** *** *** *** *** *** *** *** *** *** *** ***

              *************
              *           *
184 KK        *   DSWSM   *    8
              *           *
              *************
                             RUNOFF FROM SUB-BASIN SWSM8 DRAINS OUTSIDE OF THE STUDY AREA.
                             HYDROGRAPH IS DIVERTED

    DT          DIVERSION
                      ISTAD       DIV.8  DIVERSION HYDROGRAPH IDENTIFICATION

    DI             INFLOW          0.00      10.00      30.00      50.00      70.00      90.00     150.00

    DQ       DIVERTED FLOW         0.00      10.00      30.00      50.00      70.00      90.00     150.00
                                                                ***

     ***            ***            ***            ***            ***

                         DIVERSION HYDROGRAPH    DIV.8

 PEAK FLOW     TIME                            MAXIMUM AVERAGE FLOW
                                   6-HR         24-HR        72-HR      24.92-HR
+   (CFS)      (HR)
                         (CFS)
+     43.     12.00                   6.           2.           2.           2.
                       (INCHES)   1.771        2.260        2.262        2.262
                        (AC-FT)      3.           4.           4.           4.

                      CUMULATIVE AREA =    0.03 SQ MI

     ***            ***            ***            ***            ***

                         HYDROGRAPH AT STATION    DSWSM

 PEAK FLOW     TIME                            MAXIMUM AVERAGE FLOW
                                   6-HR         24-HR        72-HR      24.92-HR
+   (CFS)      (HR)
                         (CFS)
+      0.      0.00                   0.           0.           0.           0.
                       (INCHES)   0.000        0.000        0.000        0.000
                        (AC-FT)      0.           0.           0.           0.

                      CUMULATIVE AREA =    0.03 SQ MI

1
```

RUNOFF SUMMARY
FLOW IN CUBIC FEET PER SECOND
TIME IN HOURS, AREA IN SQUARE MILES

	OPERATION	STATION	PEAK FLOW	TIME OF PEAK	AVERAGE FLOW FOR MAXIMUM PERIOD 6-HOUR	24-HOUR	72-HOUR	BASIN AREA	MAXIMUM STAGE	TIME OF MAX STAGE
+	HYDROGRAPH AT	SWSM1	2683.	12.25	454.	152.	147.	1.99		
+	ROUTED TO	RSWSM	2410.	12.42	454.	152.	146.	1.99		
+									1172.25	12.42
+	HYDROGRAPH AT	SWSM4	289.	12.33	47.	12.	11.	0.34		
+	2 COMBINED AT	CSWSM	2694.	12.42	501.	163.	157.	2.33		
+	DIVERSION TO	DIV.4	2694.	0.00	501.	163.	157.	2.33		
+	HYDROGRAPH AT	DSWSM	0.	0.00	0.	0.	0.	2.33		
+	HYDROGRAPH AT	SWSM2	421.	12.25	65.	20.	19.	0.44		
+	DIVERSION TO	DIV.2	421.	0.00	65.	20.	19.	0.44		
+	HYDROGRAPH AT	DSWSM	0.	0.00	0.	0.	0.	0.44		
+	HYDROGRAPH AT	SWSM3	191.	12.42	30.	8.	7.	0.28		
+	DIVERSION TO	DIV.3	191.	0.00	30.	8.	7.	0.28		

+	HYDROGRAPH AT	DSWSM	0.	0.00	0.	0.	0.	0.28
+	HYDROGRAPH AT	SWSM5	100.	12.25	18.	5.	4.	0.09
+	DIVERSION TO	DIV.5	100.	0.00	18.	5.	4.	0.09
+	HYDROGRAPH AT	DSWSM	0.	0.00	0.	0.	0.	0.09
+	HYDROGRAPH AT	SWSM6	1044.	12.25	181.	58.	56.	0.95
+	DIVERSION TO	DIV.6	1044.	0.00	181.	58.	56.	0.95
+	HYDROGRAPH AT	DSWSM	0.	0.00	0.	0.	0.	0.95
+	HYDROGRAPH AT	SWSM7	150.	12.08	19.	6.	6.	0.10
+	DIVERSION TO	DIV.7	150.	0.00	19.	6.	6.	0.10
+	HYDROGRAPH AT	DSWSM	0.	0.00	0.	0.	0.	0.10
+	HYDROGRAPH AT	SWSM8	43.	12.00	6.	2.	2.	0.03
+	DIVERSION TO	DIV.8	43.	0.00	6.	2.	2.	0.03
+	HYDROGRAPH AT	DSWSM	0.	0.00	0.	0.	0.	0.03

*** NORMAL END OF HEC-1 ***

Morrison, Timothy

From: Bob Stevens - FCDX [rbs@mail.maricopa.gov]
Sent: Wednesday, October 17, 2001 11:17 AM
To: 'tmorriso@Hdrinc.com'; 'mperez@hdrinc.com'
Cc: Bob Stevens - FCDX
Subject: RE: New Contract

I spoke with Sallie McGuire today. She will review the latest PCN's today, and will contact me if there are any comments. Upon her initial inspection, she indicated that the PCN's looked good and appeared like the last submittal.

Part of the new scope will include a maintenance permit to clear and excavate an earthen low flow channel from drop structure at 83rd to confluence of Agua Fria. I don't believe that we will need a design as this will not be a CIP item. The district will prepare a footprint of low flow along with a review of hydraulic "n" values for clearing activities. Consequently, this should be similar to IP for skunk creek.

Some maintenance work including vegetation clearing has already been completed in the New River around Peoria and 91st avenue under the exemption. An earthen low flow will provide a more permanent conveyance of water from specific discharge areas.

Additional work including maintenance permits for remaining structures will be contingent on Sallie's comments. I indicated to her that HDR is on a new contract and that we would "conduct business as usual" unless otherwise directed and continue to bludgeon her with additional PCN's!

-----Original Message-----
From: Morrison, Timothy [mailto:TMorriso@hdrinc.com]
Sent: Wednesday, October 17, 2001 9:28 AM
To: Bob Stevens - FCDX (E-mail)
Subject: New Contract

Contracting has the executed contract. When do you want to get started on the new SOW? Let me know how you want me to proceed and if you need anything. Maybe an initial (small $$) Assignment to handle wrapping up loose ends and developing the remainder of the scope items would be good?

Thanks

> Tim Morrison, P.E.
> Project Manager
>
> HDR Engineering, Inc.
> 2141 E. Highland, Suite 250
> Phoenix, AZ 85016
> Phone: (602) 508-6684
> Fax: (602) 508-6606
> e-mail: tmorriso@hdrinc.com
>
>
>

```
1*************************************
*                                   *
*   FLOOD HYDROGRAPH PACKAGE  (HEC-1)   *
*          JUN 09 1992              *
*          VERSION 4.0.3E           *
*                                   *
*  RUN DATE  10/10/01  TIME  11:06:26   *
*                                   *
*************************************
```

```
*************************************
*                                   *
*   U.S. ARMY CORPS OF ENGINEERS    *
*   HYDROLOGIC ENGINEERING CENTER   *
*        609 SECOND STREET          *
*      DAVIS, CALIFORNIA 95616      *
*          (916) 551-1748           *
*                                   *
*************************************
```

```
X     X  XXXXXXX   XXXXX          X
X     X  X        X     X        XX
X     X  X        X              X
XXXXXXX  XXXX     X        XXXXX  X
X     X  X        X              X
X     X  X        X     X        X
X     X  XXXXXXX   XXXXX         XXX
```

THIS PROGRAM REPLACES ALL PREVIOUS VERSIONS OF HEC-1 KNOWN AS HEC1 (JAN 73), HEC1GS, HEC1DB, AND HEC1KW.

THE DEFINITIONS OF VARIABLES -RTIMP- AND -RTIOR- HAVE CHANGED FROM THOSE USED WITH THE 1973-STYLE INPUT STRUCTURE.
THE DEFINITION OF -AMSKK- ON RM-CARD WAS CHANGED WITH REVISIONS DATED 28 SEP 81. THIS IS THE FORTRAN77 VERSION
NEW OPTIONS: DAMBREAK OUTFLOW SUBMERGENCE , SINGLE EVENT DAMAGE CALCULATION, DSS:WRITE STAGE FREQUENCY,
DSS:READ TIME SERIES AT DESIRED CALCULATION INTERVAL LOSS RATE:GREEN AND AMPT INFILTRATION
KINEMATIC WAVE: NEW FINITE DIFFERENCE ALGORITHM


```
LINE          ID.....1.....2.....3.....4.....5.....6.....7.....8.....9.....10
   1          ID    FILENAME LAVRECALT.DAT
   2          ID    LAVEEN ADMP RECOMMENDED ALTERNATIVE MODEL
   3          ID    OCTOBER 2001
   4          KM    MODIFIED BY PROJECT ENGINEERING CONSULTANTS, LTD. & HDR ENGINNEERING INC
   5          ID
   6          ID
   7          ID
   8          ID    LAVEEN ADMS (FINAL HEC-1) 100-YR 24-HR STORM          CBA FILE # 40916-02-30
   9          ID    HIDDEN VALLEY WATERSHED/CHAMPION DRAIN WATERSHED
  10          ID     INPUT FILE NAME  LAVFUT1A                    DATE: SEPT. 27,2000
  11          ID     24-HOUR SCS TYPE II
  12          ID    80% RETENTION VOLOUME OF FUTURE RETENTION
  13          ID
  14          ID    RELAXED RETENTION 1/2 MILE OF MARICOPA DRAIN
  15          ID    MINUS FIRST FLUSH OF 5YR 24HR VOLUME
  16          ID
  17          ID    MULTIPLAN FOR ROUTING WITHIN THE CHAMPION DRAIN
  18          ID      PLAN 2: CHANNEL, S=.0020 ft/ft, n=.031, BW=14', SS=6:1, D=10', TW=124'
  19          ID
  20          ID    DDM MCUHP1 LAVEEN REVISED HYDROLOGY - FUTURE LANDUSE CONDITIONS
              *DIAGRAM
  21          IT       5                    300
  22          IO       3       0
              * DDM   ***** Updated *****
  23          KK   VR47C
  24          KM   SUB-BASIN VR47C
  25          KM   24-HOUR SCS TYPE II RAINFALL WAS USED TO FIND TC & R FOR THIS BASIN
  26          KM   THIS BASIN USED RAINFALL REDUCTION FACTOR OF  .934
  27          KM     L = 1.65  Kb = .042  Adj. Slope =    7.0
  28          BA    .869
  29          IN      15
  30          KM   RAINFALL DEPTH OF 4.20 WAS SPACIALLY REDUCED AS SHOWN BY THE PB RECORD
  31          PB   3.923
  32          KM   THE FOLLOWING PC RECORD USED A 24-HR SCS TYPE II STORM
  33          PC    .000    .002    .005    .008    .011    .014    .017    .020    .023    .026
  34          PC    .029    .032    .035    .038    .041    .044    .048    .052    .056    .060
  35          PC    .064    .068    .072    .076    .080    .085    .090    .095    .100    .105
  36          PC    .110    .115    .120    .126    .133    .140    .147    .155    .163    .172
  37          PC    .181    .191    .203    .218    .236    .257    .283    .387    .663    .707
  38          PC    .735    .758    .776    .791    .804    .815    .825    .834    .842    .849
  39          PC    .856    .863    .869    .875    .881    .887    .893    .898    .903    .908
  40          PC    .913    .918    .922    .926    .930    .934    .938    .942    .946    .950
  41          PC    .953    .956    .959    .962    .965    .968    .971    .974    .977    .980
  42          PC    .983    .986    .989    .992    .995    .998   1.000
  43          LG    .260    .250   5.700    .250  27.000
  44          UC   1.500    .938
  45          UA       0       5      16      30      65      77      84      90      94      97
  46          UA     100
              *
              * DDM   ***** Preserved *****
```



```
LINE          ID.....1.....2.....3.....4.....5.....6.....7.....8.....9.....10
  47          KK   VR47R
  48          KM    DIVERT RETENTION VOLUME
  49          KM    RELAXED RETENTION VOLUME FROM 72.8 AC-FT
  50          DT  RET47C     67.7
  51          DI        0    1000   10000
  52          DQ        0    1000   10000
              *
              * DDM   ***** Preserved *****
  53          KK  RBR511
  54          KM   ROUTE FLOW FROM COMPUTATION POINT CVR47C TO COMPUTATION POINT CB51C
  55          KM   MARICOPA DRAIN - 47TH AVE. TO 51ST AVE.
  56          RS        2    ELEV      -1
  57          RC     .030    .030    .030    3200    .0011
  58          RX        0      10      20      45     115     140     150     160
  59          RY   1008.2  1008.1    1008    1003    1003    1008  1008.1  1008.2
              *
              * DDM   ***** Updated *****
  60          KK  AVR51C
  61          KM   SUB-BASIN AVR51C
  62          KM   24-HOUR SCS TYPE II RAINFALL WAS USED TO FIND TC & R FOR THIS BASIN
  63          KM   THIS BASIN USED RAINFALL REDUCTION FACTOR OF  .934
  64          KM     L =  .86  Kb = .049  Adj. Slope =   10.0
  65          BA    .285
  66          LG    .250    .190   6.600    .170  30.000
  67          UC    .829    .545
  68          UA       0       5      16      30      65      77      84      90      94      97
  69          UA     100
              *
              * DDM   ***** Preserved *****
  70          KK  AVR51R
  71          KM   DIVERT RETENTION VOLUME
  72          DT  RET51C     21.6
  73          DI        0    1000   10000
  74          DQ        0    1000   10000
              *
              * DDM   ***** Preserved *****
  75          KK  RBR512
  76          KM    ROUTE FLOW FROM SUB-BASIN AVR51C TO COMPUTATION POINT CB51C
  77          KM    ROUTING REVISED TO REFLECT AN URBANIZED CONDITION
  78          RS        4    ELEV      -1
  79          RC    0.035   0.035   0.035    3600   0.001  1010.5
  80          RX        0      20      40      46      56      62      82     102
  81          RY   1010.5  1009.7  1009.0    1006    1006    1009  1009.7  1010.5
              *
              * DDM   ***** Updated *****
```



```
LINE          ID.....1.....2.....3.....4.....5.....6.....7.....8.....9.....10
  82          KK   BR51C
  83          KM   SUB-BASIN BR51C
  84          KM   24-HOUR SCS TYPE II RAINFALL WAS USED TO FIND TC & R FOR THIS BASIN
  85          KM   THIS BASIN USED RAINFALL REDUCTION FACTOR OF  .934
  86          KM     L = 1.21  Kb = .043  Adj. Slope =    6.0
  87          BA    .699
  88          LG    .250    .250   4.900    .350  31.000
  89          UC   1.325    .722
  90          UA       0       5      16      30      65      77      84      90      94      97
  91          UA     100
              *
              * DDM   ***** Preserved *****
  92          KK   BR51R
  93          KM   DIVERT RETENTION VOLUME
  94          KM   RELAXED RETENTION VOLUME FROM 53.6 AC-FT
  95          DT  RET159     50.5
  96          DI        0    1000   10000
  97          DQ        0    1000   10000
              *
              * DDM   ***** Preserved *****
  98          KK   CB51C
  99          KM    COMBINE ROUTED FLOW FROM COMPUTATION POINT CVR47C AND SUB-BASIN AVR51C
 100          KM    WITH RUNOFF FROM SUB-BASIN BR51C
 101          HC       3
              *
              *  ********************************************************************
              *  ********************MODIFICATION MADE FOR ALT 4A*********************
              *  ********************************************************************
              *
              *
              *
              *
              *  ********************************************************************
              *
              *  FOR THE LAVEEN ADMP MODIFICATIONS WERE MADE TO CONVEY FLOWS TO THIS POINT
              *  THIS MODEL USES DETENTION BASINS AND STORM DRAINS TO ACOMPLISH THIS
              *
              *
              *
              *
```

```
                * DDM   ***** Updated *****
  102           KK   DR43C
  103           KM   SUB-BASIN DR43C
  104           KM   24-HOUR SCS TYPE II RAINFALL WAS USED TO FIND TC & R FOR THIS BASIN
  105           KM   THIS BASIN USED RAINFALL REDUCTION FACTOR OF  .934
  106           KM     L = 1.49  Kb = .039  Adj. Slope =   69.0
  107           BA    .922
  108           LG    .250    .250   5.100    .300  38.000
  109           UC    .450    .220
  110           UA       0       5      16      30      65      77      84      90      94      97
  111           UA     100
                *
                * DDM   ***** Preserved *****
1                                          HEC-1 INPUT                                          PAGE  4

LINE            ID.......1.......2.......3.......4.......5.......6.......7.......8.......9......10

  112           KK   DR43R
  113           KM   DIVERT RETENTION VOLUME
  114           DT  RET43C    27.9
  115           DI       0    1000   10000
  116           DQ       0    1000   10000
                *
                *
                *  *********************PROPOSED BASIN IN SUB-BASIN DR43C**********************
                *
  117           KK  43BASN
  118           KM   *********************PROPOSED BASIN IN SUB-BASIN DR43C*********************
  119           KM   DETENTION BASIN AT THE DOBBINS AND 43TH AVE INTERSECTION.
  120           KM   THIS IS A BASIN ADDED FOR THE ADMP ALTERNATE 4A
  121           KM   THE BASIN HAS 10 AC TOP, 7.2 AC BOTTOM AND IS 10FT DEEP WITH 5:1 SIDE SLOPES
  122           KO       1
  123           RS       1    ELEV       0
  124           SA     7.2     7.8     8.3     8.9     9.4    10.0
  125           SQ       0      20      20      20      20      20
  126           SE       0       2       4       6       8      10
                *
                *
                * ******************DOBBINS ROAD STORM DRAIN***********************************
                * ****************ALT6 WILL PICK UP ALL FLOWS FROM DR43C************************
                *
                *
                *
  127           KK  ROA51A
  128           KM   **************DOBBINS ROAD STORM DRAIN*****************************
  129           KM   ROUTE FLOW FROM DR43C WEST (1ST REACH) ALONG DOBBINS TO 47TH AVENUE
  130           RK    3082   .0042    .013            CIRC       3
                * RS      2    ELEV      -1
                * RC   .035    .035    .035    2790   .0042
                * RX      0      40   -  60      74      99     113     133     153
                * RY   1025    1024    1023    1016    1016    1023    1024    1025
                *
                *
                *
                *  *********************DOBBINS ROAD STORM DRAIN**********************************
                *
                *
  131           KK  ROA51B
  132           KM   ****************DOBBINS ROAD STORM DRAIN*****************************
  133           KM   ROUTE FLOW ALONG DOBBINS FROM 47TH TO 51ST AVENUES
  134           KM   CROSS-SECTION REVISED TO REFLECT TO USE STORM DRAIN
  135           RK    2597  0.0033    .013            CIRC       3
                *
                *  RS      2    ELEV      -1
                *  RC   .035    .035    .035    3600   .0017
                *  RX       0      40      60      74      99     113     133     153
                *  RY    1013    1012    1011    1004    1004    1011    1012    1013
                *
                * DDM   ***** Updated *****
1                                          HEC-1 INPUT                                          PAGE  5

LINE            ID.......1.......2.......3.......4.......5.......6.......7.......8.......9......10

  136           KK   OA51B
  137           KM   SUB-BASIN OA51B
  138           KM   24-HOUR SCS TYPE II RAINFALL WAS USED TO FIND TC & R FOR THIS BASIN
  139           KM   THIS BASIN USED RAINFALL REDUCTION FACTOR OF  .934
  140           KM     L = 1.26  Kb = .036  Adj. Slope =  254.0
  141           BA    1.03
  142           LG    .270    .270   6.000    .200  30.000
  143           UC    .233    .074
  144           UA       0       5      16      30      65      77      84      90      94      97
  145           UA     100
                *
                * DDM   ***** Preserved *****

  146           KK   OA51R
  147           KM   DIVERT RETENTION VOLUME
  148           DT   RET51    80.9
  149           DI       0    1000   10000
  150           DQ       0    1000   10000
                *
                *
                *
                *  **************PROPOSED DETENTION BASIN IN SUB-BASIN OA51B******************
                *
  151           KK  DRBASN
  152           KM   **************PROPOSED DETENTION BASIN IN SUB-BASIN OA51B******************
  153           KM   DETENTION BASIN AT THE DOBBINS AND 51ST AVE INTERSECTION.
  154           KM   THIS BASIN WAS ADDED FOR THE ADMP ALTERNATE 4
  155           KM   BASIN HAS 10 AC TOP, 8.5 AC BOTTOM AND IS 5 FT DEEP WITH 5:1 SIDE SLOPES
  156           KO       1
  157           RS       1    ELEV       0
  158           SA     8.5     8.8     9.1     9.4     9.7      10
  159           SQ       0      20      20      20      20      20
  160           SE       0       1       2       3       4       5
                *
                *
                *
                *  *****************NEW SUB-BASIN SPLIT FROM OA51B*****************************
                *
                *
  161           KK   ER47B
  162           KM   SUB-BASIN ER47B
  163           KM   THIS SUB-BASIN SPLIT FROM OA51B TO ALLOW FOR DETENTION TO BE USED BELOW
  164           KM   THE WESTERN CANAL - ALT6A
  165           KM   24-HOUR SCS TYPE II RAINFALL WAS USED TO FIND TC & R FOR THIS BASIN
  166           KM   THIS BASIN USED RAINFALL REDUCTION FACTOR OF  .934
  167           KM     L = 1.26  Kb = .036  Adj. Slope =  254.0
  168           BA    0.34
  169           LG    .270    .270   6.000    .200  30.000
  170           UC    .233    .074
  171           UA       0       5      16      30      65      77      84      90      94      97
  172           UA     100
                *
                *
                *
                *  ***************PROPOSED BASIN BELOW ER47B*********************************
                *
                *
1                                          HEC-1 INPUT                                          PAGE  6

LINE            ID.......1.......2.......3.......4.......5.......6.......7.......8.......9......10

  173           KK  ERBASN
  174           KM   ****************PROPOSED BASIN BELOW ER47B*********************************
  175           KM   DETENTION BASIN AT THE ELLIOT AND 47TH AVE INTERSECTION. THE WESTERN CANAL
  176           KM   IS USED AS A COLLECTOR FACILITY AND OUTLETS TO THIS DETENTION BASIN. THE
  177           KM   BASIN HAS 10 AC TOP, 8.3 AC BOTTOM AND IS 6 FT DEEP WITH 5:1 SIDE SLOPES
  178           KO       1
  179           RS       1    ELEV       0
  180           SA     8.3     8.5     8.8     9.1     9.4     9.7      10
  181           SQ       0      20      20      20      20      20      20
  182           SE       0       1       2       3       4       5       6
                *
                *
                *
                *
                *  ******************51ST AVENUE STORM DRAIN************************************
                *
                *
                *
                *
  183           KK  RER47B
  184           KM   ********************51ST AVENUE STORM DRAIN**********************************
  185           KM   ROUTE THE OUTFLOW FROM THE ELLIOT ROAD BASIN FROM ELLIOT ROAD TO DOBBINS ROAD
  186           RK    7920   .0034    .013            CIRC       3
                *
  187           KK   CDR51
  188           KM   COMBINE ROUTED FLOW FROM SUB-BASIN DR43C AND ER47B TO RUNOFF FROM SUB-BASIN
  189           KM   OA51B - THIS COMBINATION NOW AT DOBBINS ROAD AND 51ST AVE
  190           HC       3
                *
                *
                *  *********************51ST AVENUE STORM DRAIN**********************************
                *
                *
  191           KK  RDR51A
  192           KM   **********************51ST AVENUE STORM DRAIN*********************************
  193           KM   ROUTE FLOWS ALONG 51ST AVE TO A BASIN NEAR 51ST AND BASLINE
  194           KM   CROSS-SECTION REVISED TO REFLECT TO USE STORM DRAIN
  195           RK    2937  0.0053    .013            CIRC       5
                *
                * DDM   ***** Updated *****

  196           KK   SM51C
  197           KM   SUB-BASIN SM51C
```

```
198         KM   24-HOUR SCS TYPE II RAINFALL WAS USED TO FIND TC & R FOR THIS BASIN
199         KM   THIS BASIN USED RAINFALL REDUCTION FACTOR OF  .934
200         KM     L = 1.29  Kb = .045  Adj. Slope =   12.0
201         BA    .511
202         LG    .290    .250   5.200    .290  17.000
203         UC   1.054    .705
204         UA       0       5      16      30      65      77      84      90      94      97
205         UA     100
            *
            * DDM   ***** Preserved *****
1                                      HEC-1 INPUT                                      PAGE  7

LINE        ID.......1.......2.......3.......4.......5.......6.......7.......8.......9.....10


206         KK   SM51R
207         KM   DIVERT RETENTION VOLUME
208         DT  RET51C    23.0
209         DI       0    1000   10000
210         DQ       0    1000   10000
            *
            *


211         KK   C51SM
212         KM   COMBINE SUBARAREA SM51C WITH 51ST AVE STORM DRAIN
213         HC       2
            *
            *
            *  ********************51ST AVENUE STORM DRAIN*********************************
            *
            *


214         KK  RDR51B
215         KM   ***********PROPOSED 51ST AVENUE STORM DRAIN**********************************
216         KM   ROUTE FLOWS ALONG 51ST AVE TO A BASIN NEAR 51ST AND BASLINE
217         KM   CROSS-SECTION REVISED TO REFLECT TO USE STORM DRAIN
218         RK    2750 0.0053    .013            CIRC       7
            *
            *
            *  ********PROPOSED BASIN IN SUB-BASIN BR51C SOUTHERN AND BASELINE**************
            *
            *


219         KK  BRBASN
220         KM   ****************PROPOSED DETENTION BASIN IN SUB-BASIN BR51C*****************
221         KM   DETENTION BASIN AT THE BASELINE AND 51ST AVE INTERSECTION.
222         KM
223         KM   BASIN HAS 10 AC TOP, 7.7 AC BOTTOM AND IS 8 FT DEEP WITH 5:1 SIDE SLOPES
224         RS       1    ELEV       0
225         SA     7.7     8.0     8.3     8.6     8.9     9.2     9.5     9.8   10.00
226         SQ       0      50      50      50      50      50      50      50      50
227         SE       0       1       2       3       4       5       6       7       8
            *
            *
            *  ************BASLINE ROAD STORM DRAIN*****************************************
            *
            *


228         KK   DBR51
229         KM   ************BASLINE ROAD STORM DRAIN*****************************************
230         KM   ROUTE FLOWS WEST ALONG BASELINE TO THE LAVEEN CONVEYANCE CHANNEL
231         KM   CROSS-SECTION REVISED TO REFLECT TO USE STORM DRAIN
232         RK    2640   0.003    .013            CIRC       4
            *
            *
1                                      HEC-1 INPUT                                      PAGE  8

LINE        ID.......1.......2.......3.......4.......5.......6.......7.......8.......9.....10


233         KK   CB51D
234         KM    COMBINE ROUTED FLOW FROM COMPUTATION POINT CB51C AND FLOWS FROM 51ST
235         KM    AVENUE STORM DRAIN PROPOSED BY THE LAVEEN ADMP
236         HC       2
            *
            *
            *
            * DDM   ***** Preserved *****


237         KK  RB1591
238         KM    ROUTE FLOW FROM COMPUTATION POINT CB51C TO COMPUTATION POINT CB159C
239         KM    MARICOPA DRAIN FROM 51ST AVE TO 59TH AVE.
240         RS       3    ELEV      -1
241         RC    .030    .030    .030    5200   .0011
242         RX       0      10      20      45     125     150     160     170
243         RY  1000.2  1000.1    1000     995     995    1000  1000.1  1000.2
            *
            * DDM   ***** Updated *****


244         KK  AVR55C
245         KM   SUB-BASIN AVR55C
246         KM   24-HOUR SCS TYPE II RAINFALL WAS USED TO FIND TC & R FOR THIS BASIN
247         KM   THIS BASIN USED RAINFALL REDUCTION FACTOR OF  .934
248         KM     L =  .93  Kb = .051  Adj. Slope =    5.0
249         BA    .241
250         LG    .250    .150   8.000    .100  29.000
251         UC   1.212    .973
252         UA       0       5      16      30      65      77      84      90      94      97
253         UA     100
            *
            * DDM   ***** Preserved *****


254         KK  AVR55R
255         KM   DIVERT RETENTION VOLUME
256         DT  RET55C    25.6
257         DI       0    1000   10000
258         DQ       0    1000   10000
            *
            * DDM   ***** Preserved *****


259         KK  RB1592
260         KM    ROUTE FLOW FROM SUBASIN AVR55C TO COMPUTATION POINT CB159C
261         KM   ROUTING REVISED TO REFLECT URBANIZED CONDITIONS
262         RS       3    ELEV      -1
263         RC   0.035   0.035   0.035    3600   0.001
264         RX       0      20      40      46      56      62      82     102
265         RY    1004    1003    1002     999     999    1002    1003    1004
            *
            * DDM   ***** Updated *****
1                                      HEC-1 INPUT                                      PAGE  9

LINE        ID.......1.......2.......3.......4.......5.......6.......7.......8.......9.....10


266         KK  BR159C
267         KM   SUB-BASIN BR159C
268         KM   24-HOUR SCS TYPE II RAINFALL WAS USED TO FIND TC & R FOR THIS BASIN
269         KM   THIS BASIN USED RAINFALL REDUCTION FACTOR OF  .934
270         KM     L = 1.68  Kb = .054  Adj. Slope =    8.0
271         BA    .675
272         LG    .170    .250   4.800    .420  28.000
273         UC   1.500   1.100
274         UA       0       5      16      30      65      77      84      90      94      97
275         UA     100
            *
            * DDM   ***** Preserved *****


276         KK  BR159R
277         KM   DIVERT RETENTION VOLUME
278         KM   RELAXED RETENTION VOLUME FROM 43.2 AC-FT
279         DT  RET159    39.5
280         DI       0    1000   10000
281         DQ       0    1000   10000
            *
            * DDM   ***** Updated *****


282         KK   VR59C
283         KM   SUB-BASIN VR59C
284         KM   24-HOUR SCS TYPE II RAINFALL WAS USED TO FIND TC & R FOR THIS BASIN
285         KM   THIS BASIN USED RAINFALL REDUCTION FACTOR OF  .934
286         KM     L =  .75  Kb = .083  Adj. Slope =    4.0
287         BA    .233
288         LG    .130    .150   7.000    .180   9.000
289         UC   1.500   1.058
290         UA       0       5      16      30      65      77      84      90      94      97
291         UA     100
            *
            * DDM   ***** Preserved *****


292         KK  RB1593
293         KM   ROUTE FLOW FROM SUB-BASIN VR59C TO COMPUTATION POINT CB159C
294         KM   ROUTING REVISED TO REFLECT URBANIZED CONDITIONS
295         RS       3    ELEV      -1
296         RC   0.035   0.035   0.035    3000  0.0015
297         RX       0      20      40      46      56      62      82     102
298         RY    1002  1001.3    1001     998     998    1001  1001.3    1002
            *
            * DDM   ***** Preserved *****


299         KK  CB159N
300         KM     COMBINE ROUTED FLOWS FROM COMPUTATION POINT CB51C AND SUB-BASINS AVR51C
301         KM     AND VR59C WITH RUNOFF FROM SUB-BASIN BR159C
302         KM     CP (NORTH FLOWS) AT 59TH AVE AND BASELINE RD.
303         HC       4
            *
            *
            *
            * DDM   ***** Updated *****
1                                      HEC-1 INPUT                                      PAGE 10

LINE        ID.......1.......2.......3.......4.......5.......6.......7.......8.......9.....10


304         KK   OA55C
305         KM   SUB-BASIN OA55C
306         KM   24-HOUR SCS TYPE II RAINFALL WAS USED TO FIND TC & R FOR THIS BASIN
307         KM   THIS BASIN USED RAINFALL REDUCTION FACTOR OF  .934
308         KM     L =  .96  Kb = .049  Adj. Slope =    3.0
309         BA    .246
310         LG    .290    .250   4.800    .360  19.000
```

```
                *
                *
                *
                * DDM   ***** Preserved *****
1                                       HEC-1 INPUT                                                    PAGE 12

          LINE      ID.......1.......2.......3.......4.......5.......6.......7.......8.......9......10


           371      KK  RB259
           372      KM     ROUTE FLOW FROM COMPUTATION POINT CDR59C TO COMPUTATION POINT CB259C
           373      KM     CROSS-SECTION REVISED TO REFLECT URBANIZED CONDITIONS
           374      KM     REVISED SLOPW FROM .0046 TO REFLECT A VELOCITY OF LESS THAN 4 FT/SEC
           375      KM
           376      RS       2    ELEV      -1
           377      RC   0.035    0.02   0.035    5280  0.0015
           378      RX       0      40      60      76      80      96     129     149
           379      RY    1024    1023    1022    1016    1016    1022    1023    1024
                    *
                    *
                    * DDM   ***** Updated *****

           380      KK  BR259C
           381      KM   SUB-BASIN BR259C
           382      KM   24-HOUR SCS TYPE II RAINFALL WAS USED TO FIND TC & R FOR THIS BASIN
           383      KM   THIS BASIN USED RAINFALL REDUCTION FACTOR OF  .934
           384      KM     L = 1.90  Kb = .037  Adj. Slope =   19.0
           385      BA   1.012
           386      LG    .230    .250   4.800    .360  33.000
           387      UC    .954    .583
           388      UA       0       5      16      30      65      77      84      90      94      97
           389      UA     100
                    *
                    * DDM   ***** Preserved *****

           390      KK  BR259R
           391      KM   DIVERT RETENTION VOLUME
           392      KM   RELAXED RETENTION VOLUME FROM 68.3 AC-FT.
           393      DT  RET259    67.0
           394      DI       0    1000   10000
           395      DQ       0    1000   10000
                    *
                    * DDM   ***** Preserved *****

           396      KK  CB259S
           397      KM   COMBINE FLOWS FROM THE SOUTH AT 59TH AVENUE
           398      HC       2
                    *
                    * DDM   ***** Preserved *****

           399      KK   CB259
           400      KM   COMBINE NORTH AND SOUTH FLOWS
           401      HC       2
                    *
                    * DDM   ***** Preserved *****

           402      KK  RBR163
           403      KM   ROUTE FLOW FROM COMPUTATION POINT CB1591 TO COMPUTATION POINT CB163C
           404      KM   MARICOPA DRAIN FROM 59TH AVE. TO 63RD AVE.
           405      KM   ADJUST THE SLOPE FROM .0011 TO REFLECT A VELOCITY OF LESS THAN 5 FT/SEC
           406      RS       2    ELEV      -1
           407      RC    .030    .030    .030    2640    .0009
           408      RX       0      10      20      45     135     160     170     180
1                                       HEC-1 INPUT                                                    PAGE 13

          LINE      ID.......1.......2.......3.......4.......5.......6.......7.......8.......9......10

           409      RY   997.8   997.7   997.6   992.6   992.6   997.6   997.7   997.8
                    *
                    * DDM   ***** Updated *****

           410      KK  BR263C
           411      KM   SUB-BASIN BR263C
           412      KM   24-HOUR SCS TYPE II RAINFALL WAS USED TO FIND TC & R FOR THIS BASIN
           413      KM   THIS BASIN USED RAINFALL REDUCTION FACTOR OF  .934
           414      KM     L = 1.45  Kb = .057  Adj. Slope =   19.0
           415      BA    .494
           416      LG    .110    .250   4.700    .480  38.000
           417      UC   1.104    .831
           418      UA       0       5      16      30      65      77      84      90      94      97
           419      UA     100
                    *
                    * DDM   ***** Preserved *****

           420      KK  BR263R
           421      KM   DIVERT RETENTION VOLUME
           422      KM   RELAXED RETENTION VOLUME FROM 32.0 AC-FT.
           423      DT  RET263    29.3
           424      DI       0    1000   10000
           425      DQ       0    1000   10000
                    *
                    * DDM   ***** Preserved *****

           426      KK     63S
           427      KM   COMBINE ROUTED FLOW FROM COMPUTATION POINT CB159C WITH RUNOFF FROM SUB-BASINS
```

```
           311      UC   1.500   1.249
           312      UA       0       5      16      30      65      77      84      90      94      97
           313      UA     100
                    *
                    * DDM   ***** Preserved *****

           314      KK   OA55R
           315      KM   DIVERT RETENTION VOLUME
           316      DT  RET55C     2.4
           317      DI       0    1000   10000
           318      DQ       0    1000   10000
                    *
                    *
                    * DDM   ***** Preserved *****

           319      KK   RD57C
           320      KM   ROUTE FLOW FROM COMPUTATION POINT CPO55C TO COMPUTAION CDR57C
           321      KM   CROSS-SECTION REVISED TO REFLECT URBANIZED CONDITIONS
           322      RS       2    ELEV      -1
           323      RC   0.035   0.035   0.035    2920   0.001
           324      RX       0      40      60      72      97     109     129     149
           325      RY    1030    1029    1028    1022    1022    1028    1029    1030
                    *
                    *
                    * DDM   ***** Updated *****

           326      KK   DR57C
           327      KM   SUB-BASIN DR57C
           328      KM   24-HOUR SCS TYPE II RAINFALL WAS USED TO FIND TC & R FOR THIS BASIN
           329      KM   THIS BASIN USED RAINFALL REDUCTION FACTOR OF  .934
           330      KM     L =  .71  Kb = .054  Adj. Slope =    3.0
           331      BA    .118
           332      LG    .300    .250   4.800    .360  15.000
           333      UC   1.500   1.492
           334      UA       0       5      16      30      65      77      84      90      94      97
           335      UA     100
                    *
                    * DDM   ***** Preserved *****

           336      KK   DR57R
           337      KM   DIVERT RETENTION VOLUME
           338      DT   RET27    12.8
           339      DI       0    1000   10000
           340      DQ       0    1000   10000
                    *
                    * DDM   ***** Preserved *****
1                                       HEC-1 INPUT                                                    PAGE 11

          LINE      ID.......1.......2.......3.......4.......5.......6.......7.......8.......9......10


           341      KK  CDR57C
           342      KM   COMBINE ROUTED FLOW FROM COMPUTATION POINT CPO55C TO RUNOFF FROM SUB-BASIN
           343      KM   DR57C
           344      HC       2
                    *
                    * DDM   ***** Preserved *****

           345      KK   RD59C
           346      KM   ROUTE FLOW FROM COMPUTATION POINT CDR57C TO COMPUTATION POINT CDR59C
           347      KM   CROSS-SECTION REVISED TO REFLECT URBANIZED CONDITIONS
           348      RS       1    ELEV      -1
           349      RC   0.035   0.035   0.035    1200  0.0025
           350      RX       0      40      60      72      97     109     129     149
           351      RY    1026    1025    1024    1019    1019    1024    1025    1026
                    *
                    * DDM   ***** Updated *****

           352      KK   DR59C
           353      KM   SUB-BASIN DR59C
           354      KM   24-HOUR SCS TYPE II RAINFALL WAS USED TO FIND TC & R FOR THIS BASIN
           355      KM   THIS BASIN USED RAINFALL REDUCTION FACTOR OF  .934
           356      KM     L =  .69  Kb = .048  Adj. Slope =    7.0
           357      BA    .117
           358      LG    .230    .250   4.800    .370  37.000
           359      UC   1.554   1.524
           360      UA       0       5      16      30      65      77      84      90      94      97
           361      UA     100
                    *
                    * DDM   ***** Preserved *****

           362      KK   DR59R
           363      KM   DIVERT RETENTION VOLUME
           364      DT  RET59C    10.4
           365      DI       0    1000   10000
           366      DQ       0    1000   10000
                    *
                    * DDM   ***** Preserved *****

           367      KK  CDR59C
           368      KM   COMBINE ROUTED FLOW FROM COMPUTATION POINT CDR57C TO RUNOFF FROM SUB-BASIN
           369      KM   DR59C
           370      HC       2
                    *
                    *
```

```
428         KM   BR163C AND BR263C AND ROUTED FLOW FROM COMPUTATION POINT  CB259C
429         HC       2
            *
            * DDM   ***** Updated *****

430         KK  BR163C
431         KM   SUB-BASIN BR163C
432         KM   24-HOUR SCS TYPE II RAINFALL WAS USED TO FIND TC & R FOR THIS BASIN
433         KM   THIS BASIN USED RAINFALL REDUCTION FACTOR OF  .934
434         KM     L =  .91  Kb = .040  Adj. Slope =    9.0
435         BA    .255
436         LG    .220    .250   5.400    .240  21.000
437         UC    .808    .590
438         UA       0       5      16      30      65      77      84      90      94      97
439         UA     100
            *
            * DDM   ***** Preserved *****

440         KK  BR163R
441         KM   DIVERT RETENTION VOLUME
442         DT  RET163     6.6
443         DI       0    1000   10000
444         DQ       0    1000   10000
            *
            * DDM   ***** Preserved *****
```



```
LINE        ID.......1.......2.......3.......4.......5.......6.......7.......8.......9......10

445         KK   CB163
446         KM   COMBINE FLOWS ON THE SOUTH SIDE OF BASELINE
447         HC       2
            *
            * DDM   ***** Preserved *****

448         KK   RCD1C
449         KM   ROUTE FLOW FROM COMPUTATION POINT CB163C TO COMPUTATION POINT CPCD1C
450         KM   MARICOPA DRAIN FROM 63RD AVE TO 67TH AVE.
451         RS       2     ELEV      -1
452         RC    .030    .030    .030    2640   .0011
453         RX       0      10      20      45     135     160     170     180
454         RY   996.2   996.1     996     991     991     996   996.1   996.2
            *
            * DDM   ***** Updated *****

455         KK   BR67C
456         KM   SUB-BASIN BR67C
457         KM   24-HOUR SCS TYPE II RAINFALL WAS USED TO FIND TC & R FOR THIS BASIN
458         KM   THIS BASIN USED RAINFALL REDUCTION FACTOR OF  .934
459         KM     L =  .79  Kb = .054  Adj. Slope =    5.0
460         BA    .127
461         LG    .300    .150   7.000    .140  15.000
462         UC   1.163   1.174
463         UA       0       5      16      30      65      77      84      90      94      97
464         UA     100
            *
            *
            * DDM   ***** Preserved *****

465         KK  RCD1C2
466         KM    ROUTE FLOW FROM SUBASIN BR67C TO COMPUTATION POINT CPCD1C
467         KM   CROSS-SECTION WAS REVISED TO REFLECT URBANIZED CONDITIONS(CHANNEL)
468         RS       1     ELEV      -1
469         RC   0.035   0.035   0.035    2600  0.0014
470         RX       0      40      60      85      95     120     140     160
471         RY    1000    1000    1000     995     995    1000    1000    1000
            *
            * DDM   ***** Updated *****

472         KK    CD1C
473         KM   SUB-BASIN CD1C
474         KM   24-HOUR SCS TYPE II RAINFALL WAS USED TO FIND TC & R FOR THIS BASIN
475         KM   THIS BASIN USED RAINFALL REDUCTION FACTOR OF  .934
476         KM     L =  .90  Kb = .049  Adj. Slope =   27.0
477         BA    .464
478         LG    .190    .250   4.700    .410  30.000
479         UC    .583    .290
480         UA       0       5      16      30      65      77      84      90      94      97
481         UA     100
            *
            * DDM   ***** Preserved *****
```



```
LINE        ID.......1.......2.......3.......4.......5.......6.......7.......8.......9......10

482         KK    CD1R
483         KM   DIVERT RETENTION VOLUME
484         DT   RET1C    32.0
485         DI       0    1000   10000
486         DQ       0    1000   10000
            *
            * DDM   ***** Preserved *****

487         KK  CPCD1C
488         KM    COMBINE ROUTED FLOWS FROM COMPUTATION POINT CB163C AND SUB-BASIN BR67C
489         KM    WITH RUNOFF FROM SUB-BASIN CD1C
490         HC       3
            *
            * DDM   ***** Preserved *****

491         KK  RCD2C1
492         KM    ROUTE FLOW FROM COMPUTATION POINT CPCD1C TO COMPUTATION POINT CIRSMC
493         KM    MARIOCPA DRAIN FROM 67TH AVE TO 75TH AVE.
494         KM    ADJUST SLOPE FROM .0011 TO REFLECT A VELOCITY OF LESS THAN 5 FT/SEC
495         RS       3     ELEV      -1
496         RC    .030    .030    .030    3600   .0007
497         RX       0      10      20      45     155     180     190     200
498         RY   990.2   990.1     990     985     985     990   990.1   990.2
            *
            *
            *
            *
            *  (SHOULD BEGIN WITH IR62B BUT DISTRICT HYDROLOGY DID NOT INCLUDE)
            *
            * DDM   ***** Updated *****

499         KK   ER55B
500         KM   SUB-BASIN ER55B
501         KM   24-HOUR SCS TYPE II RAINFALL WAS USED TO FIND TC & R FOR THIS BASIN
502         KM   THIS BASIN USED RAINFALL REDUCTION FACTOR OF  .934
503         KM     L =  .79  Kb = .050  Adj. Slope =    8.0
504         BA    .256
505         LG    .260    .260   6.000    .210  27.000
506         UC    .908    .599
507         UA       0       5      16      30      65      77      84      90      94      97
508         UA     100
            *
            * DDM   ***** Preserved *****

509         KK   ER55R
510         KM   DIVERT RETENTION VOLUME
511         DT   RET55    19.2
512         DI       0    1000   10000
513         DQ       0    1000   10000
            *
            *
            * DDM   ***** Preserved *****
```



```
LINE        ID.......1.......2.......3.......4.......5.......6.......7.......8.......9......10

514         KK   RE59B
515         KM   ROUTE FLOWS FROM CONCENTRATION POINT CRE55B TO CP CER59B
516         KM   ROUTING REVISED TO REFLECT URBANIZED CONDITIONS
517         RS       2     ELEV      -1
518         RC    .035    .035    .035    2600    .002
519         RX       0      30      50      55      65      70      90     120
520         RY    1026    1024    1023    1020    1020    1023    1024    1026
            *
            * DDM   ***** Updated *****

521         KK   ER59B
522         KM   SUB-BASIN ER59B
523         KM   24-HOUR SCS TYPE II RAINFALL WAS USED TO FIND TC & R FOR THIS BASIN
524         KM   THIS BASIN USED RAINFALL REDUCTION FACTOR OF  .934
525         KM     L =  .95  Kb = .030  Adj. Slope =    8.0
526         BA    .259
527         LG    .130    .250   5.000    .370  71.000
528         UC    .671    .492
529         UA       0       5      16      30      65      77      84      90      94      97
530         UA     100
            *
            * DDM   ***** Preserved *****

531         KK   ER59R
532         KM   DIVERT RETENTION VOLUME
533         DT   RET59    23.2
534         DI       0    1000   10000
535         DQ       0    1000   10000
            *
            * DDM   ***** Preserved *****

536         KK  CER59B
537         KM   COMBINE ROUTED FLOW FROM CP CRE55B TO RUNOFF FROM SUBBASIN ER59B
538         HC       2
            *
            *
            * DDM   ***** Preserved *****
            *

539         KK  RIR63B
540         KM     ROUTE FLOW FROM COMPUTATION POINT CER59B TO COMPUTATION POINT CIR63B.
541         KM     CP CIR63B IS LOCATED ON THE WESTERN EDGE OF THE STUDY AREA WHICH IS BOUNDED
542         KM     BY A CONCRETE IRRIGATION CANAL AND EARTHEN ROADWAY.  THE IRRIGATION CANAL
543         KM     IS OVERTOPPED AND FLOW CONTINUES ITS NATURAL FLOW PATH TO THE WEST.  THE
544         KM     FLOW IS APPROXIMATELY 45 CFS SOUTH TO MARICOPA DRAIN.
545         DT  DIR63B
```

```
 546          DI       0      45     100     200     400     600     800
 547          DQ       0       0      55     155     355     555     755
              *
              * DDM   ***** Updated *****
```



```
LINE          ID.......1.......2.......3.......4.......5.......6.......7.......8.......9......10


 548          KK   IR63B
 549          KM   SUB-BASIN IR63B
 550          KM   24-HOUR SCS TYPE II RAINFALL WAS USED TO FIND TC & R FOR THIS BASIN
 551          KM   THIS BASIN USED RAINFALL REDUCTION FACTOR OF  .934
 552          KM     L =  .82  Kb = .034  Adj. Slope =   11.0
 553          BA    .124
 554          LG    .130    .250   4.800    .400  71.000
 555          UC    .575    .561
 556          UA       0       5      16      30      65      77      84      90      94      97
 557          UA     100
              *
              * DDM   ***** Preserved *****

 558          KK    IR63
 559          KM   DIVERT RETENTION VOLUME
 560          DT   RET63    11.2
 561          DI       0    1000   10000
 562          DQ       0    1000   10000
              *

 563          KK  CIR63C
 564          KM   COMBINE RETRIEVED ROUTED FLOW FROM CER59B TO RUNOFF FROM SUB-BASIN
 565          KM   IR65C
 566          HC       2
              *
              * DDM   ***** Preserved *****

 567          KK  RIR65C
 568          KM    ROUTE RETRIEVED FLOW FROM SUB-BASIN IR63B TO COMPUTATION POINT CIR65C
 569          KM   CROSS-SECTION REVISED TO REFLECT URBANIZED CONDITIONS
 570          RS       7    ELEV      -1
 571          RC   0.030   0.030   0.030    3300  0.0010
 572          RX       0       1      11      21      26      31      41      46
 573          RY       6       5       4       1       1       4       5       6
              *
              * DDM   ***** Updated *****

 574          KK   IR65C
 575          KM   SUB-BASIN IR65C
 576          KM   24-HOUR SCS TYPE II RAINFALL WAS USED TO FIND TC & R FOR THIS BASIN
 577          KM   THIS BASIN USED RAINFALL REDUCTION FACTOR OF  .934
 578          KM     L =  .84  Kb = .052  Adj. Slope =   13.0
 579          BA    .170
 580          LG    .280    .250   4.800    .360  21.000
 581          UC    .829    .718
 582          UA       0       5      16      30      65      77      84      90      94      97
 583          UA     100
              *
              * DDM   ***** Preserved *****
```



```
LINE          ID.......1.......2.......3.......4.......5.......6.......7.......8.......9......10


 584          KK   IR65R
 585          KM   DIVERT RETENTION VOLUME
 586          DT   RET65C    14.4
 587          DI       0    1000   10000
 588          DQ       0    1000   10000
              *
              * DDM   ***** Preserved *****

 589          KK  CIR65C
 590          KM   COMBINE RETRIEVED ROUTED FLOW FROM SUB-BASIN IR63B TO RUNOFF FROM SUB-BASIN
 591          KM   IR65C
 592          HC       2
              *
              * DDM   ***** Preserved *****

 593          KK   RIRDC
 594          KM   ROUTE FLOW FROM COMPUTATION POINT CIR65C TO COMPUTATION POINT CIRDC
 595          KM   CROSS-SECTION REVISED TO REFLECT URBANIZED CONDITIONS
 596          RS       2    ELEV      -1
 597          RC    0.03    0.03    0.03    3200  0.0018
 598          RX       0       1      10      20      30      40      50      51
 599          RY  1014.5    1014    1013    1010    1010    1013    1014  1014.5
              *
              * DDM   ***** Preserved *****

 600          KK  DIIRDC
 601          KM    ROUTED FLOW FROM COMPUTATION POINT CIR65C IS SPLIT AT COMPUTATION POINT
 602          KM    CIRDC
 603          DT  RIR65C
 604          DI       0      16      34      51      71      80     100     120     150
 605          DQ       0      16      25      32      40      49      69      89     119
              *
              * DDM   ***** Updated *****

 606          KK    IRDC
 607          KM   SUB-BASIN IRDC
 608          KM   24-HOUR SCS TYPE II RAINFALL WAS USED TO FIND TC & R FOR THIS BASIN
 609          KM   THIS BASIN USED RAINFALL REDUCTION FACTOR OF  .934
 610          KM     L = 1.47  Kb = .038  Adj. Slope =   12.0
 611          BA    .525
 612          LG    .190    .250   4.800    .370  51.000
 613          UC    .958    .694
 614          UA       0       5      16      30      65      77      84      90      94      97
 615          UA     100
              *
              * DDM   ***** Preserved *****

 616          KK    IRDR
 617          KM   DIVERT RETENTION VOLUME
 618          DT   RETRDC    43.2
 619          DI       0    1000   10000
 620          DQ       0    1000   10000
              *
              * DDM   ***** Preserved *****
```



```
LINE          ID.......1.......2.......3.......4.......5.......6.......7.......8.......9......10


 621          KK   CIRDC
 622          KM    COMBINE ROUTED FLOW FROM COMPUTATION POINT CIR65C TO RUNOFF FROM SUB-BASIN
 623          KM    IRDC
 624          HC       2
              *
              * DDM   ***** Preserved *****

 625          KK  RIRSMC
 626          KM    ROUTE FLOW COMPUTATION POINT CIRDC TO COMPUTATION POINT CIRSMC
 627          KM   CROSS-SECTION REVISED TO REFLECT URBANIZED CONDITIONS
 628          RS       3    ELEV      -1
 629          RC   0.035   0.035   0.035    3400  0.0058
 630          RX       0      40      60      70      80      90     110     150
 631          RY    1006    1005    1004     999     999    1004    1005    1006
              *
              * DDM   ***** Updated *****

 632          KK   IRSMC
 633          KM   SUB-BASIN IRSMC
 634          KM   24-HOUR SCS TYPE II RAINFALL WAS USED TO FIND TC & R FOR THIS BASIN
 635          KM   THIS BASIN USED RAINFALL REDUCTION FACTOR OF  .934
 636          KM     L =  .88  Kb = .043  Adj. Slope =   32.0
 637          BA    .241
 638          LG    .210    .250   4.500    .430  34.000
 639          UC    .479    .332
 640          UA       0       5      16      30      65      77      84      90      94      97
 641          UA     100
              *
              * DDM   ***** Preserved *****

 642          KK   IRSMR
 643          KM   DIVERT RETENTION VOLUME
 644          KM   RELAXED RETENTION VOLUME FROM 20.0 AC-FT
 645          DT  RETSMC    19.1
 646          DI       0    1000   10000
 647          DQ       0    1000   10000
              *
              * DDM   ***** Preserved *****

 648          KK  CIRSMS
 649          KM
 650          HC       2
              *
              * DDM   ***** Preserved *****

 651          KK  CIRSMC
 652          KM   COMBINE FLOWS IN MARICOPA DRAIN JUST WEST OF 75TH AVE
 653          HC       2
              *
              * DDM   ***** Updated *****
```



```
LINE          ID.......1.......2.......3.......4.......5.......6.......7.......8.......9......10


 654          KK    CD2C
 655          KM   SUB-BASIN CD2C
 656          KM   24-HOUR SCS TYPE II RAINFALL WAS USED TO FIND TC & R FOR THIS BASIN
 657          KM   THIS BASIN USED RAINFALL REDUCTION FACTOR OF  .934
 658          KM     L = 1.57  Kb = .043  Adj. Slope =    4.0
 659          BA    .598
 660          LG    .240    .150   8.400    .090  31.000
 661          UC   1.500   1.116
 662          UA       0       5      16      30      65      77      84      90      94      97
 663          UA     100
              *
              * DDM   ***** Preserved *****
```

```
 664            KK    CD2R
 665            KM    DIVERT RETENTION VOLUME
 666            KM    RELAXED RETENTION VOLUME FROM 44.8 AC-FT.
 667            DT    RET2C     39.7
 668            DI        0    1000   10000
 669            DQ        0    1000   10000
                *
                *
                * DDM   ***** Preserved *****

 670            KK    CCD2C
 671            KM    COMBINE FLOW FROM CD2C AND MARIOCPA DRAIN
 672            KM    MARICOPA DRAIN AT 1000 FT EAST OF 75TH AVE AND SOUTH MOUNTAIN AVE. (1/2 MILE
 673            KM    BETWEEN DOBBINS AND BASELINE ROADS.)
 674            HC        2
                *
                * DDM   ***** Preserved *****

 675            KK    RCD3C1
 676            KM     MARICOPA DRAIN FROM JUST EAST OF 75TH AVE ALONG POWERLINE RD (INDIAN
 677            KM     RESERVATION BOUNDARY).
 678            KM     ADJUST SLOPE FROM .0011 TO REFLECT A VELOCITY OF LESS THAN 5 FT/SEC
 679            RS        2    ELEV      -1
 680            RC     .030    .030    .030    3700   .0007
 681            RX        0      10      20      45     165     190     200     210
 682            RY    986.2   986.1     986     981     981     986   986.1   986.2
                *
                * DDM   ***** Updated *****

 683            KK    CD4C
 684            KM    SUB-BASIN CD4C
 685            KM    24-HOUR SCS TYPE II RAINFALL WAS USED TO FIND TC & R FOR THIS BASIN
 686            KM    THIS BASIN USED RAINFALL REDUCTION FACTOR OF  .934
 687            KM      L =  .64  Kb = .051  Adj. Slope =    9.0
 688            BA     .190
 689            LG     .250    .250   4.900    .350  29.000
 690            UC     .771    .500
 691            UA        0       5      16      30      65      77      84      90      94      97
 692            UA      100
                *
                * DDM   ***** Preserved *****
1                                           HEC-1 INPUT                                        PAGE 21

 LINE           ID.......1.......2.......3.......4.......5.......6.......7.......8.......9......10


 693            KK    CD4R
 694            KM    DIVERT RETENTION VOLUME
 695            DT    RETD4C    13.6
 696            DI        0    1000   10000
 697            DQ        0    1000   10000
                *
                *
                * DDM   ***** Preserved *****

 698            KK    RCD3C2
 699            KM    ROUTE FLOW FROM COMPUTATION POINT CPCD4C TO COMPUTATION POINT CPCD3C
 700            KM    CROSS-SECTION REVISED TO REFLECT URBANIZED CONDITIONS
 701            RS        3    ELEV      -1
 702            RC    0.035   0.035   0.035    5200  0.0024
 703            RX        0      40      50      55      60      65      70     110
 704            RY      988     987     986     983     983     986     987     988
                *
                * DDM   ***** Updated *****

 705            KK    CD3C
 706            KM    SUB-BASIN CD3C
 707            KM    24-HOUR SCS TYPE II RAINFALL WAS USED TO FIND TC & R FOR THIS BASIN
 708            KM    THIS BASIN USED RAINFALL REDUCTION FACTOR OF  .934
 709            KM      L = 1.15  Kb = .044  Adj. Slope =   10.0
 710            BA     .480
 711            LG     .240    .150   7.000    .140  33.000
 712            UC     .929    .579
 713            UA        0       5      16      30      65      77      84      90      94      97
 714            UA      100
                *
                * DDM   ***** Preserved *****

 715            KK    CD3R
 716            KM    DIVERT RETENTION VOLUME
 717            KM    RELAXED RETENTION VOLUME FROM 35.2 AC-FT.
 718            DT    RETD3C    32.6
 719            DI        0    1000   10000
 720            DQ        0    1000   10000
                *
                * DDM   ***** Preserved *****

 721            KK    CPCD3C
 722            KM    COMBINE ROUTED FLOW FROM COMPUTATION POINT CPCD4C, ROUTED FLOW FROM DIVERSION
 723            KM    POINT AT BASELINE ROAD WITH RUNOFF FROM SUB-BASIN CD3C
 724            HC        3
                * DDM   ***** Updated *****

 725            KK    A67AC
 726            KM    SUB-BASIN A67AC
 727            KM    24-HOUR SCS TYPE II RAINFALL WAS USED TO FIND TC & R FOR THIS BASIN
 728            KM    THIS BASIN USED RAINFALL REDUCTION FACTOR OF  .934
 729            KM      L = 1.65  Kb = .042  Adj. Slope =    7.0
 730            BA     .618
 731            LG     .250    .250   5.100    .320  34.000
1                                           HEC-1 INPUT                                        PAGE 22

 LINE           ID.......1.......2.......3.......4.......5.......6.......7.......8.......9......10

 732            UC    1.500   1.140
 733            UA        0       5      16      30      65      77      84      90      94      97
 734            UA      100
                *
                * DDM   ***** Preserved *****

 735            KK    A67AR
 736            KM    DIVERT RETENTION VOLUME
 737            DT    RET67A    38.4
 738            DI        0    1000   10000
 739            DQ        0    1000   10000
                *
                * DDM   ***** Preserved *****

 740            KK    RCD4C1
 741            KM    ROUTE FLOW FROM SUB-BASIN 67AC NORTH TO RIVER
 742            KM    CROSS-SECTION REVISED TO REFLECT URBANIZED CONDITIONS
 743            RS        2    ELEV      -1
 744            RC    0.035   0.035   0.035    4200  0.0015
 745            RX        0      40      60      85      95     120     140     160
 746            RY     1000    1000    1000     995     995    1000    1000    1000
                *
 747            ZZ
1
       SCHEMATIC DIAGRAM OF STREAM NETWORK
INPUT
 LINE     (V) ROUTING         (--->) DIVERSION OR PUMP FLOW

  NO.     (.) CONNECTOR       (<---) RETURN OF DIVERTED OR PUMPED FLOW

   23      VR47C
               .
               .
   50          .------->  RET47C
   47      VR47R
               V
               V
   53     RBR511
               .
               .
   60          .       AVR51C
               .            .
               .            .
   72          .            .------->  RET51C
   70          .       AVR51R
               .            V
               .            V
   75          .       RBR512
               .            .
               .            .
   82          .            .       BR51C
               .            .           .
               .            .           .
   95          .            .           .------->  RET159
   92          .            .       BR51R
               .            .           .
               .            .           .
   98      CB51C.........................
               .
               .
  102          .        DR43C
               .            .
               .            .
  114          .            .------->  RET43C
  112          .        DR43R
               .            V
               .            V
  117          .       43BASN
               .            V
               .            V
  127          .       ROA51A
               .            V
               .            V
  131          .       ROA51B
               .            .
               .            .
  136          .            .       OA51B
               .            .           .
               .            .           .
  148          .            .           .------->  RET51
  146          .            .       OA51R
               .            .           V
               .            .           V
  151          .            .      DRBASN
               .            .           .
               .            .           .
```

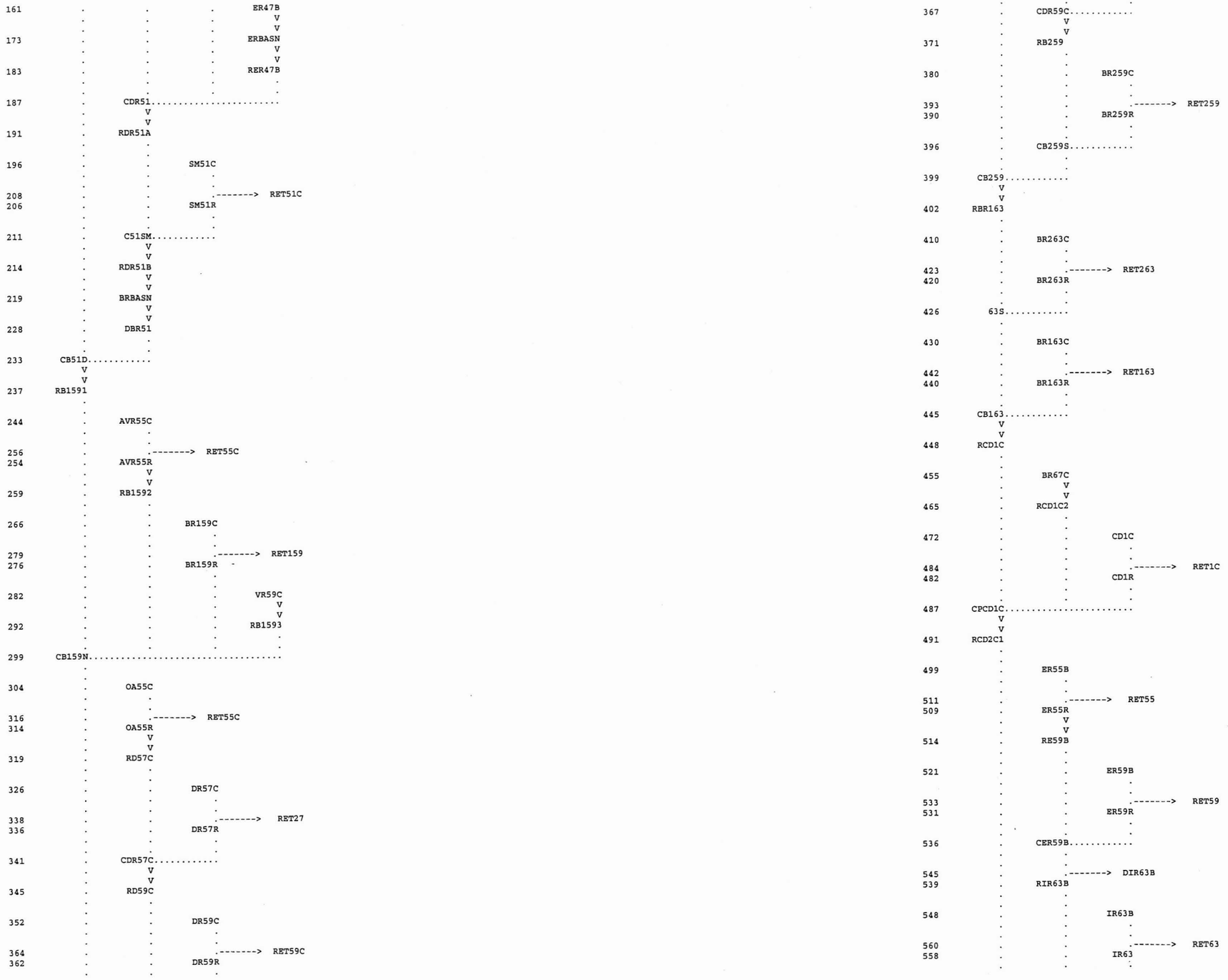
ER47B
ERBASN
RER47B
CDR51
RDR51A
SM51C
RET51C
SM51R
C51SM
RDR51B
BRBASN
DBR51
CB51D
RB1591
AVR55C
RET55C
AVR55R
RB1592
BR159C
RET159
BR159R
VR59C
RB1593
CB159N
OA55C
RET55C
OA55R
RD57C
DR57C
RET27
DR57R
CDR57C
RD59C
DR59C
RET59C
DR59R

CDR59C
RB259
BR259C
RET259
BR259R
CB259S
CB259
RBR163
BR263C
RET263
BR263R
63S
BR163C
RET163
BR163R
CB163
RCD1C
BR67C
RCD1C2
CD1C
RET1C
CD1R
CPCD1C
RCD2C1
ER55B
RET55
ER55R
RE59B
ER59B
RET59
ER59R
CER59B
DIR63B
RIR63B
IR63B
RET63
IR63

```
                .           .
563             .      CIR63C.............
                .           V
                .           V
567             .      RIR65C
                .           .
                .           .
574             .           .       IR65C
                .           .         .
                .           .         .
586             .           .         .-------->  RET65C
584             .           .       IR65R
                .           .         .
                .           .         .
589             .      CIR65C.............
                .           V
                .           V
593             .       RIRDC
                .           .
                .           .
603             .           .-------->  RIR65C
600             .      DIIRDC
                .           .
                .           .
606             .           .        IRDC
                .           .         .
                .           .         .
618             .           .         .-------->  RETRDC
616             .           .        IRDR
                .           .         .
                .           .         .
621             .       CIRDC.............
                .           V
                .           V
625             .      RIRSMC
                .           .
                .           .
632             .           .       IRSMC
                .           .         .
                .           .         .
645             .           .         .-------->  RETSMC
642             .           .       IRSMR
                .           .         .
                .           .         .
648             .      CIRSMS.............
                .           .
651             .      CIRSMC.............
                .           .
                .           .
654             .           .       CD2C
                .           .         .
                .           .         .
667             .           .         .-------->   RET2C
664             .           .       CD2R
                .           .         .
                .           .         .
670             .       CCD2C.............
                .           V
                .           V
675             .      RCD3C1
                .           .
                .           .
683             .           .       CD4C
                .           .         .
                .           .         .
695             .           .         .-------->  RETD4C
693             .           .       CD4R
                .           .         V
                .           .         V
698             .           .      RCD3C2
                .           .         .
                .           .         .
705             .           .         .       CD3C
                .           .         .         .
                .           .         .         .
718             .           .         .         .-------->  RETD3C
715             .           .         .       CD3R
                .           .         .         .
                .           .         .         .
721             .           .      CPCD3C........................
                .           .
                .           .
725             .           .       A67AC
                .           .         .
                .           .         .
737             .           .         .-------->  RET67A
735             .           .       A67AR
                .           .         V
                .           .         V
740             .           .      RCD4C1

 (***) RUNOFF ALSO COMPUTED AT THIS LOCATION
1************************************
 *                                  *
```

```
 *                                  *
 ************************************
```

```
 *   FLOOD HYDROGRAPH PACKAGE  (HEC-1)   *
 *             JUN 09 1992               *
 *           VERSION 4.0.3E              *
 *                                       *
 *  RUN DATE  10/10/01  TIME  11:06:26   *
 *                                       *
 *****************************************
```

```
 *    U.S. ARMY CORPS OF ENGINEERS       *
 *    HYDROLOGIC ENGINEERING CENTER      *
 *         609 SECOND STREET             *
 *       DAVIS, CALIFORNIA 95616         *
 *           (916) 551-1748              *
 *                                       *
 *****************************************
```

```
                    FILENAME LAVRECALT.DAT
                    LAVEEN ADMP RECOMMENDED ALTERNATIVE MODEL
                    OCTOBER 2001
                    MODIFIED BY PROJECT ENGINEERING CONSULTANTS, LTD. & HDR ENGINNEERING INC


                    LAVEEN ADMS (FINAL HEC-1) 100-YR 24-HR STORM          CBA FILE # 40916-02-30
                    HIDDEN VALLEY WATERSHED/CHAMPION DRAIN WATERSHED
                    INPUT FILE NAME  LAVFUT1A                      DATE: SEPT. 27,2000
                    24-HOUR SCS TYPE II
                   80% RETENTION VOLUME OF FUTURE RETENTION

                   RELAXED RETENTION 1/2 MILE OF MARICOPA DRAIN
                   MINUS FIRST FLUSH OF 5YR 24HR VOLUME

                   MULTIPLAN FOR ROUTING WITHIN THE CHAMPION DRAIN
                     PLAN 2: CHANNEL, S=.0020 ft/ft, n=.031, BW=14', SS=6:1, D=10', TW=124'

                   DDM MCUHP1 LAVEEN REVISED HYDROLOGY - FUTURE LANDUSE CONDITIONS

 22 IO          OUTPUT CONTROL VARIABLES
                      IPRNT          3  PRINT CONTROL
                      IPLOT          0  PLOT CONTROL
                      QSCAL          0.  HYDROGRAPH PLOT SCALE

    IT          HYDROGRAPH TIME DATA
                       NMIN          5  MINUTES IN COMPUTATION INTERVAL
                      IDATE      1   0  STARTING DATE
                      ITIME       0000  STARTING TIME
                         NQ        300  NUMBER OF HYDROGRAPH ORDINATES
                     NDDATE      2   0  ENDING DATE
                     NDTIME       0055  ENDING TIME
                     ICENT         19  CENTURY MARK
                    COMPUTATION INTERVAL     0.08 HOURS
                        TOTAL TIME BASE    24.92 HOURS

                ENGLISH UNITS
                     DRAINAGE AREA         SQUARE MILES
                     PRECIPITATION DEPTH   INCHES
                     LENGTH, ELEVATION     FEET
                     FLOW                  CUBIC FEET PER SECOND
                     STORAGE VOLUME        ACRE-FEET
                     SURFACE AREA          ACRES
                     TEMPERATURE           DEGREES FAHRENHEIT


*** *** *** *** *** *** *** *** *** *** *** *** *** *** *** *** *** *** *** *** *** *** *** *** *** *** *** *** *** *** *** *** *** *** ***

                   **************
                   *            *
 23 KK             *     VR47C  *
                   *            *
                   **************
                              SUB-BASIN VR47C
                              24-HOUR SCS TYPE II RAINFALL WAS USED TO FIND TC & R FOR THIS BASIN
                              THIS BASIN USED RAINFALL REDUCTION FACTOR OF  .934
                                L = 1.65  Kb = .042  Adj. Slope =    7.0
                              RAINFALL DEPTH OF 4.20 WAS SPACIALLY REDUCED AS SHOWN BY THE PB RECORD
                              THE FOLLOWING PC RECORD USED A 24-HR SCS TYPE II STORM

 29 IN                    TIME DATA FOR INPUT TIME SERIES
                           JXMIN          15  TIME INTERVAL IN MINUTES
                          JXDATE      1   0  STARTING DATE
                          JXTIME          0  STARTING TIME

                        SUBBASIN RUNOFF DATA

 28 BA                    SUBBASIN CHARACTERISTICS
                               TAREA        0.87  SUBBASIN AREA

                          PRECIPITATION DATA

 32 PB                         STORM        3.92  BASIN TOTAL PRECIPITATION

 32 PI                      INCREMENTAL PRECIPITATION PATTERN
                              0.00      0.00      0.00      0.00      0.00      0.00      0.00      0.00      0.00      0.00
                              0.00      0.00      0.00      0.00      0.00      0.00      0.00      0.00      0.00      0.00
                              0.00      0.00      0.00      0.00      0.00      0.00      0.00      0.00      0.00      0.00
                              0.00      0.00      0.00      0.00      0.00      0.00      0.00      0.00      0.00      0.00
```

```
   0.00      0.00      0.00      0.00      0.00      0.00      0.00      0.00      0.00      0.00
   0.00      0.00      0.00      0.00      0.00      0.00      0.00      0.00      0.00      0.00
   0.00      0.00      0.00      0.00      0.00      0.00      0.00      0.00      0.00      0.00
   0.00      0.00      0.00      0.00      0.00      0.00      0.00      0.00      0.00      0.00
   0.00      0.00      0.00      0.00      0.00      0.00      0.00      0.00      0.00      0.00
   0.00      0.00      0.00      0.00      0.00      0.00      0.00      0.00      0.00      0.00
   0.00      0.00      0.00      0.00      0.00      0.00      0.00      0.00      0.00      0.00
   0.00      0.00      0.00      0.00      0.00      0.00      0.00      0.00      0.00      0.00
   0.00      0.00      0.00      0.00      0.00      0.00      0.00      0.01      0.00      0.01
   0.01      0.01      0.01      0.01      0.01      0.01      0.01      0.01      0.03      0.03
   0.03      0.09      0.09      0.09      0.01      0.01      0.01      0.01      0.01      0.01
   0.01      0.01      0.01      0.01      0.01      0.01      0.00      0.00      0.00      0.00
   0.00      0.00      0.00      0.00      0.00      0.00      0.00      0.00      0.00      0.00
   0.00      0.00      0.00      0.00      0.00      0.00      0.00      0.00      0.00      0.00
   0.00      0.00      0.00      0.00      0.00      0.00      0.00      0.00      0.00      0.00
   0.00      0.00      0.00      0.00      0.00      0.00      0.00      0.00      0.00      0.00
   0.00      0.00      0.00      0.00      0.00      0.00      0.00      0.00      0.00      0.00
   0.00      0.00      0.00      0.00      0.00      0.00      0.00      0.00      0.00      0.00
   0.00      0.00      0.00      0.00      0.00      0.00      0.00      0.00      0.00      0.00
   0.00      0.00      0.00      0.00      0.00      0.00      0.00      0.00      0.00      0.00
   0.00      0.00      0.00      0.00      0.00      0.00      0.00      0.00      0.00      0.00
   0.00      0.00      0.00      0.00      0.00      0.00      0.00      0.00      0.00      0.00
   0.00      0.00      0.00      0.00      0.00      0.00      0.00      0.00      0.00      0.00
   0.00      0.00      0.00      0.00      0.00      0.00      0.00      0.00      0.00      0.00
   0.00      0.00      0.00      0.00      0.00      0.00      0.00      0.00

43 LG        GREEN AND AMPT LOSS RATE
                   STRTL       0.26  STARTING LOSS
                     DTH       0.25  MOISTURE DEFICIT
                    PSIF       5.70  WETTING FRONT SUCTION
                   XKSAT       0.25  HYDRAULIC CONDUCTIVITY
                   RTIMP      27.00  PERCENT IMPERVIOUS AREA

44 UC        CLARK UNITGRAPH
                      TC       1.50  TIME OF CONCENTRATION
                       R       0.94  STORAGE COEFFICIENT

45 UA        ACCUMULATED-AREA VS. TIME,  11 ORDINATES
                0.0       5.0      16.0      30.0      65.0      77.0      84.0      90.0      94.0      97.0
              100.0

                                                   ***

                                     UNIT HYDROGRAPH PARAMETERS
                              CLARK    TC=  1.50 HR,         R=  0.94 HR
                             SNYDER    TP=  0.78 HR,        CP=  0.46

                                          UNIT HYDROGRAPH
                                     68 END-OF-PERIOD ORDINATES
         8.       25.       50.       83.      118.      172.      255.      316.      334.      336.
       329.      322.      312.      300.      287.      272.      259.      246.      230.      210.
       193.      176.      161.      148.      135.      123.      113.      103.       95.       87.
        79.       72.       66.       61.       55.       51.       46.       42.       39.       36.
        33.       30.       27.       25.       23.       21.       19.       17.       16.       15.
        13.       12.       11.     - 10.        9.        9.        8.        7.        7.        6.
         5.        5.        5.        4.        4.        4.        3.        3.

    ***          ***          ***          ***          ***

                    HYDROGRAPH AT STATION    VR47C

   TOTAL RAINFALL =    3.92, TOTAL LOSS =    1.97, TOTAL EXCESS =    1.95

  PEAK FLOW      TIME                    MAXIMUM AVERAGE FLOW
                                     6-HR        24-HR        72-HR     24.92-HR
+   (CFS)        (HR)
                             (CFS)
+     460.      12.67                 152.         45.          44.          44.
                          (INCHES)   1.622       1.935        1.936        1.936
                           (AC-FT)     75.         90.          90.          90.

                          CUMULATIVE AREA =     0.87 SQ MI


*** *** *** *** *** *** *** *** *** *** *** *** *** *** *** *** *** *** *** *** *** *** *** *** *** *** *** *** *** *** *** *** *** ***

             **************
             *            *
47 KK        *    VR47R   *
             *            *
             **************
                         DIVERT RETENTION VOLUME
                         RELAXED RETENTION VOLUME FROM 72.8 AC-FT

DT           DIVERSION
                   ISTAD     RET47C  DIVERSION HYDROGRAPH IDENTIFICATION
                  DSTRMX      67.70  MAXIMUM VOLUME TO BE DIVERTED

DI                INFLOW       0.00   1000.00  10000.00

DQ         DIVERTED FLOW       0.00   1000.00  10000.00
```

```
                                                   ***

    ***          ***          ***          ***          ***

                    DIVERSION HYDROGRAPH    RET47C

  PEAK FLOW      TIME                    MAXIMUM AVERAGE FLOW
                                     6-HR        24-HR        72-HR     24.92-HR
+   (CFS)        (HR)
                             (CFS)
+     460.      12.67                 127.         34.          33.          33.
                          (INCHES)   1.360       1.461        1.461        1.461
                           (AC-FT)     63.         68.          68.          68.

                          CUMULATIVE AREA =     0.87 SQ MI

    ***          ***          ***          ***          ***

                    HYDROGRAPH AT STATION    VR47R

  PEAK FLOW      TIME                    MAXIMUM AVERAGE FLOW
                                     6-HR        24-HR        72-HR     24.92-HR
+   (CFS)        (HR)
                             (CFS)
+     157.      14.25                  38.         11.          11.          11.
                          (INCHES)   0.410       0.475        0.475        0.475
                           (AC-FT)     19.         22.          22.          22.

                          CUMULATIVE AREA =     0.87 SQ MI


*** *** *** *** *** *** *** *** *** *** *** *** *** *** *** *** *** *** *** *** *** *** *** *** *** *** *** *** *** *** *** *** *** ***

             **************
             *            *
53 KK        *   RBR511   *
             *            *
             **************
                         ROUTE FLOW FROM COMPUTATION POINT CVR47C TO COMPUTATION POINT CB51C
                         MARICOPA DRAIN - 47TH AVE. TO 51ST AVE.

              HYDROGRAPH ROUTING DATA

56 RS           STORAGE ROUTING
                     NSTPS          2  NUMBER OF SUBREACHES
                      ITYP       ELEV  TYPE OF INITIAL CONDITION
                    RSVRIC      -1.00  INITIAL CONDITION
                         X       0.00 WORKING R AND D COEFFICIENT

57 RC           NORMAL DEPTH CHANNEL
                       ANL      0.030  LEFT OVERBANK N-VALUE
                      ANCH      0.030  MAIN CHANNEL N-VALUE
                       ANR      0.030  RIGHT OVERBANK N-VALUE
                     RLNTH      3200.  REACH LENGTH
                       SEL     0.0011  ENERGY SLOPE
                     ELMAX        0.0  MAX. ELEV. FOR STORAGE/OUTFLOW CALCULATION

                                             CROSS-SECTION DATA
                           --- LEFT OVERBANK --- + ------ MAIN CHANNEL ------- + --- RIGHT OVERBANK ---
59 RY        ELEVATION  1008.20   1008.10   1008.00   1003.00   1003.00   1008.00   1008.10   1008.20
58 RX         DISTANCE     0.00     10.00     20.00     45.00    115.00    140.00    150.00    160.00

                                                   ***

                                    COMPUTED STORAGE-OUTFLOW-ELEVATION DATA

         STORAGE      0.00      1.43      2.92      4.47      6.07      7.72      9.43     11.20     13.02     14.89
         OUTFLOW      0.00     13.39     42.78     84.66    137.73    201.26    274.81    358.09    450.92    553.18
       ELEVATION   1003.00   1003.27   1003.55   1003.82   1004.09   1004.37   1004.64   1004.92   1005.19   1005.46

         STORAGE     16.82     18.81     20.85     22.95     25.10     27.30     29.56     31.88     34.25     36.95
         OUTFLOW    664.80    785.74    916.01   1055.61   1204.58   1362.96   1530.81   1708.20   1895.20   2115.33
       ELEVATION   1005.74   1006.01   1006.28   1006.56   1006.83   1007.11   1007.38   1007.65   1007.93   1008.20

    ***          ***          ***          ***          ***

                    HYDROGRAPH AT STATION   RBR511

  PEAK FLOW      TIME                    MAXIMUM AVERAGE FLOW
                                     6-HR        24-HR        72-HR     24.92-HR
+   (CFS)        (HR)
                             (CFS)
+      97.      14.92                  36.         11.          10.          10.
                          (INCHES)   0.388       0.460        0.460        0.460
                           (AC-FT)     18.         21.          21.          21.

 PEAK STORAGE    TIME                    MAXIMUM AVERAGE STORAGE
                                     6-HR        24-HR        72-HR     24.92-HR
+  (AC-FT)       (HR)
        2.      14.92                   1.          0.           0.           0.
```

```
  PEAK STAGE    TIME                              MAXIMUM AVERAGE STAGE
                                         6-HR        24-HR        72-HR     24.92-HR
+  (FEET)        (HR)
   1003.89      14.92              1003.46      1003.15      1003.14      1003.14

                         CUMULATIVE AREA =    0.87 SQ MI
```

```
*** *** *** *** *** *** *** *** *** *** *** *** *** *** *** *** *** *** *** *** *** *** *** *** *** *** *** *** *** *** *** *** *** ***

             **************
             *            *
   60 KK     *   AVR51C   *
             *            *
             **************
                         SUB-BASIN AVR51C
                         24-HOUR SCS TYPE II RAINFALL WAS USED TO FIND TC & R FOR THIS BASIN
                         THIS BASIN USED RAINFALL REDUCTION FACTOR OF  .934
                           L =  .86  Kb = .049  Adj. Slope =   10.0

            SUBBASIN RUNOFF DATA

   65 BA        SUBBASIN CHARACTERISTICS
                      TAREA        0.28  SUBBASIN AREA

                PRECIPITATION DATA

   32 PB              STORM        3.92  BASIN TOTAL PRECIPITATION

   32 PI          INCREMENTAL PRECIPITATION PATTERN
                     0.00      0.00      0.00      0.00      0.00      0.00      0.00      0.00      0.00      0.00
                     0.00      0.00      0.00      0.00      0.00      0.00      0.00      0.00      0.00      0.00
                     0.00      0.00      0.00      0.00      0.00      0.00      0.00      0.00      0.00      0.00
                     0.00      0.00      0.00      0.00      0.00      0.00      0.00      0.00      0.00      0.00
                     0.00      0.00      0.00      0.00      0.00      0.00      0.00      0.00      0.00      0.00
                     0.00      0.00      0.00      0.00      0.00      0.00      0.00      0.00      0.00      0.00
                     0.00      0.00      0.00      0.00      0.00      0.00      0.00      0.00      0.00      0.00
                     0.00      0.00      0.00      0.00      0.00      0.00      0.00      0.00      0.00      0.00
                     0.00      0.00      0.00      0.00      0.00      0.00      0.00      0.00      0.00      0.00
                     0.00      0.00      0.00      0.00      0.00      0.00      0.00      0.00      0.00      0.00
                     0.00      0.00      0.00      0.00      0.00      0.00      0.00      0.00      0.00      0.00
                     0.00      0.00      0.00      0.00      0.00      0.00      0.00      0.00      0.00      0.00
                     0.00      0.00      0.00      0.00      0.00      0.00      0.00      0.01      0.00      0.01
                     0.01      0.01      0.01      0.01      0.01      0.01      0.01      0.01      0.03      0.03
                     0.03      0.09      0.09      0.09      0.01      0.01      0.01      0.01      0.01      0.01
                     0.01      0.01      0.01      0.01      0.01      0.01      0.00      0.00      0.00      0.00
                     0.00      0.00      0.00      0.00      0.00      0.00      0.00      0.00      0.00      0.00
                     0.00      0.00      0.00      0.00      0.00      0.00      0.00      0.00      0.00      0.00
                     0.00      0.00      0.00      0.00      0.00      0.00      0.00      0.00      0.00      0.00
                     0.00      0.00      0.00      0.00      0.00      0.00      0.00      0.00      0.00      0.00
                     0.00      0.00      0.00      0.00      0.00      0.00      0.00      0.00      0.00      0.00
                     0.00      0.00      0.00      0.00      0.00      0.00      0.00      0.00      0.00      0.00
                     0.00      0.00      0.00      0.00      0.00      0.00      0.00      0.00      0.00      0.00
                     0.00      0.00      0.00      0.00      0.00      0.00      0.00      0.00      0.00      0.00
                     0.00      0.00      0.00      0.00      0.00      0.00      0.00      0.00      0.00      0.00
                     0.00      0.00      0.00      0.00      0.00      0.00      0.00      0.00      0.00      0.00
                     0.00      0.00      0.00      0.00      0.00      0.00      0.00      0.00      0.00      0.00
                     0.00      0.00      0.00      0.00      0.00      0.00      0.00      0.00      0.00      0.00
                     0.00      0.00      0.00      0.00      0.00      0.00      0.00      0.00

   66 LG        GREEN AND AMPT LOSS RATE
                      STRTL        0.25  STARTING LOSS
                        DTH        0.19  MOISTURE DEFICIT
                       PSIF        6.60  WETTING FRONT SUCTION
                      XKSAT        0.17  HYDRAULIC CONDUCTIVITY
                      RTIMP       30.00  PERCENT IMPERVIOUS AREA

   67 UC        CLARK UNITGRAPH
                         TC        0.83  TIME OF CONCENTRATION
                          R        0.55  STORAGE COEFFICIENT

   68 UA        ACCUMULATED-AREA VS. TIME,  11 ORDINATES
                   0.0       5.0      16.0      30.0      65.0      77.0      84.0      90.0      94.0      97.0
                 100.0

                                                   ***

                                          UNIT HYDROGRAPH PARAMETERS
                                    CLARK    TC=  0.83 HR,        R=  0.55 HR
                                    SNYDER   TP=  0.43 HR,       CP=  0.45

                                                UNIT HYDROGRAPH
                                            39 END-OF-PERIOD ORDINATES
            8.       32.       68.      135.      189.      192.      185.      174.      160.      147.
          130.      112.       96.       82.       71.       61.       52.       45.       38.       33.
           28.       24.       21.       18.       15.       13.       11.       10.        8.        7.
            6.        5.        4.        4.        3.        3.        2.        2.        2.

    ***         ***         ***         ***         ***

                     HYDROGRAPH AT STATION    AVR51C
```

```
        TOTAL RAINFALL =    3.92, TOTAL LOSS =    1.76, TOTAL EXCESS =    2.16

     PEAK FLOW     TIME                              MAXIMUM AVERAGE FLOW
                                            6-HR        24-HR        72-HR     24.92-HR
+    (CFS)        (HR)
                                 (CFS)
+     261.       12.33                       55.          16.          16.          16.
                             (INCHES)      1.806        2.145        2.147        2.147
                              (AC-FT)        27.          33.          33.          33.

                             CUMULATIVE AREA =    0.28 SQ MI

*** *** *** *** *** *** *** *** *** *** *** *** *** *** *** *** *** *** *** *** *** *** *** *** *** *** *** *** *** *** *** *** *** ***

               **************
               *            *
     70 KK     *   AVR51R   *
               *            *
               **************
                               DIVERT RETENTION VOLUME

       DT           DIVERSION
                         ISTAD      RET51C  DIVERSION HYDROGRAPH IDENTIFICATION
                        DSTRMX       21.60  MAXIMUM VOLUME TO BE DIVERTED

       DI              INFLOW        0.00   1000.00  10000.00

       DQ       DIVERTED FLOW        0.00   1000.00  10000.00
                                                           ***

         ***          ***          ***          ***          ***

                              DIVERSION HYDROGRAPH   RET51C

     PEAK FLOW     TIME                              MAXIMUM AVERAGE FLOW
                                            6-HR        24-HR        72-HR     24.92-HR
+    (CFS)        (HR)
                                 (CFS)
+     261.       12.33                       41.          11.          10.          10.
                             (INCHES)      1.323        1.421        1.421        1.421
                              (AC-FT)        20.          22.          22.          22.

                             CUMULATIVE AREA =    0.28 SQ MI

         ***          ***          ***          ***          ***

                              HYDROGRAPH AT STATION    AVR51R

     PEAK FLOW     TIME                              MAXIMUM AVERAGE FLOW
                                            6-HR        24-HR        72-HR     24.92-HR
+    (CFS)        (HR)
                                 (CFS)
+     133.       13.00                       19.           6.           5.           5.
                             (INCHES)      0.636        0.726        0.726        0.726
                              (AC-FT)        10.          11.          11.          11.

                             CUMULATIVE AREA =    0.28 SQ MI

*** *** *** *** *** *** *** *** *** *** *** *** *** *** *** *** *** *** *** *** *** *** *** *** *** *** *** *** *** *** *** *** *** ***

               **************
               *            *
     75 KK     *   RBR512   *
               *            *
               **************
                                ROUTE FLOW FROM SUB-BASIN AVR51C TO COMPUTATION POINT CB51C
                                ROUTING REVISED TO REFLECT AN URBANIZED CONDITION

                  HYDROGRAPH ROUTING DATA

     78 RS          STORAGE ROUTING
                         NSTPS           4  NUMBER OF SUBREACHES
                          ITYP        ELEV  TYPE OF INITIAL CONDITION
                        RSVRIC       -1.00  INITIAL CONDITION
                             X        0.00  WORKING R AND D COEFFICIENT

     79 RC          NORMAL DEPTH CHANNEL
                           ANL       0.035  LEFT OVERBANK N-VALUE
                          ANCH       0.035  MAIN CHANNEL N-VALUE
                           ANR       0.035  RIGHT OVERBANK N-VALUE
                         RLNTH       3600.  REACH LENGTH
                           SEL      0.0010  ENERGY SLOPE
                         ELMAX      1010.5  MAX. ELEV. FOR STORAGE/OUTFLOW CALCULATION
```

CROSS-SECTION DATA

		--- LEFT OVERBANK ---	+	------	MAIN CHANNEL	------- +	---	RIGHT OVERBANK ---	
81 RY	ELEVATION	1010.50	1009.70	1009.00	1006.00	1006.00	1009.00	1009.70	1010.50
80 RX	DISTANCE	0.00	20.00	40.00	46.00	56.00	62.00	82.00	102.00

***

COMPUTED STORAGE-OUTFLOW-ELEVATION DATA

STORAGE	0.00	0.20	0.43	0.67	0.93	1.21	1.51	1.82	2.16	2.51
OUTFLOW	0.00	1.23	3.96	7.91	12.98	19.15	26.42	34.80	44.31	54.96
ELEVATION	1006.00	1006.24	1006.47	1006.71	1006.95	1007.18	1007.42	1007.66	1007.89	1008.13
STORAGE	2.88	3.27	3.68	4.12	4.78	5.69	6.87	8.29	9.93	11.81
OUTFLOW	66.78	79.81	94.06	110.64	131.71	156.85	187.39	224.29	268.14	319.68
ELEVATION	1008.37	1008.60	1008.84	1009.08	1009.32	1009.55	1009.79	1010.03	1010.26	1010.50

*** *** *** *** ***

HYDROGRAPH AT STATION RBR512

PEAK FLOW	TIME		MAXIMUM AVERAGE FLOW			
			6-HR	24-HR	72-HR	24.92-HR
+ (CFS)	(HR)					
		(CFS)				
+ 82.	13.58		19.	5.	5.	5.
		(INCHES)	0.614	0.710	0.710	0.710
		(AC-FT)	9.	11.	11.	11.

PEAK STORAGE	TIME	MAXIMUM AVERAGE STORAGE			
		6-HR	24-HR	72-HR	24.92-HR
+ (AC-FT)	(HR)				
1.	13.58	0.	0.	0.	0.

PEAK STAGE	TIME	MAXIMUM AVERAGE STAGE			
		6-HR	24-HR	72-HR	24.92-HR
+ (FEET)	(HR)				
1008.64	13.58	1007.01	1006.35	1006.33	1006.33

CUMULATIVE AREA = 0.28 SQ MI

*** ***

****
*   *
82 KK   *   BR51C   *
*   *
****

SUB-BASIN BR51C
24-HOUR SCS TYPE II RAINFALL WAS USED TO FIND TC & R FOR THIS BASIN
THIS BASIN USED RAINFALL REDUCTION FACTOR OF .934
L = 1.21 Kb = .043 Adj. Slope = 6.0

SUBBASIN RUNOFF DATA

87 BA   SUBBASIN CHARACTERISTICS
TAREA   0.70   SUBBASIN AREA

PRECIPITATION DATA

32 PB   STORM   3.92   BASIN TOTAL PRECIPITATION

32 PI   INCREMENTAL PRECIPITATION PATTERN

0.00	0.00	0.00	0.00	0.00	0.00	0.00	0.00	0.00	0.00
0.00	0.00	0.00	0.00	0.00	0.00	0.00	0.00	0.00	0.00
0.00	0.00	0.00	0.00	0.00	0.00	0.00	0.00	0.00	0.00
0.00	0.00	0.00	0.00	0.00	0.00	0.00	0.00	0.00	0.00
0.00	0.00	0.00	0.00	0.00	0.00	0.00	0.00	0.00	0.00
0.00	0.00	0.00	0.00	0.00	0.00	0.00	0.00	0.00	0.00
0.00	0.00	0.00	0.00	0.00	0.00	0.00	0.00	0.00	0.00
0.00	0.00	0.00	0.00	0.00	0.00	0.00	0.00	0.00	0.00
0.00	0.00	0.00	0.00	0.00	0.00	0.00	0.00	0.00	0.00
0.00	0.00	0.00	0.00	0.00	0.00	0.00	0.00	0.00	0.00
0.00	0.00	0.00	0.00	0.00	0.00	0.00	0.00	0.00	0.00
0.00	0.00	0.00	0.00	0.00	0.00	0.00	0.00	0.00	0.00
0.00	0.00	0.00	0.00	0.00	0.00	0.00	0.01	0.00	0.01
0.01	0.01	0.01	0.01	0.01	0.01	0.01	0.01	0.03	0.03
0.03	0.09	0.09	0.09	0.01	0.01	0.01	0.01	0.01	0.01
0.01	0.01	0.01	0.01	0.01	0.01	0.00	0.00	0.00	0.00
0.00	0.00	0.00	0.00	0.00	0.00	0.00	0.00	0.00	0.00
0.00	0.00	0.00	0.00	0.00	0.00	0.00	0.00	0.00	0.00
0.00	0.00	0.00	0.00	0.00	0.00	0.00	0.00	0.00	0.00
0.00	0.00	0.00	0.00	0.00	0.00	0.00	0.00	0.00	0.00
0.00	0.00	0.00	0.00	0.00	0.00	0.00	0.00	0.00	0.00
0.00	0.00	0.00	0.00	0.00	0.00	0.00	0.00	0.00	0.00
0.00	0.00	0.00	0.00	0.00	0.00	0.00	0.00	0.00	0.00
0.00	0.00	0.00	0.00	0.00	0.00	0.00	0.00	0.00	0.00
0.00	0.00	0.00	0.00	0.00	0.00	0.00	0.00	0.00	0.00
0.00	0.00	0.00	0.00	0.00	0.00	0.00	0.00	0.00	0.00
0.00	0.00	0.00	0.00	0.00	0.00	0.00	0.00	0.00	0.00
0.00	0.00	0.00	0.00	0.00	0.00	0.00	0.00	0.00	0.00
0.00	0.00	0.00	0.00	0.00	0.00	0.00	0.00		

88 LG   GREEN AND AMPT LOSS RATE

STRTL	0.25	STARTING LOSS
DTH	0.25	MOISTURE DEFICIT
PSIF	4.90	WETTING FRONT SUCTION
XKSAT	0.35	HYDRAULIC CONDUCTIVITY
RTIMP	31.00	PERCENT IMPERVIOUS AREA

89 UC   CLARK UNITGRAPH

TC	1.33	TIME OF CONCENTRATION
R	0.72	STORAGE COEFFICIENT

90 UA   ACCUMULATED-AREA VS. TIME, 11 ORDINATES

0.0	5.0	16.0	30.0	65.0	77.0	84.0	90.0	94.0	97.0
100.0									

***

UNIT HYDROGRAPH PARAMETERS
CLARK TC= 1.33 HR, R= 0.72 HR
SNYDER TP= 0.67 HR, CP= 0.49

UNIT HYDROGRAPH
53 END-OF-PERIOD ORDINATES

9.	31.	62.	101.	150.	234.	311.	336.	334.	323.
311.	296.	279.	261.	243.	228.	208.	185.	165.	147.
131.	117.	104.	93.	82.	73.	65.	58.	52.	46.
41.	37.	33.	29.	26.	23.	21.	18.	16.	15.
13.	12.	10.	9.	8.	7.	6.	6.	5.	5.
4.	4.	3.							

*** *** *** *** ***

HYDROGRAPH AT STATION BR51C

TOTAL RAINFALL = 3.92, TOTAL LOSS = 1.94, TOTAL EXCESS = 1.99

PEAK FLOW	TIME		MAXIMUM AVERAGE FLOW			
			6-HR	24-HR	72-HR	24.92-HR
+ (CFS)	(HR)					
		(CFS)				
+ 432.	12.58		122.	37.	36.	36.
		(INCHES)	1.618	1.969	1.970	1.970
		(AC-FT)	60.	73.	73.	73.

CUMULATIVE AREA = 0.70 SQ MI

*** ***

****
*   *
92 KK   *   BR51R   *
*   *
****

DIVERT RETENTION VOLUME
RELAXED RETENTION VOLUME FROM 53.6 AC-FT

DT   DIVERSION

ISTAD	RET159	DIVERSION HYDROGRAPH IDENTIFICATION
DSTRMX	50.50	MAXIMUM VOLUME TO BE DIVERTED

DI	INFLOW	0.00	1000.00	10000.00
DQ	DIVERTED FLOW	0.00	1000.00	10000.00

***

*** *** *** *** ***

DIVERSION HYDROGRAPH RET159

PEAK FLOW	TIME		MAXIMUM AVERAGE FLOW			
			6-HR	24-HR	72-HR	24.92-HR
+ (CFS)	(HR)					
		(CFS)				
+ 432.	12.58		94.	25.	25.	25.
		(INCHES)	1.248	1.355	1.355	1.355
		(AC-FT)	47.	51.	51.	51.

CUMULATIVE AREA = 0.70 SQ MI

*** *** *** *** ***

HYDROGRAPH AT STATION BR51R

PEAK FLOW	TIME	MAXIMUM AVERAGE FLOW			
		6-HR	24-HR	72-HR	24.92-HR
+ (CFS)	(HR)				

PEAK FLOW	TIME		6-HR	24-HR	72-HR	24.92-HR
		(CFS)				
+ 196.	13.58		40.	12.	11.	11.
		(INCHES)	0.530	0.615	0.615	0.615
		(AC-FT)	20.	23.	23.	23.

CUMULATIVE AREA = 0.70 SQ MI

*** ***

98 KK * CB51C *

COMBINE ROUTED FLOW FROM COMPUTATION POINT CVR47C AND SUB-BASIN AVR51C
WITH RUNOFF FROM SUB-BASIN BR51C

101 HC HYDROGRAPH COMBINATION
ICOMP 3 NUMBER OF HYDROGRAPHS TO COMBINE

***

MANE2 NPLAN,NSTM 1 0
MANE2 NPLAN,NSTM 1 0

*** *** *** *** ***

HYDROGRAPH AT STATION CB51C

PEAK FLOW	TIME		MAXIMUM AVERAGE FLOW 6-HR	24-HR	72-HR	24.92-HR
+ (CFS)	(HR)					
		(CFS)				
+ 278.	13.58		92.	28.	27.	27.
		(INCHES)	0.464	0.557	0.557	0.557
		(AC-FT)	46.	55.	55.	55.

CUMULATIVE AREA = 1.85 SQ MI

*** ***

102 KK * DR43C *

SUB-BASIN DR43C
24-HOUR SCS TYPE II RAINFALL WAS USED TO FIND TC & R FOR THIS BASIN
THIS BASIN USED RAINFALL REDUCTION FACTOR OF .934
L = 1.49 Kb = .039 Adj. Slope = 69.0

SUBBASIN RUNOFF DATA

107 BA SUBBASIN CHARACTERISTICS
TAREA 0.92 SUBBASIN AREA

PRECIPITATION DATA

32 PB STORM 3.92 BASIN TOTAL PRECIPITATION

32 PI INCREMENTAL PRECIPITATION PATTERN

0.00	0.00	0.00	0.00	0.00	0.00	0.00	0.00	0.00	0.00
0.00	0.00	0.00	0.00	0.00	0.00	0.00	0.00	0.00	0.00
0.00	0.00	0.00	0.00	0.00	0.00	0.00	0.00	0.00	0.00
0.00	0.00	0.00	0.00	0.00	0.00	0.00	0.00	0.00	0.00
0.00	0.00	0.00	0.00	0.00	0.00	0.00	0.00	0.00	0.00
0.00	0.00	0.00	0.00	0.00	0.00	0.00	0.00	0.00	0.00
0.00	0.00	0.00	0.00	0.00	0.00	0.00	0.00	0.00	0.00
0.00	0.00	0.00	0.00	0.00	0.00	0.00	0.00	0.00	0.00
0.00	0.00	0.00	0.00	0.00	0.00	0.00	0.00	0.00	0.00
0.00	0.00	0.00	0.00	0.00	0.00	0.00	0.00	0.00	0.00
0.00	0.00	0.00	0.00	0.00	0.00	0.00	0.00	0.00	0.00
0.00	0.00	0.00	0.00	0.00	0.00	0.00	0.00	0.00	0.00
0.00	0.00	0.00	0.00	0.00	0.00	0.00	0.01	0.00	0.01
0.01	0.01	0.01	0.01	0.01	0.01	0.01	0.01	0.03	0.03
0.03	0.09	0.09	0.09	0.01	0.01	0.01	0.01	0.01	0.01
0.01	0.01	0.01	0.01	0.01	0.01	0.00	0.00	0.00	0.00
0.00	0.00	0.00	0.00	0.00	0.00	0.00	0.00	0.00	0.00
0.00	0.00	0.00	0.00	0.00	0.00	0.00	0.00	0.00	0.00
0.00	0.00	0.00	0.00	0.00	0.00	0.00	0.00	0.00	0.00
0.00	0.00	0.00	0.00	0.00	0.00	0.00	0.00	0.00	0.00
0.00	0.00	0.00	0.00	0.00	0.00	0.00	0.00	0.00	0.00
0.00	0.00	0.00	0.00	0.00	0.00	0.00	0.00	0.00	0.00
0.00	0.00	0.00	0.00	0.00	0.00	0.00	0.00	0.00	0.00
0.00	0.00	0.00	0.00	0.00	0.00	0.00	0.00	0.00	0.00
0.00	0.00	0.00	0.00	0.00	0.00	0.00	0.00	0.00	0.00
0.00	0.00	0.00	0.00	0.00	0.00	0.00	0.00	0.00	0.00
0.00	0.00	0.00	0.00	0.00	0.00	0.00	0.00	0.00	0.00
0.00	0.00	0.00	0.00	0.00	0.00	0.00	0.00	0.00	0.00
0.00	0.00	0.00	0.00	0.00	0.00	0.00	0.00		

108 LG GREEN AND AMPT LOSS RATE
STRTL 0.25 STARTING LOSS
DTH 0.25 MOISTURE DEFICIT
PSIF 5.10 WETTING FRONT SUCTION
XKSAT 0.30 HYDRAULIC CONDUCTIVITY
RTIMP 38.00 PERCENT IMPERVIOUS AREA

109 UC CLARK UNITGRAPH
TC 0.45 TIME OF CONCENTRATION
R 0.22 STORAGE COEFFICIENT

110 UA ACCUMULATED-AREA VS. TIME, 11 ORDINATES

0.0	5.0	16.0	30.0	65.0	77.0	84.0	90.0	94.0	97.0
100.0									

***

UNIT HYDROGRAPH PARAMETERS
CLARK TC= 0.45 HR, R= 0.22 HR
SNYDER TP= 0.24 HR, CP= 0.54

UNIT HYDROGRAPH
17 END-OF-PERIOD ORDINATES

163.	732.	1255.	1276.	1062.	819.	583.	398.	271.	185.
126.	86.	58.	40.	27.	19.	13.			

*** *** *** *** ***

HYDROGRAPH AT STATION DR43C

TOTAL RAINFALL = 3.92, TOTAL LOSS = 1.70, TOTAL EXCESS = 2.22

PEAK FLOW	TIME		MAXIMUM AVERAGE FLOW 6-HR	24-HR	72-HR	24.92-HR
+ (CFS)	(HR)					
		(CFS)				
+ 1391.	12.17		176.	55.	53.	53.
		(INCHES)	1.779	2.209	2.212	2.212
		(AC-FT)	87.	109.	109.	109.

CUMULATIVE AREA = 0.92 SQ MI

*** ***

112 KK * DR43R *

DIVERT RETENTION VOLUME

DT DIVERSION
ISTAD RET43C DIVERSION HYDROGRAPH IDENTIFICATION
DSTRMX 27.90 MAXIMUM VOLUME TO BE DIVERTED

DI INFLOW 0.00 1000.00 10000.00

DQ DIVERTED FLOW 0.00 1000.00 10000.00

***

*** *** *** *** ***

DIVERSION HYDROGRAPH RET43C

PEAK FLOW	TIME		MAXIMUM AVERAGE FLOW 6-HR	24-HR	72-HR	24.92-HR
+ (CFS)	(HR)					
		(CFS)				
+ 451.	11.92		45.	14.	14.	14.
		(INCHES)	0.458	0.567	0.567	0.567
		(AC-FT)	23.	28.	28.	28.

CUMULATIVE AREA = 0.92 SQ MI

*** *** *** *** ***

HYDROGRAPH AT STATION DR43R

PEAK FLOW	TIME		MAXIMUM AVERAGE FLOW 6-HR	24-HR	72-HR	24.92-HR
+ (CFS)	(HR)					
		(CFS)				
+ 1391.	12.17		150.	41.	39.	39.
		(INCHES)	1.513	1.644	1.644	1.644
		(AC-FT)	74.	81.	81.	81.

```
                    CUMULATIVE AREA =    0.92 SQ MI

*** *** *** *** *** *** *** *** *** *** *** *** *** *** *** *** *** *** *** *** *** *** *** *** *** *** *** *** *** *** *** *** ***

           *************
           *           *
117 KK     *   43BASN  *
           *           *
           *************
                    ********************PROPOSED BASIN IN SUB-BASIN DR43C*******************
                    DETENTION BASIN AT THE DOBBINS AND 43TH AVE INTERSECTION.
                    THIS IS A BASIN ADDED FOR THE ADMP ALTERNATE 4A
                    THE BASIN HAS 10 AC TOP, 7.2 AC BOTTOM AND IS 10FT DEEP WITH 5:1 SIDE SLOPES

122 KO         OUTPUT CONTROL VARIABLES
                    IPRNT          1  PRINT CONTROL
                    IPLOT          0  PLOT CONTROL
                    QSCAL         0.  HYDROGRAPH PLOT SCALE

          HYDROGRAPH ROUTING DATA

123 RS         STORAGE ROUTING
                    NSTPS          1  NUMBER OF SUBREACHES
                     ITYP       ELEV  TYPE OF INITIAL CONDITION
                   RSVRIC       0.00  INITIAL CONDITION
                        X       0.00  WORKING R AND D COEFFICIENT

124 SA              AREA       7.2       7.8       8.3       8.9       9.4      10.0

125 SQ         DISCHARGE        0.       20.       20.       20.       20.       20.

126 SE         ELEVATION      0.00      2.00      4.00      6.00      8.00     10.00
                                                                ***

                                             COMPUTED STORAGE-ELEVATION DATA

         STORAGE      0.00     15.00     31.09     48.29     66.59     85.98
       ELEVATION      0.00      2.00      4.00      6.00      8.00     10.00
```

HYDROGRAPH AT STATION 43BASN

DA	MON	HRMN	ORD	OUTFLOW	STORAGE	STAGE	DA	MON	HRMN	ORD	OUTFLOW	STORAGE	STAGE	DA	MON	HRMN	ORD	OUTFLOW	STORAGE	STAGE
1		0000	1	0.	0.0	0.0	1		0820	101	0.	0.0	0.0	1		1640	201	20.	65.0	7.8
1		0005	2	0.	0.0	0.0	1		0825	102	0.	0.0	0.0	1		1645	202	20.	65.0	7.8
1		0010	3	0.	0.0	0.0	1		0830	103	0.	0.0	0.0	1		1650	203	20.	65.0	7.8
1		0015	4	0.	0.0	0.0	1		0835	104	0.	0.0	0.0	1		1655	204	20.	65.0	7.8
1		0020	5	0.	0.0	0.0	1		0840	105	0.	0.0	0.0	1		1700	205	20.	65.0	7.8
1		0025	6	0.	0.0	0.0	1		0845	106	0.	0.0	0.0	1		1705	206	20.	64.9	7.8
1		0030	7	0.	0.0	0.0	1		0850	107	0.	0.0	0.0	1		1710	207	20.	64.9	7.8
1		0035	8	0.	0.0	0.0	1		0855	108	0.	0.0	0.0	1		1715	208	20.	64.9	7.8
1		0040	9	0.	0.0	0.0	1		0900	109	0.	0.0	0.0	1		1720	209	20.	64.9	7.8
1		0045	10	0.	0.0	0.0	1		0905	110	0.	0.0	0.0	1		1725	210	20.	64.9	7.8
1		0050	11	0.	0.0	0.0	1		0910	111	0.	0.0	0.0	1		1730	211	20.	64.9	7.8
1		0055	12	0.	0.0	0.0	1		0915	112	0.	0.0	0.0	1		1735	212	20.	64.9	7.8
1		0100	13	0.	0.0	0.0	1		0920	113	0.	0.0	0.0	1		1740	213	20.	64.8	7.8
1		0105	14	0.	0.0	0.0	1		0925	114	0.	0.0	0.0	1		1745	214	20.	64.8	7.8
1		0110	15	0.	0.0	0.0	1		0930	115	0.	0.0	0.0	1		1750	215	20.	64.8	7.8
1		0115	16	0.	0.0	0.0	1		0935	116	0.	0.0	0.0	1		1755	216	20.	64.8	7.8
1		0120	17	0.	0.0	0.0	1		0940	117	0.	0.0	0.0	1		1800	217	20.	64.8	7.8
1		0125	18	0.	0.0	0.0	1		0945	118	0.	0.0	0.0	1		1805	218	20.	64.7	7.8
1		0130	19	0.	0.0	0.0	1		0950	119	0.	0.0	0.0	1		1810	219	20.	64.7	7.8
1		0135	20	0.	0.0	0.0	1		0955	120	0.	0.0	0.0	1		1815	220	20.	64.7	7.8
1		0140	21	0.	0.0	0.0	1		1000	121	0.	0.0	0.0	1		1820	221	20.	64.6	7.8
1		0145	22	0.	0.0	0.0	1		1005	122	0.	0.0	0.0	1		1825	222	20.	64.6	7.8
1		0150	23	0.	0.0	0.0	1		1010	123	0.	0.0	0.0	1		1830	223	20.	64.6	7.8
1		0155	24	0.	0.0	0.0	1		1015	124	0.	0.0	0.0	1		1835	224	20.	64.5	7.8
1		0200	25	0.	0.0	0.0	1		1020	125	0.	0.0	0.0	1		1840	225	20.	64.5	7.8
1		0205	26	0.	0.0	0.0	1		1025	126	0.	0.0	0.0	1		1845	226	20.	64.5	7.8
1		0210	27	0.	0.0	0.0	1		1030	127	0.	0.0	0.0	1		1850	227	20.	64.4	7.8
1		0215	28	0.	0.0	0.0	1		1035	128	0.	0.0	0.0	1		1855	228	20.	64.4	7.8
1		0220	29	0.	0.0	0.0	1		1040	129	0.	0.0	0.0	1		1900	229	20.	64.3	7.8
1		0225	30	0.	0.0	0.0	1		1045	130	0.	0.0	0.0	1		1905	230	20.	64.3	7.7
1		0230	31	0.	0.0	0.0	1		1050	131	0.	0.0	0.0	1		1910	231	20.	64.3	7.7
1		0235	32	0.	0.0	0.0	1		1055	132	0.	0.0	0.0	1		1915	232	20.	64.2	7.7
1		0240	33	0.	0.0	0.0	1		1100	133	0.	0.0	0.0	1		1920	233	20.	64.2	7.7
1		0245	34	0.	0.0	0.0	1		1105	134	0.	0.0	0.0	1		1925	234	20.	64.1	7.7
1		0250	35	0.	0.0	0.0	1		1110	135	0.	0.0	0.0	1		1930	235	20.	64.1	7.7
1		0255	36	0.	0.0	0.0	1		1115	136	0.	0.0	0.0	1		1935	236	20.	64.1	7.7
1		0300	37	0.	0.0	0.0	1		1120	137	0.	0.0	0.0	1		1940	237	20.	64.0	7.7
1		0305	38	0.	0.0	0.0	1		1125	138	0.	0.0	0.0	1		1945	238	20.	64.0	7.7
1		0310	39	0.	0.0	0.0	1		1130	139	0.	0.0	0.0	1		1950	239	20.	63.9	7.7
1		0315	40	0.	0.0	0.0	1		1135	140	0.	0.0	0.0	1		1955	240	20.	63.9	7.7
1		0320	41	0.	0.0	0.0	1		1140	141	0.	0.0	0.0	1		2000	241	20.	63.8	7.7
1		0325	42	0.	0.0	0.0	1		1145	142	0.	0.0	0.0	1		2005	242	20.	63.8	7.7
1		0330	43	0.	0.0	0.0	1		1150	143	0.	0.0	0.0	1		2010	243	20.	63.7	7.7
1		0335	44	0.	0.0	0.0	1		1155	144	1.	0.8	0.1	1		2015	244	20.	63.7	7.7
1		0340	45	0.	0.0	0.0	1		1200	145	7.	5.1	0.7	1		2020	245	20.	63.6	7.7
1		0345	46	0.	0.0	0.0	1		1205	146	18.	13.2	1.8	1		2025	246	20.	63.6	7.7
1		0350	47	0.	0.0	0.0	1		1210	147	20.	22.5	2.9	1		2030	247	20.	63.5	7.7
1		0355	48	0.	0.0	0.0	1		1215	148	20.	31.4	4.0	1		2035	248	20.	63.4	7.7
1		0400	49	0.	0.0	0.0	1		1220	149	20.	38.8	4.9	1		2040	249	20.	63.4	7.6
1		0405	50	0.	0.0	0.0	1		1225	150	20.	44.7	5.6	1		2045	250	20.	63.3	7.6
1		0410	51	0.	0.0	0.0	1		1230	151	20.	49.1	6.1	1		2050	251	20.	63.2	7.6
1		0415	52	0.	0.0	0.0	1		1235	152	20.	52.4	6.4	1		2055	252	20.	63.2	7.6
1		0420	53	0.	0.0	0.0	1		1240	153	20.	54.8	6.7	1		2100	253	20.	63.1	7.6
1		0425	54	0.	0.0	0.0	1		1245	154	20.	56.6	6.9	1		2105	254	20.	63.1	7.6
1		0430	55	0.	0.0	0.0	1		1250	155	20.	58.0	7.1	1		2110	255	20.	63.0	7.6
1		0435	56	0.	0.0	0.0	1		1255	156	20.	59.0	7.2	1		2115	256	20.	62.9	7.6
1		0440	57	0.	0.0	0.0	1		1300	157	20.	59.9	7.3	1		2120	257	20.	62.9	7.6
1		0445	58	0.	0.0	0.0	1		1305	158	20.	60.5	7.3	1		2125	258	20.	62.8	7.6
1		0450	59	0.	0.0	0.0	1		1310	159	20.	61.1	7.4	1		2130	259	20.	62.7	7.6
1		0455	60	0.	0.0	0.0	1		1315	160	20.	61.5	7.4	1		2135	260	20.	62.7	7.6
1		0500	61	0.	0.0	0.0	1		1320	161	20.	61.9	7.5	1		2140	261	20.	62.6	7.6
1		0505	62	0.	0.0	0.0	1		1325	162	20.	62.2	7.5	1		2145	262	20.	62.5	7.6
1		0510	63	0.	0.0	0.0	1		1330	163	20.	62.4	7.5	1		2150	263	20.	62.5	7.5
1		0515	64	0.	0.0	0.0	1		1335	164	20.	62.7	7.6	1		2155	264	20.	62.4	7.5
1		0520	65	0.	0.0	0.0	1		1340	165	20.	62.9	7.6	1		2200	265	20.	62.3	7.5
1		0525	66	0.	0.0	0.0	1		1345	166	20.	63.1	7.6	1		2205	266	20.	62.3	7.5
1		0530	67	0.	0.0	0.0	1		1350	167	20.	63.3	7.6	1		2210	267	20.	62.2	7.5
1		0535	68	0.	0.0	0.0	1		1355	168	20.	63.4	7.7	1		2215	268	20.	62.1	7.5
1		0540	69	0.	0.0	0.0	1		1400	169	20.	63.6	7.7	1		2220	269	20.	62.1	7.5
1		0545	70	0.	0.0	0.0	1		1405	170	20.	63.7	7.7	1		2225	270	20.	62.0	7.5
1		0550	71	0.	0.0	0.0	1		1410	171	20.	63.8	7.7	1		2230	271	20.	62.0	7.5
1		0555	72	0.	0.0	0.0	1		1415	172	20.	63.9	7.7	1		2235	272	20.	61.9	7.5
1		0600	73	0.	0.0	0.0	1		1420	173	20.	64.1	7.7	1		2240	273	20.	61.8	7.5
1		0605	74	0.	0.0	0.0	1		1425	174	20.	64.1	7.7	1		2245	274	20.	61.8	7.5
1		0610	75	0.	0.0	0.0	1		1430	175	20.	64.2	7.7	1		2250	275	20.	61.7	7.5
1		0615	76	0.	0.0	0.0	1		1435	176	20.	64.3	7.8	1		2255	276	20.	61.6	7.5
1		0620	77	0.	0.0	0.0	1		1440	177	20.	64.4	7.8	1		2300	277	20.	61.6	7.5
1		0625	78	0.	0.0	0.0	1		1445	178	20.	64.4	7.8	1		2305	278	20.	61.5	7.4
1		0630	79	0.	0.0	0.0	1		1450	179	20.	64.5	7.8	1		2310	279	20.	61.4	7.4
1		0635	80	0.	0.0	0.0	1		1455	180	20.	64.6	7.8	1		2315	280	20.	61.4	7.4
1		0640	81	0.	0.0	0.0	1		1500	181	20.	64.6	7.8	1		2320	281	20.	61.3	7.4
1		0645	82	0.	0.0	0.0	1		1505	182	20.	64.6	7.8	1		2325	282	20.	61.2	7.4
1		0650	83	0.	0.0	0.0	1		1510	183	20.	64.7	7.8	1		2330	283	20.	61.2	7.4
1		0655	84	0.	0.0	0.0	1		1515	184	20.	64.7	7.8	1		2335	284	20.	61.1	7.4
1		0700	85	0.	0.0	0.0	1		1520	185	20.	64.7	7.8	1		2340	285	20.	61.0	7.4
1		0705	86	0.	0.0	0.0	1		1525	186	20.	64.8	7.8	1		2345	286	20.	61.0	7.4
1		0710	87	0.	0.0	0.0	1		1530	187	20.	64.8	7.8	1		2350	287	20.	60.9	7.4
1		0715	88	0.	0.0	0.0	1		1535	188	20.	64.8	7.8	1		2355	288	20.	60.8	7.4
1		0720	89	0.	0.0	0.0	1		1540	189	20.	64.8	7.8	2		0000	289	20.	60.8	7.4
1		0725	90	0.	0.0	0.0	1		1545	190	20.	64.9	7.8	2		0005	290	20.	60.7	7.4
1		0730	91	0.	0.0	0.0	1		1550	191	20.	64.9	7.8	2		0010	291	20.	60.6	7.3
1		0735	92	0.	0.0	0.0	1		1555	192	20.	64.9	7.8	2		0015	292	20.	60.5	7.3
1		0740	93	0.	0.0	0.0	1		1600	193	20.	64.9	7.8	2		0020	293	20.	60.4	7.3
1		0745	94	0.	0.0	0.0	1		1605	194	20.	64.9	7.8	2		0025	294	20.	60.3	7.3
1		0750	95	0.	0.0	0.0	1		1610	195	20.	64.9	7.8	2		0030	295	20.	60.2	7.3
1		0755	96	0.	0.0	0.0	1		1615	196	20.	64.9	7.8	2		0035	296	20.	60.1	7.3
1		0800	97	0.	0.0	0.0	1		1620	197	20.	64.9	7.8	2		0040	297	20.	59.9	7.3
1		0805	98	0.	0.0	0.0	1		1625	198	20.	64.9	7.8	2		0045	298	20.	59.8	7.3
1		0810	99	0.	0.0	0.0	1		1630	199	20.	65.0	7.8	2		0050	299	20.	59.7	7.2
1		0815	100	0.	0.0	0.0	1		1635	200	20.	65.0	7.8	2		0055	300	20.	59.5	7.2

```
  PEAK FLOW      TIME                          MAXIMUM AVERAGE FLOW
                                        6-HR       24-HR       72-HR      24.92-HR
+   (CFS)        (HR)
                               (CFS)
+      20.      12.17                    20.         11.         10.         10.
                             (INCHES)  0.202       0.434       0.434       0.434
                              (AC-FT)    10.         21.         21.         21.

 PEAK STORAGE    TIME                        MAXIMUM AVERAGE STORAGE
                                        6-HR       24-HR       72-HR      24.92-HR
+   (AC-FT)      (HR)
       65.      16.75                    65.         33.         32.         32.

  PEAK STAGE     TIME                         MAXIMUM AVERAGE STAGE
                                        6-HR       24-HR       72-HR      24.92-HR
+   (FEET)       (HR)
       7.82     16.75                   7.78        4.02        3.87        3.87

                           CUMULATIVE AREA =    0.92 SQ MI

*** *** *** *** *** *** *** *** *** *** *** *** *** *** *** *** *** *** *** *** *** *** *** *** *** *** *** *** *** *** *** *** ***

           *************
           *           *
127 KK     *   ROA51A  *
           *           *
           *************
                    *************DOBBINS ROAD STORM DRAIN****************************
                    ROUTE FLOW FROM DR43C WEST (1ST REACH) ALONG DOBBINS TO 47TH AVENUE

          HYDROGRAPH ROUTING DATA
```

```
130 RK          KINEMATIC WAVE STREAM ROUTING
                         L       3082.  CHANNEL LENGTH
                         S      0.0042  SLOPE
                         N       0.013  CHANNEL ROUGHNESS COEFFICIENT
                        CA        0.00  CONTRIBUTING AREA
                     SHAPE        CIRC  CHANNEL SHAPE
                        WD        3.00  BOTTOM WIDTH OR DIAMETER
                         Z        0.00  SIDE SLOPE
                    NDXMIN           2  MINIMUM NUMBER OF DX INTERVALS

                                           ***
                            COMPUTED KINEMATIC PARAMETERS
                                 VARIABLE TIME STEP
                                (DT SHOWN IS A MINIMUM)

        ELEMENT    ALPHA      M        DT        DX      PEAK   TIME TO    VOLUME   MAXIMUM
                                                                 PEAK               CELERITY
                                      (MIN)     (FT)    (CFS)   (MIN)      (IN)      (FPS)

         MAIN       4.81     1.25      2.23   1027.33    20.11  1495.36     0.43      8.00

CONTINUITY SUMMARY (AC-FT) - INFLOW=0.2132E+02  EXCESS=0.0000E+00 OUTFLOW=0.2118E+02 BASIN STORAGE=0.1293E+00 PERCENT ERROR=   0.1

                              INTERPOLATED TO SPECIFIED COMPUTATION INTERVAL

         MAIN       4.81     1.25      5.00              20.09  1495.00     0.43

     ***           ***           ***           ***           ***

                  HYDROGRAPH AT STATION   ROA51A

 PEAK FLOW      TIME                       MAXIMUM AVERAGE FLOW
                                  6-HR        24-HR        72-HR      24.92-HR
+  (CFS)        (HR)
                          (CFS)
+     20.      24.92                20.          11.          10.          10.
                        (INCHES)   0.202        0.431        0.431        0.431
                         (AC-FT)     10.          21.          21.          21.

                       CUMULATIVE AREA =    0.92 SQ MI

*** *** *** *** *** *** *** *** *** *** *** *** *** *** *** *** *** *** *** *** *** *** *** *** *** *** *** *** *** *** *** *** *** ***

             *************
             *           *
131 KK       *   ROA51B  *
             *           *
             *************
                   ***************DOBBINS ROAD STORM DRAIN****************************
                   ROUTE FLOW ALONG DOBBINS FROM 47TH TO 51ST AVENUES
                   CROSS-SECTION REVISED TO REFLECT TO USE STORM DRAIN

           HYDROGRAPH ROUTING DATA

135 RK          KINEMATIC WAVE STREAM ROUTING
                         L       2597.  CHANNEL LENGTH
                         S      0.0033  SLOPE
                         N       0.013  CHANNEL ROUGHNESS COEFFICIENT
                        CA        0.00  CONTRIBUTING AREA
                     SHAPE        CIRC  CHANNEL SHAPE
                        WD        3.00  BOTTOM WIDTH OR DIAMETER
                         Z        0.00  SIDE SLOPE
                    NDXMIN           2  MINIMUM NUMBER OF DX INTERVALS

                                           ***
                            COMPUTED KINEMATIC PARAMETERS
                                 VARIABLE TIME STEP
                                (DT SHOWN IS A MINIMUM)

        ELEMENT    ALPHA      M        DT        DX      PEAK   TIME TO    VOLUME   MAXIMUM
                                                                 PEAK               CELERITY
                                      (MIN)     (FT)    (CFS)   (MIN)      (IN)      (FPS)

         MAIN       4.27     1.25      2.02    865.67    20.12  1496.43     0.43      7.27

CONTINUITY SUMMARY (AC-FT) - INFLOW=0.2117E+02  EXCESS=0.0000E+00 OUTFLOW=0.2107E+02 BASIN STORAGE=0.1222E+00 PERCENT ERROR=  -0.1

                              INTERPOLATED TO SPECIFIED COMPUTATION INTERVAL

         MAIN       4.27     1.25      5.00              20.04  1495.00     0.43

     ***           ***           ***           ***           ***

                  HYDROGRAPH AT STATION   ROA51B

 PEAK FLOW      TIME                       MAXIMUM AVERAGE FLOW
                                  6-HR        24-HR        72-HR      24.92-HR
+  (CFS)        (HR)
                          (CFS)
+     20.      24.92                20.          11.          10.          10.
                        (INCHES)   0.202        0.428        0.428        0.428
                         (AC-FT)     10.          21.          21.          21.

                       CUMULATIVE AREA =    0.92 SQ MI

*** *** *** *** *** *** *** *** *** *** *** *** *** *** *** *** *** *** *** *** *** *** *** *** *** *** *** *** *** *** *** *** *** ***

             *************
             *           *
136 KK       *   OA51B   *
             *           *
             *************
                       SUB-BASIN OA51B
                       24-HOUR SCS TYPE II RAINFALL WAS USED TO FIND TC & R FOR THIS BASIN
                       THIS BASIN USED RAINFALL REDUCTION FACTOR OF  .934
                         L = 1.26  Kb = .036  Adj. Slope =  254.0

           SUBBASIN RUNOFF DATA

141 BA       SUBBASIN CHARACTERISTICS
                  TAREA        1.03  SUBBASIN AREA

             PRECIPITATION DATA

32 PB             STORM        3.92  BASIN TOTAL PRECIPITATION

32 PI          INCREMENTAL PRECIPITATION PATTERN
                  0.00     0.00     0.00     0.00     0.00     0.00     0.00     0.00     0.00     0.00
                  0.00     0.00     0.00     0.00     0.00     0.00     0.00     0.00     0.00     0.00
                  0.00     0.00     0.00     0.00     0.00     0.00     0.00     0.00     0.00     0.00
                  0.00     0.00     0.00     0.00     0.00     0.00     0.00     0.00     0.00     0.00
                  0.00     0.00     0.00     0.00     0.00     0.00     0.00     0.00     0.00     0.00
                  0.00     0.00     0.00     0.00     0.00     0.00     0.00     0.00     0.00     0.00
                  0.00     0.00     0.00     0.00     0.00     0.00     0.00     0.00     0.00     0.00
                  0.00     0.00     0.00     0.00     0.00     0.00     0.00     0.00     0.00     0.00
                  0.00     0.00     0.00     0.00     0.00     0.00     0.00     0.00     0.00     0.00
                  0.00     0.00     0.00     0.00     0.00     0.00     0.00     0.00     0.00     0.00
                  0.00     0.00     0.00     0.00     0.00     0.00     0.00     0.00     0.00     0.00
                  0.00     0.00     0.00     0.00     0.00     0.00     0.00     0.00     0.00     0.00
                  0.00     0.00     0.00     0.00     0.00     0.00     0.00     0.01     0.00     0.01
                  0.01     0.01     0.01     0.01     0.01     0.01     0.01     0.01     0.03     0.03
                  0.03     0.09     0.09     0.09     0.01     0.01     0.01     0.01     0.01     0.01
                  0.01     0.01     0.01     0.01     0.01     0.01     0.00     0.00     0.00     0.00
                  0.00     0.00     0.00     0.00     0.00     0.00     0.00     0.00     0.00     0.00
                  0.00     0.00     0.00     0.00     0.00     0.00     0.00     0.00     0.00     0.00
                  0.00     0.00     0.00     0.00     0.00     0.00     0.00     0.00     0.00     0.00
                  0.00     0.00     0.00     0.00     0.00     0.00     0.00     0.00     0.00     0.00
                  0.00     0.00     0.00     0.00     0.00     0.00     0.00     0.00     0.00     0.00
                  0.00     0.00     0.00     0.00     0.00     0.00     0.00     0.00     0.00     0.00
                  0.00     0.00     0.00     0.00     0.00     0.00     0.00     0.00     0.00     0.00
                  0.00     0.00     0.00     0.00     0.00     0.00     0.00     0.00     0.00     0.00
                  0.00     0.00     0.00     0.00     0.00     0.00     0.00     0.00     0.00     0.00
                  0.00     0.00     0.00     0.00     0.00     0.00     0.00     0.00     0.00     0.00
                  0.00     0.00     0.00     0.00     0.00     0.00     0.00     0.00     0.00     0.00
                  0.00     0.00     0.00     0.00     0.00     0.00     0.00     0.00     0.00     0.00
                  0.00     0.00     0.00     0.00     0.00     0.00     0.00     0.00

142 LG       GREEN AND AMPT LOSS RATE
                  STRTL        0.27  STARTING LOSS
                    DTH        0.27  MOISTURE DEFICIT
                   PSIF        6.00  WETTING FRONT SUCTION
                  XKSAT        0.20  HYDRAULIC CONDUCTIVITY
                  RTIMP       30.00  PERCENT IMPERVIOUS AREA

143 UC       CLARK UNITGRAPH
                     TC        0.23  TIME OF CONCENTRATION
                      R        0.07  STORAGE COEFFICIENT

144 UA       ACCUMULATED-AREA VS. TIME,  11 ORDINATES
                  0.0       5.0      16.0      30.0      65.0      77.0      84.0      90.0      94.0      97.0
                100.0

                                                     ***

                                       UNIT HYDROGRAPH PARAMETERS
                                  CLARK   TC=  0.23 HR,       R=  0.07 HR
                                  SNYDER  TP=  0.13 HR,      CP=  0.67

                                             UNIT HYDROGRAPH
                                         6 END-OF-PERIOD ORDINATES
            1442.     3007.     2272.      905.      253.       71.

     ***           ***           ***           ***           ***

                       HYDROGRAPH AT STATION    OA51B
```

TOTAL RAINFALL = 3.92, TOTAL LOSS = 1.85, TOTAL EXCESS = 2.07

PEAK FLOW	TIME		MAXIMUM AVERAGE FLOW			
			6-HR	24-HR	72-HR	24.92-HR
+ (CFS)	(HR)					
		(CFS)				
+ 2353.	12.00		191.	57.	55.	55.
		(INCHES)	1.722	2.063	2.064	2.064
		(AC-FT)	95.	113.	113.	113.

CUMULATIVE AREA = 1.03 SQ MI

*** ***

146 KK * OA51R *

DIVERT RETENTION VOLUME

DT DIVERSION
ISTAD RET51 DIVERSION HYDROGRAPH IDENTIFICATION
DSTRMX 80.90 MAXIMUM VOLUME TO BE DIVERTED

DI INFLOW 0.00 1000.00 10000.00

DQ DIVERTED FLOW 0.00 1000.00 10000.00

***

*** *** *** *** ***

DIVERSION HYDROGRAPH RET51

PEAK FLOW	TIME		MAXIMUM AVERAGE FLOW			
			6-HR	24-HR	72-HR	24.92-HR
+ (CFS)	(HR)					
		(CFS)				
+ 2353.	12.00		153.	41.	39.	39.
		(INCHES)	1.377	1.473	1.473	1.473
		(AC-FT)	76.	81.	81.	81.

CUMULATIVE AREA = 1.03 SQ MI

*** *** *** *** ***

HYDROGRAPH AT STATION OA51R

PEAK FLOW	TIME		MAXIMUM AVERAGE FLOW			
			6-HR	24-HR	72-HR	24.92-HR
+ (CFS)	(HR)					
		(CFS)				
+ 900.	12.17		55.	16.	16.	16.
		(INCHES)	0.498	0.591	0.591	0.591
		(AC-FT)	27.	32.	32.	32.

CUMULATIVE AREA = 1.03 SQ MI

*** ***

151 KK * DRBASN *

**************PROPOSED DETENTION BASIN IN SUB-BASIN OA51B******************
DETENTION BASIN AT THE DOBBINS AND 51ST AVE INTERSECTION.
THIS BASIN WAS ADDED FOR THE ADMP ALTERNATE 4
BASIN HAS 10 AC TOP, 8.5 AC BOTTOM AND IS 5 FT DEEP WITH 5:1 SIDE SLOPES

156 KO OUTPUT CONTROL VARIABLES
IPRNT 1 PRINT CONTROL
IPLOT 0 PLOT CONTROL
QSCAL 0. HYDROGRAPH PLOT SCALE

HYDROGRAPH ROUTING DATA

157 RS STORAGE ROUTING
NSTPS 1 NUMBER OF SUBREACHES
ITYP ELEV TYPE OF INITIAL CONDITION
RSVRIC 0.00 INITIAL CONDITION
X 0.00 WORKING R AND D COEFFICIENT

158 SA	AREA	8.5	8.8	9.1	9.4	9.7	10.0
159 SQ	DISCHARGE	0.	20.	20.	20.	20.	20.
160 SE	ELEVATION	0.00	1.00	2.00	3.00	4.00	5.00

***

COMPUTED STORAGE-ELEVATION DATA

STORAGE	0.00	8.65	17.60	26.85	36.40	46.25
ELEVATION	0.00	1.00	2.00	3.00	4.00	5.00

HYDROGRAPH AT STATION DRBASN

DA	MON	HRMN	ORD	OUTFLOW	STORAGE	STAGE	DA	MON	HRMN	ORD	OUTFLOW	STORAGE	STAGE	DA	MON	HRMN	ORD	OUTFLOW	STORAGE	STAGE
1		0000	1	0.	0.0	0.0	1		0820	101	0.	0.0	0.0	1		1640	201	20.	18.2	2.1
1		0005	2	0.	0.0	0.0	1		0825	102	0.	0.0	0.0	1		1645	202	20.	18.1	2.1
1		0010	3	0.	0.0	0.0	1		0830	103	0.	0.0	0.0	1		1650	203	20.	18.1	2.1
1		0015	4	0.	0.0	0.0	1		0835	104	0.	0.0	0.0	1		1655	204	20.	18.1	2.1
1		0020	5	0.	0.0	0.0	1		0840	105	0.	0.0	0.0	1		1700	205	20.	18.0	2.0
1		0025	6	0.	0.0	0.0	1		0845	106	0.	0.0	0.0	1		1705	206	20.	18.0	2.0
1		0030	7	0.	0.0	0.0	1		0850	107	0.	0.0	0.0	1		1710	207	20.	18.0	2.0
1		0035	8	0.	0.0	0.0	1		0855	108	0.	0.0	0.0	1		1715	208	20.	18.0	2.0
1		0040	9	0.	0.0	0.0	1		0900	109	0.	0.0	0.0	1		1720	209	20.	17.9	2.0
1		0045	10	0.	0.0	0.0	1		0905	110	0.	0.0	0.0	1		1725	210	20.	17.9	2.0
1		0050	11	0.	0.0	0.0	1		0910	111	0.	0.0	0.0	1		1730	211	20.	17.9	2.0
1		0055	12	0.	0.0	0.0	1		0915	112	0.	0.0	0.0	1		1735	212	20.	17.8	2.0
1		0100	13	0.	0.0	0.0	1		0920	113	0.	0.0	0.0	1		1740	213	20.	17.8	2.0
1		0105	14	0.	0.0	0.0	1		0925	114	0.	0.0	0.0	1		1745	214	20.	17.8	2.0
1		0110	15	0.	0.0	0.0	1		0930	115	0.	0.0	0.0	1		1750	215	20.	17.7	2.0
1		0115	16	0.	0.0	0.0	1		0935	116	0.	0.0	0.0	1		1755	216	20.	17.7	2.0
1		0120	17	0.	0.0	0.0	1		0940	117	0.	0.0	0.0	1		1800	217	20.	17.7	2.0
1		0125	18	0.	0.0	0.0	1		0945	118	0.	0.0	0.0	1		1805	218	20.	17.6	2.0
1		0130	19	0.	0.0	0.0	1		0950	119	0.	0.0	0.0	1		1810	219	20.	17.6	2.0
1		0135	20	0.	0.0	0.0	1		0955	120	0.	0.0	0.0	1		1815	220	20.	17.5	2.0
1		0140	21	0.	0.0	0.0	1		1000	121	0.	0.0	0.0	1		1820	221	20.	17.5	2.0
1		0145	22	0.	0.0	0.0	1		1005	122	0.	0.0	0.0	1		1825	222	20.	17.4	2.0
1		0150	23	0.	0.0	0.0	1		1010	123	0.	0.0	0.0	1		1830	223	20.	17.3	2.0
1		0155	24	0.	0.0	0.0	1		1015	124	0.	0.0	0.0	1		1835	224	20.	17.3	2.0
1		0200	25	0.	0.0	0.0	1		1020	125	0.	0.0	0.0	1		1840	225	20.	17.2	2.0
1		0205	26	0.	0.0	0.0	1		1025	126	0.	0.0	0.0	1		1845	226	20.	17.2	2.0
1		0210	27	0.	0.0	0.0	1		1030	127	0.	0.0	0.0	1		1850	227	20.	17.1	1.9
1		0215	28	0.	0.0	0.0	1		1035	128	0.	0.0	0.0	1		1855	228	20.	17.1	1.9
1		0220	29	0.	0.0	0.0	1		1040	129	0.	0.0	0.0	1		1900	229	20.	17.0	1.9
1		0225	30	0.	0.0	0.0	1		1045	130	0.	0.0	0.0	1		1905	230	20.	17.0	1.9
1		0230	31	0.	0.0	0.0	1		1050	131	0.	0.0	0.0	1		1910	231	20.	16.9	1.9
1		0235	32	0.	0.0	0.0	1		1055	132	0.	0.0	0.0	1		1915	232	20.	16.9	1.9
1		0240	33	0.	0.0	0.0	1		1100	133	0.	0.0	0.0	1		1920	233	20.	16.8	1.9
1		0245	34	0.	0.0	0.0	1		1105	134	0.	0.0	0.0	1		1925	234	20.	16.8	1.9
1		0250	35	0.	0.0	0.0	1		1110	135	0.	0.0	0.0	1		1930	235	20.	16.7	1.9
1		0255	36	0.	0.0	0.0	1		1115	136	0.	0.0	0.0	1		1935	236	20.	16.7	1.9
1		0300	37	0.	0.0	0.0	1		1120	137	0.	0.0	0.0	1		1940	237	20.	16.6	1.9
1		0305	38	0.	0.0	0.0	1		1125	138	0.	0.0	0.0	1		1945	238	20.	16.6	1.9
1		0310	39	0.	0.0	0.0	1		1130	139	0.	0.0	0.0	1		1950	239	20.	16.5	1.9
1		0315	40	0.	0.0	0.0	1		1135	140	0.	0.0	0.0	1		1955	240	20.	16.5	1.9
1		0320	41	0.	0.0	0.0	1		1140	141	0.	0.0	0.0	1		2000	241	20.	16.4	1.9
1		0325	42	0.	0.0	0.0	1		1145	142	0.	0.0	0.0	1		2005	242	20.	16.3	1.9
1		0330	43	0.	0.0	0.0	1		1150	143	0.	0.0	0.0	1		2010	243	20.	16.2	1.8
1		0335	44	0.	0.0	0.0	1		1155	144	0.	0.0	0.0	1		2015	244	20.	16.2	1.8
1		0340	45	0.	0.0	0.0	1		1200	145	0.	0.0	0.0	1		2020	245	20.	16.1	1.8
1		0345	46	0.	0.0	0.0	1		1205	146	0.	0.0	0.0	1		2025	246	20.	16.0	1.8
1		0350	47	0.	0.0	0.0	1		1210	147	7.	3.1	0.4	1		2030	247	20.	16.0	1.8
1		0355	48	0.	0.0	0.0	1		1215	148	19.	8.2	0.9	1		2035	248	20.	15.9	1.8
1		0400	49	0.	0.0	0.0	1		1220	149	20.	11.2	1.3	1		2040	249	20.	15.8	1.8
1		0405	50	0.	0.0	0.0	1		1225	150	20.	12.7	1.5	1		2045	250	20.	15.7	1.8
1		0410	51	0.	0.0	0.0	1		1230	151	20.	13.6	1.5	1		2050	251	20.	15.7	1.8
1		0415	52	0.	0.0	0.0	1		1235	152	20.	14.1	1.6	1		2055	252	20.	15.6	1.8
1		0420	53	0.	0.0	0.0	1		1240	153	20.	14.6	1.7	1		2100	253	20.	15.5	1.8
1		0425	54	0.	0.0	0.0	1		1245	154	20.	15.0	1.7	1		2105	254	20.	15.4	1.8
1		0430	55	0.	0.0	0.0	1		1250	155	20.	15.3	1.7	1		2110	255	20.	15.4	1.8
1		0435	56	0.	0.0	0.0	1		1255	156	20.	15.6	1.8	1		2115	256	20.	15.3	1.7
1		0440	57	0.	0.0	0.0	1		1300	157	20.	15.9	1.8	1		2120	257	20.	15.2	1.7
1		0445	58	0.	0.0	0.0	1		1305	158	20.	16.2	1.8	1		2125	258	20.	15.1	1.7
1		0450	59	0.	0.0	0.0	1		1310	159	20.	16.4	1.9	1		2130	259	20.	15.1	1.7
1		0455	60	0.	0.0	0.0	1		1315	160	20.	16.6	1.9	1		2135	260	20.	15.0	1.7
1		0500	61	0.	0.0	0.0	1		1320	161	20.	16.8	1.9	1		2140	261	20.	14.9	1.7
1		0505	62	0.	0.0	0.0	1		1325	162	20.	17.0	1.9	1		2145	262	20.	14.9	1.7
1		0510	63	0.	0.0	0.0	1		1330	163	20.	17.1	1.9	1		2150	263	20.	14.8	1.7
1		0515	64	0.	0.0	0.0	1		1335	164	20.	17.3	2.0	1		2155	264	20.	14.7	1.7
1		0520	65	0.	0.0	0.0	1		1340	165	20.	17.4	2.0	1		2200	265	20.	14.6	1.7
1		0525	66	0.	0.0	0.0	1		1345	166	20.	17.5	2.0	1		2205	266	20.	14.6	1.7
1		0530	67	0.	0.0	0.0	1		1350	167	20.	17.6	2.0	1		2210	267	20.	14.5	1.7
1		0535	68	0.	0.0	0.0	1		1355	168	20.	17.7	2.0	1		2215	268	20.	14.4	1.6
1		0540	69	0.	0.0	0.0	1		1400	169	20.	17.8	2.0	1		2220	269	20.	14.3	1.6
1		0545	70	0.	0.0	0.0	1		1405	170	20.	17.8	2.0	1		2225	270	20.	14.3	1.6
1		0550	71	0.	0.0	0.0	1		1410	171	20.	17.9	2.0	1		2230	271	20.	14.2	1.6
1		0555	72	0.	0.0	0.0	1		1415	172	20.	18.0	2.0	1		2235	272	20.	14.1	1.6
1		0600	73	0.	0.0	0.0	1		1420	173	20.	18.0	2.0	1		2240	273	20.	14.0	1.6
1		0605	74	0.	0.0	0.0	1		1425	174	20.	18.1	2.1	1		2245	274	20.	14.0	1.6
1		0610	75	0.	0.0	0.0	1		1430	175	20.	18.1	2.1	1		2250	275	20.	13.9	1.6

1	0615	76	0.	0.0	0.0 *	1	1435	176	20.	18.2	2.1 *	1	2255	276	20.	13.8	1.6
1	0620	77	0.	0.0	0.0 *	1	1440	177	20.	18.2	2.1 *	1	2300	277	20.	13.8	1.6
1	0625	78	0.	0.0	0.0 *	1	1445	178	20.	18.2	2.1 *	1	2305	278	20.	13.7	1.6
1	0630	79	0.	0.0	0.0 *	1	1450	179	20.	18.2	2.1 *	1	2310	279	20.	13.6	1.6
1	0635	80	0.	0.0	0.0 *	1	1455	180	20.	18.2	2.1 *	1	2315	280	20.	13.5	1.5
1	0640	81	0.	0.0	0.0 *	1	1500	181	20.	18.2	2.1 *	1	2320	281	20.	13.5	1.5
1	0645	82	0.	0.0	0.0 *	1	1505	182	20.	18.3	2.1 *	1	2325	282	20.	13.4	1.5
1	0650	83	0.	0.0	0.0 *	1	1510	183	20.	18.3	2.1 *	1	2330	283	20.	13.3	1.5
1	0655	84	0.	0.0	0.0 *	1	1515	184	20.	18.3	2.1 *	1	2335	284	20.	13.2	1.5
1	0700	85	0.	0.0	0.0 *	1	1520	185	20.	18.3	2.1 *	1	2340	285	20.	13.2	1.5
1	0705	86	0.	0.0	0.0 *	1	1525	186	20.	18.3	2.1 *	1	2345	286	20.	13.1	1.5
1	0710	87	0.	0.0	0.0 *	1	1530	187	20.	18.3	2.1 *	1	2350	287	20.	13.0	1.5
1	0715	88	0.	0.0	0.0 *	1	1535	188	20.	18.3	2.1 *	1	2355	288	20.	12.9	1.5
1	0720	89	0.	0.0	0.0 *	1	1540	189	20.	18.3	2.1 *	2	0000	289	20.	12.9	1.5
1	0725	90	0.	0.0	0.0 *	1	1545	190	20.	18.3	2.1 *	2	0005	290	20.	12.8	1.5
1	0730	91	0.	0.0	0.0 *	1	1550	191	20.	18.3	2.1 *	2	0010	291	20.	12.6	1.4
1	0735	92	0.	0.0	0.0 *	1	1555	192	20.	18.2	2.1 *	2	0015	292	20.	12.5	1.4
1	0740	93	0.	0.0	0.0 *	1	1600	193	20.	18.2	2.1 *	2	0020	293	20.	12.4	1.4
1	0745	94	0.	0.0	0.0 *	1	1605	194	20.	18.2	2.1 *	2	0025	294	20.	12.2	1.4
1	0750	95	0.	0.0	0.0 *	1	1610	195	20.	18.2	2.1 *	2	0030	295	20.	12.1	1.4
1	0755	96	0.	0.0	0.0 *	1	1615	196	20.	18.2	2.1 *	2	0035	296	20.	12.0	1.4
1	0800	97	0.	0.0	0.0 *	1	1620	197	20.	18.2	2.1 *	2	0040	297	20.	11.8	1.4
1	0805	98	0.	0.0	0.0 *	1	1625	198	20.	18.2	2.1 *	2	0045	298	20.	11.7	1.3
1	0810	99	0.	0.0	0.0 *	1	1630	199	20.	18.2	2.1 *	2	0050	299	20.	11.6	1.3
1	0815	100	0.	0.0	0.0 *	1	1635	200	20.	18.2	2.1 *	2	0055	300	20.	11.4	1.3

```
PEAK FLOW     TIME                       MAXIMUM AVERAGE FLOW
                             6-HR       24-HR        72-HR      24.92-HR
+  (CFS)      (HR)
                     (CFS)
+     20.     12.33             20.        11.          10.          10.
                   (INCHES)   0.181      0.383        0.383        0.383
                    (AC-FT)     10.        21.          21.          21.

PEAK STORAGE  TIME                       MAXIMUM AVERAGE STORAGE
                             6-HR       24-HR        72-HR      24.92-HR
+  (AC-FT)    (HR)
      18.     15.42             18.         9.           8.           8.

PEAK STAGE    TIME                       MAXIMUM AVERAGE STAGE
                             6-HR       24-HR        72-HR      24.92-HR
+  (FEET)     (HR)
     2.08     15.42            2.02        0.97         0.93         0.93

                    CUMULATIVE AREA =    1.03 SQ MI
```

```
           **************
           *            *
161 KK     *   ER47B    *
           *            *
           **************
```

SUB-BASIN ER47B
THIS SUB-BASIN SPLIT FROM OA51B TO ALLOW FOR DETENTION TO BE USED BELOW
THE WESTERN CANAL - ALT6A
24-HOUR SCS TYPE II RAINFALL WAS USED TO FIND TC & R FOR THIS BASIN
THIS BASIN USED RAINFALL REDUCTION FACTOR OF .934
L = 1.26 Kb = .036 Adj. Slope = 254.0

SUBBASIN RUNOFF DATA

168 BA SUBBASIN CHARACTERISTICS
TAREA 0.34 SUBBASIN AREA

PRECIPITATION DATA

32 PB STORM 3.92 BASIN TOTAL PRECIPITATION

32 PI INCREMENTAL PRECIPITATION PATTERN

0.00	0.00	0.00	0.00	0.00	0.00	0.00	0.00	0.00	0.00
0.00	0.00	0.00	0.00	0.00	0.00	0.00	0.00	0.00	0.00
0.00	0.00	0.00	0.00	0.00	0.00	0.00	0.00	0.00	0.00
0.00	0.00	0.00	0.00	0.00	0.00	0.00	0.00	0.00	0.00
0.00	0.00	0.00	0.00	0.00	0.00	0.00	0.00	0.00	0.00
0.00	0.00	0.00	0.00	0.00	0.00	0.00	0.00	0.00	0.00
0.00	0.00	0.00	0.00	0.00	0.00	0.00	0.00	0.00	0.00
0.00	0.00	0.00	0.00	0.00	0.00	0.00	0.00	0.00	0.00
0.00	0.00	0.00	0.00	0.00	0.00	0.00	0.00	0.00	0.00
0.00	0.00	0.00	0.00	0.00	0.00	0.00	0.00	0.00	0.00
0.00	0.00	0.00	0.00	0.00	0.00	0.00	0.00	0.00	0.00
0.00	0.00	0.00	0.00	0.00	0.00	0.00	0.00	0.00	0.00
0.00	0.00	0.00	0.00	0.00	0.00	0.00	0.01	0.00	0.01
0.01	0.01	0.01	0.01	0.01	0.01	0.01	0.01	0.03	0.03
0.03	0.09	0.09	0.09	0.01	0.01	0.01	0.01	0.01	0.01
0.01	0.01	0.01	0.01	0.01	0.01	0.00	0.00	0.00	0.00
0.00	0.00	0.00	0.00	0.00	0.00	0.00	0.00	0.00	0.00
0.00	0.00	0.00	0.00	0.00	0.00	0.00	0.00	0.00	0.00
0.00	0.00	0.00	0.00	0.00	0.00	0.00	0.00	0.00	0.00
0.00	0.00	0.00	0.00	0.00	0.00	0.00	0.00	0.00	0.00
0.00	0.00	0.00	0.00	0.00	0.00	0.00	0.00	0.00	0.00
0.00	0.00	0.00	0.00	0.00	0.00	0.00	0.00	0.00	0.00
0.00	0.00	0.00	0.00	0.00	0.00	0.00	0.00	0.00	0.00
0.00	0.00	0.00	0.00	0.00	0.00	0.00	0.00	0.00	0.00
0.00	0.00	0.00	0.00	0.00	0.00	0.00	0.00	0.00	0.00
0.00	0.00	0.00	0.00	0.00	0.00	0.00	0.00	0.00	0.00
0.00	0.00	0.00	0.00	0.00	0.00	0.00	0.00	0.00	0.00
0.00	0.00	0.00	0.00	0.00	0.00	0.00	0.00	0.00	0.00
0.00	0.00	0.00	0.00	0.00	0.00	0.00	0.00	0.00	

```
169 LG    GREEN AND AMPT LOSS RATE
              STRTL      0.27  STARTING LOSS
                DTH      0.27  MOISTURE DEFICIT
               PSIF      6.00  WETTING FRONT SUCTION
              XKSAT      0.20  HYDRAULIC CONDUCTIVITY
              RTIMP     30.00  PERCENT IMPERVIOUS AREA

170 UC    CLARK UNITGRAPH
                 TC      0.23  TIME OF CONCENTRATION
                  R      0.07  STORAGE COEFFICIENT

171 UA    ACCUMULATED-AREA VS. TIME,  11 ORDINATES
             0.0      5.0     16.0     30.0     65.0     77.0     84.0     90.0     94.0     97.0
           100.0
```

```
                                   ***

                        UNIT HYDROGRAPH PARAMETERS
                   CLARK   TC=  0.23 HR,        R=  0.07 HR
                  SNYDER   TP=  0.13 HR,       CP=  0.67

                              UNIT HYDROGRAPH
                         6 END-OF-PERIOD ORDINATES
       476.     992.     750.     299.      83.      23.

   ***         ***         ***         ***         ***

                  HYDROGRAPH AT STATION    ER47B

 TOTAL RAINFALL =    3.92, TOTAL LOSS =    1.85, TOTAL EXCESS =    2.07

PEAK FLOW     TIME                       MAXIMUM AVERAGE FLOW
                             6-HR       24-HR        72-HR      24.92-HR
+  (CFS)      (HR)
                     (CFS)
+    777.     12.00             63.        19.          18.          18.
                   (INCHES)   1.722      2.063        2.064        2.064
                    (AC-FT)     31.        37.          37.          37.

                    CUMULATIVE AREA =    0.34 SQ MI
```

```
           **************
           *            *
173 KK     *   ERBASN   *
           *            *
           **************
```

***************PROPOSED BASIN BELOW ER47B**********************************
DETENTION BASIN AT THE ELLIOT AND 47TH AVE INTERSECTION. THE WESTERN CANAL
IS USED AS A COLLECTOR FACILITY AND OUTLETS TO THIS DETENTION BASIN. THE
BASIN HAS 10 AC TOP, 8.3 AC BOTTOM AND IS 6 FT DEEP WITH 5:1 SIDE SLOPES

```
178 KO    OUTPUT CONTROL VARIABLES
              IPRNT         1  PRINT CONTROL
              IPLOT         0  PLOT CONTROL
              QSCAL        0.  HYDROGRAPH PLOT SCALE

        HYDROGRAPH ROUTING DATA

179 RS    STORAGE ROUTING
              NSTPS         1  NUMBER OF SUBREACHES
              ITYP       ELEV  TYPE OF INITIAL CONDITION
              RSVRIC     0.00  INITIAL CONDITION
                  X      0.00  WORKING R AND D COEFFICIENT

180 SA        AREA        8.3      8.5      8.8      9.1      9.4      9.7     10.0

181 SQ   DISCHARGE         0.      20.      20.      20.      20.      20.      20.

182 SE   ELEVATION       0.00     1.00     2.00     3.00     4.00     5.00     6.00

                                   ***

                     COMPUTED STORAGE-ELEVATION DATA

     STORAGE     0.00     8.40    17.05    26.00    35.25    44.80    54.65
   ELEVATION     0.00     1.00     2.00     3.00     4.00     5.00     6.00
```

HYDROGRAPH AT STATION ERBASN

DA	MON	HRMN	ORD	OUTFLOW	STORAGE	STAGE	DA	MON	HRMN	ORD	OUTFLOW	STORAGE	STAGE	DA	MON	HRMN	ORD	OUTFLOW	STORAGE	STAGE
1		0000	1	0.	0.0	0.0	1		0820	101	3.	1.4	0.2	1		1640	201	20.	24.4	2.8
1		0005	2	0.	0.0	0.0	1		0825	102	4.	1.5	0.2	1		1645	202	20.	24.3	2.8
1		0010	3	0.	0.0	0.0	1		0830	103	4.	1.5	0.2	1		1650	203	20.	24.2	2.8
1		0015	4	0.	0.0	0.0	1		0835	104	4.	1.5	0.2	1		1655	204	20.	24.1	2.8
1		0020	5	0.	0.0	0.0	1		0840	105	4.	1.5	0.2	1		1700	205	20.	24.0	2.8
1		0025	6	0.	0.0	0.0	1		0845	106	4.	1.6	0.2	1		1705	206	20.	23.9	2.8
1		0030	7	0.	0.1	0.0	1		0850	107	4.	1.6	0.2	1		1710	207	20.	23.8	2.8
1		0035	8	0.	0.1	0.0	1		0855	108	4.	1.6	0.2	1		1715	208	20.	23.7	2.7
1		0040	9	0.	0.1	0.0	1		0900	109	4.	1.6	0.2	1		1720	209	20.	23.6	2.7
1		0045	10	0.	0.1	0.0	1		0905	110	4.	1.7	0.2	1		1725	210	20.	23.5	2.7
1		0050	11	0.	0.1	0.0	1		0910	111	4.	1.7	0.2	1		1730	211	20.	23.4	2.7
1		0055	12	0.	0.2	0.0	1		0915	112	4.	1.7	0.2	1		1735	212	20.	23.3	2.7
1		0100	13	0.	0.2	0.0	1		0920	113	4.	1.7	0.2	1		1740	213	20.	23.2	2.7
1		0105	14	0.	0.2	0.0	1		0925	114	4.	1.8	0.2	1		1745	214	20.	23.1	2.7
1		0110	15	1.	0.2	0.0	1		0930	115	4.	1.8	0.2	1		1750	215	20.	23.0	2.7
1		0115	16	1.	0.2	0.0	1		0935	116	4.	1.8	0.2	1		1755	216	20.	22.9	2.6
1		0120	17	1.	0.2	0.0	1		0940	117	4.	1.9	0.2	1		1800	217	20.	22.8	2.6
1		0125	18	1.	0.3	0.0	1		0945	118	4.	1.9	0.2	1		1805	218	20.	22.6	2.6
1		0130	19	1.	0.3	0.0	1		0950	119	5.	1.9	0.2	1		1810	219	20.	22.5	2.6
1		0135	20	1.	0.3	0.0	1		0955	120	5.	1.9	0.2	1		1815	220	20.	22.4	2.6
1		0140	21	1.	0.3	0.0	1		1000	121	5.	2.0	0.2	1		1820	221	20.	22.3	2.6
1		0145	22	1.	0.3	0.0	1		1005	122	5.	2.0	0.2	1		1825	222	20.	22.2	2.6
1		0150	23	1.	0.3	0.0	1		1010	123	5.	2.0	0.2	1		1830	223	20.	22.1	2.6
1		0155	24	1.	0.4	0.0	1		1015	124	5.	2.1	0.2	1		1835	224	20.	22.0	2.6
1		0200	25	1.	0.4	0.0	1		1020	125	5.	2.1	0.3	1		1840	225	20.	21.9	2.5
1		0205	26	1.	0.4	0.0	1		1025	126	5.	2.2	0.3	1		1845	226	20.	21.8	2.5
1		0210	27	1.	0.4	0.0	1		1030	127	5.	2.2	0.3	1		1850	227	20.	21.7	2.5
1		0215	28	1.	0.4	0.1	1		1035	128	5.	2.2	0.3	1		1855	228	20.	21.5	2.5
1		0220	29	1.	0.4	0.1	1		1040	129	5.	2.3	0.3	1		1900	229	20.	21.4	2.5
1		0225	30	1.	0.5	0.1	1		1045	130	6.	2.4	0.3	1		1905	230	20.	21.3	2.5
1		0230	31	1.	0.5	0.1	1		1050	131	6.	2.4	0.3	1		1910	231	20.	21.2	2.5
1		0235	32	1.	0.5	0.1	1		1055	132	6.	2.5	0.3	1		1915	232	20.	21.1	2.5
1		0240	33	1.	0.5	0.1	1		1100	133	6.	2.6	0.3	1		1920	233	20.	21.0	2.4
1		0245	34	1.	0.5	0.1	1		1105	134	6.	2.7	0.3	1		1925	234	20.	20.9	2.4
1		0250	35	1.	0.5	0.1	1		1110	135	7.	2.8	0.3	1		1930	235	20.	20.8	2.4
1		0255	36	1.	0.5	0.1	1		1115	136	7.	2.9	0.3	1		1935	236	20.	20.7	2.4
1		0300	37	1.	0.5	0.1	1		1120	137	7.	3.0	0.4	1		1940	237	20.	20.6	2.4
1		0305	38	1.	0.6	0.1	1		1125	138	7.	3.1	0.4	1		1945	238	20.	20.5	2.4
1		0310	39	1.	0.6	0.1	1		1130	139	8.	3.2	0.4	1		1950	239	20.	20.3	2.4
1		0315	40	1.	0.6	0.1	1		1135	140	8.	3.5	0.4	1		1955	240	20.	20.2	2.4
1		0320	41	1.	0.6	0.1	1		1140	141	10.	4.2	0.5	1		2000	241	20.	20.1	2.3
1		0325	42	1.	0.6	0.1	1		1145	142	13.	5.5	0.7	1		2005	242	20.	20.0	2.3
1		0330	43	1.	0.6	0.1	1		1150	143	18.	7.5	0.9	1		2010	243	20.	19.9	2.3
1		0335	44	1.	0.6	0.1	1		1155	144	20.	10.7	1.3	1		2015	244	20.	19.8	2.3
1		0340	45	2.	0.6	0.1	1		1200	145	20.	15.3	1.8	1		2020	245	20.	19.7	2.3
1		0345	46	2.	0.6	0.1	1		1205	146	20.	20.3	2.4	1		2025	246	20.	19.5	2.3
1		0350	47	2.	0.7	0.1	1		1210	147	20.	24.0	2.8	1		2030	247	20.	19.4	2.3
1		0355	48	2.	0.7	0.1	1		1215	148	20.	26.0	3.0	1		2035	248	20.	19.3	2.3
1		0400	49	2.	0.7	0.1	1		1220	149	20.	26.9	3.1	1		2040	249	20.	19.2	2.2
1		0405	50	2.	0.7	0.1	1		1225	150	20.	27.3	3.1	1		2045	250	20.	19.1	2.2
1		0410	51	2.	0.7	0.1	1		1230	151	20.	27.5	3.2	1		2050	251	20.	19.0	2.2
1		0415	52	2.	0.7	0.1	1		1235	152	20.	27.6	3.2	1		2055	252	20.	18.8	2.2
1		0420	53	2.	0.8	0.1	1		1240	153	20.	27.6	3.2	1		2100	253	20.	18.7	2.2
1		0425	54	2.	0.8	0.1	1		1245	154	20.	27.7	3.2	1		2105	254	20.	18.6	2.2
1		0430	55	2.	0.8	0.1	1		1250	155	20.	27.7	3.2	1		2110	255	20.	18.5	2.2
1		0435	56	2.	0.8	0.1	1		1255	156	20.	27.7	3.2	1		2115	256	20.	18.4	2.1
1		0440	57	2.	0.8	0.1	1		1300	157	20.	27.7	3.2	1		2120	257	20.	18.3	2.1
1		0445	58	2.	0.8	0.1	1		1305	158	20.	27.7	3.2	1		2125	258	20.	18.1	2.1
1		0450	59	2.	0.8	0.1	1		1310	159	20.	27.7	3.2	1		2130	259	20.	18.0	2.1
1		0455	60	2.	0.9	0.1	1		1315	160	20.	27.7	3.2	1		2135	260	20.	17.9	2.1
1		0500	61	2.	0.9	0.1	1		1320	161	20.	27.6	3.2	1		2140	261	20.	17.8	2.1
1		0505	62	2.	0.9	0.1	1		1325	162	20.	27.6	3.2	1		2145	262	20.	17.7	2.1
1		0510	63	2.	0.9	0.1	1		1330	163	20.	27.6	3.2	1		2150	263	20.	17.6	2.1
1		0515	64	2.	0.9	0.1	1		1335	164	20.	27.5	3.2	1		2155	264	20.	17.4	2.0
1		0520	65	2.	0.9	0.1	1		1340	165	20.	27.5	3.2	1		2200	265	20.	17.3	2.0
1		0525	66	2.	0.9	0.1	1		1345	166	20.	27.4	3.2	1		2205	266	20.	17.2	2.0
1		0530	67	2.	1.0	0.1	1		1350	167	20.	27.3	3.1	1		2210	267	20.	17.1	2.0
1		0535	68	2.	1.0	0.1	1		1355	168	20.	27.3	3.1	1		2215	268	20.	17.0	2.0
1		0540	69	2.	1.0	0.1	1		1400	169	20.	27.2	3.1	1		2220	269	20.	16.9	2.0
1		0545	70	2.	1.0	0.1	1		1405	170	20.	27.1	3.1	1		2225	270	20.	16.7	2.0
1		0550	71	2.	1.0	0.1	1		1410	171	20.	27.1	3.1	1		2230	271	20.	16.6	2.0
1		0555	72	2.	1.0	0.1	1		1415	172	20.	27.0	3.1	1		2235	272	20.	16.5	1.9
1		0600	73	2.	1.0	0.1	1		1420	173	20.	26.9	3.1	1		2240	273	20.	16.4	1.9
1		0605	74	2.	1.0	0.1	1		1425	174	20.	26.9	3.1	1		2245	274	20.	16.3	1.9
1		0610	75	3.	1.1	0.1	1		1430	175	20.	26.8	3.1	1		2250	275	20.	16.2	1.9
1		0615	76	3.	1.1	0.1	1		1435	176	20.	26.7	3.1	1		2255	276	20.	16.0	1.9
1		0620	77	3.	1.1	0.1	1		1440	177	20.	26.6	3.1	1		2300	277	20.	15.9	1.9
1		0625	78	3.	1.1	0.1	1		1445	178	20.	26.5	3.1	1		2305	278	20.	15.8	1.9
1		0630	79	3.	1.1	0.1	1		1450	179	20.	26.4	3.0	1		2310	279	20.	15.7	1.8
1		0635	80	3.	1.1	0.1	1		1455	180	20.	26.4	3.0	1		2315	280	20.	15.6	1.8
1		0640	81	3.	1.2	0.1	1		1500	181	20.	26.3	3.0	1		2320	281	20.	15.5	1.8
1		0645	82	3.	1.2	0.1	1		1505	182	20.	26.2	3.0	1		2325	282	20.	15.3	1.8
1		0650	83	3.	1.2	0.1	1		1510	183	20.	26.1	3.0	1		2330	283	20.	15.2	1.8
1		0655	84	3.	1.2	0.1	1		1515	184	20.	26.0	3.0	1		2335	284	20.	15.1	1.8
1		0700	85	3.	1.2	0.1	1		1520	185	20.	25.9	3.0	1		2340	285	20.	15.0	1.8
1		0705	86	3.	1.2	0.1	1		1525	186	20.	25.8	3.0	1		2345	286	20.	14.9	1.7
1		0710	87	3.	1.2	0.1	1		1530	187	20.	25.7	3.0	1		2350	287	20.	14.8	1.7
1		0715	88	3.	1.3	0.2	1		1535	188	20.	25.6	3.0	1		2355	288	20.	14.6	1.7
1		0720	89	3.	1.3	0.2	1		1540	189	20.	25.5	2.9	2		0000	289	20.	14.5	1.7
1		0725	90	3.	1.3	0.2	1		1545	190	20.	25.4	2.9	2		0005	290	20.	14.4	1.7
1		0730	91	3.	1.3	0.2	1		1550	191	20.	25.3	2.9	2		0010	291	20.	14.3	1.7
1		0735	92	3.	1.3	0.2	1		1555	192	20.	25.3	2.9	2		0015	292	20.	14.1	1.7
1		0740	93	3.	1.3	0.2	1		1600	193	20.	25.2	2.9	2		0020	293	20.	14.0	1.6
1		0745	94	3.	1.3	0.2	1		1605	194	20.	25.1	2.9	2		0025	294	20.	13.9	1.6
1		0750	95	3.	1.4	0.2	1		1610	195	20.	25.0	2.9	2		0030	295	20.	13.7	1.6
1		0755	96	3.	1.4	0.2	1		1615	196	20.	24.9	2.9	2		0035	296	20.	13.6	1.6
1		0800	97	3.	1.4	0.2	1		1620	197	20.	24.8	2.9	2		0040	297	20.	13.4	1.6
1		0805	98	3.	1.4	0.2	1		1625	198	20.	24.7	2.9	2		0045	298	20.	13.3	1.6
1		0810	99	3.	1.4	0.2	1		1630	199	20.	24.6	2.8	2		0050	299	20.	13.2	1.6
1		0815	100	3.	1.4	0.2	1		1635	200	20.	24.5	2.8	2		0055	300	20.	13.0	1.5

PEAK FLOW	TIME		MAXIMUM AVERAGE FLOW 6-HR	24-HR	72-HR	24.92-HR
(CFS)	(HR)					
		(CFS)				
20.	11.92		20.	12.	12.	12.
		(INCHES)	0.547	1.344	1.345	1.345
		(AC-FT)	10.	24.	24.	24.

PEAK STORAGE	TIME	MAXIMUM AVERAGE STORAGE 6-HR	24-HR	72-HR	24.92-HR
(AC-FT)	(HR)				
28.	12.92	26.	12.	12.	12.

PEAK STAGE	TIME	MAXIMUM AVERAGE STAGE 6-HR	24-HR	72-HR	24.92-HR
(FEET)	(HR)				
3.19	13.00	2.97	1.43	1.37	1.37

CUMULATIVE AREA = 0.34 SQ MI

183 KK RER47B

*****51ST AVENUE STORM DRAIN*****

ROUTE THE OUTFLOW FROM THE ELLIOT ROAD BASIN FROM ELLIOT ROAD TO DOBBINS ROAD

HYDROGRAPH ROUTING DATA

186 RK KINEMATIC WAVE STREAM ROUTING

L	7920.	CHANNEL LENGTH
S	0.0034	SLOPE
N	0.013	CHANNEL ROUGHNESS COEFFICIENT
CA	0.00	CONTRIBUTING AREA
SHAPE	CIRC	CHANNEL SHAPE
WD	3.00	BOTTOM WIDTH OR DIAMETER
Z	0.00	SIDE SLOPE
NDXMIN	2	MINIMUM NUMBER OF DX INTERVALS

***

COMPUTED KINEMATIC PARAMETERS
VARIABLE TIME STEP
(DT SHOWN IS A MINIMUM)

ELEMENT	ALPHA	M	DT (MIN)	DX (FT)	PEAK (CFS)	TIME TO PEAK (MIN)	VOLUME (IN)	MAXIMUM CELERITY (FPS)
MAIN	4.33	1.25	4.61	1980.00	20.00	1498.50	1.32	7.35

CONTINUITY SUMMARY (AC-FT) - INFLOW=0.2439E+02 EXCESS=0.0000E+00 OUTFLOW=0.2402E+02 BASIN STORAGE=0.4286E+00 PERCENT ERROR= -0.2

INTERPOLATED TO SPECIFIED COMPUTATION INTERVAL

MAIN	4.33	1.25	5.00	20.00	1495.00	1.32

*** *** *** *** ***

HYDROGRAPH AT STATION RER47B

PEAK FLOW	TIME		MAXIMUM AVERAGE FLOW 6-HR	24-HR	72-HR	24.92-HR
(CFS)	(HR)					
		(CFS)				
20.	12.25		20.	12.	12.	12.
		(INCHES)	0.547	1.319	1.319	1.319
		(AC-FT)	10.	24.	24.	24.

CUMULATIVE AREA = 0.34 SQ MI

```
*** *** *** *** *** *** *** *** *** *** *** *** *** *** *** *** *** *** *** *** *** *** *** *** *** *** *** *** *** *** *** *** ***

              *************
              *           *
 187 KK       *   CDR51   *
              *           *
              *************
                            COMBINE ROUTED FLOW FROM SUB-BASIN DR43C AND ER47B TO RUNOFF FROM SUB-BASIN
                            OA51B - THIS COMBINATION NOW AT DOBBINS ROAD AND 51ST AVE

 190 HC          HYDROGRAPH COMBINATION
                       ICOMP           3  NUMBER OF HYDROGRAPHS TO COMBINE

                                                              ***
MANE2 NPLAN,NSTM       1      0
MANE2 NPLAN,NSTM       1      0
      ***             ***            ***            ***            ***

                           HYDROGRAPH AT STATION    CDR51

  PEAK FLOW      TIME                             MAXIMUM AVERAGE FLOW
                                         6-HR        24-HR        72-HR      24.92-HR
+   (CFS)        (HR)
                           (CFS)
+     60.       24.92                     60.          33.          32.          32.
                          (INCHES)       0.243        0.540        0.540        0.540
                          (AC-FT)         30.          66.          66.          66.

                         CUMULATIVE AREA =      2.29 SQ MI

*** *** *** *** *** *** *** *** *** *** *** *** *** *** *** *** *** *** *** *** *** *** *** *** *** *** *** *** *** *** *** *** ***

              *************
              *           *
 191 KK       *   RDR51A  *
              *           *
              *************
                            *********************51ST AVENUE STORM DRAIN*******************************
                            ROUTE FLOWS ALONG 51ST AVE TO A BASIN NEAR 51ST AND BASLINE
                            CROSS-SECTION REVISED TO REFLECT TO USE STORM DRAIN

                 HYDROGRAPH ROUTING DATA

 195 RK          KINEMATIC WAVE STREAM ROUTING
                          L        2937.  CHANNEL LENGTH
                          S       0.0053  SLOPE
                          N        0.013  CHANNEL ROUGHNESS COEFFICIENT
                         CA         0.00  CONTRIBUTING AREA
                      SHAPE         CIRC  CHANNEL SHAPE
                         WD         5.00  BOTTOM WIDTH OR DIAMETER
                          Z         0.00  SIDE SLOPE
                     NDXMIN            2  MINIMUM NUMBER OF DX INTERVALS
                                                              ***
                                  COMPUTED KINEMATIC PARAMETERS
                                       VARIABLE TIME STEP
                                      (DT SHOWN IS A MINIMUM)

             ELEMENT    ALPHA       M         DT        DX       PEAK    TIME TO    VOLUME   MAXIMUM
                                                                         PEAK                CELERITY
                                             (MIN)      (FT)     (CFS)    (MIN)      (IN)     (FPS)

               MAIN       5.89     1.25      1.43     979.00     60.26   1495.64     0.54     11.71

CONTINUITY SUMMARY (AC-FT) - INFLOW=0.6600E+02  EXCESS=0.0000E+00 OUTFLOW=0.6576E+02 BASIN STORAGE=0.2559E+00 PERCENT ERROR=   0.0

                                  INTERPOLATED TO SPECIFIED COMPUTATION INTERVAL

               MAIN       5.89     1.25      5.00                60.15   1495.00     0.54
      ***             ***            ***            ***            ***

                           HYDROGRAPH AT STATION    RDR51A

  PEAK FLOW      TIME                             MAXIMUM AVERAGE FLOW
                                         6-HR        24-HR        72-HR      24.92-HR
+   (CFS)        (HR)
                           (CFS)
+     60.       24.92                     60.          33.          32.          32.
                          (INCHES)       0.243        0.538        0.538        0.538
                          (AC-FT)         30.          66.          66.          66.

                         CUMULATIVE AREA =      2.29 SQ MI
```

```
*** *** *** *** *** *** *** *** *** *** *** *** *** *** *** *** *** *** *** *** *** *** *** *** *** *** *** *** *** *** *** *** ***

              *************
              *           *
 196 KK       *   SM51C   *
              *           *
              *************
                            SUB-BASIN SM51C
                            24-HOUR SCS TYPE II RAINFALL WAS USED TO FIND TC & R FOR THIS BASIN
                            THIS BASIN USED RAINFALL REDUCTION FACTOR OF  .934
                              L = 1.29  Kb = .045  Adj. Slope =   12.0

               SUBBASIN RUNOFF DATA

 201 BA          SUBBASIN CHARACTERISTICS
                       TAREA        0.51  SUBBASIN AREA

                 PRECIPITATION DATA

  32 PB                STORM        3.92  BASIN TOTAL PRECIPITATION

  32 PI            INCREMENTAL PRECIPITATION PATTERN
                      0.00     0.00     0.00     0.00     0.00     0.00     0.00     0.00     0.00     0.00
                      0.00     0.00     0.00     0.00     0.00     0.00     0.00     0.00     0.00     0.00
                      0.00     0.00     0.00     0.00     0.00     0.00     0.00     0.00     0.00     0.00
                      0.00     0.00     0.00     0.00     0.00     0.00     0.00     0.00     0.00     0.00
                      0.00     0.00     0.00     0.00     0.00     0.00     0.00     0.00     0.00     0.00
                      0.00     0.00     0.00     0.00     0.00     0.00     0.00     0.00     0.00     0.00
                      0.00     0.00     0.00     0.00     0.00     0.00     0.00     0.00     0.00     0.00
                      0.00     0.00     0.00     0.00     0.00     0.00     0.00     0.00     0.00     0.00
                      0.00     0.00     0.00     0.00     0.00     0.00     0.00     0.00     0.00     0.00
                      0.00     0.00     0.00     0.00     0.00     0.00     0.00     0.00     0.00     0.00
                      0.00     0.00     0.00     0.00     0.00     0.00     0.00     0.00     0.00     0.00
                      0.00     0.00     0.00     0.00     0.00     0.00     0.00     0.00     0.00     0.00
                      0.00     0.00     0.00     0.00     0.00     0.00     0.00     0.01     0.00     0.01
                      0.01     0.01     0.01     0.01     0.01     0.01     0.01     0.01     0.03     0.03
                      0.03     0.09     0.09     0.09     0.01     0.01     0.01     0.01     0.01     0.01
                      0.01     0.01     0.01     0.01     0.01     0.01     0.00     0.00     0.00     0.00
                      0.00     0.00     0.00     0.00     0.00     0.00     0.00     0.00     0.00     0.00
                      0.00     0.00     0.00     0.00     0.00     0.00     0.00     0.00     0.00     0.00
                      0.00     0.00     0.00     0.00     0.00     0.00     0.00     0.00     0.00     0.00
                      0.00     0.00     0.00     0.00     0.00     0.00     0.00     0.00     0.00     0.00
                      0.00     0.00     0.00     0.00     0.00     0.00     0.00     0.00     0.00     0.00
                      0.00     0.00     0.00     0.00     0.00     0.00     0.00     0.00     0.00     0.00
                      0.00     0.00     0.00     0.00     0.00     0.00     0.00     0.00     0.00     0.00
                      0.00     0.00     0.00     0.00     0.00     0.00     0.00     0.00     0.00     0.00
                      0.00     0.00     0.00     0.00     0.00     0.00     0.00     0.00     0.00     0.00
                      0.00     0.00     0.00     0.00     0.00     0.00     0.00     0.00     0.00     0.00
                      0.00     0.00     0.00     0.00     0.00     0.00     0.00     0.00     0.00     0.00
                      0.00     0.00     0.00     0.00     0.00     0.00     0.00     0.00     0.00     0.00
                      0.00     0.00     0.00     0.00     0.00     0.00     0.00     0.00

 202 LG          GREEN AND AMPT LOSS RATE
                       STRTL        0.29  STARTING LOSS
                         DTH        0.25  MOISTURE DEFICIT
                        PSIF        5.20  WETTING FRONT SUCTION
                       XKSAT        0.29  HYDRAULIC CONDUCTIVITY
                       RTIMP       17.00  PERCENT IMPERVIOUS AREA

 203 UC          CLARK UNITGRAPH
                          TC        1.05  TIME OF CONCENTRATION
                           R        0.70  STORAGE COEFFICIENT

 204 UA          ACCUMULATED-AREA VS. TIME,  11 ORDINATES
                    0.0       5.0      16.0      30.0      65.0      77.0      84.0      90.0      94.0      97.0
                  100.0
                                                              ***

                                           UNIT HYDROGRAPH PARAMETERS
                                      CLARK   TC=  1.05 HR,          R=  0.70 HR
                                      SNYDER  TP=  0.58 HR,         CP=  0.46

                                                UNIT HYDROGRAPH
                                           51 END-OF-PERIOD ORDINATES
                    9.       33.       67.      113.      194.      257.      266.      263.      255.      244.
                  229.      214.      199.      180.      160.      142.      126.      112.      100.       89.
                   79.       70.       62.       55.       49.       44.       39.       34.       31.       27.
                   24.       21.       19.       17.       15.       13.       12.       11.        9.        8.
                    7.        7.        6.        5.        5.        4.        4.        3.        3.        3.
                    2.

      ***             ***            ***            ***            ***

                           HYDROGRAPH AT STATION    SM51C

   TOTAL RAINFALL =     3.92, TOTAL LOSS =     2.28, TOTAL EXCESS =     1.64

 PEAK FLOW      TIME                             MAXIMUM AVERAGE FLOW
                                        6-HR        24-HR        72-HR      24.92-HR
```

```
 +   (CFS)        (HR)
                                (CFS)
 +     327.      12.42                       79.          22.          22.          22.
                               (INCHES)    1.441        1.633        1.635        1.635
                               (AC-FT)       39.          45.          45.          45.

                                CUMULATIVE AREA =     0.51 SQ MI
```

*** ***

```
                 **************
                 *            *
  206 KK         *    SM51R   *
                 *            *
                 **************
                                  DIVERT RETENTION VOLUME

       DT          DIVERSION
                        ISTAD       RET51C  DIVERSION HYDROGRAPH IDENTIFICATION
                       DSTRMX        23.00  MAXIMUM VOLUME TO BE DIVERTED

       DI              INFLOW         0.00    1000.00  10000.00

       DQ        DIVERTED FLOW        0.00    1000.00  10000.00
                                                                          ***

           ***              ***               ***               ***               ***

                                  DIVERSION HYDROGRAPH   RET51C

  PEAK FLOW       TIME                               MAXIMUM AVERAGE FLOW
                                              6-HR         24-HR        72-HR        24.92-HR
 +   (CFS)        (HR)
                                (CFS)
 +     327.      12.42                       44.          12.          11.          11.
                               (INCHES)    0.792        0.844        0.844        0.844
                               (AC-FT)       22.          23.          23.          23.

                                CUMULATIVE AREA =     0.51 SQ MI

           ***              ***               ***               ***               ***

                                  HYDROGRAPH AT STATION    SM51R

  PEAK FLOW       TIME                               MAXIMUM AVERAGE FLOW
                                              6-HR         24-HR        72-HR        24.92-HR
 +   (CFS)        (HR)
                                (CFS)
 +     248.      12.92                       40.   -      11.          10.          10.
                               (INCHES)    0.737        0.791        0.791        0.791
                               (AC-FT)       20.          22.          22.          22.

                                CUMULATIVE AREA =     0.51 SQ MI
```

*** ***

```
                 **************
                 *            *
  211 KK         *    C51SM   *
                 *            *
                 **************
                                  COMBINE SUBARAREA SM51C WITH 51ST AVE STORM DRAIN

  213 HC           HYDROGRAPH COMBINATION
                         ICOMP               2  NUMBER OF HYDROGRAPHS TO COMBINE
                                                                          ***
 MANE2 NPLAN,NSTM          1        0
           ***              ***               ***               ***               ***

                                  HYDROGRAPH AT STATION    C51SM

  PEAK FLOW       TIME                               MAXIMUM AVERAGE FLOW
                                              6-HR         24-HR        72-HR        24.92-HR
 +   (CFS)        (HR)
                                (CFS)
 +     308.      12.92                      100.          44.          42.          42.
                               (INCHES)    0.333        0.584        0.584        0.584
                               (AC-FT)       50.          87.          87.          87.

                                CUMULATIVE AREA =     2.80 SQ MI
```

*** ***

```
                 **************
                 *            *
  214 KK         *   RDR51B   *
                 *            *
                 **************
                        ***********PROPOSED 51ST AVENUE STORM DRAIN*********************************
                        ROUTE FLOWS ALONG 51ST AVE TO A BASIN NEAR 51ST AND BASLINE
                        CROSS-SECTION REVISED TO REFLECT TO USE STORM DRAIN

           HYDROGRAPH ROUTING DATA

  218 RK           KINEMATIC WAVE STREAM ROUTING
                            L       2750.  CHANNEL LENGTH
                            S      0.0053  SLOPE
                            N       0.013  CHANNEL ROUGHNESS COEFFICIENT
                           CA        0.00  CONTRIBUTING AREA
                        SHAPE        TRAP  CHANNEL SHAPE
                           WD       70.00  BOTTOM WIDTH OR DIAMETER
                            Z        0.00  SIDE SLOPE
                       NDXMIN           2  MINIMUM NUMBER OF DX INTERVALS

                                                                   ***
                                 COMPUTED KINEMATIC PARAMETERS
                                       VARIABLE TIME STEP
                                     (DT SHOWN IS A MINIMUM)

       ELEMENT    ALPHA       M          DT         DX       PEAK     TIME TO     VOLUME    MAXIMUM
                                                                        PEAK                CELERITY
                                        (MIN)      (FT)      (CFS)     (MIN)       (IN)      (FPS)

        MAIN       0.49     1.67        1.57     916.67     303.23     777.74      0.58      10.77

CONTINUITY SUMMARY (AC-FT) - INFLOW=0.8725E+02  EXCESS=0.0000E+00 OUTFLOW=0.8661E+02 BASIN STORAGE=0.7242E+00 PERCENT ERROR=  -0.1

                              INTERPOLATED TO SPECIFIED COMPUTATION INTERVAL

        MAIN       0.49     1.67        5.00                299.25     780.00      0.58
     ***            ***            ***             ***             ***

                        HYDROGRAPH AT STATION    RDR51B

  PEAK FLOW       TIME                               MAXIMUM AVERAGE FLOW
                                              6-HR         24-HR        72-HR        24.92-HR
 +   (CFS)        (HR)
                                (CFS)
 +     299.      13.00                      100.          44.          42.          42.
                               (INCHES)    0.333        0.578        0.578        0.578
                               (AC-FT)       50.          86.          86.          86.

                                CUMULATIVE AREA =     2.80 SQ MI
```

*** ***

```
                 **************
                 *            *
  219 KK         *   BRBASN   *
                 *            *
                 **************
                        *****************PROPOSED DETENTION BASIN IN SUB-BASIN BR51C*****************
                        DETENTION BASIN AT THE BASELINE AND 51ST AVE INTERSECTION.

                        BASIN HAS 10 AC TOP, 7.7 AC BOTTOM AND IS 8 FT DEEP WITH 5:1 SIDE SLOPES

           HYDROGRAPH ROUTING DATA

  224 RS           STORAGE ROUTING
                        NSTPS           1  NUMBER OF SUBREACHES
                         ITYP        ELEV  TYPE OF INITIAL CONDITION
                       RSVRIC        0.00  INITIAL CONDITION
                            X        0.00 WORKING R AND D COEFFICIENT

  225 SA            AREA        7.7       8.0       8.3       8.6       8.9       9.2       9.5       9.8      10.0

  226 SQ       DISCHARGE         0.       50.       50.       50.       50.       50.       50.       50.       50.

  227 SE       ELEVATION       0.00      1.00      2.00      3.00      4.00      5.00      6.00      7.00      8.00
                                                                   ***

                                  COMPUTED STORAGE-ELEVATION DATA

       STORAGE        0.00      7.85     16.00     24.45     33.20     42.25     51.60     61.25     71.15
     ELEVATION        0.00      1.00      2.00      3.00      4.00      5.00      6.00      7.00      8.00
```

```
          ***              ***              ***              ***              ***

                          HYDROGRAPH AT STATION    BRBASN

  PEAK FLOW      TIME                            MAXIMUM AVERAGE FLOW
                                        6-HR        24-HR        72-HR      24.92-HR
+   (CFS)        (HR)
                            (CFS)
+       50.     13.17                    50.         26.          25.          25.
                            (INCHES)    0.166       0.346        0.346        0.346
                            (AC-FT)      25.         52.          52.          52.

 PEAK STORAGE    TIME                          MAXIMUM AVERAGE STORAGE
                                        6-HR        24-HR        72-HR      24.92-HR
+  (AC-FT)       (HR)
       35.      24.92                    32.         14.          13.          13.

  PEAK STAGE     TIME                            MAXIMUM AVERAGE STAGE
                                        6-HR        24-HR        72-HR      24.92-HR
+   (FEET)       (HR)
      4.16      24.92                   3.81         1.67         1.61         1.61

                          CUMULATIVE AREA =     2.80 SQ MI


*** *** *** *** *** *** *** *** *** *** *** *** *** *** *** *** *** *** *** *** *** *** *** *** *** *** *** *** *** *** *** *** ***

                 **************
                 *            *
 228 KK          *    DBR51   *
                 *            *
                 **************

                         ************BASLINE ROAD STORM DRAIN***************************************
                         ROUTE FLOWS WEST ALONG BASELINE TO THE LAVEEN CONVEYANCE CHANNEL
                         CROSS-SECTION REVISED TO REFLECT TO USE STORM DRAIN

              HYDROGRAPH ROUTING DATA

 232 RK         KINEMATIC WAVE STREAM ROUTING
                           L        2640.  CHANNEL LENGTH
                           S       0.0030  SLOPE
                           N        0.013  CHANNEL ROUGHNESS COEFFICIENT
                          CA         0.00  CONTRIBUTING AREA
                       SHAPE         CIRC  CHANNEL SHAPE
                          WD         4.00  BOTTOM WIDTH OR DIAMETER
                           Z         0.00  SIDE SLOPE
                      NDXMIN            2  MINIMUM NUMBER OF DX INTERVALS

                                                    ***
                                    COMPUTED KINEMATIC PARAMETERS
                                         VARIABLE TIME STEP
                                       (DT SHOWN IS A MINIMUM)

                ELEMENT    ALPHA       M        DT        DX       PEAK    TIME TO    VOLUME    MAXIMUM
                                                                             PEAK               CELERITY
                                              (MIN)      (FT)     (CFS)    (MIN)       (IN)      (FPS)

               MAIN         4.27      1.25      1.73    880.00    50.22   1495.69     0.34       8.73

CONTINUITY SUMMARY (AC-FT) - INFLOW=0.5174E+02  EXCESS=0.0000E+00 OUTFLOW=0.5150E+02 BASIN STORAGE=0.2559E+00 PERCENT ERROR=   0.0

                                    INTERPOLATED TO SPECIFIED COMPUTATION INTERVAL

               MAIN         4.27      1.25      5.00              50.14   1495.00     0.34

          ***              ***              ***              ***              ***

                          HYDROGRAPH AT STATION    DBR51

  PEAK FLOW      TIME                            MAXIMUM AVERAGE FLOW
                                        6-HR        24-HR        72-HR      24.92-HR
+   (CFS)        (HR)
                            (CFS)
+       50.     24.92                    50.         26.          25.          25.
                            (INCHES)    0.166       0.344        0.344        0.344
                            (AC-FT)      25.         51.          51.          51.

                          CUMULATIVE AREA =     2.80 SQ MI


*** *** *** *** *** *** *** *** *** *** *** *** *** *** *** *** *** *** *** *** *** *** *** *** *** *** *** *** *** *** *** *** ***

                 **************
                 *            *
 233 KK          *    CB51D   *
```

```
                 *            *
                 **************
                              COMBINE ROUTED FLOW FROM COMPUTATION POINT CB51C AND FLOWS FROM 51ST
                              AVENUE STORM DRAIN PROPOSED BY THE LAVEEN ADMP

 236 HC           HYDROGRAPH COMBINATION
                       ICOMP           2  NUMBER OF HYDROGRAPHS TO COMBINE
                                                                        ***

MANE2 NPLAN,NSTM        1      0

          ***              ***              ***              ***              ***

                          HYDROGRAPH AT STATION    CB51D

  PEAK FLOW      TIME                            MAXIMUM AVERAGE FLOW
                                        6-HR        24-HR        72-HR      24.92-HR
+   (CFS)        (HR)
                            (CFS)
+      328.     13.58                   142.         54.          52.          52.
                            (INCHES)    0.284       0.429        0.429        0.429
                            (AC-FT)      71.        107.         107.         107.

                          CUMULATIVE AREA =     4.66 SQ MI


*** *** *** *** *** *** *** *** *** *** *** *** *** *** *** *** *** *** *** *** *** *** *** *** *** *** *** *** *** *** *** *** ***

                 **************
                 *            *
 237 KK          *   RB1591   *
                 *            *
                 **************

                              ROUTE FLOW FROM COMPUTATION POINT CB51C TO COMPUTATION POINT CB159C
                              MARICOPA DRAIN FROM 51ST AVE TO 59TH AVE.

              HYDROGRAPH ROUTING DATA

 240 RS           STORAGE ROUTING
                       NSTPS           3  NUMBER OF SUBREACHES
                        ITYP        ELEV  TYPE OF INITIAL CONDITION
                      RSVRIC       -1.00  INITIAL CONDITION
                           X        0.00  WORKING R AND D COEFFICIENT

 241 RC           NORMAL DEPTH CHANNEL
                         ANL       0.030  LEFT OVERBANK N-VALUE
                        ANCH       0.030  MAIN CHANNEL N-VALUE
                         ANR       0.030  RIGHT OVERBANK N-VALUE
                       RLNTH       5200.  REACH LENGTH
                         SEL      0.0011  ENERGY SLOPE
                       ELMAX         0.0  MAX. ELEV. FOR STORAGE/OUTFLOW CALCULATION

                                              CROSS-SECTION DATA
                        --- LEFT OVERBANK --- + ------ MAIN CHANNEL ------- + --- RIGHT OVERBANK ---
 243 RY        ELEVATION  1000.20   1000.10   1000.00    995.00    995.00   1000.00   1000.10   1000.20
 242 RX         DISTANCE     0.00     10.00     20.00     45.00    125.00    150.00    160.00    170.00
                                                            ***

                                      COMPUTED STORAGE-OUTFLOW-ELEVATION DATA

            STORAGE      0.00      2.66      5.41      8.24     11.17     14.19     17.29     20.49     23.77     27.14
            OUTFLOW      0.00     15.29     48.80     96.50    156.83    228.94    312.27    406.46    511.26    626.49
          ELEVATION    995.00    995.27    995.55    995.82    996.09    996.37    996.64    996.92    997.19    997.46

            STORAGE     30.61     34.16     37.80     41.53     45.35     49.26     53.26     57.35     61.53     66.25
            OUTFLOW    752.04    887.83   1033.83   1190.01   1356.39   1532.97   1719.81   1916.93   2124.40   2366.50
          ELEVATION    997.74    998.01    998.28    998.56    998.83    999.11    999.38    999.65    999.93   1000.20

          ***              ***              ***              ***              ***

                          HYDROGRAPH AT STATION    RB1591

  PEAK FLOW      TIME                            MAXIMUM AVERAGE FLOW
                                        6-HR        24-HR        72-HR      24.92-HR
+   (CFS)        (HR)
                            (CFS)
+      221.     14.33                   138.         50.          49.          49.
                            (INCHES)    0.275       0.403        0.403        0.403
                            (AC-FT)      68.        100.         100.         100.

 PEAK STORAGE    TIME                          MAXIMUM AVERAGE STORAGE
                                        6-HR        24-HR        72-HR      24.92-HR
+  (AC-FT)       (HR)
        5.      14.33                     3.          1.           1.           1.

  PEAK STAGE     TIME                            MAXIMUM AVERAGE STAGE
                                        6-HR        24-HR        72-HR      24.92-HR
+   (FEET)       (HR)
    996.34      14.33                  995.99       995.41       995.39       995.39
```

CUMULATIVE AREA = 4.66 SQ MI

*** ***

```
              *************
              *           *
244 KK        *  AVR55C   *
              *           *
              *************
```

SUB-BASIN AVR55C
24-HOUR SCS TYPE II RAINFALL WAS USED TO FIND TC & R FOR THIS BASIN
THIS BASIN USED RAINFALL REDUCTION FACTOR OF .934
L = .93 Kb = .051 Adj. Slope = 5.0

SUBBASIN RUNOFF DATA

249 BA SUBBASIN CHARACTERISTICS
TAREA 0.24 SUBBASIN AREA

PRECIPITATION DATA

32 PB STORM 3.92 BASIN TOTAL PRECIPITATION

32 PI INCREMENTAL PRECIPITATION PATTERN

0.00	0.00	0.00	0.00	0.00	0.00	0.00	0.00	0.00	0.00
0.00	0.00	0.00	0.00	0.00	0.00	0.00	0.00	0.00	0.00
0.00	0.00	0.00	0.00	0.00	0.00	0.00	0.00	0.00	0.00
0.00	0.00	0.00	0.00	0.00	0.00	0.00	0.00	0.00	0.00
0.00	0.00	0.00	0.00	0.00	0.00	0.00	0.00	0.00	0.00
0.00	0.00	0.00	0.00	0.00	0.00	0.00	0.00	0.00	0.00
0.00	0.00	0.00	0.00	0.00	0.00	0.00	0.00	0.00	0.00
0.00	0.00	0.00	0.00	0.00	0.00	0.00	0.00	0.00	0.00
0.00	0.00	0.00	0.00	0.00	0.00	0.00	0.00	0.00	0.00
0.00	0.00	0.00	0.00	0.00	0.00	0.00	0.00	0.00	0.00
0.00	0.00	0.00	0.00	0.00	0.00	0.00	0.00	0.00	0.00
0.00	0.00	0.00	0.00	0.00	0.00	0.00	0.00	0.00	0.00
0.00	0.00	0.00	0.00	0.00	0.00	0.00	0.01	0.00	0.01
0.01	0.01	0.01	0.01	0.01	0.01	0.01	0.01	0.03	0.03
0.03	0.09	0.09	0.09	0.01	0.01	0.01	0.01	0.01	0.01
0.01	0.01	0.01	0.01	0.01	0.01	0.00	0.00	0.00	0.00
0.00	0.00	0.00	0.00	0.00	0.00	0.00	0.00	0.00	0.00
0.00	0.00	0.00	0.00	0.00	0.00	0.00	0.00	0.00	0.00
0.00	0.00	0.00	0.00	0.00	0.00	0.00	0.00	0.00	0.00
0.00	0.00	0.00	0.00	0.00	0.00	0.00	0.00	0.00	0.00
0.00	0.00	0.00	0.00	0.00	0.00	0.00	0.00	0.00	0.00
0.00	0.00	0.00	0.00	0.00	0.00	0.00	0.00	0.00	0.00
0.00	0.00	0.00	0.00	0.00	0.00	0.00	0.00	0.00	0.00
0.00	0.00	0.00	0.00	0.00	0.00	0.00	0.00	0.00	0.00
0.00	0.00	0.00	0.00	0.00	0.00	0.00	0.00	0.00	0.00
0.00	0.00	0.00	0.00	0.00	0.00	0.00	0.00	0.00	0.00
0.00	0.00	0.00	0.00	0.00	0.00	0.00	0.00	0.00	0.00
0.00	0.00	0.00	0.00	0.00	0.00	0.00	0.00	0.00	0.00
0.00	0.00	0.00	0.00	0.00	0.00	0.00	0.00		

250 LG GREEN AND AMPT LOSS RATE

STRTL	0.25	STARTING LOSS
DTH	0.15	MOISTURE DEFICIT
PSIF	8.00	WETTING FRONT SUCTION
XKSAT	0.10	HYDRAULIC CONDUCTIVITY
RTIMP	29.00	PERCENT IMPERVIOUS AREA

251 UC CLARK UNITGRAPH

TC	1.21	TIME OF CONCENTRATION
R	0.97	STORAGE COEFFICIENT

252 UA ACCUMULATED-AREA VS. TIME, 11 ORDINATES

0.0	5.0	16.0	30.0	65.0	77.0	84.0	90.0	94.0	97.0
100.0									

***

UNIT HYDROGRAPH PARAMETERS
CLARK TC= 1.21 HR, R= 0.97 HR
SNYDER TP= 0.68 HR, CP= 0.41

UNIT HYDROGRAPH
68 END-OF-PERIOD ORDINATES

3.	9.	19.	31.	50.	77.	93.	96.	96.	95.
92.	89.	85.	81.	77.	72.	66.	60.	55.	51.
47.	43.	39.	36.	33.	30.	28.	26.	24.	22.
20.	18.	17.	15.	14.	13.	12.	11.	10.	9.
8.	8.	7.	7.	6.	5.	5.	5.	4.	4.
4.	3.	3.	3.	3.	2.	2.	2.	2.	2.
2.	1.	1.	1.	1.	1.	1.	1.		

*** *** *** *** ***

HYDROGRAPH AT STATION AVR55C

TOTAL RAINFALL = 3.92, TOTAL LOSS = 1.61, TOTAL EXCESS = 2.32

PEAK FLOW	TIME		MAXIMUM AVERAGE FLOW			
			6-HR	24-HR	72-HR	24.92-HR
+ (CFS)	(HR)					
		(CFS)				
+ 152.	12.58		51.	15.	14.	14.
		(INCHES)	1.958	2.297	2.298	2.298
		(AC-FT)	25.	30.	30.	30.

CUMULATIVE AREA = 0.24 SQ MI

*** ***

```
              *************
              *           *
254 KK        *  AVR55R   *
              *           *
              *************
```

DIVERT RETENTION VOLUME

DT DIVERSION

ISTAD	RET55C	DIVERSION HYDROGRAPH IDENTIFICATION
DSTRMX	25.60	MAXIMUM VOLUME TO BE DIVERTED

DI INFLOW 0.00 1000.00 10000.00

DQ DIVERTED FLOW 0.00 1000.00 10000.00

***

*** *** *** *** ***

DIVERSION HYDROGRAPH RET55C

PEAK FLOW	TIME		MAXIMUM AVERAGE FLOW			
			6-HR	24-HR	72-HR	24.92-HR
+ (CFS)	(HR)					
		(CFS)				
+ 152.	12.58		48.	13.	12.	12.
		(INCHES)	1.860	1.992	1.992	1.992
		(AC-FT)	24.	26.	26.	26.

CUMULATIVE AREA = 0.24 SQ MI

*** *** *** *** ***

HYDROGRAPH AT STATION AVR55R

PEAK FLOW	TIME		MAXIMUM AVERAGE FLOW			
			6-HR	24-HR	72-HR	24.92-HR
+ (CFS)	(HR)					
		(CFS)				
+ 23.	15.17		7.	2.	2.	2.
		(INCHES)	0.254	0.306	0.306	0.306
		(AC-FT)	3.	4.	4.	4.

CUMULATIVE AREA = 0.24 SQ MI

*** ***

```
              *************
              *           *
259 KK        *  RB1592   *
              *           *
              *************
```

ROUTE FLOW FROM SUBASIN AVR55C TO COMPUTATION POINT CB159C
ROUTING REVISED TO REFLECT URBANIZED CONDITIONS

HYDROGRAPH ROUTING DATA

262 RS STORAGE ROUTING

NSTPS	3	NUMBER OF SUBREACHES
ITYP	ELEV	TYPE OF INITIAL CONDITION
RSVRIC	-1.00	INITIAL CONDITION
X	0.00	WORKING R AND D COEFFICIENT

263 RC NORMAL DEPTH CHANNEL

ANL	0.035	LEFT OVERBANK N-VALUE
ANCH	0.035	MAIN CHANNEL N-VALUE
ANR	0.035	RIGHT OVERBANK N-VALUE
RLNTH	3600.	REACH LENGTH
SEL	0.0010	ENERGY SLOPE
ELMAX	0.0	MAX. ELEV. FOR STORAGE/OUTFLOW CALCULATION

CROSS-SECTION DATA

	--- LEFT OVERBANK --- +		------ MAIN CHANNEL -------			+ --- RIGHT OVERBANK ---		
265 RY ELEVATION	1004.00	1003.00	1002.00	999.00	999.00	1002.00	1003.00	1004.00

```
264 RX        DISTANCE      0.00     20.00     40.00     46.00     56.00     62.00     82.00    102.00
                                                                ***

                                              COMPUTED STORAGE-OUTFLOW-ELEVATION DATA

                    STORAGE      0.00      0.23      0.48      0.76      1.05      1.37      1.72      2.08      2.47      2.88
                    OUTFLOW      0.00      1.47      4.74      9.48     15.59     23.06     31.90     42.11     53.74     66.81
                  ELEVATION    999.00    999.26    999.53    999.79   1000.05   1000.32   1000.58   1000.84   1001.11   1001.37

                    STORAGE      3.32      3.78      4.30      5.03      5.99      7.17      8.59     10.24     12.11     14.22
                    OUTFLOW     81.36     97.43    117.30    141.65    170.49    204.92    245.87    294.20    350.69    416.13
                  ELEVATION   1001.63   1001.90   1002.16   1002.42   1002.68   1002.95   1003.21   1003.47   1003.74   1004.00

      ***             ***             ***             ***             ***

                         HYDROGRAPH AT STATION   RB1592

  PEAK FLOW      TIME                           MAXIMUM AVERAGE FLOW
                                       6-HR        24-HR       72-HR      24.92-HR
+   (CFS)        (HR)
                          (CFS)
+      13.      16.25                    6.           2.          2.           2.
                        (INCHES)      0.236        0.286       0.286        0.286
                        (AC-FT)          3.           4.          4.           4.

  PEAK STORAGE   TIME                          MAXIMUM AVERAGE STORAGE
                                       6-HR        24-HR       72-HR      24.92-HR
+  (AC-FT)       (HR)
         0.     16.17                    0.           0.          0.           0.

  PEAK STAGE     TIME                           MAXIMUM AVERAGE STAGE
                                       6-HR        24-HR       72-HR      24.92-HR
+   (FEET)       (HR)
     999.96     16.25                999.58       999.19      999.18       999.18

                        CUMULATIVE AREA =     0.24 SQ MI


*** *** *** *** *** *** *** *** *** *** *** *** *** *** *** *** *** *** *** *** *** *** *** *** *** *** *** *** *** *** *** *** *** ***


               **************
               *            *
266 KK         *   BR159C   *
               *            *
               **************
                      SUB-BASIN BR159C
                      24-HOUR SCS TYPE II RAINFALL WAS USED TO FIND TC & R FOR THIS BASIN
                      THIS BASIN USED RAINFALL REDUCTION FACTOR OF  .934
                        L = 1.68  Kb = .054  Adj. Slope =     8.0

            SUBBASIN RUNOFF DATA

271 BA        SUBBASIN CHARACTERISTICS
                 TAREA         0.68  SUBBASIN AREA

              PRECIPITATION DATA

 32 PB           STORM         3.92  BASIN TOTAL PRECIPITATION

 32 PI         INCREMENTAL PRECIPITATION PATTERN
                  0.00      0.00      0.00      0.00      0.00      0.00      0.00      0.00      0.00      0.00
                  0.00      0.00      0.00      0.00      0.00      0.00      0.00      0.00      0.00      0.00
                  0.00      0.00      0.00      0.00      0.00      0.00      0.00      0.00      0.00      0.00
                  0.00      0.00      0.00      0.00      0.00      0.00      0.00      0.00      0.00      0.00
                  0.00      0.00      0.00      0.00      0.00      0.00      0.00      0.00      0.00      0.00
                  0.00      0.00      0.00      0.00      0.00      0.00      0.00      0.00      0.00      0.00
                  0.00      0.00      0.00      0.00      0.00      0.00      0.00      0.00      0.00      0.00
                  0.00      0.00      0.00      0.00      0.00      0.00      0.00      0.00      0.00      0.00
                  0.00      0.00      0.00      0.00      0.00      0.00      0.00      0.00      0.00      0.00
                  0.00      0.00      0.00      0.00      0.00      0.00      0.00      0.00      0.00      0.00
                  0.00      0.00      0.00      0.00      0.00      0.00      0.00      0.00      0.00      0.00
                  0.00      0.00      0.00      0.00      0.00      0.00      0.00      0.00      0.00      0.00
                  0.00      0.00      0.00      0.00      0.00      0.00      0.00      0.01      0.00      0.01
                  0.01      0.01      0.01      0.01      0.01      0.01      0.01      0.01      0.03      0.03
                  0.03      0.09      0.09      0.09      0.01      0.01      0.01      0.01      0.01      0.01
                  0.01      0.01      0.01      0.01      0.01      0.01      0.00      0.00      0.00      0.00
                  0.00      0.00      0.00      0.00      0.00      0.00      0.00      0.00      0.00      0.00
                  0.00      0.00      0.00      0.00      0.00      0.00      0.00      0.00      0.00      0.00
                  0.00      0.00      0.00      0.00      0.00      0.00      0.00      0.00      0.00      0.00
                  0.00      0.00      0.00      0.00      0.00      0.00      0.00      0.00      0.00      0.00
                  0.00      0.00      0.00      0.00      0.00      0.00      0.00      0.00      0.00      0.00
                  0.00      0.00      0.00      0.00      0.00      0.00      0.00      0.00      0.00      0.00
                  0.00      0.00      0.00      0.00      0.00      0.00      0.00      0.00      0.00      0.00
                  0.00      0.00      0.00      0.00      0.00      0.00      0.00      0.00      0.00      0.00
                  0.00      0.00      0.00      0.00      0.00      0.00      0.00      0.00      0.00      0.00
                  0.00      0.00      0.00      0.00      0.00      0.00      0.00      0.00      0.00      0.00
                  0.00      0.00      0.00      0.00      0.00      0.00      0.00      0.00      0.00      0.00
                  0.00      0.00      0.00      0.00      0.00      0.00      0.00      0.00      0.00      0.00
                  0.00      0.00      0.00      0.00      0.00      0.00      0.00      0.00
```

```
272 LG        GREEN AND AMPT LOSS RATE
                 STRTL         0.17  STARTING LOSS
                   DTH         0.25  MOISTURE DEFICIT
                  PSIF         4.80  WETTING FRONT SUCTION
                 XKSAT         0.42  HYDRAULIC CONDUCTIVITY
                 RTIMP        28.00  PERCENT IMPERVIOUS AREA

273 UC        CLARK UNITGRAPH
                    TC         1.50  TIME OF CONCENTRATION
                     R         1.10  STORAGE COEFFICIENT

274 UA        ACCUMULATED-AREA VS. TIME,  11 ORDINATES
                   0.0        5.0       16.0       30.0       65.0       77.0       84.0       90.0       94.0       97.0
                 100.0

                                                           ***

                                                  UNIT HYDROGRAPH PARAMETERS
                                             CLARK   TC=  1.50 HR,        R=  1.10 HR
                                            SNYDER   TP=  0.82 HR,       CP=  0.43

                                                       UNIT HYDROGRAPH
                                                  78 END-OF-PERIOD ORDINATES
                   5.        17.        34.        56.        80.       117.       174.       216.       230.       234.
                 231.       228.       223.       217.       209.       200.       192.       184.       174.       161.
                 149.       139.       128.       119.       110.       102.        95.        88.        82.        76.
                  70.        65.        60.        56.        52.        48.        44.        41.        38.        35.
                  33.        30.        28.        26.        24.        22.        21.        19.        18.        17.
                  15.        14.        13.        12.        11.        11.        10.         9.         8.         8.
                   7.         7.         6.         6.         5.         5.         5.         4.         4.         4.
                   3.         3.         3.         3.         2.         2.         2.         2.

      ***             ***             ***             ***             ***

                         HYDROGRAPH AT STATION   BR159C

  TOTAL RAINFALL =     3.92, TOTAL LOSS =     2.06, TOTAL EXCESS =     1.86

  PEAK FLOW      TIME                           MAXIMUM AVERAGE FLOW
                                       6-HR        24-HR       72-HR      24.92-HR
+   (CFS)        (HR)
                          (CFS)
+     300.      12.67                  110.          33.         32.          32.
                        (INCHES)      1.511        1.843       1.844        1.844
                        (AC-FT)         54.          66.         66.          66.

                        CUMULATIVE AREA =     0.68 SQ MI


*** *** *** *** *** *** *** *** *** *** *** *** *** *** *** *** *** *** *** *** *** *** *** *** *** *** *** *** *** *** *** *** *** ***


               **************
               *            *
276 KK         *   BR159R   *
               *            *
               **************
                      DIVERT RETENTION VOLUME
                      RELAXED RETENTION VOLUME FROM 43.2 AC-FT

  DT          DIVERSION
                 ISTAD       RET159  DIVERSION HYDROGRAPH IDENTIFICATION
                DSTRMX        39.50  MAXIMUM VOLUME TO BE DIVERTED

  DI                INFLOW     0.00   1000.00  10000.00

  DQ         DIVERTED FLOW     0.00   1000.00  10000.00
                                                           ***

      ***             ***             ***             ***             ***

                         DIVERSION HYDROGRAPH   RET159

  PEAK FLOW      TIME                           MAXIMUM AVERAGE FLOW
                                       6-HR        24-HR       72-HR      24.92-HR
+   (CFS)        (HR)
                          (CFS)
+     300.      12.67                   73.          20.         19.          19.
                        (INCHES)      1.008        1.097       1.097        1.097
                        (AC-FT)         36.          40.         40.          40.

                        CUMULATIVE AREA =     0.68 SQ MI

      ***             ***             ***             ***             ***

                         HYDROGRAPH AT STATION   BR159R

  PEAK FLOW      TIME                           MAXIMUM AVERAGE FLOW
                                       6-HR        24-HR       72-HR      24.92-HR
+   (CFS)        (HR)
                          (CFS)
```

+ 193.	13.67		48.	14.	13.	13.
		(INCHES)	0.666	0.746	0.746	0.746
		(AC-FT)	24.	27.	27.	27.

CUMULATIVE AREA = 0.68 SQ MI

*** ***

```
              **************
              *            *
282 KK        *    VR59C   *
              *            *
              **************
```

SUB-BASIN VR59C
24-HOUR SCS TYPE II RAINFALL WAS USED TO FIND TC & R FOR THIS BASIN
THIS BASIN USED RAINFALL REDUCTION FACTOR OF .934
L = .75 Kb = .083 Adj. Slope = 4.0

SUBBASIN RUNOFF DATA

287 BA SUBBASIN CHARACTERISTICS
TAREA 0.23 SUBBASIN AREA

PRECIPITATION DATA

32 PB STORM 3.92 BASIN TOTAL PRECIPITATION

32 PI INCREMENTAL PRECIPITATION PATTERN

0.00	0.00	0.00	0.00	0.00	0.00	0.00	0.00	0.00	0.00
0.00	0.00	0.00	0.00	0.00	0.00	0.00	0.00	0.00	0.00
0.00	0.00	0.00	0.00	0.00	0.00	0.00	0.00	0.00	0.00
0.00	0.00	0.00	0.00	0.00	0.00	0.00	0.00	0.00	0.00
0.00	0.00	0.00	0.00	0.00	0.00	0.00	0.00	0.00	0.00
0.00	0.00	0.00	0.00	0.00	0.00	0.00	0.00	0.00	0.00
0.00	0.00	0.00	0.00	0.00	0.00	0.00	0.00	0.00	0.00
0.00	0.00	0.00	0.00	0.00	0.00	0.00	0.00	0.00	0.00
0.00	0.00	0.00	0.00	0.00	0.00	0.00	0.00	0.00	0.00
0.00	0.00	0.00	0.00	0.00	0.00	0.00	0.00	0.00	0.00
0.00	0.00	0.00	0.00	0.00	0.00	0.00	0.00	0.00	0.00
0.00	0.00	0.00	0.00	0.00	0.00	0.00	0.00	0.00	0.00
0.00	0.00	0.00	0.00	0.00	0.00	0.00	0.01	0.00	0.01
0.01	0.01	0.01	0.01	0.01	0.01	0.01	0.01	0.03	0.03
0.03	0.09	0.09	0.09	0.01	0.01	0.01	0.01	0.01	0.01
0.01	0.01	0.01	0.01	0.01	0.01	0.00	0.00	0.00	0.00
0.00	0.00	0.00	0.00	0.00	0.00	0.00	0.00	0.00	0.00
0.00	0.00	0.00	0.00	0.00	0.00	0.00	0.00	0.00	0.00
0.00	0.00	0.00	0.00	0.00	0.00	0.00	0.00	0.00	0.00
0.00	0.00	0.00	0.00	0.00	0.00	0.00	0.00	0.00	0.00
0.00	0.00	0.00	0.00	0.00	0.00	0.00	0.00	0.00	0.00
0.00	0.00	0.00	0.00	0.00	0.00	0.00	0.00	0.00	0.00
0.00	0.00	0.00	0.00	0.00	0.00	0.00	0.00	0.00	0.00
0.00	0.00	0.00	0.00	0.00	0.00	0.00	0.00	0.00	0.00
0.00	0.00	0.00	0.00	0.00	0.00	0.00	0.00	0.00	0.00
0.00	0.00	0.00	0.00	0.00	0.00	0.00	0.00	0.00	0.00
0.00	0.00	0.00	0.00	0.00	0.00	0.00	0.00	0.00	0.00
0.00	0.00	0.00	0.00	0.00	0.00	0.00	0.00	0.00	0.00
0.00	0.00	0.00	0.00	0.00	0.00	0.00	0.00		

288 LG GREEN AND AMPT LOSS RATE
STRTL 0.13 STARTING LOSS
DTH 0.15 MOISTURE DEFICIT
PSIF 7.00 WETTING FRONT SUCTION
XKSAT 0.18 HYDRAULIC CONDUCTIVITY
RTIMP 9.00 PERCENT IMPERVIOUS AREA

289 UC CLARK UNITGRAPH
TC 1.50 TIME OF CONCENTRATION
R 1.06 STORAGE COEFFICIENT

290 UA ACCUMULATED-AREA VS. TIME, 11 ORDINATES

0.0	5.0	16.0	30.0	65.0	77.0	84.0	90.0	94.0	97.0
100.0									

***

UNIT HYDROGRAPH PARAMETERS
CLARK TC= 1.50 HR, R= 1.06 HR
SNYDER TP= 0.81 HR, CP= 0.44

UNIT HYDROGRAPH
75 END-OF-PERIOD ORDINATES

2.	6.	12.	20.	28.	42.	62.	77.	82.	83.
82.	81.	79.	76.	73.	70.	67.	64.	61.	56.
52.	48.	44.	41.	38.	35.	32.	30.	28.	25.
24.	22.	20.	19.	17.	16.	15.	14.	13.	12.
11.	10.	9.	8.	8.	7.	7.	6.	6.	5.
5.	4.	4.	4.	4.	3.	3.	3.	3.	2.
2.	2.	2.	2.	2.	1.	1.	1.	1.	1.
1.	1.	1.	1.	1.					

*** *** *** *** ***

HYDROGRAPH AT STATION VR59C

TOTAL RAINFALL = 3.92, TOTAL LOSS = 2.26, TOTAL EXCESS = 1.67

PEAK FLOW	TIME		MAXIMUM AVERAGE FLOW			
			6-HR	24-HR	72-HR	24.92-HR
+ (CFS)	(HR)					
		(CFS)				
+ 117.	12.75		39.	10.	10.	10.
		(INCHES)	1.545	1.656	1.656	1.656
		(AC-FT)	19.	21.	21.	21.

CUMULATIVE AREA = 0.23 SQ MI

*** ***

```
              **************
              *            *
292 KK        *   RB1593   *
              *            *
              **************
```

ROUTE FLOW FROM SUB-BASIN VR59C TO COMPUTATION POINT CB159C
ROUTING REVISED TO REFLECT URBANIZED CONDITIONS

HYDROGRAPH ROUTING DATA

295 RS STORAGE ROUTING
NSTPS 3 NUMBER OF SUBREACHES
ITYP ELEV TYPE OF INITIAL CONDITION
RSVRIC -1.00 INITIAL CONDITION
X 0.00 WORKING R AND D COEFFICIENT

296 RC NORMAL DEPTH CHANNEL
ANL 0.035 LEFT OVERBANK N-VALUE
ANCH 0.035 MAIN CHANNEL N-VALUE
ANR 0.035 RIGHT OVERBANK N-VALUE
RLNTH 3000. REACH LENGTH
SEL 0.0015 ENERGY SLOPE
ELMAX 0.0 MAX. ELEV. FOR STORAGE/OUTFLOW CALCULATION

CROSS-SECTION DATA

		--- LEFT OVERBANK --- +		------ MAIN CHANNEL ------- +			--- RIGHT OVERBANK ---	
298 RY ELEVATION	1002.00	1001.30	1001.00	998.00	998.00	1001.00	1001.30	1002.00
297 RX DISTANCE	0.00	20.00	40.00	46.00	56.00	62.00	82.00	102.00

***

COMPUTED STORAGE-OUTFLOW-ELEVATION DATA

STORAGE	0.00	0.15	0.31	0.49	0.68	0.88	1.09	1.31	1.55	1.80
OUTFLOW	0.00	1.24	3.98	7.92	12.97	19.09	26.28	34.53	43.85	54.27
ELEVATION	998.00	998.21	998.42	998.63	998.84	999.05	999.26	999.47	999.68	999.89
STORAGE	2.06	2.33	2.62	2.92	3.23	3.66	4.47	5.52	6.73	8.12
OUTFLOW	65.80	78.45	92.27	107.26	123.45	143.96	170.63	204.76	246.25	295.71
ELEVATION	1000.11	1000.32	1000.53	1000.74	1000.95	1001.16	1001.37	1001.58	1001.79	1002.00

*** *** *** *** ***

HYDROGRAPH AT STATION RB1593

PEAK FLOW	TIME		MAXIMUM AVERAGE FLOW			
			6-HR	24-HR	72-HR	24.92-HR
+ (CFS)	(HR)					
		(CFS)				
+ 114.	13.00		39.	10.	10.	10.
		(INCHES)	1.541	1.650	1.650	1.650
		(AC-FT)	19.	21.	21.	21.
PEAK STORAGE	TIME		MAXIMUM AVERAGE STORAGE			
			6-HR	24-HR	72-HR	24.92-HR
+ (AC-FT)	(HR)					
1.	13.00		0.	0.	0.	0.
PEAK STAGE	TIME		MAXIMUM AVERAGE STAGE			
			6-HR	24-HR	72-HR	24.92-HR
+ (FEET)	(HR)					
1000.83	13.00		999.37	998.45	998.43	998.43

CUMULATIVE AREA = 0.23 SQ MI

*** ***

```
**************
*            *
```

299 KK * CB159N *

COMBINE ROUTED FLOWS FROM COMPUTATION POINT CB51C AND SUB-BASINS AVR51C
AND VR59C WITH RUNOFF FROM SUB-BASIN BR159C
CP (NORTH FLOWS) AT 59TH AVE AND BASELINE RD.

303 HC HYDROGRAPH COMBINATION
ICOMP 4 NUMBER OF HYDROGRAPHS TO COMBINE

***

MANE2 NPLAN,NSTM	1	0
MANE2 NPLAN,NSTM	1	0
MANE2 NPLAN,NSTM	1	0

*** *** *** *** ***

HYDROGRAPH AT STATION CB159N

PEAK FLOW	TIME		MAXIMUM AVERAGE FLOW			
			6-HR	24-HR	72-HR	24.92-HR
+ (CFS)	(HR)					
		(CFS)				
+ 402.	14.17		212.	76.	73.	73.
		(INCHES)	0.339	0.488	0.488	0.488
		(AC-FT)	105.	151.	151.	151.

CUMULATIVE AREA = 5.81 SQ MI

*** ***

304 KK * OA55C *

SUB-BASIN OA55C
24-HOUR SCS TYPE II RAINFALL WAS USED TO FIND TC & R FOR THIS BASIN
THIS BASIN USED RAINFALL REDUCTION FACTOR OF .934
L = .96 Kb = .049 Adj. Slope = 3.0

SUBBASIN RUNOFF DATA

309 BA SUBBASIN CHARACTERISTICS
TAREA 0.25 SUBBASIN AREA

PRECIPITATION DATA

32 PB STORM 3.92 BASIN TOTAL PRECIPITATION

32 PI INCREMENTAL PRECIPITATION PATTERN

0.00	0.00	0.00	0.00	0.00	0.00	0.00	0.00	0.00	0.00
0.00	0.00	0.00	0.00	0.00	0.00	0.00	0.00	0.00	0.00
0.00	0.00	0.00	0.00	0.00	0.00	0.00	0.00	0.00	0.00
0.00	0.00	0.00	0.00	0.00	0.00	0.00	0.00	0.00	0.00
0.00	0.00	0.00	0.00	0.00	0.00	0.00	0.00	0.00	0.00
0.00	0.00	0.00	0.00	0.00	0.00	0.00	0.00	0.00	0.00
0.00	0.00	0.00	0.00	0.00	0.00	0.00	0.00	0.00	0.00
0.00	0.00	0.00	0.00	0.00	0.00	0.00	0.00	0.00	0.00
0.00	0.00	0.00	0.00	0.00	0.00	0.00	0.00	0.00	0.00
0.00	0.00	0.00	0.00	0.00	0.00	0.00	0.00	0.00	0.00
0.00	0.00	0.00	0.00	0.00	0.00	0.00	0.00	0.00	0.00
0.00	0.00	0.00	0.00	0.00	0.00	0.00	0.00	0.00	0.00
0.00	0.00	0.00	0.00	0.00	0.00	0.00	0.01	0.00	0.01
0.01	0.01	0.01	0.01	0.01	0.01	0.01	0.01	0.03	0.03
0.03	0.09	0.09	0.09	0.01	0.01	0.01	0.01	0.01	0.01
0.01	0.01	0.01	0.01	0.01	0.01	0.00	0.00	0.00	0.00
0.00	0.00	0.00	0.00	0.00	0.00	0.00	0.00	0.00	0.00
0.00	0.00	0.00	0.00	0.00	0.00	0.00	0.00	0.00	0.00
0.00	0.00	0.00	0.00	0.00	0.00	0.00	0.00	0.00	0.00
0.00	0.00	0.00	0.00	0.00	0.00	0.00	0.00	0.00	0.00
0.00	0.00	0.00	0.00	0.00	0.00	0.00	0.00	0.00	0.00
0.00	0.00	0.00	0.00	0.00	0.00	0.00	0.00	0.00	0.00
0.00	0.00	0.00	0.00	0.00	0.00	0.00	0.00	0.00	0.00
0.00	0.00	0.00	0.00	0.00	0.00	0.00	0.00	0.00	0.00
0.00	0.00	0.00	0.00	0.00	0.00	0.00	0.00	0.00	0.00
0.00	0.00	0.00	0.00	0.00	0.00	0.00	0.00	0.00	0.00
0.00	0.00	0.00	0.00	0.00	0.00	0.00	0.00	0.00	0.00
0.00	0.00	0.00	0.00	0.00	0.00	0.00	0.00	0.00	0.00
0.00	0.00	0.00	0.00	0.00	0.00	0.00	0.00		

310 LG GREEN AND AMPT LOSS RATE

STRTL	0.29	STARTING LOSS
DTH	0.25	MOISTURE DEFICIT
PSIF	4.80	WETTING FRONT SUCTION
XKSAT	0.36	HYDRAULIC CONDUCTIVITY
RTIMP	19.00	PERCENT IMPERVIOUS AREA

311 UC CLARK UNITGRAPH

TC	1.50	TIME OF CONCENTRATION
R	1.25	STORAGE COEFFICIENT

312 UA ACCUMULATED-AREA VS. TIME, 11 ORDINATES

0.0	5.0	16.0	30.0	65.0	77.0	84.0	90.0	94.0	97.0
100.0									

***

UNIT HYDROGRAPH PARAMETERS
CLARK TC= 1.50 HR, R= 1.25 HR
SNYDER TP= 0.84 HR, CP= 0.40

UNIT HYDROGRAPH
87 END-OF-PERIOD ORDINATES

2.	5.	11.	18.	26.	38.	57.	71.	76.	77.
77.	77.	75.	74.	72.	69.	67.	64.	61.	57.
54.	50.	47.	44.	41.	38.	36.	34.	31.	29.
28.	26.	24.	23.	21.	20.	18.	17.	16.	15.
14.	13.	12.	12.	11.	10.	9.	9.	8.	8.
7.	7.	6.	6.	6.	5.	5.	5.	4.	4.
4.	3.	3.	3.	3.	3.	2.	2.	2.	2.
2.	2.	2.	2.	1.	1.	1.	1.	1.	1.
1.	1.	1.	1.	1.	1.	1.			

*** *** *** *** ***

HYDROGRAPH AT STATION OA55C

TOTAL RAINFALL = 3.92, TOTAL LOSS = 2.29, TOTAL EXCESS = 1.63

PEAK FLOW	TIME		MAXIMUM AVERAGE FLOW			
			6-HR	24-HR	72-HR	24.92-HR
+ (CFS)	(HR)					
		(CFS)				
+ 97.	12.75		37.	11.	10.	10.
		(INCHES)	1.383	1.618	1.619	1.619
		(AC-FT)	18.	21.	21.	21.

CUMULATIVE AREA = 0.25 SQ MI

*** ***

314 KK * OA55R *

DIVERT RETENTION VOLUME

DT DIVERSION
ISTAD RET55C DIVERSION HYDROGRAPH IDENTIFICATION
DSTRMX 2.40 MAXIMUM VOLUME TO BE DIVERTED

DI	INFLOW	0.00	1000.00	10000.00
DQ	DIVERTED FLOW	0.00	1000.00	10000.00

***

*** *** *** *** ***

DIVERSION HYDROGRAPH RET55C

PEAK FLOW	TIME		MAXIMUM AVERAGE FLOW			
			6-HR	24-HR	72-HR	24.92-HR
+ (CFS)	(HR)					
		(CFS)				
+ 27.	12.08		4.	1.	1.	1.
		(INCHES)	0.141	0.183	0.183	0.183
		(AC-FT)	2.	2.	2.	2.

CUMULATIVE AREA = 0.25 SQ MI

*** *** *** *** ***

HYDROGRAPH AT STATION OA55R

PEAK FLOW	TIME		MAXIMUM AVERAGE FLOW			
			6-HR	24-HR	72-HR	24.92-HR
+ (CFS)	(HR)					
		(CFS)				
+ 97.	12.75		36.	9.	9.	9.
		(INCHES)	1.350	1.436	1.436	1.436
		(AC-FT)	18.	19.	19.	19.

CUMULATIVE AREA = 0.25 SQ MI

*** ***

```
              **************
              *            *
319 KK        *   RD57C    *
              *            *
              **************
                             ROUTE FLOW FROM COMPUTATION POINT CP055C TO COMPUTAION CDR57C
                             CROSS-SECTION REVISED TO REFLECT URBANIZED CONDITIONS

               HYDROGRAPH ROUTING DATA

322 RS           STORAGE ROUTING
                      NSTPS          2  NUMBER OF SUBREACHES
                      ITYP        ELEV  TYPE OF INITIAL CONDITION
                      RSVRIC     -1.00  INITIAL CONDITION
                      X           0.00 WORKING R AND D COEFFICIENT

323 RC           NORMAL DEPTH CHANNEL
                      ANL        0.035  LEFT OVERBANK N-VALUE
                      ANCH       0.035  MAIN CHANNEL N-VALUE
                      ANR        0.035  RIGHT OVERBANK N-VALUE
                      RLNTH      2920.  REACH LENGTH
                      SEL       0.0010  ENERGY SLOPE
                      ELMAX        0.0  MAX. ELEV. FOR STORAGE/OUTFLOW CALCULATION

                                         CROSS-SECTION DATA
                        --- LEFT OVERBANK --- + ------ MAIN CHANNEL ------- + --- RIGHT OVERBANK ---
325 RY          ELEVATION  1030.00   1029.00   1028.00   1022.00   1022.00   1028.00   1029.00   1030.00
324 RX          DISTANCE      0.00     40.00     60.00     72.00     97.00    109.00    129.00    149.00

                                                                 ***

                                         COMPUTED STORAGE-OUTFLOW-ELEVATION DATA

           STORAGE      0.00      0.73      1.51      2.33      3.20      4.12      5.09      6.10      7.17      8.28
           OUTFLOW      0.00      8.02     25.66     50.92     83.12    121.92    167.17    218.82    276.86    341.33
         ELEVATION   1022.00   1022.42   1022.84   1023.26   1023.68   1024.11   1024.53   1024.95   1025.37   1025.79

           STORAGE      9.43     10.64     11.89     13.19     14.54     16.05     18.03     20.50     23.63     27.48
           OUTFLOW    412.27    489.78    573.94    664.85    762.62    882.59   1020.65   1176.06   1354.56   1562.96
         ELEVATION   1026.21   1026.63   1027.05   1027.47   1027.89   1028.32   1028.74   1029.16   1029.58   1030.00


     ***         ***          ***          ***          ***

                       HYDROGRAPH AT STATION    RD57C

 PEAK FLOW      TIME                          MAXIMUM AVERAGE FLOW
                                      6-HR        24-HR       72-HR     24.92-HR
+  (CFS)        (HR)
                          (CFS)
+     90.      13.17                   35.          9.          9.          9.
                        (INCHES)     1.317       1.427       1.427       1.427
                         (AC-FT)       17.         19.         19.         19.

PEAK STORAGE    TIME                        MAXIMUM AVERAGE STORAGE
                                      6-HR        24-HR       72-HR     24.92-HR
+  (AC-FT)      (HR)
        2.     13.17                    1.          0.          0.          0.

 PEAK STAGE     TIME                          MAXIMUM AVERAGE STAGE
                                      6-HR        24-HR       72-HR     24.92-HR
+   (FEET)      (HR)
   1023.76     13.17               1022.92     1022.27     1022.26     1022.26

                      CUMULATIVE AREA =     0.25 SQ MI


*** *** *** *** *** *** *** *** *** *** *** *** *** *** *** *** *** *** *** *** *** *** *** *** *** *** *** *** *** *** *** *** *** ***


              **************
              *            *
326 KK        *   DR57C    *
              *            *
              **************
                             SUB-BASIN DR57C
                             24-HOUR SCS TYPE II RAINFALL WAS USED TO FIND TC & R FOR THIS BASIN
                             THIS BASIN USED RAINFALL REDUCTION FACTOR OF  .934
                               L =  .71  Kb = .054  Adj. Slope =    3.0

               SUBBASIN RUNOFF DATA

331 BA           SUBBASIN CHARACTERISTICS
                      TAREA       0.12  SUBBASIN AREA

                 PRECIPITATION DATA

32 PB                 STORM       3.92  BASIN TOTAL PRECIPITATION

32 PI              INCREMENTAL PRECIPITATION PATTERN
                        0.00      0.00      0.00      0.00      0.00      0.00      0.00      0.00      0.00      0.00
                        0.00      0.00      0.00      0.00      0.00      0.00      0.00      0.00      0.00      0.00
                        0.00      0.00      0.00      0.00      0.00      0.00      0.00      0.00      0.00      0.00
                        0.00      0.00      0.00      0.00      0.00      0.00      0.00      0.00      0.00      0.00
                        0.00      0.00      0.00      0.00      0.00      0.00      0.00      0.00      0.00      0.00
                        0.00      0.00      0.00      0.00      0.00      0.00      0.00      0.00      0.00      0.00
                        0.00      0.00      0.00      0.00      0.00      0.00      0.00      0.00      0.00      0.00
                        0.00      0.00      0.00      0.00      0.00      0.00      0.00      0.00      0.00      0.00
                        0.00      0.00      0.00      0.00      0.00      0.00      0.00      0.00      0.00      0.00
                        0.00      0.00      0.00      0.00      0.00      0.00      0.00      0.00      0.00      0.00
                        0.00      0.00      0.00      0.00      0.00      0.00      0.00      0.00      0.00      0.00
                        0.00      0.00      0.00      0.00      0.00      0.00      0.00      0.00      0.00      0.00
                        0.00      0.00      0.00      0.00      0.00      0.00      0.00      0.01      0.00      0.01
                        0.01      0.01      0.01      0.01      0.01      0.01      0.01      0.01      0.03      0.03
                        0.03      0.09      0.09      0.09      0.01      0.01      0.01      0.01      0.01      0.01
                        0.01      0.01      0.01      0.01      0.01      0.01      0.00      0.00      0.00      0.00
                        0.00      0.00      0.00      0.00      0.00      0.00      0.00      0.00      0.00      0.00
                        0.00      0.00      0.00      0.00      0.00      0.00      0.00      0.00      0.00      0.00
                        0.00      0.00      0.00      0.00      0.00      0.00      0.00      0.00      0.00      0.00
                        0.00      0.00      0.00      0.00      0.00      0.00      0.00      0.00      0.00      0.00
                        0.00      0.00      0.00      0.00      0.00      0.00      0.00      0.00      0.00      0.00
                        0.00      0.00      0.00      0.00      0.00      0.00      0.00      0.00      0.00      0.00
                        0.00      0.00      0.00      0.00      0.00      0.00      0.00      0.00      0.00      0.00
                        0.00      0.00      0.00      0.00      0.00      0.00      0.00      0.00      0.00      0.00
                        0.00      0.00      0.00      0.00      0.00      0.00      0.00      0.00      0.00      0.00
                        0.00      0.00      0.00      0.00      0.00      0.00      0.00      0.00      0.00      0.00
                        0.00      0.00      0.00      0.00      0.00      0.00      0.00      0.00      0.00      0.00
                        0.00      0.00      0.00      0.00      0.00      0.00      0.00      0.00      0.00      0.00
                        0.00      0.00      0.00      0.00      0.00      0.00      0.00      0.00

332 LG           GREEN AND AMPT LOSS RATE
                      STRTL       0.30  STARTING LOSS
                      DTH         0.25  MOISTURE DEFICIT
                      PSIF        4.80  WETTING FRONT SUCTION
                      XKSAT       0.36  HYDRAULIC CONDUCTIVITY
                      RTIMP      15.00  PERCENT IMPERVIOUS AREA

333 UC           CLARK UNITGRAPH
                      TC          1.50  TIME OF CONCENTRATION
                      R           1.49  STORAGE COEFFICIENT

334 UA           ACCUMULATED-AREA VS. TIME,  11 ORDINATES
                        0.0       5.0      16.0      30.0      65.0      77.0      84.0      90.0      94.0      97.0
                      100.0

                                                         ***

                                                  UNIT HYDROGRAPH PARAMETERS
                                           CLARK   TC=  1.50 HR,        R=  1.49 HR
                                          SNYDER   TP=  0.94 HR,       CP=  0.39

                                                       UNIT HYDROGRAPH
                                                 103 END-OF-PERIOD ORDINATES
                1.         2.         4.         7.        11.        16.        23.        29.        32.        32.
               33.        33.        32.        32.        31.        30.        29.        29.        28.        26.
               25.        23.        22.        21.        20.        19.        18.        17.        16.        15.
               14.        13.        13.        12.        11.        11.        10.        10.         9.         9.
                8.         8.         7.         7.         6.         6.         6.         5.         5.         5.
                5.         4.         4.         4.         4.         3.         3.         3.         3.         3.
                3.         2.         2.         2.         2.         2.         2.         2.         2.         2.
                2.         1.         1.         1.         1.         1.         1.         1.         1.         1.
                1.         1.         1.         1.         1.         1.         1.         1.         1.         1.
                0.         0.         0.         0.         0.         0.         0.         0.         0.         0.
                0.         0.         0.

     ***         ***          ***          ***          ***

                       HYDROGRAPH AT STATION    DR57C

    TOTAL RAINFALL =     3.92, TOTAL LOSS =     2.40, TOTAL EXCESS =     1.52

 PEAK FLOW      TIME                          MAXIMUM AVERAGE FLOW
                                      6-HR        24-HR       72-HR     24.92-HR
+  (CFS)        (HR)
                          (CFS)
+     40.      12.75                   16.          5.          5.          5.
                        (INCHES)     1.300       1.504       1.505       1.505
                         (AC-FT)        8.          9.          9.          9.

                      CUMULATIVE AREA =     0.12 SQ MI


*** *** *** *** *** *** *** *** *** *** *** *** *** *** *** *** *** *** *** *** *** *** *** *** *** *** *** *** *** *** *** *** *** ***


              **************
              *            *
336 KK        *   DR57R    *
              *            *
              **************
                             DIVERT RETENTION VOLUME

 DT              DIVERSION
                      ISTAD      RET27  DIVERSION HYDROGRAPH IDENTIFICATION
```

```
                    DSTRMX       12.80  MAXIMUM VOLUME TO BE DIVERTED

      DI             INFLOW       0.00   1000.00  10000.00

      DQ       DIVERTED FLOW      0.00   1000.00  10000.00

                                                          ***

       ***             ***             ***             ***             ***

                        DIVERSION HYDROGRAPH    RET27

   PEAK FLOW     TIME                          MAXIMUM AVERAGE FLOW
                                      6-HR        24-HR       72-HR      24.92-HR
+    (CFS)       (HR)
                    (CFS)
+       40.     12.75                  16.          5.          5.          5.
                (INCHES)           1.300       1.504       1.505       1.505
                (AC-FT)              8.          9.          9.          9.

                CUMULATIVE AREA =    0.12 SQ MI

       ***             ***             ***             ***             ***

                        HYDROGRAPH AT STATION    DR57R

   PEAK FLOW     TIME                          MAXIMUM AVERAGE FLOW
                                      6-HR        24-HR       72-HR      24.92-HR
+    (CFS)       (HR)
                    (CFS)
+        0.      0.00                   0.          0.          0.          0.
                (INCHES)           0.000       0.000       0.000       0.000
                (AC-FT)              0.          0.          0.          0.

                CUMULATIVE AREA =    0.12 SQ MI


*** *** *** *** *** *** *** *** *** *** *** *** *** *** *** *** *** *** *** *** *** *** *** *** *** *** *** *** *** *** *** *** *** *** ***

            **************
            *            *
341 KK      *    CDR57C  *
            *            *
            **************
                        COMBINE ROUTED FLOW FROM COMPUTATION POINT CPO55C TO RUNOFF FROM SUB-BASIN
                        DR57C

 344 HC             HYDROGRAPH COMBINATION
                         ICOMP           2  NUMBER OF HYDROGRAPHS TO COMBINE

                                                          ***

MANE2 NPLAN,NSTM        1       0

       ***             ***             ***             ***             ***

                        HYDROGRAPH AT STATION    CDR57C

   PEAK FLOW     TIME                          MAXIMUM AVERAGE FLOW
                                      6-HR        24-HR       72-HR      24.92-HR
+    (CFS)       (HR)
                    (CFS)
+       90.     13.17                  35.          9.          9.          9.
                (INCHES)           0.890       0.964       0.964       0.964
                (AC-FT)             17.          19.         19.         19.

                CUMULATIVE AREA =    0.36 SQ MI


*** *** *** *** *** *** *** *** *** *** *** *** *** *** *** *** *** *** *** *** *** *** *** *** *** *** *** *** *** *** *** *** *** *** ***

            **************
            *            *
345 KK      *    RD59C   *
            *            *
            **************
                        ROUTE FLOW FROM COMPUTATION POINT CDR57C TO COMPUTATION POINT CDR59C
                        CROSS-SECTION REVISED TO REFLECT URBANIZED CONDITIONS

                    HYDROGRAPH ROUTING DATA

 348 RS             STORAGE ROUTING
                         NSTPS           1  NUMBER OF SUBREACHES
                          ITYP        ELEV  TYPE OF INITIAL CONDITION
                        RSVRIC       -1.00  INITIAL CONDITION
                             X        0.00 WORKING R AND D COEFFICIENT

 349 RC             NORMAL DEPTH CHANNEL
                          ANL       0.035  LEFT OVERBANK N-VALUE
                          ANCH      0.035  MAIN CHANNEL N-VALUE
                          ANR       0.035  RIGHT OVERBANK N-VALUE
                        RLNTH        1200. REACH LENGTH
                          SEL      0.0025  ENERGY SLOPE
                        ELMAX         0.0  MAX. ELEV. FOR STORAGE/OUTFLOW CALCULATION

                                CROSS-SECTION DATA
                          --- LEFT OVERBANK --- + ------ MAIN CHANNEL ------- + --- RIGHT OVERBANK ---
 351 RY       ELEVATION  1026.00  1025.00  1024.00  1019.00  1019.00  1024.00  1025.00  1026.00
 350 RX       DISTANCE      0.00    40.00    60.00    72.00    97.00   109.00   129.00   149.00

                                                          ***

                        COMPUTED STORAGE-OUTFLOW-ELEVATION DATA

      STORAGE      0.00     0.26     0.54     0.84     1.16     1.49     1.85     2.22     2.60     3.01
      OUTFLOW      0.00    10.16    32.59    64.79   105.94   155.65   213.76   280.23   355.06   438.34
    ELEVATION   1019.00  1019.37  1019.74  1020.11  1020.47  1020.84  1021.21  1021.58  1021.95  1022.32

      STORAGE      3.43     3.88     4.34     4.81     5.32     5.96     6.74     7.70     8.87    10.27
      OUTFLOW    530.14   630.60   739.84   858.01   995.48  1160.30  1344.97  1552.42  1791.08  2067.16
    ELEVATION   1022.68  1023.05  1023.42  1023.79  1024.16  1024.53  1024.89  1025.26  1025.63  1026.00

       ***             ***             ***             ***             ***

                        HYDROGRAPH AT STATION    RD59C

   PEAK FLOW     TIME                          MAXIMUM AVERAGE FLOW
                                      6-HR        24-HR       72-HR      24.92-HR
+    (CFS)       (HR)
                    (CFS)
+       89.     13.33                  35.          9.          9.          9.
                (INCHES)           0.884       0.962       0.962       0.962
                (AC-FT)             17.          19.         19.         19.

  PEAK STORAGE   TIME                       MAXIMUM AVERAGE STORAGE
                                      6-HR        24-HR       72-HR      24.92-HR
+  (AC-FT)       (HR)
          1.    13.33                   1.          0.          0.          0.

   PEAK STAGE    TIME                       MAXIMUM AVERAGE STAGE
                                      6-HR        24-HR       72-HR      24.92-HR
+    (FEET)      (HR)
    1020.32     13.33                1019.69     1019.20     1019.19     1019.19

                CUMULATIVE AREA =    0.36 SQ MI

*** *** *** *** *** *** *** *** *** *** *** *** *** *** *** *** *** *** *** *** *** *** *** *** *** *** *** *** *** *** *** *** *** *** ***

            **************
            *            *
352 KK      *    DR59C   *
            *            *
            **************
                        SUB-BASIN DR59C
                        24-HOUR SCS TYPE II RAINFALL WAS USED TO FIND TC & R FOR THIS BASIN
                        THIS BASIN USED RAINFALL REDUCTION FACTOR OF  .934
                          L =  .69  Kb = .048  Adj. Slope =    7.0

                    SUBBASIN RUNOFF DATA

 357 BA             SUBBASIN CHARACTERISTICS
                         TAREA        0.12  SUBBASIN AREA

                    PRECIPITATION DATA

  32 PB                  STORM        3.92  BASIN TOTAL PRECIPITATION

  32 PI               INCREMENTAL PRECIPITATION PATTERN
                      0.00  0.00  0.00  0.00  0.00  0.00  0.00  0.00  0.00  0.00
                      0.00  0.00  0.00  0.00  0.00  0.00  0.00  0.00  0.00  0.00
                      0.00  0.00  0.00  0.00  0.00  0.00  0.00  0.00  0.00  0.00
                      0.00  0.00  0.00  0.00  0.00  0.00  0.00  0.00  0.00  0.00
                      0.00  0.00  0.00  0.00  0.00  0.00  0.00  0.00  0.00  0.00
                      0.00  0.00  0.00  0.00  0.00  0.00  0.00  0.00  0.00  0.00
                      0.00  0.00  0.00  0.00  0.00  0.00  0.00  0.00  0.00  0.00
                      0.00  0.00  0.00  0.00  0.00  0.00  0.00  0.00  0.00  0.00
                      0.00  0.00  0.00  0.00  0.00  0.00  0.00  0.00  0.00  0.00
                      0.00  0.00  0.00  0.00  0.00  0.00  0.00  0.00  0.00  0.00
                      0.00  0.00  0.00  0.00  0.00  0.00  0.00  0.00  0.00  0.00
                      0.00  0.00  0.00  0.00  0.00  0.00  0.00  0.00  0.00  0.00
                      0.00  0.00  0.00  0.00  0.00  0.00  0.00  0.01  0.00  0.01
                      0.01  0.01  0.01  0.01  0.01  0.01  0.01  0.01  0.03  0.03
                      0.03  0.09  0.09  0.09  0.01  0.01  0.01  0.01  0.01  0.01
                      0.01  0.01  0.01  0.01  0.01  0.01  0.01  0.00  0.00  0.00
                      0.00  0.00  0.00  0.00  0.00  0.00  0.00  0.00  0.00  0.00
                      0.00  0.00  0.00  0.00  0.00  0.00  0.00  0.00  0.00  0.00
                      0.00  0.00  0.00  0.00  0.00  0.00  0.00  0.00  0.00  0.00
                      0.00  0.00  0.00  0.00  0.00  0.00  0.00  0.00  0.00  0.00
```

```
            0.00      0.00      0.00      0.00      0.00      0.00      0.00      0.00      0.00      0.00
            0.00      0.00      0.00      0.00      0.00      0.00      0.00      0.00      0.00      0.00
            0.00      0.00      0.00      0.00      0.00      0.00      0.00      0.00      0.00      0.00
            0.00      0.00      0.00      0.00      0.00      0.00      0.00      0.00      0.00      0.00
            0.00      0.00      0.00      0.00      0.00      0.00      0.00      0.00      0.00      0.00
            0.00      0.00      0.00      0.00      0.00      0.00      0.00      0.00      0.00      0.00
            0.00      0.00      0.00      0.00      0.00      0.00      0.00      0.00      0.00      0.00
            0.00      0.00      0.00      0.00      0.00      0.00      0.00      0.00

358 LG         GREEN AND AMPT LOSS RATE
                     STRTL         0.23  STARTING LOSS
                       DTH         0.25  MOISTURE DEFICIT
                      PSIF         4.80  WETTING FRONT SUCTION
                     XKSAT         0.37  HYDRAULIC CONDUCTIVITY
                     RTIMP        37.00  PERCENT IMPERVIOUS AREA

359 UC         CLARK UNITGRAPH
                        TC         1.55  TIME OF CONCENTRATION
                         R         1.52  STORAGE COEFFICIENT

360 UA         ACCUMULATED-AREA VS. TIME, 11 ORDINATES
                  0.0       5.0      16.0      30.0      65.0      77.0      84.0      90.0      94.0      97.0
                100.0

                                                        ***

                                         UNIT HYDROGRAPH PARAMETERS
                                      CLARK   TC=  1.55 HR,          R=  1.52 HR
                                     SNYDER   TP=  0.95 HR,         CP=  0.39

                                               UNIT HYDROGRAPH
                                          105 END-OF-PERIOD ORDINATES
              1.        2.        4.        7.       10.       14.       21.       27.       30.       31.
             31.       32.       31.       31.       30.       30.       29.       28.       27.       26.
             25.       23.       22.       21.       20.       19.       18.       17.       16.       15.
             14.       14.       13.       12.       11.       11.       10.       10.        9.        9.
              8.        8.        7.        7.        7.        6.        6.        6.        5.        5.
              5.        5.        4.        4.        4.        4.        3.        3.        3.        3.
              3.        3.        2.        2.        2.        2.        2.        2.        2.        2.
              2.        2.        1.        1.        1.        1.        1.        1.        1.        1.
              1.        1.        1.        1.        1.        1.        1.        1.        1.        1.
              1.        1.        0.        0.        0.        0.        0.        0.        0.        0.
              0.        0.        0.        0.        0.

      ***            ***            ***            ***            ***

                          HYDROGRAPH AT STATION     DR59C

   TOTAL RAINFALL =     3.92, TOTAL LOSS =     1.78, TOTAL EXCESS =     2.14

  PEAK FLOW      TIME                               MAXIMUM AVERAGE FLOW
                                       6-HR          24-HR          72-HR       24.92-HR
+   (CFS)        (HR)
                              (CFS)
+      45.      12.83                    21.            7.             6.             6.
                           (INCHES)    1.644         2.112          2.113          2.113
                            (AC-FT)      10.           13.            13.            13.

                        CUMULATIVE AREA =      0.12 SQ MI

*** *** *** *** *** *** *** *** *** *** *** *** *** *** *** *** *** *** *** *** *** *** *** *** *** *** *** *** *** *** *** *** *** ***

              **************
              *            *
362 KK        *    DR59R   *
              *            *
              **************
                         DIVERT RETENTION VOLUME

    DT            DIVERSION
                      ISTAD        RET59C  DIVERSION HYDROGRAPH IDENTIFICATION
                     DSTRMX         10.40  MAXIMUM VOLUME TO BE DIVERTED

    DI                INFLOW         0.00   1000.00  10000.00

    DQ         DIVERTED FLOW         0.00   1000.00  10000.00

                                                        ***

      ***            ***            ***            ***            ***

                          DIVERSION HYDROGRAPH    RET59C

  PEAK FLOW      TIME                               MAXIMUM AVERAGE FLOW
                                       6-HR          24-HR          72-HR       24.92-HR
+   (CFS)        (HR)
                              (CFS)
+      45.      12.83                    19.            5.             5.             5.
                           (INCHES)    1.501         1.667          1.667          1.667
                            (AC-FT)       9.           10.            10.            10.
```

```
                        CUMULATIVE AREA =      0.12 SQ MI

      ***            ***            ***            ***            ***

                          HYDROGRAPH AT STATION     DR59R

  PEAK FLOW      TIME                               MAXIMUM AVERAGE FLOW
                                       6-HR          24-HR          72-HR       24.92-HR
+   (CFS)        (HR)
                              (CFS)
+      13.      15.67                     5.            1.             1.             1.
                           (INCHES)    0.383         0.446          0.446          0.446
                            (AC-FT)       2.            3.             3.             3.

                        CUMULATIVE AREA =      0.12 SQ MI

*** *** *** *** *** *** *** *** *** *** *** *** *** *** *** *** *** *** *** *** *** *** *** *** *** *** *** *** *** *** *** *** *** ***

              **************
              *            *
367 KK        *   CDR59C   *
              *            *
              **************
                         COMBINE ROUTED FLOW FROM COMPUTATION POINT CDR57C TO RUNOFF FROM SUB-BASIN
                         DR59C

370 HC            HYDROGRAPH COMBINATION
                      ICOMP             2  NUMBER OF HYDROGRAPHS TO COMBINE

                                                        ***

MANE2 NPLAN,NSTM        1      0

      ***            ***            ***            ***            ***

                          HYDROGRAPH AT STATION     CDR59C

  PEAK FLOW      TIME                               MAXIMUM AVERAGE FLOW
                                       6-HR          24-HR          72-HR       24.92-HR
+   (CFS)        (HR)
                              (CFS)
+      89.      13.33                    38.           11.            10.            10.
                           (INCHES)    0.739         0.837          0.837          0.837
                            (AC-FT)      19.           21.            21.            21.

                        CUMULATIVE AREA =      0.48 SQ MI

*** *** *** *** *** *** *** *** *** *** *** *** *** *** *** *** *** *** *** *** *** *** *** *** *** *** *** *** *** *** *** *** *** ***

              **************
              *            *
371 KK        *    RB259   *
              *            *
              **************
                         ROUTE FLOW FROM COMPUTATION POINT CDR59C TO COMPUTATION POINT CB259C
                         CROSS-SECTION REVISED TO REFLECT URBANIZED CONDITIONS
                         REVISED SLOPW FROM .0046 TO REFLECT A VELOCITY OF LESS THAN 4 FT/SEC

              HYDROGRAPH ROUTING DATA

376 RS            STORAGE ROUTING
                     NSTPS             2  NUMBER OF SUBREACHES
                      ITYP          ELEV  TYPE OF INITIAL CONDITION
                    RSVRIC         -1.00  INITIAL CONDITION
                         X          0.00  WORKING R AND D COEFFICIENT

377 RC            NORMAL DEPTH CHANNEL
                       ANL         0.035  LEFT OVERBANK N-VALUE
                      ANCH         0.020  MAIN CHANNEL N-VALUE
                       ANR         0.035  RIGHT OVERBANK N-VALUE
                     RLNTH         5280.  REACH LENGTH
                       SEL        0.0015  ENERGY SLOPE
                     ELMAX           0.0  MAX. ELEV. FOR STORAGE/OUTFLOW CALCULATION

                                              CROSS-SECTION DATA
                         --- LEFT OVERBANK --- + ------ MAIN CHANNEL ------- + --- RIGHT OVERBANK ---
379 RY        ELEVATION   1024.00   1023.00   1022.00   1016.00   1016.00   1022.00   1023.00   1024.00
378 RX         DISTANCE      0.00     40.00     60.00     76.00     80.00     96.00    129.00    149.00

                                                        ***

                                  COMPUTED STORAGE-OUTFLOW-ELEVATION DATA

     STORAGE       0.00      0.26      0.64      1.13      1.73      2.45      3.29      4.24      5.30      6.48
     OUTFLOW       0.00      3.01     10.77     23.75     42.69     68.34    101.43    142.64    192.64    252.09
   ELEVATION    1016.00   1016.42   1016.84   1017.26   1017.68   1018.11   1018.53   1018.95   1019.37   1019.79
```

STORAGE	7.77	9.18	10.70	12.34	14.09	16.25	19.51	23.92	29.59	36.55
OUTFLOW	321.59	401.77	493.22	596.50	712.18	865.41	1048.82	1261.96	1512.10	1805.50
ELEVATION	1020.21	1020.63	1021.05	1021.47	1021.90	1022.32	1022.74	1023.16	1023.58	1024.00

*** *** *** *** ***

HYDROGRAPH AT STATION RB259

PEAK FLOW	TIME		MAXIMUM AVERAGE FLOW			
			6-HR	24-HR	72-HR	24.92-HR
+ (CFS)	(HR)					
		(CFS)				
+ 83.	13.75		38.	11.	10.	10.
		(INCHES)	0.725	0.827	0.827	0.827
		(AC-FT)	19.	21.	21.	21.

PEAK STORAGE	TIME	MAXIMUM AVERAGE STORAGE			
		6-HR	24-HR	72-HR	24.92-HR
+ (AC-FT)	(HR)				
1.	13.75	1.	0.	0.	0.

PEAK STAGE	TIME	MAXIMUM AVERAGE STAGE			
		6-HR	24-HR	72-HR	24.92-HR
+ (FEET)	(HR)				
1018.29	13.75	1017.49	1016.51	1016.49	1016.49

CUMULATIVE AREA = 0.48 SQ MI

*** ***

```
              **************
              *            *
380 KK        *  BR259C    *
              *            *
              **************
```

SUB-BASIN BR259C
24-HOUR SCS TYPE II RAINFALL WAS USED TO FIND TC & R FOR THIS BASIN
THIS BASIN USED RAINFALL REDUCTION FACTOR OF .934
L = 1.90 Kb = .037 Adj. Slope = 19.0

SUBBASIN RUNOFF DATA

385 BA SUBBASIN CHARACTERISTICS
TAREA 1.01 SUBBASIN AREA

PRECIPITATION DATA

32 PB STORM 3.92 BASIN TOTAL PRECIPITATION

32 PI INCREMENTAL PRECIPITATION PATTERN

0.00	0.00	0.00	0.00	0.00	0.00	0.00	0.00	0.00	0.00
0.00	0.00	0.00	0.00	0.00	0.00	0.00	0.00	0.00	0.00
0.00	0.00	0.00	0.00	0.00	0.00	0.00	0.00	0.00	0.00
0.00	0.00	0.00	0.00	0.00	0.00	0.00	0.00	0.00	0.00
0.00	0.00	0.00	0.00	0.00	0.00	0.00	0.00	0.00	0.00
0.00	0.00	0.00	0.00	0.00	0.00	0.00	0.00	0.00	0.00
0.00	0.00	0.00	0.00	0.00	0.00	0.00	0.00	0.00	0.00
0.00	0.00	0.00	0.00	0.00	0.00	0.00	0.00	0.00	0.00
0.00	0.00	0.00	0.00	0.00	0.00	0.00	0.00	0.00	0.00
0.00	0.00	0.00	0.00	0.00	0.00	0.00	0.00	0.00	0.00
0.00	0.00	0.00	0.00	0.00	0.00	0.00	0.00	0.00	0.00
0.00	0.00	0.00	0.00	0.00	0.00	0.00	0.00	0.00	0.00
0.00	0.00	0.00	0.00	0.00	0.00	0.00	0.01	0.00	0.01
0.01	0.01	0.01	0.01	0.01	0.01	0.01	0.01	0.03	0.03
0.03	0.09	0.09	0.09	0.01	0.01	0.01	0.01	0.01	0.01
0.01	0.01	0.01	0.01	0.01	0.01	0.00	0.00	0.00	0.00
0.00	0.00	0.00	0.00	0.00	0.00	0.00	0.00	0.00	0.00
0.00	0.00	0.00	0.00	0.00	0.00	0.00	0.00	0.00	0.00
0.00	0.00	0.00	0.00	0.00	0.00	0.00	0.00	0.00	0.00
0.00	0.00	0.00	0.00	0.00	0.00	0.00	0.00	0.00	0.00
0.00	0.00	0.00	0.00	0.00	0.00	0.00	0.00	0.00	0.00
0.00	0.00	0.00	0.00	0.00	0.00	0.00	0.00	0.00	0.00
0.00	0.00	0.00	0.00	0.00	0.00	0.00	0.00	0.00	0.00
0.00	0.00	0.00	0.00	0.00	0.00	0.00	0.00	0.00	0.00
0.00	0.00	0.00	0.00	0.00	0.00	0.00	0.00	0.00	0.00
0.00	0.00	0.00	0.00	0.00	0.00	0.00	0.00	0.00	0.00
0.00	0.00	0.00	0.00	0.00	0.00	0.00	0.00	0.00	0.00
0.00	0.00	0.00	0.00	0.00	0.00	0.00	0.00	0.00	0.00
0.00	0.00	0.00	0.00	0.00	0.00	0.00	0.00		

386 LG GREEN AND AMPT LOSS RATE

STRTL	0.23	STARTING LOSS
DTH	0.25	MOISTURE DEFICIT
PSIF	4.80	WETTING FRONT SUCTION
XKSAT	0.36	HYDRAULIC CONDUCTIVITY
RTIMP	33.00	PERCENT IMPERVIOUS AREA

387 UC CLARK UNITGRAPH

TC	0.95	TIME OF CONCENTRATION
R	0.58	STORAGE COEFFICIENT

388 UA ACCUMULATED-AREA VS. TIME, 11 ORDINATES

0.0	5.0	16.0	30.0	65.0	77.0	84.0	90.0	94.0	97.0
100.0									

***

UNIT HYDROGRAPH PARAMETERS
CLARK TC= 0.95 HR, R= 0.58 HR
SNYDER TP= 0.50 HR, CP= 0.47

UNIT HYDROGRAPH
42 END-OF-PERIOD ORDINATES

23.	89.	183.	337.	526.	620.	617.	593.	560.	518.
477.	433.	382.	331.	287.	248.	215.	187.	162.	140.
121.	105.	91.	79.	68.	59.	51.	45.	39.	33.
29.	25.	22.	19.	16.	14.	12.	11.	9.	8.
7.	6.								

*** *** *** *** ***

HYDROGRAPH AT STATION BR259C

TOTAL RAINFALL = 3.92, TOTAL LOSS = 1.88, TOTAL EXCESS = 2.04

PEAK FLOW	TIME		MAXIMUM AVERAGE FLOW			
			6-HR	24-HR	72-HR	24.92-HR
+ (CFS)	(HR)					
		(CFS)				
+ 778.	12.42		180.	55.	53.	53.
		(INCHES)	1.651	2.023	2.026	2.026
		(AC-FT)	89.	109.	109.	109.

CUMULATIVE AREA = 1.01 SQ MI

*** ***

```
              **************
              *            *
390 KK        *  BR259R    *
              *            *
              **************
```

DIVERT RETENTION VOLUME
RELAXED RETENTION VOLUME FROM 68.3 AC-FT.

DT DIVERSION

ISTAD	RET259	DIVERSION HYDROGRAPH IDENTIFICATION
DSTRMX	67.00	MAXIMUM VOLUME TO BE DIVERTED

DI	INFLOW	0.00	1000.00	10000.00
DQ	DIVERTED FLOW	0.00	1000.00	10000.00

***

*** *** *** *** ***

DIVERSION HYDROGRAPH RET259

PEAK FLOW	TIME		MAXIMUM AVERAGE FLOW			
			6-HR	24-HR	72-HR	24.92-HR
+ (CFS)	(HR)					
		(CFS)				
+ 778.	12.42		124.	34.	33.	33.
		(INCHES)	1.136	1.241	1.241	1.241
		(AC-FT)	61.	67.	67.	67.

CUMULATIVE AREA = 1.01 SQ MI

*** *** *** *** ***

HYDROGRAPH AT STATION BR259R

PEAK FLOW	TIME		MAXIMUM AVERAGE FLOW			
			6-HR	24-HR	72-HR	24.92-HR
+ (CFS)	(HR)					
		(CFS)				
+ 456.	13.00		74.	21.	21.	21.
		(INCHES)	0.684	0.784	0.784	0.784
		(AC-FT)	37.	42.	42.	42.

CUMULATIVE AREA = 1.01 SQ MI

*** ***

****
*   *
396 KK   *   CB259S   *
*   *
****

COMBINE FLOWS FROM THE SOUTH AT 59TH AVENUE

398 HC   HYDROGRAPH COMBINATION
ICOMP   2 NUMBER OF HYDROGRAPHS TO COMBINE

***

MANE2 NPLAN,NSTM   1   0

***   ***   ***   ***   ***

HYDROGRAPH AT STATION   CB259S

PEAK FLOW	TIME		MAXIMUM AVERAGE FLOW			
			6-HR	24-HR	72-HR	24.92-HR
+ (CFS)	(HR)					
		(CFS)				
+ 472.	13.00		112.	32.	31.	31.
		(INCHES)	0.697	0.798	0.798	0.798
		(AC-FT)	55.	64.	64.	64.

CUMULATIVE AREA =   1.49 SQ MI

*** ***

****
*   *
399 KK   *   CB259   *
*   *
****

COMBINE NORTH AND SOUTH FLOWS

401 HC   HYDROGRAPH COMBINATION
ICOMP   2 NUMBER OF HYDROGRAPHS TO COMBINE

***

MANE2 NPLAN,NSTM   1   0

***   ***   ***   ***   ***

HYDROGRAPH AT STATION   CB259

PEAK FLOW	TIME		MAXIMUM AVERAGE FLOW			
			6-HR	24-HR	72-HR	24.92-HR
+ (CFS)	(HR)					
		(CFS)				
+ 590.	13.00		323.	108.	104.	104.
		(INCHES)	0.412	0.552	0.552	0.552
		(AC-FT)	160.	215.	215.	215.

CUMULATIVE AREA =   7.30 SQ MI

*** ***

****
*   *
402 KK   *   RBR163   *
*   *
****

ROUTE FLOW FROM COMPUTATION POINT CB1591 TO COMPUTATION POINT CB163C
MARICOPA DRAIN FROM 59TH AVE. TO 63RD AVE.
ADJUST THE SLOPE FROM .0011 TO REFLECT A VELOCITY OF LESS THAN 5 FT/SEC

HYDROGRAPH ROUTING DATA

406 RS   STORAGE ROUTING
NSTPS   2 NUMBER OF SUBREACHES
ITYP   ELEV TYPE OF INITIAL CONDITION
RSVRIC   -1.00 INITIAL CONDITION
X   0.00 WORKING R AND D COEFFICIENT

407 RC   NORMAL DEPTH CHANNEL
ANL   0.030 LEFT OVERBANK N-VALUE
ANCH   0.030 MAIN CHANNEL N-VALUE
ANR   0.030 RIGHT OVERBANK N-VALUE
RLNTH   2640. REACH LENGTH
SEL   0.0009 ENERGY SLOPE
ELMAX   0.0 MAX. ELEV. FOR STORAGE/OUTFLOW CALCULATION

CROSS-SECTION DATA

		--- LEFT OVERBANK --- +		------ MAIN CHANNEL -------			+ --- RIGHT OVERBANK ---		
409 RY	ELEVATION	997.80	997.70	997.60	992.60	992.60	997.60	997.70	997.80
408 RX	DISTANCE	0.00	10.00	20.00	45.00	135.00	160.00	170.00	180.00

***

COMPUTED STORAGE-OUTFLOW-ELEVATION DATA

STORAGE	0.00	1.52	3.08	4.68	6.33	8.03	9.77	11.56	13.40	15.27
OUTFLOW	0.00	15.54	49.60	98.00	159.15	232.14	316.38	411.46	517.10	633.10
ELEVATION	992.60	992.87	993.15	993.42	993.69	993.97	994.24	994.52	994.79	995.06
STORAGE	17.20	19.17	21.18	23.24	25.35	27.50	29.70	31.94	34.22	36.79
OUTFLOW	759.30	895.61	1041.96	1198.29	1364.60	1540.88	1727.13	1923.38	2129.66	2368.55
ELEVATION	995.34	995.61	995.88	996.16	996.43	996.71	996.98	997.25	997.53	997.80

***   ***   ***   ***   ***

HYDROGRAPH AT STATION   RBR163

PEAK FLOW	TIME		MAXIMUM AVERAGE FLOW			
			6-HR	24-HR	72-HR	24.92-HR
+ (CFS)	(HR)					
		(CFS)				
+ 576.	14.25		320.	106.	102.	102.
		(INCHES)	0.408	0.541	0.541	0.541
		(AC-FT)	159.	211.	211.	211.

PEAK STORAGE	TIME		MAXIMUM AVERAGE STORAGE			
			6-HR	24-HR	72-HR	24.92-HR
+ (AC-FT)	(HR)					
7.	14.25		5.	2.	2.	2.

PEAK STAGE	TIME		MAXIMUM AVERAGE STAGE			
			6-HR	24-HR	72-HR	24.92-HR
+ (FEET)	(HR)					
994.93	14.25		994.21	993.23	993.20	993.20

CUMULATIVE AREA =   7.30 SQ MI

*** ***

****
*   *
410 KK   *   BR263C   *
*   *
****

SUB-BASIN BR263C
24-HOUR SCS TYPE II RAINFALL WAS USED TO FIND TC & R FOR THIS BASIN
THIS BASIN USED RAINFALL REDUCTION FACTOR OF   .934
L = 1.45   Kb = .057   Adj. Slope =   19.0

SUBBASIN RUNOFF DATA

415 BA   SUBBASIN CHARACTERISTICS
TAREA   0.49 SUBBASIN AREA

PRECIPITATION DATA

32 PB   STORM   3.92 BASIN TOTAL PRECIPITATION

32 PI   INCREMENTAL PRECIPITATION PATTERN

0.00	0.00	0.00	0.00	0.00	0.00	0.00	0.00	0.00	0.00
0.00	0.00	0.00	0.00	0.00	0.00	0.00	0.00	0.00	0.00
0.00	0.00	0.00	0.00	0.00	0.00	0.00	0.00	0.00	0.00
0.00	0.00	0.00	0.00	0.00	0.00	0.00	0.00	0.00	0.00
0.00	0.00	0.00	0.00	0.00	0.00	0.00	0.00	0.00	0.00
0.00	0.00	0.00	0.00	0.00	0.00	0.00	0.00	0.00	0.00
0.00	0.00	0.00	0.00	0.00	0.00	0.00	0.00	0.00	0.00
0.00	0.00	0.00	0.00	0.00	0.00	0.00	0.00	0.00	0.00
0.00	0.00	0.00	0.00	0.00	0.00	0.00	0.00	0.00	0.00
0.00	0.00	0.00	0.00	0.00	0.00	0.00	0.00	0.00	0.00
0.00	0.00	0.00	0.00	0.00	0.00	0.00	0.00	0.00	0.00
0.00	0.00	0.00	0.00	0.00	0.00	0.00	0.00	0.00	0.00
0.00	0.00	0.00	0.00	0.00	0.00	0.00	0.01	0.00	0.01
0.01	0.01	0.01	0.01	0.01	0.01	0.01	0.01	0.03	0.03
0.03	0.09	0.09	0.09	0.01	0.01	0.01	0.01	0.01	0.01
0.01	0.01	0.01	0.01	0.01	0.01	0.00	0.00	0.00	0.00
0.00	0.00	0.00	0.00	0.00	0.00	0.00	0.00	0.00	0.00
0.00	0.00	0.00	0.00	0.00	0.00	0.00	0.00	0.00	0.00
0.00	0.00	0.00	0.00	0.00	0.00	0.00	0.00	0.00	0.00
0.00	0.00	0.00	0.00	0.00	0.00	0.00	0.00	0.00	0.00
0.00	0.00	0.00	0.00	0.00	0.00	0.00	0.00	0.00	0.00
0.00	0.00	0.00	0.00	0.00	0.00	0.00	0.00	0.00	0.00
0.00	0.00	0.00	0.00	0.00	0.00	0.00	0.00	0.00	0.00
0.00	0.00	0.00	0.00	0.00	0.00	0.00	0.00	0.00	0.00
0.00	0.00	0.00	0.00	0.00	0.00	0.00	0.00	0.00	0.00
0.00	0.00	0.00	0.00	0.00	0.00	0.00	0.00	0.00	0.00
0.00	0.00	0.00	0.00	0.00	0.00	0.00	0.00	0.00	0.00
0.00	0.00	0.00	0.00	0.00	0.00	0.00	0.00	0.00	0.00
0.00	0.00	0.00	0.00	0.00	0.00	0.00	0.00		

416 LG   GREEN AND AMPT LOSS RATE

```
                         STRTL        0.11  STARTING LOSS
                           DTH        0.25  MOISTURE DEFICIT
                          PSIF        4.70  WETTING FRONT SUCTION
                         XKSAT        0.48  HYDRAULIC CONDUCTIVITY
                         RTIMP       38.00  PERCENT IMPERVIOUS AREA

 417 UC          CLARK UNITGRAPH
                            TC        1.10  TIME OF CONCENTRATION
                             R        0.83  STORAGE COEFFICIENT

 418 UA          ACCUMULATED-AREA VS. TIME,  11 ORDINATES
                      0.0       5.0      16.0      30.0      65.0      77.0      84.0      90.0      94.0      97.0
                    100.0

                                                                   ***

                                              UNIT HYDROGRAPH PARAMETERS
                                        CLARK   TC=  1.10 HR,        R=  0.83 HR
                                       SNYDER   TP=  0.61 HR,       CP=  0.43

                                                   UNIT HYDROGRAPH
                                              59 END-OF-PERIOD ORDINATES
                    7.        26.        52.        84.       144.       205.       225.       227.       223.       217.
                  207.       196.       186.       173.       158.       143.       129.       117.       106.        96.
                   86.        78.        71.        64.        58.        52.        47.        43.        39.        35.
                   32.        29.        26.        23.        21.        19.        17.        16.        14.        13.
                   12.        11.         9.         9.         8.         7.         6.         6.         5.         5.
                    4.         4.         3.         3.         3.         3.         2.         2.         2.

       ***           ***           ***           ***           ***

                          HYDROGRAPH AT STATION    BR263C

   TOTAL RAINFALL =    3.92, TOTAL LOSS =    1.80, TOTAL EXCESS =    2.12

 PEAK FLOW      TIME                              MAXIMUM AVERAGE FLOW
                                       6-HR         24-HR        72-HR      24.92-HR
+  (CFS)        (HR)
                           (CFS)
+    294.      12.50                     89.          28.          27.          27.
                           (INCHES)   1.671        2.104        2.106        2.106
                           (AC-FT)      44.          55.          55.          55.

                           CUMULATIVE AREA =     0.49 SQ MI


*** *** *** *** *** *** *** *** *** *** *** *** *** *** *** *** *** *** *** *** *** *** *** *** *** *** *** *** *** *** *** *** *** ***

             *************
             *           *
 420 KK      *   BR263R  *
             *           *
             *************
                  DIVERT RETENTION VOLUME
                  RELAXED RETENTION VOLUME FROM 32.0 AC-FT.

     DT          DIVERSION
                        ISTAD     RET263  DIVERSION HYDROGRAPH IDENTIFICATION
                       DSTRMX      29.30  MAXIMUM VOLUME TO BE DIVERTED

     DI              INFLOW         0.00   1000.00  10000.00

     DQ        DIVERTED FLOW        0.00   1000.00  10000.00
                                                                   ***

       ***           ***           ***           ***           ***

                          DIVERSION HYDROGRAPH    RET263

 PEAK FLOW      TIME                              MAXIMUM AVERAGE FLOW
                                       6-HR         24-HR        72-HR      24.92-HR
+  (CFS)        (HR)
                           (CFS)
+    294.      12.50                     53.          15.          14.          14.
                           (INCHES)   0.996        1.112        1.112        1.112
                           (AC-FT)      26.          29.          29.          29.

                           CUMULATIVE AREA =     0.49 SQ MI

       ***           ***           ***           ***           ***

                          HYDROGRAPH AT STATION    BR263R

 PEAK FLOW      TIME                              MAXIMUM AVERAGE FLOW
                                       6-HR         24-HR        72-HR      24.92-HR
+  (CFS)        (HR)
                           (CFS)
+    218.      13.08                     47.          13.          13.          13.
                           (INCHES)   0.876        0.994        0.994        0.994
                           (AC-FT)      23.          26.          26.          26.
```

```
                           CUMULATIVE AREA =     0.49 SQ MI


*** *** *** *** *** *** *** *** *** *** *** *** *** *** *** *** *** *** *** *** *** *** *** *** *** *** *** *** *** *** *** *** *** ***

             *************
             *           *
 426 KK      *    63S    *
             *           *
             *************
                  COMBINE ROUTED FLOW FROM COMPUTATION POINT CB159C WITH RUNOFF FROM SUB-BASINS
                  BR163C AND BR263C AND ROUTED FLOW FROM COMPUTATION POINT  CB259C

 429 HC          HYDROGRAPH COMBINATION
                        ICOMP          2  NUMBER OF HYDROGRAPHS TO COMBINE

                                                                   ***

MANE2 NPLAN,NSTM        1       0

       ***           ***           ***           ***           ***

                          HYDROGRAPH AT STATION       63S

 PEAK FLOW      TIME                              MAXIMUM AVERAGE FLOW
                                       6-HR         24-HR        72-HR      24.92-HR
+  (CFS)        (HR)
                           (CFS)
+    654.      14.17                    366.         119.         115.         115.
                           (INCHES)   0.437        0.570        0.570        0.570
                           (AC-FT)     182.         237.         237.         237.

                           CUMULATIVE AREA =     7.79 SQ MI


*** *** *** *** *** *** *** *** *** *** *** *** *** *** *** *** *** *** *** *** *** *** *** *** *** *** *** *** *** *** *** *** *** ***

             *************
             *           *
 430 KK      *  BR163C   *
             *           *
             *************
                  SUB-BASIN BR163C
                  24-HOUR SCS TYPE II RAINFALL WAS USED TO FIND TC & R FOR THIS BASIN
                  THIS BASIN USED RAINFALL REDUCTION FACTOR OF  .934
                    L =  .91  Kb = .040  Adj. Slope =    9.0

            SUBBASIN RUNOFF DATA

 435 BA        SUBBASIN CHARACTERISTICS
                     TAREA        0.25  SUBBASIN AREA

               PRECIPITATION DATA

  32 PB              STORM        3.92  BASIN TOTAL PRECIPITATION

  32 PI          INCREMENTAL PRECIPITATION PATTERN
                  0.00      0.00      0.00      0.00      0.00      0.00      0.00      0.00      0.00      0.00
                  0.00      0.00      0.00      0.00      0.00      0.00      0.00      0.00      0.00      0.00
                  0.00      0.00      0.00      0.00      0.00      0.00      0.00      0.00      0.00      0.00
                  0.00      0.00      0.00      0.00      0.00      0.00      0.00      0.00      0.00      0.00
                  0.00      0.00      0.00      0.00      0.00      0.00      0.00      0.00      0.00      0.00
                  0.00      0.00      0.00      0.00      0.00      0.00      0.00      0.00      0.00      0.00
                  0.00      0.00      0.00      0.00      0.00      0.00      0.00      0.00      0.00      0.00
                  0.00      0.00      0.00      0.00      0.00      0.00      0.00      0.00      0.00      0.00
                  0.00      0.00      0.00      0.00      0.00      0.00      0.00      0.00      0.00      0.00
                  0.00      0.00      0.00      0.00      0.00      0.00      0.00      0.00      0.00      0.00
                  0.00      0.00      0.00      0.00      0.00      0.00      0.00      0.00      0.00      0.00
                  0.00      0.00      0.00      0.00      0.00      0.00      0.00      0.00      0.00      0.00
                  0.00      0.00      0.00      0.00      0.00      0.00      0.00      0.01      0.00      0.01
                  0.01      0.01      0.01      0.01      0.01      0.01      0.01      0.01      0.03      0.03
                  0.03      0.09      0.09      0.09      0.01      0.01      0.01      0.01      0.01      0.01
                  0.01      0.01      0.01      0.01      0.01      0.01      0.00      0.00      0.00      0.00
                  0.00      0.00      0.00      0.00      0.00      0.00      0.00      0.00      0.00      0.00
                  0.00      0.00      0.00      0.00      0.00      0.00      0.00      0.00      0.00      0.00
                  0.00      0.00      0.00      0.00      0.00      0.00      0.00      0.00      0.00      0.00
                  0.00      0.00      0.00      0.00      0.00      0.00      0.00      0.00      0.00      0.00
                  0.00      0.00      0.00      0.00      0.00      0.00      0.00      0.00      0.00      0.00
                  0.00      0.00      0.00      0.00      0.00      0.00      0.00      0.00      0.00      0.00
                  0.00      0.00      0.00      0.00      0.00      0.00      0.00      0.00      0.00      0.00
                  0.00      0.00      0.00      0.00      0.00      0.00      0.00      0.00      0.00      0.00
                  0.00      0.00      0.00      0.00      0.00      0.00      0.00      0.00      0.00      0.00
                  0.00      0.00      0.00      0.00      0.00      0.00      0.00      0.00      0.00      0.00
                  0.00      0.00      0.00      0.00      0.00      0.00      0.00      0.00      0.00      0.00
                  0.00      0.00      0.00      0.00      0.00      0.00      0.00      0.00      0.00      0.00
                  0.00      0.00      0.00      0.00      0.00      0.00      0.00      0.00

 436 LG        GREEN AND AMPT LOSS RATE
                     STRTL        0.22  STARTING LOSS
```

```
                   DTH         0.25  MOISTURE DEFICIT
                  PSIF         5.40  WETTING FRONT SUCTION
                 XKSAT         0.24  HYDRAULIC CONDUCTIVITY
                 RTIMP        21.00  PERCENT IMPERVIOUS AREA

 437 UC        CLARK UNITGRAPH
                    TC         0.81  TIME OF CONCENTRATION
                     R         0.59  STORAGE COEFFICIENT

 438 UA        ACCUMULATED-AREA VS. TIME,  11 ORDINATES
                  0.0        5.0       16.0       30.0       65.0       77.0       84.0       90.0       94.0       97.0
                100.0

                                                    ***

                                          UNIT HYDROGRAPH PARAMETERS
                                     CLARK   TC=  0.81 HR,        R=  0.59 HR
                                    SNYDER   TP=  0.44 HR,       CP=  0.44

                                               UNIT HYDROGRAPH
                                          42 END-OF-PERIOD ORDINATES
              7.       28.       61.      117.      160.      163.      158.      150.      139.      128.
            114.       99.       86.       74.       65.       56.       49.       42.       37.       32.
             28.       24.       21.       18.       16.       14.       12.       10.        9.        8.
              7.        6.        5.        4.        4.        3.        3.        2.        2.        2.
              2.        1.

      ***            ***            ***            ***            ***

                      HYDROGRAPH AT STATION    BR163C

   TOTAL RAINFALL =     3.92, TOTAL LOSS =     2.10, TOTAL EXCESS =     1.82

 PEAK FLOW      TIME                           MAXIMUM AVERAGE FLOW
                                      6-HR         24-HR        72-HR      24.92-HR
+   (CFS)        (HR)
                            (CFS)
+     208.      12.33                   43.          12.          12.          12.
                          (INCHES)    1.570        1.807        1.809        1.809
                           (AC-FT)      21.          25.          25.          25.

                        CUMULATIVE AREA =      0.25 SQ MI


*** *** *** *** *** *** *** *** *** *** *** *** *** *** *** *** *** *** *** *** *** *** *** *** *** *** *** *** *** *** *** *** *** ***

              **************
              *            *
 440 KK       *   BR163R   *
              *            *
              **************
                         DIVERT RETENTION VOLUME

   DT          DIVERSION
                    ISTAD      RET163  DIVERSION HYDROGRAPH IDENTIFICATION
                   DSTRMX        6.60  MAXIMUM VOLUME TO BE DIVERTED

   DI                INFLOW       0.00   1000.00  10000.00

   DQ        DIVERTED FLOW        0.00   1000.00  10000.00
                                                    ***

      ***            ***            ***            ***            ***

                      DIVERSION HYDROGRAPH    RET163

 PEAK FLOW      TIME                           MAXIMUM AVERAGE FLOW
                                      6-HR         24-HR        72-HR      24.92-HR
+   (CFS)        (HR)
                            (CFS)
+     163.      12.17                   12.           3.           3.           3.
                          (INCHES)    0.427        0.485        0.485        0.485
                           (AC-FT)       6.           7.           7.           7.

                        CUMULATIVE AREA =      0.25 SQ MI

      ***            ***            ***            ***            ***

                      HYDROGRAPH AT STATION    BR163R

 PEAK FLOW      TIME                           MAXIMUM AVERAGE FLOW
                                      6-HR         24-HR        72-HR      24.92-HR
+   (CFS)        (HR)
                            (CFS)
+     208.      12.33                   34.           9.           9.           9.
                          (INCHES)    1.250        1.323        1.323        1.323
                           (AC-FT)      17.          18.          18.          18.

                        CUMULATIVE AREA =      0.25 SQ MI


*** *** *** *** *** *** *** *** *** *** *** *** *** *** *** *** *** *** *** *** *** *** *** *** *** *** *** *** *** *** *** *** *** ***

              **************
              *            *
 445 KK       *    CB163   *
              *            *
              **************
                         COMBINE FLOWS ON THE SOUTH SIDE OF BASELINE

 447 HC          HYDROGRAPH COMBINATION
                      ICOMP            2  NUMBER OF HYDROGRAPHS TO COMBINE

                                                                  ***
MANE2 NPLAN,NSTM       1      0

      ***            ***            ***            ***            ***

                      HYDROGRAPH AT STATION    CB163

 PEAK FLOW      TIME                           MAXIMUM AVERAGE FLOW
                                      6-HR         24-HR        72-HR      24.92-HR
+   (CFS)        (HR)
                            (CFS)
+     699.      13.33                  385.         128.         124.         124.
                          (INCHES)    0.445        0.594        0.594        0.594
                           (AC-FT)     191.         255.         255.         255.

                        CUMULATIVE AREA =      8.05 SQ MI


*** *** *** *** *** *** *** *** *** *** *** *** *** *** *** *** *** *** *** *** *** *** *** *** *** *** *** *** *** *** *** *** *** ***

              **************
              *            *
 448 KK       *    RCD1C   *
              *            *
              **************
                         ROUTE FLOW FROM COMPUTATION POINT CB163C TO COMPUTATION POINT CPCD1C
                         MARICOPA DRAIN FROM 63RD AVE TO 67TH AVE.

               HYDROGRAPH ROUTING DATA

 451 RS          STORAGE ROUTING
                      NSTPS            2  NUMBER OF SUBREACHES
                       ITYP         ELEV  TYPE OF INITIAL CONDITION
                     RSVRIC        -1.00  INITIAL CONDITION
                          X         0.00 WORKING R AND D COEFFICIENT

 452 RC          NORMAL DEPTH CHANNEL
                        ANL        0.030  LEFT OVERBANK N-VALUE
                       ANCH        0.030  MAIN CHANNEL N-VALUE
                        ANR        0.030  RIGHT OVERBANK N-VALUE
                      RLNTH        2640.  REACH LENGTH
                        SEL       0.0011  ENERGY SLOPE
                      ELMAX          0.0  MAX. ELEV. FOR STORAGE/OUTFLOW CALCULATION

                                         CROSS-SECTION DATA
                        --- LEFT OVERBANK --- + ------ MAIN CHANNEL ------- + --- RIGHT OVERBANK ---
 454 RY        ELEVATION    996.20    996.10    996.00    991.00    991.00    996.00    996.10    996.20
 453 RX         DISTANCE      0.00     10.00     20.00     45.00    135.00    160.00    170.00    180.00

                                                   ***

                                    COMPUTED STORAGE-OUTFLOW-ELEVATION DATA

            STORAGE      0.00      1.52      3.08      4.68      6.33      8.03      9.77     11.56     13.40     15.27
            OUTFLOW      0.00     17.19     54.83    108.35    175.95    256.64    349.77    454.89    571.68    699.92
          ELEVATION    991.00    991.27    991.55    991.82    992.09    992.37    992.64    992.92    993.19    993.46

            STORAGE     17.20     19.17     21.18     23.24     25.35     27.50     29.70     31.94     34.22     36.79
            OUTFLOW    839.44    990.14   1151.93   1324.76   1508.63   1703.51   1909.42   2126.38   2354.43   2618.53
          ELEVATION    993.74    994.01    994.28    994.56    994.83    995.11    995.38    995.65    995.93    996.20

      ***            ***            ***            ***            ***

                      HYDROGRAPH AT STATION    RCD1C

 PEAK FLOW      TIME                           MAXIMUM AVERAGE FLOW
                                      6-HR         24-HR        72-HR      24.92-HR
+   (CFS)        (HR)
                            (CFS)
+     672.      14.25                  383.         126.         122.         122.
                          (INCHES)    0.442        0.584        0.584        0.584
                           (AC-FT)     190.         251.         251.         251.

PEAK STORAGE    TIME                           MAXIMUM AVERAGE STORAGE
                                      6-HR         24-HR        72-HR      24.92-HR
```

```
+ (AC-FT)      (HR)
     7.        14.25                    5.          2.          2.          2.

  PEAK STAGE    TIME                          MAXIMUM AVERAGE STAGE
                                      6-HR        24-HR        72-HR      24.92-HR
+   (FEET)      (HR)
   993.40      14.25                 992.68      991.65      991.63      991.63

                        CUMULATIVE AREA =     8.05 SQ MI

*** *** *** *** *** *** *** *** *** *** *** *** *** *** *** *** *** *** *** *** *** *** *** *** *** *** *** *** *** *** *** *** ***

            **************
            *            *
 455 KK     *    BR67C   *
            *            *
            **************
                          SUB-BASIN BR67C
                          24-HOUR SCS TYPE II RAINFALL WAS USED TO FIND TC & R FOR THIS BASIN
                          THIS BASIN USED RAINFALL REDUCTION FACTOR OF  .934
                            L =  .79  Kb = .054  Adj. Slope =     5.0

           SUBBASIN RUNOFF DATA

 460 BA      SUBBASIN CHARACTERISTICS
                TAREA         0.13  SUBBASIN AREA

             PRECIPITATION DATA

  32 PB         STORM         3.92  BASIN TOTAL PRECIPITATION

  32 PI       INCREMENTAL PRECIPITATION PATTERN
                0.00     0.00     0.00     0.00     0.00     0.00     0.00     0.00     0.00     0.00
                0.00     0.00     0.00     0.00     0.00     0.00     0.00     0.00     0.00     0.00
                0.00     0.00     0.00     0.00     0.00     0.00     0.00     0.00     0.00     0.00
                0.00     0.00     0.00     0.00     0.00     0.00     0.00     0.00     0.00     0.00
                0.00     0.00     0.00     0.00     0.00     0.00     0.00     0.00     0.00     0.00
                0.00     0.00     0.00     0.00     0.00     0.00     0.00     0.00     0.00     0.00
                0.00     0.00     0.00     0.00     0.00     0.00     0.00     0.00     0.00     0.00
                0.00     0.00     0.00     0.00     0.00     0.00     0.00     0.00     0.00     0.00
                0.00     0.00     0.00     0.00     0.00     0.00     0.00     0.00     0.00     0.00
                0.00     0.00     0.00     0.00     0.00     0.00     0.00     0.00     0.00     0.00
                0.00     0.00     0.00     0.00     0.00     0.00     0.00     0.00     0.00     0.00
                0.00     0.00     0.00     0.00     0.00     0.00     0.00     0.00     0.00     0.00
                0.00     0.00     0.00     0.00     0.00     0.00     0.00     0.01     0.00     0.01
                0.01     0.01     0.01     0.01     0.01     0.01     0.01     0.01     0.03     0.03
                0.03     0.09     0.09     0.09     0.01     0.01     0.01     0.01     0.01     0.01
                0.01     0.01     0.01     0.01     0.01     0.01     0.00     0.00     0.00     0.00
                0.00     0.00     0.00     0.00     0.00     0.00     0.00     0.00     0.00     0.00
                0.00     0.00     0.00     0.00     0.00     0.00     0.00     0.00     0.00     0.00
                0.00     0.00     0.00     0.00     0.00     0.00     0.00     0.00     0.00     0.00
                0.00     0.00     0.00     0.00     0.00     0.00     0.00     0.00     0.00     0.00
                0.00     0.00     0.00     0.00     0.00     0.00     0.00     0.00     0.00     0.00
                0.00     0.00     0.00     0.00     0.00     0.00     0.00     0.00     0.00     0.00
                0.00     0.00     0.00     0.00     0.00     0.00     0.00     0.00     0.00     0.00
                0.00     0.00     0.00     0.00     0.00     0.00     0.00     0.00     0.00     0.00
                0.00     0.00     0.00     0.00     0.00     0.00     0.00     0.00     0.00     0.00
                0.00     0.00     0.00     0.00     0.00     0.00     0.00     0.00     0.00     0.00
                0.00     0.00     0.00     0.00     0.00     0.00     0.00     0.00     0.00     0.00
                0.00     0.00     0.00     0.00     0.00     0.00     0.00     0.00     0.00     0.00
                0.00     0.00     0.00     0.00     0.00     0.00     0.00     0.00

 461 LG      GREEN AND AMPT LOSS RATE
                STRTL         0.30  STARTING LOSS
                  DTH         0.15  MOISTURE DEFICIT
                 PSIF         7.00  WETTING FRONT SUCTION
                XKSAT         0.14  HYDRAULIC CONDUCTIVITY
                RTIMP        15.00  PERCENT IMPERVIOUS AREA

 462 UC      CLARK UNITGRAPH
                   TC         1.16  TIME OF CONCENTRATION
                    R         1.17  STORAGE COEFFICIENT

 463 UA      ACCUMULATED-AREA VS. TIME,  11 ORDINATES
                0.0       5.0      16.0      30.0      65.0      77.0      84.0      90.0      94.0      97.0
              100.0

                                                  ***

                                         UNIT HYDROGRAPH PARAMETERS
                                     CLARK   TC=  1.16 HR,        R=  1.17 HR
                                   SNYDER    TP=  0.72 HR,       CP=  0.39

                                              UNIT HYDROGRAPH
                                         81 END-OF-PERIOD ORDINATES
       1.        4.        9.       15.       24.       36.       43.       45.       45.       45.
      44.       43.       41.       40.       38.       35.       33.       30.       28.       26.
      25.       23.       21.       20.       19.       17.       16.       15.       14.       13.
      12.       11.       10.       10.        9.        8.        8.        7.        7.        6.
       6.        6.        5.        5.        4.        4.        4.        4.        3.        3.
       3.        3.        3.        2.        2.        2.        2.        2.        2.        2.
```

```
       1.        1.        1.        1.        1.        1.        1.        1.        1.        1.
       1.        1.        1.        1.        1.        0.        0.        0.        0.        0.
       0.

       ***             ***             ***             ***             ***

                            HYDROGRAPH AT STATION     BR67C

      TOTAL RAINFALL =    3.92, TOTAL LOSS =    2.04, TOTAL EXCESS =    1.88

    PEAK FLOW     TIME                      MAXIMUM AVERAGE FLOW
                                      6-HR        24-HR        72-HR      24.92-HR
+    (CFS)        (HR)
                              (CFS)
+      67.        12.67                  23.           6.           6.           6.
                           (INCHES)    1.679        1.867        1.868        1.868
                            (AC-FT)      11.          13.          13.          13.

                           CUMULATIVE AREA =     0.13 SQ MI

*** *** *** *** *** *** *** *** *** *** *** *** *** *** *** *** *** *** *** *** *** *** *** *** *** *** *** *** *** *** *** *** ***

               **************
               *            *
 465 KK        *   RCD1C2   *
               *            *
               **************
                             ROUTE FLOW FROM SUBASIN BR67C TO COMPUTATION POINT CPCD1C
                            CROSS-SECTION WAS REVISED TO REFLECT URBANIZED CONDITIONS(CHANNEL)

               HYDROGRAPH ROUTING DATA

 468 RS           STORAGE ROUTING
                       NSTPS         1  NUMBER OF SUBREACHES
                        ITYP      ELEV  TYPE OF INITIAL CONDITION
                      RSVRIC     -1.00  INITIAL CONDITION
                           X      0.00 WORKING R AND D COEFFICIENT

 469 RC           NORMAL DEPTH CHANNEL
                         ANL     0.035  LEFT OVERBANK N-VALUE
                        ANCH     0.035  MAIN CHANNEL N-VALUE
                         ANR     0.035  RIGHT OVERBANK N-VALUE
                       RLNTH     2600.  REACH LENGTH
                         SEL    0.0014  ENERGY SLOPE
                       ELMAX       0.0  MAX. ELEV. FOR STORAGE/OUTFLOW CALCULATION

                                                 CROSS-SECTION DATA
                               --- LEFT OVERBANK --- + ------ MAIN CHANNEL ------- + --- RIGHT OVERBANK ---
 471 RY          ELEVATION    1000.00    1000.00    1000.00     995.00     995.00    1000.00    1000.00    1000.00
 470 RX           DISTANCE       0.00      40.00      60.00      85.00      95.00     120.00     140.00     160.00

                                                        ***

                                     COMPUTED STORAGE-OUTFLOW-ELEVATION DATA

              STORAGE       0.00       0.18       0.40       0.66       0.96       1.30       1.69       2.11       2.58       3.09
              OUTFLOW       0.00       1.81       6.06      12.62      21.59      33.15      47.46      64.70      85.06     108.70
            ELEVATION     995.00     995.26     995.53     995.79     996.05     996.32     996.58     996.84     997.11     997.37

              STORAGE       3.64       4.23       4.86       5.54       6.25       7.01       7.81       8.64       9.53      10.45
              OUTFLOW     135.81     166.56     201.11     239.63     282.28     329.22     380.61     436.60     497.35     563.02
            ELEVATION     997.63     997.90     998.16     998.42     998.68     998.95     999.21     999.47     999.74    1000.00

       ***             ***             ***             ***             ***

                            HYDROGRAPH AT STATION     RCD1C2

    PEAK FLOW     TIME                      MAXIMUM AVERAGE FLOW
                                      6-HR        24-HR        72-HR      24.92-HR
+    (CFS)        (HR)
                              (CFS)
+      59.        13.08                  23.           6.           6.           6.
                           (INCHES)    1.667        1.859        1.860        1.860
                            (AC-FT)      11.          13.          13.          13.

  PEAK STORAGE    TIME                    MAXIMUM AVERAGE STORAGE
                                      6-HR        24-HR        72-HR      24.92-HR
+  (AC-FT)        (HR)
       2.         13.08                   1.           0.           0.           0.

  PEAK STAGE      TIME                     MAXIMUM AVERAGE STAGE
                                      6-HR        24-HR        72-HR      24.92-HR
+   (FEET)        (HR)
    996.76        13.08               995.97       995.34       995.32       995.32

                           CUMULATIVE AREA =     0.13 SQ MI
```

```
*** *** *** *** *** *** *** *** *** *** *** *** *** *** *** *** *** *** *** *** *** *** *** *** *** *** *** *** *** *** *** *** ***

              *************
              *           *
472 KK        *    CD1C   *
              *           *
              *************
                          SUB-BASIN CD1C
                          24-HOUR SCS TYPE II RAINFALL WAS USED TO FIND TC & R FOR THIS BASIN
                          THIS BASIN USED RAINFALL REDUCTION FACTOR OF  .934
                             L =  .90  Kb = .049  Adj. Slope =   27.0

          SUBBASIN RUNOFF DATA

477 BA      SUBBASIN CHARACTERISTICS
                  TAREA          0.46  SUBBASIN AREA

            PRECIPITATION DATA

 32 PB            STORM          3.92  BASIN TOTAL PRECIPITATION

 32 PI        INCREMENTAL PRECIPITATION PATTERN
                 0.00      0.00      0.00      0.00      0.00      0.00      0.00      0.00      0.00      0.00
                 0.00      0.00      0.00      0.00      0.00      0.00      0.00      0.00      0.00      0.00
                 0.00      0.00      0.00      0.00      0.00      0.00      0.00      0.00      0.00      0.00
                 0.00      0.00      0.00      0.00      0.00      0.00      0.00      0.00      0.00      0.00
                 0.00      0.00      0.00      0.00      0.00      0.00      0.00      0.00      0.00      0.00
                 0.00      0.00      0.00      0.00      0.00      0.00      0.00      0.00      0.00      0.00
                 0.00      0.00      0.00      0.00      0.00      0.00      0.00      0.00      0.00      0.00
                 0.00      0.00      0.00      0.00      0.00      0.00      0.00      0.00      0.00      0.00
                 0.00      0.00      0.00      0.00      0.00      0.00      0.00      0.00      0.00      0.00
                 0.00      0.00      0.00      0.00      0.00      0.00      0.00      0.00      0.00      0.00
                 0.00      0.00      0.00      0.00      0.00      0.00      0.00      0.00      0.00      0.00
                 0.00      0.00      0.00      0.00      0.00      0.00      0.00      0.00      0.00      0.00
                 0.00      0.00      0.00      0.00      0.00      0.00      0.00      0.01      0.00      0.01
                 0.01      0.01      0.01      0.01      0.01      0.01      0.01      0.01      0.03      0.03
                 0.03      0.09      0.09      0.09      0.01      0.01      0.01      0.01      0.01      0.01
                 0.01      0.01      0.01      0.01      0.01      0.01      0.00      0.00      0.00      0.00
                 0.00      0.00      0.00      0.00      0.00      0.00      0.00      0.00      0.00      0.00
                 0.00      0.00      0.00      0.00      0.00      0.00      0.00      0.00      0.00      0.00
                 0.00      0.00      0.00      0.00      0.00      0.00      0.00      0.00      0.00      0.00
                 0.00      0.00      0.00      0.00      0.00      0.00      0.00      0.00      0.00      0.00
                 0.00      0.00      0.00      0.00      0.00      0.00      0.00      0.00      0.00      0.00
                 0.00      0.00      0.00      0.00      0.00      0.00      0.00      0.00      0.00      0.00
                 0.00      0.00      0.00      0.00      0.00      0.00      0.00      0.00      0.00      0.00
                 0.00      0.00      0.00      0.00      0.00      0.00      0.00      0.00      0.00      0.00
                 0.00      0.00      0.00      0.00      0.00      0.00      0.00      0.00      0.00      0.00
                 0.00      0.00      0.00      0.00      0.00      0.00      0.00      0.00      0.00      0.00
                 0.00      0.00      0.00      0.00      0.00      0.00      0.00      0.00      0.00      0.00
                 0.00      0.00      0.00      0.00      0.00      0.00      0.00      0.00      0.00      0.00
                 0.00      0.00      0.00      0.00      0.00      0.00      0.00      0.00

478 LG      GREEN AND AMPT LOSS RATE
                  STRTL          0.19  STARTING LOSS
                    DTH          0.25  MOISTURE DEFICIT
                   PSIF          4.70  WETTING FRONT SUCTION
                  XKSAT          0.41  HYDRAULIC CONDUCTIVITY
                  RTIMP         30.00  PERCENT IMPERVIOUS AREA

479 UC      CLARK UNITGRAPH
                     TC          0.58  TIME OF CONCENTRATION
                      R          0.29  STORAGE COEFFICIENT

480 UA      ACCUMULATED-AREA VS. TIME,  11 ORDINATES
                  0.0       5.0      16.0      30.0      65.0      77.0      84.0      90.0      94.0      97.0
                100.0

                                                                         ***

                                          UNIT HYDROGRAPH PARAMETERS
                                     CLARK   TC=  0.58 HR,        R=  0.29 HR
                                    SNYDER   TP=  0.32 HR,       CP=  0.57

                                                    UNIT HYDROGRAPH
                                             22 END-OF-PERIOD ORDINATES
           44.       159.       384.       532.       498.       435.       368.       295.       221.       165.
          124.        93.        69.        52.        39.        29.        22.        16.        12.         9.
            7.         5.

     ***            ***            ***            ***            ***

                        HYDROGRAPH AT STATION      CD1C

   TOTAL RAINFALL =     3.92, TOTAL LOSS =     2.00, TOTAL EXCESS =     1.93

  PEAK FLOW      TIME                              MAXIMUM AVERAGE FLOW
                                        6-HR          24-HR          72-HR       24.92-HR
+   (CFS)        (HR)
                               (CFS)
+     552.       12.25                   79.            24.            23.            23.
                             (INCHES)   1.577          1.916          1.918          1.918
                              (AC-FT)     39.            47.            47.            47.

                               CUMULATIVE AREA =     0.46 SQ MI
```

```
*** *** *** *** *** *** *** *** *** *** *** *** *** *** *** *** *** *** *** *** *** *** *** *** *** *** *** *** *** *** *** *** ***

               *************
               *           *
482 KK         *    CD1R   *
               *           *
               *************
                         DIVERT RETENTION VOLUME

   DT          DIVERSION
                    ISTAD        RET1C  DIVERSION HYDROGRAPH IDENTIFICATION
                   DSTRMX        32.00  MAXIMUM VOLUME TO BE DIVERTED

   DI               INFLOW        0.00  1000.00  10000.00

   DQ         DIVERTED FLOW       0.00  1000.00  10000.00

                                                                         ***

     ***            ***            ***            ***            ***

                        DIVERSION HYDROGRAPH     RET1C

  PEAK FLOW      TIME                              MAXIMUM AVERAGE FLOW
                                        6-HR          24-HR          72-HR       24.92-HR
+   (CFS)        (HR)
                               (CFS)
+     552.       12.25                   60.            16.            16.            16.
                             (INCHES)   1.195          1.293          1.293          1.293
                              (AC-FT)     30.            32.            32.            32.

                               CUMULATIVE AREA =     0.46 SQ MI

     ***            ***            ***            ***            ***

                        HYDROGRAPH AT STATION      CD1R

  PEAK FLOW      TIME                              MAXIMUM AVERAGE FLOW
                                        6-HR          24-HR          72-HR       24.92-HR
+   (CFS)        (HR)
                               (CFS)
+     259.       12.58                   27.             8.             8.             8.
                             (INCHES)   0.534          0.625          0.625          0.625
                              (AC-FT)     13.            15.            15.            15.

                               CUMULATIVE AREA =     0.46 SQ MI


*** *** *** *** *** *** *** *** *** *** *** *** *** *** *** *** *** *** *** *** *** *** *** *** *** *** *** *** *** *** *** *** ***

               *************
               *           *
487 KK         *  CPCD1C   *
               *           *
               *************
                         COMBINE ROUTED FLOWS FROM COMPUTATION POINT CB163C AND SUB-BASIN BR67C
                         WITH RUNOFF FROM SUB-BASIN CD1C

490 HC         HYDROGRAPH COMBINATION
                    ICOMP             3  NUMBER OF HYDROGRAPHS TO COMBINE

                                                                         ***
MANE2 NPLAN,NSTM        1       0
MANE2 NPLAN,NSTM        1       0
     ***            ***            ***            ***            ***

                        HYDROGRAPH AT STATION    CPCD1C

  PEAK FLOW      TIME                              MAXIMUM AVERAGE FLOW
                                        6-HR          24-HR          72-HR       24.92-HR
+   (CFS)        (HR)
                               (CFS)
+     742.       13.50                  428.           140.           135.           135.
                             (INCHES)   0.461          0.605          0.605          0.605
                              (AC-FT)    212.           279.           279.           279.

                               CUMULATIVE AREA =     8.64 SQ MI


*** *** *** *** *** *** *** *** *** *** *** *** *** *** *** *** *** *** *** *** *** *** *** *** *** *** *** *** *** *** *** *** ***

               *************
```

```
               *             *
491 KK         *   RCD2C1    *
               *             *
               ***************

                              ROUTE FLOW FROM COMPUTATION POINT CPCD1C TO COMPUTATION POINT CIRSMC
                              MARIOCPA DRAIN FROM 67TH AVE TO 75TH AVE.
                              ADJUST SLOPE FROM .0011 TO REFLECT A VELOCITY OF LESS THAN 5 FT/SEC

                  HYDROGRAPH ROUTING DATA

495 RS                STORAGE ROUTING
                           NSTPS           3  NUMBER OF SUBREACHES
                            ITYP        ELEV  TYPE OF INITIAL CONDITION
                          RSVRIC       -1.00  INITIAL CONDITION
                               X        0.00 WORKING R AND D COEFFICIENT

496 RC                NORMAL DEPTH CHANNEL
                             ANL       0.030  LEFT OVERBANK N-VALUE
                            ANCH       0.030  MAIN CHANNEL N-VALUE
                             ANR       0.030  RIGHT OVERBANK N-VALUE
                           RLNTH       3600.  REACH LENGTH
                             SEL      0.0007  ENERGY SLOPE
                           ELMAX         0.0  MAX. ELEV. FOR STORAGE/OUTFLOW CALCULATION

                                             CROSS-SECTION DATA
                              --- LEFT OVERBANK --- + ------ MAIN CHANNEL ------- + --- RIGHT OVERBANK ---
498 RY          ELEVATION     990.20     990.10     990.00     985.00     985.00     990.00     990.10     990.20
497 RX          DISTANCE        0.00      10.00      20.00      45.00     155.00     180.00     190.00     200.00

                                                                   ***

                                          COMPUTED STORAGE-OUTFLOW-ELEVATION DATA

             STORAGE       0.00       2.52       5.10       7.74      10.45      13.21      16.04      18.93      21.88      24.90
             OUTFLOW       0.00      16.74      53.36     105.33     170.88     248.96     338.91     440.23     552.58     675.70
           ELEVATION     985.00     985.27     985.55     985.82     986.09     986.37     986.64     986.92     987.19     987.46

             STORAGE      27.98      31.11      34.31      37.57      40.90      44.28      47.73      51.24      54.81      58.76
             OUTFLOW     809.37     953.45    1107.83    1272.40    1447.11    1631.92    1826.80    2031.72    2246.69    2492.51
           ELEVATION     987.74     988.01     988.28     988.56     988.83     989.11     989.38     989.65     989.93     990.20

       ***            ***            ***            ***            ***

                         HYDROGRAPH AT STATION    RCD2C1

 PEAK FLOW       TIME                             MAXIMUM AVERAGE FLOW
                                        6-HR        24-HR        72-HR       24.92-HR
+  (CFS)         (HR)
                             (CFS)
+      715.      14.42                  420.         137.         132.          132.
                          (INCHES)      0.452        0.589        0.589         0.589
                           (AC-FT)      208.         271.         271.          271.

PEAK STORAGE     TIME                           MAXIMUM AVERAGE STORAGE
                                        6-HR        24-HR        72-HR       24.92-HR
+  (AC-FT)       (HR)
        9.       14.42                    6.           2.           2.            2.

 PEAK STAGE      TIME                             MAXIMUM AVERAGE STAGE
                                        6-HR        24-HR        72-HR       24.92-HR
+  (FEET)        (HR)
     987.54      14.42                  986.82       985.69       985.67        985.67

                        CUMULATIVE AREA =     8.64 SQ MI


*** *** *** *** *** *** *** *** *** *** *** *** *** *** *** *** *** *** *** *** *** *** *** *** *** *** *** *** *** *** *** *** *** ***


               ***************
               *             *
499 KK         *    ER55B    *
               *             *
               ***************
                             SUB-BASIN ER55B
                             24-HOUR SCS TYPE II RAINFALL WAS USED TO FIND TC & R FOR THIS BASIN
                             THIS BASIN USED RAINFALL REDUCTION FACTOR OF  .934
                               L =  .79  Kb = .050  Adj. Slope =     8.0

                  SUBBASIN RUNOFF DATA

504 BA                SUBBASIN CHARACTERISTICS
                           TAREA        0.26  SUBBASIN AREA

                      PRECIPITATION DATA

 32 PB                     STORM        3.92  BASIN TOTAL PRECIPITATION

 32 PI                  INCREMENTAL PRECIPITATION PATTERN
                            0.00       0.00       0.00       0.00       0.00       0.00       0.00       0.00       0.00       0.00
                            0.00       0.00       0.00       0.00       0.00       0.00       0.00       0.00       0.00       0.00
                            0.00       0.00       0.00       0.00       0.00       0.00       0.00       0.00       0.00       0.00
                            0.00       0.00       0.00       0.00       0.00       0.00       0.00       0.00       0.00       0.00
                            0.00       0.00       0.00       0.00       0.00       0.00       0.00       0.00       0.00       0.00
                            0.00       0.00       0.00       0.00       0.00       0.00       0.00       0.00       0.00       0.00
                            0.00       0.00       0.00       0.00       0.00       0.00       0.00       0.00       0.00       0.00
                            0.00       0.00       0.00       0.00       0.00       0.00       0.00       0.00       0.00       0.00
                            0.00       0.00       0.00       0.00       0.00       0.00       0.00       0.00       0.00       0.00
                            0.00       0.00       0.00       0.00       0.00       0.00       0.00       0.00       0.00       0.00
                            0.00       0.00       0.00       0.00       0.00       0.00       0.00       0.00       0.00       0.00
                            0.00       0.00       0.00       0.00       0.00       0.00       0.00       0.00       0.00       0.00
                            0.00       0.00       0.00       0.00       0.00       0.00       0.00       0.01       0.00       0.01
                            0.01       0.01       0.01       0.01       0.01       0.01       0.01       0.01       0.03       0.03
                            0.03       0.09       0.09       0.09       0.01       0.01       0.01       0.01       0.01       0.01
                            0.01       0.01       0.01       0.01       0.01       0.01       0.00       0.00       0.00       0.00
                            0.00       0.00       0.00       0.00       0.00       0.00       0.00       0.00       0.00       0.00
                            0.00       0.00       0.00       0.00       0.00       0.00       0.00       0.00       0.00       0.00
                            0.00       0.00       0.00       0.00       0.00       0.00       0.00       0.00       0.00       0.00
                            0.00       0.00       0.00       0.00       0.00       0.00       0.00       0.00       0.00       0.00
                            0.00       0.00       0.00       0.00       0.00       0.00       0.00       0.00       0.00       0.00
                            0.00       0.00       0.00       0.00       0.00       0.00       0.00       0.00       0.00       0.00
                            0.00       0.00       0.00       0.00       0.00       0.00       0.00       0.00       0.00       0.00
                            0.00       0.00       0.00       0.00       0.00       0.00       0.00       0.00       0.00       0.00
                            0.00       0.00       0.00       0.00       0.00       0.00       0.00       0.00       0.00       0.00
                            0.00       0.00       0.00       0.00       0.00       0.00       0.00       0.00       0.00       0.00
                            0.00       0.00       0.00       0.00       0.00       0.00       0.00       0.00       0.00       0.00
                            0.00       0.00       0.00       0.00       0.00       0.00       0.00       0.00

505 LG                GREEN AND AMPT LOSS RATE
                           STRTL        0.26  STARTING LOSS
                             DTH        0.26  MOISTURE DEFICIT
                            PSIF        6.00  WETTING FRONT SUCTION
                           XKSAT        0.21  HYDRAULIC CONDUCTIVITY
                           RTIMP       27.00  PERCENT IMPERVIOUS AREA

506 UC                CLARK UNITGRAPH
                              TC        0.91  TIME OF CONCENTRATION
                               R        0.60  STORAGE COEFFICIENT

507 UA                ACCUMULATED-AREA VS. TIME,  11 ORDINATES
                             0.0        5.0       16.0       30.0       65.0       77.0       84.0       90.0       94.0       97.0
                           100.0

                                                                 ***

                                                          UNIT HYDROGRAPH PARAMETERS
                                                CLARK    TC=  0.91 HR,        R=  0.60 HR
                                               SNYDER    TP=  0.50 HR,       CP=  0.47

                                                              UNIT HYDROGRAPH
                                                        43 END-OF-PERIOD ORDINATES
                            6.        23.        49.        93.       140.       156.       155.       149.       140.       130.
                          119.       107.        93.        81.        71.        61.        53.        46.        40.        35.
                           31.        27.        23.        20.        18.        15.        13.        12.        10.         9.
                            8.         7.         6.         5.         4.         4.         3.         3.         2.         2.
                            2.         2.         1.

       ***            ***            ***            ***            ***

                         HYDROGRAPH AT STATION     ER55B

     TOTAL RAINFALL =      3.92, TOTAL LOSS =      1.94, TOTAL EXCESS =      1.99

 PEAK FLOW       TIME                             MAXIMUM AVERAGE FLOW
                                        6-HR        24-HR        72-HR       24.92-HR
+  (CFS)         (HR)
                             (CFS)
+      205.      12.42                   46.          14.          13.           13.
                          (INCHES)      1.667        1.972        1.974         1.974
                           (AC-FT)        23.          27.          27.           27.

                        CUMULATIVE AREA =     0.26 SQ MI


*** *** *** *** *** *** *** *** *** *** *** *** *** *** *** *** *** *** *** *** *** *** *** *** *** *** *** *** *** *** *** *** *** ***


               ***************
               *             *
509 KK         *    ER55R    *
               *             *
               ***************
                            DIVERT RETENTION VOLUME

  DT                  DIVERSION
                           ISTAD       RET55  DIVERSION HYDROGRAPH IDENTIFICATION
                          DSTRMX       19.20  MAXIMUM VOLUME TO BE DIVERTED

  DI                      INFLOW        0.00    1000.00   10000.00

  DQ                DIVERTED FLOW       0.00    1000.00   10000.00

                                                                 ***
```

*** *** *** *** ***

DIVERSION HYDROGRAPH RET55

PEAK FLOW	TIME		MAXIMUM AVERAGE FLOW			
			6-HR	24-HR	72-HR	24.92-HR
+ (CFS)	(HR)					
		(CFS)				
+ 205.	12.42		36.	10.	9.	9.
		(INCHES)	1.315	1.406	1.406	1.406
		(AC-FT)	18.	19.	19.	19.

CUMULATIVE AREA = 0.26 SQ MI

*** *** *** *** ***

HYDROGRAPH AT STATION ER55R

PEAK FLOW	TIME		MAXIMUM AVERAGE FLOW			
			6-HR	24-HR	72-HR	24.92-HR
+ (CFS)	(HR)					
		(CFS)				
+ 82.	13.25		13.	4.	4.	4.
		(INCHES)	0.490	0.568	0.568	0.568
		(AC-FT)	7.	8.	8.	8.

CUMULATIVE AREA = 0.26 SQ MI

*** ***

```
               *************
               *           *
514 KK         *   RE59B   *
               *           *
               *************
```

ROUTE FLOWS FROM CONCENTRATION POINT CRE55B TO CP CER59B
ROUTING REVISED TO REFLECT URBANIZED CONDITIONS

HYDROGRAPH ROUTING DATA

517 RS STORAGE ROUTING

NSTPS	2	NUMBER OF SUBREACHES
ITYP	ELEV	TYPE OF INITIAL CONDITION
RSVRIC	-1.00	INITIAL CONDITION
X	0.00	WORKING R AND D COEFFICIENT

518 RC NORMAL DEPTH CHANNEL

ANL	0.035	LEFT OVERBANK N-VALUE
ANCH	0.035	MAIN CHANNEL N-VALUE
ANR	0.035	RIGHT OVERBANK N-VALUE
RLNTH	2600.	REACH LENGTH
SEL	0.0020	ENERGY SLOPE
ELMAX	0.0	MAX. ELEV. FOR STORAGE/OUTFLOW CALCULATION

CROSS-SECTION DATA

		--- LEFT OVERBANK --- +		------ MAIN CHANNEL ------- +			--- RIGHT OVERBANK ---	
520 RY	ELEVATION	1026.00	1024.00	1023.00	1020.00	1020.00	1023.00	1024.00	1026.00
519 RX	DISTANCE	0.00	30.00	50.00	55.00	65.00	70.00	90.00	120.00

***

COMPUTED STORAGE-OUTFLOW-ELEVATION DATA

STORAGE	0.00	0.20	0.42	0.65	0.91	1.19	1.49	1.81	2.14	2.50
OUTFLOW	0.00	2.81	9.03	18.02	29.61	43.73	60.41	79.67	101.56	126.16
ELEVATION	1020.00	1020.32	1020.63	1020.95	1021.26	1021.58	1021.89	1022.21	1022.53	1022.84
STORAGE	2.90	3.52	4.37	5.46	6.74	8.20	9.84	11.65	13.65	15.82
OUTFLOW	156.36	195.06	243.03	303.20	377.48	466.17	570.50	691.62	830.69	988.83
ELEVATION	1023.16	1023.47	1023.79	1024.11	1024.42	1024.74	1025.05	1025.37	1025.68	1026.00

*** *** *** *** ***

HYDROGRAPH AT STATION RE59B

PEAK FLOW	TIME		MAXIMUM AVERAGE FLOW			
			6-HR	24-HR	72-HR	24.92-HR
+ (CFS)	(HR)					
		(CFS)				
+ 55.	13.67		13.	4.	4.	4.
		(INCHES)	0.477	0.560	0.560	0.560
		(AC-FT)	7.	8.	8.	8.

PEAK STORAGE	TIME	MAXIMUM AVERAGE STORAGE			
		6-HR	24-HR	72-HR	24.92-HR
+ (AC-FT)	(HR)				
1.	13.67	0.	0.	0.	0.

PEAK STAGE	TIME	MAXIMUM AVERAGE STAGE			
		6-HR	24-HR	72-HR	24.92-HR
+ (FEET)	(HR)				
1021.79	13.67	1020.69	1020.24	1020.23	1020.23

CUMULATIVE AREA = 0.26 SQ MI

*** ***

```
               *************
               *           *
521 KK         *   ER59B   *
               *           *
               *************
```

SUB-BASIN ER59B
24-HOUR SCS TYPE II RAINFALL WAS USED TO FIND TC & R FOR THIS BASIN
THIS BASIN USED RAINFALL REDUCTION FACTOR OF .934
L = .95 Kb = .030 Adj. Slope = 8.0

SUBBASIN RUNOFF DATA

526 BA SUBBASIN CHARACTERISTICS
TAREA 0.26 SUBBASIN AREA

PRECIPITATION DATA

32 PB STORM 3.92 BASIN TOTAL PRECIPITATION

32 PI INCREMENTAL PRECIPITATION PATTERN

0.00	0.00	0.00	0.00	0.00	0.00	0.00	0.00	0.00	0.00
0.00	0.00	0.00	0.00	0.00	0.00	0.00	0.00	0.00	0.00
0.00	0.00	0.00	0.00	0.00	0.00	0.00	0.00	0.00	0.00
0.00	0.00	0.00	0.00	0.00	0.00	0.00	0.00	0.00	0.00
0.00	0.00	0.00	0.00	0.00	0.00	0.00	0.00	0.00	0.00
0.00	0.00	0.00	0.00	0.00	0.00	0.00	0.00	0.00	0.00
0.00	0.00	0.00	0.00	0.00	0.00	0.00	0.00	0.00	0.00
0.00	0.00	0.00	0.00	0.00	0.00	0.00	0.00	0.00	0.00
0.00	0.00	0.00	0.00	0.00	0.00	0.00	0.00	0.00	0.00
0.00	0.00	0.00	0.00	0.00	0.00	0.00	0.00	0.00	0.00
0.00	0.00	0.00	0.00	0.00	0.00	0.00	0.00	0.00	0.00
0.00	0.00	0.00	0.00	0.00	0.00	0.00	0.00	0.00	0.00
0.00	0.00	0.00	0.00	0.00	0.00	0.00	0.01	0.00	0.01
0.01	0.01	0.01	0.01	0.01	0.01	0.01	0.01	0.03	0.03
0.03	0.09	0.09	0.09	0.01	0.01	0.01	0.01	0.01	0.01
0.01	0.01	0.01	0.01	0.01	0.01	0.00	0.00	0.00	0.00
0.00	0.00	0.00	0.00	0.00	0.00	0.00	0.00	0.00	0.00
0.00	0.00	0.00	0.00	0.00	0.00	0.00	0.00	0.00	0.00
0.00	0.00	0.00	0.00	0.00	0.00	0.00	0.00	0.00	0.00
0.00	0.00	0.00	0.00	0.00	0.00	0.00	0.00	0.00	0.00
0.00	0.00	0.00	0.00	0.00	0.00	0.00	0.00	0.00	0.00
0.00	0.00	0.00	0.00	0.00	0.00	0.00	0.00	0.00	0.00
0.00	0.00	0.00	0.00	0.00	0.00	0.00	0.00	0.00	0.00
0.00	0.00	0.00	0.00	0.00	0.00	0.00	0.00	0.00	0.00
0.00	0.00	0.00	0.00	0.00	0.00	0.00	0.00	0.00	0.00
0.00	0.00	0.00	0.00	0.00	0.00	0.00	0.00	0.00	0.00
0.00	0.00	0.00	0.00	0.00	0.00	0.00	0.00	0.00	0.00
0.00	0.00	0.00	0.00	0.00	0.00	0.00	0.00	0.00	0.00
0.00	0.00	0.00	0.00	0.00	0.00	0.00	0.00		

527 LG GREEN AND AMPT LOSS RATE

STRTL	0.13	STARTING LOSS
DTH	0.25	MOISTURE DEFICIT
PSIF	5.00	WETTING FRONT SUCTION
XKSAT	0.37	HYDRAULIC CONDUCTIVITY
RTIMP	71.00	PERCENT IMPERVIOUS AREA

528 UC CLARK UNITGRAPH

TC	0.67	TIME OF CONCENTRATION
R	0.49	STORAGE COEFFICIENT

529 UA ACCUMULATED-AREA VS. TIME, 11 ORDINATES

0.0	5.0	16.0	30.0	65.0	77.0	84.0	90.0	94.0	97.0
100.0									

***

UNIT HYDROGRAPH PARAMETERS
CLARK TC= 0.67 HR, R= 0.49 HR
SNYDER TP= 0.40 HR, CP= 0.48

UNIT HYDROGRAPH
35 END-OF-PERIOD ORDINATES

12.	46.	113.	180.	199.	191.	178.	163.	144.	122.
103.	87.	73.	62.	52.	44.	37.	31.	26.	22.
19.	16.	13.	11.	10.	8.	7.	6.	5.	4.
3.	3.	2.	2.	2.					

*** *** *** *** ***

HYDROGRAPH AT STATION ER59B

TOTAL RAINFALL = 3.92, TOTAL LOSS = 0.82, TOTAL EXCESS = 3.11

PEAK FLOW	TIME		MAXIMUM AVERAGE FLOW			
			6-HR	24-HR	72-HR	24.92-HR
+ (CFS)	(HR)					
		(CFS)				
+ 274.	12.25		64.	21.	21.	21.
		(INCHES)	2.281	3.083	3.089	3.089
		(AC-FT)	32.	43.	43.	43.

CUMULATIVE AREA = 0.26 SQ MI

*** ***

531 KK — ER59R

DIVERT RETENTION VOLUME

DT	DIVERSION ISTAD	RET59	DIVERSION HYDROGRAPH IDENTIFICATION
	DSTRMX	23.20	MAXIMUM VOLUME TO BE DIVERTED
DI	INFLOW	0.00	1000.00 10000.00
DQ	DIVERTED FLOW	0.00	1000.00 10000.00

***

*** *** *** *** ***

DIVERSION HYDROGRAPH RET59

PEAK FLOW	TIME		MAXIMUM AVERAGE FLOW			
			6-HR	24-HR	72-HR	24.92-HR
+ (CFS)	(HR)					
		(CFS)				
+ 274.	12.25		41.	12.	11.	11.
		(INCHES)	1.460	1.680	1.680	1.680
		(AC-FT)	20.	23.	23.	23.

CUMULATIVE AREA = 0.26 SQ MI

*** *** *** *** ***

HYDROGRAPH AT STATION ER59R

PEAK FLOW	TIME		MAXIMUM AVERAGE FLOW			
			6-HR	24-HR	72-HR	24.92-HR
+ (CFS)	(HR)					
		(CFS)				
+ 194.	12.67		33.	10.	9.	9.
		(INCHES)	1.184	1.409	1.409	1.409
		(AC-FT)	16.	19.	19.	19.

CUMULATIVE AREA = 0.26 SQ MI

*** ***

536 KK — CER59B

COMBINE ROUTED FLOW FROM CP CRE55B TO RUNOFF FROM SUBBASIN ER59B

538 HC HYDROGRAPH COMBINATION
ICOMP 2 NUMBER OF HYDROGRAPHS TO COMBINE

***

MANE2 NPLAN,NSTM 1 0

*** *** *** *** ***

HYDROGRAPH AT STATION CER59B

PEAK FLOW	TIME		MAXIMUM AVERAGE FLOW			
			6-HR	24-HR	72-HR	24.92-HR
+ (CFS)	(HR)					
		(CFS)				
+ 194.	12.67		46.	14.	13.	13.
		(INCHES)	0.826	0.987	0.987	0.987
		(AC-FT)	23.	27.	27.	27.

CUMULATIVE AREA = 0.51 SQ MI

*** ***

539 KK — RIR63B

ROUTE FLOW FROM COMPUTATION POINT CER59B TO COMPUTATION POINT CIR63B.
CP CIR63B IS LOCATED ON THE WESTERN EDGE OF THE STUDY AREA WHICH IS BOUNDED BY A CONCRETE IRRIGATION CANAL AND EARTHEN ROADWAY. THE IRRIGATION CANAL IS OVERTOPPED AND FLOW CONTINUES ITS NATURAL FLOW PATH TO THE WEST. THE FLOW IS APPROXIMATELY 45 CFS SOUTH TO MARICOPA DRAIN.

DT	DIVERSION ISTAD	DIR63B	DIVERSION HYDROGRAPH IDENTIFICATION				
DI	INFLOW	0.00	45.00	100.00	200.00	400.00	600.00	800.00
DQ	DIVERTED FLOW	0.00	0.00	55.00	155.00	355.00	555.00	755.00

***

*** *** *** *** ***

DIVERSION HYDROGRAPH DIR63B

PEAK FLOW	TIME		MAXIMUM AVERAGE FLOW			
			6-HR	24-HR	72-HR	24.92-HR
+ (CFS)	(HR)					
		(CFS)				
+ 149.	12.67		18.	4.	4.	4.
		(INCHES)	0.322	0.322	0.322	0.322
		(AC-FT)	9.	9.	9.	9.

CUMULATIVE AREA = 0.51 SQ MI

*** *** *** *** ***

HYDROGRAPH AT STATION RIR63B

PEAK FLOW	TIME		MAXIMUM AVERAGE FLOW			
			6-HR	24-HR	72-HR	24.92-HR
+ (CFS)	(HR)					
		(CFS)				
+ 45.	12.58		28.	9.	9.	9.
		(INCHES)	0.503	0.665	0.665	0.665
		(AC-FT)	14.	18.	18.	18.

CUMULATIVE AREA = 0.51 SQ MI

*** ***

548 KK — IR63B

SUB-BASIN IR63B
24-HOUR SCS TYPE II RAINFALL WAS USED TO FIND TC & R FOR THIS BASIN
THIS BASIN USED RAINFALL REDUCTION FACTOR OF .934
L = .82 Kb = .034 Adj. Slope = 11.0

SUBBASIN RUNOFF DATA

553 BA SUBBASIN CHARACTERISTICS
TAREA 0.12 SUBBASIN AREA

PRECIPITATION DATA

32 PB STORM 3.92 BASIN TOTAL PRECIPITATION

32 PI INCREMENTAL PRECIPITATION PATTERN

0.00	0.00	0.00	0.00	0.00	0.00	0.00	0.00	0.00	0.00
0.00	0.00	0.00	0.00	0.00	0.00	0.00	0.00	0.00	0.00
0.00	0.00	0.00	0.00	0.00	0.00	0.00	0.00	0.00	0.00
0.00	0.00	0.00	0.00	0.00	0.00	0.00	0.00	0.00	0.00
0.00	0.00	0.00	0.00	0.00	0.00	0.00	0.00	0.00	0.00
0.00	0.00	0.00	0.00	0.00	0.00	0.00	0.00	0.00	0.00
0.00	0.00	0.00	0.00	0.00	0.00	0.00	0.00	0.00	0.00
0.00	0.00	0.00	0.00	0.00	0.00	0.00	0.00	0.00	0.00
0.00	0.00	0.00	0.00	0.00	0.00	0.00	0.00	0.00	0.00
0.00	0.00	0.00	0.00	0.00	0.00	0.00	0.00	0.00	0.00
0.00	0.00	0.00	0.00	0.00	0.00	0.00	0.00	0.00	0.00
0.00	0.00	0.00	0.00	0.00	0.00	0.00	0.00	0.00	0.00
0.00	0.00	0.00	0.00	0.00	0.00	0.00	0.00	0.00	0.00
0.00	0.00	0.00	0.00	0.00	0.00	0.00	0.00	0.00	0.00
0.00	0.00	0.00	0.00	0.00	0.00	0.00	0.00	0.00	0.00
0.00	0.00	0.00	0.00	0.00	0.00	0.00	0.01	0.00	0.01

```
          0.01      0.01      0.01      0.01      0.01      0.01      0.01      0.01      0.03      0.03
          0.03      0.09      0.09      0.09      0.01      0.01      0.01      0.01      0.01      0.01
          0.01      0.01      0.01      0.01      0.01      0.01      0.00      0.00      0.00      0.00
          0.00      0.00      0.00      0.00      0.00      0.00      0.00      0.00      0.00      0.00
          0.00      0.00      0.00      0.00      0.00      0.00      0.00      0.00      0.00      0.00
          0.00      0.00      0.00      0.00      0.00      0.00      0.00      0.00      0.00      0.00
          0.00      0.00      0.00      0.00      0.00      0.00      0.00      0.00      0.00      0.00
          0.00      0.00      0.00      0.00      0.00      0.00      0.00      0.00      0.00      0.00
          0.00      0.00      0.00      0.00      0.00      0.00      0.00      0.00      0.00      0.00
          0.00      0.00      0.00      0.00      0.00      0.00      0.00      0.00      0.00      0.00
          0.00      0.00      0.00      0.00      0.00      0.00      0.00      0.00      0.00      0.00
          0.00      0.00      0.00      0.00      0.00      0.00      0.00      0.00      0.00      0.00
          0.00      0.00      0.00      0.00      0.00      0.00      0.00      0.00      0.00      0.00
          0.00      0.00      0.00      0.00      0.00      0.00      0.00      0.00      0.00      0.00
          0.00      0.00      0.00      0.00      0.00      0.00      0.00      0.00      0.00      0.00
          0.00      0.00      0.00      0.00      0.00      0.00      0.00      0.00

554 LG    GREEN AND AMPT LOSS RATE
               STRTL       0.13  STARTING LOSS
                 DTH       0.25  MOISTURE DEFICIT
                PSIF       4.80  WETTING FRONT SUCTION
               XKSAT       0.40  HYDRAULIC CONDUCTIVITY
               RTIMP      71.00  PERCENT IMPERVIOUS AREA

555 UC    CLARK UNITGRAPH
                  TC       0.57  TIME OF CONCENTRATION
                   R       0.56  STORAGE COEFFICIENT

556 UA    ACCUMULATED-AREA VS. TIME,  11 ORDINATES
               0.0       5.0      16.0      30.0      65.0      77.0      84.0      90.0      94.0      97.0
             100.0

                                        ***

                                UNIT HYDROGRAPH PARAMETERS
                             CLARK   TC=  0.57 HR,       R=  0.56 HR
                            SNYDER   TP=  0.36 HR,      CP=  0.41

                                  UNIT HYDROGRAPH
                              39 END-OF-PERIOD ORDINATES
              7.       25.       61.       88.       90.       87.       81.       72.       62.       54.
             46.       40.       34.       30.       25.       22.       19.       16.       14.       12.
             10.        9.        8.        7.        6.        5.        4.        4.        3.        3.
              2.        2.        2.        2.        1.        1.        1.        1.        1.

   ***            ***            ***            ***            ***

                              HYDROGRAPH AT STATION    IR63B

     TOTAL RAINFALL =    3.92, TOTAL LOSS =    0.82, TOTAL EXCESS =    3.10

  PEAK FLOW     TIME                          MAXIMUM AVERAGE FLOW
                                      6-HR       24-HR       72-HR     24.92-HR
+   (CFS)        (HR)
                 (CFS)
+      127.     12.25                30.         10.         10.         10.
                (INCHES)           2.274       3.075       3.082       3.082
                (AC-FT)             15.         20.         20.         20.

                CUMULATIVE AREA =    0.12 SQ MI


*** *** *** *** *** *** *** *** *** *** *** *** *** *** *** *** *** *** *** *** *** *** *** *** *** *** *** *** *** *** *** *** *** *** ***


          **************
          *            *
558 KK    *      IR63  *
          *            *
          **************
                        DIVERT RETENTION VOLUME

     DT          DIVERSION
                      ISTAD       RET63  DIVERSION HYDROGRAPH IDENTIFICATION
                     DSTRMX       11.20  MAXIMUM VOLUME TO BE DIVERTED

     DI             INFLOW        0.00   1000.00  10000.00

     DQ       DIVERTED FLOW       0.00   1000.00  10000.00

                                                        ***

   ***            ***            ***            ***            ***

                              DIVERSION HYDROGRAPH    RET63

  PEAK FLOW     TIME                          MAXIMUM AVERAGE FLOW
                                      6-HR       24-HR       72-HR     24.92-HR
+   (CFS)        (HR)
                 (CFS)
+      127.     12.25                20.          6.          5.          5.
                (INCHES)           1.471       1.694       1.694       1.694
                (AC-FT)             10.         11.         11.         11.

                CUMULATIVE AREA =    0.12 SQ MI

   ***            ***            ***            ***            ***

                              HYDROGRAPH AT STATION     IR63

  PEAK FLOW     TIME                          MAXIMUM AVERAGE FLOW
                                      6-HR       24-HR       72-HR     24.92-HR
+   (CFS)        (HR)
                 (CFS)
+      79.      12.75                16.          5.          4.          4.
                (INCHES)           1.166       1.388       1.388       1.388
                (AC-FT)             8.          9.          9.          9.

                CUMULATIVE AREA =    0.12 SQ MI


*** *** *** *** *** *** *** *** *** *** *** *** *** *** *** *** *** *** *** *** *** *** *** *** *** *** *** *** *** *** *** *** *** *** ***


          **************
          *            *
563 KK    *    CIR63C  *
          *            *
          **************
                        COMBINE RETRIEVED ROUTED FLOW FROM CER59B TO RUNOFF FROM SUB-BASIN
                        IR65C

566 HC         HYDROGRAPH COMBINATION
                    ICOMP           2  NUMBER OF HYDROGRAPHS TO COMBINE

                                                        ***
MANE2 NPLAN,NSTM       1      0

   ***            ***            ***            ***            ***

                              HYDROGRAPH AT STATION   CIR63C

  PEAK FLOW     TIME                          MAXIMUM AVERAGE FLOW
                                      6-HR       24-HR       72-HR     24.92-HR
+   (CFS)        (HR)
                 (CFS)
+      124.     12.75                43.         14.         13.         13.
                (INCHES)           0.631       0.805       0.805       0.805
                (AC-FT)             22.         27.         27.         27.

                CUMULATIVE AREA =    0.64 SQ MI


*** *** *** *** *** *** *** *** *** *** *** *** *** *** *** *** *** *** *** *** *** *** *** *** *** *** *** *** *** *** *** *** *** *** ***


          **************
          *            *
567 KK    *    RIR65C  *
          *            *
          **************
                        ROUTE RETRIEVED FLOW FROM SUB-BASIN IR63B TO COMPUTATION POINT CIR65C
                       CROSS-SECTION REVISED TO REFLECT URBANIZED CONDITIONS

          HYDROGRAPH ROUTING DATA

570 RS         STORAGE ROUTING
                    NSTPS           7  NUMBER OF SUBREACHES
                     ITYP        ELEV  TYPE OF INITIAL CONDITION
                   RSVRIC       -1.00  INITIAL CONDITION
                        X        0.00 WORKING R AND D COEFFICIENT

571 RC         NORMAL DEPTH CHANNEL
                      ANL       0.030  LEFT OVERBANK N-VALUE
                     ANCH       0.030  MAIN CHANNEL N-VALUE
                      ANR       0.030  RIGHT OVERBANK N-VALUE
                    RLNTH       3300.  REACH LENGTH
                      SEL      0.0010  ENERGY SLOPE
                    ELMAX         0.0  MAX. ELEV. FOR STORAGE/OUTFLOW CALCULATION

                                CROSS-SECTION DATA
                        --- LEFT OVERBANK --- + ------ MAIN CHANNEL ------- + --- RIGHT OVERBANK ---
573 RY       ELEVATION      6.00      5.00      4.00      1.00      1.00      4.00      5.00      6.00
572 RX       DISTANCE       0.00      1.00     11.00     21.00     26.00     31.00     41.00     46.00

                                                ***

                              COMPUTED STORAGE-OUTFLOW-ELEVATION DATA

          STORAGE       0.00      0.11      0.25      0.42      0.61      0.83      1.07      1.34      1.64      1.96
          OUTFLOW       0.00      0.88      2.94      6.10     10.42     15.95     22.80     31.04     40.75     52.03
        ELEVATION       1.00      1.26      1.53      1.79      2.05      2.32      2.58      2.84      3.11      3.37
```

STORAGE	2.31	2.68	3.10	3.61	4.23	4.96	5.76	6.60	7.47	8.37
OUTFLOW	64.95	79.59	98.42	121.45	147.94	178.47	214.38	254.83	299.46	348.23
ELEVATION	3.63	3.89	4.16	4.42	4.68	4.95	5.21	5.47	5.74	6.00

*** WARNING *** MODIFIED PULS ROUTING MAY BE NUMERICALLY UNSTABLE FOR OUTFLOWS BETWEEN 80. TO 348.
THE ROUTED HYDROGRAPH SHOULD BE EXAMINED FOR OSCILLATIONS OR OUTFLOWS GREATER THAN PEAK INFLOWS.
THIS CAN BE CORRECTED BY DECREASING THE TIME INTERVAL OR INCREASING STORAGE (USE A LONGER REACH.)

*** *** *** *** ***

HYDROGRAPH AT STATION RIR65C

PEAK FLOW	TIME		MAXIMUM AVERAGE FLOW			
			6-HR	24-HR	72-HR	24.92-HR
+ (CFS)	(HR)					
		(CFS)				
+ 112.	13.08		43.	14.	13.	13.
		(INCHES)	0.619	0.793	0.793	0.793
		(AC-FT)	21.	27.	27.	27.

PEAK STORAGE	TIME	MAXIMUM AVERAGE STORAGE			
		6-HR	24-HR	72-HR	24.92-HR
+ (AC-FT)	(HR)				
0.	13.08	0.	0.	0.	0.

PEAK STAGE	TIME	MAXIMUM AVERAGE STAGE			
		6-HR	24-HR	72-HR	24.92-HR
+ (FEET)	(HR)				
4.31	13.08	3.03	1.79	1.76	1.76

CUMULATIVE AREA = 0.64 SQ MI

*** ***

```
              **************
              *            *
574 KK        *   IR65C    *
              *            *
              **************
```

SUB-BASIN IR65C
24-HOUR SCS TYPE II RAINFALL WAS USED TO FIND TC & R FOR THIS BASIN
THIS BASIN USED RAINFALL REDUCTION FACTOR OF .934
L = .84 Kb = .052 Adj. Slope = 13.0

SUBBASIN RUNOFF DATA

579 BA SUBBASIN CHARACTERISTICS
TAREA 0.17 SUBBASIN AREA

PRECIPITATION DATA

32 PB STORM 3.92 BASIN TOTAL PRECIPITATION

32 PI INCREMENTAL PRECIPITATION PATTERN

0.00	0.00	0.00	0.00	0.00	0.00	0.00	0.00	0.00	0.00
0.00	0.00	0.00	0.00	0.00	0.00	0.00	0.00	0.00	0.00
0.00	0.00	0.00	0.00	0.00	0.00	0.00	0.00	0.00	0.00
0.00	0.00	0.00	0.00	0.00	0.00	0.00	0.00	0.00	0.00
0.00	0.00	0.00	0.00	0.00	0.00	0.00	0.00	0.00	0.00
0.00	0.00	0.00	0.00	0.00	0.00	0.00	0.00	0.00	0.00
0.00	0.00	0.00	0.00	0.00	0.00	0.00	0.00	0.00	0.00
0.00	0.00	0.00	0.00	0.00	0.00	0.00	0.00	0.00	0.00
0.00	0.00	0.00	0.00	0.00	0.00	0.00	0.00	0.00	0.00
0.00	0.00	0.00	0.00	0.00	0.00	0.00	0.00	0.00	0.00
0.00	0.00	0.00	0.00	0.00	0.00	0.00	0.00	0.00	0.00
0.00	0.00	0.00	0.00	0.00	0.00	0.00	0.00	0.00	0.00
0.00	0.00	0.00	0.00	0.00	0.00	0.00	0.01	0.00	0.01
0.01	0.01	0.01	0.01	0.01	0.01	0.01	0.01	0.03	0.03
0.03	0.09	0.09	0.09	0.01	0.01	0.01	0.01	0.01	0.01
0.01	0.01	0.01	0.01	0.01	0.01	0.00	0.00	0.00	0.00
0.00	0.00	0.00	0.00	0.00	0.00	0.00	0.00	0.00	0.00
0.00	0.00	0.00	0.00	0.00	0.00	0.00	0.00	0.00	0.00
0.00	0.00	0.00	0.00	0.00	0.00	0.00	0.00	0.00	0.00
0.00	0.00	0.00	0.00	0.00	0.00	0.00	0.00	0.00	0.00
0.00	0.00	0.00	0.00	0.00	0.00	0.00	0.00	0.00	0.00
0.00	0.00	0.00	0.00	0.00	0.00	0.00	0.00	0.00	0.00
0.00	0.00	0.00	0.00	0.00	0.00	0.00	0.00	0.00	0.00
0.00	0.00	0.00	0.00	0.00	0.00	0.00	0.00	0.00	0.00
0.00	0.00	0.00	0.00	0.00	0.00	0.00	0.00	0.00	0.00
0.00	0.00	0.00	0.00	0.00	0.00	0.00	0.00	0.00	0.00
0.00	0.00	0.00	0.00	0.00	0.00	0.00	0.00	0.00	0.00
0.00	0.00	0.00	0.00	0.00	0.00	0.00	0.00	0.00	0.00
0.00	0.00	0.00	0.00	0.00	0.00	0.00	0.00		

580 LG GREEN AND AMPT LOSS RATE

STRTL	0.28	STARTING LOSS
DTH	0.25	MOISTURE DEFICIT
PSIF	4.80	WETTING FRONT SUCTION
XKSAT	0.36	HYDRAULIC CONDUCTIVITY
RTIMP	21.00	PERCENT IMPERVIOUS AREA

581 UC CLARK UNITGRAPH
TC 0.83 TIME OF CONCENTRATION
R 0.72 STORAGE COEFFICIENT

582 UA ACCUMULATED-AREA VS. TIME, 11 ORDINATES

0.0	5.0	16.0	30.0	65.0	77.0	84.0	90.0	94.0	97.0
100.0									

***

UNIT HYDROGRAPH PARAMETERS
CLARK TC= 0.83 HR, R= 0.72 HR
SNYDER TP= 0.49 HR, CP= 0.42

UNIT HYDROGRAPH
50 END-OF-PERIOD ORDINATES

4.	15.	32.	64.	90.	94.	93.	90.	85.	80.
73.	65.	58.	52.	46.	41.	37.	33.	29.	26.
23.	20.	18.	16.	14.	13.	11.	10.	9.	8.
7.	6.	6.	5.	5.	4.	4.	3.	3.	3.
2.	2.	2.	2.	1.	1.	1.	1.	1.	1.

*** *** *** *** ***

HYDROGRAPH AT STATION IR65C

TOTAL RAINFALL = 3.92, TOTAL LOSS = 2.23, TOTAL EXCESS = 1.69

PEAK FLOW	TIME		MAXIMUM AVERAGE FLOW			
			6-HR	24-HR	72-HR	24.92-HR
+ (CFS)	(HR)					
		(CFS)				
+ 112.	12.33		26.	8.	7.	7.
		(INCHES)	1.443	1.681	1.682	1.682
		(AC-FT)	13.	15.	15.	15.

CUMULATIVE AREA = 0.17 SQ MI

*** ***

```
              **************
              *            *
584 KK        *   IR65R    *
              *            *
              **************
```

DIVERT RETENTION VOLUME

DT DIVERSION
ISTAD RET65C DIVERSION HYDROGRAPH IDENTIFICATION
DSTRMX 14.40 MAXIMUM VOLUME TO BE DIVERTED

DI	INFLOW	0.00	1000.00	10000.00
DQ	DIVERTED FLOW	0.00	1000.00	10000.00

***

*** *** *** *** ***

DIVERSION HYDROGRAPH RET65C

PEAK FLOW	TIME		MAXIMUM AVERAGE FLOW			
			6-HR	24-HR	72-HR	24.92-HR
+ (CFS)	(HR)					
		(CFS)				
+ 112.	12.33		26.	7.	7.	7.
		(INCHES)	1.443	1.588	1.588	1.588
		(AC-FT)	13.	14.	14.	14.

CUMULATIVE AREA = 0.17 SQ MI

*** *** *** *** ***

HYDROGRAPH AT STATION IR65R

PEAK FLOW	TIME		MAXIMUM AVERAGE FLOW			
			6-HR	24-HR	72-HR	24.92-HR
+ (CFS)	(HR)					
		(CFS)				
+ 2.	17.17		1.	0.	0.	0.
		(INCHES)	0.078	0.094	0.094	0.094
		(AC-FT)	1.	1.	1.	1.

CUMULATIVE AREA = 0.17 SQ MI

*** ***

```
589 KK      **************
            *            *
            *    CIR65C  *
            *            *
            **************
                        COMBINE RETRIEVED ROUTED FLOW FROM SUB-BASIN IR63B TO RUNOFF FROM SUB-BASIN
                        IR65C

592 HC              HYDROGRAPH COMBINATION
                        ICOMP           2  NUMBER OF HYDROGRAPHS TO COMBINE

                                                                    ***
MANE2 NPLAN,NSTM        1       0

        ***             ***             ***             ***             ***

                            HYDROGRAPH AT STATION   CIR65C

  PEAK FLOW     TIME                          MAXIMUM AVERAGE FLOW
                                      6-HR        24-HR       72-HR      24.92-HR
+   (CFS)       (HR)
                    (CFS)
+     112.      13.08                43.          14.         14.          14.
                (INCHES)          0.495         0.646       0.646        0.646
                 (AC-FT)           21.           28.         28.          28.

                            CUMULATIVE AREA =    0.81 SQ MI


*** *** *** *** *** *** *** *** *** *** *** *** *** *** *** *** *** *** *** *** *** *** *** *** *** *** *** *** *** *** *** *** *** *** *** ***


            **************
            *            *
593 KK      *     RIRDC  *
            *            *
            **************
                        ROUTE FLOW FROM COMPUTATION POINT CIR65C TO COMPUTATION POINT CIRDC
                        CROSS-SECTION REVISED TO REFLECT URBANIZED CONDITIONS

                    HYDROGRAPH ROUTING DATA

596 RS              STORAGE ROUTING
                        NSTPS           2  NUMBER OF SUBREACHES
                         ITYP        ELEV  TYPE OF INITIAL CONDITION
                       RSVRIC       -1.00  INITIAL CONDITION
                            X        0.00 WORKING R AND D COEFFICIENT

597 RC              NORMAL DEPTH CHANNEL
                          ANL       0.030  LEFT OVERBANK N-VALUE
                         ANCH       0.030  MAIN CHANNEL N-VALUE
                          ANR       0.030  RIGHT OVERBANK N-VALUE
                        RLNTH        3200.  REACH LENGTH
                          SEL      0.0018  ENERGY SLOPE
                        ELMAX         0.0  MAX. ELEV. FOR STORAGE/OUTFLOW CALCULATION

                                CROSS-SECTION DATA
                          --- LEFT OVERBANK --- + ------ MAIN CHANNEL ------- + --- RIGHT OVERBANK ---
599 RY      ELEVATION   1014.50   1014.00   1013.00   1010.00   1010.00   1013.00   1014.00   1014.50
598 RX      DISTANCE       0.00      1.00     10.00     20.00     30.00     40.00     50.00     51.00

                                                ***

                            COMPUTED STORAGE-OUTFLOW-ELEVATION DATA

          STORAGE        0.00      0.19      0.40      0.65      0.92      1.21      1.54      1.89      2.27      2.68
          OUTFLOW        0.00      1.96      6.40     12.99     21.70     32.57     45.66     61.07     78.89     99.22
        ELEVATION     1010.00   1010.24   1010.47   1010.71   1010.95   1011.18   1011.42   1011.66   1011.89   1012.13

          STORAGE        3.11      3.58      4.07      4.59      5.17      5.84      6.58      7.40      8.27      9.14
          OUTFLOW      122.16    147.80    176.25    209.94    251.86    298.14    349.35    406.14    469.84    538.84
        ELEVATION     1012.37   1012.60   1012.84   1013.08   1013.32   1013.55   1013.79   1014.03   1014.26   1014.50

    ***             ***             ***             ***             ***

                            HYDROGRAPH AT STATION    RIRDC

  PEAK FLOW     TIME                          MAXIMUM AVERAGE FLOW
                                      6-HR        24-HR       72-HR      24.92-HR
+   (CFS)       (HR)
                    (CFS)
+      92.      13.58                42.          14.         13.          13.
                (INCHES)          0.484         0.634       0.634        0.634
                 (AC-FT)           21.           27.         27.          27.

 PEAK STORAGE   TIME                          MAXIMUM AVERAGE STORAGE
                                      6-HR        24-HR       72-HR      24.92-HR
+  (AC-FT)      (HR)
         1.     13.58                 1.           0.          0.           0.

  PEAK STAGE    TIME                          MAXIMUM AVERAGE STAGE
                                      6-HR        24-HR       72-HR      24.92-HR
+   (FEET)      (HR)
    1012.05     13.58             1011.30      1010.50     1010.48      1010.48

                            CUMULATIVE AREA =    0.81 SQ MI


*** *** *** *** *** *** *** *** *** *** *** *** *** *** *** *** *** *** *** *** *** *** *** *** *** *** *** *** *** *** *** *** *** *** *** ***


            **************
            *            *
600 KK      *    DIIRDC  *
            *            *
            **************
                        ROUTED FLOW FROM COMPUTATION POINT CIR65C IS SPLIT AT COMPUTATION POINT
                        CIRDC

    DT          DIVERSION
                      ISTAD      RIR65C  DIVERSION HYDROGRAPH IDENTIFICATION

    DI             INFLOW        0.00     16.00     34.00     51.00     71.00     80.00    100.00    120.00    150.00

    DQ       DIVERTED FLOW       0.00     16.00     25.00     32.00     40.00     49.00     69.00     89.00    119.00

                                                ***

     ***             ***             ***             ***             ***

                        DIVERSION HYDROGRAPH    RIR65C

  PEAK FLOW     TIME                          MAXIMUM AVERAGE FLOW
                                      6-HR        24-HR       72-HR      24.92-HR
+   (CFS)       (HR)
                    (CFS)
+      61.      13.58                29.          10.         10.          10.
                (INCHES)          0.332         0.482       0.482        0.482
                 (AC-FT)           14.           21.         21.          21.

                            CUMULATIVE AREA =    0.81 SQ MI

     ***             ***             ***             ***             ***

                            HYDROGRAPH AT STATION    DIIRDC

  PEAK FLOW     TIME                          MAXIMUM AVERAGE FLOW
                                      6-HR        24-HR       72-HR      24.92-HR
+   (CFS)       (HR)
                    (CFS)
+      31.      13.33                13.          3.          3.           3.
                (INCHES)          0.151         0.152       0.152        0.152
                 (AC-FT)            7.            7.          7.           7.

                            CUMULATIVE AREA =    0.81 SQ MI


*** *** *** *** *** *** *** *** *** *** *** *** *** *** *** *** *** *** *** *** *** *** *** *** *** *** *** *** *** *** *** *** *** *** *** ***


            **************
            *            *
606 KK      *      IRDC  *
            *            *
            **************
                        SUB-BASIN IRDC
                        24-HOUR SCS TYPE II RAINFALL WAS USED TO FIND TC & R FOR THIS BASIN
                        THIS BASIN USED RAINFALL REDUCTION FACTOR OF  .934
                          L = 1.47  Kb = .038  Adj. Slope =   12.0

                    SUBBASIN RUNOFF DATA

611 BA              SUBBASIN CHARACTERISTICS
                         TAREA        0.52  SUBBASIN AREA

                    PRECIPITATION DATA

 32 PB                   STORM        3.92  BASIN TOTAL PRECIPITATION

 32 PI              INCREMENTAL PRECIPITATION PATTERN
                      0.00      0.00      0.00      0.00      0.00      0.00      0.00      0.00      0.00      0.00
                      0.00      0.00      0.00      0.00      0.00      0.00      0.00      0.00      0.00      0.00
                      0.00      0.00      0.00      0.00      0.00      0.00      0.00      0.00      0.00      0.00
                      0.00      0.00      0.00      0.00      0.00      0.00      0.00      0.00      0.00      0.00
                      0.00      0.00      0.00      0.00      0.00      0.00      0.00      0.00      0.00      0.00
                      0.00      0.00      0.00      0.00      0.00      0.00      0.00      0.00      0.00      0.00
                      0.00      0.00      0.00      0.00      0.00      0.00      0.00      0.00      0.00      0.00
                      0.00      0.00      0.00      0.00      0.00      0.00      0.00      0.00      0.00      0.00
                      0.00      0.00      0.00      0.00      0.00      0.00      0.00      0.00      0.00      0.00
                      0.00      0.00      0.00      0.00      0.00      0.00      0.00      0.00      0.00      0.00
```

```
     0.00      0.00      0.00      0.00      0.00      0.00      0.00      0.00      0.00      0.00
     0.00      0.00      0.00      0.00      0.00      0.00      0.00      0.00      0.00      0.00
     0.00      0.00      0.00      0.00      0.00      0.00      0.00      0.01      0.00      0.01
     0.01      0.01      0.01      0.01      0.01      0.01      0.01      0.01      0.03      0.03
     0.03      0.09      0.09      0.09      0.01      0.01      0.01      0.01      0.01      0.01
     0.01      0.01      0.01      0.01      0.01      0.01      0.00      0.00      0.00      0.00
     0.00      0.00      0.00      0.00      0.00      0.00      0.00      0.00      0.00      0.00
     0.00      0.00      0.00      0.00      0.00      0.00      0.00      0.00      0.00      0.00
     0.00      0.00      0.00      0.00      0.00      0.00      0.00      0.00      0.00      0.00
     0.00      0.00      0.00      0.00      0.00      0.00      0.00      0.00      0.00      0.00
     0.00      0.00      0.00      0.00      0.00      0.00      0.00      0.00      0.00      0.00
     0.00      0.00      0.00      0.00      0.00      0.00      0.00      0.00      0.00      0.00
     0.00      0.00      0.00      0.00      0.00      0.00      0.00      0.00      0.00      0.00
     0.00      0.00      0.00      0.00      0.00      0.00      0.00      0.00      0.00      0.00
     0.00      0.00      0.00      0.00      0.00      0.00      0.00      0.00      0.00      0.00
     0.00      0.00      0.00      0.00      0.00      0.00      0.00      0.00      0.00      0.00
     0.00      0.00      0.00      0.00      0.00      0.00      0.00      0.00      0.00      0.00
     0.00      0.00      0.00      0.00      0.00      0.00      0.00      0.00      0.00      0.00
     0.00      0.00      0.00      0.00      0.00      0.00      0.00      0.00

612 LG        GREEN AND AMPT LOSS RATE
                    STRTL        0.19  STARTING LOSS
                      DTH        0.25  MOISTURE DEFICIT
                     PSIF        4.80  WETTING FRONT SUCTION
                    XKSAT        0.37  HYDRAULIC CONDUCTIVITY
                    RTIMP       51.00  PERCENT IMPERVIOUS AREA

613 UC        CLARK UNITGRAPH
                       TC        0.96  TIME OF CONCENTRATION
                        R        0.69  STORAGE COEFFICIENT

614 UA        ACCUMULATED-AREA VS. TIME,  11 ORDINATES
                  0.0       5.0      16.0      30.0      65.0      77.0      84.0      90.0      94.0      97.0
                100.0

                                                        ***

                                        UNIT HYDROGRAPH PARAMETERS
                                   CLARK   TC=  0.96 HR,        R=  0.69 HR
                                  SNYDER   TP=  0.53 HR,       CP=  0.44

                                             UNIT HYDROGRAPH
                                        49 END-OF-PERIOD ORDINATES
          10.       39.       81.      149.      235.      282.      285.      279.      267.      252.
         236.      218.      196.      174.      154.      137.      121.      108.       95.       85.
          75.       66.       59.       52.       46.       41.       36.       32.       29.       25.
          23.       20.       18.       16.       14.       12.       11.       10.        9.        8.
           7.        6.        5.        5.        4.        4.        3.        3.        3.

      ***            ***            ***            ***            ***

                    HYDROGRAPH AT STATION      IRDC

   TOTAL RAINFALL =     3.92, TOTAL LOSS =     1.38, TOTAL EXCESS =     2.54

  PEAK FLOW      TIME                           MAXIMUM AVERAGE FLOW
                                        6-HR        24-HR        72-HR     24.92-HR
+   (CFS)        (HR)
                           (CFS)
+     397.      12.42                   110.          36.          34.          34.
                         (INCHES)      1.943        2.520        2.524        2.524
                          (AC-FT)        54.          71.          71.          71.

                      CUMULATIVE AREA =     0.52 SQ MI

*** *** *** *** *** *** *** *** *** *** *** *** *** *** *** *** *** *** *** *** *** *** *** *** *** *** *** *** *** *** *** *** ***

              **************
              *            *
616 KK        *     IRDR   *
              *            *
              **************
                      DIVERT RETENTION VOLUME

 DT          DIVERSION
                    ISTAD       RETRDC  DIVERSION HYDROGRAPH IDENTIFICATION
                   DSTRMX        43.20  MAXIMUM VOLUME TO BE DIVERTED

 DI                INFLOW        0.00   1000.00  10000.00

 DQ          DIVERTED FLOW       0.00   1000.00  10000.00

                                                        ***

      ***            ***            ***            ***            ***

                    DIVERSION HYDROGRAPH    RETRDC

  PEAK FLOW      TIME                           MAXIMUM AVERAGE FLOW
                                        6-HR        24-HR        72-HR     24.92-HR
+   (CFS)        (HR)
```

```
                           (CFS)
+     397.      12.42                    78.          22.          21.          21.
                         (INCHES)      1.377        1.543        1.543        1.543
                          (AC-FT)        39.          43.          43.          43.

                      CUMULATIVE AREA =     0.52 SQ MI

      ***            ***            ***            ***            ***

                    HYDROGRAPH AT STATION      IRDR

  PEAK FLOW      TIME                           MAXIMUM AVERAGE FLOW
                                        6-HR        24-HR        72-HR     24.92-HR
+   (CFS)        (HR)
                           (CFS)
+     225.      13.17                    47.          14.          13.          13.
                         (INCHES)      0.829        0.981        0.981        0.981
                          (AC-FT)        23.          27.          27.          27.

                      CUMULATIVE AREA =     0.52 SQ MI

*** *** *** *** *** *** *** *** *** *** *** *** *** *** *** *** *** *** *** *** *** *** *** *** *** *** *** *** *** *** *** *** ***

              **************
              *            *
621 KK        *    CIRDC   *
              *            *
              **************

                        COMBINE ROUTED FLOW FROM COMPUTATION POINT CIR65C TO RUNOFF FROM SUB-BASIN
                        IRDC

624 HC           HYDROGRAPH COMBINATION
                       ICOMP            2  NUMBER OF HYDROGRAPHS TO COMBINE

                                                        ***

MANE2 NPLAN,NSTM        1       0

      ***            ***            ***            ***            ***

                    HYDROGRAPH AT STATION      CIRDC

  PEAK FLOW      TIME                           MAXIMUM AVERAGE FLOW
                                        6-HR        24-HR        72-HR     24.92-HR
+   (CFS)        (HR)
                           (CFS)
+     234.      13.17                    60.          17.          17.          17.
                         (INCHES)      0.418        0.478        0.478        0.478
                          (AC-FT)        30.          34.          34.          34.

                      CUMULATIVE AREA =     1.33 SQ MI

*** *** *** *** *** *** *** *** *** *** *** *** *** *** *** *** *** *** *** *** *** *** *** *** *** *** *** *** *** *** *** *** ***

              **************
              *            *
625 KK        *    RIRSMC  *
              *            *
              **************

                        ROUTE FLOW COMPUTATION POINT CIRDC TO COMPUTATION POINT CIRSMC
                      CROSS-SECTION REVISED TO REFLECT URBANIZED CONDITIONS

              HYDROGRAPH ROUTING DATA

628 RS           STORAGE ROUTING
                      NSTPS             3  NUMBER OF SUBREACHES
                       ITYP          ELEV  TYPE OF INITIAL CONDITION
                     RSVRIC         -1.00  INITIAL CONDITION
                          X          0.00  WORKING R AND D COEFFICIENT

629 RC           NORMAL DEPTH CHANNEL
                        ANL         0.035  LEFT OVERBANK N-VALUE
                       ANCH         0.035  MAIN CHANNEL N-VALUE
                        ANR         0.035  RIGHT OVERBANK N-VALUE
                      RLNTH         3400.  REACH LENGTH
                        SEL        0.0058  ENERGY SLOPE
                      ELMAX           0.0  MAX. ELEV. FOR STORAGE/OUTFLOW CALCULATION

                                       CROSS-SECTION DATA
                     --- LEFT OVERBANK --- + ------ MAIN CHANNEL ------- + --- RIGHT OVERBANK ---
631 RY     ELEVATION   1006.00   1005.00   1004.00    999.00    999.00   1004.00   1005.00   1006.00
630 RX      DISTANCE      0.00     40.00     60.00     70.00     80.00     90.00    110.00    150.00

                                                        ***

                                COMPUTED STORAGE-OUTFLOW-ELEVATION DATA
```

STORAGE	0.00	0.31	0.66	1.05	1.49	1.97	2.49	3.05	3.66	4.30
OUTFLOW	0.00	6.24	20.27	40.88	67.90	101.40	141.56	188.60	242.77	304.35
ELEVATION	999.00	999.37	999.74	1000.11	1000.47	1000.84	1001.21	1001.58	1001.95	1002.32
STORAGE	4.99	5.73	6.50	7.32	8.21	9.47	11.15	13.36	16.40	20.29
OUTFLOW	373.60	450.80	536.24	630.18	743.23	885.51	1052.57	1246.97	1488.88	1792.29
ELEVATION	1002.68	1003.05	1003.42	1003.79	1004.16	1004.53	1004.89	1005.26	1005.63	1006.00

*** WARNING *** MODIFIED PULS ROUTING MAY BE NUMERICALLY UNSTABLE FOR OUTFLOWS BETWEEN 304. TO 1053.
THE ROUTED HYDROGRAPH SHOULD BE EXAMINED FOR OSCILLATIONS OR OUTFLOWS GREATER THAN PEAK INFLOWS.
THIS CAN BE CORRECTED BY DECREASING THE TIME INTERVAL OR INCREASING STORAGE (USE A LONGER REACH.)

*** *** *** *** ***

HYDROGRAPH AT STATION RIRSMC

PEAK FLOW	TIME		MAXIMUM AVERAGE FLOW			
			6-HR	24-HR	72-HR	24.92-HR
+ (CFS)	(HR)					
		(CFS)				
+ 219.	13.42		59.	17.	16.	16.
		(INCHES)	0.413	0.475	0.475	0.475
		(AC-FT)	29.	34.	34.	34.

PEAK STORAGE	TIME	MAXIMUM AVERAGE STORAGE			
		6-HR	24-HR	72-HR	24.92-HR
+ (AC-FT)	(HR)				
1.	13.42	0.	0.	0.	0.

PEAK STAGE	TIME	MAXIMUM AVERAGE STAGE			
		6-HR	24-HR	72-HR	24.92-HR
+ (FEET)	(HR)				
1001.79	13.42	1000.22	999.41	999.40	999.40

CUMULATIVE AREA = 1.33 SQ MI

*** ***

```
              *************
              *           *
  632 KK      *   IRSMC   *
              *           *
              *************
```

SUB-BASIN IRSMC
24-HOUR SCS TYPE II RAINFALL WAS USED TO FIND TC & R FOR THIS BASIN
THIS BASIN USED RAINFALL REDUCTION FACTOR OF .934
L = .88 Kb = .043 Adj. Slope = 32.0

SUBBASIN RUNOFF DATA

637 BA SUBBASIN CHARACTERISTICS
TAREA 0.24 SUBBASIN AREA

PRECIPITATION DATA

32 PB STORM 3.92 BASIN TOTAL PRECIPITATION

32 PI INCREMENTAL PRECIPITATION PATTERN

0.00	0.00	0.00	0.00	0.00	0.00	0.00	0.00	0.00	0.00
0.00	0.00	0.00	0.00	0.00	0.00	0.00	0.00	0.00	0.00
0.00	0.00	0.00	0.00	0.00	0.00	0.00	0.00	0.00	0.00
0.00	0.00	0.00	0.00	0.00	0.00	0.00	0.00	0.00	0.00
0.00	0.00	0.00	0.00	0.00	0.00	0.00	0.00	0.00	0.00
0.00	0.00	0.00	0.00	0.00	0.00	0.00	0.00	0.00	0.00
0.00	0.00	0.00	0.00	0.00	0.00	0.00	0.00	0.00	0.00
0.00	0.00	0.00	0.00	0.00	0.00	0.00	0.00	0.00	0.00
0.00	0.00	0.00	0.00	0.00	0.00	0.00	0.00	0.00	0.00
0.00	0.00	0.00	0.00	0.00	0.00	0.00	0.00	0.00	0.00
0.00	0.00	0.00	0.00	0.00	0.00	0.00	0.00	0.00	0.00
0.00	0.00	0.00	0.00	0.00	0.00	0.00	0.00	0.00	0.00
0.00	0.00	0.00	0.00	0.00	0.00	0.00	0.01	0.00	0.01
0.01	0.01	0.01	0.01	0.01	0.01	0.01	0.01	0.03	0.03
0.03	0.09	0.09	0.09	0.01	0.01	0.01	0.01	0.01	0.01
0.01	0.01	0.01	0.01	0.01	0.01	0.00	0.00	0.00	0.00
0.00	0.00	0.00	0.00	0.00	0.00	0.00	0.00	0.00	0.00
0.00	0.00	0.00	0.00	0.00	0.00	0.00	0.00	0.00	0.00
0.00	0.00	0.00	0.00	0.00	0.00	0.00	0.00	0.00	0.00
0.00	0.00	0.00	0.00	0.00	0.00	0.00	0.00	0.00	0.00
0.00	0.00	0.00	0.00	0.00	0.00	0.00	0.00	0.00	0.00
0.00	0.00	0.00	0.00	0.00	0.00	0.00	0.00	0.00	0.00
0.00	0.00	0.00	0.00	0.00	0.00	0.00	0.00	0.00	0.00
0.00	0.00	0.00	0.00	0.00	0.00	0.00	0.00	0.00	0.00
0.00	0.00	0.00	0.00	0.00	0.00	0.00	0.00	0.00	0.00
0.00	0.00	0.00	0.00	0.00	0.00	0.00	0.00	0.00	0.00
0.00	0.00	0.00	0.00	0.00	0.00	0.00	0.00	0.00	0.00
0.00	0.00	0.00	0.00	0.00	0.00	0.00	0.00	0.00	0.00
0.00	0.00	0.00	0.00	0.00	0.00	0.00	0.00		

638 LG GREEN AND AMPT LOSS RATE
STRTL 0.21 STARTING LOSS
DTH 0.25 MOISTURE DEFICIT
PSIF 4.50 WETTING FRONT SUCTION
XKSAT 0.43 HYDRAULIC CONDUCTIVITY
RTIMP 34.00 PERCENT IMPERVIOUS AREA

639 UC CLARK UNITGRAPH
TC 0.48 TIME OF CONCENTRATION
R 0.33 STORAGE COEFFICIENT

640 UA ACCUMULATED-AREA VS. TIME, 11 ORDINATES

0.0	5.0	16.0	30.0	65.0	77.0	84.0	90.0	94.0	97.0
100.0									

***

UNIT HYDROGRAPH PARAMETERS
CLARK TC= 0.48 HR, R= 0.33 HR
SNYDER TP= 0.30 HR, CP= 0.53

UNIT HYDROGRAPH
24 END-OF-PERIOD ORDINATES

27.	119.	228.	267.	244.	211.	172.	134.	104.	81.
63.	49.	38.	29.	23.	18.	14.	11.	8.	6.
5.	4.	3.	2.						

*** *** *** *** ***

HYDROGRAPH AT STATION IRSMC

TOTAL RAINFALL = 3.92, TOTAL LOSS = 1.89, TOTAL EXCESS = 2.03

PEAK FLOW	TIME		MAXIMUM AVERAGE FLOW			
			6-HR	24-HR	72-HR	24.92-HR
+ (CFS)	(HR)					
		(CFS)				
+ 285.	12.17		42.	13.	13.	13.
		(INCHES)	1.636	2.020	2.023	2.023
		(AC-FT)	21.	26.	26.	26.

CUMULATIVE AREA = 0.24 SQ MI

*** ***

```
              *************
              *           *
  642 KK      *   IRSMR   *
              *           *
              *************
```

DIVERT RETENTION VOLUME
RELAXED RETENTION VOLUME FROM 20.0 AC-FT

DT DIVERSION
ISTAD RETSMC DIVERSION HYDROGRAPH IDENTIFICATION
DSTRMX 19.10 MAXIMUM VOLUME TO BE DIVERTED

DI INFLOW 0.00 1000.00 10000.00

DQ DIVERTED FLOW 0.00 1000.00 10000.00

***

*** *** *** *** ***

DIVERSION HYDROGRAPH RETSMC

PEAK FLOW	TIME		MAXIMUM AVERAGE FLOW			
			6-HR	24-HR	72-HR	24.92-HR
+ (CFS)	(HR)					
		(CFS)				
+ 285.	12.17		36.	10.	9.	9.
		(INCHES)	1.371	1.486	1.486	1.486
		(AC-FT)	18.	19.	19.	19.

CUMULATIVE AREA = 0.24 SQ MI

*** *** *** *** ***

HYDROGRAPH AT STATION IRSMR

PEAK FLOW	TIME		MAXIMUM AVERAGE FLOW			
			6-HR	24-HR	72-HR	24.92-HR
+ (CFS)	(HR)					
		(CFS)				
+ 74.	12.83		11.	3.	3.	3.
		(INCHES)	0.437	0.537	0.537	0.537
		(AC-FT)	6.	7.	7.	7.

CUMULATIVE AREA = 0.24 SQ MI

*** ***

648 KK **CIRSMS**

650 HC HYDROGRAPH COMBINATION
ICOMP 2 NUMBER OF HYDROGRAPHS TO COMBINE

***

MANE2 NPLAN,NSTM 1 0

*** *** *** *** ***

HYDROGRAPH AT STATION CIRSMS

PEAK FLOW	TIME		MAXIMUM AVERAGE FLOW			
			6-HR	24-HR	72-HR	24.92-HR
+ (CFS)	(HR)					
		(CFS)				
+ 243.	13.42		69.	21.	20.	20.
		(INCHES)	0.410	0.484	0.484	0.484
		(AC-FT)	34.	41.	41.	41.

CUMULATIVE AREA = 1.58 SQ MI

*** ***

651 KK **CIRSMC**

COMBINE FLOWS IN MARICOPA DRAIN JUST WEST OF 75TH AVE

653 HC HYDROGRAPH COMBINATION
ICOMP 2 NUMBER OF HYDROGRAPHS TO COMBINE

***

MANE2 NPLAN,NSTM 1 0

*** *** *** *** ***

HYDROGRAPH AT STATION CIRSMC

PEAK FLOW	TIME		MAXIMUM AVERAGE FLOW			
			6-HR	24-HR	72-HR	24.92-HR
+ (CFS)	(HR)					
		(CFS)				
+ 872.	13.83		488.	157.	152.	152.
		(INCHES)	0.444	0.573	0.573	0.573
		(AC-FT)	242.	312.	312.	312.

CUMULATIVE AREA = 10.21 SQ MI

*** ***

654 KK **CD2C**

SUB-BASIN CD2C
24-HOUR SCS TYPE II RAINFALL WAS USED TO FIND TC & R FOR THIS BASIN
THIS BASIN USED RAINFALL REDUCTION FACTOR OF .934
L = 1.57 Kb = .043 Adj. Slope = 4.0

SUBBASIN RUNOFF DATA

659 BA SUBBASIN CHARACTERISTICS
TAREA 0.60 SUBBASIN AREA

PRECIPITATION DATA

32 PB STORM 3.92 BASIN TOTAL PRECIPITATION

32 PI INCREMENTAL PRECIPITATION PATTERN

0.00	0.00	0.00	0.00	0.00	0.00	0.00	0.00	0.00	0.00
0.00	0.00	0.00	0.00	0.00	0.00	0.00	0.00	0.00	0.00
0.00	0.00	0.00	0.00	0.00	0.00	0.00	0.00	0.00	0.00
0.00	0.00	0.00	0.00	0.00	0.00	0.00	0.00	0.00	0.00
0.00	0.00	0.00	0.00	0.00	0.00	0.00	0.00	0.00	0.00
0.00	0.00	0.00	0.00	0.00	0.00	0.00	0.00	0.00	0.00
0.00	0.00	0.00	0.00	0.00	0.00	0.00	0.00	0.00	0.00
0.00	0.00	0.00	0.00	0.00	0.00	0.00	0.00	0.00	0.00
0.00	0.00	0.00	0.00	0.00	0.00	0.00	0.00	0.00	0.00
0.00	0.00	0.00	0.00	0.00	0.00	0.00	0.00	0.00	0.00
0.00	0.00	0.00	0.00	0.00	0.00	0.00	0.00	0.00	0.00
0.00	0.00	0.00	0.00	0.00	0.00	0.00	0.00	0.00	0.00
0.00	0.00	0.00	0.00	0.00	0.00	0.00	0.01	0.00	0.01
0.01	0.01	0.01	0.01	0.01	0.01	0.01	0.01	0.03	0.03
0.03	0.09	0.09	0.09	0.01	0.01	0.01	0.01	0.01	0.01
0.01	0.01	0.01	0.01	0.01	0.01	0.00	0.00	0.00	0.00
0.00	0.00	0.00	0.00	0.00	0.00	0.00	0.00	0.00	0.00
0.00	0.00	0.00	0.00	0.00	0.00	0.00	0.00	0.00	0.00
0.00	0.00	0.00	0.00	0.00	0.00	0.00	0.00	0.00	0.00
0.00	0.00	0.00	0.00	0.00	0.00	0.00	0.00	0.00	0.00
0.00	0.00	0.00	0.00	0.00	0.00	0.00	0.00	0.00	0.00
0.00	0.00	0.00	0.00	0.00	0.00	0.00	0.00	0.00	0.00
0.00	0.00	0.00	0.00	0.00	0.00	0.00	0.00	0.00	0.00
0.00	0.00	0.00	0.00	0.00	0.00	0.00	0.00	0.00	0.00
0.00	0.00	0.00	0.00	0.00	0.00	0.00	0.00	0.00	0.00
0.00	0.00	0.00	0.00	0.00	0.00	0.00	0.00	0.00	0.00
0.00	0.00	0.00	0.00	0.00	0.00	0.00	0.00	0.00	0.00
0.00	0.00	0.00	0.00	0.00	0.00	0.00	0.00	0.00	0.00
0.00	0.00	0.00	0.00	0.00	0.00	0.00	0.00		

660 LG GREEN AND AMPT LOSS RATE
STRTL 0.24 STARTING LOSS
DTH 0.15 MOISTURE DEFICIT
PSIF 8.40 WETTING FRONT SUCTION
XKSAT 0.09 HYDRAULIC CONDUCTIVITY
RTIMP 31.00 PERCENT IMPERVIOUS AREA

661 UC CLARK UNITGRAPH
TC 1.50 TIME OF CONCENTRATION
R 1.12 STORAGE COEFFICIENT

662 UA ACCUMULATED-AREA VS. TIME, 11 ORDINATES

0.0	5.0	16.0	30.0	65.0	77.0	84.0	90.0	94.0	97.0
100.0									

***

UNIT HYDROGRAPH PARAMETERS
CLARK TC= 1.50 HR, R= 1.12 HR
SNYDER TP= 0.82 HR, CP= 0.43

UNIT HYDROGRAPH
79 END-OF-PERIOD ORDINATES

5.	15.	30.	49.	70.	102.	152.	189.	202.	205.
203.	200.	196.	190.	184.	176.	169.	163.	154.	143.
132.	123.	114.	106.	98.	91.	84.	78.	73.	68.
63.	58.	54.	50.	46.	43.	40.	37.	34.	32.
30.	28.	26.	24.	22.	20.	19.	18.	16.	15.
14.	13.	12.	11.	10.	10.	9.	8.	8.	7.
7.	6.	6.	5.	5.	5.	4.	4.	4.	3.
3.	3.	3.	3.	2.	2.	2.	2.	2.	

*** *** *** *** ***

HYDROGRAPH AT STATION CD2C

TOTAL RAINFALL = 3.92, TOTAL LOSS = 1.53, TOTAL EXCESS = 2.39

PEAK FLOW	TIME		MAXIMUM AVERAGE FLOW			
			6-HR	24-HR	72-HR	24.92-HR
+ (CFS)	(HR)					
		(CFS)				
+ 337.	12.75		128.	38.	37.	37.
		(INCHES)	1.996	2.368	2.369	2.369
		(AC-FT)	64.	76.	76.	76.

CUMULATIVE AREA = 0.60 SQ MI

*** ***

664 KK **CD2R**

DIVERT RETENTION VOLUME
RELAXED RETENTION VOLUME FROM 44.8 AC-FT.

DT DIVERSION
ISTAD RET2C DIVERSION HYDROGRAPH IDENTIFICATION
DSTRMX 39.70 MAXIMUM VOLUME TO BE DIVERTED

DI INFLOW 0.00 1000.00 10000.00

DQ DIVERTED FLOW 0.00 1000.00 10000.00

***

*** *** *** *** ***

DIVERSION HYDROGRAPH RET2C

PEAK FLOW	TIME		MAXIMUM AVERAGE FLOW			
			6-HR	24-HR	72-HR	24.92-HR
+ (CFS)	(HR)					
		(CFS)				
+ 337.	12.75		74.	20.	19.	19.
		(INCHES)	1.150	1.245	1.245	1.245
		(AC-FT)	37.	40.	40.	40.

CUMULATIVE AREA = 0.60 SQ MI

*** *** *** *** ***

HYDROGRAPH AT STATION CD2R

PEAK FLOW	TIME		MAXIMUM AVERAGE FLOW			
			6-HR	24-HR	72-HR	24.92-HR
+ (CFS)	(HR)					
		(CFS)				
+ 262.	13.50		66.	18.	17.	17.
		(INCHES)	1.032	1.125	1.125	1.125
		(AC-FT)	33.	36.	36.	36.

CUMULATIVE AREA = 0.60 SQ MI

*** ***

```
          **************
          *            *
670 KK    *     CCD2C  *
          *            *
          **************
```

COMBINE FLOW FROM CD2C AND MARIOCPA DRAIN
MARICOPA DRAIN AT 1000 FT EAST OF 75TH AVE AND SOUTH MOUNTAIN AVE. (1/2 MILE
BETWEEN DOBBINS AND BASELINE ROADS.)

```
674 HC          HYDROGRAPH COMBINATION
                     ICOMP          2  NUMBER OF HYDROGRAPHS TO COMBINE
```

***

```
MANE2 NPLAN,NSTM       1      0
```

*** *** *** *** ***

HYDROGRAPH AT STATION CCD2C

PEAK FLOW	TIME		MAXIMUM AVERAGE FLOW			
			6-HR	24-HR	72-HR	24.92-HR
+ (CFS)	(HR)					
		(CFS)				
+ 1081.	13.75		554.	175.	169.	169.
		(INCHES)	0.476	0.603	0.603	0.603
		(AC-FT)	275.	348.	348.	348.

CUMULATIVE AREA = 10.81 SQ MI

*** ***

```
          **************
          *            *
675 KK    *    RCD3C1  *
          *            *
          **************
```

MARICOPA DRAIN FROM JUST EAST OF 75TH AVE ALONG POWERLINE RD (INDIAN
RESERVATION BOUNDARY).
ADJUST SLOPE FROM .0011 TO REFLECT A VELOCITY OF LESS THAN 5 FT/SEC

HYDROGRAPH ROUTING DATA

```
679 RS          STORAGE ROUTING
                     NSTPS          2  NUMBER OF SUBREACHES
                      ITYP       ELEV  TYPE OF INITIAL CONDITION
                    RSVRIC      -1.00  INITIAL CONDITION
                         X       0.00 WORKING R AND D COEFFICIENT

680 RC          NORMAL DEPTH CHANNEL
                       ANL      0.030  LEFT OVERBANK N-VALUE
                      ANCH      0.030  MAIN CHANNEL N-VALUE
                       ANR      0.030  RIGHT OVERBANK N-VALUE
                     RLNTH       3700.  REACH LENGTH
                      SEL      0.0007  ENERGY SLOPE
                     ELMAX         0.0  MAX. ELEV. FOR STORAGE/OUTFLOW CALCULATION
```

CROSS-SECTION DATA

		--- LEFT OVERBANK ---		+ ------ MAIN CHANNEL -------			+ --- RIGHT OVERBANK ---		
682 RY	ELEVATION	986.20	986.10	986.00	981.00	981.00	986.00	986.10	986.20
681 RX	DISTANCE	0.00	10.00	20.00	45.00	165.00	190.00	200.00	210.00

***

COMPUTED STORAGE-OUTFLOW-ELEVATION DATA

STORAGE	0.00	2.82	5.71	8.66	11.67	14.74	17.88	21.09	24.35	27.68
OUTFLOW	0.00	18.26	58.18	114.79	186.14	271.09	368.87	478.94	600.91	734.45
ELEVATION	981.00	981.27	981.55	981.82	982.09	982.37	982.64	982.92	983.19	983.46
STORAGE	31.08	34.53	38.06	41.64	45.29	49.00	52.78	56.62	60.52	64.81
OUTFLOW	879.34	1035.39	1202.46	1380.43	1569.22	1768.76	1979.01	2199.93	2431.52	2694.91
ELEVATION	983.74	984.01	984.28	984.56	984.83	985.11	985.38	985.65	985.93	986.20

*** *** *** *** ***

HYDROGRAPH AT STATION RCD3C1

PEAK FLOW	TIME		MAXIMUM AVERAGE FLOW			
			6-HR	24-HR	72-HR	24.92-HR
+ (CFS)	(HR)					
		(CFS)				
+ 1030.	14.17		546.	171.	165.	165.
		(INCHES)	0.469	0.588	0.588	0.588
		(AC-FT)	271.	339.	339.	339.

PEAK STORAGE	TIME	MAXIMUM AVERAGE STORAGE			
		6-HR	24-HR	72-HR	24.92-HR
+ (AC-FT)	(HR)				
17.	14.17	11.	4.	4.	4.

PEAK STAGE	TIME	MAXIMUM AVERAGE STAGE			
		6-HR	24-HR	72-HR	24.92-HR
+ (FEET)	(HR)				
984.00	14.17	983.00	981.73	981.70	981.70

CUMULATIVE AREA = 10.81 SQ MI

*** ***

```
          **************
          *            *
683 KK    *     CD4C   *
          *            *
          **************
```

SUB-BASIN CD4C
24-HOUR SCS TYPE II RAINFALL WAS USED TO FIND TC & R FOR THIS BASIN
THIS BASIN USED RAINFALL REDUCTION FACTOR OF .934
L = .64 Kb = .051 Adj. Slope = 9.0

SUBBASIN RUNOFF DATA

```
688 BA          SUBBASIN CHARACTERISTICS
                     TAREA       0.19  SUBBASIN AREA

                PRECIPITATION DATA

32 PB                STORM       3.92  BASIN TOTAL PRECIPITATION

32 PI           INCREMENTAL PRECIPITATION PATTERN
                  0.00  0.00  0.00  0.00  0.00  0.00  0.00  0.00  0.00  0.00
                  0.00  0.00  0.00  0.00  0.00  0.00  0.00  0.00  0.00  0.00
                  0.00  0.00  0.00  0.00  0.00  0.00  0.00  0.00  0.00  0.00
                  0.00  0.00  0.00  0.00  0.00  0.00  0.00  0.00  0.00  0.00
                  0.00  0.00  0.00  0.00  0.00  0.00  0.00  0.00  0.00  0.00
                  0.00  0.00  0.00  0.00  0.00  0.00  0.00  0.00  0.00  0.00
                  0.00  0.00  0.00  0.00  0.00  0.00  0.00  0.00  0.00  0.00
                  0.00  0.00  0.00  0.00  0.00  0.00  0.00  0.00  0.00  0.00
                  0.00  0.00  0.00  0.00  0.00  0.00  0.00  0.00  0.00  0.00
                  0.00  0.00  0.00  0.00  0.00  0.00  0.00  0.00  0.00  0.00
                  0.00  0.00  0.00  0.00  0.00  0.00  0.00  0.00  0.00  0.00
                  0.00  0.00  0.00  0.00  0.00  0.00  0.00  0.00  0.00  0.00
                  0.00  0.00  0.00  0.00  0.00  0.00  0.00  0.00  0.01  0.00
                  0.01  0.01  0.01  0.01  0.01  0.01  0.01  0.01  0.03  0.03
                  0.03  0.09  0.09  0.09  0.01  0.01  0.01  0.01  0.01  0.01
                  0.01  0.01  0.01  0.01  0.01  0.01  0.00  0.00  0.00  0.00
                  0.00  0.00  0.00  0.00  0.00  0.00  0.00  0.00  0.00  0.00
                  0.00  0.00  0.00  0.00  0.00  0.00  0.00  0.00  0.00  0.00
                  0.00  0.00  0.00  0.00  0.00  0.00  0.00  0.00  0.00  0.00
                  0.00  0.00  0.00  0.00  0.00  0.00  0.00  0.00  0.00  0.00
                  0.00  0.00  0.00  0.00  0.00  0.00  0.00  0.00  0.00  0.00
                  0.00  0.00  0.00  0.00  0.00  0.00  0.00  0.00  0.00  0.00
                  0.00  0.00  0.00  0.00  0.00  0.00  0.00  0.00  0.00  0.00
```

```
                0.00      0.00      0.00      0.00      0.00      0.00      0.00      0.00      0.00      0.00
                0.00      0.00      0.00      0.00      0.00      0.00      0.00      0.00      0.00      0.00
                0.00      0.00      0.00      0.00      0.00      0.00      0.00      0.00      0.00      0.00
                0.00      0.00      0.00      0.00      0.00      0.00      0.00      0.00      0.00      0.00
                0.00      0.00      0.00      0.00      0.00      0.00      0.00      0.00

689 LG          GREEN AND AMPT LOSS RATE
                     STRTL       0.25  STARTING LOSS
                       DTH       0.25  MOISTURE DEFICIT
                      PSIF       4.90  WETTING FRONT SUCTION
                     XKSAT       0.35  HYDRAULIC CONDUCTIVITY
                     RTIMP      29.00  PERCENT IMPERVIOUS AREA

690 UC          CLARK UNITGRAPH
                        TC       0.77  TIME OF CONCENTRATION
                         R       0.50  STORAGE COEFFICIENT

691 UA          ACCUMULATED-AREA VS. TIME,  11 ORDINATES
                      0.0       5.0      16.0      30.0      65.0      77.0      84.0      90.0      94.0      97.0
                    100.0

                                                    ***

                                          UNIT HYDROGRAPH PARAMETERS
                                    CLARK   TC=  0.77 HR,       R=  0.50 HR
                                  SNYDER   TP=  0.41 HR,      CP=  0.47

                                          UNIT HYDROGRAPH
                                      36 END-OF-PERIOD ORDINATES
                      7.       26.       59.      107.      138.      137.      130.      120.      109.       97.
                     83.       70.       60.       50.       43.       36.       31.       26.       22.       18.
                     16.       13.       11.        9.        8.        7.        6.        5.        4.        3.
                      3.        2.        2.        2.        2.        1.

          ***             ***             ***             ***             ***

                                    HYDROGRAPH AT STATION     CD4C

           TOTAL RAINFALL =    3.92, TOTAL LOSS =    1.99, TOTAL EXCESS =    1.93

          PEAK FLOW     TIME                          MAXIMUM AVERAGE FLOW
                                                 6-HR        24-HR       72-HR      24.92-HR
        +   (CFS)       (HR)
                        (CFS)
        +     165.     12.33                     32.         10.          9.          9.
                      (INCHES)                 1.589       1.916       1.918       1.918
                      (AC-FT)                     16.         19.         19.         19.

                                CUMULATIVE AREA =    0.19 SQ MI



*** *** *** *** *** *** *** *** *** *** *** *** *** *** *** *** *** *** *** *** *** *** *** *** *** *** *** *** *** *** *** *** *** *** ***

                    **************
                    *            *
693 KK              *     CD4R   *
                    *            *
                    **************
                                    DIVERT RETENTION VOLUME

               DT          DIVERSION
                             ISTAD      RETD4C  DIVERSION HYDROGRAPH IDENTIFICATION
                            DSTRMX       13.60  MAXIMUM VOLUME TO BE DIVERTED

               DI            INFLOW        0.00   1000.00  10000.00

               DQ      DIVERTED FLOW       0.00   1000.00  10000.00

                                                                ***

                ***             ***             ***             ***             ***

                                  DIVERSION HYDROGRAPH    RETD4C

          PEAK FLOW     TIME                          MAXIMUM AVERAGE FLOW
                                                 6-HR        24-HR       72-HR      24.92-HR
        +   (CFS)       (HR)
                        (CFS)
        +     165.     12.33                     25.          7.          7.          7.
                      (INCHES)                 1.244       1.342       1.342       1.342
                      (AC-FT)                     13.         14.         14.         14.

                                CUMULATIVE AREA =    0.19 SQ MI

                ***             ***             ***             ***             ***

                                    HYDROGRAPH AT STATION     CD4R

          PEAK FLOW     TIME                          MAXIMUM AVERAGE FLOW
                                                 6-HR        24-HR       72-HR      24.92-HR
        +   (CFS)       (HR)
                        (CFS)
        +      62.     13.00                     10.          3.          3.          3.
                      (INCHES)                 0.491       0.576       0.576       0.576
                      (AC-FT)                      5.          6.          6.          6.

                                CUMULATIVE AREA =    0.19 SQ MI



*** *** *** *** *** *** *** *** *** *** *** *** *** *** *** *** *** *** *** *** *** *** *** *** *** *** *** *** *** *** *** *** *** *** ***

                    **************
                    *            *
698 KK              *    RCD3C2  *
                    *            *
                    **************
                                ROUTE FLOW FROM COMPUTATION POINT CPCD4C TO COMPUTATION POINT CPCD3C
                                CROSS-SECTION REVISED TO REFLECT URBANIZED CONDITIONS

                            HYDROGRAPH ROUTING DATA

701 RS                        STORAGE ROUTING
                                   NSTPS          3  NUMBER OF SUBREACHES
                                   ITYP       ELEV  TYPE OF INITIAL CONDITION
                                  RSVRIC      -1.00  INITIAL CONDITION
                                       X       0.00 WORKING R AND D COEFFICIENT

702 RC                        NORMAL DEPTH CHANNEL
                                     ANL      0.035  LEFT OVERBANK N-VALUE
                                    ANCH      0.035  MAIN CHANNEL N-VALUE
                                     ANR      0.035  RIGHT OVERBANK N-VALUE
                                   RLNTH       5200.  REACH LENGTH
                                     SEL     0.0024  ENERGY SLOPE
                                   ELMAX        0.0  MAX. ELEV. FOR STORAGE/OUTFLOW CALCULATION

                                                CROSS-SECTION DATA
                                        --- LEFT OVERBANK --- + ------ MAIN CHANNEL ------- + --- RIGHT OVERBANK ---
704 RY                  ELEVATION    988.00    987.00    986.00    983.00    983.00    986.00    987.00    988.00
703 RX                  DISTANCE       0.00     40.00     50.00     55.00     60.00     65.00     70.00    110.00

                                                    ***

                                        COMPUTED STORAGE-OUTFLOW-ELEVATION DATA

                    STORAGE       0.00      0.17      0.37      0.60      0.85      1.13      1.44      1.77      2.14      2.53
                    OUTFLOW       0.00      1.15      3.73      7.55     12.59     18.89     26.49     35.45     45.84     57.71
                  ELEVATION     983.00    983.26    983.53    983.79    984.05    984.32    984.58    984.84    985.11    985.37

                    STORAGE       2.95      3.40      3.89      4.49      5.23      6.08      7.24      9.04     11.50     14.63
                    OUTFLOW      71.12     86.14    105.20    128.33    154.81    185.24    217.79    261.32    318.74    392.90
                  ELEVATION     985.63    985.90    986.16    986.42    986.68    986.95    987.21    987.47    987.74    988.00

                ***             ***             ***             ***             ***

                                    HYDROGRAPH AT STATION    RCD3C2

          PEAK FLOW     TIME                          MAXIMUM AVERAGE FLOW
                                                 6-HR        24-HR       72-HR      24.92-HR
        +   (CFS)       (HR)
                        (CFS)
        +      34.     13.67                     10.          3.          3.          3.
                      (INCHES)                 0.468       0.559       0.559       0.559
                      (AC-FT)                      5.          6.          6.          6.

         PEAK STORAGE   TIME                          MAXIMUM AVERAGE STORAGE
                                                 6-HR        24-HR       72-HR      24.92-HR
        +  (AC-FT)      (HR)
                1.     13.67                      0.          0.          0.          0.

          PEAK STAGE    TIME                          MAXIMUM AVERAGE STAGE
                                                 6-HR        24-HR       72-HR      24.92-HR
        +   (FEET)      (HR)
            984.81     13.67                   983.80      983.28      983.27      983.27

                                CUMULATIVE AREA =    0.19 SQ MI

*** *** *** *** *** *** *** *** *** *** *** *** *** *** *** *** *** *** *** *** *** *** *** *** *** *** *** *** *** *** *** *** *** *** ***

                    **************
                    *            *
705 KK              *      CD3C  *
                    *            *
                    **************
                                SUB-BASIN CD3C
                                24-HOUR SCS TYPE II RAINFALL WAS USED TO FIND TC & R FOR THIS BASIN
                                THIS BASIN USED RAINFALL REDUCTION FACTOR OF  .934
                                  L = 1.15  Kb = .044  Adj. Slope =   10.0
```

SUBBASIN RUNOFF DATA

710 BA SUBBASIN CHARACTERISTICS
TAREA 0.48 SUBBASIN AREA

PRECIPITATION DATA

32 PB STORM 3.92 BASIN TOTAL PRECIPITATION

32 PI INCREMENTAL PRECIPITATION PATTERN

0.00	0.00	0.00	0.00	0.00	0.00	0.00	0.00	0.00	0.00
0.00	0.00	0.00	0.00	0.00	0.00	0.00	0.00	0.00	0.00
0.00	0.00	0.00	0.00	0.00	0.00	0.00	0.00	0.00	0.00
0.00	0.00	0.00	0.00	0.00	0.00	0.00	0.00	0.00	0.00
0.00	0.00	0.00	0.00	0.00	0.00	0.00	0.00	0.00	0.00
0.00	0.00	0.00	0.00	0.00	0.00	0.00	0.00	0.00	0.00
0.00	0.00	0.00	0.00	0.00	0.00	0.00	0.00	0.00	0.00
0.00	0.00	0.00	0.00	0.00	0.00	0.00	0.00	0.00	0.00
0.00	0.00	0.00	0.00	0.00	0.00	0.00	0.00	0.00	0.00
0.00	0.00	0.00	0.00	0.00	0.00	0.00	0.00	0.00	0.00
0.00	0.00	0.00	0.00	0.00	0.00	0.00	0.00	0.00	0.00
0.00	0.00	0.00	0.00	0.00	0.00	0.00	0.00	0.00	0.00
0.00	0.00	0.00	0.00	0.00	0.00	0.00	0.01	0.00	0.01
0.01	0.01	0.01	0.01	0.01	0.01	0.01	0.01	0.03	0.03
0.03	0.09	0.09	0.09	0.01	0.01	0.01	0.01	0.01	0.01
0.01	0.01	0.01	0.01	0.01	0.01	0.00	0.00	0.00	0.00
0.00	0.00	0.00	0.00	0.00	0.00	0.00	0.00	0.00	0.00
0.00	0.00	0.00	0.00	0.00	0.00	0.00	0.00	0.00	0.00
0.00	0.00	0.00	0.00	0.00	0.00	0.00	0.00	0.00	0.00
0.00	0.00	0.00	0.00	0.00	0.00	0.00	0.00	0.00	0.00
0.00	0.00	0.00	0.00	0.00	0.00	0.00	0.00	0.00	0.00
0.00	0.00	0.00	0.00	0.00	0.00	0.00	0.00	0.00	0.00
0.00	0.00	0.00	0.00	0.00	0.00	0.00	0.00	0.00	0.00
0.00	0.00	0.00	0.00	0.00	0.00	0.00	0.00	0.00	0.00
0.00	0.00	0.00	0.00	0.00	0.00	0.00	0.00	0.00	0.00
0.00	0.00	0.00	0.00	0.00	0.00	0.00	0.00	0.00	0.00
0.00	0.00	0.00	0.00	0.00	0.00	0.00	0.00	0.00	0.00
0.00	0.00	0.00	0.00	0.00	0.00	0.00	0.00	0.00	0.00
0.00	0.00	0.00	0.00	0.00	0.00	0.00	0.00		

711 LG GREEN AND AMPT LOSS RATE
STRTL 0.24 STARTING LOSS
DTH 0.15 MOISTURE DEFICIT
PSIF 7.00 WETTING FRONT SUCTION
XKSAT 0.14 HYDRAULIC CONDUCTIVITY
RTIMP 33.00 PERCENT IMPERVIOUS AREA

712 UC CLARK UNITGRAPH
TC 0.93 TIME OF CONCENTRATION
R 0.58 STORAGE COEFFICIENT

713 UA ACCUMULATED-AREA VS. TIME, 11 ORDINATES

0.0	5.0	16.0	30.0	65.0	77.0	84.0	90.0	94.0	97.0
100.0									

***

UNIT HYDROGRAPH PARAMETERS
CLARK TC= 0.93 HR, R= 0.58 HR
SNYDER TP= 0.50 HR, CP= 0.48

UNIT HYDROGRAPH
42 END-OF-PERIOD ORDINATES

11.	44.	91.	171.	260.	298.	295.	283.	266.	246.
226.	204.	177.	154.	133.	115.	100.	86.	75.	65.
56.	48.	42.	36.	31.	27.	24.	20.	18.	15.
13.	11.	10.	9.	7.	6.	6.	5.	4.	4.
3.	3.								

*** *** *** *** ***

HYDROGRAPH AT STATION CD3C

TOTAL RAINFALL = 3.92, TOTAL LOSS = 1.60, TOTAL EXCESS = 2.32

PEAK FLOW	TIME		MAXIMUM AVERAGE FLOW			
			6-HR	24-HR	72-HR	24.92-HR
+ (CFS)	(HR)					
		(CFS)				
+ 428.	12.42		100.	30.	29.	29.
		(INCHES)	1.935	2.307	2.310	2.310
		(AC-FT)	50.	59.	59.	59.

CUMULATIVE AREA = 0.48 SQ MI

*** ***

****
* *
715 KK * CD3R *
* *

****
DIVERT RETENTION VOLUME
RELAXED RETENTION VOLUME FROM 35.2 AC-FT.

DT DIVERSION
ISTAD RETD3C DIVERSION HYDROGRAPH IDENTIFICATION
DSTRMX 32.60 MAXIMUM VOLUME TO BE DIVERTED

DI INFLOW 0.00 1000.00 10000.00

DQ DIVERTED FLOW 0.00 1000.00 10000.00

***

*** *** *** *** ***

DIVERSION HYDROGRAPH RETD3C

PEAK FLOW	TIME		MAXIMUM AVERAGE FLOW			
			6-HR	24-HR	72-HR	24.92-HR
+ (CFS)	(HR)					
		(CFS)				
+ 428.	12.42		60.	16.	16.	16.
		(INCHES)	1.171	1.273	1.273	1.273
		(AC-FT)	30.	33.	33.	33.

CUMULATIVE AREA = 0.48 SQ MI

*** *** *** *** ***

HYDROGRAPH AT STATION CD3R

PEAK FLOW	TIME		MAXIMUM AVERAGE FLOW			
			6-HR	24-HR	72-HR	24.92-HR
+ (CFS)	(HR)					
		(CFS)				
+ 321.	12.83		48.	13.	13.	13.
		(INCHES)	0.932	1.036	1.036	1.036
		(AC-FT)	24.	27.	27.	27.

CUMULATIVE AREA = 0.48 SQ MI

*** ***

****
* *
721 KK * CPCD3C *
* *
****

COMBINE ROUTED FLOW FROM COMPUTATION POINT CPCD4C, ROUTED FLOW FROM DIVERSION
POINT AT BASELINE ROAD WITH RUNOFF FROM SUB-BASIN CD3C

724 HC HYDROGRAPH COMBINATION
ICOMP 3 NUMBER OF HYDROGRAPHS TO COMBINE

***

MANE2 NPLAN,NSTM 1 0
MANE2 NPLAN,NSTM 1 0

*** *** *** *** ***

HYDROGRAPH AT STATION CPCD3C

PEAK FLOW	TIME		MAXIMUM AVERAGE FLOW			
			6-HR	24-HR	72-HR	24.92-HR
+ (CFS)	(HR)					
		(CFS)				
+ 1112.	14.08		584.	187.	180.	180.
		(INCHES)	0.473	0.607	0.607	0.607
		(AC-FT)	289.	371.	371.	371.

CUMULATIVE AREA = 11.48 SQ MI

*** ***

****
* *
725 KK * A67AC *
* *
****

SUB-BASIN A67AC
24-HOUR SCS TYPE II RAINFALL WAS USED TO FIND TC & R FOR THIS BASIN
THIS BASIN USED RAINFALL REDUCTION FACTOR OF .934
L = 1.65 Kb = .042 Adj. Slope = 7.0

SUBBASIN RUNOFF DATA

730 BA SUBBASIN CHARACTERISTICS

TAREA 0.62 SUBBASIN AREA

PRECIPITATION DATA

32 PB STORM 3.92 BASIN TOTAL PRECIPITATION

32 PI INCREMENTAL PRECIPITATION PATTERN

0.00	0.00	0.00	0.00	0.00	0.00	0.00	0.00	0.00	0.00
0.00	0.00	0.00	0.00	0.00	0.00	0.00	0.00	0.00	0.00
0.00	0.00	0.00	0.00	0.00	0.00	0.00	0.00	0.00	0.00
0.00	0.00	0.00	0.00	0.00	0.00	0.00	0.00	0.00	0.00
0.00	0.00	0.00	0.00	0.00	0.00	0.00	0.00	0.00	0.00
0.00	0.00	0.00	0.00	0.00	0.00	0.00	0.00	0.00	0.00
0.00	0.00	0.00	0.00	0.00	0.00	0.00	0.00	0.00	0.00
0.00	0.00	0.00	0.00	0.00	0.00	0.00	0.00	0.00	0.00
0.00	0.00	0.00	0.00	0.00	0.00	0.00	0.00	0.00	0.00
0.00	0.00	0.00	0.00	0.00	0.00	0.00	0.00	0.00	0.00
0.00	0.00	0.00	0.00	0.00	0.00	0.00	0.00	0.00	0.00
0.00	0.00	0.00	0.00	0.00	0.00	0.00	0.00	0.00	0.00
0.00	0.00	0.00	0.00	0.00	0.00	0.00	0.01	0.00	0.01
0.01	0.01	0.01	0.01	0.01	0.01	0.01	0.01	0.03	0.03
0.03	0.09	0.09	0.09	0.01	0.01	0.01	0.01	0.01	0.01
0.01	0.01	0.01	0.01	0.01	0.01	0.00	0.00	0.00	0.00
0.00	0.00	0.00	0.00	0.00	0.00	0.00	0.00	0.00	0.00
0.00	0.00	0.00	0.00	0.00	0.00	0.00	0.00	0.00	0.00
0.00	0.00	0.00	0.00	0.00	0.00	0.00	0.00	0.00	0.00
0.00	0.00	0.00	0.00	0.00	0.00	0.00	0.00	0.00	0.00
0.00	0.00	0.00	0.00	0.00	0.00	0.00	0.00	0.00	0.00
0.00	0.00	0.00	0.00	0.00	0.00	0.00	0.00	0.00	0.00
0.00	0.00	0.00	0.00	0.00	0.00	0.00	0.00	0.00	0.00
0.00	0.00	0.00	0.00	0.00	0.00	0.00	0.00	0.00	0.00
0.00	0.00	0.00	0.00	0.00	0.00	0.00	0.00	0.00	0.00
0.00	0.00	0.00	0.00	0.00	0.00	0.00	0.00	0.00	0.00
0.00	0.00	0.00	0.00	0.00	0.00	0.00	0.00	0.00	0.00
0.00	0.00	0.00	0.00	0.00	0.00	0.00	0.00	0.00	0.00
0.00	0.00	0.00	0.00	0.00	0.00	0.00	0.00		

731 LG GREEN AND AMPT LOSS RATE

STRTL	0.25	STARTING LOSS
DTH	0.25	MOISTURE DEFICIT
PSIF	5.10	WETTING FRONT SUCTION
XKSAT	0.32	HYDRAULIC CONDUCTIVITY
RTIMP	34.00	PERCENT IMPERVIOUS AREA

732 UC CLARK UNITGRAPH

TC	1.50	TIME OF CONCENTRATION
R	1.14	STORAGE COEFFICIENT

733 UA ACCUMULATED-AREA VS. TIME, 11 ORDINATES

0.0	5.0	16.0	30.0	65.0	77.0	84.0	90.0	94.0	97.0
100.0									

***

UNIT HYDROGRAPH PARAMETERS

CLARK TC= 1.50 HR, R= 1.14 HR

SNYDER TP= 0.83 HR, CP= 0.42

UNIT HYDROGRAPH

81 END-OF-PERIOD ORDINATES

5.	15.	30.	50.	71.	104.	154.	192.	205.	208.
207.	204.	200.	195.	188.	181.	173.	167.	158.	147.
136.	127.	118.	110.	102.	95.	88.	82.	76.	71.
66.	61.	57.	53.	49.	46.	42.	39.	37.	34.
32.	29.	27.	25.	24.	22.	20.	19.	18.	16.
15.	14.	13.	12.	11.	11.	10.	9.	8.	8.
7.	7.	6.	6.	5.	5.	5.	4.	4.	4.
4.	3.	3.	3.	3.	2.	2.	2.	2.	2.
2.									

*** *** *** *** ***

HYDROGRAPH AT STATION A67AC

TOTAL RAINFALL = 3.92, TOTAL LOSS = 1.83, TOTAL EXCESS = 2.09

PEAK FLOW	TIME		MAXIMUM AVERAGE FLOW			
			6-HR	24-HR	72-HR	24.92-HR
+ (CFS)	(HR)					
		(CFS)				
+ 291.	12.75		111.	34.	33.	33.
		(INCHES)	1.663	2.068	2.069	2.069
		(AC-FT)	55.	68.	68.	68.

CUMULATIVE AREA = 0.62 SQ MI

*** ***

****

* *

735 KK * A67AR *

* *

****

DIVERT RETENTION VOLUME

DT DIVERSION

ISTAD	RET67A	DIVERSION HYDROGRAPH IDENTIFICATION
DSTRMX	38.40	MAXIMUM VOLUME TO BE DIVERTED

DI INFLOW 0.00 1000.00 10000.00

DQ DIVERTED FLOW 0.00 1000.00 10000.00

***

*** *** *** *** ***

DIVERSION HYDROGRAPH RET67A

PEAK FLOW	TIME		MAXIMUM AVERAGE FLOW			
			6-HR	24-HR	72-HR	24.92-HR
+ (CFS)	(HR)					
		(CFS)				
+ 291.	12.75		70.	19.	19.	19.
		(INCHES)	1.059	1.165	1.165	1.165
		(AC-FT)	35.	38.	38.	38.

CUMULATIVE AREA = 0.62 SQ MI

*** *** *** *** ***

HYDROGRAPH AT STATION A67AR

PEAK FLOW	TIME		MAXIMUM AVERAGE FLOW			
			6-HR	24-HR	72-HR	24.92-HR
+ (CFS)	(HR)					
		(CFS)				
+ 205.	13.58		53.	15.	14.	14.
		(INCHES)	0.803	0.904	0.904	0.904
		(AC-FT)	26.	30.	30.	30.

CUMULATIVE AREA = 0.62 SQ MI

*** ***

****

* *

740 KK * RCD4C1 *

* *

****

ROUTE FLOW FROM SUB-BASIN 67AC NORTH TO RIVER

CROSS-SECTION REVISED TO REFLECT URBANIZED CONDITIONS

HYDROGRAPH ROUTING DATA

743 RS STORAGE ROUTING

NSTPS	2	NUMBER OF SUBREACHES
ITYP	ELEV	TYPE OF INITIAL CONDITION
RSVRIC	-1.00	INITIAL CONDITION
X	0.00	WORKING R AND D COEFFICIENT

744 RC NORMAL DEPTH CHANNEL

ANL	0.035	LEFT OVERBANK N-VALUE
ANCH	0.035	MAIN CHANNEL N-VALUE
ANR	0.035	RIGHT OVERBANK N-VALUE
RLNTH	4200.	REACH LENGTH
SEL	0.0015	ENERGY SLOPE
ELMAX	0.0	MAX. ELEV. FOR STORAGE/OUTFLOW CALCULATION

CROSS-SECTION DATA

		--- LEFT OVERBANK ---		+	------ MAIN CHANNEL -------		+	--- RIGHT OVERBANK ---	
746 RY	ELEVATION	1000.00	1000.00	1000.00	995.00	995.00	1000.00	1000.00	1000.00
745 RX	DISTANCE	0.00	40.00	60.00	85.00	95.00	120.00	140.00	160.00

***

COMPUTED STORAGE-OUTFLOW-ELEVATION DATA

STORAGE	0.00	0.29	0.64	1.06	1.55	2.10	2.72	3.41	4.17	4.99
OUTFLOW	0.00	1.87	6.27	13.06	22.35	34.31	49.12	66.97	88.04	112.52
ELEVATION	995.00	995.26	995.53	995.79	996.05	996.32	996.58	996.84	997.11	997.37
STORAGE	5.88	6.83	7.85	8.94	10.10	11.32	12.61	13.96	15.39	16.88
OUTFLOW	140.58	172.41	208.17	248.04	292.19	340.78	393.97	451.93	514.80	582.79
ELEVATION	997.63	997.90	998.16	998.42	998.68	998.95	999.21	999.47	999.74	1000.00

*** *** *** *** ***

HYDROGRAPH AT STATION RCD4C1

PEAK FLOW (CFS)	TIME (HR)		MAXIMUM AVERAGE FLOW 6-HR	24-HR	72-HR	24.92-HR
		(CFS)				
137.	14.33		52.	15.	14.	14.
		(INCHES)	0.780	0.885	0.885	0.885
		(AC-FT)	26.	29.	29.	29.

PEAK STORAGE (AC-FT)	TIME (HR)	MAXIMUM AVERAGE STORAGE 6-HR	24-HR	72-HR	24.92-HR
3.	14.33	1.	0.	0.	0.

PEAK STAGE (FEET)	TIME (HR)	MAXIMUM AVERAGE STAGE 6-HR	24-HR	72-HR	24.92-HR
997.60	14.33	996.49	995.50	995.49	995.49

CUMULATIVE AREA = 0.62 SQ MI

1

RUNOFF SUMMARY
FLOW IN CUBIC FEET PER SECOND
TIME IN HOURS, AREA IN SQUARE MILES

OPERATION	STATION	PEAK FLOW	TIME OF PEAK	AVERAGE FLOW FOR MAXIMUM PERIOD 6-HOUR	24-HOUR	72-HOUR	BASIN AREA	MAXIMUM STAGE	TIME OF MAX STAGE
HYDROGRAPH AT	VR47C	460.	12.67	152.	45.	44.	0.87		
DIVERSION TO	RET47C	460.	14.25	127.	34.	33.	0.87		
HYDROGRAPH AT	VR47R	157.	14.25	38.	11.	11.	0.87		
ROUTED TO	RBR511	97.	14.92	36.	11.	10.	0.87	1003.89	14.92
HYDROGRAPH AT	AVR51C	261.	12.33	55.	16.	16.	0.28		
DIVERSION TO	RET51C	261.	13.00	41.	11.	10.	0.28		
HYDROGRAPH AT	AVR51R	133.	13.00	19.	6.	5.	0.28		
ROUTED TO	RBR512	82.	13.58	19.	5.	5.	0.28	1008.64	13.58
HYDROGRAPH AT	BR51C	432.	12.58	122.	37.	36.	0.70		
DIVERSION TO	RET159	432.	13.58	94.	25.	25.	0.70		
HYDROGRAPH AT	BR51R	196.	13.58	40.	12.	11.	0.70		
3 COMBINED AT	CB51C	278.	13.58	92.	28.	27.	1.85		
HYDROGRAPH AT	DR43C	1391.	12.17	176.	55.	53.	0.92		
DIVERSION TO	RET43C	451.	12.17	45.	14.	14.	0.92		
HYDROGRAPH AT	DR43R	1391.	12.17	150.	41.	39.	0.92		
ROUTED TO	43BASN	20.	12.17	20.	11.	10.	0.92	7.82	16.75
ROUTED TO	ROA51A	20.	24.92	20.	11.	10.	0.92		
ROUTED TO	ROA51B	20.	24.92	20.	11.	10.	0.92		
HYDROGRAPH AT	OA51B	2353.	12.00	191.	57.	55.	1.03		
DIVERSION TO	RET51	2353.	12.17	153.	41.	39.	1.03		
HYDROGRAPH AT	OA51R	900.	12.17	55.	16.	16.	1.03		
ROUTED TO	DRBASN	20.	12.33	20.	11.	10.	1.03	2.08	15.42
HYDROGRAPH AT	ER47B	777.	12.00	63.	19.	18.	0.34		
ROUTED TO	ERBASN	20.	11.92	20.	12.	12.	0.34	3.19	13.00
ROUTED TO	RER47B	20.	12.25	20.	12.	12.	0.34		
3 COMBINED AT	CDR51	60.	24.92	60.	33.	32.	2.29		
ROUTED TO	RDR51A	60.	24.92	60.	33.	32.	2.29		
HYDROGRAPH AT	SM51C	327.	12.42	79.	22.	22.	0.51		
DIVERSION TO	RET51C	327.	12.92	44.	12.	11.	0.51		
HYDROGRAPH AT	SM51R	248.	12.92	40.	11.	10.	0.51		
2 COMBINED AT	C51SM	308.	12.92	100.	44.	42.	2.80		
ROUTED TO	RDR51B	299.	13.00	100.	44.	42.	2.80		
ROUTED TO	BRBASN	50.	13.17	50.	26.	25.	2.80	4.16	24.92
ROUTED TO	DBR51	50.	24.92	50.	26.	25.	2.80		
2 COMBINED AT	CB51D	328.	13.58	142.	54.	52.	4.66		
ROUTED TO	RB1591	221.	14.33	138.	50.	49.	4.66	996.34	14.33
HYDROGRAPH AT	AVR55C	152.	12.58	51.	15.	14.	0.24		
DIVERSION TO	RET55C	152.	15.17	48.	13.	12.	0.24		
HYDROGRAPH AT	AVR55R	23.	15.17	7.	2.	2.	0.24		
ROUTED TO	RB1592	13.	16.25	6.	2.	2.	0.24	999.96	16.25
HYDROGRAPH AT	BR159C	300.	12.67	110.	33.	32.	0.68		
DIVERSION TO	RET159	300.	13.67	73.	20.	19.	0.68		
HYDROGRAPH AT	BR159R	193.	13.67	48.	14.	13.	0.68		
HYDROGRAPH AT	VR59C	117.	12.75	39.	10.	10.	0.23		
ROUTED TO	RB1593	114.	13.00	39.	10.	10.	0.23	1000.83	13.00
4 COMBINED AT	CB159N	402.	14.17	212.	76.	73.	5.81		
HYDROGRAPH AT	OA55C	97.	12.75	37.	11.	10.	0.25		
DIVERSION TO	RET55C	27.	12.75	4.	1.	1.	0.25		
HYDROGRAPH AT	OA55R	97.	12.75	36.	9.	9.	0.25		
ROUTED TO	RD57C	90.	13.17	35.	9.	9.	0.25	1023.76	13.17

+	HYDROGRAPH AT	DR57C	40.	12.75	16.	5.	5.	0.12		
+	DIVERSION TO	RET27	40.	0.00	16.	5.	5.	0.12		
+	HYDROGRAPH AT	DR57R	0.	0.00	0.	0.	0.	0.12		
+	2 COMBINED AT	CDR57C	90.	13.17	35.	9.	9.	0.36		
+ +	ROUTED TO	RD59C	89.	13.33	35.	9.	9.	0.36	1020.32	13.33
+	HYDROGRAPH AT	DR59C	45.	12.83	21.	7.	6.	0.12		
+	DIVERSION TO	RET59C	45.	15.67	19.	5.	5.	0.12		
+	HYDROGRAPH AT	DR59R	13.	15.67	5.	1.	1.	0.12		
+	2 COMBINED AT	CDR59C	89.	13.33	38.	11.	10.	0.48		
+ +	ROUTED TO	RB259	83.	13.75	38.	11.	10.	0.48	1018.29	13.75
+	HYDROGRAPH AT	BR259C	778.	12.42	180.	55.	53.	1.01		
+	DIVERSION TO	RET259	778.	13.00	124.	34.	33.	1.01		
+	HYDROGRAPH AT	BR259R	456.	13.00	74.	21.	21.	1.01		
+	2 COMBINED AT	CB259S	472.	13.00	112.	32.	31.	1.49		
+	2 COMBINED AT	CB259	590.	13.00	323.	108.	104.	7.30		
+ +	ROUTED TO	RBR163	576.	14.25	320.	106.	102.	7.30	994.93	14.25
+	HYDROGRAPH AT	BR263C	294.	12.50	89.	28.	27.	0.49		
+	DIVERSION TO	RET263	294.	13.08	53.	15.	14.	0.49		
+	HYDROGRAPH AT	BR263R	218.	13.08	47.	13.	13.	0.49		
+	2 COMBINED AT	63S	654.	14.17	366.	119.	115.	7.79		
+	HYDROGRAPH AT	BR163C	208.	12.33	43.	12.	12.	0.25		
+	DIVERSION TO	RET163	163.	12.33	12.	3.	3.	0.25		
+	HYDROGRAPH AT	BR163R	208.	12.33	34.	9.	9.	0.25		
+	2 COMBINED AT	CB163	699.	13.33	385.	128.	124.	8.05		
+ +	ROUTED TO	RCD1C	672.	14.25	383.	126.	122.	8.05	993.40	14.25
+	HYDROGRAPH AT	BR67C	67.	12.67	23.	6.	6.	0.13		
+ +	ROUTED TO	RCD1C2	59.	13.08	23.	6.	6.	0.13	996.76	13.08
+	HYDROGRAPH AT	CD1C	552.	12.25	79.	24.	23.	0.46		
+	DIVERSION TO	RET1C	552.	12.58	60.	16.	16.	0.46		
+	HYDROGRAPH AT	CD1R	259.	12.58	27.	8.	8.	0.46		

+	3 COMBINED AT	CPCD1C	742.	13.50	428.	140.	135.	8.64		
+ +	ROUTED TO	RCD2C1	715.	14.42	420.	137.	132.	8.64	987.54	14.42
+	HYDROGRAPH AT	ER55B	205.	12.42	46.	14.	13.	0.26		
+	DIVERSION TO	RET55	205.	13.25	36.	10.	9.	0.26		
+	HYDROGRAPH AT	ER55R	82.	13.25	13.	4.	4.	0.26		
+ +	ROUTED TO	RE59B	55.	13.67	13.	4.	4.	0.26	1021.79	13.67
+	HYDROGRAPH AT	ER59B	274.	12.25	64.	21.	21.	0.26		
+	DIVERSION TO	RET59	274.	12.67	41.	12.	11.	0.26		
+	HYDROGRAPH AT	ER59R	194.	12.67	33.	10.	9.	0.26		
+	2 COMBINED AT	CER59B	194.	12.67	46.	14.	13.	0.51		
+	DIVERSION TO	DIR63B	149.	12.58	18.	4.	4.	0.51		
+	HYDROGRAPH AT	RIR63B	45.	12.58	28.	9.	9.	0.51		
+	HYDROGRAPH AT	IR63B	127.	12.25	30.	10.	10.	0.12		
+	DIVERSION TO	RET63	127.	12.75	20.	6.	5.	0.12		
+	HYDROGRAPH AT	IR63	79.	12.75	16.	5.	4.	0.12		
+	2 COMBINED AT	CIR63C	124.	12.75	43.	14.	13.	0.64		
+ +	ROUTED TO	RIR65C	112.	13.08	43.	14.	13.	0.64	4.31	13.08
+	HYDROGRAPH AT	IR65C	112.	12.33	26.	8.	7.	0.17		
+	DIVERSION TO	RET65C	112.	17.17	26.	7.	7.	0.17		
+	HYDROGRAPH AT	IR65R	2.	17.17	1.	0.	0.	0.17		
+	2 COMBINED AT	CIR65C	112.	13.08	43.	14.	14.	0.81		
+ +	ROUTED TO	RIRDC	92.	13.58	42.	14.	13.	0.81	1012.05	13.58
+	DIVERSION TO	RIR65C	61.	13.33	29.	10.	10.	0.81		
+	HYDROGRAPH AT	DIIRDC	31.	13.33	13.	3.	3.	0.81		
+	HYDROGRAPH AT	IRDC	397.	12.42	110.	36.	34.	0.52		
+	DIVERSION TO	RETRDC	397.	13.17	78.	22.	21.	0.52		
+	HYDROGRAPH AT	IRDR	225.	13.17	47.	14.	13.	0.52		
+	2 COMBINED AT	CIRDC	234.	13.17	60.	17.	17.	1.33		
+ +	ROUTED TO	RIRSMC	219.	13.42	59.	17.	16.	1.33	1001.79	13.42
+	HYDROGRAPH AT	IRSMC	285.	12.17	42.	13.	13.	0.24		

	DIVERSION TO									
+		RETSMC	285.	12.83	36.	10.	9.	0.24		
	HYDROGRAPH AT									
+		IRSMR	74.	12.83	11.	3.	3.	0.24		
	2 COMBINED AT									
+		CIRSMS	243.	13.42	69.	21.	20.	1.58		
	2 COMBINED AT									
+		CIRSMC	872.	13.83	488.	157.	152.	10.21		
	HYDROGRAPH AT									
+		CD2C	337.	12.75	128.	38.	37.	0.60		
	DIVERSION TO									
+		RET2C	337.	13.50	74.	20.	19.	0.60		
	HYDROGRAPH AT									
+		CD2R	262.	13.50	66.	18.	17.	0.60		
	2 COMBINED AT									
+		CCD2C	1081.	13.75	554.	175.	169.	10.81		
	ROUTED TO									
+		RCD3C1	1030.	14.17	546.	171.	165.	10.81		
+									984.00	14.17
	HYDROGRAPH AT									
+		CD4C	165.	12.33	32.	10.	9.	0.19		
	DIVERSION TO									
+		RETD4C	165.	13.00	25.	7.	7.	0.19		
	HYDROGRAPH AT									
+		CD4R	62.	13.00	10.	3.	3.	0.19		
	ROUTED TO									
+		RCD3C2	34.	13.67	10.	3.	3.	0.19		
+									984.81	13.67
	HYDROGRAPH AT									
+		CD3C	428.	12.42	100.	30.	29.	0.48		
	DIVERSION TO									
+		RETD3C	428.	12.83	60.	16.	16.	0.48		
	HYDROGRAPH AT									
+		CD3R	321.	12.83	48.	13.	13.	0.48		
	3 COMBINED AT									
+		CPCD3C	1112.	14.08	584.	187.	180.	11.48		
	HYDROGRAPH AT									
+		A67AC	291.	12.75	111.	34.	33.	0.62		
	DIVERSION TO									
+		RET67A	291.	13.58	70.	19.	19.	0.62		
	HYDROGRAPH AT									
+		A67AR	205.	13.58	53.	15.	14.	0.62		
	ROUTED TO									
+		RCD4C1	137.	14.33	52.	15.	14.	0.62		
+									997.60	14.33

1

SUMMARY OF KINEMATIC WAVE - MUSKINGUM-CUNGE ROUTING
(FLOW IS DIRECT RUNOFF WITHOUT BASE FLOW)

ISTAQ	ELEMENT	DT	PEAK	TIME TO PEAK	VOLUME	INTERPOLATED TO COMPUTATION INTERVAL DT	PEAK	TIME TO PEAK	VOLUME
		(MIN)	(CFS)	(MIN)	(IN)	(MIN)	(CFS)	(MIN)	(IN)
ROA51A	MANE	2.23	20.11	1495.36	0.43	5.00	20.09	1495.00	0.43

CONTINUITY SUMMARY (AC-FT) - INFLOW=0.2132E+02 EXCESS=0.0000E+00 OUTFLOW=0.2118E+02 BASIN STORAGE=0.1293E+00 PERCENT ERROR= 0.1

ROA51B	MANE	2.02	20.12	1496.43	0.43	5.00	20.04	1495.00	0.43

CONTINUITY SUMMARY (AC-FT) - INFLOW=0.2117E+02 EXCESS=0.0000E+00 OUTFLOW=0.2107E+02 BASIN STORAGE=0.1222E+00 PERCENT ERROR= -0.1

RER47B	MANE	4.61	20.00	1498.50	1.32	5.00	20.00	1495.00	1.32

CONTINUITY SUMMARY (AC-FT) - INFLOW=0.2439E+02 EXCESS=0.0000E+00 OUTFLOW=0.2402E+02 BASIN STORAGE=0.4286E+00 PERCENT ERROR= -0.2

RDR51A	MANE	1.43	60.26	1495.64	0.54	5.00	60.15	1495.00	0.54

CONTINUITY SUMMARY (AC-FT) - INFLOW=0.6600E+02 EXCESS=0.0000E+00 OUTFLOW=0.6576E+02 BASIN STORAGE=0.2559E+00 PERCENT ERROR= 0.0

RDR51B	MANE	1.57	303.23	777.74	0.58	5.00	299.25	780.00	0.58

CONTINUITY SUMMARY (AC-FT) - INFLOW=0.8725E+02 EXCESS=0.0000E+00 OUTFLOW=0.8661E+02 BASIN STORAGE=0.7242E+00 PERCENT ERROR= -0.1

DBR51	MANE	1.73	50.22	1495.69	0.34	5.00	50.14	1495.00	0.34

CONTINUITY SUMMARY (AC-FT) - INFLOW=0.5174E+02 EXCESS=0.0000E+00 OUTFLOW=0.5150E+02 BASIN STORAGE=0.2559E+00 PERCENT ERROR= 0.0

*** NORMAL END OF HEC-1 ***

```
1*************************************
 *                                   *
 *   FLOOD HYDROGRAPH PACKAGE  (HEC-1)   *
 *             JUN  1998             *
 *          VERSION 4.1              *
 *                                   *
 *  RUN DATE   27JUN01  TIME  11:36:43   *
 *                                   *
 *************************************
```

```
*************************************
*                                   *
*    U.S. ARMY CORPS OF ENGINEERS     *
*    HYDROLOGIC ENGINEERING CENTER    *
*         609 SECOND STREET           *
*       DAVIS, CALIFORNIA 95616       *
*           (916) 756-1104            *
*                                   *
*************************************
```

```
X     X  XXXXXXX   XXXXX          X
X     X  X        X     X        XX
X     X  X        X              X
XXXXXXX  XXXX     X        XXXXX  X
X     X  X        X              X
X     X  X        X     X        X
X     X  XXXXXXX   XXXXX         XXX
```

THIS PROGRAM REPLACES ALL PREVIOUS VERSIONS OF HEC-1 KNOWN AS HEC1 (JAN 73), HEC1GS, HEC1DB, AND HEC1KW.

THE DEFINITIONS OF VARIABLES -RTIMP- AND -RTIOR- HAVE CHANGED FROM THOSE USED WITH THE 1973-STYLE INPUT STRUCTURE.
THE DEFINITION OF -AMSKK- ON RM-CARD WAS CHANGED WITH REVISIONS DATED 28 SEP 81. THIS IS THE FORTRAN77 VERSION
NEW OPTIONS: DAMBREAK OUTFLOW SUBMERGENCE , SINGLE EVENT DAMAGE CALCULATION, DSS:WRITE STAGE FREQUENCY,
DSS:READ TIME SERIES AT DESIRED CALCULATION INTERVAL LOSS RATE:GREEN AND AMPT INFILTRATION
KINEMATIC WAVE: NEW FINITE DIFFERENCE ALGORITHM

1 HEC-1 INPUT PAGE 1

```
LINE          ID.....1.....2.....3.....4.....5.....6.....7.....8.....9.....10
   1          ID    LAVEEN ADMS (FINAL HEC-1) 100-YR 24-HR STORM          CBA FILE # 40916-02-30
   2          ID    HIDDEN VALLEY WATERSHED/CHAMPION DRAIN WATERSHED
   3          ID    INPUT FILE NAME  HDNVLLY.DAT (FORMERLY CHAMPION24)     DATE: NOVEMBER 2000
   4          ID    FILE NAME CHANGED BY PROJECT ENGINEERING CONSULTANTS, LTD. FOR LAVEEN ADMP
   5          ID    24-HOUR SCS TYPE II RAINFALL
              *DIAGRAM
   6          IT       5                    300
   7          IO       3       0
   8          KK   WC16B
   9          KM   SUB-BASIN WC16B -LAND USE - NATURAL DESERT HILLSLOPES,MINOR DEVELOPMENT
  10          KM   24-HOUR TYPE II RAINFALL WAS USED TO FIND TC & R FOR THIS BASIN
  11          KM   THIS BASIN USED RAINFALL REDUCTION FACTOR OF .97
  12          BA    .023
  13          IN     30
  14          KM   RAINFALL DEPTH OF 4.20 WAS SPACIALLY REDUCED AS SHOWN ON THE PB RECORD
  15          PB   4.074            -
  16          KM   THE FOLLOWING PC RECORDS REPRESENT A 24-HR SCS TYPE II STORM
  17          PC    .000    .005    .011    .016    .022    .028    .035    .041    .048    .056
  18          PC    .068    .071    .080    .089    .098    .109    .120    .133    .147    .163
  19          PC    .181    .204    .235    .283    .663    .735    .772    .799    .820    .838
  20          PC    .854    .868    .880    .891    .902    .912    .921    .929    .937    .945
  21          PC    .952    .959    .965    .972    .978    .984    .989    .995   1.000
  22          LG    .150    .255   7.200    .123    .000
  23          UC    .233    .266
  24          UA       0       3       5       8      12      20      43      75      90      96
  25          UA     100
  26          KK   RRHV1
  27          KM   ROUTE FLOW FROM SUB-BASIN WC16B TO COMPUTATION POINT CPHV1
  28          RS       1    ELEV    1141
  29          RC   0.035   0.040   0.035     540   0.011    1146
  30          RX       0      25      80     120     140     170     240     310
  31          RY    1146    1144    1142    1141    1141    1142    1144    1146
  32          KK   WC17B
  33          KM   SUB-BASIN WC17B -LAND USE - DESERT MOUNTAIN,DESERT HILLS;MINOR DEVELOPMENT
  34          KM   24-HOUR TYPE II RAINFALL WAS USED TO FIND TC & R FOR THIS BASIN
  35          KM   THIS BASIN USED RAINFALL REDUCTION FACTOR OF .97
  36          BA    .035
  37          LG    .150    .276   4.050    .361   5.000
  38          UC    .267    .424
  39          UA       0       3       5       8      12      20      43      75      90      96
  40          UA     100
  41          KK   RRHV2
  42          KM   ROUTE FLOW FROM SUB-BASIN WC17B TP COMPUTATION POINT CPHV1
  43          RS       1    ELEV    1140
  44          RC   0.035   0.040   0.035     230   0.030    1142
  45          RX       0      40      80      90     100     110     150     190
  46          RY    1143    1142    1140    1140    1140    1140    1141    1142
```

1 HEC-1 INPUT PAGE 2

```
LINE          ID.....1.....2.....3.....4.....5.....6.....7.....8.....9.....10
  47          KK   CPHV1
  48          KM   COMBINE ROUTED FLOW FROM SUB-BASINS WC16B AND WC17B
  49          HC       2
  50          KK   RRHV3
  51          KM   ROUTE FLOW FROM COMPUTATION POINT CPHV1 TO COMPUTATION POINT CPHV2(1ST REACH)
  52          RS       1    ELEV    1137
  53          RC   0.035   0.040   0.035     400   0.010    1140
  54          RX       0      30      40      60      70     110     150     180
  55          RY    1141    1140    1138    1137    1137    1138    1139    1140
  56          KK   RRHV4
  57          KM   ROUTE FLOW FROM COMPUTATION POINT CPHV1 TO COMPUTATION POINT CPHV2(2ND REACH)
  58          RS       1    ELEV    1141
  59          RC   0.035   0.040   0.035     400   0.010    1146
  60          RX       0      50     100     130     150     170     220     290
  61          RY    1146    1144    1142    1141    1141    1142    1144    1146
  62          KK   WC18B
  63          KM   SUB-BASIN WC18B -LAND USE - NATURAL DESERT HILLSLOPES,MINOR DEVELOPMENT
  64          KM   24-HOUR TYPE II RAINFALL WAS USED TO FIND TC & R FOR THIS BASIN
  65          KM   THIS BASIN USED RAINFALL REDUCTION FACTOR OF .97
  66          BA    .060
  67          LG    .150    .265   4.100    .236    .000
  68          UC    .300    .338
  69          UA       0       3       5       8      12      20      43      75      90      96
  70          UA     100
  71          KK   RRHV5
  72          KM   ROUTE FLOW FROM SUB-BASIN WC18B TO COMPUTATION POINT CPHV2
  73          RS       1    ELEV    1136
  74          RC   0.035   0.040   0.035     650   0.017    1140
  75          RX       0      60     120     140     160     190     220     240
  76          RY    1140    1139    1138    1136    1136    1138    1139    1140
  77          KK   WC19B
  78          KM   SUB-BASIN WC19B -LAND USE - DESERT MOUNTAIN,DESERT HILLS;MINOR DEVELOPMENT
  79          KM   24-HOUR TYPE II RAINFALL WAS USED TO FIND TC & R FOR THIS BASIN
  80          KM   THIS BASIN USED RAINFALL REDUCTION FACTOR OF .97
  81          BA    .210
  82          LG    .150    .276   3.520    .265  40.000
  83          UC    .217    .162
  84          UA       0       3       5       8      12      20      43      75      90      96
  85          UA     100
  86          KK   RRHV6
  87          KM   ROUTE FLOW FROM SUB-BASIN WC19B TO COMPUTATION POINT CPHV2
  88          RS       1    ELEV    1137
  89          RC   0.035   0.040   0.035     640   0.018    1139
  90          RX       0      10      30      45      60      75     110     140
  91          RY    1139  1138.5    1138    1137    1137    1138    1139    1140
```

1 HEC-1 INPUT PAGE 3

```
LINE          ID.....1.....2.....3.....4.....5.....6.....7.....8.....9.....10
  92          KK    PM3B
  93          KM   SUB-BASIN PM3B -LAND USE - NATURAL DESERT HILLSLOPES,MINOR DEVELOPMENT
  94          KM   24-HOUR TYPE II RAINFALL WAS USED TO FIND TC & R FOR THIS BASIN
  95          KM   THIS BASIN USED RAINFALL REDUCTION FACTOR OF .97
  96          BA    .060
  97          LG    .150    .345   3.100    .946   5.000
  98          UC    .283    .273
  99          UA       0       3       5       8      12      20      43      75      90      96
 100          UA     100
 101          KK   CPHV2
 102          KM   COMBINE ROUTED FLOW FROM CPHV1, WC18B, WC19B WITH RUNOFF FROM SUB-BASIN PM3B
 103          HC       4
 104          KK   RRHV7
 105          KM   ROUTE FLOW FROM COMPUTATION CPHV2 TO COMPUTATION POINT CPHV3
 106          RS       1    ELEV    1126
 107          RC   0.035   0.040   0.035     750   0.011    1130
 108          RX       0      40      90     160     190     210     250     390
 109          RY    1130    1129    1128    1126    1126    1128    1132    1133
 110          KK   WC20B
 111          KM   SUB-BASIN WC20B -LAND USE - NATURAL DESERT HILLSLOPES,MINOR DEVELOPMENT
 112          KM   24-HOUR TYPE II RAINFALL WAS USED TO FIND TC & R FOR THIS BASIN
 113          KM   THIS BASIN USED RAINFALL REDUCTION FACTOR OF .97
 114          BA    .014
 115          LG    .150    .250   8.600    .066    .000
 116          UC    .233    .259
 117          UA       0       3       5       8      12      20      43      75      90      96
 118          UA     100
 119          KK   RRHV8
 120          KM   ROUTE FLOW FROM SUB-BASIN WC20B TO COMPUTATION POINT CPHV3
 121          RS       1    ELEV    1132
 122          RC   0.035   0.035   0.035     850   0.022  1134.5
 123          RX       0      10      20      30      40      60     170     220
 124          RY  1134.5    1134    1133    1132    1132    1134    1134  1134.5
 125          KK   CPHV3
 126          KM   COMBINE ROUTED FLOWS FROM SUB-BASIN WC20B AND  COMPUTATION POINT CPHV3
```

```
127          HC        2

128          KK    RRHV9
129          KM    ROUTE FLOW FROM COMPUTATION CPHV3 TO COMPUTATION POINT CPHV4
130          RS        1    ELEV    1121
131          RC    0.035   0.040   0.035     780   0.008    1126
132          RX        0     100     130     150     165     180     290     350
133          RY     1126    1124    1122    1121    1121    1122    1124    1126
1                                        HEC-1 INPUT                                        PAGE  4

LINE         ID.......1.......2.......3.......4.......5.......6.......7.......8.......9......10


134          KK    WC21B
135          KM    SUB-BASIN WC21B -LAND USE - NATURAL DESERT HILLSLOPES,MINOR DEVELOPMENT
136          KM    24-HOUR TYPE II RAINFALL WAS USED TO FIND TC & R FOR THIS BASIN
137          KM    THIS BASIN USED RAINFALL REDUCTION FACTOR OF .97
138          BA     .024
139          LG     .150    .265   4.100    .236    .000
140          UC     .283    .382
141          UA        0       3       5       8      12      20      43      75      90      96
142          UA      100

143          KK   RRHV10
144          KM    ROUTE FLOW FROM SUB-BASIN WC21B TO COMPUTATION POINT CPHV4
145          RS        2    ELEV    1129
146          RC    0.035   0.035   0.035    1110   0.022    1130
147          RX        0      25      50      75     100     125     175     200
148          RY     1130 1129.75  1129.5    1129    1129  1129.5 1129.75    1130

149          KK     PM4B
150          KM    SUB-BASIN PM4B -LAND USE - NATURAL DESERT HILLSLOPES,MINOR DEVELOPMENT
151          KM    24-HOUR TYPE II RAINFALL WAS USED TO FIND TC & R FOR THIS BASIN
152          KM    THIS BASIN USED RAINFALL REDUCTION FACTOR OF .97
153          BA     .140
154          LG     .150    .327   3.450    .764  15.000
155          UC     .283    .188
156          UA        0       3       5       8      12      20      43      75      90      96
157          UA      100

158          KK    CPHV4
159          KM    COMBINE ROUTED FLOWS FROM SUB-BASINS WC21B PM4B AND  COMPUTATION POINT CPHV4
160          HC        3

161          KK   RRHV11
162          KM    ROUTE FLOW FROM COMPUTATION CPHV4 TO COMPUTATION POINT CPHV5
163          RS        1    ELEV    1116
164          RC    0.035   0.040   0.035     340   0.006    1121
165          RX        0     100     150     170     190     220     280     340
166          RY     1121    1120    1118    1116    1116    1118    1120    1121

167          KK    WC22B
168          KM    SUB-BASIN WC22B -LAND USE - NATURAL DESERT HILLSLOPES,MINOR DEVELOPMENT
169          KM    24-HOUR TYPE II RAINFALL WAS USED TO FIND TC & R FOR THIS BASIN
170          KM    THIS BASIN USED RAINFALL REDUCTION FACTOR OF .97
171          BA     .007
172          LG     .150    .260   5.800    .179    .000
173          UC     .217    .304
174          UA        0       3       5       8      12      20      43      75      90      96
175          UA      100

176          KK   RRHV12
177          KM    ROUTE FLOW FROM SUB-BASIN WC22B TO COMPUTATION POINT CPHV5
178          RS        3    ELEV  1123.5
179          RC    0.035   0.040   0.035    1020   0.023  1124.5
180          RX        0      30      70      90     100     120     135     160
181          RY   1124.5    1124  1123.5  1123.5  1123.5  1123.5    1124  1124.5
1                                        HEC-1 INPUT                                        PAGE  5

LINE         ID.......1.......2.......3.......4.......5.......6.......7.......8.......9......10


182          KK    CPHV5
183          KM    COMBINE ROUTED FLOWS FROM SUB-BASIN WC22B AND  COMPUTATION POINT CPHV4
184          HC        2

185          KK   RRHV13
186          KM    ROUTE FLOW FROM COMPUTATION CPHV5 TO COMPUTATION POINT CPHV6
187          RS        1    ELEV    1114
188          RC    0.035   0.040   0.035     430   0.005    1116
189          RX        0      70     130     160     180     220     340     410
190          RY     1117    1116    1116    1114    1114    1115    1115    1116

191          KK    WC23B
192          KM    SUB-BASIN WC23B -LAND USE - DESERT MOUNTAIN,DESERT HILLS;MINOR DEVELOPMENT
193          KM    24-HOUR TYPE II RAINFALL WAS USED TO FIND TC & R FOR THIS BASIN
194          KM    THIS BASIN USED RAINFALL REDUCTION FACTOR OF .97
195          BA     .400
196          LG     .150    .300   4.120    .253  60.000
197          UC     .300    .247
198          UA        0       3       5       8      12      20      43      75      90      96
199          UA      100

200          KK   RRHV14
201          KM    ROUTE FLOW FROM SUB-BASIN WC23B AND TO COMPUTATION POINT CPHV6
202          RS        1    ELEV    1120
203          RC    0.035   0.035   0.035    1020   0.027  1122.5
204          RX        0      40      80     100     120     140     170     210
205          RY   1122.5    1122  1121.5    1120    1120  1121.5    1122  1122.5

206          KK    CPHV6
207          KM    COMBINE ROUTED FLOWS FROM SUB-BASIN WC23B AND  COMPUTATION POINT CPHV5
208          HC        2

209          KK   RRHV15
210          KM    ROUTE FLOW FROM COMPUTATION CPHV6 TO COMPUTATION POINT CPHV7
211          RS        2    ELEV    1105
212          RC    0.035   0.040   0.035    1980   0.008    1110
213          RX        0     170     430     470     490     530     580     630
214          RY     1110    1106    1106    1105    1105    1106    1108    1110

215          KK     PM5B
216          KM    SUB-BASIN PM5B -LAND USE - NATURAL DESERT HILLSLOPES,MINOR DEVELOPMENT
217          KM    24-HOUR TYPE II RAINFALL WAS USED TO FIND TC & R FOR THIS BASIN
218          KM    THIS BASIN USED RAINFALL REDUCTION FACTOR OF .97
219          BA     .130
220          LG     .150    .310   4.200    .518  15.000
221          UC     .433    .307
222          UA        0       3       5       8      12      20      43      75      90      96
223          UA      100
1                                        HEC-1 INPUT                                        PAGE  6

LINE         ID.......1.......2.......3.......4.......5.......6.......7.......8.......9......10


224          KK    CPHV7
225          KM    COMBINE ROUTED FLOWS FROM SUB-BASIN PM5B AND  COMPUTATION POINT CPHV6
226          HC        2
             *
             *   ***********Proposed Basin to Control Flows From Wash**********************
             *
             *

227          KK   HV7BSN
228          KM    ***************BASIN AT CARVER ROAD AND WASH********************************
229          KM     DETENTION BASIN AT THIS SITE TO ATTENUATE FLOWS INTO THE HIDDEN VALLEY AREA
230          KM     THE BASIN HAS A 20 ACRE TOP AREA AND A 15.9 AC BOTTOM AREA AND 10 FEET DEEP
231          RS        1    ELEV       0
232          SA     15.9    16.7    17.5    18.3    19.1      20
233          SQ        0      20      20      20      20      20
234          SE        0       2       4       6       8      10
             *
             *

235          KK   RRHV16
236          KM    ROUTE OUTFLOW FROM BASIN IN STORM DRAIN TO 47TH AVE. AND ESTRELLA DRIVE
237          KM    THE FLOW DISCHARGES TO SRP DRAIN DITCH
238          RK     5200   .0046    .013            CIRC       3
             *
             * KM ROUTE FLOW FROM COMPUTATION CPHV7 TO COMPUTATION POINT CPHV8
             * RS      1    ELEV    1097
             * RC 0.065   0.065   0.065     400   0.008    1100
             * RX      0     210     315     430     540     640     800     930
             * RY   1100    1098    1098    1097    1097    1098    1099    1100
             *
             *
             *
             *
             *

239          KK   A43A2B
240          KM    SUB-BASIN A43A2B -LAND USE - DESERT MOUNTAIN,DESERT HILLS;MINOR DEVELOPMENT
241          KM    24-HOUR TYPE II RAINFALL WAS USED TO FIND TC & R FOR THIS BASIN
242          KM    THIS BASIN USED RAINFALL REDUCTION FACTOR OF .97
243          BA     .090
244          LG     .150    .279   6.300    .174  30.000
245          UC     .317    .274
246          UA        0       3       5       8      12      20      43      75      90      96
247          UA      100

248          KK   RRHV17
249          KM    ROUTE FLOW FROM SUB-BASIN A43A2B TO COMPUTATION POINT CPHV8
250          RS        1    ELEV    1099
251          RC    0.065   0.065   0.065     440   0.015    1100
252          RX        0     105     135     165     190     210     260     320
253          RY     1100    1099    1099    1099    1099    1099    1099    1100
             *
             *
             *
             *   ************************ COMBINE SKIPPED*********************************
             *
             *
             *
             *  KK CHV8
             *  KM COMBINE ROUTED FLOWS FROM SUB-BASIN A43A2B AND  COMPUTATION POINT CPHV7
             *  HC     2
1                                        HEC-1 INPUT                                        PAGE  7

LINE         ID.......1.......2.......3.......4.......5.......6.......7.......8.......9......10
```

```
KK  RRHV18
KM   ROUTE FLOW FROM COMPUTATION CPHV8 TO COMPUTATION POINT CPHV10
RS       3    ELEV    1086
RC   0.065   0.065   0.065    2200   0.008    1088
RX       0      80     200     300     360     440     550     610
RY    1088    1086    1086    1086    1086    1086    1086    1088

KK  NWSM1B
KM   SUB-BASIN NWSM1B -LAND USE - DESERT MOUNTAIN;UNDEVELOPED
KM   24-HOUR TYPE II RAINFALL WAS USED TO FIND TC & R FOR THIS BASIN
KM   THIS BASIN USED RAINFALL REDUCTION FACTOR OF .97
BA    .130
LG    .150    .345   2.500   1.143  60.000
UC    .267    .226
UA       0       3       5       8      12      20      43      75      90      96
UA     100

KK  RR43B1
KM   ROUTE FLOW FROM SUB-BASIN NWSM1B TO COMPUTATION POINT CPHV9 (1ST REACH)
RS       1    ELEV    1168
RC   0.035   0.040   0.035    1850    0.47    1172
RX       0      40     100     120     135     150     190     240
RY    1172  1171.5    1170    1168    1168    1170  1171.5    1172

KK  RR43B2
KM   ROUTE FLOW FROM SUB-BASIN NWSM1B TO COMPUTATION POINT CPHV9 ( 2ND REACH )
RS       2    ELEV    1118
RC   0.035   0.040   0.035    1000   0.034    1120
RX       0      50     110     410     580     850     970    1160
RY    1120    1119    1119    1118    1118    1118    1119    1120

KK  A43A1B
KM   SUB-BASIN A43A1B -LAND USE - DESERT MOUNTAINS,DESERT HILLS;MINOR DEVELOPMENT
KM   24-HOUR TYPE II RAINFALL WAS USED TO FIND TC & R FOR THIS BASIN
KM   THIS BASIN USED RAINFALL REDUCTION FACTOR OF .97
BA    .170
LG    .150    .285   4.100    .463  15.000
UC    .283    .151
UA       0       3       5       8      12      20      43      75      90      96
UA     100

KK   CPHV9
KM   COMBINE ROUTED FLOW FROM SUB-BASIN NWSM1B WITH RUNOFF FROM SUB-BASIN A43A1B
HC       2
```

1 HEC-1 INPUT PAGE 8

```
LINE  ID.......1.......2.......3.......4.......5.......6.......7.......8.......9......10

KK  RRHV19
KM   ROUTE FLOW FROM COMPUTATION CPHV9 TO COMPUTATION POINT CPHV10
RS       5    ELEV    1091
RC   0.065   0.065   0.065    1700   0.014    1092
RX       0      60     450     530     610     690     830     960
RY    1092    1091    1091    1091    1091    1091    1091    1092

KK   CPHV10
KM   COMBINE ROUTED FLOWS FROM COMPUTATION POINTS CPHV8 AND CPHV9
HC       2

KK  RRHV20
KM       ROUTE FLOW FROM COMPUTATION CPHV10 TO COMPUTATION POINT CPHV11
RS       2    ELEV  1074.5
RC   0.065   0.065   0.065    1100  0.0085    1078
RX       0      90     480     510     520     530     870    1300
RY    1078    1076  1074.5  1074.5  1074.5  1074.5    1076    1078

KK   ED47B
KM   SUB-BASIN ED47B -LAND USE - AGRICULTURE,DESERT MOUNTAIN,DESERT HILLS;MODERATE
KM   DEVELOPMENT
KM   24-HOUR TYPE II RAINFALL WAS USED TO FIND TC & R FOR THIS BASIN
KM   THIS BASIN USED RAINFALL REDUCTION FACTOR OF .97
BA    .810
LG    .330    .094   4.100    .629  10.000
UC    .283    .114
UA       0       3       5       8      12      20      43      75      90      96
UA     100

KK   CPHV11
KM   COMBINE ROUTED FLOWS FROM COMPUTATION POINT CPHV10 TO RUNOFF FROM SUB-BASIN
KM   ED47B
HC       3

KK  DFED47
KM   RATE CHANNEL CROSSECTION AT COMPUTATION POINT ED47B FOR SPLIT FLOW
KM   DIVERTED FLOW IS ROUTED THROUGH SUB BASIN IR55B
DT  DIR55B
DI       0     139     558    1324    2507
DQ       0      20     126     372     801

KK  RRHV21
KM   ROUTE FLOW FROM COMPUTATION POINT CPHV11 TO COMPUTATION POINT CPHV12
KM   (1ST REACH)
RS     .  5    ELEV  1059.5
RC   0.015   0.065   0.065    2660   0.006  1060.7
RX       0      30      60     150     180     600     660     690
RY  1060.7  1060.0    1060    1060  1059.5  1059.5    1060  1060.7

KK  RRHV22
KM   ROUTE FLOW FROM COMPUTATION POINT CPHV11 TO COMPUTATION POINT CPHV12
KM    (2ND REACH)
RS       7    ELEV  1039.5
RC     .07     .07     .07    2724   0.007  1040.1
RX       0     230     700     701    1260    1261    1480    1520
RY  1040.1    1039  1039.5  1039.5  1039.5  1039.5    1040  1040.1
```

1 HEC-1 INPUT PAGE 9

```
LINE  ID.......1.......2.......3.......4.......5.......6.......7.......8.......9......10

KK   IR59B
KM   SUB-BASIN IR59B -LAND USE - AGRICULTURE; MINOR DEVELOPMENT
KM   24-HOUR TYPE II RAINFALL WAS USED TO FIND TC & R FOR THIS BASIN
KM   THIS BASIN USED RAINFALL REDUCTION FACTOR OF .97
BA    .660
LG    .500    .000   3.990    .636    .000
UC    .883    .610
UA       0     1.6       5    10.6    19.5      32      44      56      70      82
UA     100

KK  CPHV12
KM    COMBINE ROUTED FLOW FROM COMPUTATION POINT CPHV11 TO RUNOFF FROM SUB-BASIN
KM    IR59B
HC       2

KK  DIHV12
KM    THE WESTERN EDGE OF SUB-BASIN IR59B WHICH IS ALSO THE WESTERN EDGE OF THE
KM    STUDY AREA IS BOUNDED  BY A CONCRETE IRRIGATION CANAL AND EARTHEN ROADWAY
KM    THE EARTHEN ROADWAY HAS A CAPACITY TO CONVEY  APPROXIMATELY 65 CFS TO THE
KM    NORTH WEST BEFORE THE CONCRETE IRRIGATION CANAL IS OVERTOPPED AND FLOW
KM    CONTINUES TO DRAIN TO THE WEST. THEREFORE APPROXIMATELY 65 CFS WILL
KM    CONCENTRATE AT COMPUTATION POINT CPHV12. AT COMPUTATION POINT CPHV12
KM    A DIP SECTION IN THE EARTHEN ROADWAY WILL DRAIN APPROXIMATELY 684 CFS
KM    TO THE WEST. ALL OF THE FLOW CONCENTRATED AT COMPUTATION CPHV12 PASSES
KM    OUT OF THE STUDY AREA.
DT  RCHV12
DI       0     100     200     400     600     800     900    1000    1200    1400
DQ       0     100     200     400     600     800     900    1000    1200    1400

KK  REED47
KM   RETRIVE DIVERTED FLOW FROM COMPUTATION POINT CPHV11
DR  DIR55B

KK  RRHV23
KM   ROUTE DIVERTED FLOW FROM COMPUTATION POINT CPHV11 THROUGH SUB-BASIN IR55B
RS      19    ELEV    1061
RC    0.07    0.07    0.07    4800   0.006
RX       0     240     470     620     830    1200    1520    1740
RY    1062    1061    1061    1061    1061    1061    1061    1062

KK   IR55B
KM   SUB-BASIN IR55B -LAND USE - AGRICULTURE;MINOR DEVELOPMENT
KM   24-HOUR TYPE II RAINFALL WAS USED TO FIND TC & R FOR THIS BASIN
KM   THIS BASIN USED RAINFALL REDUCTION FACTOR OF .97
BA    .530
LG    .480    .079   3.650    .502   5.000
UC    .850    .554
UA       0       3       5       8      12      20      43      75      90      96
UA     100
```

1 HEC-1 INPUT PAGE 10

```
LINE  ID.......1.......2.......3.......4.......5.......6.......7.......8.......9......10

KK  CIR55B
KM    COMBINE ROUTED DIVERTED FLOW FROM COMPUTATION POINT CPHV11 WITH RUNOFF FROM
KM    SUB-BASIN IR55B
HC       2

KK  DIR55B
KM    THE WESTERN EDGE OF SUB-BASIN IR55B WHICH IS ALSO THE WESTERN EDGE OF THE
KM    STUDY AREA IS BOUNDED BY AN EARTHEN IRRIGATION CANAL. MINOR CONTAINMENT OF
KM    RUNOFF AND ROUTED FLOW WILL BE REALIZED. THEREFORE TOTAL FLOW AT COMPUTATION
KM    POINT CIR55B IS DIVERTED BECAUSE FLOW FROM THIS POINT DOES NOT CONTRIBUTE
KM    TO RUNOFF COMPUTATIONS DOWNSTREAM.
DT  RCIREB
DI       0     100     200     400     600     800
DQ       0     100     200     400     600     800
ZZ
```

1 SCHEMATIC DIAGRAM OF STREAM NETWORK

```
INPUT
 LINE     (V) ROUTING          (---->) DIVERSION OR PUMP FLOW

  NO.     (.) CONNECTOR        (<----) RETURN OF DIVERTED OR PUMPED FLOW

    8      WC16B
           V
           V
```

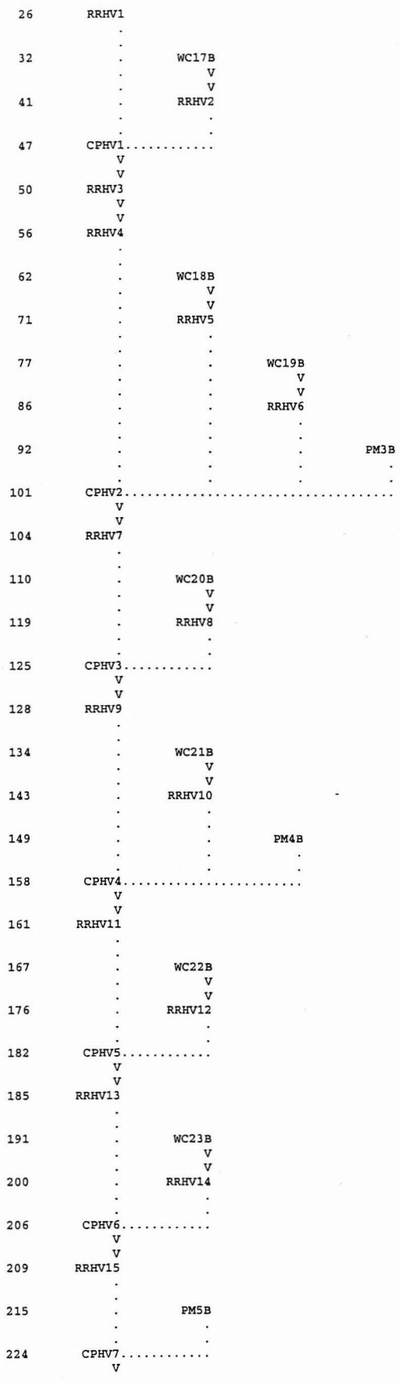

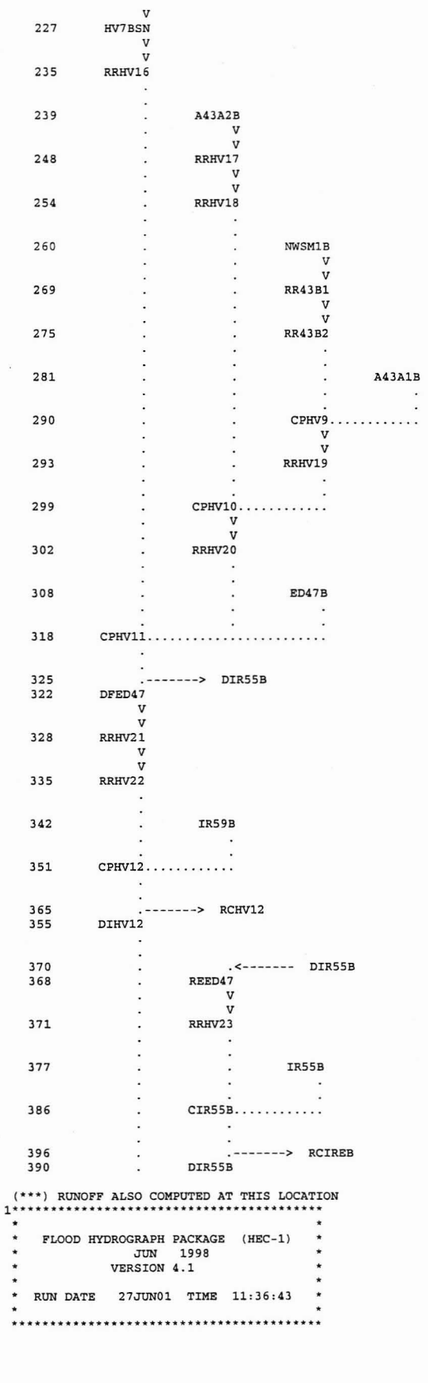

(***) RUNOFF ALSO COMPUTED AT THIS LOCATION

```
1*****************************************
*                                       *
*   FLOOD HYDROGRAPH PACKAGE  (HEC-1)   *
*             JUN  1998                 *
*           VERSION 4.1                 *
*                                       *
*  RUN DATE   27JUN01  TIME  11:36:43   *
*                                       *
*****************************************
```

```
*************************************
*                                   *
*    U.S. ARMY CORPS OF ENGINEERS   *
*    HYDROLOGIC ENGINEERING CENTER  *
*          609 SECOND STREET        *
*       DAVIS, CALIFORNIA 95616     *
*           (916) 756-1104          *
*                                   *
*************************************
```

LAVEEN ADMS (FINAL HEC-1) 100-YR 24-HR STORM   CBA FILE # 40916-02-30
HIDDEN VALLEY WATERSHED/CHAMPION DRAIN WATERSHED
INPUT FILE NAME HDNVLLY.DAT (FORMERLY CHAMPION24)   DATE: NOVEMBER 2000
FILE NAME CHANGED BY PROJECT ENGINEERING CONSULTANTS, LTD. FOR LAVEEN ADMP
24-HOUR SCS TYPE II RAINFALL

7 IO OUTPUT CONTROL VARIABLES

IPRNT	3	PRINT CONTROL	
IPLOT	0	PLOT CONTROL	
QSCAL	0.	HYDROGRAPH PLOT SCALE	

IT HYDROGRAPH TIME DATA

NMIN		5	MINUTES IN COMPUTATION INTERVAL
IDATE	1	0	STARTING DATE
ITIME		0000	STARTING TIME
NQ		300	NUMBER OF HYDROGRAPH ORDINATES
NDDATE	2	0	ENDING DATE
NDTIME		0055	ENDING TIME
ICENT		19	CENTURY MARK

COMPUTATION INTERVAL .08 HOURS
TOTAL TIME BASE 24.92 HOURS

ENGLISH UNITS

DRAINAGE AREA	SQUARE MILES
PRECIPITATION DEPTH	INCHES
LENGTH, ELEVATION	FEET
FLOW	CUBIC FEET PER SECOND
STORAGE VOLUME	ACRE-FEET
SURFACE AREA	ACRES
TEMPERATURE	DEGREES FAHRENHEIT

*** ***

```
              **************
              *            *
8 KK          *   WC16B    *
              *            *
              **************
```

SUB-BASIN WC16B -LAND USE - NATURAL DESERT HILLSLOPES,MINOR DEVELOPMENT
24-HOUR TYPE II RAINFALL WAS USED TO FIND TC & R FOR THIS BASIN
THIS BASIN USED RAINFALL REDUCTION FACTOR OF .97
RAINFALL DEPTH OF 4.20 WAS SPACIALLY REDUCED AS SHOWN ON THE PB RECORD
THE FOLLOWING PC RECORDS REPRESENT A 24-HR SCS TYPE II STORM

13 IN TIME DATA FOR INPUT TIME SERIES

JXMIN		30	TIME INTERVAL IN MINUTES
JXDATE	1	0	STARTING DATE
JXTIME		0	STARTING TIME

SUBBASIN RUNOFF DATA

12 BA SUBBASIN CHARACTERISTICS
TAREA .02 SUBBASIN AREA

PRECIPITATION DATA

16 PB STORM 4.07 BASIN TOTAL PRECIPITATION

16 PI INCREMENTAL PRECIPITATION PATTERN

.00	.00	.00	.00	.00	.00	.00	.00	.00	.00
.00	.00	.00	.00	.00	.00	.00	.00	.00	.00
.00	.00	.00	.00	.00	.00	.00	.00	.00	.00
.00	.00	.00	.00	.00	.00	.00	.00	.00	.00
.00	.00	.00	.00	.00	.00	.00	.00	.00	.00
.00	.00	.00	.00	.00	.00	.00	.00	.00	.00
.00	.00	.00	.00	.00	.00	.00	.00	.00	.00
.00	.00	.00	.00	.00	.00	.00	.00	.00	.00
.00	.00	.00	.00	.00	.00	.00	.00	.00	.00
.00	.00	.00	.00	.00	.00	.00	.00	.00	.00
.00	.00	.00	.00	.00	.00	.00	.00	.00	.00
.00	.00	.00	.00	.00	.00	.00	.00	.00	.00
.00	.00	.00	.00	.00	.00	.01	.01	.01	.01
.01	.01	.01	.01	.01	.01	.01	.01	.06	.06
.06	.06	.06	.06	.01	.01	.01	.01	.01	.01
.01	.01	.01	.01	.01	.01	.00	.00	.00	.00
.00	.00	.00	.00	.00	.00	.00	.00	.00	.00
.00	.00	.00	.00	.00	.00	.00	.00	.00	.00
.00	.00	.00	.00	.00	.00	.00	.00	.00	.00
.00	.00	.00	.00	.00	.00	.00	.00	.00	.00
.00	.00	.00	.00	.00	.00	.00	.00	.00	.00
.00	.00	.00	.00	.00	.00	.00	.00	.00	.00
.00	.00	.00	.00	.00	.00	.00	.00	.00	.00
.00	.00	.00	.00	.00	.00	.00	.00	.00	.00
.00	.00	.00	.00	.00	.00	.00	.00	.00	.00
.00	.00	.00	.00	.00	.00	.00	.00	.00	.00
.00	.00	.00	.00	.00	.00	.00	.00	.00	.00
.00	.00	.00	.00	.00	.00	.00	.00	.00	.00
.00	.00	.00	.00	.00	.00	.00	.00		

22 LG GREEN AND AMPT LOSS RATE

STRTL	.15	STARTING LOSS
DTH	.25	MOISTURE DEFICIT
PSIF	7.20	WETTING FRONT SUCTION
XKSAT	.12	HYDRAULIC CONDUCTIVITY
RTIMP	.00	PERCENT IMPERVIOUS AREA

23 UC CLARK UNITGRAPH

TC	.23	TIME OF CONCENTRATION
R	.27	STORAGE COEFFICIENT

24 UA ACCUMULATED-AREA VS. TIME, 11 ORDINATES

.0	3.0	5.0	8.0	12.0	20.0	43.0	75.0	90.0	96.0
100.0									

***

UNIT HYDROGRAPH PARAMETERS
CLARK TC= .23 HR, R= .27 HR
SNYDER TP= .23 HR, CP= .59

UNIT HYDROGRAPH
19 END-OF-PERIOD ORDINATES

2.	20.	37.	32.	23.	17.	12.	9.	7.	5.
4.	3.	2.	1.	1.	1.	1.	0.	0.	

*** *** *** *** ***

HYDROGRAPH AT STATION WC16B

TOTAL RAINFALL = 4.07, TOTAL LOSS = 2.54, TOTAL EXCESS = 1.54

	PEAK FLOW	TIME		MAXIMUM AVERAGE FLOW			
				6-HR	24-HR	72-HR	24.92-HR
+	(CFS)	(HR)					
			(CFS)				
+	33.	12.08		4.	1.	1.	1.
			(INCHES)	1.532	1.532	1.532	1.532
			(AC-FT)	2.	2.	2.	2.

CUMULATIVE AREA = .02 SQ MI

*** ***

```
              **************
              *            *
26 KK         *   RRHV1    *
              *            *
              **************
```

ROUTE FLOW FROM SUB-BASIN WC16B TO COMPUTATION POINT CPHV1

HYDROGRAPH ROUTING DATA

28 RS STORAGE ROUTING

NSTPS	1	NUMBER OF SUBREACHES
ITYP	ELEV	TYPE OF INITIAL CONDITION
RSVRIC	1141.00	INITIAL CONDITION
X	.00	WORKING R AND D COEFFICIENT

29 RC NORMAL DEPTH CHANNEL

ANL	.035	LEFT OVERBANK N-VALUE
ANCH	.040	MAIN CHANNEL N-VALUE
ANR	.035	RIGHT OVERBANK N-VALUE
RLNTH	540.	REACH LENGTH
SEL	.0110	ENERGY SLOPE
ELMAX	1146.0	MAX. ELEV. FOR STORAGE/OUTFLOW CALCULATION

CROSS-SECTION DATA

		--- LEFT OVERBANK ---	+	------ MAIN CHANNEL	-------	+	--- RIGHT OVERBANK ---		
31 RY	ELEVATION	1146.00	1144.00	1142.00	1141.00	1141.00	1142.00	1144.00	1146.00
30 RX	DISTANCE	.00	25.00	80.00	120.00	140.00	170.00	240.00	310.00

***

COMPUTED STORAGE-OUTFLOW-ELEVATION DATA

STORAGE	.00	.10	.25	.47	.74	1.07	1.46	1.90	2.39	2.93
OUTFLOW	.00	10.27	39.67	92.50	177.62	313.90	490.38	711.16	979.93	1300.20
ELEVATION	1141.00	1141.26	1141.53	1141.79	1142.05	1142.32	1142.58	1142.84	1143.11	1143.37
STORAGE	3.53	4.19	4.89	5.64	6.43	7.25	8.12	9.03	9.98	10.97
OUTFLOW	1675.36	2108.67	2610.08	3178.47	3810.58	4508.01	5272.46	6105.65	7009.32	7985.47
ELEVATION	1143.63	1143.90	1144.16	1144.42	1144.68	1144.95	1145.21	1145.47	1145.74	1146.00

*** WARNING *** MODIFIED PULS ROUTING MAY BE NUMERICALLY UNSTABLE FOR OUTFLOWS BETWEEN 93. TO 7985.
THE ROUTED HYDROGRAPH SHOULD BE EXAMINED FOR OSCILLATIONS OR OUTFLOWS GREATER THAN PEAK INFLOWS.
THIS CAN BE CORRECTED BY DECREASING THE TIME INTERVAL OR INCREASING STORAGE (USE A LONGER REACH.)

*** *** *** *** ***

```
                              HYDROGRAPH AT STATION     RRHV1

   PEAK FLOW       TIME                               MAXIMUM AVERAGE FLOW
                                          6-HR        24-HR        72-HR      24.92-HR
 +   (CFS)         (HR)
                              (CFS)
 +       32.      12.17                     4.           1.           1.            1.
                            (INCHES)     1.532        1.532        1.532         1.532
                             (AC-FT)        2.           2.           2.            2.

  PEAK STORAGE     TIME                             MAXIMUM AVERAGE STORAGE
                                          6-HR        24-HR        72-HR      24.92-HR
 +  (AC-FT)        (HR)
         0.       12.17                     0.           0.           0.            0.

   PEAK STAGE      TIME                              MAXIMUM AVERAGE STAGE
                                          6-HR        24-HR        72-HR      24.92-HR
 +   (FEET)        (HR)
    1141.45       12.17                1141.07      1141.02      1141.02       1141.02

                             CUMULATIVE AREA =       .02 SQ MI

*** *** *** *** *** *** *** *** *** *** *** *** *** *** *** *** *** *** *** *** *** *** *** *** *** *** *** *** *** *** *** *** *** ***

               **************
               *            *
   32 KK       *    WC17B   *
               *            *
               **************
                             SUB-BASIN WC17B -LAND USE - DESERT MOUNTAIN,DESERT HILLS;MINOR DEVELOPMENT
                             24-HOUR TYPE II RAINFALL WAS USED TO FIND TC & R FOR THIS BASIN
                             THIS BASIN USED RAINFALL REDUCTION FACTOR OF .97

                   SUBBASIN RUNOFF DATA

   36 BA             SUBBASIN CHARACTERISTICS
                           TAREA          .04   SUBBASIN AREA

                     PRECIPITATION DATA

   16 PB                   STORM         4.07   BASIN TOTAL PRECIPITATION

   16 PI               INCREMENTAL PRECIPITATION PATTERN
                           .00      .00      .00      .00      .00      .00      .00      .00      .00      .00
                           .00      .00      .00      .00      .00      .00      .00      .00      .00      .00
                           .00      .00      .00      .00      .00      .00      .00      .00      .00      .00
                           .00      .00      .00      .00      .00      .00      .00      .00      .00      .00
                           .00      .00      .00      .00      .00      .00      .00      .00      .00      .00
                           .00      .00      .00      .00      .00      .00      .00      .00      .00      .00
                           .00      .00      .00      .00      .00      .00      .00      .00      .00      .00
                           .00      .00      .00      .00      .00      .00      .00      .00      .00      .00
                           .00      .00      .00      .00      .00      .00      .00      .00      .00      .00
                           .00      .00      .00      .00      .00      .00      .00      .00      .00      .00
                           .00      .00      .00      .00      .00      .00      .00      .00      .00      .00
                           .00      .00      .00      .00      .00      .00      .00      .00      .00      .00
                           .00      .00      .00      .00      .00      .00      .01      .01      .01      .01
                           .01      .01      .01      .01      .01      .01      .01      .01      .06      .06
                           .06      .06      .06      .06      .01      .01      .01      .01      .01      .01
                           .01      .01      .01      .01      .01      .01      .00      .00      .00      .00
                           .00      .00      .00      .00      .00      .00      .00      .00      .00      .00
                           .00      .00      .00      .00      .00      .00      .00      .00      .00      .00
                           .00      .00      .00      .00      .00      .00      .00      .00      .00      .00
                           .00      .00      .00      .00      .00      .00      .00      .00      .00      .00
                           .00      .00      .00      .00      .00      .00      .00      .00      .00      .00
                           .00      .00      .00      .00      .00      .00      .00      .00      .00      .00
                           .00      .00      .00      .00      .00      .00      .00      .00      .00      .00
                           .00      .00      .00      .00      .00      .00      .00      .00      .00      .00
                           .00      .00      .00      .00      .00      .00      .00      .00      .00      .00
                           .00      .00      .00      .00      .00      .00      .00      .00      .00      .00
                           .00      .00      .00      .00      .00      .00      .00      .00      .00      .00
                           .00      .00      .00      .00      .00      .00      .00      .00      .00      .00
                           .00      .00      .00      .00      .00      .00      .00      .00

   37 LG             GREEN AND AMPT LOSS RATE
                          STRTL           .15   STARTING LOSS
                            DTH           .28   MOISTURE DEFICIT
                           PSIF          4.05   WETTING FRONT SUCTION
                          XKSAT           .36   HYDRAULIC CONDUCTIVITY
                          RTIMP          5.00   PERCENT IMPERVIOUS AREA

   38 UC             CLARK UNITGRAPH
                             TC           .27   TIME OF CONCENTRATION
                              R           .42   STORAGE COEFFICIENT

   39 UA             ACCUMULATED-AREA VS. TIME,  11 ORDINATES
                           .0       3.0       5.0       8.0      12.0      20.0      43.0      75.0      90.0      96.0
                        100.0

                                                         ***

                                              UNIT HYDROGRAPH PARAMETERS
                                                  CLARK    TC=    .27 HR,        R=    .42 HR
                                                  SNYDER   TP=    .28 HR,       CP=    .50

                                                             UNIT HYDROGRAPH
                                                       29 END-OF-PERIOD ORDINATES
                 2.        14.        33.        39.        33.        27.        22.        18.        15.        12.
                10.         8.         7.         6.         5.         4.         3.         3.         2.         2.
                 1.         1.         1.         1.         1.         1.         0.         0.         0.

     ***            ***            ***            ***            ***

                         HYDROGRAPH AT STATION     WC17B

    TOTAL RAINFALL =     4.07, TOTAL LOSS =     2.73, TOTAL EXCESS =     1.34

   PEAK FLOW       TIME                               MAXIMUM AVERAGE FLOW
                                          6-HR        24-HR        72-HR      24.92-HR
 +   (CFS)         (HR)
                              (CFS)
 +       35.      12.17                     5.           1.           1.            1.
                            (INCHES)     1.274        1.333        1.333         1.333
                             (AC-FT)        2.           2.           2.            2.

                             CUMULATIVE AREA =       .04 SQ MI

*** *** *** *** *** *** *** *** *** *** *** *** *** *** *** *** *** *** *** *** *** *** *** *** *** *** *** *** *** *** *** *** *** ***

               **************
               *            *
   41 KK       *    RRHV2   *
               *            *
               **************
                             ROUTE FLOW FROM SUB-BASIN WC17B TP COMPUTATION POINT CPHV1

                   HYDROGRAPH ROUTING DATA

   43 RS             STORAGE ROUTING
                          NSTPS             1   NUMBER OF SUBREACHES
                           ITYP          ELEV   TYPE OF INITIAL CONDITION
                         RSVRIC       1140.00   INITIAL CONDITION
                              X           .00   WORKING R AND D COEFFICIENT

   44 RC             NORMAL DEPTH CHANNEL
                            ANL          .035   LEFT OVERBANK N-VALUE
                           ANCH          .040   MAIN CHANNEL N-VALUE
                            ANR          .035   RIGHT OVERBANK N-VALUE
                          RLNTH          230.   REACH LENGTH
                            SEL         .0300   ENERGY SLOPE
                          ELMAX        1142.0   MAX. ELEV. FOR STORAGE/OUTFLOW CALCULATION

                                                CROSS-SECTION DATA
                              --- LEFT OVERBANK --- + ------ MAIN CHANNEL ------- + --- RIGHT OVERBANK ---
   46 RY        ELEVATION   1143.00   1142.00   1140.00   1140.00   1140.00   1140.00   1141.00   1142.00
   45 RX         DISTANCE       .00     40.00     80.00     90.00    100.00    110.00    150.00    190.00

                                                       ***

                                          COMPUTED STORAGE-OUTFLOW-ELEVATION DATA

               STORAGE        .00        .02        .04        .07        .09        .13        .16        .20        .25        .29
               OUTFLOW        .00       4.88      16.59      34.76      59.61      91.50     130.80     177.92     233.26     297.24
             ELEVATION    1140.00    1140.11    1140.21    1140.32    1140.42    1140.53    1140.63    1140.74    1140.84    1140.95

               STORAGE        .34        .40        .45        .51        .58        .64        .72        .79        .87        .95
               OUTFLOW     370.26     452.71     544.98     647.46     760.53     884.57    1019.95    1167.03    1326.17    1497.73
             ELEVATION    1141.05    1141.16    1141.26    1141.37    1141.47    1141.58    1141.68    1141.79    1141.89    1142.00

*** WARNING *** MODIFIED PULS ROUTING MAY BE NUMERICALLY UNSTABLE FOR OUTFLOWS BETWEEN          5. TO      1498.
                THE ROUTED HYDROGRAPH SHOULD BE EXAMINED FOR OSCILLATIONS OR OUTFLOWS GREATER THAN PEAK INFLOWS.
                THIS CAN BE CORRECTED BY DECREASING THE TIME INTERVAL OR INCREASING STORAGE (USE A LONGER REACH.)

     ***            ***            ***            ***            ***

                         HYDROGRAPH AT STATION     RRHV2

   PEAK FLOW       TIME                               MAXIMUM AVERAGE FLOW
                                          6-HR        24-HR        72-HR      24.92-HR
 +   (CFS)         (HR)
                              (CFS)
 +       35.      12.17                     5.           1.           1.            1.
                            (INCHES)     1.274        1.333        1.333         1.333
                             (AC-FT)        2.           2.           2.            2.

  PEAK STORAGE     TIME                             MAXIMUM AVERAGE STORAGE
                                          6-HR        24-HR        72-HR      24.92-HR
 +  (AC-FT)        (HR)
         0.       12.17                     0.           0.           0.            0.

   PEAK STAGE      TIME                              MAXIMUM AVERAGE STAGE
                                          6-HR        24-HR        72-HR      24.92-HR
```

```
+   (FEET)      (HR)
    1140.32     12.17              1140.06     1140.01     1140.01     1140.01

                          CUMULATIVE AREA =     .04 SQ MI



 *** *** *** *** *** *** *** *** *** *** *** *** *** *** *** *** *** *** *** *** *** *** *** *** *** *** *** *** *** *** *** *** ***


            **************
            *            *
   47 KK    *     CPHV1  *
            *            *
            **************
                        COMBINE ROUTED FLOW FROM SUB-BASINS WC16B AND WC17B

   49 HC          HYDROGRAPH COMBINATION
                       ICOMP           2  NUMBER OF HYDROGRAPHS TO COMBINE
                                                                    ***

       ***             ***             ***             ***             ***

                        HYDROGRAPH AT STATION    CPHV1

  PEAK FLOW     TIME                          MAXIMUM AVERAGE FLOW
                                    6-HR        24-HR       72-HR      24.92-HR
+   (CFS)       (HR)
                  (CFS)
+      67.      12.17                9.          2.          2.          2.
                (INCHES)          1.376       1.412       1.412       1.412
                (AC-FT)             4.          4.          4.          4.

                          CUMULATIVE AREA =     .06 SQ MI



 *** *** *** *** *** *** *** *** *** *** *** *** *** *** *** *** *** *** *** *** *** *** *** *** *** *** *** *** *** *** *** *** ***


            **************
            *            *
   50 KK    *     RRHV3  *
            *            *
            **************
                        ROUTE FLOW FROM COMPUTATION POINT CPHV1 TO COMPUTATION POINT CPHV2(1ST REACH)

                      HYDROGRAPH ROUTING DATA

   52 RS              STORAGE ROUTING
                           NSTPS           1  NUMBER OF SUBREACHES
                            ITYP        ELEV  TYPE OF INITIAL CONDITION
                          RSVRIC     1137.00  INITIAL CONDITION
                               X         .00 WORKING R AND D COEFFICIENT

   53 RC              NORMAL DEPTH CHANNEL
                            ANL        .035  LEFT OVERBANK N-VALUE
                           ANCH        .040  MAIN CHANNEL N-VALUE
                            ANR        .035  RIGHT OVERBANK N-VALUE
                          RLNTH        400.  REACH LENGTH
                            SEL       .0100  ENERGY SLOPE
                          ELMAX      1140.0  MAX. ELEV. FOR STORAGE/OUTFLOW CALCULATION

                                    CROSS-SECTION DATA
                              --- LEFT OVERBANK --- + ------ MAIN CHANNEL ------- + --- RIGHT OVERBANK ---
   55 RY        ELEVATION   1141.00   1140.00   1138.00   1137.00   1137.00   1138.00   1139.00   1140.00
   54 RX        DISTANCE        .00     30.00     40.00     60.00     70.00    110.00    150.00    180.00

                                               ***

                                COMPUTED STORAGE-OUTFLOW-ELEVATION DATA

          STORAGE        .00       .02       .06       .11       .17       .24       .33       .44       .55       .67
          OUTFLOW        .00      2.10      8.15     19.06     35.80     59.26     90.31    135.96    194.36    263.15
        ELEVATION    1137.00   1137.16   1137.32   1137.47   1137.63   1137.79   1137.95   1138.10   1138.26   1138.42

          STORAGE        .81       .95      1.11      1.27      1.45      1.63      1.82      2.01      2.22      2.43
          OUTFLOW     342.92    434.20    537.52    653.83    783.80    926.68   1082.75   1252.27   1435.54   1632.85
        ELEVATION    1138.58   1138.74   1138.89   1139.05   1139.21   1139.37   1139.53   1139.68   1139.84   1140.00

 *** WARNING *** MODIFIED PULS ROUTING MAY BE NUMERICALLY UNSTABLE FOR OUTFLOWS BETWEEN       36. TO     1633.
                 THE ROUTED HYDROGRAPH SHOULD BE EXAMINED FOR OSCILLATIONS OR OUTFLOWS GREATER THAN PEAK INFLOWS.
                 THIS CAN BE CORRECTED BY DECREASING THE TIME INTERVAL OR INCREASING STORAGE (USE A LONGER REACH.)

      ***             ***             ***             ***             ***

                        HYDROGRAPH AT STATION    RRHV3

  PEAK FLOW     TIME                          MAXIMUM AVERAGE FLOW
                                    6-HR        24-HR       72-HR      24.92-HR
+   (CFS)       (HR)
                  (CFS)
+      66.      12.17                9.          2.          2.          2.
                (INCHES)          1.376       1.412       1.412       1.412
                (AC-FT)             4.          4.          4.          4.

  PEAK STORAGE  TIME                          MAXIMUM AVERAGE STORAGE
                                    6-HR        24-HR       72-HR      24.92-HR
+   (AC-FT)     (HR)
        0.      12.17                0.          0.          0.          0.

  PEAK STAGE    TIME                          MAXIMUM AVERAGE STAGE
                                    6-HR        24-HR       72-HR      24.92-HR
+   (FEET)      (HR)
   1137.82      12.17             1137.18     1137.05     1137.05     1137.05

                          CUMULATIVE AREA =     .06 SQ MI



 *** *** *** *** *** *** *** *** *** *** *** *** *** *** *** *** *** *** *** *** *** *** *** *** *** *** *** *** *** *** *** *** ***


            **************
            *            *
   56 KK    *     RRHV4  *
            *            *
            **************
                        ROUTE FLOW FROM COMPUTATION POINT CPHV1 TO COMPUTATION POINT CPHV2(2ND REACH)

                      HYDROGRAPH ROUTING DATA

   58 RS              STORAGE ROUTING
                           NSTPS           1  NUMBER OF SUBREACHES
                            ITYP        ELEV  TYPE OF INITIAL CONDITION
                          RSVRIC     1141.00  INITIAL CONDITION
                               X         .00 WORKING R AND D COEFFICIENT

   59 RC              NORMAL DEPTH CHANNEL
                            ANL        .035  LEFT OVERBANK N-VALUE
                           ANCH        .040  MAIN CHANNEL N-VALUE
                            ANR        .035  RIGHT OVERBANK N-VALUE
                          RLNTH        400.  REACH LENGTH
                            SEL       .0100  ENERGY SLOPE
                          ELMAX      1146.0  MAX. ELEV. FOR STORAGE/OUTFLOW CALCULATION

                                    CROSS-SECTION DATA
                              --- LEFT OVERBANK --- + ------ MAIN CHANNEL ------- + --- RIGHT OVERBANK ---
   61 RY        ELEVATION   1146.00   1144.00   1142.00   1141.00   1141.00   1142.00   1144.00   1146.00
   60 RX        DISTANCE        .00     50.00    100.00    130.00    150.00    170.00    220.00    290.00

                                               ***

                                COMPUTED STORAGE-OUTFLOW-ELEVATION DATA

          STORAGE        .00       .06       .16       .29       .45       .64       .86      1.12      1.40      1.72
          OUTFLOW        .00      9.23     33.91     76.28    142.36    246.09    379.65    546.29    748.89    990.19
        ELEVATION    1141.00   1141.26   1141.53   1141.79   1142.05   1142.32   1142.58   1142.84   1143.11   1143.37

          STORAGE       2.07      2.46      2.87      3.32      3.81      4.34      4.91      5.52      6.16      6.84
          OUTFLOW    1272.80   1599.25   1967.95   2384.76   2855.75   3383.80   3971.76   4622.41   5338.49   6122.91
        ELEVATION    1143.63   1143.90   1144.16   1144.42   1144.68   1144.95   1145.21   1145.47   1145.74   1146.00

 *** WARNING *** MODIFIED PULS ROUTING MAY BE NUMERICALLY UNSTABLE FOR OUTFLOWS BETWEEN       34. TO     6123.
                 THE ROUTED HYDROGRAPH SHOULD BE EXAMINED FOR OSCILLATIONS OR OUTFLOWS GREATER THAN PEAK INFLOWS.
                 THIS CAN BE CORRECTED BY DECREASING THE TIME INTERVAL OR INCREASING STORAGE (USE A LONGER REACH.)

      ***             ***             ***             ***             ***

                        HYDROGRAPH AT STATION    RRHV4

  PEAK FLOW     TIME                          MAXIMUM AVERAGE FLOW
                                    6-HR        24-HR       72-HR      24.92-HR
+   (CFS)       (HR)
                  (CFS)
+      65.      12.25                9.          2.          2.          2.
                (INCHES)          1.376       1.412       1.412       1.412
                (AC-FT)             4.          4.          4.          4.

  PEAK STORAGE  TIME                          MAXIMUM AVERAGE STORAGE
                                    6-HR        24-HR       72-HR      24.92-HR
+   (AC-FT)     (HR)
        0.      12.25                0.          0.          0.          0.

  PEAK STAGE    TIME                          MAXIMUM AVERAGE STAGE
                                    6-HR        24-HR       72-HR      24.92-HR
+   (FEET)      (HR)
   1141.72      12.25             1141.14     1141.03     1141.03     1141.03

                          CUMULATIVE AREA =     .06 SQ MI
```

*** ***

```
              *************
              *           *
62 KK         *   WC18B   *
              *           *
              *************
```

SUB-BASIN WC18B -LAND USE - NATURAL DESERT HILLSLOPES,MINOR DEVELOPMENT
24-HOUR TYPE II RAINFALL WAS USED TO FIND TC & R FOR THIS BASIN
THIS BASIN USED RAINFALL REDUCTION FACTOR OF .97

SUBBASIN RUNOFF DATA

66 BA SUBBASIN CHARACTERISTICS
TAREA .06 SUBBASIN AREA

PRECIPITATION DATA

16 PB STORM 4.07 BASIN TOTAL PRECIPITATION

16 PI INCREMENTAL PRECIPITATION PATTERN

.00	.00	.00	.00	.00	.00	.00	.00	.00	.00
.00	.00	.00	.00	.00	.00	.00	.00	.00	.00
.00	.00	.00	.00	.00	.00	.00	.00	.00	.00
.00	.00	.00	.00	.00	.00	.00	.00	.00	.00
.00	.00	.00	.00	.00	.00	.00	.00	.00	.00
.00	.00	.00	.00	.00	.00	.00	.00	.00	.00
.00	.00	.00	.00	.00	.00	.00	.00	.00	.00
.00	.00	.00	.00	.00	.00	.00	.00	.00	.00
.00	.00	.00	.00	.00	.00	.00	.00	.00	.00
.00	.00	.00	.00	.00	.00	.00	.00	.00	.00
.00	.00	.00	.00	.00	.00	.00	.00	.00	.00
.00	.00	.00	.00	.00	.00	.00	.00	.00	.00
.00	.00	.00	.00	.00	.00	.01	.01	.01	.01
.01	.01	.01	.01	.01	.01	.01	.01	.06	.06
.06	.06	.06	.06	.01	.01	.01	.01	.01	.01
.01	.01	.01	.01	.01	.01	.00	.00	.00	.00
.00	.00	.00	.00	.00	.00	.00	.00	.00	.00
.00	.00	.00	.00	.00	.00	.00	.00	.00	.00
.00	.00	.00	.00	.00	.00	.00	.00	.00	.00
.00	.00	.00	.00	.00	.00	.00	.00	.00	.00
.00	.00	.00	.00	.00	.00	.00	.00	.00	.00
.00	.00	.00	.00	.00	.00	.00	.00	.00	.00
.00	.00	.00	.00	.00	.00	.00	.00	.00	.00
.00	.00	.00	.00	.00	.00	.00	.00	.00	.00
.00	.00	.00	.00	.00	.00	.00	.00	.00	.00
.00	.00	.00	.00	.00	.00	.00	.00	.00	.00
.00	.00	.00	.00	.00	.00	.00	.00	.00	.00
.00	.00	.00	.00	.00	.00	.00	.00	.00	.00
.00	.00	.00	.00	.00	.00	.00	.00		

67 LG GREEN AND AMPT LOSS RATE

STRTL	.15	STARTING LOSS
DTH	.26	MOISTURE DEFICIT
PSIF	4.10	WETTING FRONT SUCTION
XKSAT	.24	HYDRAULIC CONDUCTIVITY
RTIMP	.00	PERCENT IMPERVIOUS AREA

68 UC CLARK UNITGRAPH

TC	.30	TIME OF CONCENTRATION
R	.34	STORAGE COEFFICIENT

69 UA ACCUMULATED-AREA VS. TIME, 11 ORDINATES

.0	3.0	5.0	8.0	12.0	20.0	43.0	75.0	90.0	96.0
100.0									

***

UNIT HYDROGRAPH PARAMETERS
CLARK TC= .30 HR, R= .34 HR
SNYDER TP= .30 HR, CP= .63

UNIT HYDROGRAPH
24 END-OF-PERIOD ORDINATES

4.	20.	58.	80.	66.	52.	40.	32.	25.	19.
15.	12.	9.	7.	6.	4.	3.	3.	2.	2.
1.	1.	1.	1.						

*** *** *** *** ***

HYDROGRAPH AT STATION WC18B

TOTAL RAINFALL = 4.07, TOTAL LOSS = 2.68, TOTAL EXCESS = 1.40

PEAK FLOW	TIME		MAXIMUM AVERAGE FLOW			
			6-HR	24-HR	72-HR	24.92-HR
+ (CFS)	(HR)					
		(CFS)				
+ 72.	12.17		9.	2.	2.	2.
		(INCHES)	1.389	1.389	1.389	1.389
		(AC-FT)	4.	4.	4.	4.

CUMULATIVE AREA = .06 SQ MI

*** ***

```
              *************
              *           *
71 KK         *   RRHV5   *
              *           *
              *************
```

ROUTE FLOW FROM SUB-BASIN WC18B TO COMPUTATION POINT CPHV2

HYDROGRAPH ROUTING DATA

73 RS STORAGE ROUTING

NSTPS	1	NUMBER OF SUBREACHES
ITYP	ELEV	TYPE OF INITIAL CONDITION
RSVRIC	1136.00	INITIAL CONDITION
X	.00	WORKING R AND D COEFFICIENT

74 RC NORMAL DEPTH CHANNEL

ANL	.035	LEFT OVERBANK N-VALUE
ANCH	.040	MAIN CHANNEL N-VALUE
ANR	.035	RIGHT OVERBANK N-VALUE
RLNTH	650.	REACH LENGTH
SEL	.0170	ENERGY SLOPE
ELMAX	1140.0	MAX. ELEV. FOR STORAGE/OUTFLOW CALCULATION

CROSS-SECTION DATA

		--- LEFT OVERBANK ---		+ ------ MAIN CHANNEL		------- +	--- RIGHT OVERBANK ---		
76 RY	ELEVATION	1140.00	1139.00	1138.00	1136.00	1136.00	1138.00	1139.00	1140.00
75 RX	DISTANCE	.00	60.00	120.00	140.00	160.00	190.00	220.00	240.00

***

COMPUTED STORAGE-OUTFLOW-ELEVATION DATA

STORAGE	.00	.07	.16	.26	.38	.52	.67	.85	1.03	1.24
OUTFLOW	.00	7.61	25.57	53.31	91.31	140.26	200.90	274.00	360.33	460.63
ELEVATION	1136.00	1136.21	1136.42	1136.63	1136.84	1137.05	1137.26	1137.47	1137.68	1137.90
STORAGE	1.46	1.74	2.08	2.48	2.94	3.45	4.02	4.64	5.32	6.05
OUTFLOW	589.05	751.81	943.13	1168.34	1432.05	1740.06	2094.10	2496.55	2950.33	3458.55
ELEVATION	1138.11	1138.32	1138.53	1138.74	1138.95	1139.16	1139.37	1139.58	1139.79	1140.00

*** WARNING *** MODIFIED PULS ROUTING MAY BE NUMERICALLY UNSTABLE FOR OUTFLOWS BETWEEN 53. TO 3459.
THE ROUTED HYDROGRAPH SHOULD BE EXAMINED FOR OSCILLATIONS OR OUTFLOWS GREATER THAN PEAK INFLOWS.
THIS CAN BE CORRECTED BY DECREASING THE TIME INTERVAL OR INCREASING STORAGE (USE A LONGER REACH.)

*** *** *** *** ***

HYDROGRAPH AT STATION RRHV5

PEAK FLOW	TIME		MAXIMUM AVERAGE FLOW			
			6-HR	24-HR	72-HR	24.92-HR
+ (CFS)	(HR)					
		(CFS)				
+ 71.	12.17		9.	2.	2.	2.
		(INCHES)	1.389	1.389	1.389	1.389
		(AC-FT)	4.	4.	4.	4.

PEAK STORAGE	TIME	MAXIMUM AVERAGE STORAGE			
		6-HR	24-HR	72-HR	24.92-HR
+ (AC-FT)	(HR)				
0.	12.17	0.	0.	0.	0.

PEAK STAGE	TIME	MAXIMUM AVERAGE STAGE			
		6-HR	24-HR	72-HR	24.92-HR
+ (FEET)	(HR)				
1136.73	12.17	1136.13	1136.03	1136.03	1136.03

CUMULATIVE AREA = .06 SQ MI

*** ***

```
              *************
              *           *
77 KK         *   WC19B   *
              *           *
              *************
```

SUB-BASIN WC19B -LAND USE - DESERT MOUNTAIN,DESERT HILLS;MINOR DEVELOPMENT
24-HOUR TYPE II RAINFALL WAS USED TO FIND TC & R FOR THIS BASIN
THIS BASIN USED RAINFALL REDUCTION FACTOR OF .97

SUBBASIN RUNOFF DATA

81 BA SUBBASIN CHARACTERISTICS
TAREA .21 SUBBASIN AREA

PRECIPITATION DATA

16 PB STORM 4.07 BASIN TOTAL PRECIPITATION

16 PI INCREMENTAL PRECIPITATION PATTERN

.00	.00	.00	.00	.00	.00	.00	.00	.00	.00
.00	.00	.00	.00	.00	.00	.00	.00	.00	.00
.00	.00	.00	.00	.00	.00	.00	.00	.00	.00
.00	.00	.00	.00	.00	.00	.00	.00	.00	.00
.00	.00	.00	.00	.00	.00	.00	.00	.00	.00
.00	.00	.00	.00	.00	.00	.00	.00	.00	.00
.00	.00	.00	.00	.00	.00	.00	.00	.00	.00
.00	.00	.00	.00	.00	.00	.00	.00	.00	.00
.00	.00	.00	.00	.00	.00	.00	.00	.00	.00
.00	.00	.00	.00	.00	.00	.00	.00	.00	.00
.00	.00	.00	.00	.00	.00	.00	.00	.00	.00
.00	.00	.00	.00	.00	.00	.00	.00	.00	.00
.00	.00	.00	.00	.00	.00	.01	.01	.01	.01
.01	.01	.01	.01	.01	.01	.01	.01	.06	.06
.06	.06	.06	.06	.01	.01	.01	.01	.01	.01
.01	.01	.01	.01	.01	.01	.00	.00	.00	.00
.00	.00	.00	.00	.00	.00	.00	.00	.00	.00
.00	.00	.00	.00	.00	.00	.00	.00	.00	.00
.00	.00	.00	.00	.00	.00	.00	.00	.00	.00
.00	.00	.00	.00	.00	.00	.00	.00	.00	.00
.00	.00	.00	.00	.00	.00	.00	.00	.00	.00
.00	.00	.00	.00	.00	.00	.00	.00	.00	.00
.00	.00	.00	.00	.00	.00	.00	.00	.00	.00
.00	.00	.00	.00	.00	.00	.00	.00	.00	.00
.00	.00	.00	.00	.00	.00	.00	.00	.00	.00
.00	.00	.00	.00	.00	.00	.00	.00	.00	.00
.00	.00	.00	.00	.00	.00	.00	.00	.00	.00
.00	.00	.00	.00	.00	.00	.00	.00	.00	.00
.00	.00	.00	.00	.00	.00	.00	.00		

82 LG GREEN AND AMPT LOSS RATE
STRTL .15 STARTING LOSS
DTH .28 MOISTURE DEFICIT
PSIF 3.52 WETTING FRONT SUCTION
XKSAT .26 HYDRAULIC CONDUCTIVITY
RTIMP 40.00 PERCENT IMPERVIOUS AREA

83 UC CLARK UNITGRAPH
TC .22 TIME OF CONCENTRATION
R .16 STORAGE COEFFICIENT

84 UA ACCUMULATED-AREA VS. TIME, 11 ORDINATES

.0	3.0	5.0	8.0	12.0	20.0	43.0	75.0	90.0	96.0
100.0									

***

UNIT HYDROGRAPH PARAMETERS
CLARK TC= .22 HR, R= .16 HR
SNYDER TP= .20 HR, CP= .75

UNIT HYDROGRAPH
12 END-OF-PERIOD ORDINATES

38.	306.	476.	330.	195.	115.	68.	40.	24.	14.
8.	5.								

*** *** *** *** ***

HYDROGRAPH AT STATION WC19B

TOTAL RAINFALL = 4.07, TOTAL LOSS = 1.62, TOTAL EXCESS = 2.45

PEAK FLOW	TIME		MAXIMUM AVERAGE FLOW			
			6-HR	24-HR	72-HR	24.92-HR
+ (CFS)	(HR)					
		(CFS)				
+ 350.	12.08		44.	14.	13.	13.
		(INCHES)	1.963	2.437	2.439	2.439
		(AC-FT)	22.	27.	27.	27.

CUMULATIVE AREA = .21 SQ MI

*** ***

86 KK * RRHV6 *

ROUTE FLOW FROM SUB-BASIN WC19B TO COMPUTATION POINT CPHV2

HYDROGRAPH ROUTING DATA

88 RS STORAGE ROUTING
NSTPS 1 NUMBER OF SUBREACHES
ITYP ELEV TYPE OF INITIAL CONDITION
RSVRIC 1137.00 INITIAL CONDITION
X .00 WORKING R AND D COEFFICIENT

89 RC NORMAL DEPTH CHANNEL
ANL .035 LEFT OVERBANK N-VALUE
ANCH .040 MAIN CHANNEL N-VALUE
ANR .035 RIGHT OVERBANK N-VALUE
RLNTH 640. REACH LENGTH
SEL .0180 ENERGY SLOPE
ELMAX 1139.0 MAX. ELEV. FOR STORAGE/OUTFLOW CALCULATION

CROSS-SECTION DATA

		--- LEFT OVERBANK ---		+	------ MAIN CHANNEL -------		+	--- RIGHT OVERBANK ---	
91 RY	ELEVATION	1139.00	1138.50	1138.00	1137.00	1137.00	1138.00	1139.00	1140.00
90 RX	DISTANCE	.00	10.00	30.00	45.00	60.00	75.00	110.00	140.00

***

COMPUTED STORAGE-OUTFLOW-ELEVATION DATA

STORAGE	.00	.03	.06	.09	.13	.18	.23	.28	.34	.41
OUTFLOW	.00	1.83	6.07	12.50	21.17	32.17	45.65	61.73	80.55	102.25
ELEVATION	1137.00	1137.11	1137.21	1137.32	1137.42	1137.53	1137.63	1137.74	1137.84	1137.95
STORAGE	.48	.56	.65	.76	.88	1.01	1.15	1.29	1.45	1.61
OUTFLOW	129.67	163.73	202.67	247.15	297.76	355.59	420.44	492.37	571.62	658.44
ELEVATION	1138.05	1138.16	1138.26	1138.37	1138.47	1138.58	1138.68	1138.79	1138.89	1139.00

*** WARNING *** MODIFIED PULS ROUTING MAY BE NUMERICALLY UNSTABLE FOR OUTFLOWS BETWEEN 46. TO 658.
THE ROUTED HYDROGRAPH SHOULD BE EXAMINED FOR OSCILLATIONS OR OUTFLOWS GREATER THAN PEAK INFLOWS.
THIS CAN BE CORRECTED BY DECREASING THE TIME INTERVAL OR INCREASING STORAGE (USE A LONGER REACH.)

*** *** *** *** ***

HYDROGRAPH AT STATION RRHV6

PEAK FLOW	TIME		MAXIMUM AVERAGE FLOW			
			6-HR	24-HR	72-HR	24.92-HR
+ (CFS)	(HR)					
		(CFS)				
+ 349.	12.08		44.	14.	13.	13.
		(INCHES)	1.963	2.437	2.439	2.439
		(AC-FT)	22.	27.	27.	27.

PEAK STORAGE	TIME	MAXIMUM AVERAGE STORAGE			
		6-HR	24-HR	72-HR	24.92-HR
+ (AC-FT)	(HR)				
1.	12.08	0.	0.	0.	0.

PEAK STAGE	TIME	MAXIMUM AVERAGE STAGE			
		6-HR	24-HR	72-HR	24.92-HR
+ (FEET)	(HR)				
1138.57	12.08	1137.45	1137.22	1137.22	1137.22

CUMULATIVE AREA = .21 SQ MI

*** ***

92 KK * PM3B *

SUB-BASIN PM3B -LAND USE - NATURAL DESERT HILLSLOPES,MINOR DEVELOPMENT
24-HOUR TYPE II RAINFALL WAS USED TO FIND TC & R FOR THIS BASIN
THIS BASIN USED RAINFALL REDUCTION FACTOR OF .97

SUBBASIN RUNOFF DATA

96 BA SUBBASIN CHARACTERISTICS
TAREA .06 SUBBASIN AREA

PRECIPITATION DATA

16 PB STORM 4.07 BASIN TOTAL PRECIPITATION

16 PI INCREMENTAL PRECIPITATION PATTERN

.00	.00	.00	.00	.00	.00	.00	.00	.00	.00
.00	.00	.00	.00	.00	.00	.00	.00	.00	.00
.00	.00	.00	.00	.00	.00	.00	.00	.00	.00
.00	.00	.00	.00	.00	.00	.00	.00	.00	.00
.00	.00	.00	.00	.00	.00	.00	.00	.00	.00
.00	.00	.00	.00	.00	.00	.00	.00	.00	.00
.00	.00	.00	.00	.00	.00	.00	.00	.00	.00
.00	.00	.00	.00	.00	.00	.00	.00	.00	.00
.00	.00	.00	.00	.00	.00	.00	.00	.00	.00
.00	.00	.00	.00	.00	.00	.00	.00	.00	.00
.00	.00	.00	.00	.00	.00	.00	.00	.00	.00
.00	.00	.00	.00	.00	.00	.00	.00	.00	.00
.00	.00	.00	.00	.00	.00	.01	.01	.01	.01

```
          .01     .01     .01     .01     .01     .01     .01     .01     .06     .06
          .06     .06     .06     .06     .01     .01     .01     .01     .01     .01
          .01     .01     .01     .01     .01     .01     .00     .00     .00     .00
          .00     .00     .00     .00     .00     .00     .00     .00     .00     .00
          .00     .00     .00     .00     .00     .00     .00     .00     .00     .00
          .00     .00     .00     .00     .00     .00     .00     .00     .00     .00
          .00     .00     .00     .00     .00     .00     .00     .00     .00     .00
          .00     .00     .00     .00     .00     .00     .00     .00     .00     .00
          .00     .00     .00     .00     .00     .00     .00     .00     .00     .00
          .00     .00     .00     .00     .00     .00     .00     .00     .00     .00
          .00     .00     .00     .00     .00     .00     .00     .00     .00     .00
          .00     .00     .00     .00     .00     .00     .00     .00     .00     .00
          .00     .00     .00     .00     .00     .00     .00     .00     .00     .00
          .00     .00     .00     .00     .00     .00     .00     .00     .00     .00
          .00     .00     .00     .00     .00     .00     .00     .00     .00     .00
          .00     .00     .00     .00     .00     .00     .00     .00

97 LG     GREEN AND AMPT LOSS RATE
               STRTL        .15  STARTING LOSS
                 DTH        .34  MOISTURE DEFICIT
                PSIF       3.10  WETTING FRONT SUCTION
               XKSAT        .95  HYDRAULIC CONDUCTIVITY
               RTIMP       5.00  PERCENT IMPERVIOUS AREA

98 UC     CLARK UNITGRAPH
                  TC        .28  TIME OF CONCENTRATION
                   R        .27  STORAGE COEFFICIENT

99 UA     ACCUMULATED-AREA VS. TIME,  11 ORDINATES
               .0      3.0     5.0     8.0     12.0    20.0    43.0    75.0    90.0    96.0
            100.0

                                        ***

                                  UNIT HYDROGRAPH PARAMETERS
                              CLARK   TC=    .28 HR,       R=    .27 HR
                             SNYDER   TP=    .28 HR,      CP=    .67

                                    UNIT HYDROGRAPH
                                20 END-OF-PERIOD ORDINATES
           5.      28.     75.     91.     70.     52.     38.     28.     21.     15.
          11.       8.      6.      4.      3.      2.      2.      1.      1.      1.

   ***           ***           ***           ***           ***

                          HYDROGRAPH AT STATION     PM3B

      TOTAL RAINFALL =    4.07, TOTAL LOSS =    3.19, TOTAL EXCESS =     .88

  PEAK FLOW     TIME                          MAXIMUM AVERAGE FLOW
                                    6-HR        24-HR        72-HR      24.92-HR
+   (CFS)       (HR)
                          (CFS)
+      46.     12.17                5.           1.           1.           1.
                         (INCHES)   .818         .877         .877         .877
                         (AC-FT)      3.           3.           3.           3.

                         CUMULATIVE AREA =     .06 SQ MI


*** *** *** *** *** *** *** *** *** *** *** *** *** *** *** *** *** *** *** *** *** *** *** *** *** *** *** *** *** *** *** *** *** *** ***


            **************
            *            *
101 KK      *     CPHV2  *
            *            *
            **************
                      COMBINE ROUTED FLOW FROM CPHV1, WC18B, WC19B WITH RUNOFF FROM SUB-BASIN PM3B

103 HC            HYDROGRAPH COMBINATION
                       ICOMP          4  NUMBER OF HYDROGRAPHS TO COMBINE

                                                ***

     ***           ***           ***           ***           ***

                          HYDROGRAPH AT STATION     CPHV2

  PEAK FLOW     TIME                          MAXIMUM AVERAGE FLOW
                                    6-HR        24-HR        72-HR      24.92-HR
+   (CFS)       (HR)
                          (CFS)
+      516.     12.08               67.          20.          19.          19.
                         (INCHES)  1.609        1.880        1.882        1.882
                         (AC-FT)     33.          39.          39.          39.

                         CUMULATIVE AREA =     .39 SQ MI


*** *** *** *** *** *** *** *** *** *** *** *** *** *** *** *** *** *** *** *** *** *** *** *** *** *** *** *** *** *** *** *** *** *** ***
```

```
            **************
            *            *
104 KK      *     RRHV7  *
            *            *
            **************
                      ROUTE FLOW FROM COMPUTATION CPHV2 TO COMPUTATION POINT CPHV3

          HYDROGRAPH ROUTING DATA

106 RS          STORAGE ROUTING
                     NSTPS          1  NUMBER OF SUBREACHES
                      ITYP       ELEV  TYPE OF INITIAL CONDITION
                     RSVRIC   1126.00  INITIAL CONDITION
                         X        .00 WORKING R AND D COEFFICIENT

107 RC          NORMAL DEPTH CHANNEL
                       ANL       .035  LEFT OVERBANK N-VALUE
                      ANCH       .040  MAIN CHANNEL N-VALUE
                       ANR       .035  RIGHT OVERBANK N-VALUE
                     RLNTH       750.  REACH LENGTH
                       SEL      .0110  ENERGY SLOPE
                     ELMAX     1130.0  MAX. ELEV. FOR STORAGE/OUTFLOW CALCULATION

                                CROSS-SECTION DATA
                        --- LEFT OVERBANK --- + ------ MAIN CHANNEL ------- + --- RIGHT OVERBANK ---
109 RY       ELEVATION  1130.00  1129.00  1128.00  1126.00  1126.00  1128.00  1132.00  1133.00
108 RX       DISTANCE       .00    40.00    90.00   160.00   190.00   210.00   250.00   390.00

                                        ***

                          COMPUTED STORAGE-OUTFLOW-ELEVATION DATA

     STORAGE       .00      .13      .29      .48      .71      .97     1.27     1.60     1.97     2.37
     OUTFLOW       .00     9.29    31.60    66.68   115.44   179.03   258.60   355.35   470.42   604.94
   ELEVATION  1126.00  1126.21  1126.42  1126.63  1126.84  1127.05  1127.26  1127.47  1127.68  1127.90

     STORAGE      2.81     3.29     3.81     4.39     5.01     5.67     6.37     7.11     7.88     8.70
     OUTFLOW    778.20   993.56  1236.45  1509.22  1813.90  2153.64  2528.40  2938.84  3386.12  3871.49
   ELEVATION  1128.11  1128.32  1128.53  1128.74  1128.95  1129.16  1129.37  1129.58  1129.79  1130.00

*** WARNING *** MODIFIED PULS ROUTING MAY BE NUMERICALLY UNSTABLE FOR OUTFLOWS BETWEEN      259. TO     3871.
                THE ROUTED HYDROGRAPH SHOULD BE EXAMINED FOR OSCILLATIONS OR OUTFLOWS GREATER THAN PEAK INFLOWS.
                THIS CAN BE CORRECTED BY DECREASING THE TIME INTERVAL OR INCREASING STORAGE (USE A LONGER REACH.)

   ***           ***           ***           ***           ***

                          HYDROGRAPH AT STATION     RRHV7

  PEAK FLOW     TIME                          MAXIMUM AVERAGE FLOW
                                    6-HR        24-HR        72-HR      24.92-HR
+   (CFS)       (HR)
                          (CFS)
+      508.     12.17               67.          20.          19.          19.
                         (INCHES)  1.609        1.880        1.881        1.881
                         (AC-FT)     33.          39.          39.          39.

  PEAK STORAGE  TIME                          MAXIMUM AVERAGE STORAGE
                                    6-HR        24-HR        72-HR      24.92-HR
+  (AC-FT)      (HR)
                2.     12.17                 0.           0.           0.           0.

  PEAK STAGE    TIME                          MAXIMUM AVERAGE STAGE
                                    6-HR        24-HR        72-HR      24.92-HR
+   (FEET)      (HR)
             1127.74     12.17          1126.45      1126.18      1126.17      1126.17

          CUMULATIVE AREA =     .39 SQ MI


*** *** *** *** *** *** *** *** *** *** *** *** *** *** *** *** *** *** *** *** *** *** *** *** *** *** *** *** *** *** *** *** *** *** ***


            **************
            *            *
110 KK      *     WC20B  *
            *            *
            **************
                      SUB-BASIN WC20B -LAND USE - NATURAL DESERT HILLSLOPES,MINOR DEVELOPMENT
                      24-HOUR TYPE II RAINFALL WAS USED TO FIND TC & R FOR THIS BASIN
                      THIS BASIN USED RAINFALL REDUCTION FACTOR OF .97

          SUBBASIN RUNOFF DATA

114 BA          SUBBASIN CHARACTERISTICS
                      TAREA        .01  SUBBASIN AREA

                PRECIPITATION DATA

 16 PB                STORM       4.07  BASIN TOTAL PRECIPITATION
```

16 PI INCREMENTAL PRECIPITATION PATTERN

.00	.00	.00	.00	.00	.00	.00	.00	.00	.00
.00	.00	.00	.00	.00	.00	.00	.00	.00	.00
.00	.00	.00	.00	.00	.00	.00	.00	.00	.00
.00	.00	.00	.00	.00	.00	.00	.00	.00	.00
.00	.00	.00	.00	.00	.00	.00	.00	.00	.00
.00	.00	.00	.00	.00	.00	.00	.00	.00	.00
.00	.00	.00	.00	.00	.00	.00	.00	.00	.00
.00	.00	.00	.00	.00	.00	.00	.00	.00	.00
.00	.00	.00	.00	.00	.00	.00	.00	.00	.00
.00	.00	.00	.00	.00	.00	.00	.00	.00	.00
.00	.00	.00	.00	.00	.00	.00	.00	.00	.00
.00	.00	.00	.00	.00	.00	.00	.00	.00	.00
.00	.00	.00	.00	.00	.00	.01	.01	.01	.01
.01	.01	.01	.01	.01	.01	.01	.01	.06	.06
.06	.06	.06	.06	.01	.01	.01	.01	.01	.01
.01	.01	.01	.01	.01	.01	.00	.00	.00	.00
.00	.00	.00	.00	.00	.00	.00	.00	.00	.00
.00	.00	.00	.00	.00	.00	.00	.00	.00	.00
.00	.00	.00	.00	.00	.00	.00	.00	.00	.00
.00	.00	.00	.00	.00	.00	.00	.00	.00	.00
.00	.00	.00	.00	.00	.00	.00	.00	.00	.00
.00	.00	.00	.00	.00	.00	.00	.00	.00	.00
.00	.00	.00	.00	.00	.00	.00	.00	.00	.00
.00	.00	.00	.00	.00	.00	.00	.00	.00	.00
.00	.00	.00	.00	.00	.00	.00	.00	.00	.00
.00	.00	.00	.00	.00	.00	.00	.00	.00	.00
.00	.00	.00	.00	.00	.00	.00	.00	.00	.00
.00	.00	.00	.00	.00	.00	.00	.00	.00	.00
.00	.00	.00	.00	.00	.00	.00	.00		

115 LG GREEN AND AMPT LOSS RATE

STRTL	.15	STARTING LOSS
DTH	.25	MOISTURE DEFICIT
PSIF	8.60	WETTING FRONT SUCTION
XKSAT	.07	HYDRAULIC CONDUCTIVITY
RTIMP	.00	PERCENT IMPERVIOUS AREA

116 UC CLARK UNITGRAPH

TC	.23	TIME OF CONCENTRATION
R	.26	STORAGE COEFFICIENT

117 UA ACCUMULATED-AREA VS. TIME, 11 ORDINATES

.0	3.0	5.0	8.0	12.0	20.0	43.0	75.0	90.0	96.0
100.0									

***

UNIT HYDROGRAPH PARAMETERS

CLARK TC= .23 HR, R= .26 HR

SNYDER TP= .23 HR, CP= .60

UNIT HYDROGRAPH

19 END-OF-PERIOD ORDINATES

2.	13.	23.	20.	14.	10.	7.	5.	4.	3.
2.	1.	1.	1.	1.	0.	0.	0.	0.	

*** *** *** *** ***

HYDROGRAPH AT STATION WC20B

TOTAL RAINFALL = 4.07, TOTAL LOSS = 2.28, TOTAL EXCESS = 1.80

PEAK FLOW	TIME		MAXIMUM AVERAGE FLOW			
			6-HR	24-HR	72-HR	24.92-HR
+ (CFS)	(HR)					
		(CFS)				
+ 21.	12.08		3.	1.	1.	1.
		(INCHES)	1.790	1.790	1.790	1.790
		(AC-FT)	1.	1.	1.	1.

CUMULATIVE AREA = .01 SQ MI

*** ***

```
              **************
              *            *
119 KK        *   RRHV8    *
              *            *
              **************
```

ROUTE FLOW FROM SUB-BASIN WC20B TO COMPUTATION POINT CPHV3

HYDROGRAPH ROUTING DATA

121 RS STORAGE ROUTING

NSTPS	1	NUMBER OF SUBREACHES
ITYP	ELEV	TYPE OF INITIAL CONDITION
RSVRIC	1132.00	INITIAL CONDITION
X	.00	WORKING R AND D COEFFICIENT

122 RC NORMAL DEPTH CHANNEL

ANL	.035	LEFT OVERBANK N-VALUE
ANCH	.035	MAIN CHANNEL N-VALUE
ANR	.035	RIGHT OVERBANK N-VALUE
RLNTH	850.	REACH LENGTH
SEL	.0220	ENERGY SLOPE
ELMAX	1134.5	MAX. ELEV. FOR STORAGE/OUTFLOW CALCULATION

CROSS-SECTION DATA

--- LEFT OVERBANK --- + ------ MAIN CHANNEL ------- + --- RIGHT OVERBANK ---

124 RY	ELEVATION	1134.50	1134.00	1133.00	1132.00	1132.00	1134.00	1134.00	1134.50
123 RX	DISTANCE	.00	10.00	20.00	30.00	40.00	60.00	170.00	220.00

***

COMPUTED STORAGE-OUTFLOW-ELEVATION DATA

STORAGE	.00	.03	.06	.11	.16	.21	.28	.35	.42	.50
OUTFLOW	.00	2.26	7.59	15.82	27.10	41.62	59.61	81.30	108.03	140.57
ELEVATION	1132.00	1132.13	1132.26	1132.39	1132.53	1132.66	1132.79	1132.92	1133.05	1133.18
STORAGE	.59	.69	.79	.90	1.02	1.15	1.51	1.98	2.48	3.03
OUTFLOW	177.48	218.99	265.32	316.67	373.24	435.22	525.90	657.13	820.90	1016.06
ELEVATION	1133.32	1133.45	1133.58	1133.71	1133.84	1133.97	1134.11	1134.24	1134.37	1134.50

*** WARNING *** MODIFIED PULS ROUTING MAY BE NUMERICALLY UNSTABLE FOR OUTFLOWS BETWEEN 60. TO 1016.
THE ROUTED HYDROGRAPH SHOULD BE EXAMINED FOR OSCILLATIONS OR OUTFLOWS GREATER THAN PEAK INFLOWS.
THIS CAN BE CORRECTED BY DECREASING THE TIME INTERVAL OR INCREASING STORAGE (USE A LONGER REACH.)

*** *** *** *** ***

HYDROGRAPH AT STATION RRHV8

PEAK FLOW	TIME		MAXIMUM AVERAGE FLOW			
			6-HR	24-HR	72-HR	24.92-HR
+ (CFS)	(HR)					
		(CFS)				
+ 21.	12.17		3.	1.	1.	1.
		(INCHES)	1.790	1.790	1.790	1.790
		(AC-FT)	1.	1.	1.	1.

PEAK STORAGE	TIME	MAXIMUM AVERAGE STORAGE			
		6-HR	24-HR	72-HR	24.92-HR
+ (AC-FT)	(HR)				
0.	12.17	0.	0.	0.	0.

PEAK STAGE	TIME	MAXIMUM AVERAGE STAGE			
		6-HR	24-HR	72-HR	24.92-HR
+ (FEET)	(HR)				
1132.45	12.17	1132.08	1132.02	1132.02	1132.02

CUMULATIVE AREA = .01 SQ MI

*** ***

```
              **************
              *            *
125 KK        *   CPHV3    *
              *            *
              **************
```

COMBINE ROUTED FLOWS FROM SUB-BASIN WC20B AND COMPUTATION POINT CPHV3

127 HC HYDROGRAPH COMBINATION

ICOMP 2 NUMBER OF HYDROGRAPHS TO COMBINE

***

*** *** *** *** ***

HYDROGRAPH AT STATION CPHV3

PEAK FLOW	TIME		MAXIMUM AVERAGE FLOW			
			6-HR	24-HR	72-HR	24.92-HR
+ (CFS)	(HR)					
		(CFS)				
+ 528.	12.17		70.	20.	20.	20.
		(INCHES)	1.615	1.877	1.878	1.878
		(AC-FT)	35.	40.	40.	40.

CUMULATIVE AREA = .40 SQ MI

*** ***

```
              **************
              *            *
128 KK        *   RRHV9    *
              *            *
```

```
              **************
                     ROUTE FLOW FROM COMPUTATION CPHV3 TO COMPUTATION POINT CPHV4

              HYDROGRAPH ROUTING DATA

 130 RS          STORAGE ROUTING
                      NSTPS          1  NUMBER OF SUBREACHES
                      ITYP        ELEV  TYPE OF INITIAL CONDITION
                      RSVRIC   1121.00  INITIAL CONDITION
                      X            .00  WORKING R AND D COEFFICIENT

 131 RC          NORMAL DEPTH CHANNEL
                      ANL         .035  LEFT OVERBANK N-VALUE
                      ANCH        .040  MAIN CHANNEL N-VALUE
                      ANR         .035  RIGHT OVERBANK N-VALUE
                      RLNTH       780.  REACH LENGTH
                      SEL        .0080  ENERGY SLOPE
                      ELMAX     1126.0  MAX. ELEV. FOR STORAGE/OUTFLOW CALCULATION

                                    CROSS-SECTION DATA
                      --- LEFT OVERBANK --- + ------ MAIN CHANNEL ------- + --- RIGHT OVERBANK ---
 133 RY        ELEVATION  1126.00  1124.00  1122.00  1121.00  1121.00  1122.00  1124.00  1126.00
 132 RX        DISTANCE       .00   100.00   130.00   150.00   165.00   180.00   290.00   350.00

                                                   ***

                                      COMPUTED STORAGE-OUTFLOW-ELEVATION DATA

              STORAGE       .00       .09       .23       .41       .63       .93      1.31      1.78      2.34      2.98
              OUTFLOW       .00      6.13     22.31     49.84     92.49    161.00    254.31    377.48    534.88    730.49
            ELEVATION   1121.00   1121.26   1121.53   1121.79   1122.05   1122.32   1122.58   1122.84   1123.11   1123.37

              STORAGE      3.71      4.53      5.44      6.44      7.54      8.75     10.05     11.45     12.95     14.55
              OUTFLOW    968.08   1251.19   1581.53   1969.77   2419.00   2931.29   3509.54   4156.90   4876.58   5672.07
            ELEVATION   1123.63   1123.90   1124.16   1124.42   1124.68   1124.95   1125.21   1125.47   1125.74   1126.00

*** WARNING *** MODIFIED PULS ROUTING MAY BE NUMERICALLY UNSTABLE FOR OUTFLOWS BETWEEN       535. TO      5672.
                THE ROUTED HYDROGRAPH SHOULD BE EXAMINED FOR OSCILLATIONS OR OUTFLOWS GREATER THAN PEAK INFLOWS.
                THIS CAN BE CORRECTED BY DECREASING THE TIME INTERVAL OR INCREASING STORAGE (USE A LONGER REACH.)

          ***             ***             ***             ***             ***

                         HYDROGRAPH AT STATION     RRHV9

 PEAK FLOW      TIME                          MAXIMUM AVERAGE FLOW
                                      6-HR        24-HR       72-HR      24.92-HR
+  (CFS)        (HR)
                            (CFS)
+     523.     12.17                   70.          20.          20.         20.
                         (INCHES)     1.615        1.876        1.878       1.878
                          (AC-FT)       35.          40.          40.         40.

 PEAK STORAGE   TIME                         MAXIMUM AVERAGE STORAGE
                                      6-HR        24-HR       72-HR      24.92-HR
+  (AC-FT)      (HR)
        2.     12.17                    0.           0.          0.          0.

 PEAK STAGE     TIME                          MAXIMUM AVERAGE STAGE
                                      6-HR        24-HR       72-HR      24.92-HR
+  (FEET)       (HR)
   1123.09     12.17                1121.64      1121.28     1121.27     1121.27

                      CUMULATIVE AREA =      .40 SQ MI

*** *** *** *** *** *** *** *** *** *** *** *** *** *** *** *** *** *** *** *** *** *** *** *** *** *** *** *** *** *** *** *** *** ***

              **************
              *            *
 134 KK       *    WC21B   *
              *            *
              **************
                     SUB-BASIN WC21B -LAND USE - NATURAL DESERT HILLSLOPES,MINOR DEVELOPMENT
                     24-HOUR TYPE II RAINFALL WAS USED TO FIND TC & R FOR THIS BASIN
                     THIS BASIN USED RAINFALL REDUCTION FACTOR OF .97

              SUBBASIN RUNOFF DATA

 138 BA          SUBBASIN CHARACTERISTICS
                      TAREA         .02  SUBBASIN AREA

                 PRECIPITATION DATA

  16 PB               STORM        4.07  BASIN TOTAL PRECIPITATION

  16 PI          INCREMENTAL PRECIPITATION PATTERN
                   .00       .00       .00       .00       .00       .00       .00       .00       .00       .00
                   .00       .00       .00       .00       .00       .00       .00       .00       .00       .00
                   .00       .00       .00       .00       .00       .00       .00       .00       .00       .00
                   .00       .00       .00       .00       .00       .00       .00       .00       .00       .00
                   .00       .00       .00       .00       .00       .00       .00       .00       .00       .00
                   .00       .00       .00       .00       .00       .00       .00       .00       .00       .00
                   .00       .00       .00       .00       .00       .00       .00       .00       .00       .00
                   .00       .00       .00       .00       .00       .00       .00       .00       .00       .00
                   .00       .00       .00       .00       .00       .00       .00       .00       .00       .00
                   .00       .00       .00       .00       .00       .00       .00       .00       .00       .00
                   .00       .00       .00       .00       .00       .00       .00       .00       .00       .00
                   .00       .00       .00       .00       .00       .00       .00       .00       .00       .00
                   .00       .00       .00       .00       .00       .00       .01       .01       .01       .01
                   .01       .01       .01       .01       .01       .01       .01       .01       .06       .06
                   .06       .06       .06       .06       .01       .01       .01       .01       .01       .01
                   .01       .01       .01       .01       .01       .01       .00       .00       .00       .00
                   .00       .00       .00       .00       .00       .00       .00       .00       .00       .00
                   .00       .00       .00       .00       .00       .00       .00       .00       .00       .00
                   .00       .00       .00       .00       .00       .00       .00       .00       .00       .00
                   .00       .00       .00       .00       .00       .00       .00       .00       .00       .00
                   .00       .00       .00       .00       .00       .00       .00       .00       .00       .00
                   .00       .00       .00       .00       .00       .00       .00       .00       .00       .00
                   .00       .00       .00       .00       .00       .00       .00       .00       .00       .00
                   .00       .00       .00       .00       .00       .00       .00       .00       .00       .00
                   .00       .00       .00       .00       .00       .00       .00       .00       .00       .00
                   .00       .00       .00       .00       .00       .00       .00       .00       .00       .00
                   .00       .00       .00       .00       .00       .00       .00       .00       .00       .00
                   .00       .00       .00       .00       .00       .00       .00       .00

 139 LG          GREEN AND AMPT LOSS RATE
                      STRTL         .15  STARTING LOSS
                        DTH         .26  MOISTURE DEFICIT
                       PSIF        4.10  WETTING FRONT SUCTION
                      XKSAT         .24  HYDRAULIC CONDUCTIVITY
                      RTIMP         .00  PERCENT IMPERVIOUS AREA

 140 UC          CLARK UNITGRAPH
                         TC         .28  TIME OF CONCENTRATION
                          R         .38  STORAGE COEFFICIENT

 141 UA          ACCUMULATED-AREA VS. TIME,  11 ORDINATES
                      .0        3.0        5.0        8.0       12.0       20.0       43.0       75.0       90.0       96.0
                   100.0

                                                   ***

                                         UNIT HYDROGRAPH PARAMETERS
                                       CLARK   TC=    .28 HR,        R=   .38 HR
                                      SNYDER   TP=    .29 HR,       CP=   .57

                                              UNIT HYDROGRAPH
                                          27 END-OF-PERIOD ORDINATES
            1.         9.        23.        29.        24.        20.        16.        13.        10.         8.
            7.         5.         4.         3.         3.         2.         2.         1.         1.         1.
            1.         1.         0.         0.         0.         0.         0.

          ***             ***             ***             ***             ***

                         HYDROGRAPH AT STATION     WC21B

   TOTAL RAINFALL =      4.07, TOTAL LOSS =      2.68, TOTAL EXCESS =      1.40

 PEAK FLOW      TIME                          MAXIMUM AVERAGE FLOW
                                      6-HR        24-HR       72-HR      24.92-HR
+  (CFS)        (HR)
                            (CFS)
+      27.     12.17                    4.           1.          1.          1.
                         (INCHES)     1.389        1.389       1.389       1.389
                          (AC-FT)        2.           2.          2.          2.

                      CUMULATIVE AREA =      .02 SQ MI

*** *** *** *** *** *** *** *** *** *** *** *** *** *** *** *** *** *** *** *** *** *** *** *** *** *** *** *** *** *** *** *** *** ***

              **************
              *            *
 143 KK       *   RRHV10   *
              *            *
              **************
                     ROUTE FLOW FROM SUB-BASIN WC21B TO COMPUTATION POINT CPHV4

              HYDROGRAPH ROUTING DATA

 145 RS          STORAGE ROUTING
                      NSTPS          2  NUMBER OF SUBREACHES
                      ITYP        ELEV  TYPE OF INITIAL CONDITION
                      RSVRIC   1129.00  INITIAL CONDITION
                      X            .00  WORKING R AND D COEFFICIENT

 146 RC          NORMAL DEPTH CHANNEL
                      ANL         .035  LEFT OVERBANK N-VALUE
                      ANCH        .035  MAIN CHANNEL N-VALUE
                      ANR         .035  RIGHT OVERBANK N-VALUE
                      RLNTH      1110.  REACH LENGTH
                      SEL        .0220  ENERGY SLOPE
```

```
                     ELMAX      1130.0  MAX. ELEV. FOR STORAGE/OUTFLOW CALCULATION

                                              CROSS-SECTION DATA
                                 --- LEFT OVERBANK --- + ------ MAIN CHANNEL ------- + --- RIGHT OVERBANK ---
 148 RY         ELEVATION  1130.00   1129.75   1129.50   1129.00   1129.00   1129.50   1129.75   1130.00
 147 RX         DISTANCE       .00     25.00     50.00     75.00    100.00    125.00    175.00    200.00

                                                          ***

                                          COMPUTED STORAGE-OUTFLOW-ELEVATION DATA

              STORAGE       .00       .04       .08       .13       .19       .26       .33       .41       .49       .59
              OUTFLOW       .00      1.21      4.03      8.29     14.05     21.35     30.30     40.98     53.47     67.88
            ELEVATION   1129.00   1129.05   1129.11   1129.16   1129.21   1129.26   1129.32   1129.37   1129.42   1129.47

              STORAGE       .69       .81       .95      1.12      1.30      1.51      1.73      1.96      2.21      2.47
              OUTFLOW     86.09    108.73    134.67    164.38    198.28    237.20    280.92    329.38    382.72    441.09
            ELEVATION   1129.53   1129.58   1129.63   1129.68   1129.74   1129.79   1129.84   1129.89   1129.95   1130.00

*** WARNING *** MODIFIED PULS ROUTING MAY BE NUMERICALLY UNSTABLE FOR OUTFLOWS BETWEEN        53. TO       441.
                THE ROUTED HYDROGRAPH SHOULD BE EXAMINED FOR OSCILLATIONS OR OUTFLOWS GREATER THAN PEAK INFLOWS.
                THIS CAN BE CORRECTED BY DECREASING THE TIME INTERVAL OR INCREASING STORAGE (USE A LONGER REACH.)

        ***              ***              ***              ***              ***

                      HYDROGRAPH AT STATION    RRHV10

  PEAK FLOW      TIME                          MAXIMUM AVERAGE FLOW
                                      6-HR         24-HR         72-HR       24.92-HR
+   (CFS)        (HR)
                             (CFS)
+      26.      12.25                    4.            1.            1.            1.
                           (INCHES)  1.389         1.389         1.389         1.389
                           (AC-FT)      2.            2.            2.            2.

 PEAK STORAGE    TIME                          MAXIMUM AVERAGE STORAGE
                                      6-HR         24-HR         72-HR       24.92-HR
+  (AC-FT)       (HR)
         0.     12.25                   0.            0.            0.            0.

  PEAK STAGE     TIME                          MAXIMUM AVERAGE STAGE
                                      6-HR         24-HR         72-HR       24.92-HR
+   (FEET)       (HR)
   1129.29      12.25              1129.06       1129.01       1129.01       1129.01

                      CUMULATIVE AREA =       .02 SQ MI


*** *** *** *** *** *** *** *** *** *** *** *** *** *** *** *** *** *** *** *** *** *** *** *** *** *** *** *** *** *** *** *** *** ***

                 ***************
                 *             *
 149 KK          *      PM4B   *
                 *             *
                 ***************
                           SUB-BASIN PM4B -LAND USE - NATURAL DESERT HILLSLOPES,MINOR DEVELOPMENT
                           24-HOUR TYPE II RAINFALL WAS USED TO FIND TC & R FOR THIS BASIN
                           THIS BASIN USED RAINFALL REDUCTION FACTOR OF .97

                SUBBASIN RUNOFF DATA

 153 BA           SUBBASIN CHARACTERISTICS
                     TAREA          .14  SUBBASIN AREA

                  PRECIPITATION DATA

  16 PB              STORM          4.07  BASIN TOTAL PRECIPITATION

  16 PI            INCREMENTAL PRECIPITATION PATTERN
                       .00       .00       .00       .00       .00       .00       .00       .00       .00       .00
                       .00       .00       .00       .00       .00       .00       .00       .00       .00       .00
                       .00       .00       .00       .00       .00       .00       .00       .00       .00       .00
                       .00       .00       .00       .00       .00       .00       .00       .00       .00       .00
                       .00       .00       .00       .00       .00       .00       .00       .00       .00       .00
                       .00       .00       .00       .00       .00       .00       .00       .00       .00       .00
                       .00       .00       .00       .00       .00       .00       .00       .00       .00       .00
                       .00       .00       .00       .00       .00       .00       .00       .00       .00       .00
                       .00       .00       .00       .00       .00       .00       .00       .00       .00       .00
                       .00       .00       .00       .00       .00       .00       .00       .00       .00       .00
                       .00       .00       .00       .00       .00       .00       .00       .00       .00       .00
                       .00       .00       .00       .00       .00       .00       .00       .00       .00       .00
                       .00       .00       .00       .00       .00       .00       .01       .01       .01       .01
                       .01       .01       .01       .01       .01       .01       .01       .01       .06       .06
                       .06       .06       .06       .06       .01       .01       .01       .01       .01       .01
                       .01       .01       .01       .01       .01       .01       .00       .00       .00       .00
                       .00       .00       .00       .00       .00       .00       .00       .00       .00       .00
                       .00       .00       .00       .00       .00       .00       .00       .00       .00       .00
                       .00       .00       .00       .00       .00       .00       .00       .00       .00       .00
                       .00       .00       .00       .00       .00       .00       .00       .00       .00       .00
                       .00       .00       .00       .00       .00       .00       .00       .00       .00       .00
                       .00       .00       .00       .00       .00       .00       .00       .00       .00       .00
```

```
                       .00       .00       .00       .00       .00       .00       .00       .00       .00       .00
                       .00       .00       .00       .00       .00       .00       .00       .00       .00       .00
                       .00       .00       .00       .00       .00       .00       .00       .00       .00       .00
                       .00       .00       .00       .00       .00       .00       .00       .00       .00       .00
                       .00       .00       .00       .00       .00       .00       .00       .00       .00       .00
                       .00       .00       .00       .00       .00       .00       .00       .00       .00       .00
                       .00       .00       .00       .00       .00       .00       .00       .00

 154 LG           GREEN AND AMPT LOSS RATE
                        STRTL         .15  STARTING LOSS
                          DTH         .33  MOISTURE DEFICIT
                         PSIF        3.45  WETTING FRONT SUCTION
                        XKSAT         .76  HYDRAULIC CONDUCTIVITY
                        RTIMP       15.00  PERCENT IMPERVIOUS AREA

 155 UC           CLARK UNITGRAPH
                           TC         .28  TIME OF CONCENTRATION
                            R         .19  STORAGE COEFFICIENT

 156 UA           ACCUMULATED-AREA VS. TIME,  11 ORDINATES
                          .0       3.0       5.0       8.0      12.0      20.0      43.0      75.0      90.0      96.0
                       100.0

                                                     ***

                                              UNIT HYDROGRAPH PARAMETERS
                                        CLARK   TC=    .28 HR,        R=   .19 HR
                                       SNYDER   TP=    .26 HR,       CP=   .78

                                                   UNIT HYDROGRAPH
                                              14 END-OF-PERIOD ORDINATES
                  15.       89.      228.      263.      177.      113.       72.       46.       29.       19.
                  12.        8.        5.        3.

        ***              ***              ***              ***              ***

                      HYDROGRAPH AT STATION      PM4B

     TOTAL RAINFALL =     4.07, TOTAL LOSS =     2.75, TOTAL EXCESS =     1.33

  PEAK FLOW      TIME                          MAXIMUM AVERAGE FLOW
                                      6-HR         24-HR         72-HR       24.92-HR
+   (CFS)        (HR)
                             (CFS)
+     151.      12.08                   17.            5.            5.            5.
                           (INCHES)  1.143         1.321         1.322         1.322
                           (AC-FT)      9.           10.           10.           10.

                      CUMULATIVE AREA =       .14 SQ MI


*** *** *** *** *** *** *** *** *** *** *** *** *** *** *** *** *** *** *** *** *** *** *** *** *** *** *** *** *** *** *** *** *** ***

                 ***************
                 *             *
 158 KK          *      CPHV4  *
                 *             *
                 ***************
                            COMBINE ROUTED FLOWS FROM SUB-BASINS WC21B PM4B AND  COMPUTATION POINT CPHV4

 160 HC           HYDROGRAPH COMBINATION
                        ICOMP           3  NUMBER OF HYDROGRAPHS TO COMBINE

                                                     ***

        ***              ***              ***              ***              ***

                      HYDROGRAPH AT STATION     CPHV4

  PEAK FLOW      TIME                          MAXIMUM AVERAGE FLOW
                                      6-HR         24-HR         72-HR       24.92-HR
+   (CFS)        (HR)
                             (CFS)
+     695.      12.17                   91.           26.           25.           25.
                           (INCHES)  1.489         1.718         1.720         1.720
                           (AC-FT)     45.           52.           52.           52.

                      CUMULATIVE AREA =       .57 SQ MI


*** *** *** *** *** *** *** *** *** *** *** *** *** *** *** *** *** *** *** *** *** *** *** *** *** *** *** *** *** *** *** *** *** ***

                 ***************
                 *             *
 161 KK          *     RRHV11  *
                 *             *
                 ***************
                            ROUTE FLOW FROM COMPUTATION CPHV4 TO COMPUTATION POINT CPHV5
```

```
              HYDROGRAPH ROUTING DATA

 163 RS         STORAGE ROUTING
                     NSTPS          1  NUMBER OF SUBREACHES
                      ITYP       ELEV  TYPE OF INITIAL CONDITION
                    RSVRIC    1116.00  INITIAL CONDITION
                         X        .00 WORKING R AND D COEFFICIENT

 164 RC         NORMAL DEPTH CHANNEL
                       ANL       .035  LEFT OVERBANK N-VALUE
                      ANCH       .040  MAIN CHANNEL N-VALUE
                       ANR       .035  RIGHT OVERBANK N-VALUE
                     RLNTH       340.  REACH LENGTH
                       SEL      .0060  ENERGY SLOPE
                     ELMAX     1121.0  MAX. ELEV. FOR STORAGE/OUTFLOW CALCULATION

                                     CROSS-SECTION DATA
                       --- LEFT OVERBANK --- + ------ MAIN CHANNEL ------- + --- RIGHT OVERBANK ---
 166 RY       ELEVATION  1121.00   1120.00   1118.00   1116.00   1116.00   1118.00   1120.00   1121.00
 165 RX       DISTANCE       .00    100.00    150.00    170.00    190.00    220.00    280.00    340.00

                                                ***

                                   COMPUTED STORAGE-OUTFLOW-ELEVATION DATA

           STORAGE       .00       .05       .11       .18       .27       .37       .49       .62       .76       .93
           OUTFLOW       .00      6.65     22.69     48.00     83.31    129.47    187.37    257.89    349.75    470.65
         ELEVATION   1116.00   1116.26   1116.53   1116.79   1117.05   1117.32   1117.58   1117.84   1118.11   1118.37

           STORAGE      1.13      1.36      1.62      1.91      2.23      2.58      2.98      3.46      4.03      4.68
           OUTFLOW    613.62    782.00    978.65   1206.20   1467.10   1763.67   2061.75   2418.44   2846.06   3349.85
         ELEVATION   1118.63   1118.90   1119.16   1119.42   1119.68   1119.95   1120.21   1120.47   1120.74   1121.00

*** WARNING *** MODIFIED PULS ROUTING MAY BE NUMERICALLY UNSTABLE FOR OUTFLOWS BETWEEN        23. TO      3350.
                THE ROUTED HYDROGRAPH SHOULD BE EXAMINED FOR OSCILLATIONS OR OUTFLOWS GREATER THAN PEAK INFLOWS.
                THIS CAN BE CORRECTED BY DECREASING THE TIME INTERVAL OR INCREASING STORAGE (USE A LONGER REACH.)

     ***          ***          ***          ***          ***

                    HYDROGRAPH AT STATION   RRHV11

 PEAK FLOW     TIME                             MAXIMUM AVERAGE FLOW
                                       6-HR        24-HR       72-HR     24.92-HR
+   (CFS)      (HR)
                          (CFS)
+     692.     12.17                    91.          26.         25.         25.
                          (INCHES)   1.489        1.718       1.719       1.719
                          (AC-FT)      45.          52.         52.         52.

 PEAK STORAGE  TIME                            MAXIMUM AVERAGE STORAGE
                                       6-HR        24-HR       72-HR     24.92-HR
+  (AC-FT)     (HR)
        1.     12.17                    0.           0.          0.          0.

 PEAK STAGE    TIME                             MAXIMUM AVERAGE STAGE
                                       6-HR        24-HR       72-HR     24.92-HR
+   (FEET)     (HR)
   1118.75     12.17              1116.77      1116.33     1116.32     1116.32

                   CUMULATIVE AREA =       .57 SQ MI

*** *** *** *** *** *** *** *** *** *** *** *** *** *** *** *** *** *** *** *** *** *** *** *** *** *** *** *** *** *** *** *** ***

             **************
             *            *
 167 KK      *    WC22B   *
             *            *
             **************
                         SUB-BASIN WC22B -LAND USE - NATURAL DESERT HILLSLOPES,MINOR DEVELOPMENT
                         24-HOUR TYPE II RAINFALL WAS USED TO FIND TC & R FOR THIS BASIN
                         THIS BASIN USED RAINFALL REDUCTION FACTOR OF .97

              SUBBASIN RUNOFF DATA

 171 BA         SUBBASIN CHARACTERISTICS
                     TAREA        .01  SUBBASIN AREA

                PRECIPITATION DATA

  16 PB                STORM        4.07  BASIN TOTAL PRECIPITATION

  16 PI           INCREMENTAL PRECIPITATION PATTERN
                     .00       .00       .00       .00       .00       .00       .00       .00       .00       .00
                     .00       .00       .00       .00       .00       .00       .00       .00       .00       .00
                     .00       .00       .00       .00       .00       .00       .00       .00       .00       .00
                     .00       .00       .00       .00       .00       .00       .00       .00       .00       .00
                     .00       .00       .00       .00       .00       .00       .00       .00       .00       .00
                     .00       .00       .00       .00       .00       .00       .00       .00       .00       .00
                     .00       .00       .00       .00       .00       .00       .00       .00       .00       .00
                     .00       .00       .00       .00       .00       .00       .00       .00       .00       .00
                     .00       .00       .00       .00       .00       .00       .00       .00       .00       .00
                     .00       .00       .00       .00       .00       .00       .00       .00       .00       .00
                     .00       .00       .00       .00       .00       .00       .00       .00       .00       .00
                     .00       .00       .00       .00       .00       .00       .00       .00       .00       .00
                     .00       .00       .00       .00       .00       .00       .00       .00       .00       .00
                     .00       .00       .00       .00       .00       .00       .00       .00       .00       .00
                     .00       .00       .00       .00       .00       .00       .00       .00       .00       .00
                     .00       .00       .00       .00       .00       .00       .00       .00       .00       .00
                     .00       .00       .00       .00       .00       .00       .01       .01       .01       .01
                     .01       .01       .01       .01       .01       .01       .01       .01       .06       .06
                     .06       .06       .06       .06       .01       .01       .01       .01       .01       .01
                     .01       .01       .01       .01       .01       .01       .00       .00       .00       .00
                     .00       .00       .00       .00       .00       .00       .00       .00       .00       .00
                     .00       .00       .00       .00       .00       .00       .00       .00       .00       .00
                     .00       .00       .00       .00       .00       .00       .00       .00       .00       .00
                     .00       .00       .00       .00       .00       .00       .00       .00       .00       .00
                     .00       .00       .00       .00       .00       .00       .00       .00       .00       .00
                     .00       .00       .00       .00       .00       .00       .00       .00       .00       .00
                     .00       .00       .00       .00       .00       .00       .00       .00       .00       .00
                     .00       .00       .00       .00       .00       .00       .00       .00       .00       .00
                     .00       .00       .00       .00       .00       .00       .00       .00       .00       .00
                     .00       .00       .00       .00       .00       .00       .00       .00       .00       .00
                     .00       .00       .00       .00       .00       .00       .00       .00       .00       .00
                     .00       .00       .00       .00       .00       .00       .00       .00       .00       .00
                     .00       .00       .00       .00       .00       .00       .00       .00

 172 LG         GREEN AND AMPT LOSS RATE
                     STRTL        .15  STARTING LOSS
                       DTH        .26  MOISTURE DEFICIT
                      PSIF       5.80  WETTING FRONT SUCTION
                     XKSAT        .18  HYDRAULIC CONDUCTIVITY
                     RTIMP        .00  PERCENT IMPERVIOUS AREA

 173 UC         CLARK UNITGRAPH
                        TC        .22  TIME OF CONCENTRATION
                         R        .30  STORAGE COEFFICIENT

 174 UA         ACCUMULATED-AREA VS. TIME,  11 ORDINATES
                     .0       3.0       5.0       8.0      12.0      20.0      43.0      75.0      90.0      96.0
                  100.0

                                                ***

                                       UNIT HYDROGRAPH PARAMETERS
                                  CLARK   TC=    .22 HR,       R=   .30 HR
                                  SNYDER  TP=    .22 HR,      CP=   .54

                                            UNIT HYDROGRAPH
                                       21 END-OF-PERIOD ORDINATES
                1.        6.       10.        9.        7.        5.        4.        3.        2.        2.
                1.        1.        1.        1.        0.        0.        0.        0.        0.        0.
                0.

     ***          ***          ***          ***          ***

                         HYDROGRAPH AT STATION    WC22B

   TOTAL RAINFALL =     4.07, TOTAL LOSS =     2.64, TOTAL EXCESS =     1.44

 PEAK FLOW     TIME                             MAXIMUM AVERAGE FLOW
                                       6-HR        24-HR       72-HR     24.92-HR
+   (CFS)      (HR)
                          (CFS)
+       9.     12.08                    1.           0.          0.          0.
                          (INCHES)   1.431        1.431       1.431       1.431
                          (AC-FT)       1.           1.          1.          1.

                   CUMULATIVE AREA =       .01 SQ MI

*** *** *** *** *** *** *** *** *** *** *** *** *** *** *** *** *** *** *** *** *** *** *** *** *** *** *** *** *** *** *** *** ***

             **************
             *            *
 176 KK      *   RRHV12   *
             *            *
             **************
                         ROUTE FLOW FROM SUB-BASIN WC22B TO COMPUTATION POINT CPHV5

              HYDROGRAPH ROUTING DATA

 178 RS         STORAGE ROUTING
                     NSTPS          3  NUMBER OF SUBREACHES
                      ITYP       ELEV  TYPE OF INITIAL CONDITION
                    RSVRIC    1123.50  INITIAL CONDITION
                         X        .00 WORKING R AND D COEFFICIENT

 179 RC         NORMAL DEPTH CHANNEL
                       ANL       .035  LEFT OVERBANK N-VALUE
                      ANCH       .040  MAIN CHANNEL N-VALUE
                       ANR       .035  RIGHT OVERBANK N-VALUE
                     RLNTH      1020.  REACH LENGTH
                       SEL      .0230  ENERGY SLOPE
                     ELMAX     1124.5  MAX. ELEV. FOR STORAGE/OUTFLOW CALCULATION

                                     CROSS-SECTION DATA
```

```
                    --- LEFT OVERBANK --- + ------ MAIN CHANNEL ------- + --- RIGHT OVERBANK ---
181 RY      ELEVATION  1124.50  1124.00  1123.50  1123.50  1123.50  1123.50  1124.00  1124.50
180 RX      DISTANCE       .00    30.00    70.00    90.00   100.00   120.00   135.00   160.00

                                          ***

                          COMPUTED STORAGE-OUTFLOW-ELEVATION DATA

          STORAGE       .00      .07      .14      .22      .30      .40      .50      .61      .72      .84
          OUTFLOW       .00     2.17     7.18    14.65    24.54    36.86    51.67    69.04    89.02   111.72
        ELEVATION   1123.50  1123.55  1123.61  1123.66  1123.71  1123.76  1123.82  1123.87  1123.92  1123.97

          STORAGE       .97     1.11     1.25     1.40     1.56     1.73     1.90     2.08     2.26     2.46
          OUTFLOW    137.21   165.61   197.01   231.46   269.05   309.86   353.96   401.44   452.38   506.86
        ELEVATION   1124.03  1124.08  1124.13  1124.18  1124.24  1124.29  1124.34  1124.39  1124.45  1124.50

 *** WARNING *** MODIFIED PULS ROUTING MAY BE NUMERICALLY UNSTABLE FOR OUTFLOWS BETWEEN       15. TO      507.
                 THE ROUTED HYDROGRAPH SHOULD BE EXAMINED FOR OSCILLATIONS OR OUTFLOWS GREATER THAN PEAK INFLOWS.
                 THIS CAN BE CORRECTED BY DECREASING THE TIME INTERVAL OR INCREASING STORAGE (USE A LONGER REACH.)

      ***             ***             ***             ***             ***

                          HYDROGRAPH AT STATION   RRHV12

  PEAK FLOW     TIME                          MAXIMUM AVERAGE FLOW
                                      6-HR        24-HR        72-HR       24.92-HR
+   (CFS)       (HR)
                          (CFS)
+       9.      12.25                1.           0.           0.           0.
                          (INCHES)  1.431        1.431        1.431        1.431
                          (AC-FT)      1.           1.           1.           1.

  PEAK STORAGE  TIME                          MAXIMUM AVERAGE STORAGE
                                      6-HR        24-HR        72-HR       24.92-HR
+   (AC-FT)     (HR)
          0.    12.17                  0.           0.           0.           0.

  PEAK STAGE    TIME                          MAXIMUM AVERAGE STAGE
                                      6-HR        24-HR        72-HR       24.92-HR
+   (FEET)      (HR)
    1123.62     12.25             1123.52      1123.50      1123.50      1123.50

                          CUMULATIVE AREA =     .01 SQ MI

*** *** *** *** *** *** *** *** *** *** *** *** *** *** *** *** *** *** *** *** *** *** *** *** *** *** *** *** *** *** *** *** ***

              **************
              *            *
182 KK        *     CPHV5  *
              *            *
              **************
                          COMBINE ROUTED FLOWS FROM SUB-BASIN WC22B AND  COMPUTATION POINT CPHV4

184 HC              HYDROGRAPH COMBINATION
                         ICOMP           2  NUMBER OF HYDROGRAPHS TO COMBINE

                                                    ***

      ***             ***             ***             ***             ***

                          HYDROGRAPH AT STATION    CPHV5

  PEAK FLOW     TIME                          MAXIMUM AVERAGE FLOW
                                      6-HR        24-HR        72-HR       24.92-HR
+   (CFS)       (HR)
                          (CFS)
+     700.      12.17                 92.          26.          25.          25.
                          (INCHES)  1.488        1.714        1.716        1.716
                          (AC-FT)      45.          52.          52.          52.

                          CUMULATIVE AREA =     .57 SQ MI

*** *** *** *** *** *** *** *** *** *** *** *** *** *** *** *** *** *** *** *** *** *** *** *** *** *** *** *** *** *** *** *** ***

              **************
              *            *
185 KK        *    RRHV13  *
              *            *
              **************
                          ROUTE FLOW FROM COMPUTATION CPHV5 TO COMPUTATION POINT CPHV6

                    HYDROGRAPH ROUTING DATA

187 RS              STORAGE ROUTING
                         NSTPS           1  NUMBER OF SUBREACHES
                          ITYP        ELEV  TYPE OF INITIAL CONDITION
                         RSVRIC     1114.00  INITIAL CONDITION
                              X         .00 WORKING R AND D COEFFICIENT

188 RC              NORMAL DEPTH CHANNEL
                           ANL        .035  LEFT OVERBANK N-VALUE
                          ANCH        .040  MAIN CHANNEL N-VALUE
                           ANR        .035  RIGHT OVERBANK N-VALUE
                         RLNTH        430.  REACH LENGTH
                           SEL       .0050  ENERGY SLOPE
                         ELMAX      1116.0  MAX. ELEV. FOR STORAGE/OUTFLOW CALCULATION

                                CROSS-SECTION DATA
                    --- LEFT OVERBANK --- + ------ MAIN CHANNEL ------- + --- RIGHT OVERBANK ---
190 RY      ELEVATION  1117.00  1116.00  1116.00  1114.00  1114.00  1115.00  1115.00  1116.00
189 RX      DISTANCE       .00    70.00   130.00   160.00   180.00   220.00   340.00   410.00

                                          ***

                          COMPUTED STORAGE-OUTFLOW-ELEVATION DATA

          STORAGE       .00      .02      .05      .09      .13      .18      .23      .29      .36      .43
          OUTFLOW       .00     1.31     4.42     9.27    15.96    24.64    35.44    48.52    64.03    82.11
        ELEVATION   1114.00  1114.11  1114.21  1114.32  1114.42  1114.53  1114.63  1114.74  1114.84  1114.95

          STORAGE       .57      .78     1.00     1.23     1.47     1.72     1.98     2.25     2.53     2.81
          OUTFLOW    107.25   148.35   200.99   264.03   336.94   419.44   511.41   612.79   723.56   843.78
        ELEVATION   1115.05  1115.16  1115.26  1115.37  1115.47  1115.58  1115.68  1115.79  1115.89  1116.00

 *** WARNING *** MODIFIED PULS ROUTING MAY BE NUMERICALLY UNSTABLE FOR OUTFLOWS BETWEEN      264. TO      844.
                 THE ROUTED HYDROGRAPH SHOULD BE EXAMINED FOR OSCILLATIONS OR OUTFLOWS GREATER THAN PEAK INFLOWS.
                 THIS CAN BE CORRECTED BY DECREASING THE TIME INTERVAL OR INCREASING STORAGE (USE A LONGER REACH.)

      ***             ***             ***             ***             ***

                          HYDROGRAPH AT STATION   RRHV13

  PEAK FLOW     TIME                          MAXIMUM AVERAGE FLOW
                                      6-HR        24-HR        72-HR       24.92-HR
+   (CFS)       (HR)
                          (CFS)
+     686.      12.17                 92.          26.          25.          25.
                          (INCHES)  1.488        1.714        1.715        1.715
                          (AC-FT)      45.          52.          52.          52.

  PEAK STORAGE  TIME                          MAXIMUM AVERAGE STORAGE
                                      6-HR        24-HR        72-HR       24.92-HR
+   (AC-FT)     (HR)
          2.    12.17                  0.           0.           0.           0.

  PEAK STAGE    TIME                          MAXIMUM AVERAGE STAGE
                                      6-HR        24-HR        72-HR       24.92-HR
+   (FEET)      (HR)
    1115.86     12.17             1114.65      1114.32      1114.31      1114.31

                          CUMULATIVE AREA =     .57 SQ MI

*** *** *** *** *** *** *** *** *** *** *** *** *** *** *** *** *** *** *** *** *** *** *** *** *** *** *** *** *** *** *** *** ***

              **************
              *            *
191 KK        *    WC23B   *
              *            *
              **************
                          SUB-BASIN WC23B -LAND USE - DESERT MOUNTAIN,DESERT HILLS;MINOR DEVELOPMENT
                          24-HOUR TYPE II RAINFALL WAS USED TO FIND TC & R FOR THIS BASIN
                          THIS BASIN USED RAINFALL REDUCTION FACTOR OF .97

                    SUBBASIN RUNOFF DATA

195 BA              SUBBASIN CHARACTERISTICS
                         TAREA         .40  SUBBASIN AREA

                    PRECIPITATION DATA

 16 PB                    STORM        4.07  BASIN TOTAL PRECIPITATION

 16 PI              INCREMENTAL PRECIPITATION PATTERN
                       .00      .00      .00      .00      .00      .00      .00      .00      .00      .00
                       .00      .00      .00      .00      .00      .00      .00      .00      .00      .00
                       .00      .00      .00      .00      .00      .00      .00      .00      .00      .00
                       .00      .00      .00      .00      .00      .00      .00      .00      .00      .00
                       .00      .00      .00      .00      .00      .00      .00      .00      .00      .00
                       .00      .00      .00      .00      .00      .00      .00      .00      .00      .00
                       .00      .00      .00      .00      .00      .00      .00      .00      .00      .00
                       .00      .00      .00      .00      .00      .00      .00      .00      .00      .00
                       .00      .00      .00      .00      .00      .00      .00      .00      .00      .00
                       .00      .00      .00      .00      .00      .00      .00      .00      .00      .00
                       .00      .00      .00      .00      .00      .00      .00      .00      .00      .00
                       .00      .00      .00      .00      .00      .00      .01      .01      .01      .01
```

```
      .01     .01     .01     .01     .01     .01     .01     .01     .06     .06
      .06     .06     .06     .06     .01     .01     .01     .01     .01     .01
      .01     .01     .01     .01     .01     .01     .00     .00     .00     .00
      .00     .00     .00     .00     .00     .00     .00     .00     .00     .00
      .00     .00     .00     .00     .00     .00     .00     .00     .00     .00
      .00     .00     .00     .00     .00     .00     .00     .00     .00     .00
      .00     .00     .00     .00     .00     .00     .00     .00     .00     .00
      .00     .00     .00     .00     .00     .00     .00     .00     .00     .00
      .00     .00     .00     .00     .00     .00     .00     .00     .00     .00
      .00     .00     .00     .00     .00     .00     .00     .00     .00     .00
      .00     .00     .00     .00     .00     .00     .00     .00     .00     .00
      .00     .00     .00     .00     .00     .00     .00     .00     .00     .00
      .00     .00     .00     .00     .00     .00     .00     .00     .00     .00
      .00     .00     .00     .00     .00     .00     .00     .00     .00     .00
      .00     .00     .00     .00     .00     .00     .00     .00     .00     .00
      .00     .00     .00     .00     .00     .00     .00     .00

196 LG    GREEN AND AMPT LOSS RATE
            STRTL      .15  STARTING LOSS
              DTH      .30  MOISTURE DEFICIT
             PSIF     4.12  WETTING FRONT SUCTION
            XKSAT      .25  HYDRAULIC CONDUCTIVITY
            RTIMP    60.00  PERCENT IMPERVIOUS AREA

197 UC    CLARK UNITGRAPH
               TC      .30  TIME OF CONCENTRATION
                R      .25  STORAGE COEFFICIENT

198 UA    ACCUMULATED-AREA VS. TIME,  11 ORDINATES
             .0     3.0     5.0     8.0    12.0    20.0    43.0    75.0    90.0    96.0
          100.0

                                        ***

                                  UNIT HYDROGRAPH PARAMETERS
                              CLARK   TC=   .30 HR,       R=   .25 HR
                             SNYDER   TP=   .28 HR,      CP=   .74

                                    UNIT HYDROGRAPH
                                18 END-OF-PERIOD ORDINATES
          33.     170.     499.     656.     502.     357.     254.     181.     129.      91.
          65.      46.      33.      23.      17.      12.       8.       6.

   ***            ***             ***             ***             ***

              HYDROGRAPH AT STATION    WC23B

   TOTAL RAINFALL =    4.07, TOTAL LOSS =    1.09, TOTAL EXCESS =    2.98

  PEAK FLOW     TIME                      MAXIMUM AVERAGE FLOW
                                    6-HR       24-HR       72-HR      24.92-HR
+   (CFS)       (HR)
                        (CFS)
+     604.    12.17               97.         32.         31.          31.
                      (INCHES)    2.251       2.961       2.965        2.965
                      (AC-FT)     48.         63.         63.          63.

                      CUMULATIVE AREA =     .40 SQ MI


*** *** *** *** *** *** *** *** *** *** *** *** *** *** *** *** *** *** *** *** *** *** *** *** *** *** *** *** *** *** *** *** *** *** ***


            **************
            *            *
200 KK      *    RRHV14  *
            *            *
            **************
                     ROUTE FLOW FROM SUB-BASIN WC23B AND T0 COMPUTATION POINT CPHV6

          HYDROGRAPH ROUTING DATA

202 RS      STORAGE ROUTING
                 NSTPS         1  NUMBER OF SUBREACHES
                  ITYP      ELEV  TYPE OF INITIAL CONDITION
                RSVRIC   1120.00  INITIAL CONDITION
                     X       .00 WORKING R AND D COEFFICIENT

203 RC      NORMAL DEPTH CHANNEL
                   ANL      .035  LEFT OVERBANK N-VALUE
                  ANCH      .035  MAIN CHANNEL N-VALUE
                   ANR      .035  RIGHT OVERBANK N-VALUE
                 RLNTH     1020.  REACH LENGTH
                   SEL     .0270  ENERGY SLOPE
                 ELMAX    1122.5  MAX. ELEV. FOR STORAGE/OUTFLOW CALCULATION

                                  CROSS-SECTION DATA
                          --- LEFT OVERBANK --- + ------ MAIN CHANNEL ------- + --- RIGHT OVERBANK ---
205 RY      ELEVATION   1122.50   1122.00   1121.50   1120.00   1120.00   1121.50   1122.00   1122.50
204 RX      DISTANCE        .00     40.00     80.00    100.00    120.00    140.00    170.00    210.00

                                        ***
```

```
                  COMPUTED STORAGE-OUTFLOW-ELEVATION DATA

     STORAGE        .00       .07       .14       .23       .33       .44       .56       .70       .84       .99
     OUTFLOW        .00      4.92     16.19     33.07     55.56     83.82    118.10    158.67    205.82    259.84
   ELEVATION    1120.00   1120.13   1120.26   1120.39   1120.53   1120.66   1120.79   1120.92   1121.05   1121.18

     STORAGE       1.16      1.33      1.53      1.77      2.08      2.44      2.86      3.34      3.89      4.51
     OUTFLOW     321.03    389.66    476.25    581.35    702.36    842.26   1002.95   1188.27   1401.09   1643.94
   ELEVATION    1121.32   1121.45   1121.58   1121.71   1121.84   1121.97   1122.11   1122.24   1122.37   1122.50

 *** WARNING *** MODIFIED PULS ROUTING MAY BE NUMERICALLY UNSTABLE FOR OUTFLOWS BETWEEN      118. TO     1644.
                 THE ROUTED HYDROGRAPH SHOULD BE EXAMINED FOR OSCILLATIONS OR OUTFLOWS GREATER THAN PEAK INFLOWS.
                 THIS CAN BE CORRECTED BY DECREASING THE TIME INTERVAL OR INCREASING STORAGE (USE A LONGER REACH.)

      ***             ***             ***             ***             ***

                  HYDROGRAPH AT STATION   RRHV14

  PEAK FLOW     TIME                      MAXIMUM AVERAGE FLOW
                                    6-HR       24-HR       72-HR      24.92-HR
+   (CFS)       (HR)
                        (CFS)
+     604.    12.17               97.         32.         31.          31.
                      (INCHES)    2.250       2.960       2.964        2.964
                      (AC-FT)     48.         63.         63.          63.

  PEAK STORAGE  TIME                      MAXIMUM AVERAGE STORAGE
                                    6-HR       24-HR       72-HR      24.92-HR
+ (AC-FT)       (HR)
          2.    12.17                0.          0.          0.           0.

  PEAK STAGE    TIME                      MAXIMUM AVERAGE STAGE
                                    6-HR       24-HR       72-HR      24.92-HR
+   (FEET)      (HR)
    1121.74     12.17           1120.57     1120.29     1120.28      1120.28

                      CUMULATIVE AREA =     .40 SQ MI


*** *** *** *** *** *** *** *** *** *** *** *** *** *** *** *** *** *** *** *** *** *** *** *** *** *** *** *** *** *** *** *** *** *** ***


            **************
            *            *
206 KK      *     CPHV6  *
            *            *
            **************
                     COMBINE ROUTED FLOWS FROM SUB-BASIN WC23B AND  COMPUTATION POINT CPHV5

208 HC      HYDROGRAPH COMBINATION
                 ICOMP         2  NUMBER OF HYDROGRAPHS TO COMBINE

                                        ***

      ***             ***             ***             ***             ***

                  HYDROGRAPH AT STATION    CPHV6

  PEAK FLOW     TIME                      MAXIMUM AVERAGE FLOW
                                    6-HR       24-HR       72-HR      24.92-HR
+   (CFS)       (HR)
                        (CFS)
+    1290.    12.17              189.         58.         56.          56.
                      (INCHES)    1.801       2.226       2.229        2.229
                      (AC-FT)     93.         115.        116.         116.

                      CUMULATIVE AREA =     .97 SQ MI


*** *** *** *** *** *** *** *** *** *** *** *** *** *** *** *** *** *** *** *** *** *** *** *** *** *** *** *** *** *** *** *** *** *** ***


            **************
            *            *
209 KK      *    RRHV15  *
            *            *
            **************
                     ROUTE FLOW FROM COMPUTATION CPHV6 TO COMPUTATION POINT CPHV7

          HYDROGRAPH ROUTING DATA

211 RS      STORAGE ROUTING
                 NSTPS         2  NUMBER OF SUBREACHES
                  ITYP      ELEV  TYPE OF INITIAL CONDITION
                RSVRIC   1105.00  INITIAL CONDITION
                     X       .00 WORKING R AND D COEFFICIENT

212 RC      NORMAL DEPTH CHANNEL
                   ANL      .035  LEFT OVERBANK N-VALUE
                  ANCH      .040  MAIN CHANNEL N-VALUE
```

ANR .035 RIGHT OVERBANK N-VALUE
RLNTH 1980. REACH LENGTH
SEL .0080 ENERGY SLOPE
ELMAX 1110.0 MAX. ELEV. FOR STORAGE/OUTFLOW CALCULATION

CROSS-SECTION DATA

		--- LEFT OVERBANK --- +		------ MAIN CHANNEL ------- +			--- RIGHT OVERBANK ---		
214 RY	ELEVATION	1110.00	1106.00	1106.00	1105.00	1105.00	1106.00	1108.00	1110.00
213 RX	DISTANCE	.00	170.00	430.00	470.00	490.00	530.00	580.00	630.00

***

COMPUTED STORAGE-OUTFLOW-ELEVATION DATA

STORAGE	.00	.37	.98	1.85	3.59	8.05	12.72	17.60	22.69	28.00
OUTFLOW	.00	9.02	35.61	84.29	170.98	435.52	850.41	1394.77	2059.94	2841.40
ELEVATION	1105.00	1105.26	1105.53	1105.79	1106.05	1106.32	1106.58	1106.84	1107.11	1107.37
STORAGE	33.52	39.25	45.19	51.34	57.71	64.29	71.09	78.09	85.31	92.74
OUTFLOW	3736.68	4744.49	5864.36	7096.32	8440.79	9898.49	11470.33	13157.39	14960.88	16882.58
ELEVATION	1107.63	1107.90	1108.16	1108.42	1108.68	1108.95	1109.21	1109.47	1109.74	1110.00

*** WARNING *** MODIFIED PULS ROUTING MAY BE NUMERICALLY UNSTABLE FOR OUTFLOWS BETWEEN 2060. TO 16883.
THE ROUTED HYDROGRAPH SHOULD BE EXAMINED FOR OSCILLATIONS OR OUTFLOWS GREATER THAN PEAK INFLOWS.
THIS CAN BE CORRECTED BY DECREASING THE TIME INTERVAL OR INCREASING STORAGE (USE A LONGER REACH.)

*** *** *** *** ***

HYDROGRAPH AT STATION RRHV15

PEAK FLOW	TIME		MAXIMUM AVERAGE FLOW			
			6-HR	24-HR	72-HR	24.92-HR
+ (CFS)	(HR)					
		(CFS)				
+ 1217.	12.25		188.	58.	56.	56.
		(INCHES)	1.801	2.224	2.225	2.225
		(AC-FT)	93.	115.	115.	115.

PEAK STORAGE	TIME	MAXIMUM AVERAGE STORAGE			
		6-HR	24-HR	72-HR	24.92-HR
+ (AC-FT)	(HR)				
8.	12.25	2.	1.	1.	1.

PEAK STAGE	TIME	MAXIMUM AVERAGE STAGE			
		6-HR	24-HR	72-HR	24.92-HR
+ (FEET)	(HR)				
1106.76	12.25	1105.79	1105.43	1105.42	1105.42

CUMULATIVE AREA = .97 SQ MI

*** ***

215 KK * PM5B *

SUB-BASIN PM5B -LAND USE - NATURAL DESERT HILLSLOPES,MINOR DEVELOPMENT
24-HOUR TYPE II RAINFALL WAS USED TO FIND TC & R FOR THIS BASIN
THIS BASIN USED RAINFALL REDUCTION FACTOR OF .97

SUBBASIN RUNOFF DATA

219 BA SUBBASIN CHARACTERISTICS
TAREA .13 SUBBASIN AREA

PRECIPITATION DATA

16 PB STORM 4.07 BASIN TOTAL PRECIPITATION

16 PI INCREMENTAL PRECIPITATION PATTERN

.00	.00	.00	.00	.00	.00	.00	.00	.00	.00
.00	.00	.00	.00	.00	.00	.00	.00	.00	.00
.00	.00	.00	.00	.00	.00	.00	.00	.00	.00
.00	.00	.00	.00	.00	.00	.00	.00	.00	.00
.00	.00	.00	.00	.00	.00	.00	.00	.00	.00
.00	.00	.00	.00	.00	.00	.00	.00	.00	.00
.00	.00	.00	.00	.00	.00	.00	.00	.00	.00
.00	.00	.00	.00	.00	.00	.00	.00	.00	.00
.00	.00	.00	.00	.00	.00	.00	.00	.00	.00
.00	.00	.00	.00	.00	.00	.00	.00	.00	.00
.00	.00	.00	.00	.00	.00	.00	.00	.00	.00
.00	.00	.00	.00	.00	.00	.00	.00	.00	.00
.00	.00	.00	.00	.00	.00	.01	.01	.01	.01
.01	.01	.01	.01	.01	.01	.01	.01	.06	.06
.06	.06	.06	.06	.01	.01	.01	.01	.01	.01
.01	.01	.01	.01	.01	.01	.00	.00	.00	.00
.00	.00	.00	.00	.00	.00	.00	.00	.00	.00
.00	.00	.00	.00	.00	.00	.00	.00	.00	.00
.00	.00	.00	.00	.00	.00	.00	.00	.00	.00
.00	.00	.00	.00	.00	.00	.00	.00	.00	.00
.00	.00	.00	.00	.00	.00	.00	.00	.00	.00
.00	.00	.00	.00	.00	.00	.00	.00	.00	.00
.00	.00	.00	.00	.00	.00	.00	.00	.00	.00
.00	.00	.00	.00	.00	.00	.00	.00	.00	.00
.00	.00	.00	.00	.00	.00	.00	.00	.00	.00
.00	.00	.00	.00	.00	.00	.00	.00	.00	.00
.00	.00	.00	.00	.00	.00	.00	.00	.00	.00
.00	.00	.00	.00	.00	.00	.00	.00	.00	.00
.00	.00	.00	.00	.00	.00	.00	.00	.00	.00
.00	.00	.00	.00	.00	.00	.00	.00		

220 LG GREEN AND AMPT LOSS RATE
STRTL .15 STARTING LOSS
DTH .31 MOISTURE DEFICIT
PSIF 4.20 WETTING FRONT SUCTION
XKSAT .52 HYDRAULIC CONDUCTIVITY
RTIMP 15.00 PERCENT IMPERVIOUS AREA

221 UC CLARK UNITGRAPH
TC .43 TIME OF CONCENTRATION
R .31 STORAGE COEFFICIENT

222 UA ACCUMULATED-AREA VS. TIME, 11 ORDINATES

.0	3.0	5.0	8.0	12.0	20.0	43.0	75.0	90.0	96.0
100.0									

***

UNIT HYDROGRAPH PARAMETERS
CLARK TC= .43 HR, R= .31 HR
SNYDER TP= .39 HR, CP= .81

UNIT HYDROGRAPH
23 END-OF-PERIOD ORDINATES

6.	18.	53.	130.	172.	148.	115.	87.	66.	51.
38.	29.	22.	17.	13.	10.	7.	6.	4.	3.
3.	2.	1.							

*** *** *** *** ***

HYDROGRAPH AT STATION PM5B

TOTAL RAINFALL = 4.07, TOTAL LOSS = 2.60, TOTAL EXCESS = 1.48

PEAK FLOW	TIME		MAXIMUM AVERAGE FLOW			
			6-HR	24-HR	72-HR	24.92-HR
+ (CFS)	(HR)					
		(CFS)				
+ 134.	12.25		18.	5.	5.	5.
		(INCHES)	1.293	1.471	1.472	1.472
		(AC-FT)	9.	10.	10.	10.

CUMULATIVE AREA = .13 SQ MI

*** ***

224 KK * CPHV7 *

COMBINE ROUTED FLOWS FROM SUB-BASIN PM5B AND COMPUTATION POINT CPHV6

226 HC HYDROGRAPH COMBINATION
ICOMP 2 NUMBER OF HYDROGRAPHS TO COMBINE

***

*** *** *** *** ***

HYDROGRAPH AT STATION CPHV7

PEAK FLOW	TIME		MAXIMUM AVERAGE FLOW			
			6-HR	24-HR	72-HR	24.92-HR
+ (CFS)	(HR)					
		(CFS)				
+ 1351.	12.25		207.	63.	61.	61.
		(INCHES)	1.741	2.135	2.136	2.136
		(AC-FT)	102.	126.	126.	126.

CUMULATIVE AREA = 1.10 SQ MI

*** ***

227 KK * HV7BSN *

*   *
****

***************BASIN AT CARVER ROAD AND WASH********************************

DETENTION BASIN AT THIS SITE TO ATTENUATE FLOWS INTO THE HIDDEN VALLEY AREA
THE BASIN HAS A 20 ACRE TOP AREA AND A 15.9 AC BOTTOM AREA AND 10 FEET DEEP

HYDROGRAPH ROUTING DATA

231 RS   STORAGE ROUTING

	NSTPS	1	NUMBER OF SUBREACHES
	ITYP	ELEV	TYPE OF INITIAL CONDITION
	RSVRIC	.00	INITIAL CONDITION
	X	.00	WORKING R AND D COEFFICIENT

232 SA	AREA	15.9	16.7	17.5	18.3	19.1	20.0
233 SQ	DISCHARGE	0.	20.	20.	20.	20.	20.
234 SE	ELEVATION	.00	2.00	4.00	6.00	8.00	10.00

***

COMPUTED STORAGE-ELEVATION DATA

STORAGE	.00	32.60	66.79	102.59	139.99	179.08
ELEVATION	.00	2.00	4.00	6.00	8.00	10.00

***   ***   ***   ***   ***

HYDROGRAPH AT STATION   HV7BSN

PEAK FLOW	TIME		MAXIMUM AVERAGE FLOW			
			6-HR	24-HR	72-HR	24.92-HR
+ (CFS)	(HR)					
		(CFS)				
+ 20.	12.17		20.	12.	12.	12.
		(INCHES)	.169	.417	.417	.417
		(AC-FT)	10.	25.	25.	25.

PEAK STORAGE	TIME	MAXIMUM AVERAGE STORAGE			
		6-HR	24-HR	72-HR	24.92-HR
+ (AC-FT)	(HR)				
105.	17.83	105.	56.	54.	54.

PEAK STAGE	TIME	MAXIMUM AVERAGE STAGE			
		6-HR	24-HR	72-HR	24.92-HR
+ (FEET)	(HR)				
6.13	17.92	6.11	3.31	3.19	3.19

CUMULATIVE AREA =   1.10 SQ MI

*** ***

****
*   *
235 KK   *   RRHV16   *
*   *
****

ROUTE OUTFLOW FROM BASIN IN STORM DRAIN TO 47TH AVE. AND ESTRELLA DRIVE
THE FLOW DISCHARGES TO SRP DRAIN DITCH

HYDROGRAPH ROUTING DATA

238 RK   KINEMATIC WAVE STREAM ROUTING

L	5200.	CHANNEL LENGTH
S	.0046	SLOPE
N	.013	CHANNEL ROUGHNESS COEFFICIENT
CA	.00	CONTRIBUTING AREA
SHAPE	CIRC	CHANNEL SHAPE
WD	3.00	BOTTOM WIDTH OR DIAMETER
Z	.00	SIDE SLOPE
NDXMIN	2	MINIMUM NUMBER OF DX INTERVALS

***

COMPUTED KINEMATIC PARAMETERS
VARIABLE TIME STEP
(DT SHOWN IS A MINIMUM)

ELEMENT	ALPHA	M	DT (MIN)	DX (FT)	PEAK (CFS)	TIME TO PEAK (MIN)	VOLUME (IN)	MAXIMUM CELERITY (FPS)
MAIN	5.04	1.25	3.48	1733.33	20.00	744.84	.41	8.30

CONTINUITY SUMMARY (AC-FT) - INFLOW= .2456E+02 EXCESS= .0000E+00 OUTFLOW= .2437E+02 BASIN STORAGE= .2038E+00 PERCENT ERROR= -.1

INTERPOLATED TO SPECIFIED COMPUTATION INTERVAL

MAIN	5.04	1.25	5.00		20.00	745.00	.41

***   ***   ***   ***   ***

HYDROGRAPH AT STATION   RRHV16

PEAK FLOW	TIME		MAXIMUM AVERAGE FLOW			
			6-HR	24-HR	72-HR	24.92-HR
+ (CFS)	(HR)					
		(CFS)				
+ 20.	12.42		20.	12.	12.	12.
		(INCHES)	.169	.413	.413	.413
		(AC-FT)	10.	24.	24.	24.

CUMULATIVE AREA =   1.10 SQ MI

*** ***

****
*   *
239 KK   *   A43A2B   *
*   *
****

SUB-BASIN A43A2B -LAND USE - DESERT MOUNTAIN,DESERT HILLS;MINOR DEVELOPMENT
24-HOUR TYPE II RAINFALL WAS USED TO FIND TC & R FOR THIS BASIN
THIS BASIN USED RAINFALL REDUCTION FACTOR OF .97

SUBBASIN RUNOFF DATA

243 BA   SUBBASIN CHARACTERISTICS
TAREA   .09   SUBBASIN AREA

PRECIPITATION DATA

16 PB   STORM   4.07   BASIN TOTAL PRECIPITATION

16 PI   INCREMENTAL PRECIPITATION PATTERN

.00	.00	.00	.00	.00	.00	.00	.00	.00	.00
.00	.00	.00	.00	.00	.00	.00	.00	.00	.00
.00	.00	.00	.00	.00	.00	.00	.00	.00	.00
.00	.00	.00	.00	.00	.00	.00	.00	.00	.00
.00	.00	.00	.00	.00	.00	.00	.00	.00	.00
.00	.00	.00	.00	.00	.00	.00	.00	.00	.00
.00	.00	.00	.00	.00	.00	.00	.00	.00	.00
.00	.00	.00	.00	.00	.00	.00	.00	.00	.00
.00	.00	.00	.00	.00	.00	.00	.00	.00	.00
.00	.00	.00	.00	.00	.00	.00	.00	.00	.00
.00	.00	.00	.00	.00	.00	.00	.00	.00	.00
.00	.00	.00	.00	.00	.00	.00	.00	.00	.00
.00	.00	.00	.00	.00	.00	.01	.01	.01	.01
.01	.01	.01	.01	.01	.01	.01	.01	.06	.06
.06	.06	.06	.06	.01	.01	.01	.01	.01	.01
.01	.01	.01	.01	.01	.01	.00	.00	.00	.00
.00	.00	.00	.00	.00	.00	.00	.00	.00	.00
.00	.00	.00	.00	.00	.00	.00	.00	.00	.00
.00	.00	.00	.00	.00	.00	.00	.00	.00	.00
.00	.00	.00	.00	.00	.00	.00	.00	.00	.00
.00	.00	.00	.00	.00	.00	.00	.00	.00	.00
.00	.00	.00	.00	.00	.00	.00	.00	.00	.00
.00	.00	.00	.00	.00	.00	.00	.00	.00	.00
.00	.00	.00	.00	.00	.00	.00	.00	.00	.00
.00	.00	.00	.00	.00	.00	.00	.00	.00	.00
.00	.00	.00	.00	.00	.00	.00	.00	.00	.00
.00	.00	.00	.00	.00	.00	.00	.00	.00	.00
.00	.00	.00	.00	.00	.00	.00	.00	.00	.00
.00	.00	.00	.00	.00	.00	.00	.00		

244 LG   GREEN AND AMPT LOSS RATE

STRTL	.15	STARTING LOSS
DTH	.28	MOISTURE DEFICIT
PSIF	6.30	WETTING FRONT SUCTION
XKSAT	.17	HYDRAULIC CONDUCTIVITY
RTIMP	30.00	PERCENT IMPERVIOUS AREA

245 UC   CLARK UNITGRAPH

TC	.32	TIME OF CONCENTRATION
R	.27	STORAGE COEFFICIENT

246 UA   ACCUMULATED-AREA VS. TIME, 11 ORDINATES

.0	3.0	5.0	8.0	12.0	20.0	43.0	75.0	90.0	96.0
100.0									

***

UNIT HYDROGRAPH PARAMETERS
CLARK   TC= .32 HR,   R= .27 HR
SNYDER   TP= .30 HR,   CP= .74

UNIT HYDROGRAPH
20 END-OF-PERIOD ORDINATES

6.	29.	96.	139.	113.	83.	61.	45.	33.	24.

```
                18.       13.       10.        7.        5.        4.        3.        2.        2.        1.

      ***             ***             ***             ***             ***

                        HYDROGRAPH AT STATION   A43A2B

     TOTAL RAINFALL =    4.07, TOTAL LOSS =    1.86, TOTAL EXCESS =    2.21

  PEAK FLOW     TIME                        MAXIMUM AVERAGE FLOW
                                    6-HR       24-HR       72-HR      24.92-HR
+   (CFS)       (HR)
                 (CFS)
+     127.     12.17                18.          5.          5.          5.
                (INCHES)          1.845       2.200       2.202       2.202
                (AC-FT)             9.          11.         11.         11.

                CUMULATIVE AREA =     .09 SQ MI


*** *** *** *** *** *** *** *** *** *** *** *** *** *** *** *** *** *** *** *** *** *** *** *** *** *** *** *** *** *** *** *** *** *** ***


          **************
          *            *
248 KK    *    RRHV17  *
          *            *
          **************
                        ROUTE FLOW FROM SUB-BASIN A43A2B TO COMPUTATION POINT CPHV8

     HYDROGRAPH ROUTING DATA

250 RS          STORAGE ROUTING
                     NSTPS          1  NUMBER OF SUBREACHES
                      ITYP       ELEV  TYPE OF INITIAL CONDITION
                     RSVRIC    1099.00  INITIAL CONDITION
                          X        .00 WORKING R AND D COEFFICIENT

251 RC          NORMAL DEPTH CHANNEL
                       ANL       .065  LEFT OVERBANK N-VALUE
                      ANCH       .065  MAIN CHANNEL N-VALUE
                       ANR       .065  RIGHT OVERBANK N-VALUE
                     RLNTH       440.  REACH LENGTH
                       SEL      .0150  ENERGY SLOPE
                     ELMAX    1100.0  MAX. ELEV. FOR STORAGE/OUTFLOW CALCULATION

                                CROSS-SECTION DATA
                          --- LEFT OVERBANK --- + ------ MAIN CHANNEL ------- + --- RIGHT OVERBANK ---
253 RY       ELEVATION  1100.00   1099.00   1099.00   1099.00   1099.00   1099.00   1099.00   1100.00
252 RX       DISTANCE        .00     105.00    135.00    165.00    190.00    210.00    260.00    320.00

                                          ***

                                COMPUTED STORAGE-OUTFLOW-ELEVATION DATA

          STORAGE        .00       .08       .17       .27       .37       .47       .58       .69       .81       .93
          OUTFLOW        .00      3.25     10.43     20.76     33.96     49.93     68.58     89.89    113.86    140.49
        ELEVATION    1099.00   1099.05   1099.11   1099.16   1099.21   1099.26   1099.32   1099.37   1099.42   1099.47

          STORAGE       1.05      1.19      1.32      1.46      1.61      1.75      1.91      2.07      2.23      2.40
          OUTFLOW     169.79    201.78    236.50    273.97    314.23    357.30    403.24    452.07    503.84    558.59
        ELEVATION    1099.53   1099.58   1099.63   1099.68   1099.74   1099.79   1099.84   1099.89   1099.95   1100.00

 *** WARNING *** MODIFIED PULS ROUTING MAY BE NUMERICALLY UNSTABLE FOR OUTFLOWS BETWEEN      357. TO      559.
                 THE ROUTED HYDROGRAPH SHOULD BE EXAMINED FOR OSCILLATIONS OR OUTFLOWS GREATER THAN PEAK INFLOWS.
                 THIS CAN BE CORRECTED BY DECREASING THE TIME INTERVAL OR INCREASING STORAGE (USE A LONGER REACH.)

      ***             ***             ***             ***             ***

                        HYDROGRAPH AT STATION   RRHV17

  PEAK FLOW     TIME                        MAXIMUM AVERAGE FLOW
                                    6-HR       24-HR       72-HR      24.92-HR
+   (CFS)       (HR)
                 (CFS)
+     123.     12.17                18.          5.          5.          5.
                (INCHES)          1.844       2.199       2.201       2.201
                (AC-FT)             9.          11.         11.         11.

 PEAK STORAGE   TIME                        MAXIMUM AVERAGE STORAGE
                                    6-HR       24-HR       72-HR      24.92-HR
+  (AC-FT)      (HR)
       1.     12.17                 0.          0.          0.          0.

  PEAK STAGE    TIME                        MAXIMUM AVERAGE STAGE
                                    6-HR       24-HR       72-HR      24.92-HR
+   (FEET)      (HR)
   1099.44     12.17              1099.11     1099.04     1099.04     1099.04

                CUMULATIVE AREA =     .09 SQ MI
```

```
*** *** *** *** *** *** *** *** *** *** *** *** *** *** *** *** *** *** *** *** *** *** *** *** *** *** *** *** *** *** *** *** *** *** ***


          **************
          *            *
254 KK    *    RRHV18  *
          *            *
          **************
                        ROUTE FLOW FROM COMPUTATION CPHV8 TO COMPUTATION POINT CPHV10

     HYDROGRAPH ROUTING DATA

256 RS          STORAGE ROUTING
                     NSTPS          3  NUMBER OF SUBREACHES
                      ITYP       ELEV  TYPE OF INITIAL CONDITION
                     RSVRIC    1086.00  INITIAL CONDITION
                          X        .00 WORKING R AND D COEFFICIENT

257 RC          NORMAL DEPTH CHANNEL
                       ANL       .065  LEFT OVERBANK N-VALUE
                      ANCH       .065  MAIN CHANNEL N-VALUE
                       ANR       .065  RIGHT OVERBANK N-VALUE
                     RLNTH      2200.  REACH LENGTH
                       SEL      .0080  ENERGY SLOPE
                     ELMAX    1088.0  MAX. ELEV. FOR STORAGE/OUTFLOW CALCULATION

                                CROSS-SECTION DATA
                          --- LEFT OVERBANK --- + ------ MAIN CHANNEL ------- + --- RIGHT OVERBANK ---
259 RY       ELEVATION  1088.00   1086.00   1086.00   1086.00   1086.00   1086.00   1086.00   1088.00
258 RX       DISTANCE        .00      80.00    200.00    300.00    360.00    440.00    550.00    610.00

                                          ***

                                COMPUTED STORAGE-OUTFLOW-ELEVATION DATA

          STORAGE        .00      2.52      5.07      7.67     10.30     12.98     15.69     18.44     21.23     24.07
          OUTFLOW        .00     22.66     72.14    142.22    230.40    335.23    455.71    591.12    740.91    904.66
        ELEVATION    1086.00   1086.11   1086.21   1086.32   1086.42   1086.53   1086.63   1086.74   1086.84   1086.95

          STORAGE      26.93     29.84     32.79     35.78     38.80     41.87     44.97     48.12     51.30     54.52
          OUTFLOW    1082.02   1272.72   1476.53   1693.26   1922.77   2164.93   2419.63   2686.78   2966.31   3258.17
        ELEVATION    1087.05   1087.16   1087.26   1087.37   1087.47   1087.58   1087.68   1087.79   1087.89   1088.00

      ***             ***             ***             ***             ***

                        HYDROGRAPH AT STATION   RRHV18

  PEAK FLOW     TIME                        MAXIMUM AVERAGE FLOW
                                    6-HR       24-HR       72-HR      24.92-HR
+   (CFS)       (HR)
                 (CFS)
+      71.     12.75                18.          5.          5.          5.
                (INCHES)          1.836       2.186       2.186       2.186
                (AC-FT)             9.          10.         10.         10.

 PEAK STORAGE   TIME                        MAXIMUM AVERAGE STORAGE
                                    6-HR       24-HR       72-HR      24.92-HR
+  (AC-FT)      (HR)
       2.     12.75                 1.          0.          0.          0.

  PEAK STAGE    TIME                        MAXIMUM AVERAGE STAGE
                                    6-HR       24-HR       72-HR      24.92-HR
+   (FEET)      (HR)
   1086.21     12.75              1086.07     1086.02     1086.02     1086.02

                CUMULATIVE AREA =     .09 SQ MI


*** *** *** *** *** *** *** *** *** *** *** *** *** *** *** *** *** *** *** *** *** *** *** *** *** *** *** *** *** *** *** *** *** *** ***


          **************
          *            *
260 KK    *    NWSM1B  *
          *            *
          **************
                        SUB-BASIN NWSM1B -LAND USE - DESERT MOUNTAIN;UNDEVELOPED
                        24-HOUR TYPE II RAINFALL WAS USED TO FIND TC & R FOR THIS BASIN
                        THIS BASIN USED RAINFALL REDUCTION FACTOR OF .97

          SUBBASIN RUNOFF DATA

264 BA          SUBBASIN CHARACTERISTICS
                      TAREA        .13  SUBBASIN AREA

                PRECIPITATION DATA

 16 PB                STORM       4.07  BASIN TOTAL PRECIPITATION

 16 PI              INCREMENTAL PRECIPITATION PATTERN
                       .00       .00       .00       .00       .00       .00       .00       .00       .00       .00
```

.00	.00	.00	.00	.00	.00	.00	.00	.00	.00
.00	.00	.00	.00	.00	.00	.00	.00	.00	.00
.00	.00	.00	.00	.00	.00	.00	.00	.00	.00
.00	.00	.00	.00	.00	.00	.00	.00	.00	.00
.00	.00	.00	.00	.00	.00	.00	.00	.00	.00
.00	.00	.00	.00	.00	.00	.00	.00	.00	.00
.00	.00	.00	.00	.00	.00	.00	.00	.00	.00
.00	.00	.00	.00	.00	.00	.00	.00	.00	.00
.00	.00	.00	.00	.00	.00	.00	.00	.00	.00
.00	.00	.00	.00	.00	.00	.00	.00	.00	.00
.00	.00	.00	.00	.00	.00	.00	.00	.00	.00
.00	.00	.00	.00	.00	.00	.01	.01	.01	.01
.01	.01	.01	.01	.01	.01	.01	.01	.06	.06
.06	.06	.06	.06	.01	.01	.01	.01	.01	.01
.01	.01	.01	.01	.01	.01	.00	.00	.00	.00
.00	.00	.00	.00	.00	.00	.00	.00	.00	.00
.00	.00	.00	.00	.00	.00	.00	.00	.00	.00
.00	.00	.00	.00	.00	.00	.00	.00	.00	.00
.00	.00	.00	.00	.00	.00	.00	.00	.00	.00
.00	.00	.00	.00	.00	.00	.00	.00	.00	.00
.00	.00	.00	.00	.00	.00	.00	.00	.00	.00
.00	.00	.00	.00	.00	.00	.00	.00	.00	.00
.00	.00	.00	.00	.00	.00	.00	.00	.00	.00
.00	.00	.00	.00	.00	.00	.00	.00	.00	.00
.00	.00	.00	.00	.00	.00	.00	.00	.00	.00
.00	.00	.00	.00	.00	.00	.00	.00	.00	.00
.00	.00	.00	.00	.00	.00	.00	.00	.00	.00
.00	.00	.00	.00	.00	.00	.00	.00		

265 LG GREEN AND AMPT LOSS RATE

STRTL	.15	STARTING LOSS
DTH	.34	MOISTURE DEFICIT
PSIF	2.50	WETTING FRONT SUCTION
XKSAT	1.14	HYDRAULIC CONDUCTIVITY
RTIMP	60.00	PERCENT IMPERVIOUS AREA

266 UC CLARK UNITGRAPH

TC	.27	TIME OF CONCENTRATION
R	.23	STORAGE COEFFICIENT

267 UA ACCUMULATED-AREA VS. TIME, 11 ORDINATES

.0	3.0	5.0	8.0	12.0	20.0	43.0	75.0	90.0	96.0
100.0									

***

UNIT HYDROGRAPH PARAMETERS

CLARK TC= .27 HR, R= .23 HR
SNYDER TP= .25 HR, CP= .67

UNIT HYDROGRAPH
17 END-OF-PERIOD ORDINATES

13.	89.	201.	215.	152.	105.	72.	50.	34.	24.
16.	11.	8.	5.	4.	3.	2.			

*** *** *** *** ***

HYDROGRAPH AT STATION NWSM1B

TOTAL RAINFALL = 4.07, TOTAL LOSS = 1.38, TOTAL EXCESS = 2.70

PEAK FLOW	TIME		MAXIMUM AVERAGE FLOW			
			6-HR	24-HR	72-HR	24.92-HR
+ (CFS)	(HR)					
		(CFS)				
+ 168.	12.08		28.	9.	9.	9.
		(INCHES)	1.972	2.683	2.687	2.687
		(AC-FT)	14.	19.	19.	19.

CUMULATIVE AREA = .13 SQ MI

*** ***

269 KK * RR43B1 *

ROUTE FLOW FROM SUB-BASIN NWSM1B TO COMPUTATION POINT CPHV9 (1ST REACH)

HYDROGRAPH ROUTING DATA

271 RS STORAGE ROUTING

NSTPS	1	NUMBER OF SUBREACHES
ITYP	ELEV	TYPE OF INITIAL CONDITION
RSVRIC	1168.00	INITIAL CONDITION
X	.00	WORKING R AND D COEFFICIENT

272 RC NORMAL DEPTH CHANNEL

ANL	.035	LEFT OVERBANK N-VALUE
ANCH	.040	MAIN CHANNEL N-VALUE
ANR	.035	RIGHT OVERBANK N-VALUE
RLNTH	1850.	REACH LENGTH
SEL	.4700	ENERGY SLOPE
ELMAX	1172.0	MAX. ELEV. FOR STORAGE/OUTFLOW CALCULATION

CROSS-SECTION DATA

		--- LEFT OVERBANK --- +		------ MAIN CHANNEL -------			+ --- RIGHT OVERBANK ---		
274 RY	ELEVATION	1172.00	1171.50	1170.00	1168.00	1168.00	1170.00	1171.50	1172.00
273 RX	DISTANCE	.00	40.00	100.00	120.00	135.00	150.00	190.00	240.00

***

COMPUTED STORAGE-OUTFLOW-ELEVATION DATA

STORAGE	.00	.15	.33	.55	.80	1.08	1.40	1.75	2.13	2.54
OUTFLOW	.00	29.89	99.99	207.58	354.16	542.11	774.06	1052.76	1380.95	1761.35
ELEVATION	1168.00	1168.21	1168.42	1168.63	1168.84	1169.05	1169.26	1169.47	1169.68	1169.90
STORAGE	3.00	3.57	4.27	5.10	6.05	7.12	8.32	9.66	11.30	13.28
OUTFLOW	2246.94	2862.01	3586.10	4440.05	5441.88	6608.00	7953.71	9398.53	11004.48	12977.42
ELEVATION	1170.11	1170.32	1170.53	1170.74	1170.95	1171.16	1171.37	1171.58	1171.79	1172.00

*** WARNING *** MODIFIED PULS ROUTING MAY BE NUMERICALLY UNSTABLE FOR OUTFLOWS BETWEEN 30. TO 12977.
THE ROUTED HYDROGRAPH SHOULD BE EXAMINED FOR OSCILLATIONS OR OUTFLOWS GREATER THAN PEAK INFLOWS.
THIS CAN BE CORRECTED BY DECREASING THE TIME INTERVAL OR INCREASING STORAGE (USE A LONGER REACH.)

*** *** *** *** ***

HYDROGRAPH AT STATION RR43B1

PEAK FLOW	TIME		MAXIMUM AVERAGE FLOW			
			6-HR	24-HR	72-HR	24.92-HR
+ (CFS)	(HR)					
		(CFS)				
+ 166.	12.17		28.	9.	9.	9.
		(INCHES)	1.972	2.683	2.687	2.687
		(AC-FT)	14.	19.	19.	19.

PEAK STORAGE	TIME	MAXIMUM AVERAGE STORAGE			
		6-HR	24-HR	72-HR	24.92-HR
+ (AC-FT)	(HR)				
0.	12.08	0.	0.	0.	0.

PEAK STAGE	TIME	MAXIMUM AVERAGE STAGE			
		6-HR	24-HR	72-HR	24.92-HR
+ (FEET)	(HR)				
1168.55	12.17	1168.14	1168.05	1168.05	1168.05

CUMULATIVE AREA = .13 SQ MI

*** ***

275 KK * RR43B2 *

ROUTE FLOW FROM SUB-BASIN NWSM1B TO COMPUTATION POINT CPHV9 (2ND REACH)

HYDROGRAPH ROUTING DATA

277 RS STORAGE ROUTING

NSTPS	2	NUMBER OF SUBREACHES
ITYP	ELEV	TYPE OF INITIAL CONDITION
RSVRIC	1118.00	INITIAL CONDITION
X	.00	WORKING R AND D COEFFICIENT

278 RC NORMAL DEPTH CHANNEL

ANL	.035	LEFT OVERBANK N-VALUE
ANCH	.040	MAIN CHANNEL N-VALUE
ANR	.035	RIGHT OVERBANK N-VALUE
RLNTH	1000.	REACH LENGTH
SEL	.0340	ENERGY SLOPE
ELMAX	1120.0	MAX. ELEV. FOR STORAGE/OUTFLOW CALCULATION

CROSS-SECTION DATA

		--- LEFT OVERBANK --- +		------ MAIN CHANNEL -------			+ --- RIGHT OVERBANK ---		
280 RY	ELEVATION	1120.00	1119.00	1119.00	1118.00	1118.00	1118.00	1119.00	1120.00
279 RX	DISTANCE	.00	50.00	110.00	410.00	580.00	850.00	970.00	1160.00

***

COMPUTED STORAGE-OUTFLOW-ELEVATION DATA

STORAGE	.00	1.12	2.34	3.67	5.11	6.65	8.30	10.06	11.92	13.89
OUTFLOW	.00	72.51	235.62	474.24	784.53	1165.56	1617.70	2141.98	2739.87	3413.08
ELEVATION	1118.00	1118.11	1118.21	1118.32	1118.42	1118.53	1118.63	1118.74	1118.84	1118.95
STORAGE	16.03	18.32	20.66	23.07	25.53	28.06	30.65	33.30	36.01	38.78
OUTFLOW	4210.94	5151.48	6187.65	7317.54	8540.33	9855.74	11263.79	12764.70	14358.86	16046.73

ELEVATION 1119.05 1119.16 1119.26 1119.37 1119.47 1119.58 1119.68 1119.79 1119.89 1120.00

*** WARNING *** MODIFIED PULS ROUTING MAY BE NUMERICALLY UNSTABLE FOR OUTFLOWS BETWEEN 236. TO 16047.
THE ROUTED HYDROGRAPH SHOULD BE EXAMINED FOR OSCILLATIONS OR OUTFLOWS GREATER THAN PEAK INFLOWS.
THIS CAN BE CORRECTED BY DECREASING THE TIME INTERVAL OR INCREASING STORAGE (USE A LONGER REACH.)

*** *** *** *** ***

HYDROGRAPH AT STATION RR43B2

PEAK FLOW	TIME		MAXIMUM AVERAGE FLOW			
			6-HR	24-HR	72-HR	24.92-HR
+ (CFS)	(HR)					
		(CFS)				
+ 161.	12.17		28.	9.	9.	9.
		(INCHES)	1.971	2.682	2.686	2.686
		(AC-FT)	14.	19.	19.	19.

PEAK STORAGE	TIME	MAXIMUM AVERAGE STORAGE			
		6-HR	24-HR	72-HR	24.92-HR
+ (AC-FT)	(HR)				
1.	12.17	0.	0.	0.	0.

PEAK STAGE	TIME	MAXIMUM AVERAGE STAGE			
		6-HR	24-HR	72-HR	24.92-HR
+ (FEET)	(HR)				
1118.16	12.17	1118.04	1118.01	1118.01	1118.01

CUMULATIVE AREA = .13 SQ MI

*** ***

281 KK **************
* A43A1B *
****

SUB-BASIN A43A1B -LAND USE - DESERT MOUNTAINS,DESERT HILLS;MINOR DEVELOPMENT
24-HOUR TYPE II RAINFALL WAS USED TO FIND TC & R FOR THIS BASIN
THIS BASIN USED RAINFALL REDUCTION FACTOR OF .97

SUBBASIN RUNOFF DATA

285 BA SUBBASIN CHARACTERISTICS
TAREA .17 SUBBASIN AREA

PRECIPITATION DATA

16 PB STORM 4.07 BASIN TOTAL PRECIPITATION

16 PI INCREMENTAL PRECIPITATION PATTERN

.00	.00	.00	.00	.00	.00	.00	.00	.00	.00
.00	.00	.00	.00	.00	.00	.00	.00	.00	.00
.00	.00	.00	.00	.00	.00	.00	.00	.00	.00
.00	.00	.00	.00	.00	.00	.00	.00	.00	.00
.00	.00	.00	.00	.00	.00	.00	.00	.00	.00
.00	.00	.00	.00	.00	.00	.00	.00	.00	.00
.00	.00	.00	.00	.00	.00	.00	.00	.00	.00
.00	.00	.00	.00	.00	.00	.00	.00	.00	.00
.00	.00	.00	.00	.00	.00	.00	.00	.00	.00
.00	.00	.00	.00	.00	.00	.00	.00	.00	.00
.00	.00	.00	.00	.00	.00	.00	.00	.00	.00
.00	.00	.00	.00	.00	.00	.00	.00	.00	.00
.00	.00	.00	.00	.00	.00	.01	.01	.01	.01
.01	.01	.01	.01	.01	.01	.01	.01	.06	.06
.06	.06	.06	.06	.01	.01	.01	.01	.01	.01
.01	.01	.01	.01	.01	.01	.00	.00	.00	.00
.00	.00	.00	.00	.00	.00	.00	.00	.00	.00
.00	.00	.00	.00	.00	.00	.00	.00	.00	.00
.00	.00	.00	.00	.00	.00	.00	.00	.00	.00
.00	.00	.00	.00	.00	.00	.00	.00	.00	.00
.00	.00	.00	.00	.00	.00	.00	.00	.00	.00
.00	.00	.00	.00	.00	.00	.00	.00	.00	.00
.00	.00	.00	.00	.00	.00	.00	.00	.00	.00
.00	.00	.00	.00	.00	.00	.00	.00	.00	.00
.00	.00	.00	.00	.00	.00	.00	.00	.00	.00
.00	.00	.00	.00	.00	.00	.00	.00	.00	.00
.00	.00	.00	.00	.00	.00	.00	.00	.00	.00
.00	.00	.00	.00	.00	.00	.00	.00	.00	.00
.00	.00	.00	.00	.00	.00	.00	.00		

286 LG GREEN AND AMPT LOSS RATE
STRTL .15 STARTING LOSS
DTH .28 MOISTURE DEFICIT
PSIF 4.10 WETTING FRONT SUCTION
XKSAT .46 HYDRAULIC CONDUCTIVITY
RTIMP 15.00 PERCENT IMPERVIOUS AREA

287 UC CLARK UNITGRAPH
TC .28 TIME OF CONCENTRATION
R .15 STORAGE COEFFICIENT

288 UA ACCUMULATED-AREA VS. TIME, 11 ORDINATES

.0	3.0	5.0	8.0	12.0	20.0	43.0	75.0	90.0	96.0
100.0									

***

UNIT HYDROGRAPH PARAMETERS
CLARK TC= .28 HR, R= .15 HR
SNYDER TP= .25 HR, CP= .83

UNIT HYDROGRAPH
12 END-OF-PERIOD ORDINATES

22.	128.	321.	352.	214.	121.	69.	39.	22.	13.
7.	4.								

*** *** *** *** ***

HYDROGRAPH AT STATION A43A1B

TOTAL RAINFALL = 4.07, TOTAL LOSS = 2.53, TOTAL EXCESS = 1.54

PEAK FLOW	TIME		MAXIMUM AVERAGE FLOW			
			6-HR	24-HR	72-HR	24.92-HR
+ (CFS)	(HR)					
		(CFS)				
+ 235.	12.08		25.	7.	7.	7.
		(INCHES)	1.357	1.535	1.536	1.536
		(AC-FT)	12.	14.	14.	14.

CUMULATIVE AREA = .17 SQ MI

*** ***

290 KK **************
* CPHV9 *
****

COMBINE ROUTED FLOW FROM SUB-BASIN NWSM1B WITH RUNOFF FROM SUB-BASIN A43A1B

292 HC HYDROGRAPH COMBINATION
ICOMP 2 NUMBER OF HYDROGRAPHS TO COMBINE

***

*** *** *** *** ***

HYDROGRAPH AT STATION CPHV9

PEAK FLOW	TIME		MAXIMUM AVERAGE FLOW			
			6-HR	24-HR	72-HR	24.92-HR
+ (CFS)	(HR)					
		(CFS)				
+ 382.	12.08		52.	16.	16.	16.
		(INCHES)	1.623	2.032	2.034	2.034
		(AC-FT)	26.	33.	33.	33.

CUMULATIVE AREA = .30 SQ MI

*** ***

293 KK **************
* RRHV19 *
****

ROUTE FLOW FROM COMPUTATION CPHV9 TO COMPUTATION POINT CPHV10

HYDROGRAPH ROUTING DATA

295 RS STORAGE ROUTING
NSTPS 5 NUMBER OF SUBREACHES
ITYP ELEV TYPE OF INITIAL CONDITION
RSVRIC 1091.00 INITIAL CONDITION
X .00 WORKING R AND D COEFFICIENT

296 RC NORMAL DEPTH CHANNEL
ANL .065 LEFT OVERBANK N-VALUE
ANCH .065 MAIN CHANNEL N-VALUE
ANR .065 RIGHT OVERBANK N-VALUE
RLNTH 1700. REACH LENGTH
SEL .0140 ENERGY SLOPE
ELMAX 1092.0 MAX. ELEV. FOR STORAGE/OUTFLOW CALCULATION

CROSS-SECTION DATA

```
                    --- LEFT OVERBANK --- + ------ MAIN CHANNEL ------- + --- RIGHT OVERBANK ---
298 RY      ELEVATION  1092.00   1091.00   1091.00   1091.00   1091.00   1091.00   1091.00   1092.00
297 RX      DISTANCE        .00     60.00    450.00    530.00    610.00    690.00    830.00    960.00

                                          ***

                              COMPUTED STORAGE-OUTFLOW-ELEVATION DATA

          STORAGE        .00      1.59      3.20      4.84      6.49      8.16      9.86     11.57     13.31     15.06
          OUTFLOW        .00     15.46     49.20     96.95    156.99    228.30    310.19    402.14    503.77    614.75
        ELEVATION    1091.00   1091.05   1091.11   1091.16   1091.21   1091.26   1091.32   1091.37   1091.42   1091.47

          STORAGE      16.84     18.63     20.45     22.29     24.15     26.02     27.92     29.84     31.78     33.74
          OUTFLOW     734.85    863.85   1001.59   1147.90   1302.68   1465.81   1637.21   1816.79   2004.49   2200.25
        ELEVATION    1091.53   1091.58   1091.63   1091.68   1091.74   1091.79   1091.84   1091.89   1091.95   1092.00


 *** WARNING *** MODIFIED PULS ROUTING MAY BE NUMERICALLY UNSTABLE FOR OUTFLOWS BETWEEN      402. TO     2200.
                 THE ROUTED HYDROGRAPH SHOULD BE EXAMINED FOR OSCILLATIONS OR OUTFLOWS GREATER THAN PEAK INFLOWS.
                 THIS CAN BE CORRECTED BY DECREASING THE TIME INTERVAL OR INCREASING STORAGE (USE A LONGER REACH.)

      ***           ***           ***           ***           ***

                              HYDROGRAPH AT STATION   RRHV19

  PEAK FLOW     TIME                                MAXIMUM AVERAGE FLOW
                                          6-HR        24-HR       72-HR      24.92-HR
+   (CFS)       (HR)
                          (CFS)
+     348.     12.33                      52.         16.         16.         16.
                        (INCHES)        1.620       2.021       2.021       2.021
                        (AC-FT)           26.         32.         32.         32.

  PEAK STORAGE  TIME                            MAXIMUM AVERAGE STORAGE
                                          6-HR        24-HR       72-HR      24.92-HR
+   (AC-FT)     (HR)
        2.     12.33                       1.          0.          0.          0.

  PEAK STAGE    TIME                            MAXIMUM AVERAGE STAGE
                                          6-HR        24-HR       72-HR      24.92-HR
+   (FEET)      (HR)
    1091.34    12.33                  1091.09     1091.03     1091.03     1091.03

                              CUMULATIVE AREA =      .30 SQ MI


*** *** *** *** *** *** *** *** *** *** *** *** *** *** *** *** *** *** *** *** *** *** *** *** *** *** *** *** *** *** *** ***


          **************
          *            *
299 KK    *    CPHV10  *
          *            *
          **************
                        COMBINE ROUTED FLOWS FROM COMPUTATION POINTS CPHV8 AND CPHV9

301 HC          HYDROGRAPH COMBINATION
                     ICOMP           2  NUMBER OF HYDROGRAPHS TO COMBINE

                                                ***

      ***           ***           ***           ***           ***

                              HYDROGRAPH AT STATION   CPHV10

  PEAK FLOW     TIME                                MAXIMUM AVERAGE FLOW
                                          6-HR        24-HR       72-HR      24.92-HR
+   (CFS)       (HR)
                          (CFS)
+     373.     12.42                      70.         22.         21.         21.
                        (INCHES)        1.669       2.059       2.059       2.059
                        (AC-FT)           35.         43.         43.         43.

                              CUMULATIVE AREA =      .39 SQ MI


*** *** *** *** *** *** *** *** *** *** *** *** *** *** *** *** *** *** *** *** *** *** *** *** *** *** *** *** *** *** *** ***


          **************
          *            *
302 KK    *    RRHV20  *
          *            *
          **************
                        ROUTE FLOW FROM COMPUTATION CPHV10 TO COMPUTATION POINT CPHV11

          HYDROGRAPH ROUTING DATA

304 RS          STORAGE ROUTING
                     NSTPS           2  NUMBER OF SUBREACHES
                      ITYP        ELEV  TYPE OF INITIAL CONDITION
                    RSVRIC     1074.50  INITIAL CONDITION
                         X         .00  WORKING R AND D COEFFICIENT

305 RC          NORMAL DEPTH CHANNEL
                       ANL        .065  LEFT OVERBANK N-VALUE
                      ANCH        .065  MAIN CHANNEL N-VALUE
                       ANR        .065  RIGHT OVERBANK N-VALUE
                     RLNTH       1100.  REACH LENGTH
                       SEL       .0085  ENERGY SLOPE
                     ELMAX      1078.0  MAX. ELEV. FOR STORAGE/OUTFLOW CALCULATION

                                  CROSS-SECTION DATA
                    --- LEFT OVERBANK --- + ------ MAIN CHANNEL ------- + --- RIGHT OVERBANK ---
307 RY      ELEVATION  1078.00   1076.00   1074.50   1074.50   1074.50   1074.50   1076.00   1078.00
306 RX      DISTANCE        .00     90.00    480.00    510.00    520.00    530.00    870.00   1300.00

                                          ***

                              COMPUTED STORAGE-OUTFLOW-ELEVATION DATA

          STORAGE        .00       .44      1.30      2.57      4.27      6.38      8.90     11.84     15.20     18.91
          OUTFLOW        .00      9.86     42.60    105.95    206.99    352.27    547.87    799.52   1112.68   1522.72
        ELEVATION    1074.50   1074.68   1074.87   1075.05   1075.24   1075.42   1075.61   1075.79   1075.97   1076.16

          STORAGE      22.84     26.99     31.37     35.97     40.79     45.84     51.10     56.59     62.31     68.24
          OUTFLOW    2004.26   2552.86   3169.55   3855.56   4612.25   5441.06   6343.46   7321.02   8375.28   9507.84
        ELEVATION    1076.34   1076.53   1076.71   1076.89   1077.08   1077.26   1077.45   1077.63   1077.82   1078.00


 *** WARNING *** MODIFIED PULS ROUTING MAY BE NUMERICALLY UNSTABLE FOR OUTFLOWS BETWEEN     3170. TO     9508.
                 THE ROUTED HYDROGRAPH SHOULD BE EXAMINED FOR OSCILLATIONS OR OUTFLOWS GREATER THAN PEAK INFLOWS.
                 THIS CAN BE CORRECTED BY DECREASING THE TIME INTERVAL OR INCREASING STORAGE (USE A LONGER REACH.)

      ***           ***           ***           ***           ***

                              HYDROGRAPH AT STATION   RRHV20

  PEAK FLOW     TIME                                MAXIMUM AVERAGE FLOW
                                          6-HR        24-HR       72-HR      24.92-HR
+   (CFS)       (HR)
                          (CFS)
+     337.     12.58                      70.         22.         21.         21.
                        (INCHES)        1.669       2.051       2.051       2.051
                        (AC-FT)           35.         43.         43.         43.

  PEAK STORAGE  TIME                            MAXIMUM AVERAGE STORAGE
                                          6-HR        24-HR       72-HR      24.92-HR
+   (AC-FT)     (HR)
        3.     12.58                       1.          0.          0.          0.

  PEAK STAGE    TIME                            MAXIMUM AVERAGE STAGE
                                          6-HR        24-HR       72-HR      24.92-HR
+   (FEET)      (HR)
    1075.40    12.58                  1074.88     1074.67     1074.66     1074.66

                              CUMULATIVE AREA =      .39 SQ MI


*** *** *** *** *** *** *** *** *** *** *** *** *** *** *** *** *** *** *** *** *** *** *** *** *** *** *** *** *** *** *** ***


          **************
          *            *
308 KK    *    ED47B   *
          *            *
          **************
                        SUB-BASIN ED47B -LAND USE - AGRICULTURE,DESERT MOUNTAIN,DESERT HILLS;MODERATE
                        DEVELOPMENT
                        24-HOUR TYPE II RAINFALL WAS USED TO FIND TC & R FOR THIS BASIN
                        THIS BASIN USED RAINFALL REDUCTION FACTOR OF .97

          SUBBASIN RUNOFF DATA

313 BA          SUBBASIN CHARACTERISTICS
                     TAREA         .81  SUBBASIN AREA

                PRECIPITATION DATA

 16 PB                STORM        4.07  BASIN TOTAL PRECIPITATION

 16 PI          INCREMENTAL PRECIPITATION PATTERN
                     .00       .00       .00       .00       .00       .00       .00       .00       .00       .00
                     .00       .00       .00       .00       .00       .00       .00       .00       .00       .00
                     .00       .00       .00       .00       .00       .00       .00       .00       .00       .00
                     .00       .00       .00       .00       .00       .00       .00       .00       .00       .00
                     .00       .00       .00       .00       .00       .00       .00       .00       .00       .00
                     .00       .00       .00       .00       .00       .00       .00       .00       .00       .00
                     .00       .00       .00       .00       .00       .00       .00       .00       .00       .00
                     .00       .00       .00       .00       .00       .00       .00       .00       .00       .00
                     .00       .00       .00       .00       .00       .00       .00       .00       .00       .00
                     .00       .00       .00       .00       .00       .00       .00       .00       .00       .00
                     .00       .00       .00       .00       .00       .00       .00       .00       .00       .00
```

.00	.00	.00	.00	.00	.00	.01	.01	.01	.01
.01	.01	.01	.01	.01	.01	.01	.01	.06	.06
.06	.06	.06	.06	.01	.01	.01	.01	.01	.01
.01	.01	.01	.01	.01	.01	.00	.00	.00	.00
.00	.00	.00	.00	.00	.00	.00	.00	.00	.00
.00	.00	.00	.00	.00	.00	.00	.00	.00	.00
.00	.00	.00	.00	.00	.00	.00	.00	.00	.00
.00	.00	.00	.00	.00	.00	.00	.00	.00	.00
.00	.00	.00	.00	.00	.00	.00	.00	.00	.00
.00	.00	.00	.00	.00	.00	.00	.00	.00	.00
.00	.00	.00	.00	.00	.00	.00	.00	.00	.00
.00	.00	.00	.00	.00	.00	.00	.00	.00	.00
.00	.00	.00	.00	.00	.00	.00	.00	.00	.00
.00	.00	.00	.00	.00	.00	.00	.00	.00	.00
.00	.00	.00	.00	.00	.00	.00	.00	.00	.00
.00	.00	.00	.00	.00	.00	.00	.00	.00	.00
.00	.00	.00	.00	.00	.00	.00	.00		

314 LG GREEN AND AMPT LOSS RATE

STRTL	.33	STARTING LOSS
DTH	.09	MOISTURE DEFICIT
PSIF	4.10	WETTING FRONT SUCTION
XKSAT	.63	HYDRAULIC CONDUCTIVITY
RTIMP	10.00	PERCENT IMPERVIOUS AREA

315 UC CLARK UNITGRAPH

TC	.28	TIME OF CONCENTRATION
R	.11	STORAGE COEFFICIENT

316 UA ACCUMULATED-AREA VS. TIME, 11 ORDINATES

.0 3.0 5.0 8.0 12.0 20.0 43.0 75.0 90.0 96.0
100.0

***

UNIT HYDROGRAPH PARAMETERS
CLARK TC= .28 HR, R= .11 HR
SNYDER TP= .24 HR, CP= .89

UNIT HYDROGRAPH
10 END-OF-PERIOD ORDINATES

132. 740. 1808. 1840. 939. 436. 203. 94. 44. 20.

*** *** *** *** ***

HYDROGRAPH AT STATION ED47B

TOTAL RAINFALL = 4.07, TOTAL LOSS = 2.66, TOTAL EXCESS = 1.41

PEAK FLOW	TIME		MAXIMUM AVERAGE FLOW			
			6-HR	24-HR	72-HR	24.92-HR
+ (CFS)	(HR)					
		(CFS)				
+ 1159.	12.08		112.	31.	30.	30.
		(INCHES)	1.288	1.407	1.408	1.408
		(AC-FT)	56.	61.	61.	61.

CUMULATIVE AREA = .81 SQ MI

*** ***

318 KK * CPHV11 *

COMBINE ROUTED FLOWS FROM COMPUTATION POINT CPHV10 TO RUNOFF FROM SUB-BASIN ED47B

321 HC HYDROGRAPH COMBINATION
ICOMP 3 NUMBER OF HYDROGRAPHS TO COMBINE

***

*** *** *** *** ***

HYDROGRAPH AT STATION CPHV11

PEAK FLOW	TIME		MAXIMUM AVERAGE FLOW			
			6-HR	24-HR	72-HR	24.92-HR
+ (CFS)	(HR)					
		(CFS)				
+ 1197.	12.08		199.	64.	62.	62.
		(INCHES)	.804	1.039	1.040	1.040
		(AC-FT)	99.	128.	128.	128.

CUMULATIVE AREA = 2.30 SQ MI

*** ***

322 KK * DFED47 *

RATE CHANNEL CROSSECTION AT COMPUTATION POINT ED47B FOR SPLIT FLOW
DIVERTED FLOW IS ROUTED THROUGH SUB BASIN IR55B

DT DIVERSION
ISTAD DIR55B DIVERSION HYDROGRAPH IDENTIFICATION

DI	INFLOW	.00	139.00	558.00	1324.00	2507.00
DQ	DIVERTED FLOW	.00	20.00	126 00	372.00	801.00

***

*** *** *** *** ***

DIVERSION HYDROGRAPH DIR55B

PEAK FLOW	TIME		MAXIMUM AVERAGE FLOW			
			6-HR	24-HR	72-HR	24.92-HR
+ (CFS)	(HR)					
		(CFS)				
+ 331.	12.08		44.	13.	13.	13.
		(INCHES)	.178	.212	.212	.212
		(AC-FT)	22.	26.	26.	26.

CUMULATIVE AREA = 2.30 SQ MI

*** *** *** *** ***

HYDROGRAPH AT STATION DFED47

PEAK FLOW	TIME		MAXIMUM AVERAGE FLOW			
			6-HR	24-HR	72-HR	24.92-HR
+ (CFS)	(HR)					
		(CFS)				
+ 866.	12.08		155.	51.	49.	49.
		(INCHES)	.626	.827	.828	.828
		(AC-FT)	77.	102.	102.	102.

CUMULATIVE AREA = 2.30 SQ MI

*** ***

328 KK * RRHV21 *

ROUTE FLOW FROM COMPUTATION POINT CPHV11 TO COMPUTATION POINT CPHV12
(1ST REACH)

HYDROGRAPH ROUTING DATA

331 RS STORAGE ROUTING

NSTPS	5	NUMBER OF SUBREACHES
ITYP	ELEV	TYPE OF INITIAL CONDITION
RSVRIC	1059.50	INITIAL CONDITION
X	.00	WORKING R AND D COEFFICIENT

332 RC NORMAL DEPTH CHANNEL

ANL	.015	LEFT OVERBANK N-VALUE
ANCH	.065	MAIN CHANNEL N-VALUE
ANR	.065	RIGHT OVERBANK N-VALUE
RLNTH	2660.	REACH LENGTH
SEL	.0060	ENERGY SLOPE
ELMAX	1060.7	MAX. ELEV. FOR STORAGE/OUTFLOW CALCULATION

CROSS-SECTION DATA

		--- LEFT OVERBANK --- +		------ MAIN CHANNEL -------			+ --- RIGHT OVERBANK ---		
334 RY	ELEVATION	1060.70	1060.00	1060.00	1060.00	1059.50	1059.50	1060.00	1060.70
333 RX	DISTANCE	.00	30.00	60.00	150.00	180.00	600.00	660.00	690.00

***

COMPUTED STORAGE-OUTFLOW-ELEVATION DATA

STORAGE	.00	1.64	3.32	5.05	6.82	8.64	10.50	12.40	14.39	16.83
OUTFLOW	.00	7.51	24.03	47.56	77.37	113.02	154.23	200.81	225.82	291.25
ELEVATION	1059.50	1059.56	1059.63	1059.69	1059.75	1059.82	1059.88	1059.94	1060.00	1060.07
STORAGE	19.29	21.77	24.27	26.79	29.34	31.90	34.49	37.10	39.72	42.37
OUTFLOW	365.62	448.25	538.82	637.10	742.97	856.31	977.05	1105.14	1240.53	1383.19
ELEVATION	1060.13	1060.19	1060.26	1060.32	1060.38	1060.45	1060.51	1060.57	1060.64	1060.70

```
     ***               ***               ***               ***               ***

                             HYDROGRAPH AT STATION   RRHV21

  PEAK FLOW       TIME                                    MAXIMUM AVERAGE FLOW
                                             6-HR         24-HR          72-HR        24.92-HR
+   (CFS)         (HR)
                                  (CFS)
+      752.       12.33                        155.           50.            48.            48.
                               (INCHES)        .624          .803           .803           .803
                                (AC-FT)         77.           99.            99.            99.

 PEAK STORAGE     TIME                                 MAXIMUM AVERAGE STORAGE
                                             6-HR         24-HR          72-HR        24.92-HR
+  (AC-FT)        (HR)
          6.      12.33                          2.            1.             1.             1.

  PEAK STAGE      TIME                                 MAXIMUM AVERAGE STAGE
                                             6-HR         24-HR          72-HR        24.92-HR
+  (FEET)         (HR)
     1060.39      12.33                     1059.83       1059.65        1059.64        1059.64

                           CUMULATIVE AREA =    2.30 SQ MI


*** *** *** *** *** *** *** *** *** *** *** *** *** *** *** *** *** *** *** *** *** *** *** *** *** *** *** *** *** *** *** ***


                 **************
                 *            *
 335 KK          *   RRHV22   *
                 *            *
                 **************
                              ROUTE FLOW FROM COMPUTATION POINT CPHV11 TO COMPUTATION POINT CPHV12
                               (2ND REACH)

                   HYDROGRAPH ROUTING DATA

 338 RS              STORAGE ROUTING
                          NSTPS            7   NUMBER OF SUBREACHES
                           ITYP         ELEV   TYPE OF INITIAL CONDITION
                         RSVRIC      1039.50   INITIAL CONDITION
                              X          .00 WORKING R AND D COEFFICIENT

 339 RC              NORMAL DEPTH CHANNEL
                            ANL         .070   LEFT OVERBANK N-VALUE
                           ANCH         .070   MAIN CHANNEL N-VALUE
                            ANR         .070   RIGHT OVERBANK N-VALUE
                          RLNTH        2724.   REACH LENGTH
                            SEL        .0070   ENERGY SLOPE
                          ELMAX       1040.1   MAX. ELEV. FOR STORAGE/OUTFLOW CALCULATION

                                           CROSS-SECTION DATA
                              --- LEFT OVERBANK --- + ------ MAIN CHANNEL ------- + --- RIGHT OVERBANK ---
 341 RY            ELEVATION   1040.10    1039.00    1039.50    1039.50    1039.50    1039.50    1040.00    1040.10
 340 RX            DISTANCE        .00     230.00     700.00     701.00    1260.00    1261.00    1480.00    1520.00

                                                                  ***

                                        COMPUTED STORAGE-OUTFLOW-ELEVATION DATA

                STORAGE        .00        .12        .48       1.08       1.92       3.01       4.33       5.89       7.70      10.46
                OUTFLOW        .00        .32       2.05       6.04      13.02      23.60      38.37      57.89      82.65     116.99
              ELEVATION    1039.00    1039.06    1039.12    1039.17    1039.23    1039.29    1039.35    1039.41    1039.46    1039.52

                STORAGE      14.69      19.05      23.55      28.18      32.94      37.85      42.89      48.06      53.37      58.80
                OUTFLOW     172.72     243.47     327.76     424.86     534.37     656.03     789.68     935.20    1092.72    1262.04
              ELEVATION    1039.58    1039.64    1039.69    1039.75    1039.81    1039.87    1039.93    1039.98    1040.04    1040.10


     ***               ***               ***               ***               ***

                             HYDROGRAPH AT STATION   RRHV22

  PEAK FLOW       TIME                                    MAXIMUM AVERAGE FLOW
                                             6-HR         24-HR          72-HR        24.92-HR
+   (CFS)         (HR)
                                  (CFS)
+      549.       13.00                        153.           56.            54.            54.
                               (INCHES)        .619          .897           .912           .912
                                (AC-FT)         76.          110.           112.           112.

 PEAK STORAGE     TIME                                 MAXIMUM AVERAGE STORAGE
                                             6-HR         24-HR          72-HR        24.92-HR
+  (AC-FT)        (HR)
          5.      13.00                          2.            1.             1.             1.

  PEAK STAGE      TIME                                 MAXIMUM AVERAGE STAGE
                                             6-HR         24-HR          72-HR        24.92-HR
+  (FEET)         (HR)
     1039.82      13.00                     1039.50       1039.30        1039.30        1039.30
```

```
                           CUMULATIVE AREA =    2.30 SQ MI

*** *** *** *** *** *** *** *** *** *** *** *** *** *** *** *** *** *** *** *** *** *** *** *** *** *** *** *** *** *** *** *** ***

                 **************
                 *            *
 342 KK          *   IR59B    *
                 *            *
                 **************
                              SUB-BASIN IR59B -LAND USE - AGRICULTURE; MINOR DEVELOPMENT
                              24-HOUR TYPE II RAINFALL WAS USED TO FIND TC & R FOR THIS BASIN
                              THIS BASIN USED RAINFALL REDUCTION FACTOR OF .97

                   SUBBASIN RUNOFF DATA

 346 BA              SUBBASIN CHARACTERISTICS
                           TAREA          .66   SUBBASIN AREA

                     PRECIPITATION DATA

  16 PB                    STORM         4.07   BASIN TOTAL PRECIPITATION

  16 PI                INCREMENTAL PRECIPITATION PATTERN
                         .00       .00       .00       .00       .00       .00       .00       .00       .00       .00
                         .00       .00       .00       .00       .00       .00       .00       .00       .00       .00
                         .00       .00       .00       .00       .00       .00       .00       .00       .00       .00
                         .00       .00       .00       .00       .00       .00       .00       .00       .00       .00
                         .00       .00       .00       .00       .00       .00       .00       .00       .00       .00
                         .00       .00       .00       .00       .00       .00       .00       .00       .00       .00
                         .00       .00       .00       .00       .00       .00       .00       .00       .00       .00
                         .00       .00       .00       .00       .00       .00       .00       .00       .00       .00
                         .00       .00       .00       .00       .00       .00       .00       .00       .00       .00
                         .00       .00       .00       .00       .00       .00       .00       .00       .00       .00
                         .00       .00       .00       .00       .00       .00       .00       .00       .00       .00
                         .00       .00       .00       .00       .00       .00       .00       .00       .00       .00
                         .00       .00       .00       .00       .00       .00       .01       .01       .01       .01
                         .01       .01       .01       .01       .01       .01       .01       .01       .06       .06
                         .06       .06       .06       .06       .01       .01       .01       .01       .01       .01
                         .01       .01       .01       .01       .01       .01       .00       .00       .00       .00
                         .00       .00       .00       .00       .00       .00       .00       .00       .00       .00
                         .00       .00       .00       .00       .00       .00       .00       .00       .00       .00
                         .00       .00       .00       .00       .00       .00       .00       .00       .00       .00
                         .00       .00       .00       .00       .00       .00       .00       .00       .00       .00
                         .00       .00       .00       .00       .00       .00       .00       .00       .00       .00
                         .00       .00       .00       .00       .00       .00       .00       .00       .00       .00
                         .00       .00       .00       .00       .00       .00       .00       .00       .00       .00
                         .00       .00       .00       .00       .00       .00       .00       .00       .00       .00
                         .00       .00       .00       .00       .00       .00       .00       .00       .00       .00
                         .00       .00       .00       .00       .00       .00       .00       .00       .00       .00
                         .00       .00       .00       .00       .00       .00       .00       .00       .00       .00
                         .00       .00       .00       .00       .00       .00       .00       .00       .00       .00
                         .00       .00       .00       .00       .00       .00       .00       .00

 347 LG              GREEN AND AMPT LOSS RATE
                           STRTL          .50   STARTING LOSS
                             DTH          .00   MOISTURE DEFICIT
                            PSIF         3.99   WETTING FRONT SUCTION
                           XKSAT          .64   HYDRAULIC CONDUCTIVITY
                           RTIMP          .00   PERCENT IMPERVIOUS AREA

 348 UC              CLARK UNITGRAPH
                              TC          .88   TIME OF CONCENTRATION
                               R          .61   STORAGE COEFFICIENT

 349 UA              ACCUMULATED-AREA VS. TIME,  11 ORDINATES
                          .0       1.6       5.0      10.6      19.5      32.0      44.0      56.0      70.0      82.0
                       100.0

                                                      ***

                                           UNIT HYDROGRAPH PARAMETERS
                                        CLARK   TC=    .88 HR,        R=   .61 HR
                                       SNYDER   TP=    .91 HR,       CP=   .85

                                                UNIT HYDROGRAPH
                                           46 END-OF-PERIOD ORDINATES
                  5.        19.        44.        80.       131.       188.       238.       286.       330.       373.
                404.       385.       336.       293.       256.       223.       194.       170.       148.       129.
                112.        98.        86.        75.        65.        57.        49.        43.        38.        33.
                 29.        25.        22.        19.        17.        14.        13.        11.        10.         8.
                  7.         6.         6.         5.         4.         4.

     ***               ***               ***               ***               ***

                             HYDROGRAPH AT STATION   IR59B

  TOTAL RAINFALL =    4.07, TOTAL LOSS =    2.84, TOTAL EXCESS =    1.23

  PEAK FLOW       TIME                                    MAXIMUM AVERAGE FLOW
                                             6-HR         24-HR          72-HR        24.92-HR
```

```
+   (CFS)       (HR)
                              (CFS)
+     435.     12.67                         87.          22.          21.          21.
                            (INCHES)      1.224        1.224        1.224        1.224
                            (AC-FT)          43.          43.          43.          43.

                            CUMULATIVE AREA =       .66 SQ MI
```

```
*** *** *** *** *** *** *** *** *** *** *** *** *** *** *** *** *** *** *** *** *** *** *** *** *** *** *** *** *** *** *** *** ***

                 **************
                 *            *
  351 KK         *   CPHV12   *
                 *            *
                 **************

                               COMBINE ROUTED FLOW FROM COMPUTATION POINT CPHV11 TO RUNOFF FROM SUB-BASIN
                               IR59B

  354 HC         HYDROGRAPH COMBINATION
                       ICOMP           2  NUMBER OF HYDROGRAPHS TO COMBINE

                                                                       ***

         ***            ***            ***            ***            ***

                               HYDROGRAPH AT STATION    CPHV12

  PEAK FLOW      TIME                                 MAXIMUM AVERAGE FLOW
                                            6-HR         24-HR        72-HR       24.92-HR
+   (CFS)        (HR)
                              (CFS)
+     870.      12.92                        238.          77.          75.          75.
                            (INCHES)        .747         .970         .981         .981
                            (AC-FT)          118.         153.         155.         155.

                            CUMULATIVE AREA =      2.96 SQ MI
```

```
*** *** *** *** *** *** *** *** *** *** *** *** *** *** *** *** *** *** *** *** *** *** *** *** *** *** *** *** *** *** *** *** ***

                 **************
                 *            *
  355 KK         *   DIHV12   *
                 *            *
                 **************

                               THE WESTERN EDGE OF SUB-BASIN IR59B WHICH IS ALSO THE WESTERN EDGE OF THE
                               STUDY AREA IS BOUNDED  BY A CONCRETE IRRIGATION CANAL AND EARTHEN ROADWAY
                               THE EARTHEN ROADWAY HAS A CAPACITY TO CONVEY  APPROXIMATELY 65 CFS TO THE
                               NORTH WEST BEFORE THE CONCRETE IRRIGATION CANAL IS OVERTOPPED AND FLOW
                               CONTINUES TO DRAIN TO THE WEST. THEREFORE APPROXIMATELY 65 CFS WILL
                               CONCENTRATE AT COMPUTATION POINT CPHV12. AT COMPUTATION POINT CPHV12
                               A DIP SECTION IN THE EARTHEN ROADWAY WILL DRAIN APPROXIMATELY 684 CFS
                               TO THE WEST. ALL OF THE FLOW CONCENTRATED AT COMPUTATION CPHV12 PASSES
                               OUT OF THE STUDY AREA.

   DT          DIVERSION
                     ISTAD        RCHV12  DIVERSION HYDROGRAPH IDENTIFICATION

   DI                INFLOW          .00     100.00     200.00     400.00     600.00     800.00     900.00    1000.00    1200.00    1400.00

   DQ          DIVERTED FLOW         .00     100.00     200.00     400.00     600.00     800.00     900.00    1000.00    1200.00    1400.00

                                                                       ***

         ***            ***            ***            ***            ***

                               DIVERSION HYDROGRAPH    RCHV12

  PEAK FLOW      TIME                                 MAXIMUM AVERAGE FLOW
                                            6-HR         24-HR        72-HR       24.92-HR
+   (CFS)        (HR)
                              (CFS)
+     870.      12.92                        238..         77.          75.          75.
                            (INCHES)        .747         .970         .981         .981
                            (AC-FT)          118.         153.         155.         155.

                            CUMULATIVE AREA =      2.96 SQ MI

         ***            ***            ***            ***            ***

                               HYDROGRAPH AT STATION    DIHV12

  PEAK FLOW      TIME                                 MAXIMUM AVERAGE FLOW
                                            6-HR         24-HR        72-HR       24.92-HR
+   (CFS)        (HR)
```

```
                              (CFS)
+       0.        .00                          0.           0.           0.           0.
                            (INCHES)        .000         .000         .000         .000
                            (AC-FT)            0.           0.           0.           0.

                            CUMULATIVE AREA =      2.96 SQ MI
```

```
*** *** *** *** *** *** *** *** *** *** *** *** *** *** *** *** *** *** *** *** *** *** *** *** *** *** *** *** *** *** *** *** ***

                 **************
                 *            *
  368 KK         *   REED47   *
                 *            *
                 **************

                               RETRIVE DIVERTED FLOW FROM COMPUTATION POINT CPHV11

  370 DR         RETRIEVE DIVERSION HYDROGRAPH
                      ISTAD        DIR55B  DIVERSION HYDROGRAPH IDENTIFICATION

                                                                       ***

         ***            ***            ***            ***            ***

                               HYDROGRAPH AT STATION    REED47

  PEAK FLOW      TIME                                 MAXIMUM AVERAGE FLOW
                                            6-HR         24-HR        72-HR       24.92-HR
+   (CFS)        (HR)
                              (CFS)
+     331.      12.08                         44.          13.          13.          13.
                            (INCHES)        .139         .165         .165         .165
                            (AC-FT)           22.          26.          26.          26.

                            CUMULATIVE AREA =       .00 SQ MI
```

```
*** *** *** *** *** *** *** *** *** *** *** *** *** *** *** *** *** *** *** *** *** *** *** *** *** *** *** *** *** *** *** *** ***

                 **************
                 *            *
  371 KK         *   RRHV23   *
                 *            *
                 **************

                               ROUTE DIVERTED FLOW FROM COMPUTATION POINT CPHV11 THROUGH SUB-BASIN IR55B

                 HYDROGRAPH ROUTING DATA

  373 RS           STORAGE ROUTING
                         NSTPS           19  NUMBER OF SUBREACHES
                          ITYP         ELEV  TYPE OF INITIAL CONDITION
                        RSVRIC      1061.00  INITIAL CONDITION
                             X          .00  WORKING R AND D COEFFICIENT

  374 RC           NORMAL DEPTH CHANNEL
                           ANL         .070  LEFT OVERBANK N-VALUE
                          ANCH         .070  MAIN CHANNEL N-VALUE
                           ANR         .070  RIGHT OVERBANK N-VALUE
                         RLNTH        4800.  REACH LENGTH
                           SEL        .0060  ENERGY SLOPE
                         ELMAX           .0  MAX. ELEV. FOR STORAGE/OUTFLOW CALCULATION

                                          CROSS-SECTION DATA
                          --- LEFT OVERBANK --- + ------ MAIN CHANNEL ------- + --- RIGHT OVERBANK ---
  376 RY        ELEVATION  1062.00   1061.00   1061.00   1061.00   1061.00   1061.00   1061.00   1062.00
  375 RX        DISTANCE       .00    240.00    470.00    620.00    830.00   1200.00   1520.00   1740.00

                                                                       ***

                                    COMPUTED STORAGE-OUTFLOW-ELEVATION DATA

           STORAGE        .00      7.49     15.12     22.89     30.81     38.86     47.05     55.38     63.86     72.47
           OUTFLOW        .00     15.64     49.83     98.30    159.38    232.08    315.76    409.95    514.30    628.55
         ELEVATION    1061.00   1061.05   1061.11   1061.16   1061.21   1061.26   1061.32   1061.37   1061.42   1061.47

           STORAGE      81.22     90.12     99.15    108.33    117.64    127.10    136.69    146.43    156.30    166.32
           OUTFLOW     752.48    885.93   1028.78   1180.92   1342.26   1512.76   1692.34   1880.99   2078.66   2285.34
         ELEVATION    1061.53   1061.58   1061.63   1061.68   1061.74   1061.79   1061.84   1061.89   1061.95   1062.00

*** WARNING *** MODIFIED PULS ROUTING MAY BE NUMERICALLY UNSTABLE FOR OUTFLOWS BETWEEN       886. TO      2285.
                THE ROUTED HYDROGRAPH SHOULD BE EXAMINED FOR OSCILLATIONS OR OUTFLOWS GREATER THAN PEAK INFLOWS.
                THIS CAN BE CORRECTED BY DECREASING THE TIME INTERVAL OR INCREASING STORAGE (USE A LONGER REACH.)

         ***            ***            ***            ***            ***

                               HYDROGRAPH AT STATION    RRHV23

  PEAK FLOW      TIME                                 MAXIMUM AVERAGE FLOW
```

	PEAK FLOW	TIME		6-HR	24-HR	72-HR	24.92-HR
+	(CFS)	(HR)					
			(CFS)				
+	128.	13.92		40.	12.	12.	12.
			(INCHES)	.000	.000	.000	.000
			(AC-FT)	20.	24.	24.	24.

PEAK STORAGE TIME MAXIMUM AVERAGE STORAGE

	PEAK STORAGE	TIME	6-HR	24-HR	72-HR	24.92-HR
+	(AC-FT)	(HR)				
	1.	13.92	1.	0.	0.	0.

PEAK STAGE TIME MAXIMUM AVERAGE STAGE

	PEAK STAGE	TIME	6-HR	24-HR	72-HR	24.92-HR
+	(FEET)	(HR)				
	1061.18	13.92	1061.08	1061.03	1061.03	1061.03

CUMULATIVE AREA = .00 SQ MI

*** ***

377 KK *************
* IR55B *
****

SUB-BASIN IR55B -LAND USE - AGRICULTURE;MINOR DEVELOPMENT
24-HOUR TYPE II RAINFALL WAS USED TO FIND TC & R FOR THIS BASIN
THIS BASIN USED RAINFALL REDUCTION FACTOR OF .97

SUBBASIN RUNOFF DATA

381 BA SUBBASIN CHARACTERISTICS
TAREA .53 SUBBASIN AREA

PRECIPITATION DATA

16 PB STORM 4.07 BASIN TOTAL PRECIPITATION

16 PI INCREMENTAL PRECIPITATION PATTERN

.00	.00	.00	.00	.00	.00	.00	.00	.00	.00
.00	.00	.00	.00	.00	.00	.00	.00	.00	.00
.00	.00	.00	.00	.00	.00	.00	.00	.00	.00
.00	.00	.00	.00	.00	.00	.00	.00	.00	.00
.00	.00	.00	.00	.00	.00	.00	.00	.00	.00
.00	.00	.00	.00	.00	.00	.00	.00	.00	.00
.00	.00	.00	.00	.00	.00	.00	.00	.00	.00
.00	.00	.00	.00	.00	.00	.00	.00	.00	.00
.00	.00	.00	.00	.00	.00	.00	.00	.00	.00
.00	.00	.00	.00	.00	.00	.00	.00	.00	.00
.00	.00	.00	.00	.00	.00	.00	.00	.00	.00
.00	.00	.00	.00	.00	.00	.00	.00	.00	.00
.00	.00	.00	.00	.00	.00	.01	.01	.01	.01
.01	.01	.01	.01	.01	.01	.01	.01	.06	.06
.06	.06	.06	.06	.01	.01	.01	.01	.01	.01
.01	.01	.01	.01	.01	.01	.00	.00	.00	.00
.00	.00	.00	.00	.00	.00	.00	.00	.00	.00
.00	.00	.00	.00	.00	.00	.00	.00	.00	.00
.00	.00	.00	.00	.00	.00	.00	.00	.00	.00
.00	.00	.00	.00	.00	.00	.00	.00	.00	.00
.00	.00	.00	.00	.00	.00	.00	.00	.00	.00
.00	.00	.00	.00	.00	.00	.00	.00	.00	.00
.00	.00	.00	.00	.00	.00	.00	.00	.00	.00
.00	.00	.00	.00	.00	.00	.00	.00	.00	.00
.00	.00	.00	.00	.00	.00	.00	.00	.00	.00
.00	.00	.00	.00	.00	.00	.00	.00	.00	.00
.00	.00	.00	.00	.00	.00	.00	.00	.00	.00
.00	.00	.00	.00	.00	.00	.00	.00	.00	.00
.00	.00	.00	.00	.00	.00	.00	.00		

382 LG GREEN AND AMPT LOSS RATE
STRTL .48 STARTING LOSS
DTH .08 MOISTURE DEFICIT
PSIF 3.65 WETTING FRONT SUCTION
XKSAT .50 HYDRAULIC CONDUCTIVITY
RTIMP 5.00 PERCENT IMPERVIOUS AREA

383 UC CLARK UNITGRAPH
TC .85 TIME OF CONCENTRATION
R .55 STORAGE COEFFICIENT

384 UA ACCUMULATED-AREA VS. TIME, 11 ORDINATES

.0	3.0	5.0	8.0	12.0	20.0	43.0	75.0	90.0	96.0
100.0									

***

UNIT HYDROGRAPH PARAMETERS
CLARK TC= .85 HR, R= .55 HR
SNYDER TP= .71 HR, CP= .80

UNIT HYDROGRAPH
42 END-OF-PERIOD ORDINATES

8.	21.	32.	47.	73.	145.	272.	370.	388.	367.
330.	286.	246.	212.	182.	157.	135.	116.	100.	86.
74.	63.	55.	47.	40.	35.	30.	26.	22.	19.
16.	14.	12.	10.	9.	8.	7.	6.	5.	4.
4.	3.								

*** *** *** *** ***

HYDROGRAPH AT STATION IR55B

TOTAL RAINFALL = 4.07, TOTAL LOSS = 2.72, TOTAL EXCESS = 1.35

PEAK FLOW TIME MAXIMUM AVERAGE FLOW

	PEAK FLOW	TIME		6-HR	24-HR	72-HR	24.92-HR
+	(CFS)	(HR)					
			(CFS)				
+	415.	12.50		73.	19.	18.	18.
			(INCHES)	1.287	1.346	1.347	1.347
			(AC-FT)	36.	38.	38.	38.

CUMULATIVE AREA = .53 SQ MI

*** ***

386 KK *************
* CIR55B *
****

COMBINE ROUTED DIVERTED FLOW FROM COMPUTATION POINT CPHV11 WITH RUNOFF FROM
SUB-BASIN IR55B

389 HC HYDROGRAPH COMBINATION
ICOMP 2 NUMBER OF HYDROGRAPHS TO COMBINE

***

*** *** *** *** ***

HYDROGRAPH AT STATION CIR55B

PEAK FLOW TIME MAXIMUM AVERAGE FLOW

	PEAK FLOW	TIME		6-HR	24-HR	72-HR	24.92-HR
+	(CFS)	(HR)					
			(CFS)				
+	417.	12.50		110.	31.	30.	30.
			(INCHES)	1.927	2.200	2.201	2.201
			(AC-FT)	54.	62.	62.	62.

CUMULATIVE AREA = .53 SQ MI

*** ***

390 KK *************
* DIR55B *
****

THE WESTERN EDGE OF SUB-BASIN IR55B WHICH IS ALSO THE WESTERN EDGE OF THE
STUDY AREA IS BOUNDED BY AN EARTHEN IRRIGATION CANAL. MINOR CONTAINMENT OF
RUNOFF AND ROUTED FLOW WILL BE REALIZED. THEREFORE TOTAL FLOW AT COMPUTATION
POINT CIR55B IS DIVERTED BECAUSE FLOW FROM THIS POINT DOES NOT CONTRIBUTE
TO RUNOFF COMPUTATIONS DOWNSTREAM.

DT DIVERSION
ISTAD RCIREB DIVERSION HYDROGRAPH IDENTIFICATION

DI	INFLOW	.00	100.00	200.00	400.00	600.00	800.00
DQ	DIVERTED FLOW	.00	100.00	200.00	400.00	600.00	800.00

***

*** *** *** *** ***

DIVERSION HYDROGRAPH RCIREB

PEAK FLOW TIME MAXIMUM AVERAGE FLOW

	PEAK FLOW	TIME		6-HR	24-HR	72-HR	24.92-HR
+	(CFS)	(HR)					
			(CFS)				
+	417.	12.50		110.	31.	30.	30.
			(INCHES)	1.927	2.200	2.201	2.201
			(AC-FT)	54.	62.	62.	62.

CUMULATIVE AREA = .53 SQ MI

*** *** *** *** ***

HYDROGRAPH AT STATION DIR55B

PEAK FLOW (CFS)	TIME (HR)	MAXIMUM AVERAGE FLOW	6-HR	24-HR	72-HR	24.92-HR
0.	.00	(CFS)	0.	0.	0.	0.
		(INCHES)	.000	.000	.000	.000
		(AC-FT)	0.	0.	0.	0.

CUMULATIVE AREA = .53 SQ MI

1

RUNOFF SUMMARY
FLOW IN CUBIC FEET PER SECOND
TIME IN HOURS, AREA IN SQUARE MILES

OPERATION	STATION	PEAK FLOW	TIME OF PEAK	AVERAGE FLOW FOR MAXIMUM PERIOD 6-HOUR	24-HOUR	72-HOUR	BASIN AREA	MAXIMUM STAGE	TIME OF MAX STAGE
HYDROGRAPH AT	WC16B	33.	12.08	4.	1.	1.	.02		
ROUTED TO	RRHV1	32.	12.17	4.	1.	1.	.02	1141.45	12.17
HYDROGRAPH AT	WC17B	35.	12.17	5.	1.	1.	.04		
ROUTED TO	RRHV2	35.	12.17	5.	1.	1.	.04	1140.32	12.17
2 COMBINED AT	CPHV1	67.	12.17	9.	2.	2.	.06		
ROUTED TO	RRHV3	66.	12.17	9.	2.	2.	.06	1137.82	12.17
ROUTED TO	RRHV4	65.	12.25	9.	2.	2.	.06	1141.72	12.25
HYDROGRAPH AT	WC18B	72.	12.17	9.	2.	2.	.06		
ROUTED TO	RRHV5	71.	12.17	9.	2.	2.	.06	1136.73	12.17
HYDROGRAPH AT	WC19B	350.	12.08	44.	14.	13.	.21		
ROUTED TO	RRHV6	349.	12.08	44.	14.	13.	.21	1138.57	12.08
HYDROGRAPH AT	PM3B	46.	12.17	5.	1.	1.	.06		
4 COMBINED AT	CPHV2	516.	12.08	67.	20.	19.	.39		
ROUTED TO	RRHV7	508.	12.17	67.	20.	19.	.39	1127.74	12.17
HYDROGRAPH AT	WC20B	21.	12.08	3.	1.	1.	.01		
ROUTED TO	RRHV8	21.	12.17	3.	1.	1.	.01	1132.45	12.17
2 COMBINED AT	CPHV3	528.	12.17	70.	20.	20.	.40		
ROUTED TO	RRHV9	523.	12.17	70.	20.	20.	.40	1123.09	12.17
HYDROGRAPH AT	WC21B	27.	12.17	4.	1.	1.	.02		
ROUTED TO	RRHV10	26.	12.25	4.	1.	1.	.02	1129.29	12.25
HYDROGRAPH AT	PM4B	151.	12.08	17.	5.	5.	.14		
3 COMBINED AT	CPHV4	695.	12.17	91.	26.	25.	.57		
ROUTED TO	RRHV11	692.	12.17	91.	26.	25.	.57	1118.75	12.17
HYDROGRAPH AT	WC22B	9.	12.08	1.	0.	0.	.01		
ROUTED TO	RRHV12	9.	12.25	1.	0.	0.	.01	1123.62	12.25
2 COMBINED AT	CPHV5	700.	12.17	92.	26.	25.	.57		
ROUTED TO	RRHV13	686.	12.17	92.	26.	25.	.57	1115.86	12.17
HYDROGRAPH AT	WC23B	604.	12.17	97.	32.	31.	.40		
ROUTED TO	RRHV14	604.	12.17	97.	32.	31.	.40	1121.74	12.17
2 COMBINED AT	CPHV6	1290.	12.17	189.	58.	56.	.97		
ROUTED TO	RRHV15	1217.	12.25	188.	58.	56.	.97	1106.76	12.25
HYDROGRAPH AT	PM5B	134.	12.25	18.	5.	5.	.13		
2 COMBINED AT	CPHV7	1351.	12.25	207.	63.	61.	1.10		
ROUTED TO	HV7BSN	20.	12.17	20.	12.	12.	1.10	6.13	17.92
ROUTED TO	RRHV16	20.	12.42	20.	12.	12.	1.10		
HYDROGRAPH AT	A43A2B	127.	12.17	18.	5.	5.	.09		
ROUTED TO	RRHV17	123.	12.17	18.	5.	5.	.09	1099.44	12.17
ROUTED TO	RRHV18	71.	12.75	18.	5.	5.	.09	1086.21	12.75
HYDROGRAPH AT	NWSM1B	168.	12.08	28.	9.	9.	.13		
ROUTED TO	RR43B1	166.	12.17	28.	9.	9.	.13	1168.55	12.17
ROUTED TO	RR43B2	161.	12.17	28.	9.	9.	.13	1118.16	12.17
HYDROGRAPH AT	A43A1B	235.	12.08	25.	7.	7.	.17		
2 COMBINED AT	CPHV9	382.	12.08	52.	16.	16.	.30		
ROUTED TO	RRHV19	348.	12.33	52.	16.	16.	.30	1091.34	12.33
2 COMBINED AT	CPHV10	373.	12.42	70.	22.	21.	.39		
ROUTED TO	RRHV20	337.	12.58	70.	22.	21.	.39	1075.40	12.58
HYDROGRAPH AT	ED47B	1159.	12.08	112.	31.	30.	.81		
3 COMBINED AT									

+		CPHV11	1197.	12.08	199.	64.	62.	2.30	
+	DIVERSION TO	DIR55B	331.	12.08	44.	13.	13.	2.30	
+	HYDROGRAPH AT	DFED47	866.	12.08	155.	51.	49.	2.30	
+	ROUTED TO	RRHV21	752.	12.33	155.	50.	48.	2.30	
+								1060.39	12.33
+	ROUTED TO	RRHV22	549.	13.00	153.	56.	54.	2.30	
+								1039.82	13.00
+	HYDROGRAPH AT	IR59B	435.	12.67	87.	22.	21.	.66	
+	2 COMBINED AT	CPHV12	870.	12.92	238.	77.	75.	2.96	
+	DIVERSION TO	RCHV12	870.	.00	238.	77.	75.	2.96	
+	HYDROGRAPH AT	DIHV12	0.	.00	0.	0.	0.	2.96	
+	HYDROGRAPH AT	REED47	331.	12.08	44.	13.	13.	.00	
+	ROUTED TO	RRHV23	128.	13.92	40.	12.	12.	.00	
+								1061.18	13.92
+	HYDROGRAPH AT	IR55B	415.	12.50	73.	19.	18.	.53	
+	2 COMBINED AT	CIR55B	417.	12.50	110.	31.	30.	.53	
+	DIVERSION TO	RCIREB	417.	.00	110.	31.	30.	.53	
+	HYDROGRAPH AT	DIR55B	0.	.00	0.	0.	0.	.53	

1

SUMMARY OF KINEMATIC WAVE - MUSKINGUM-CUNGE ROUTING
(FLOW IS DIRECT RUNOFF WITHOUT BASE FLOW)

ISTAQ	ELEMENT	DT	PEAK	TIME TO PEAK	VOLUME	INTERPOLATED TO COMPUTATION INTERVAL DT	PEAK	TIME TO PEAK	VOLUME
		(MIN)	(CFS)	(MIN)	(IN)	(MIN)	(CFS)	(MIN)	(IN)
RRHV16	MANE	3.48	20.00	744.84	.41	5.00	20.00	745.00	.41

CONTINUITY SUMMARY (AC-FT) - INFLOW= .2456E+02 EXCESS= .0000E+00 OUTFLOW= .2437E+02 BASIN STORAGE= .2038E+00 PERCENT ERROR= -.1

*** NORMAL END OF HEC-1 ***

APPENDIX H: Haestad Calculations for Recommended Plan

STORM DRAINS	Length	Upstream Invert	Downstream Invert	Allowable HW Elev	Allowable TW Elev	Q	HEC-1 ID	SIZE	Velocity
51st Ave - Dobbins to South Mountain	2675	1024.73	1021.03	1030.23	1026.81	60	RDR51A	48	4.77
51st Ave - Elliot to Dobbins	4700	1028.66	1024.73	1031.45	1026.81	20	RER47B	36	3.82
51st Ave - South Mountain to Baseline	2925	1021.03	998.00	1032.00	1006.20	299	RDR51B	84	11.82
67th Ave - Vineyard to Salt River	3870	984.00	977.50	994.00	984.00	137	RCD4C1	66	5.77
Baseline Road - 51st Ave to L.A.C.C.	1759	998.00	994.07	1002.16	998.07	50	DBR51	48	3.98
Carver Hills Area	3382	1088.00	1074.00	1094.10	1078.00	20	RRHV16	36	2.83
Dobbins Road - 43rd Ave to 47th Ave	2945	1040.50	1030.61	1048.30	1038.00	20	ROA51A	36	2.83
Dobbins Road - 47th Ave to 51st Ave	2726	1030.61	1026.73	1038.00	1032.10	20	ROA51B	36	2.83
Elliot Road - 49th Ave to 51st Ave	878	1033.07	1028.66	1039.20	1031.45	20	RER47B	36	2.92
Western Canal @ 49th Ave	381	1047.00	1033.00	1053.00	136.20	777	ER47B	3-8x5	10.12

CHANNELS	Length	Upstream Invert	Downstream Invert	Bottom Width	Side Slope	Q	HEC-1 ID	Depth	Top Width	Velocity
67th Ave - Vineyard to L.A.C.C	3466	991.00	985.80	10	5:1	59	RCD1C2	1.73	27.33	1.82
Western Canal Channel - 43rd to 47th	2600	1073.50	1053.00	10	5:1	400	*	2.92	39.15	5.58
Western Canal Channel - 47th to 49th	1644	1052.00	1047.00	20	5:1	777	ER47B	4.17	61.68	4.56

* Prorated from ER47B

DETENTION BASINS	Top Area	Bottom Area	Water Depth	Overall Depth	Bottom Elevation	Q	Water Surface Elevation
43rd Ave & Dobbins Road	10	7.2	7.82	10	1041.0	20	1048.9
44th Ave & Carver Road	20	15.9	6.13	10	1088.0	20	1094.1
49th Ave & Elliot Road	10	8.3	3.19	6	1033.0	20	1036.2
51st Ave & Baseline Road	10	7.7	4.16	8	998.0	50	1002.2
51st Ave & Dobbins Road	10	8.5	2.08	5	1024.7	20	1026.8

HAESTAD CALCULATIONS

CULVERT MASTER

51st Avenue – Dobbins Road to South Mountain
51st Avenue – Elliot Road to Dobbins Road
51st Avenue – South Mountain to Baseline Road
67th Avenue – Vineyard to Salt River
Baseline Road – 51st Avenue to Laveen Area Conveyance Chann
Carver Hills Area
Dobbins Road – 43rd Avenue to 47th Avenue
Dobbins Road – 47th Avenue to 51st Avenue
Elliot Road – 47th Avenue to 51st Avenue
Western Canal @ 49th Avenue

FLOWMASTER

67th Avenue – Vineyard to Laveen Area Conveyance Channel
Western Canal Channel – 43rd Avenue to 47th Avenue
Western Canal Channel – 47th Avenue to 49th Avenue

Culvert Calculator Report
51st Ave - Elliot to Dobbins

Solve For: Headwater Elevation

Culvert Summary			
Allowable HW Elevation	1,036.00 ft	Headwater Depth/ Height	0.93
Computed Headwater Elevation	1,031.45 ft	Discharge	20.00 cfs
Inlet Control HW Elev	1,030.73 ft	Tailwater Elevation	1,026.81 ft
Outlet Control HW Elev	1,031.45 ft	Control Type	Outlet Control

Grades			
Upstream Invert	1,028.66 ft	Downstream Invert	1,024.73 ft
Length	4,700.00 ft	Constructed Slope	0.000836 ft/ft

Hydraulic Profile			
Profile	M2	Depth, Downstream	2.08 ft
Slope Type	Mild	Normal Depth	2.57 ft
Flow Regime	Subcritical	Critical Depth	1.44 ft
Velocity Downstream	3.82 ft/s	Critical Slope	0.004184 ft/ft

Section			
Section Shape	Circular	Mannings Coefficient	0.013
Section Material	Concrete	Span	3.00 ft
Section Size	36 inch	Rise	3.00 ft
Number Sections	1		

Outlet Control Properties			
Outlet Control HW Elev	1,031.45 ft	Upstream Velocity Head	0.15 ft
Ke	0.50	Entrance Loss	0.08 ft

Inlet Control Properties			
Inlet Control HW Elev	1,030.73 ft	Flow Control	Unsubmerged
Inlet Type	Square edge w/headwall	Area Full	7.1 ft²
K	0.00980	HDS 5 Chart	1
M	2.00000	HDS 5 Scale	1
C	0.03980	Equation Form	1
Y	0.67000		

Culvert Calculator Report
51st Ave - Dobbins to South Mountain

Solve For: Headwater Elevation

Culvert Summary			
Allowable HW Elevation	1,026.81 ft	Headwater Depth/ Height	1.37
Computed Headwater Elevation	1,030.23 ft	Discharge	60.00 cfs
Inlet Control HW Elev	1,028.25 ft	Tailwater Elevation	1,025.03 ft
Outlet Control HW Elev	1,030.23 ft	Control Type	Outlet Control

Grades			
Upstream Invert	1,024.73 ft	Downstream Invert	1,021.03 ft
Length	2,675.00 ft	Constructed Slope	0.001383 ft/ft

Hydraulic Profile			
Profile	Pressure	Depth, Downstream	4.00 ft
Slope Type	N/A	Normal Depth	N/A ft
Flow Regime	N/A	Critical Depth	2.33 ft
Velocity Downstream	4.77 ft/s	Critical Slope	0.004213 ft/ft

Section			
Section Shape	Circular	Mannings Coefficient	0.013
Section Material	Concrete	Span	4.00 ft
Section Size	48 inch	Rise	4.00 ft
Number Sections	1		

Outlet Control Properties			
Outlet Control HW Elev	1,030.23 ft	Upstream Velocity Head	0.35 ft
Ke	0.50	Entrance Loss	0.18 ft

Inlet Control Properties			
Inlet Control HW Elev	1,028.25 ft	Flow Control	Unsubmerged
Inlet Type	Square edge w/headwall	Area Full	12.6 ft²
K	0.00980	HDS 5 Chart	1
M	2.00000	HDS 5 Scale	1
C	0.03980	Equation Form	1
Y	0.67000		

Culvert Calculator Report
67th Avenue - Vineyard to Salt River

Solve For: Section Size

Culvert Summary			
Allowable HW Elevation	994.00 ft	Headwater Depth/ Height	1.03
Computed Headwater Elevation	989.66 ft	Discharge	137.00 cfs
Inlet Control HW Elev	988.94 ft	Tailwater Elevation	983.00 ft
Outlet Control HW Elev	989.66 ft	Control Type	Outlet Control

Grades			
Upstream Invert	984.00 ft	Downstream Invert	977.50 ft
Length	3,870.00 ft	Constructed Slope	0.001680 ft/ft

Hydraulic Profile			
Profile	M1	Depth, Downstream	5.50 ft
Slope Type	Mild	Normal Depth	4.49 ft
Flow Regime	Subcritical	Critical Depth	3.26 ft
Velocity Downstream	5.77 ft/s	Critical Slope	0.003832 ft/ft

Section			
Section Shape	Circular	Mannings Coefficient	0.013
Section Material	Concrete	Span	5.50 ft
Section Size	66 inch	Rise	5.50 ft
Number Sections	1		

Outlet Control Properties			
Outlet Control HW Elev	989.66 ft	Upstream Velocity Head	0.62 ft
Ke	0.50	Entrance Loss	0.31 ft

Inlet Control Properties			
Inlet Control HW Elev	988.94 ft	Flow Control	Unsubmerged
Inlet Type	Square edge w/headwall	Area Full	23.8 ft²
K	0.00980	HDS 5 Chart	1
M	2.00000	HDS 5 Scale	1
C	0.03980	Equation Form	1
Y	0.67000		

© Haestad Methods, Inc.
HDR Engineering, Inc.
37 Brookside Road Waterbury, CT 06708 USA (203) 755-1666

Culvert Calculator Report
51st Ave - South Mountain to Baseline

Solve For: Section Size

Culvert Summary			
Allowable HW Elevation	1,032.00 ft	Headwater Depth/ Height	1.81
Computed Headwater Elevation	1,031.00 ft	Discharge	299.00 cfs
Inlet Control HW Elev	1,031.00 ft	Tailwater Elevation	1,002.16 ft
Outlet Control HW Elev	1,030.16 ft	Control Type	Inlet Control

Grades			
Upstream Invert	1,021.03 ft	Downstream Invert	998.00 ft
Length	2,925.00 ft	Constructed Slope	0.007874 ft/ft

Hydraulic Profile			
Profile	S2	Depth, Downstream	4.53 ft
Slope Type	Steep	Normal Depth	4.53 ft
Flow Regime	Supercritical	Critical Depth	4.76 ft
Velocity Downstream	14.30 ft/s	Critical Slope	0.007281 ft/ft

Section			
Section Shape	Circular	Mannings Coefficient	0.013
Section Material	Concrete	Span	5.50 ft
Section Size	66 inch	Rise	5.50 ft
Number Sections	1		

Outlet Control Properties			
Outlet Control HW Elev	1,030.16 ft	Upstream Velocity Head	2.91 ft
Ke	0.50	Entrance Loss	1.46 ft

Inlet Control Properties			
Inlet Control HW Elev	1,031.00 ft	Flow Control	Submerged
Inlet Type	Square edge w/headwall	Area Full	23.8 ft²
K	0.00980	HDS 5 Chart	1
M	2.00000	HDS 5 Scale	1
C	0.03980	Equation Form	1
Y	0.67000		

© Haestad Methods, Inc.
HDR Engineering, Inc.
37 Brookside Road Waterbury, CT 06708 USA (203) 755-1666

Culvert Calculator Report
Carver Hills

Solve For: Headwater Elevation

Culvert Summary			
Allowable HW Elevation	1,094.10 ft	Headwater Depth/ Height	0.76
Computed Headwater Elevation	1,090.27 ft	Discharge	20.00 cfs
Inlet Control HW Elev	1,090.06 ft	Tailwater Elevation	1,078.00 ft
Outlet Control HW Elev	1,090.27 ft	Control Type	Outlet Control

Grades			
Upstream Invert	1,088.00 ft	Downstream Invert	1,074.00 ft
Length	3,382.00 ft	Constructed Slope	0.004140 ft/ft

Hydraulic Profile			
Profile	CompositePressureM1	Depth, Downstream	4.00 ft
Slope Type	N/A	Normal Depth	1.44 ft
Flow Regime	Subcritical	Critical Depth	1.44 ft
Velocity Downstream	2.83 ft/s	Critical Slope	0.004184 ft/ft

Section			
Section Shape	Circular	Mannings Coefficient	0.013
Section Material	Concrete	Span	3.00 ft
Section Size	36 inch	Rise	3.00 ft
Number Sections	1		

Outlet Control Properties			
Outlet Control HW Elev	1,090.27 ft	Upstream Velocity Head	0.55 ft
Ke	0.50	Entrance Loss	0.28 ft

Inlet Control Properties			
Inlet Control HW Elev	1,090.06 ft	Flow Control	N/A
Inlet Type	Square edge w/headwall	Area Full	7.1 ft²
K	0.00980	HDS 5 Chart	1
M	2.00000	HDS 5 Scale	1
C	0.03980	Equation Form	1
Y	0.67000		

© Haestad Methods, Inc.
HDR Engineering, Inc.
37 Brookside Road Waterbury, CT 06708 USA (203) 755-1666

Culvert Calculator Report
Baseline Road - 51st Ave to L.A.C.C.

Solve For: Headwater Elevation

Culvert Summary			
Allowable HW Elevation	1,002.16 ft	Headwater Depth/ Height	0.84
Computed Headwater Elevation	1,001.37 ft	Discharge	50.00 cfs
Inlet Control HW Elev	1,001.12 ft	Tailwater Elevation	998.07 ft
Outlet Control HW Elev	1,001.37 ft	Control Type	Outlet Control

Grades			
Upstream Invert	998.00 ft	Downstream Invert	994.07 ft
Length	1,759.00 ft	Constructed Slope	0.002234 ft/ft

Hydraulic Profile			
Profile	M1	Depth, Downstream	4.00 ft
Slope Type	Mild	Normal Depth	2.55 ft
Flow Regime	Subcritical	Critical Depth	2.12 ft
Velocity Downstream	3.98 ft/s	Critical Slope	0.003977 ft/ft

Section			
Section Shape	Circular	Mannings Coefficient	0.013
Section Material	Concrete	Span	4.00 ft
Section Size	48 inch	Rise	4.00 ft
Number Sections	1		

Outlet Control Properties			
Outlet Control HW Elev	1,001.37 ft	Upstream Velocity Head	0.54 ft
Ke	0.50	Entrance Loss	0.27 ft

Inlet Control Properties			
Inlet Control HW Elev	1,001.12 ft	Flow Control	Unsubmerged
Inlet Type	Square edge w/headwall	Area Full	12.6 ft²
K	0.00980	HDS 5 Chart	1
M	2.00000	HDS 5 Scale	1
C	0.03980	Equation Form	1
Y	0.67000		

© Haestad Methods, Inc.
HDR Engineering, Inc.
37 Brookside Road Waterbury, CT 06708 USA (203) 755-1666

Culvert Calculator Report
Dobbins Road - 47th Ave to 51st Ave

Solve For: Section Size

Culvert Summary			
Allowable HW Elevation	1,038.00 ft	Headwater Depth/ Height	1.38
Computed Headwater Elevation	1,034.74 ft	Discharge	20.00 cfs
Inlet Control HW Elev	1,032.68 ft	Tailwater Elevation	1,032.10 ft
Outlet Control HW Elev	1,034.74 ft	Control Type	Outlet Control

Grades			
Upstream Invert	1,030.61 ft	Downstream Invert	1,026.73 ft
Length	2,726.00 ft	Constructed Slope	0.001423 ft/ft

Hydraulic Profile			
Profile	Pressure	Depth, Downstream	5.37 ft
Slope Type	N/A	Normal Depth	2.02 ft
Flow Regime	N/A	Critical Depth	1.44 ft
Velocity Downstream	2.83 ft/s	Critical Slope	0.004184 ft/ft

Section			
Section Shape	Circular	Mannings Coefficient	0.013
Section Material	Concrete	Span	3.00 ft
Section Size	36 inch	Rise	3.00 ft
Number Sections	1		

Outlet Control Properties			
Outlet Control HW Elev	1,034.74 ft	Upstream Velocity Head	0.12 ft
Ke	0.50	Entrance Loss	0.06 ft

Inlet Control Properties			
Inlet Control HW Elev	1,032.68 ft	Flow Control	Unsubmerged
Inlet Type	Square edge w/headwall	Area Full	7.1 ft²
K	0.00980	HDS 5 Chart	1
M	2.00000	HDS 5 Scale	1
C	0.03980	Equation Form	1
Y	0.67000		

Culvert Calculator Report
Dobbins Road - 43rd Ave to 47th Ave

Solve For: Headwater Elevation

Culvert Summary			
Allowable HW Elevation	1,048.30 ft	Headwater Depth/ Height	0.75
Computed Headwater Elevation	1,042.74 ft	Discharge	20.00 cfs
Inlet Control HW Elev	1,042.57 ft	Tailwater Elevation	1,038.00 ft
Outlet Control HW Elev	1,042.74 ft	Control Type	Outlet Control

Grades			
Upstream Invert	1,040.50 ft	Downstream Invert	1,030.61 ft
Length	2,945.00 ft	Constructed Slope	0.003358 ft/ft

Hydraulic Profile			
Profile	CompositePressureM1	Depth, Downstream	7.39 ft
Slope Type	N/A	Normal Depth	1.53 ft
Flow Regime	Subcritical	Critical Depth	1.44 ft
Velocity Downstream	2.83 ft/s	Critical Slope	0.004184 ft/ft

Section			
Section Shape	Circular	Mannings Coefficient	0.013
Section Material	Concrete	Span	3.00 ft
Section Size	36 inch	Rise	3.00 ft
Number Sections	1		

Outlet Control Properties			
Outlet Control HW Elev	1,042.74 ft	Upstream Velocity Head	0.47 ft
Ke	0.50	Entrance Loss	0.24 ft

Inlet Control Properties			
Inlet Control HW Elev	1,042.57 ft	Flow Control	Unsubmerged
Inlet Type	Square edge w/headwall	Area Full	7.1 ft²
K	0.00980	HDS 5 Chart	1
M	2.00000	HDS 5 Scale	1
C	0.03980	Equation Form	1
Y	0.67000		

Culvert Calculator Report
Western Canal @ 49th Ave

Solve For: Section Size

Culvert Summary			
Allowable HW Elevation	1,053.00 ft	Headwater Depth/ Height	1.12
Computed Headwater Elevation	1,052.59 ft	Discharge	777.00 cfs
Inlet Control HW Elev	1,052.38 ft	Tailwater Elevation	1,036.20 ft
Outlet Control HW Elev	1,052.59 ft	Control Type	Outlet Control

Grades			
Upstream Invert	1,047.00 ft	Downstream Invert	1,033.00 ft
Length	381.00 ft	Constructed Slope	0.036745 ft/ft

Hydraulic Profile			
Profile	CompositeS1S2	Depth, Downstream	3.20 ft
Slope Type	Steep	Normal Depth	1.43 ft
Flow Regime	N/A	Critical Depth	3.19 ft
Velocity Downstream	10.12 ft/s	Critical Slope	0.003657 ft/ft

Section			
Section Shape	Box	Mannings Coefficient	0.013
Section Material	Concrete	Span	8.00 ft
Section Size	8 x 5 ft	Rise	5.00 ft
Number Sections	3		

Outlet Control Properties			
Outlet Control HW Elev	1,052.59 ft	Upstream Velocity Head	1.60 ft
Ke	0.50	Entrance Loss	0.80 ft

Inlet Control Properties			
Inlet Control HW Elev	1,052.38 ft	Flow Control	Unsubmerged
Inlet Type	90 and 15 ° wingwall flares	Area Full	120.0 ft²
K	0.06100	HDS 5 Chart	8
M	0.75000	HDS 5 Scale	2
C	0.04000	Equation Form	1
Y	0.80000		

© Haestad Methods, Inc.
HDR Engineering, Inc.
37 Brookside Road Waterbury, CT 06708 USA (203) 755-1666

Culvert Calculator Report
Elliot Road - 47th Ave to 51st Ave

Solve For: Headwater Elevation

Culvert Summary			
Allowable HW Elevation	1,039.20 ft	Headwater Depth/ Height	0.76
Computed Headwater Elevation	1,035.34 ft	Discharge	20.00 cfs
Inlet Control HW Elev	1,035.13 ft	Tailwater Elevation	1,031.45 ft
Outlet Control HW Elev	1,035.34 ft	Control Type	Outlet Control

Grades			
Upstream Invert	1,033.07 ft	Downstream Invert	1,028.66 ft
Length	878.00 ft	Constructed Slope	0.005023 ft/ft

Hydraulic Profile			
Profile	CompositeS1S2	Depth, Downstream	2.79 ft
Slope Type	Steep	Normal Depth	1.36 ft
Flow Regime	N/A	Critical Depth	1.44 ft
Velocity Downstream	2.92 ft/s	Critical Slope	0.004184 ft/ft

Section			
Section Shape	Circular	Mannings Coefficient	0.013
Section Material	Concrete	Span	3.00 ft
Section Size	36 inch	Rise	3.00 ft
Number Sections	1		

Outlet Control Properties			
Outlet Control HW Elev	1,035.34 ft	Upstream Velocity Head	0.56 ft
Ke	0.50	Entrance Loss	0.28 ft

Inlet Control Properties			
Inlet Control HW Elev	1,035.13 ft	Flow Control	Unsubmerged
Inlet Type	Square edge w/headwall	Area Full	7.1 ft²
K	0.00980	HDS 5 Chart	1
M	2.00000	HDS 5 Scale	1
C	0.03980	Equation Form	1
Y	0.67000		

© Haestad Methods, Inc.
HDR Engineering, Inc.
37 Brookside Road Waterbury, CT 06708 USA (203) 755-1666

Western Canal Channel - 43rd to 47th
Worksheet for Trapezoidal Channel

Project Description	
Worksheet	Western Canal Channel - 43rc
Flow Element	Trapezoidal Channel
Method	Manning's Formula
Solve For	Channel Depth

Input Data		
Mannings Coeffic	0.035	
Slope	007880	ft/ft
Left Side Slope	0.20	V : H
Right Side Slope	0.20	V : H
Bottom Width	10.00	ft
Discharge	400.00	cfs

Results		
Depth	2.92	ft
Flow Area	71.6	ft²
Wetted Perim	39.73	ft
Top Width	39.15	ft
Critical Depth	2.49	ft
Critical Slope	0.015552	ft/ft
Velocity	5.58	ft/s
Velocity Head	0.48	ft
Specific Ener	3.40	ft
Froude Numb	0.73	
Flow Type	Subcritical	

© Haestad Methods, Inc.
HDR Engineering, Inc
37 Brookside Road Waterbury, CT 06708 USA (203) 755-1666

67th Ave - Vineyard to L.A.C.C.
Worksheet for Trapezoidal Channel

Project Description	
Worksheet	67th Ave - Vineyard to L..
Flow Element	Trapezoidal Channel
Method	Manning's Formula
Solve For	Channel Depth

Input Data		
Mannings Coeffic	0.035	
Slope	001500	ft/ft
Left Side Slope	0.20	V : H
Right Side Slope	0.20	V : H
Bottom Width	10.00	ft
Discharge	59.00	cfs

Results		
Depth	1.73	ft
Flow Area	32.3	ft²
Wetted Perim	27.67	ft
Top Width	27.33	ft
Critical Depth	0.88	ft
Critical Slope	0.020612	ft/ft
Velocity	1.82	ft/s
Velocity Head	0.05	ft
Specific Ener	1.78	ft
Froude Numb	0.30	
Flow Type	Subcritical	

© Haestad Methods, Inc.
HDR Engineering, Inc
37 Brookside Road Waterbury, CT 06708 USA (203) 755-1666

Western Canal Channel - 47th to 49th
Worksheet for Trapezoidal Channel

Project Description	
Worksheet	western Canal Channel - 47th
Flow Element	Trapezoidal Channel
Method	Manning's Formula
Solve For	Channel Depth

Input Data		
Mannings Coeffic	0.035	
Slope	003040	ft/ft
Left Side Slope	0.20	V : H
Right Side Slope	0.20	V : H
Bottom Width	20.00	ft
Discharge	777.00	cfs

Results		
Depth	4.17	ft
Flow Area	170.2	ft²
Wetted Perim	62.50	ft
Top Width	61.68	ft
Critical Depth	2.83	ft
Critical Slope	0.014381	ft/ft
Velocity	4.56	ft/s
Velocity Head	0.32	ft
Specific Ener	4.49	ft
Froude Numb	0.48	
Flow Type	Subcritical	

© Haestad Methods, Inc.
HDR Engineering, Inc
37 Brookside Road Waterbury, CT 06708 USA (203) 755-1666