ENGINEERING DIVISION
LIBRARY

Property
Flood Control District
Library
Please Return to
Phoenix, AZ 85009

PRELIMINARY DESIGN REPORT

ROADWAY BRIDGES OVER THE PROPOSED ARIZONA CANAL DIVERSION CHANNEL

PREPARED BY

MORRISON-KNUDSEN ENGINEERS, INC.

JULY, 1985

FLOOD CONTROL DISTRICT
RE
JUL 29 '85

	CH ENG		HYDRO
	ASST		Met
	ADMIN		SUSP
	C & O		
	ENGR		DESTROY
	FINANCE		
REMARKS			

A118.615

PRELIMINARY DESIGN REPORT

ROADWAY BRIDGES OVER THE PROPOSED ARIZONA CANAL DIVERSION CHANNEL

PREPARED BY

MORRISON-KNUDSEN ENGINEERS, INC.

JULY, 1985

PRELIMINARY DESIGN REPORT

ROADWAY BRIDGES OVER PROPOSED ARIZONA CANAL DIVERSION CHANNEL

GENERAL DESCRIPTION

The proposed drainage channel extending from 7th Avenue to 32nd Street along an alignment paralleling the Arizona Canal was prepared by the Corps of Engineers. Structures across the proposed channel were evaluated at nine sites where the alignment intersects local streets:

7th Avenue
Dunlap Avenue
Central Avenue
17th Street
Northern Avenue
12th Street
16th Street
Glendale Avenue
32nd Street

Bridges at Maryland Avenue and 24th Street were deleted from the original list of the structures to be evaluated.

PROJECT GOALS

The goal of this preliminary design is to evaluate and recommend the type of structure best suited to each crossing site. The criteria and requirements to be considered during this evaluation included:

A. Live load - AASHTO HS20
B. Deck width to match the existing roadway or improved roadway
C. Maintain 1' freeboard over the 100 year flood water surface elevation as defined by the Corps of Engineers
D. Clear opening under the bridge as defined in the Corps of Engineers preliminary design

E. Construction of the bridge prior to and independent of the drainage channel construction

F. A bridge configuration compatible with the drainage channel shape

G. Maintenance of street traffic during bridge and channel construction

H. Support of underground utility lines

I. Impact on the existing street surface profiles

J. Estimated cost of construction

K. Fitting construction within right-of-way limits.

BRIDGE FOUNDATION RECOMMENDATIONS

Description

The following foundation system is proposed to allow for the construction of the bridges prior to channel construction as well as to minimize the impacts on traffic and adjacent property during construction.

Abutment Foundations

The abutment foundation system consists of 3 foot ± diameter drilled piers placed to a depth of approximately 45 feet below the existing ground surface at 9 foot centers along the center line of each abutment. The drilled piers will be capped with cast-in-place abutment beams to support the bridges' superstructures. The abutments can be constructed in phases for purposes of maintaining traffic over the existing street.

Following completion of the superstructure, each bridge can be used continuously with minimal disruptions while the channel is being constructed.

During channel construction, earth will be excavated from beneath each bridge up to the inside face of the drilled piers. Following completion of the excavation; anchor units will be grouted into holes drilled into the exposed drilled pier concrete to provide support for the channel walls. After placement of the anchors, a reinforced concrete channel wall will be formed and cast between the piers (see figures 1 & 2). This construction can be done while the bridge is being used.

The drilled pier abutments will be designed as propped cantilever units with the bottom of each pier fixed into the cemented sand-gravel formation. The top of each pier will be laterally supported by the bridge superstructure which will act as a strut between the abutments.

The following items were considered and evaluated in the selection of this foundation system:

A. Bridge construction and use independent of the channel construction.
B. Use of the wall of the channel as the vertical face abutment for the bridge.
C. Ease of construction within right-of-way limits.
D. Minimum interruption of traffic during bridge/channel construction.
E. Relocation of utility lines at bridge sites.
F. The cost of the substructure and the bridge superstructures.
G. The use of existing construction technology to place drilled piers.
H. Properties of soil formation to support lateral loads located at the lower portions of the drilled piers.
I. Properties of soil formation to permit the excavation of soil to the limits shown in figure 2 without extensive use of temporary shoring or lagging.

Pier Foundations

Three of the nine bridges will have a pier at the centerline of the channel as a result of span requirements and superstructure depth limitations. The piers will be of a continuous wall type supported on spread footings.

Construction of the piers will require excavating to a depth of approximately 30 feet, and will probably require using temporary shoring, especially if traffic is to be maintained over a portion of the roadway during bridge construction. Once a pier (portion) has been constructed, the excavation may be temporarily backfilled in order to reduce the falsework required during construction of the superstructure.

BRIDGE SUPERSTRUCTURE RECOMMENDATIONS

General

The following bridge superstructure recommendations are based on preliminary designs considering existing site data, proposed channel configurations, and construction economy. Typically two or more of the following superstructure alternates have been evaluated for each site:

1) Precast, prestressed superstructure (slab, box girder, or I-girder)
2) Cast-in-place conventionally reinforced slab
3) Cast-in-place post-tensioned slab (solid or voided)

The selections were determined based on a combination of minimizing of the roadway's vertical realignment, horizontal alignment constrictions (skews and curves), lowest construction cost, supporting relocated utilities, and maintaining traffic during construction.

Recommendation Summary

Bridge Site	No. Spans	Superstructure Type
#1 7th Avenue	1	Precast prestressed concrete box girder
#2 Dunlap Avenue	2	Cast-in-place concrete slab
#3 Central Avenue	2	Cast-in-place concrete slab
#4 7th Street	1	Cast-in-place concrete slab
#5 Northern Avenue	1	Cast-in-place concrete slab
#6 12th Street	1	Cast-in-place concrete slab
#7 16th Street	2	Precast, prestressed concrete I-girder
#8 Glendale Avenue	1	Precast, prestressed concrete box girder
#11 32nd Avenue	1	Cast-in-place concrete slab

Each bridge will have a raised sidewalk to connect with the existing ones. A concrete parapet with metal pedestrian rails will run the length of each bridge, a full-height, concrete rail transition will be used at both ends of each bridge (See figure 3).

TRAFFIC CONTROL

Since most of the bridges are on major streets, completely closing the streets and rerouting traffic is not feasible. Therefore, all of the bridges are of types that can be built in stages. If warranted by peak hour characteristics, reversible lanes may help.

The traffic control plan for staged construction consists of using proper signing, striping for crossovers, and traffic control devices, in accordance with the Manual of Uniform Traffic Control Devices (MUTCD). In general, most of the congestion and inconvenience the public experiences occurs during the first week until they begin using alternate routes. For heavily used streets such as these, an effective public awareness program will be essential. Advance posting of the proposed closures will allow for the initial readjustment of routes.

The work should also be staged to limit construction to uneffected bridges. It could be disastrous to limit traffic on all the routes at one time. Traffic patterns would not be able to adjust to such constraints.

Soils Investigation

Two soil borings were taken by ATL Testing Laboratories. The test results and recommendations at each bridge site are shown in the report in the Appendix. Preliminary design calculations were prepared by ATL (June 14, 1985) for allowable bearing values for spread footings and drilled piers. To provide for the possible use of steel pilings at the abutments, ATL's report of July 7, 1985 included recommendations indicating that steel piles would require preboring 2' holes for pipe piles. The use of spread footings was not considered feasible for bridges #2 & #3. Subsequent discussion with ATL personnel indicated that this recommendation applied to footings up to 20' below the surface. For spread footings located at 30' below the ground's surface, the allowable footing bearing pressure shown in the preliminary design calculations was utilitzed. Addendum No. 1 (July 11, 1985) included supplemental recommendations for allowable spread footing bearing capacities for bridges No. 6 through 11.

The lateral earth bearing pressures to be designed for on the proposed substructure system were obtained by phone from ATL.

A summary of the soil design allowables is as follows:

Allowable bearing pressure under spread footings	- 3 TSF to 10 TSF
Allowable end bearing pressure for drilled piers	- 9 TSF to 30 TSF
Allowable end bearing load for steel pilings	- 20 Tons
Equivalent fluid pressure for soil lateral loads to walls (at rest condition)	- 65 - 70 pcf
Soil modules of subgrade reaction	- 630 KSF to 930 KSF
Soil weight	- 115 pcf.

Estimated Construction Costs

Estimated construction costs were developed by applying unit costs to the estimated quantities for the bridge element. The individual bridge elements were defined according to ADOT procedures. Applicable unit prices were derived based on unit prices for recent ADOT projects and information obtained from local contractors.

The estimated cost for each bridge includes substructure and superstructure construction. These costs do not include the costs of:

A. Engineering
B. Utility relocations
C. Traffic control/detours
D. The concrete channel wall attached to the drilled piers

Summary of Bridge costs based on 1985 prices:

Number	Description	Est. Cons't Cost
1.	7th Avenue	$409,000
2.	Dunlap Avenue	529,000
3.	Central Avenue	474,000
4.	7th Street	242,000
5.	Northern Avenue	231,000
6.	12th Street	168,000
7.	16th Street	578,000
8.	Glendale Avenue	294,000
11.	32nd Avenue	279,000

7TH AVENUE BRIDGE OVER ACDC

Description

7th Avenue intersects the proposed ACDC alignment at a skew angle of 22°. The improved roadway width at 7th Avenue is to be 64'-0" gutter-line to gutter-line. The channel width at this location is 60'-0", giving a bridge length along the roadway of 72'-0", backface of abutment to backface of abutment. The highwater depth is 20.8 feet measured at the channel walls and the vertical clearance from high water to the existing roadway is 3.4 feet. Existing utilities at the bridge location include gas, water & sewer lines.

Recommendation

The superstructure recommended for this location is a single span precast, prestressed box girder with an asphalt overlay. The superstructure depth, including asphalt, is 2'-5" and will require a minimal, if any, grade change at the roadway. The bridge will be 77'-8" wide, 72'-0" long, and will have a 15'-0" approach slab at each end. Water and gas lines can be carried inside the box girders; the sewer lines may run under the channel at, or adjacent to, the bridge structure. The estimated construction cost of this bridge is $409,000.

DUNLAP AVENUE BRIDGE OVER ACDC

Description

Dunlap Avenue intersects the proposed ACDC alignment at a skew of 55°. Channel width at this location is 60 feet and includes a pier at the channel centerline. The water depth at design highwater is 22.0 feet and the vertical clearance from highwater to the existing roadway is 2.6 feet. The roadway width is 64'-0", and the proposed bridge dimensions are 77'-8" edge to edge of the deck and 118'-9" backface-to-backface of the abutments measured along the roadway. Existing utilities at this location include telephone, water, and sewer lines.

Recommendation

The superstructure recommended for this location is a two span, continuous, cast-in-place, post-tensioned slab. The slab has a depth of 1'-6" and does not require a grade raise at the roadway. Bridge length and width are as noted above; there will be a 15'-0" approach slab at each end of the bridge. The telephone and water lines can be carried within the superstructure; sewer lines may be run under the channel at the bridge location. The estimated construction cost of the bridge is $529,000.

CENTRAL AVENUE BRIDGE OVER ACDC

Description

The proposed ACDC alignment is on a curve at the intersection with Central Avenue. The channel width is 60'-0", including a pier wall at the channel centerline, and the highwater depth is 22.0 feet measured at the walls. Due to the curved channel alignment, the bridge skew varies from approximately 45° to 50° and the bridge length from 93'-0" to 107'-0", from backface-to-backface of the abutments. The roadway width varies due to the location of a bus turnout on the structure. The proposed structure width is constant except at the north abutment, where it has been increased to accommodate a sidewalk along Ruth Avenue, which intersects Central Avenue at that point. The minimum vertical clearance from highwater to the existing roadway is 1.90 feet. Existing utilities at the bridge location include gas, telephone, water, and sewer lines.

Recommendation

The recommended superstructure at this location is a two span, continuous, cast-in-place, post-tensioned slab. The superstructure depth is 1'-3"; a grade raise of 0.30 feet is required. The deck width is 95'-0", except at the north abutment, where it has been increased to 104'-0". The bridge's length and skew are as described above. There will be a 15'-0" approach slab at each end of the bridge. Water, gas, and telephone lines can be incorporated into the superstructure; sewer lines can run under the channel adjacent to or at the bridge. The estimated construction cost of the bridge is $474,000.

Description

7th Street intersects the proposed ACDC alignment at a skew of 24.5^{o}. The improved roadway width of 7th Street is to be 60'-0" gutter-line to gutter-line. The channel width at this location is 50'-0" producing a bridge length along the roadway of 61'-7" measured back face of abutment to back face of abutment. The water depth measured at the channel walls is 20.4 feet, and the vertical clearance from highwater to the existing roadway surface is 3.2 feet. Existing utilities at the bridge location include gas, water and sewer lines.

Recommendation

The superstructure recommended for this location is a single-span cast-in-place post-tensioned concrete voided slab. Total slab depth is 2'-0" and will require no grade change in the roadway profile. The bridge will be 73'-8" wide and 61'-7" long and will include a 15'-0" approach slab at each abutment. The gas line can be carried inside a void in the slab. The water line is too large to be placed inside the slab and will be attached to the side of the bridge. The sewer lines may be run under the channel at, or adjacent to, the bridge structure. The estimated construction cost of this bridge is $242,000.

NORTHERN AVENUE BRIDGE OVER ACDC

Description

Northern Avenue intersects the proposed ACDC alignment at a skew of 6°. The improved roadway width of Northern Avenue is to be 64'-0" gutter-line to gutter-line. The channel width at this location is 50'-0", giving a bridge length along the roadway of 57'-10" measured back face of abutment to back face of abutment. The water depth measured at the channel walls is 21.5 feet, and the vertical clearance from highwater to the existing roadway surface is 4.1 feet. Existing utilities at the bridge locatio include gas, sewer and telephone lines.

Recommendation

The superstructure recommended for this location is a single-span cast-in-place post-tensioned concrete voided slab. Total slab depth is 2'-0" and will require no grade change in the roadway profile. The bridge will be 77'-8" wide amd 57'-10" long and will include a 15'-0" approach slab at each abutment. The gas and telephone lines can be carried within the slab or the sidewalk. The sewer line may br run under the channel at, or adjacent to, the bridge structure. The estimated construction cost of this bridge is $231,000.

12TH STREET BRIDGE OVER ACDC

Description

12th Street intersects the proposed ACDC alignment at a skew of 27.6°. The improved roadway width of 12th Street is to be 38'-0" gutter-line to gutter-line. The channel width at this location is to be 40'-0", giving a bridge length along the roadway of 53'-8" measured back face of abutment to back face of abutment. The water depth measured at the channel walls is 21.5 feet, and the vertical clearance from highwater to the existing roadway surface is 4.0 feet. Existing utilities at the bridge location include water and cable TV lines.

Recommendation

the superstructure recommended for this location is a single-span cast-in-place post-tensioned concrete voided slab. Total slab depth is 2'-0" and will require no grade change in the roadway profile. The bridge will be 51'-8" wide and 53'-8" long and will include a 15'-0" approach slab at each abutment. The water and cable TV lines can be carried either within the slab voids or the sidewalk. The estimated construction cost of this bridge is $168,000.

16TH STREET BRIDGE OVER ACDC

Description

16th Street intersects the proposed ACDC alignment at a skew of 63.4°. The improved roadway width of 16th Street is to be 62'-0" gutter-line to gutter-line. The channel width at this location is to be 40'-0", giving a bridge length along the roadway of 106'-0" measured backface of abutment to backface of abutment. The water depth measured at the channel walls is 21.9 feet, and the vertical clearance from highwater to the existing roadway surface is 4.0 feet. Existing utilities at the bridge location include gas, water and sewer lines.

Recommendation

The superstructure recommended for this location is a two-span precaset, prestressed concrete I-girder made continuous for live load with a cast-in-place concrete deck. Total superstructure depth is 3'-10" and will require no grade change in the roadway profile. The bridge will be 75'-8" wide and 106'-0" long and will include a 15'-0" approach slab at each abutment. The gas and water lines may be within the slab voids. The sewer line may be run under the channel at, or adjacent to, the bridge structure. The estimated construction cost of this bridge is $578,000.

GLENDALE AVENUE BRIDGE OVER ACDC

Description

The intersection of Glendale Avenue and the ACDC alignment meets at a skew angle of 34°. At this site, Glendale Avenue is 64'-0" wide between gutter flowlines. The width of the proposed channel is 40'-0" with vertical walls 24'-0" high. The vertical clearance between the roadway surface and the design highwater elevation is 4.25 feet. Using a freeboard of 1.0 feet, the space available for the structure is 3.3 feet. Existing utilities at this location include water and sewer lines.

Recommendation

The recommended superstructure at this site is precast, prestressed concrete box girders. This bridge will be 77'-8" wide, 58'-0" long, 2'-6" deep, and have approach slabs 15'-0"' long. Two inches of hot bituminous pavement will be placed on top of the box girder units and the approach slab. The 6" water line can be carried through the deck in a sleeve, and the sewer line may be run under proposed channel at the bridge location. The estimated construction cost for this bridge is $294,000.

32ND STREET BRIDGE OVER ACDC

Description

The intersection of 32nd Street and ACDC meets at a skew angle of 26°. At this site, 32nd Street has curb and gutter on the west side. On the east side of the street there is an intersection with Stanford Drive. The proposed street width across this bridge would be 73'-0" between gutter flow lines. The proposed width of the channel is 36'-0" with vertical walls 22'-0" high. The vertical clearance between the roadway surface and the design highwater elevation is 2.1 feet. Using a freeboard of 1 foot, the space available is only 1.1 feet which is not adequate. In order to accommodate the proposed 2.0 foot depth of the superstructure, the roadway must be raised 0.9'.

Existing underground utilities that will be affected by the bridge's construction include water, gas, and sewer lines.

The other underground that must be relocated in order to clear the area within the bridge construction is a telephone conduit. At present, it is not known whether Stanford Drive will remain open following construction of the bridge. If this roadway is to continue being used, the bridge can be designed to accommodate this.

Recommended Structure

The recommended bridge superstructure at this site is a cast-in-place deck slab. This bridge will be 86'-8" wide, 48'-10" long, 2'-0" deep and have approach slabs 15'-0" long. In order to match the elevation of the top of the bridge deck, the profile of the adjacent roadway must be raised 0.9 feet. The 12" water line and 2" gas line can be carried through the deck in sleeves, and the sewer line may be run under proposed channel at the bridge location. The estimated construction cost for this bridge is $279,000.

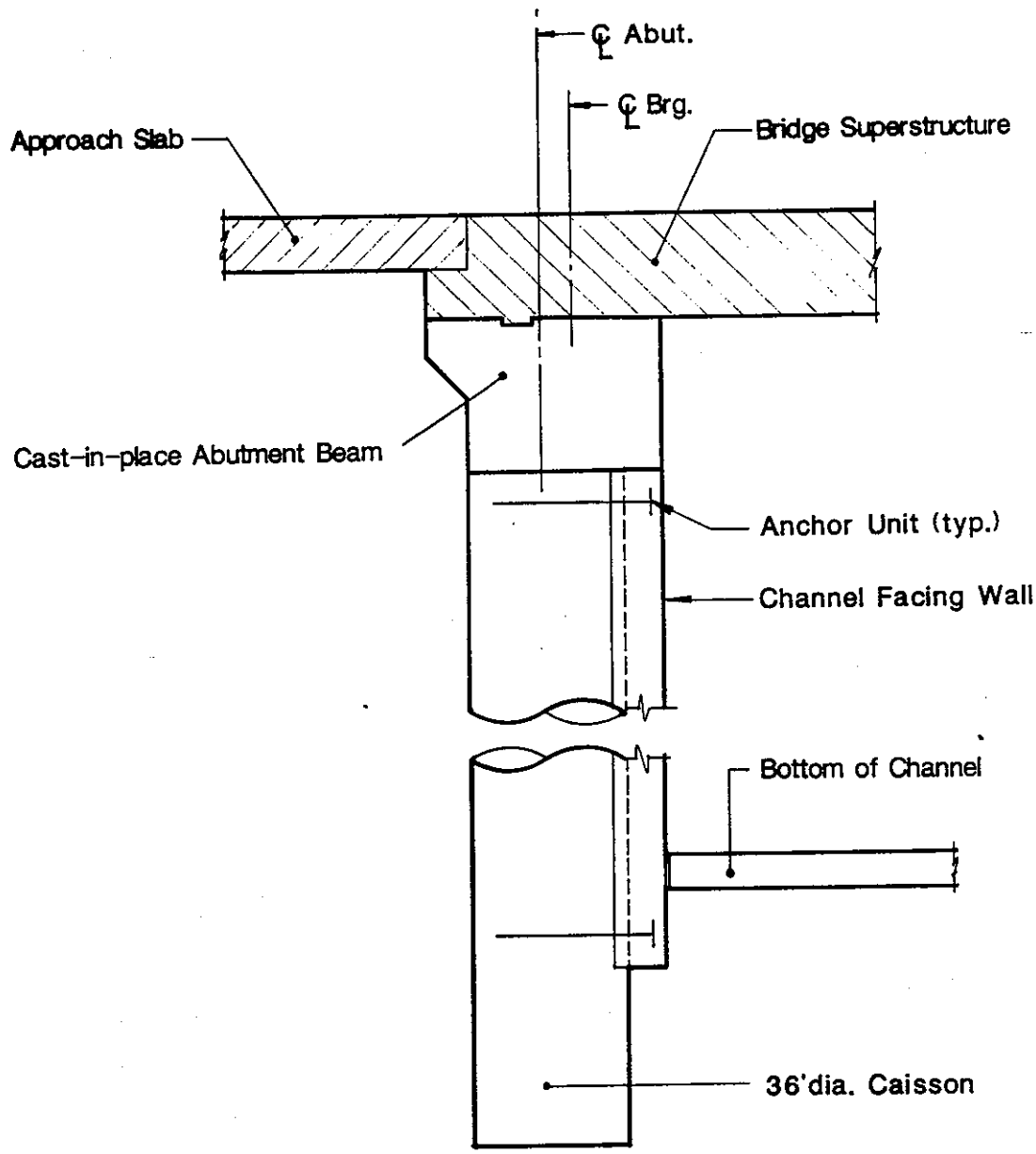

Section/Typical Abut.

FIGURE 1

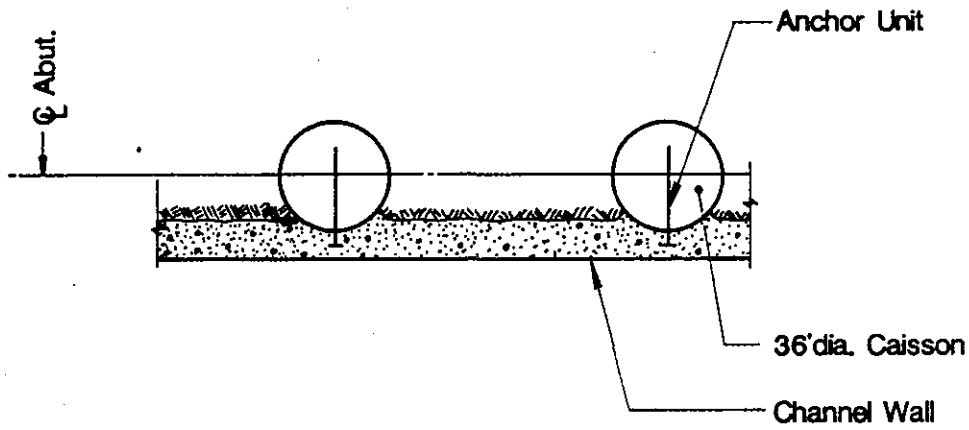

Plan/Typical Abut.

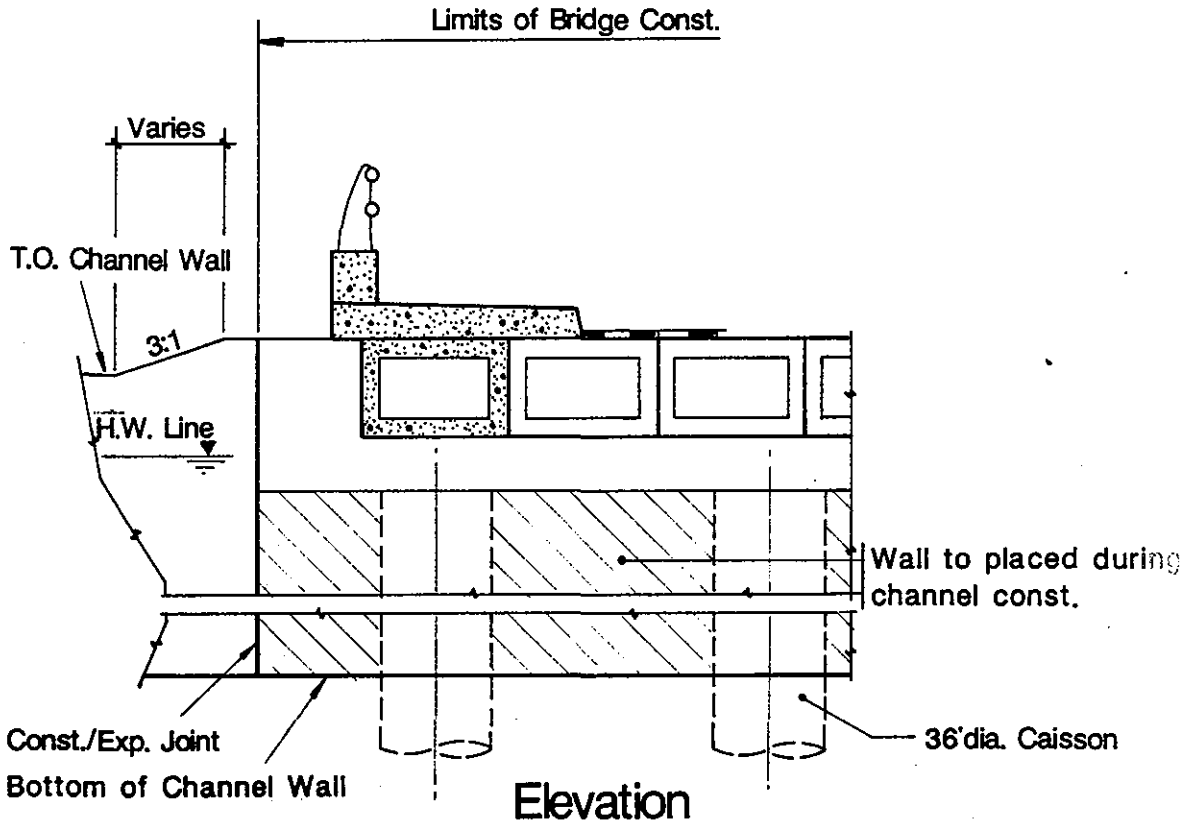

Elevation

FIGURE 2

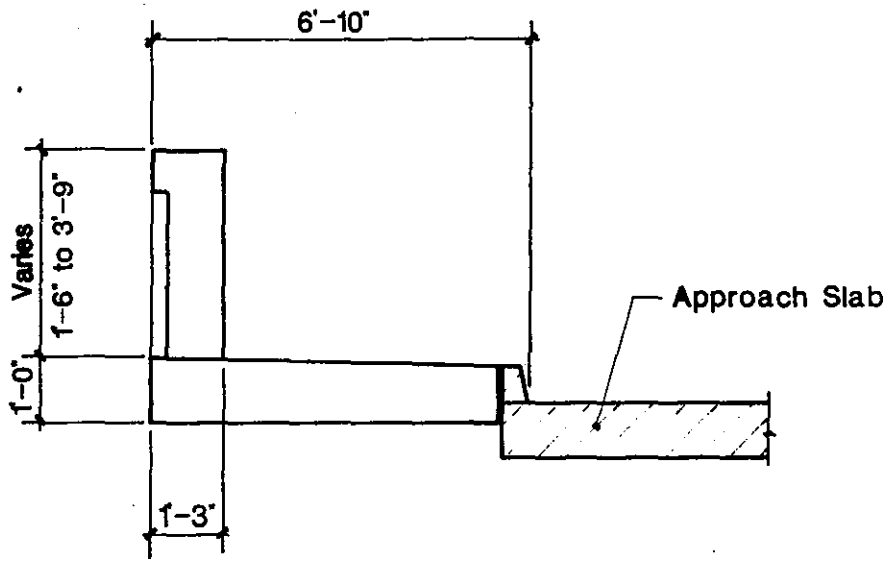

Section/Typical Approach Slab

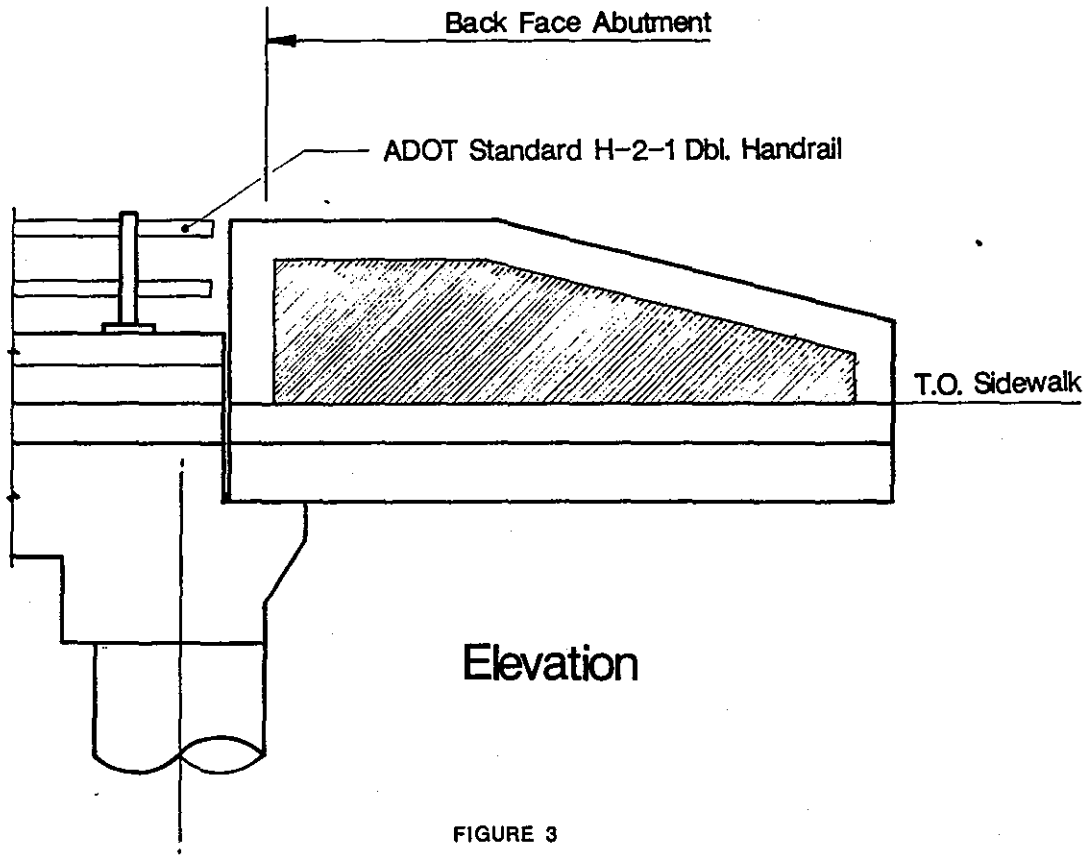

Elevation

FIGURE 3

APPENDIX

FOUNDATION SOIL INVESTIGATION REPORTS:

Preliminary Design Calculations, June 14, 1985

Report dated July 7, 1985

Addendum dated July 11, 1985

TS & L'S

7th AVenue

Dunlap Avenue

Central Avenue

17th Street

Northern Avenue

12th Street

16th Street

Glendale Avenue

32nd Street