ENGINEERING DIVISION
LIBRARY

910.005

Property of
Flood Control District of MC Library
Please Return to
2801 W. Durango
Phoenix, AZ 85009

FLOOD CONTROL DISTRICT
RECEIVED
FEB 21 '85

	CH ENG		HYDRO
	ASST		LMgt
	ADMIN		SUSP
	C & O		FILE
	ENGR		DESTROY
	FINANCE		
REMARKS			

Sverdrup | Sverdrup & Parcel

STRUCTURE CALCULATIONS
FOR
ARIZONA CANAL DIVERSION CHANNEL BRIDGE
AT 25th AVENUE
PHOENIX, ARIZONA

By

SVERDRUP & PARCEL AND ASSOCIATES, INC.
1650 W. Alameda Drive Suite 1100
Tempe, Arizona 85282
(602) 968-9048

S&P JOB NO. 9101

Registered Professional Engineer (Civil)
CERTIFICATE NO.
13769
JOHN F.
FISCHER
Date Signed 2-18-85
ARIZONA, U.S.A.

FLOOD CONTROL DISTRICT OF MARICOPA COUNTY
CONTRACT NO. FCD 84-12

SVERDRUP & PARCEL

JOB 9101 Flood Control District

COMPUTATIONS FOR 25TH Ave Bridge @ ACDC

SHEET NO. 0.1 OF

DATE 12/84

BY CJB CHKD JFF

TABLE OF CONTENTS

Subject	Page
Typical Section	1
Girder Design	2
Slab Design	44
Traffic/Bicycle Rail Design	47
Girder Bearing Design	51
Screed Elevations	53
Abutment Design	54
Detour Bridge	83

SVERDRUP & PARCEL

JOB 4101 Flood Control District

COMPUTATIONS FOR 25TH Ave Bridge @ ALDC

SHEET NO. 1 OF

DATE 10/84

BY CWB CHKD JFF

Typical Section

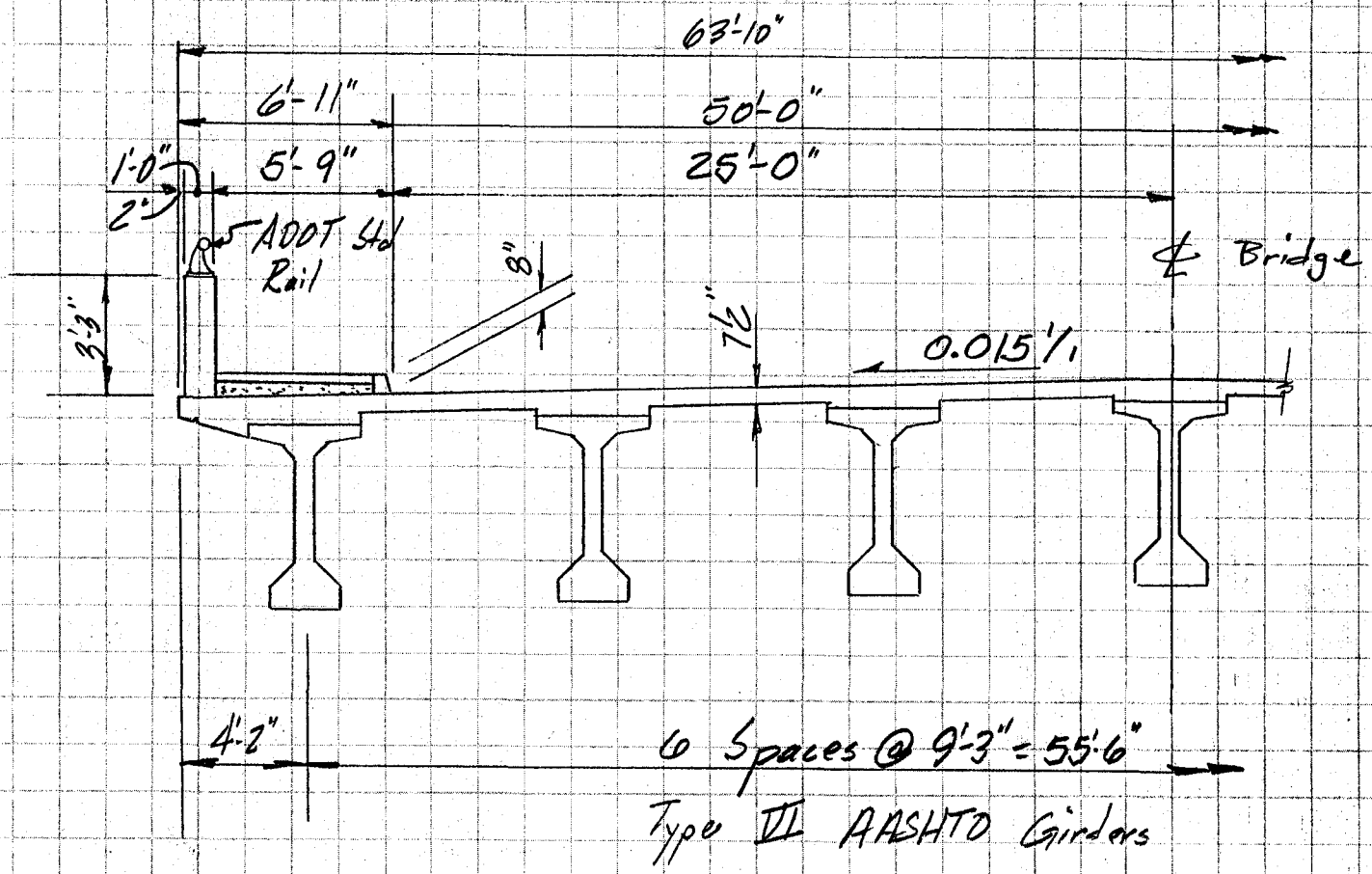

TYPICAL SECTION

SVERDRUP & PARCEL

JOB 9101 Flood Control District

COMPUTATIONS FOR 25th Ave Bridge @ A.C.D.C.

SHEET NO. 2 OF

DATE 11/84

BY CJB CHKD JFF

Girder Design

Use S&P Program P7348 to aid in the design of the girders. See Abstract below:

ABSTRACT

TITLE: PRESTRESSED BRIDGE GIRDER DESIGN PROGRAM

PROGRAM NUMBER: P7348

This program performs a complete design and deflection analysis of a simple span, precast, pretensioned bridge girder with a composite deck slab. Input and output may be in English, metric, or SI units. Program can apply HS20-44 + Interstate, or Indonesian Bina Marga live loads. Other live loads and live loads for continuous spans can also be handled by reading in the moments and shears at tenth points for live load, sidewalk live load, superimposed dead load, creep shrinkage, and temperature. Strand arrangement can be selected by computer or specified by input. All design considerations are in conformance with AASHTO Specifications. In addition, the recommendations of the ACI-ASCE Joint Committee on Prestressed Concrete are followed except effective depth for shear has been taken as constant and equal to the effective depth at midspan.

INPUT:

Basic deck dimensions, girder type or dimensions, concrete properties, loading information and prestressing properties. LL, SWLL SDL, C, S, and T moments and shears for girders which are continuous for live load.

OUTPUT:

Stresses for initial and final conditions, ultimate strength check, shear design, and deflections. All output is given at tenth points. The values of Fcir and Fcds are computed at midspan for checking losses.

LIMITATIONS:

6 AASHTO girders Types I thru VI, 4 metric girders Types I thru IV. Only 1/2, 7/16, and 3/8 inch strands with ultimate strength of 250 k/in**2 or 270 k/in**2 may be used. Where possible the program will select 1/2 inch strands. Prestress losses must be checked.

SVERDRUP & PARCEL

JOB 9101 Flood Control District

COMPUTATIONS FOR 25th Ave Bridge @ A.C.D.C.

SHEET NO. 3 OF

DATE 11/84

BY CJB CHKD JFF

Girder Design

46 Strand Pattern

½ ϕ strand on 2" grid E.W.

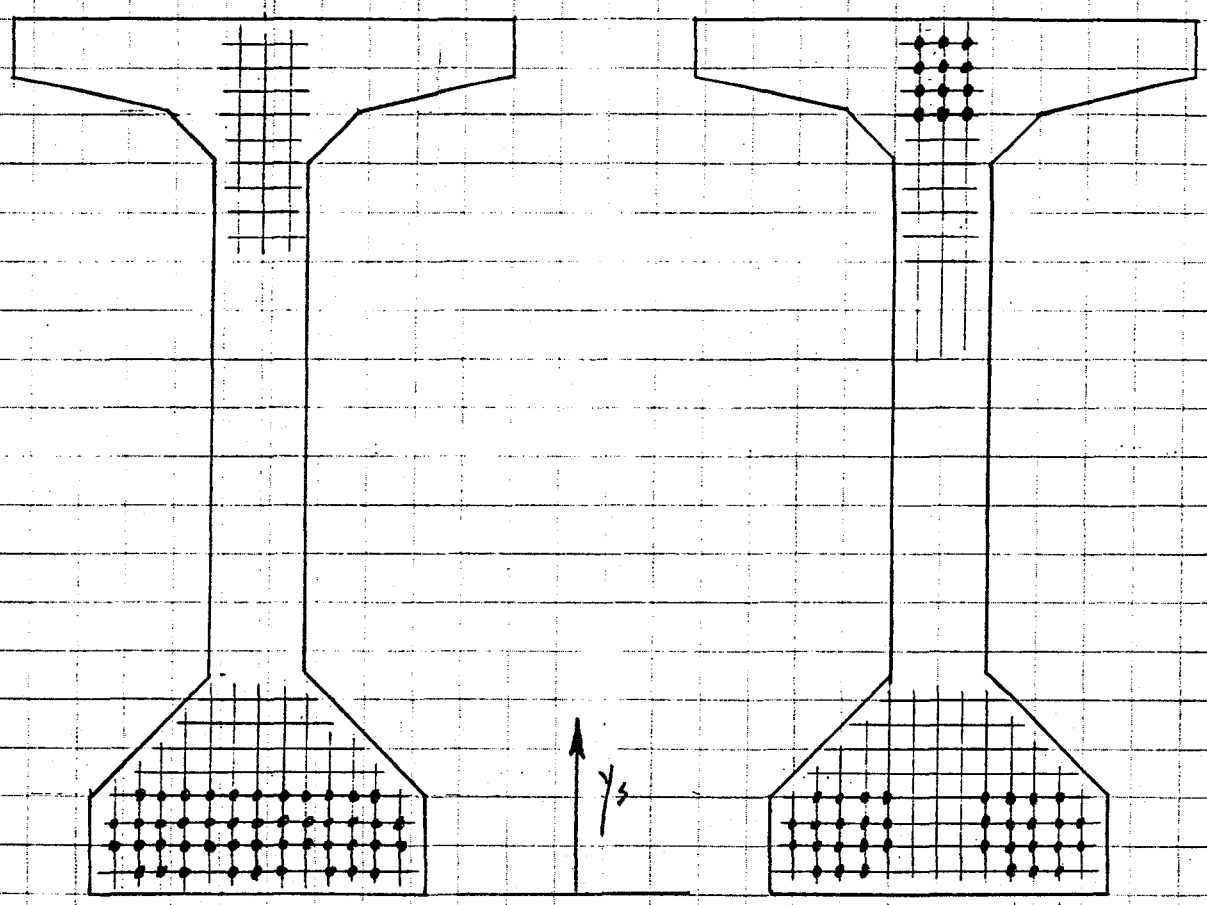

Section @ Center Span

$y_s = (2\times9 + 4\times13 + 6\times13 + 8\times11) \div 46$
$= 5.13"$

Section @ End Span

$y_s = (2\times6 + 4\times10 + 6\times10 + 8\times8 + 3\times70 + 3\times68 + 3\times66 + 3\times64) \div 46$
$y_s = 21.30"$

SVERDRUP & PARCEL

JOB 9101 Flood Control District

COMPUTATIONS FOR 25TH Ave Bridge @ A.C.D.C.

SHEET NO. 4 OF

DATE 11/84

BY CJB CHKD JFF

Girder Design

Estimate of Prestress Losses

AASHTO prestress loss provisions are based on stress relieved strand and are not directly applicable to stress relieved, low relaxation strand. Therefore, use the procedure specified in "Recommendations for Estimating Prestress Losses" published by PCI 1975.

Step	Begin Time	End Time
1	t=1hr, tension strand	t=24 hours, release strand & end steam cure
2	t=24 hours	t=696 hours (29 days) Just after casting slab
3	t=696 hours	t=8760 hours Age = 1 yr
4	t=8760 hours (1 year)	t= 18,250×24 (50 years)

SVERDRUP & PARCEL

JOB 9101 Flood Control District

COMPUTATIONS FOR 25TH Ave Bridge @ A.C.D.C.

SHEET NO. 5 OF

DATE 11/84

BY CJB CHKD JFF

Girder Design

Estmate of Prestress Losses

$A_{girder} = 1085 \text{ in}^2$, $e_{cgs} = 36.38" - 5.13" = 31.25"$ (@ ℄ girder)

$I_{girder} = 733{,}320$, # strands = 46 - ½ ϕ

$f'_c = 5000$ psi , $E_c = 33 \times 150^{3/2} \sqrt{5000} = 4290$ ksi

$f'_{ci} = 4000$ psi , $E_{ci} = 33 \times 150^{3/2} \sqrt{4000} = 3830$ ksi

Volume/Surface for type VI girder = 4.4" { SCF = .72 creep factor (Table 3); SSF = .72 shrinkage factor (Table 6) }

$I_{composite} = 1{,}454{,}500 \text{ in}^4$, $e_{cgs} = 52.24" - 5.13" = 47.11"$

Ultimate Creep Loss (UCR , Eq #8)

$UCR = 63 - 20E_c/10^6 \geq 11$

$= 63 - \frac{20 \times 4.29 \times 10^6}{10^6} = -22.8$ ∴ use $UCR = 11$ psi/psi

Ultimate Shrinkage Loss (USH , Eq #13)

$USH = 27{,}000 - 3000 \frac{E_c}{10^6} = 27{,}000 - 3000 \times 4.29 = 14{,}130$ psi

Initial strand stress = .75 × 270 = 202.5 say 202 ksi

Ultimate strand strength = 270 ksi

SVERDRUP & PARCEL

JOB 9101 Flood Control District

COMPUTATIONS FOR 25TH Ave Bridge @ A.C.D.C.

SHEET NO. 6 OF

DATE 11/84

BY CDB CHKD JFF

Girder Design

Estimate of Prestress Losses

Step 1

Relaxation (RET)

$$RET = f_{st}\left[(\log t - \log t_1)/45\right] \times \left(\frac{f_{st}}{.9 \times f_{pu}} - .55\right)$$

$f_{st} = 202$ ksi

$t = 24$ hours, $t_1 = 1$ hours

$$= 202\left[(\log 24 - \log 1)/45\right] \times \left(\frac{202}{.9 \times 270} - .55\right) = 1.74 \text{ psi}$$

Elastic Shortening (ES)

Try $P_o = .68 \times 270 \times .153 \times 46 = 1292$ k

Girder Dead Load Moment @ midspan = 1772 k-ft

$$f_{cr} = -\frac{1292}{1085} - \frac{1292 \times 31.25^2}{733{,}320} + \frac{1772 \times 12 \times 31.25}{733{,}320} = -2.01 \text{ ksi}$$

$$ES = f_{cr} \, E_s / E_{ci} = 2.01 \times \frac{28}{3.83} = 14.69 \text{ ksi}$$

Check factor $= \frac{202 - 1.74 - 14.69}{270} = .69$ close enough

Prestress Loss at end Step 1

CR =	0
SH =	0
RET =	1.74 ksi
ES =	14.69 ksi
Σ	16.43 ksi

SVERDRUP & PARCEL

JOB 9101 Flood Control District

COMPUTATIONS FOR 25th Ave Bridge @ A.C.D.C.

SHEET NO. 7 OF

DATE 11/84

BY CJB CHKD JFF

Girder Design

Estimate of Prestress Losses

Step 2

Creep (CR)

$t_1 = 0$ days after transfer
$t = 28$ days after "

$PCR = AUC_t - AUC_{t_1} = 0.34$ (table 5)

$f_s @ t_1 = 202 - 16.43$ (loss step 1) $= 185.57$

$P_{@t_1} = 185.57 \times .153 \times 46 = 130.6$

$f_c = -2.01$ ksi

$CR = UCR \times SCF \times PCR \times f_c$ (Eq 6)

$= 11 \times .72 \times .34 \times 2.01 = 5.41$ ksi

Shrinkage (SH)

$t_1 = 0$ days after transfer
$t = 28$ days after "

$PSH = AUS_t - AUS_{t_1} = .41$ (table 7)

$SH = USH \times SSF \times PSH$

$= 12{,}900 \times .72 \times .41 = 3.81$ ksi

SVERDRUP & PARCEL

JOB 9101 Flood Control District

COMPUTATIONS FOR 25th Ave Bridge @ ACDC

SHEET NO. 8 OF

DATE 11/84

BY CJB CHKD JFF

Girder Design

Estimate of Prestress Losses

Step 2 (con't)

Relaxation

$t_1 = 1$ day

$t = 29$ days

$$RET = 185.57\left[(\log 29\times24 - \log 24)/45\right]\times\left(\frac{185.57}{.9\times270} - .55\right) = 1.29$$

Prestress losses @ end of Step 2

CR	=	5.41 ksi
SH	=	3.81
RET	=	1.29
Σ		10.51 ksi
Loss Step 1		16.43
Total		26.94 ksi

SVERDRUP & PARCEL

JOB 9101 Flood Control District

COMPUTATIONS FOR 25TH Ave Bridge @ A.C.D.C.

SHEET NO. 9 OF

DATE 11/84

BY CJB CHKD JFF

Girder Design

Estimate of Prestress Losses

Step 3

Creep (CR)

$t_1 = 28$ days, $t = 365$ days } PCR = .74 − .34 = .40 (table 5)

Additional Moment due to slab & diaphragm = 1531 + 154 = 1685 k-ft

" " " Superimposed dead load = 862 k-ft

$$\Delta f_c = \frac{1685 \times 12 \times 31.25}{733{,}320} + \frac{862 \times 12 \times 47.11}{1{,}454{,}500} = 1.20 \text{ ksi}$$

$$\Delta f_s = 1.20 \times \frac{28}{4.29} = 7.83 \text{ ksi}$$

$$f_{s@t_1} = 202 - 26.94 + 7.83 = 182.89 \text{ ksi}$$

$$P_{@t_1} = 182.89 \times .153 \times 46 = 1287 \text{ k}$$

$$f_{c@t_1} = -\frac{1287}{1085} - \frac{1287 \times 31.25^2}{733{,}320} + \frac{1772 \times 12 \times 31.25}{733{,}320} + 1.20 = -.79 \text{ ksi}$$

$$CR = 11 \times .72 \times .40 \times .79 = 2.50 \text{ ksi}$$

Shrinkage (SH)

$t_1 = 28$ days, $t = 365$ days } PSH = 0.86 − .41 = 0.45 (table 7)

$$SH = 12{,}900 \times .72 \times .45 = 4.18 \text{ ksi}$$

SVERDRUP & PARCEL

JOB 9101 Flood Control District

COMPUTATIONS FOR 25TH Ave Bridge @ A.C.D.C.

SHEET NO. 10 OF

DATE 11/84

BY CJB CHKD JFF

Girder Design

Estimate of Prestress Losses

Step 3 (cont)

Relaxation (RET)

$t_1 = 29$ days

$t = 366$ days

$$RET = 182.89\left[(\log 366\times24 - \log 29\times24)/45\right]\times\left(\frac{182.89}{.9\times270} - .55\right) = .91 \text{ ksi}$$

Prestress Loss at end of Step 3

CR =	2.50 ksi
SH =	4.18
RET =	.91
Σ	7.59 ksi
Loss Step 1	16.43
Loss Step 2	10.51
Total	34.53 ksi

SVERDRUP & PARCEL

JOB 9101 Flood Control District

COMPUTATIONS FOR 25TH Ave Bridge @ A.C.D.C.

SHEET NO. 11 OF

DATE 11/84

BY CUB CHKD JFF

Girder Design

Estimate of Prestress Losses

Step 4

Creep (CR)

$t_1 = 365$ day, $t_2 = 18{,}250$ days } PCR = 1.0 − .74 = 0.26 (table 5)

$f_{s@t_1} = 202 - 34.53 = 167.47$ ksi, $P_{@t_1} = 167.47 \times .153 \times 46 = 1179$ K

$$f_{c@t_1} = -\frac{1179}{1085} - \frac{1179 \times 31.25^2}{733{,}320} + \frac{1772 \times 12 \times 31.25}{733{,}320} + 1.20 = -.55 \text{ ksi}$$

CR = 11 × .72 × .26 × .55 = 1.13 ksi

Shrinkage, (SH)

$t_1 = 365$ days, $t = 18{,}250$ days } PSH = 1 − 0.86 = 0.14 (table 7)

SH = 12,900 × .72 × .14 = 1.30 ksi

Relaxation (RET)

$t_1 = 366$ days

$t = 18{,}251$ days

$$RET = 167.47\left[\left(\log 18{,}251 \times 24 - \log 366 \times 24\right)/45\right] \times \left(\frac{167.47}{.9 \times 270} - .55\right) = .88 \text{ ksi}$$

SVERDRUP & PARCEL

JOB 9101 Flood Control District

COMPUTATIONS FOR 25TH Ave Bridge @ A.C.D.C.

SHEET NO. 12 OF

DATE 11/84

BY CJB CHKD JFF

Girder Design

Estimate of Prestress Loss

Step 4 (Continued)

Loss at end of Step 4

CR =	1.13	ksi
SH =	1.30	
RET =	.88	
Σ	3.31	ksi
Loss Step 1	16.43	ksi
Loss Step 2	10.51	ksi
Loss Step 3	7.54	ksi
Total =	37.8	ksi

say Loss = 38 ksi

vs. assumed 41 ksi

used in P7348 run.

say close enough

P734 PRESTRESSED BRIDGE GIRDER DESIGN-ENGLISH UNITS

SVERDRUP AND PARCEL

JOB NO.	9101 25TH AVE BRIDGE OVER ARIZONA CANAL DIV. CHAN. PROGRAM P7348
PROBLEM	GIRDER DESIGN BY CJB CHKD JFF

CODE(1) CODE(2) CODE(3)

CODE(1)	CODE(2)	CODE(3)
1.	1.	1.

CODE(1) = 1.0 ENGLISH UNITS
= 2.0 METRIC UNITS
= 3.0 SI UNITS

CODE(2) = 1.0 AASHO LL
= 2.0 INDONESIAN BINA MARGA LL

CODE(3) = 1.0 AASHO GIRDERS
= 2.0 INDONESIAN METRIC GIRDERS
= 3.0 INPUT GIRDER DIMENSIONS BELOW

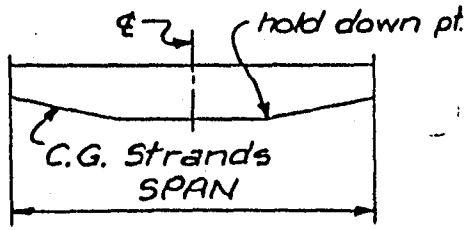

GENERAL DATA

DESIGN LL [10] 1

LL =1 -HS20-44
LL =2 -HS20-44 + INTERSTATE
LL =3 -LL+SDL MOMENTS TO BE READ IN ON FORM 2
LL =4 -INDONESIAN BINA MARGA LL

		GIRDER	DECK
UNIT WEIGHT OF CONCRETE	(KCF)	.15	.15
CONCRETE STRENGTH AT 28 DAYS	(KSI)	5.	3.
ALLOWABLE FINAL TENSION IN CONCRETE	(PSI)	424.	
STRAND STEEL ULTIMATE STRENGTH	(KSI)	270.	(250. OR 270. KSI ONLY)
INITIAL PRESTRESSING STEEL TENSION	(KSI)	202.	
ASSUMED TOTAL PRESTRESS LOSSES	(KSI)	41.	
SLAB STRUCTURAL THICKNESS	(IN)	7.	
MONOLITHIC WEARING SURFACE	(IN)	.5	
YIELD STRESS CONVENTIONAL REINFORCEMENT	(KSI)	40.	

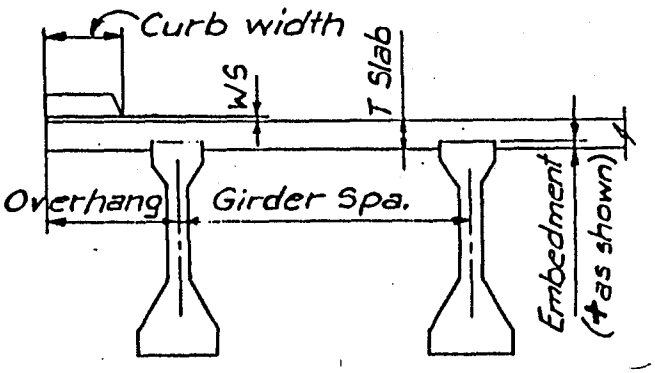

GIRDER DATA

GIRDER TYPE NO. [10] 6
(BLANK IF CODE(3)=3.0)

STRAND ARRANGEMENT [20] 1
0=BY COMPUTER
1=TO BE SPECIFIED ON FORM 3

SPAN LENGTH	(FT)	112.
GIRDER SPACING	(FT)	9.25
DECK OVERHANG	(FT)	0.

HOLD-DOWN PTS. (FT FROM ℄)		12.
WIDTH OF CURB	(FT)	0.
DECK EMBEDMENT	(IN)	-2.5

NOTE- OVERHANG AND CURB WIDTH = 0. FOR INTERIOR GIRDER

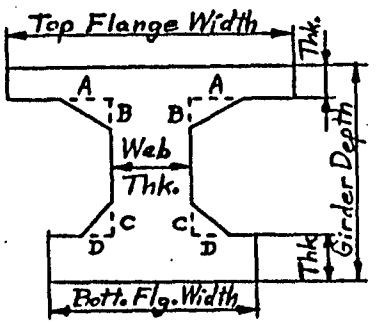

GIRDER SECTION PROPERTIES INPUT (THIS CARD REQUIRED ONLY IF CODE(3)=3.0)

(ALL DIMENSIONS IN INCHES)

GIRDER DEPTH	TOP FLANGE WIDTH	TOP FLANGE THICKNESS	BOTTOM FLANGE WIDTH	BOTTOM FLANGE THICKNESS	WEB THICKNESS	TOP FILLET A	TOP FILLET B	BOTTOM FILLET C	BOTTOM FILLET D

P7348 PRESTRESSED BRIDGE GIRDER DESIGN-ENGLISH UNITS

SVERDRUP AND PARCEL

FORM 3 OF 2

Form 2 not used

LOAD CARDS (3 TYPES PROVIDED FOR. NO LIMIT ON NUMBER ALLOWED.)

LOAD TYPE -1) CONCENTRATED DIAPHRAGM LOAD
2) SUPERIMPOSED UNIFORM DEAD LOAD (SDL)
3) UNIFORMLY DISTR. SIDEWALK LIVE LOAD
4) LAST CARD (ALWAYS REQUIRED)

X1 = DISTANCE FROM LEFT END OF SPAN TO CONCENTRATED LOAD.
DISTANCE FROM LEFT END OF SPAN TO BEGINNING UNIF. LOAD.

X2 = DISTANCE FROM LEFT END OF SPAN TO END UNIFORM LOAD.

TYPE (1)	W (K OR K/FT) (10–16)	X1 (FT) (17–24)	X2 (FT) (25–32)
1	5.5	56.	.
2	.55	0.	112.
	.	.	.
	.	.	.
	.	.	.
4			

See substructure design

PRESTRESSING DATA CARD (REQUIRED IF STRAND ARRANGEMENT TO BE SPECIFIED=1 IN COL.20 ON FORM 1. REQUIRED IF CODE(3)=3.0 ON FORM 1.)

NO. TRANDS (1–2)	SIZE* (5)	(7–8)	DIST. BOTT. GDR. TO C.G. STRANDS AT ℄ (IN) (9–16)	AT END (IN) (17–24)
46	1	2	5.13	21.3

TO BE LEFT JUSTIFIED

* STRAND SIZE 1/2", 7/16" AND 3/8" ONLY.

```
$ TY FCDG.DAT
JOB NO. 9101 25TH AVE BRIDGE OVER ARIZONA CANAL DIV. CHAN. PROGRAM P7348
PROBLEM GIRDER DESIGN                                    BY CJB  CHKD JFF
    1.          1.          1.
         1
     .15         .15
    5.          3.
  424.
  270.
  202.
   41.
    7.
     .5
   40.
         6           1
  112.        12.
    9.25       0.
    0.        -2.5
1           5.5    56.
2            .55    0.     112.
4
46  1 2   5.13    21.30
```

JOB NO. 9101 25TH AVE BRIDGE OVER ARIZONA CANAL DIV. CHAN. PROGRAM P7348

PROBLEM GIRDER DESIGN BY CJB CHKD JFF

```
CODE(1)= 1.0 - ENGLISH UNITS
CODE(2)= 1.0 - AASHTO LIVE LOAD SYSTEM
CODE(3)= 1.0 - STANDARD AASHTO GIRDER (ENGLISH UNITS)
*************************************************************************
PRESTRESSED GIRDER DESIGN
*************************************************************************
  GENERAL DATA                              GIRDER            DECK
     CONC. STRENGTH (KSI)                    5.00             3.00
     UNIT WEIGHT OF CONCR. (K/CFT)           0.150            0.150
     ALLOW FINAL TENSION (PSI)             424.00

     STRAND STEEL ULTIMATE STRENGTH (KSI)      270.00
     INITIAL PRESTRESSING STEEL TENSION (KSI) 202.00  (.75 x 270)
     ASSUMED TOTAL PRESTRESS LOSSES (KSI)       41.00

     SLAB STRUCTURAL THICKNESS  =  7.00 IN.
     MONOLITHIC WEARING SURFACE =  0.50 IN.

     CONVENTIONAL REINFORCEMENT FOR SHEAR AND TENSION
           YIELD STRESS (KSI) =  40.0

     DESIGN LL = 1 - HS20-44

     GIRDER DATA
        AASHTO-PCI  TYPE  6  GIRDER        HOLD-DOWN PTS.  12.00 FT FROM CL
        SPAN  LENGTH  =   112.00 FT        GIRDER   SPACING=    9.25 FT
        DECK OVERHANG =   0.0000 FT        WIDTH   OF  CURB   = 0.0000 FT
        DECK EMBEDMENT=  -2.50   IN

     COMPOSITE SECTION PROPERTIES
              AREA=  1768.19 IN**2              I= 1454481. IN**4
            WEIGHT=   2.1068 K/FT              YT=   -29.26 IN
             DEPTH=    81.50 IN              YB=    52.24 IN
        SLAB WIDTH=   111.00 IN           SM TOP=  -49713. IN**3
            SLAB Q=   17211. IN**3     SM BOTTOM=   27841. IN**3

     ADDITIONAL LOADS
        TYPE            MAGNITUDE        LOC. FROM LEFT END
        DIAPHRAGM        5.500 KIPS          56.000 FT
        SUPER. DL        0.550 KLF       0.000 FT TO 112.000 FT
```

JOB NO. 9101 25TH AVE BRIDGE OVER ARIZONA CANAL DIV. CHAN. PROGRAM P7348

PROBLEM GIRDER DESIGN BY CJB CHKD JFF

****
MOMENTS(FT.KIPS) AT TENTH POINTS
****

POINT	GIRDER DEAD LOAD	SLAB DEAD LOAD	DIAPHRAGM DEAD LOAD
0	0.0	0.0	0.0
1	638.0	551.3	30.8
2	1134.2	980.0	61.6
3	1488.6	1286.3	92.4
4	1701.3	1470.0	123.2
5	1772.2	1531.3	154.0
6	1701.3	1470.0	123.2
7	1488.6	1286.3	92.4
8	1134.2	980.0	61.6
9	638.0	551.3	30.8
10	0.0	0.0	0.0

POINT	LIVE LOAD	SIDEWALK LIVE LOAD	SUPERIMPOSED DEAD LOAD
0	0.0	0.0	0.0
1	670.6	0.0	310.5
2	1177.0	0.0	551.9
3	1519.2	0.0	724.4
4	1719.9	0.0	827.9
5	1767.8	0.0	862.4
6	1719.9	0.0	827.9
7	1519.2	0.0	724.4
8	1177.0	0.0	551.9
9	670.6	0.0	310.5
10	0.0	0.0	0.0

$$M_{Gdr\ DL.} = \frac{1085}{144} \times .15 \times \frac{112^2}{8} = 1772.2'^{K}$$

$$M_{Slab\ DL.} = \frac{7.5 \times 111 + 2.5 \times 42}{144} \times .15 \times \frac{112^2}{8} = 1531.3'^{K}$$

$$M_{Diaph\ DL} = \frac{5.5 \times 112}{4} = 154.0'^{K}$$

$$M_{SDL} = \frac{.55 \times 112^2}{8} = 862.4'^{K}$$

$$LL\ DF = S/5.5 = \frac{9.25}{5.5} = 1.682, \quad Impact = \frac{50}{L+125} = \frac{50}{112+125} = 0.211$$

LL Moment = 1736.0$^{K'}$ interpolating from AASHTO Appendix A, one lane w/o impact

$$M_{LL+I} = 1736.0 \times 1.211 \times \frac{1.682}{2} = 1767.8^{K'}$$

JOB NO. 9101 25TH AVE BRIDGE OVER ARIZONA CANAL DIV. CHAN. PROGRAM P7348

PROBLEM GIRDER DESIGN BY CJB CHKD JFF

****
SHEARS(KIPS) AT TENTH POINTS
****

POINT	GIRDER DEAD LOAD	SLAB DEAD LOAD	DIAPHRAGM DEAD LOAD
0	63.3	54.7	2.8
1	50.6	43.8	2.8
2	38.0	32.8	2.8
3	25.3	21.9	2.8
4	12.7	10.9	2.8
5	0.0	0.0	2.8
6	-12.7	-10.9	-2.8
7	-25.3	-21.9	-2.8
8	-38.0	-32.8	-2.8
9	-50.6	-43.8	-2.8
10	-63.3	-54.7	-2.8

POINT	LIVE LOAD	SIDEWALK LIVE LOAD	SUPERIMPOSED DEAD LOAD
0	67.2	0.0	30.8
1	60.4	0.0	24.6
2	53.5	0.0	18.5
3	46.5	0.0	12.3
4	39.4	0.0	6.2
5	-32.2	0.0	0.0
6	-39.4	0.0	-6.2
7	-46.5	0.0	-12.3
8	-53.5	0.0	-18.5
9	-60.4	0.0	-24.6
10	-67.2	0.0	-30.8

$$V_{Gdr\ D.L.} = \frac{1085}{144} \times .15 \times \frac{112}{2} = 63.2^k$$

$$V_{Slab\ D.L.} = \frac{7.5 \times 111 + 2.5 \times 42}{144} \times .15 \times \frac{112}{2} = 54.7^k$$

$$V_{Diaph\ D.L.} = \frac{5.5}{2} = 2.8^k$$

$$V_{SDL} = \frac{.55 \times 112}{2} = 30.8^k$$

LL Shear = 66.0 k interpolating in AASHTO Appendix A, one lane w/impact

$$V_{LL+I} = 66.0 \times \frac{1.682}{2} \times 1.211 = 67.2^k$$

JOB NO. 9101 25TH AVE BRIDGE OVER ARIZONA CANAL DIV. CHAN. PROGRAM P7348

PROBLEM GIRDER DESIGN BY CJB CHKD JFF

****

PRESTRESS DESIGN

****

** DESIGN BASED ON 46-1/2 IN.DIA.STRANDS ****
** YCL = 5.1300 IN YEND = 21.3000 IN ****
** INITIAL PRESTRESS FORCE = 1330.18 KIPS ****
** FINAL PRESTRESS FORCE = 1133.12 KIPS ****

** CONC. RELEASE STRENGTH REQD = 4.000 KSI ****
CONC. 28 day STRENGTH REQD = ~~5.000~~ KSI
5,500 ksi (see Exterior Girder Check)

TENTH POINT STRESSES IN PSI

	INITIAL CONDITION		FINAL CONDITION			
PT.	INTERFACE	BOT	TOP	INTERFACE		BOT
0	-251.6	-2221.1	0.0	0.0	-214.3	-1892.1
1	-357.5	-2112.9	-183.4	-123.9	-858.9	-974.3
2	-380.8	-2089.1	-323.3	-218.3	-1311.3	-314.3
3	-321.5	-2149.8	-419.5	-283.3	-1571.7	87.8
4	-198.5	-2275.4	-476.4	-321.7	-1660.0	258.4
5	-239.8	-2233.2	-491.8	-332.1	-1768.4	390.9 <424
6	-198.5	-2275.4	-476.4	-321.7	-1660.0	258.4
7	-321.5	-2149.8	-419.5	-283.3	-1571.7	87.8
8	-380.8	-2089.1	-323.3	-218.3	-1311.3	-314.3
9	-357.5	-2112.9	-183.4	-123.9	-858.9	-974.3
10	-251.6	-2221.1	0.0	0.0	-214.3	-1892.1

AT PT. 5 FCIR = -2091.2 FCDS = 1197.0 **

$$f_{ci} = \frac{2275.4}{.6} = 3792, \text{ use } 4000 \text{ psi}$$

JOB NO. 9101 25TH AVE BRIDGE OVER ARIZONA CANAL DIV. CHAN. PROGRAM P7348

PROBLEM GIRDER DESIGN BY CJB CHKD JFF

TENTH POINT ULTIMATE STRENGTH CHECK

PT.	APPLIED ULTIMATE MOMENT 1.3/PHI(D+5/3(L+I)) +1.3000(C+S) (FT-KIPS)	ULTIMATE MOMENT CAPACITY (FT-KIPS)
0	0.00	8800.92
1	3442.66	9450.85
2	6096.23	10100.99
3	7960.72	10751.32
4	9085.54	11355.33
5	9445.99	11355.33
6	9085.54	11355.33
7	7960.72	10751.32
8	6096.23	10100.99
9	3442.66	9450.85
10	0.00	8800.92

SHEAR DESIGN
** MIN. AREA OF STEEL = 0.24 SQ.IN./FT. ****
** MAX. STIRRUP SPACING = 24.00 IN. ****

PT.	ULT. VERT. SHEAR 1.3/PHI(D+5/3(L+I)) +1.3000(C+S) (KIPS)	AREA OFSTL. (SQ IN/FT)	EXCESS HORIZ. SHEAR (K/FT)
0	380.675	0.68	0.000
1	321.289	0.48	0.000
2	261.712	0.30	0.000
3	201.913	0.24	0.000
4	141.852	0.24	0.000
5	-73.537	0.24	0.000
6	-141.852	0.24	0.000
7	-201.913	0.24	0.000
8	-261.712	0.30	0.000
9	-321.289	0.48	0.000
10	-380.675	0.68	0.000

JOB NO. 9101 25TH AVE BRIDGE OVER ARIZONA CANAL DIV. CHAN. PROGRAM P7348

PROBLEM GIRDER DESIGN BY CJB CHKD JFF

TENTH POINT DEFLECTIONS (IN. DOWNWARD)

PT.	GDR DL	IN.PRE.	DECK	DIA.	SUPER DL	TOT DL	SID	LL
0	0.0000	0.0000	0.0000	0.0000	0.0000	0.0000	0.0	0
1	0.4467	-0.9935	0.3453	0.0262	0.0980	-0.0773	0.0	0
2	0.8452	-1.8230	0.6532	0.0503	0.1855	-0.0888	0.0	0
3	1.1572	-2.4532	0.8943	0.0701	0.2539	-0.0777	0.0	0
4	1.3553	-2.8491	1.0474	0.0835	0.2974	-0.0655	0.0	0
5	1.4231	-2.9826	1.0998	0.0885	0.3123	-0.0589	0.0	0
6	1.3553	-2.8491	1.0474	0.0835	0.2974	-0.0655	0.0	0
7	1.1572	-2.4532	0.8943	0.0701	0.2539	-0.0777	0.0	0
8	0.8452	-1.8230	0.6532	0.0503	0.1855	-0.0888	0.0	0
9	0.4467	-0.9935	0.3453	0.0262	0.0980	-0.0773	0.0	0
10	0.0000	0.0000	0.0000	0.0000	0.0000	0.0000	0.0	0

** MAX. LL DEFLECTION = 0.5719 IN. ****
** ALLOW. LL DEFLECTION = 1.6800 IN. ****

P734 PRESTRESSED BRIDGE GIRDER DESIGN-ENGLISH UNITS

SVERDRUP AND PARCEL

FORM 1 OF 2

1–80
JOB NO. 9101 25TH AVE BRIDGE OVER ARIZONA CANAL DIV. CHAN. PROGRAM P7348
PROBLEM GIRDER DESIGN - EXTERIOR CHECK BY OJB CHKD VFF

CODE(1) CODE(2) CODE(3)

1–30
1. 1. 1.

CODE(1) = 1.0 ENGLISH UNITS
= 2.0 METRIC UNITS
= 3.0 SI UNITS
CODE(2) = 1.0 AASHO LL
= 2.0 INDONESIAN BINA MARGA LL
CODE(3) = 1.0 AASHO GIRDERS
= 2.0 INDONESIAN METRIC GIRDERS
= 3.0 INPUT GIRDER DIMENSIONS BELOW

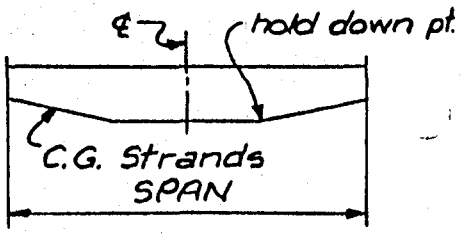

GENERAL DATA

DESIGN LL [10] 1

LL =1 -HS20-44
LL =2 -HS20-44 + INTERSTATE
LL =3 -LL+SDL MOMENTS TO BE READ IN ON FORM 2
LL =4 -INDONESIAN BINA MARGA LL

		GIRDER (1–10)	DECK (11–20)
UNIT WEIGHT OF CONCRETE	(KCF)	.15	.15
CONCRETE STRENGTH AT 28 DAYS	(KSI)	5.	3.
ALLOWABLE FINAL TENSION IN CONCRETE	(PSI)	424.	
STRAND STEEL ULTIMATE STRENGTH	(KSI)	270.	(250. OR 270. KSI ONLY)
INITIAL PRESTRESSING STEEL TENSION	(KSI)	202.	
ASSUMED TOTAL PRESTRESS LOSSES	(KSI)	41.	
SLAB STRUCTURAL THICKNESS	(IN)	7.	
MONOLITHIC WEARING SURFACE	(IN)	.5	
YIELD STRESS CONVENTIONAL REINFORCEMENT	(KSI)	40.	

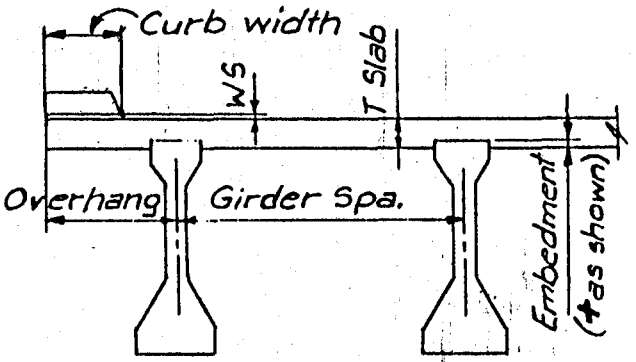

GIRDER DATA

GIRDER TYPE NO. [10] 6
(BLANK IF CODE(3)=3.0)

STRAND ARRANGEMENT [20] 1 0=BY COMPUTER 1=TO BE SPECIFIED ON FORM 3

		1–10
SPAN LENGTH	(FT)	112.
GIRDER SPACING	(FT)	9.25
DECK OVERHANG	(FT)	4.17

		11–20
HOLD-DOWN PTS. (FT FROM ℄)		12.
WIDTH OF CURB	(FT)	6.92
DECK EMBEDMENT	(IN)	-2.5

NOTE- OVERHANG AND CURB WIDTH = 0. FOR INTERIOR GIRDER

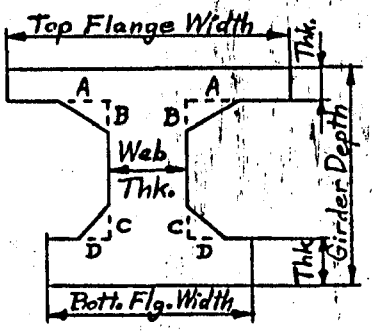

GIRDER SECTION PROPERTIES INPUT (THIS CARD REQUIRED ONLY IF CODE(3)=3.0)

(ALL DIMENSIONS IN INCHES)

GIRDER DEPTH (1–8)	TOP FLANGE WIDTH (9–16)	TOP FLANGE THICKNESS (17–24)	BOTTOM FLANGE WIDTH (25–32)	BOTTOM FLANGE THICKNESS (33–40)	WEB THICKNESS (41–48)	TOP FILLET A (49–56)	TOP FILLET B (57–64)	BOTTOM FILLET C (65–72)	BOTTOM FILLET D (73–80)
.	.	.	.	.	.	.	.	.	.

22

P7348 PRESTRESSED BRIDGE GIRDER DESIGN-ENGLISH UNITS

SVERDRUP AND PARCEL

FORM 3 OF 2

Form 2 not used

LOAD CARDS (3 TYPES PROVIDED FOR. NO LIMIT ON NUMBER ALLOWED.)

TYPE (1)	W(K OR K/FT) (10-16)	X1 (FT) (17-24)	X2 (FT) (25-32)
1	2.8	56.	.
2	.55	0.	112.
3	.322	0.	112.
	.	.	.
	.	.	.
4			

LOAD TYPE -1) CONCENTRATED DIAPHRAGM LOAD
2) SUPERIMPOSED UNIFORM DEAD LOAD (SDL)
3) UNIFORMLY DISTR. SIDEWALK LIVE LOAD
4) LAST CARD (ALWAYS REQUIRED)

X1 = DISTANCE FROM LEFT END OF SPAN TO CONCENTRATED LOAD.
DISTANCE FROM LEFT END OF SPAN TO BEGINNING UNIF. LOAD.

X2 = DISTANCE FROM LEFT END OF SPAN TO END UNIFORM LOAD.

Side walk Live Load $= \left(30 + \frac{3000}{span}\right) \times \left(\frac{55 - \text{sw width}}{50}\right)$ AASHTO 1.2.11

$= \left(30 + \frac{3000}{112}\right) \times \left(\frac{55 - 5.75}{50}\right)$

$= 55.93$ psf say 56 psf

or $.056 \times 5.75 = .322$ klf

PRESTRESSING DATA CARD (REQUIRED IF STRAND ARRANGEMENT TO BE SPECIFIED=1 IN COL.20 ON FORM 1. REQUIRED IF CODE(3)=3.0 ON FORM 1.)

NO. STRANDS (1-2)	SIZE* (5)	(7-8)	DIST. BOTT. GDR. TO C.G. STRANDS AT ℄ (IN) (9-16)	AT END (IN) (17-24)
46	1	2	5.13	21.3

TO BE LEFT JUSTIFIED

* STRAND SIZE 1/2", 7/16" AND 3/8" ONLY.

```
$ TY FCDGX.DAT
JOB NO. 9101 25TH AVE BRIDGE OVER ARIZONA CANAL DIV. CHAN. PROGRAM P7348
PROBLEM GIRDER DESIGN -EXTERIOR CHECK                    BY CJB  CHKD JFF
    1.          1.          1.
         1
     .15         .15
    5.          3.
  424.
  270.
  202.
   41.
    7.
     .5
   40.
         6          1
  112.        12.
    9.25       6.92
    4.17      -2.5
1           5.5    56.
2            .55    0.     112.
3            .322   0.     112.
4
46   1 2    5.13    21.30
```

should be 2.8k but say O.K. as is.

JOB NO. 9101 25TH AVE BRIDGE OVER ARIZONA CANAL DIV. CHAN. PROGRAM P7348

PROBLEM GIRDER DESIGN -EXTERIOR CHECK BY CJB CHKD JFF

```
CODE(1)= 1.0 - ENGLISH UNITS
CODE(2)= 1.0 - AASHTO LIVE LOAD SYSTEM
CODE(3)= 1.0 - STANDARD AASHTO GIRDER (ENGLISH UNITS)
*************************************************************************
PRESTRESSED GIRDER DESIGN
*************************************************************************
 GENERAL DATA                          GIRDER          DECK
    CONC. STRENGTH (KSI)                5.00            3.00
    UNIT WEIGHT OF CONCR. (K/CFT)       0.150           0.150
    ALLOW FINAL TENSION (PSI)         424.00 *

    STRAND STEEL ULTIMATE STRENGTH (KSI)      270.00
    INITIAL PRESTRESSING STEEL TENSION (KSI) 202.00   .75x270
    ASSUMED TOTAL PRESTRESS LOSSES (KSI)       41.00

    SLAB STRUCTURAL THICKNESS  =  7.00 IN.
    MONOLITHIC WEARING SURFACE =  0.50 IN.

    CONVENTIONAL REINFORCEMENT FOR SHEAR AND TENSION
          YIELD STRESS (KSI) =  40.0

    DESIGN LL = 1 - HS20-44

    GIRDER DATA
       AASHTO-PCI  TYPE  6  GIRDER        HOLD-DOWN PTS.  12.00 FT FROM CL
       SPAN  LENGTH  =   112.00 FT        GIRDER   SPACING=     9.25 FT
       DECK OVERHANG =   4.1700 FT        WIDTH   OF  CURB   =  6.9200 FT
       DECK EMBEDMENT=  -2.50   IN

    COMPOSITE SECTION PROPERTIES
             AREA=  1738.59 IN**2              I= 1434825. IN**4
           WEIGHT=   2.0641 K/FT              YT=   -29.70 IN
            DEPTH=    81.50 IN                YB=    51.80 IN
       SLAB WIDTH=   105.54 IN            SM TOP=  -48317. IN**3
           SLAB Q=   16735. IN**3     SM BOTTOM=   27697. IN**3

    ADDITIONAL LOADS
       TYPE            MAGNITUDE        LOC. FROM LEFT END
       DIAPHRAGM        5.500 KIPS          56.000 FT
       SUPER. DL        0.550 KLF       0.000 FT TO 112.000 FT
       SIDWLK LL        0.322 KLF       0.000 FT TO 112.000 FT
```

Should be 2.8 k but say ok as is

* May be increased per AASHTO 1.3.1(B)(2)(a)

JOB NO. 9101 25TH AVE BRIDGE OVER ARIZONA CANAL DIV. CHAN. PROGRAM P7348

PROBLEM GIRDER DESIGN -EXTERIOR CHECK BY CJB CHKD JFF

****
MOMENTS(FT.KIPS) AT TENTH POINTS
****

POINT	GIRDER DEAD LOAD	SLAB DEAD LOAD	DIAPHRAGM DEAD LOAD
0	0.0	0.0	0.0
1	638.0	576.9	30.8
2	1134.2	1025.6	61.6
3	1488.6	1346.1	92.4
4	1701.3	1538.4	123.2
5	1772.2	1602.5	~~154.0~~ 78.4
6	1701.3	1538.4	123.2
7	1488.6	1346.1	92.4
8	1134.2	1025.6	61.6
9	638.0	576.9	30.8
10	0.0	0.0	0.0

POINT	LIVE LOAD	SIDEWALK LIVE LOAD	SUPERIMPOSED DEAD LOAD
0	0.0	0.0	0.0
1	584.3	181.8	310.5
2	1025.5	323.1	551.9
3	1323.6	424.1	724.4
4	1498.5	484.7	827.9
5	1540.3	504.9	862.4
6	1498.5	484.7	827.9
7	1323.6	424.1	724.4
8	1025.5	323.1	551.9
9	584.3	181.8	310.5
10	0.0	0.0	0.0

JOB NO. 9101 25TH AVE BRIDGE OVER ARIZONA CANAL DIV. CHAN. PROGRAM P7348

PROBLEM GIRDER DESIGN -EXTERIOR CHECK BY CJB CHKD JFF

****
SHEARS(KIPS) AT TENTH POINTS
****

POINT	GIRDER DEAD LOAD	SLAB DEAD LOAD	DIAPHRAGM DEAD LOAD
0	63.3	57.2	2.8
1	50.6	45.8	2.8
2	38.0	34.3	2.8
3	25.3	22.9	2.8
4	12.7	11.4	2.8
5	0.0	0.0	2.8
6	-12.7	-11.4	-2.8
7	-25.3	-22.9	-2.8
8	-38.0	-34.3	-2.8
9	-50.6	-45.8	-2.8
10	-63.3	-57.2	-2.8

±1.4

POINT	LIVE LOAD	SIDEWALK LIVE LOAD	SUPERIMPOSED DEAD LOAD
0	58.6	18.0	30.8
1	52.6	14.4	24.6
2	46.6	10.8	18.5
3	40.5	7.2	12.3
4	34.3	3.6	6.2
5	-28.1	0.0	0.0
6	-34.3	-3.6	-6.2
7	-40.5	-7.2	-12.3
8	-46.6	-10.8	-18.5
9	-52.6	-14.4	-24.6
10	-58.6	-18.0	-30.8

JOB NO. 9101 25TH AVE BRIDGE OVER ARIZONA CANAL DIV. CHAN. PROGRAM P7348

PROBLEM GIRDER DESIGN -EXTERIOR CHECK BY CJB CHKD JFF

****

PRESTRESS DESIGN

****

** DESIGN BASED ON 46-1/2 IN.DIA.STRANDS ****
** YCL = 5.1300 IN YEND = 21.3000 IN ****
** INITIAL PRESTRESS FORCE = 1330.18 KIPS ****
** FINAL PRESTRESS FORCE = 1133.12 KIPS ****

** CONC. RELEASE STRENGTH REQD = 4.000 KSI ****

TENTH POINT STRESSES IN PSI

	INITIAL CONDITION		FINAL CONDITION			
PT.	INTERFACE	BOT	TOP	INTERFACE		BOT
0	-251.6	-2221.1	0.0	0.0	-214.3	-1892.1
1	-357.5	-2112.9	-207.1	-140.8	-895.7	-915.4
2	-380.8	-2089.1	-365.6	-248.7	-1377.1	-208.9
3	-321.5	-2149.8	-475.6	-323.4	-1658.5	227.5
4	-198.5	-2275.4	-540.8	-367.8	-1759.4	418.9
5	-239.8	-2233.2	-559.3	-380.4	-1872.3	559.4
** FINAL TENSILE STRESS EXCEEDS FFT ****						
6	-198.5	-2275.4	-540.8	-367.8	-1759.4	418.9
7	-321.5	-2149.8	-475.6	-323.4	-1658.5	227.5
8	-380.8	-2089.1	-365.6	-248.7	-1377.1	-208.9
9	-357.5	-2112.9	-207.1	-140.8	-895.7	-915.4
10	-251.6	-2221.1	0.0	0.0	-214.3	-1892.1

AT PT. 5 FCIR = -2091.2 FCDS = 1234.9 **

** Allowable stress $= 1.25\left(6\sqrt{f'_c}\right)$ AASHTO 1.3.1(B)

Compute req'd f'_c :

$559 = 1.25 \times \left(6\sqrt{f'_c}\right) \Longrightarrow f'_c = 5500$ psi

$\longrightarrow$ Use $f'_c = 5500$ psi for all girders

JOB NO. 9101 25TH AVE BRIDGE OVER ARIZONA CANAL DIV. CHAN. PROGRAM P7348

PROBLEM GIRDER DESIGN -EXTERIOR CHECK BY CJB CHKD JFF

TENTH POINT ULTIMATE STRENGTH CHECK

PT.	APPLIED ULTIMATE MOMENT 1.3/PHI(D+5/3(L+I)) +1.3000(C+S) (FT-KIPS)	ULTIMATE MOMENT CAPACITY (FT-KIPS)
0	0.00	8764.63
1	3682.82	9414.36
2	6527.42	10064.33
3	8533.81	10714.51
4	9745.05	11318.40
5	10139.60	11318.40
6	9745.05	11318.40
7	8533.81	10714.51
8	6527.42	10064.33
9	3682.82	9414.36
10	0.00	8764.63

SHEAR DESIGN
** MIN. AREA OF STEEL = 0.24 SQ.IN./FT. ****
** MAX. STIRRUP SPACING = 24.00 IN. ****

PT.	ULT. VERT. SHEAR 1.3/PHI(D+5/3(L+I)) +1.3000(C+S) (KIPS)	AREA OFSTL. (SQ IN/FT)	EXCESS HORIZ. SHEAR (K/FT)
0	406.937	0.75	0.000
1	340.245	0.53	0.000
2	273.387	0.33	0.000
3	206.335	0.24	0.000
4	139.055	0.24	0.000
5	-63.561	0.24	0.000
6	-139.055	0.24	0.000
7	-206.335	0.24	0.000
8	-273.387	0.33	0.000
9	-340.245	0.53	0.000
10	-406.937	0.75	0.000

JOB NO. 9101 25TH AVE BRIDGE OVER ARIZONA CANAL DIV. CHAN. PROGRAM P7348

PROBLEM GIRDER DESIGN -EXTERIOR CHECK BY CJB CHKD JFF

TENTH POINT DEFLECTIONS (IN. DOWNWARD)

PT.	GDR DL	IN.PRE.	DECK	DIA.	SUPER DL	TOT DL	SIDWK	LL
0	0.0000	0.0000	0.0000	0.0000	0.0000	0.0000	0.000	0.000
1	0.4467	-0.9935	0.3613	0.0262	0.0994	-0.0599	0.058	0.217
2	0.8452	-1.8230	0.6836	0.0503	0.1880	-0.0559	0.110	0.351
3	1.1572	-2.4532	0.9359	0.0701	0.2574	-0.0326	0.150	0.475
4	1.3553	-2.8491	1.0961	0.0835	0.3015	-0.0127	0.176	0.535
5	1.4231	-2.9826	1.1510	0.0885	0.3166	-0.0034	0.185	0.553
6	1.3553	-2.8491	1.0961	0.0835	0.3015	-0.0127	0.176	0.535
7	1.1572	-2.4532	0.9359	0.0701	0.2574	-0.0326	0.150	0.475
8	0.8452	-1.8230	0.6836	0.0503	0.1880	-0.0559	0.110	0.351
9	0.4467	-0.9935	0.3613	0.0262	0.0994	-0.0599	0.058	0.217
10	0.0000	0.0000	0.0000	0.0000	0.0000	0.0000	0.000	0.000

** MAX. LL DEFLECTION = 0.5051 IN. ****
** ALLOW. LL DEFLECTION = 1.6800 IN. ****

END OF JOB

SVERDRUP & PARCEL

JOB 9101 Flood Control District

COMPUTATIONS FOR 25th Ave Bridge @ A.C.D.C.

SHEET NO. 31 OF

DATE 11/84

BY CJB CHKD JFF

Girder Design

Stirrups

Plot stirrup area req'd vs span pt

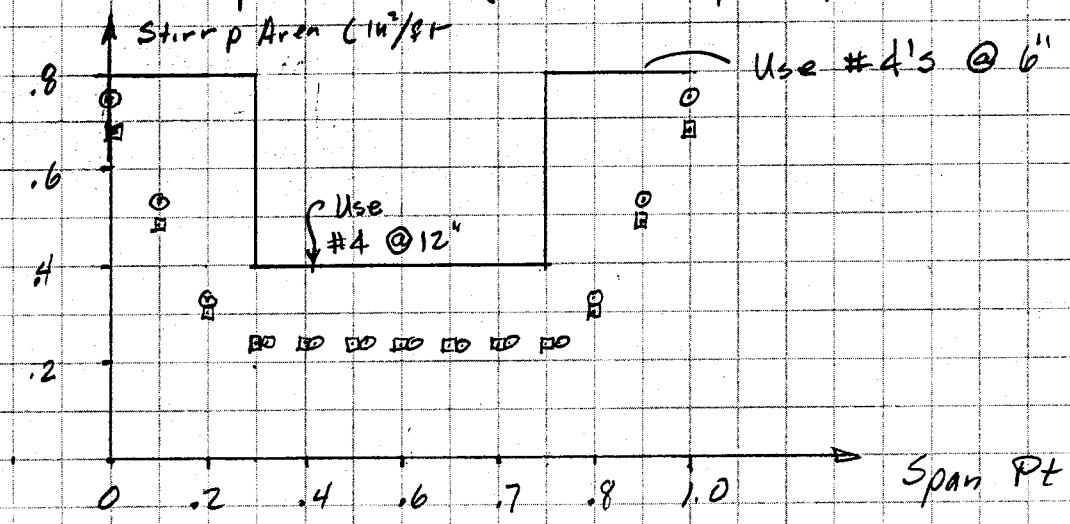

⊡ = Interior Girder

⊙ = Exterior Girder

SVERDRUP & PARCEL

JOB 9101 Flood Control District

COMPUTATIONS FOR 25TH Ave Bridge @ A.C.D.C.

SHEET NO. 32 OF

DATE 11/84

BY CJB CHKD JFF

Girder Design

End Zone Requirements

P after transfer

$P = (202 - 16.43) \times .153 \times 46 = 1306^K$

$4\% P = .04 \times 1306 = 52\ k$ AASHTO 1.6.15

$d = 72 - 21.30 = 50.70''$, $d/4 = 12.68''$ say 12"

$A_{req'd} = \frac{52}{20} = 2.60\ in^2$

→ Use 3 sets of #6 stirrups , $A_{s_{prov}} = 2.64\ in^2$

SVERDRUP & PARCEL

JOB 9101 Flood Control District

COMPUTATIONS FOR 25TH Ave Bridge @ AC.DC.

SHEET NO. 33 OF

DATE 11/84

BY CJB CHKD JFF

Girder Design

Stirrups

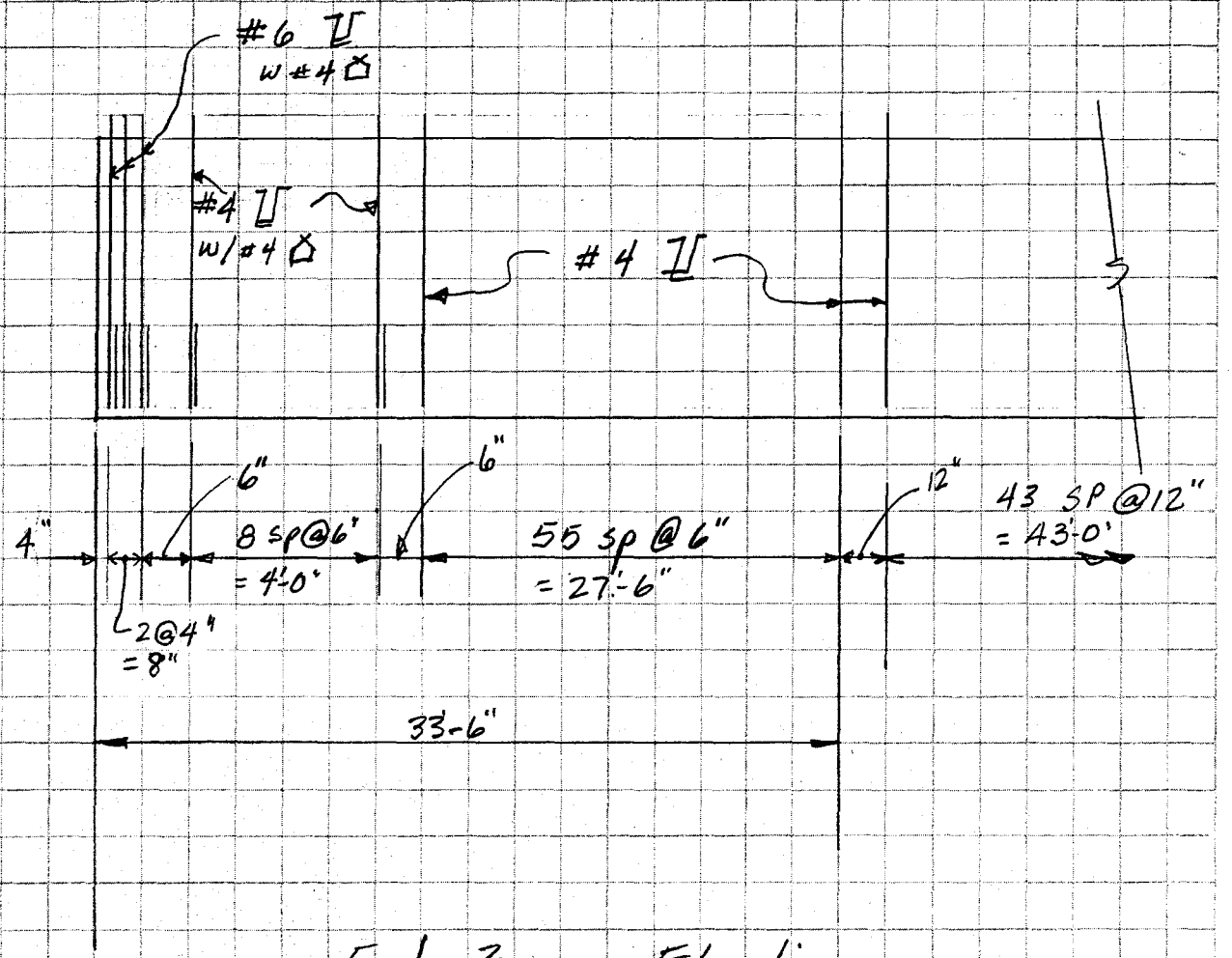

End Zone Elevation

SVERDRUP & PARCEL

JOB 9101 Flood Control District

COMPUTATIONS FOR 25th Ave Bridge @ A.C.D.C.

SHEET NO. 34 OF

DATE 11/84

BY CJB CHKD JFF

Girder Design

Stirrups

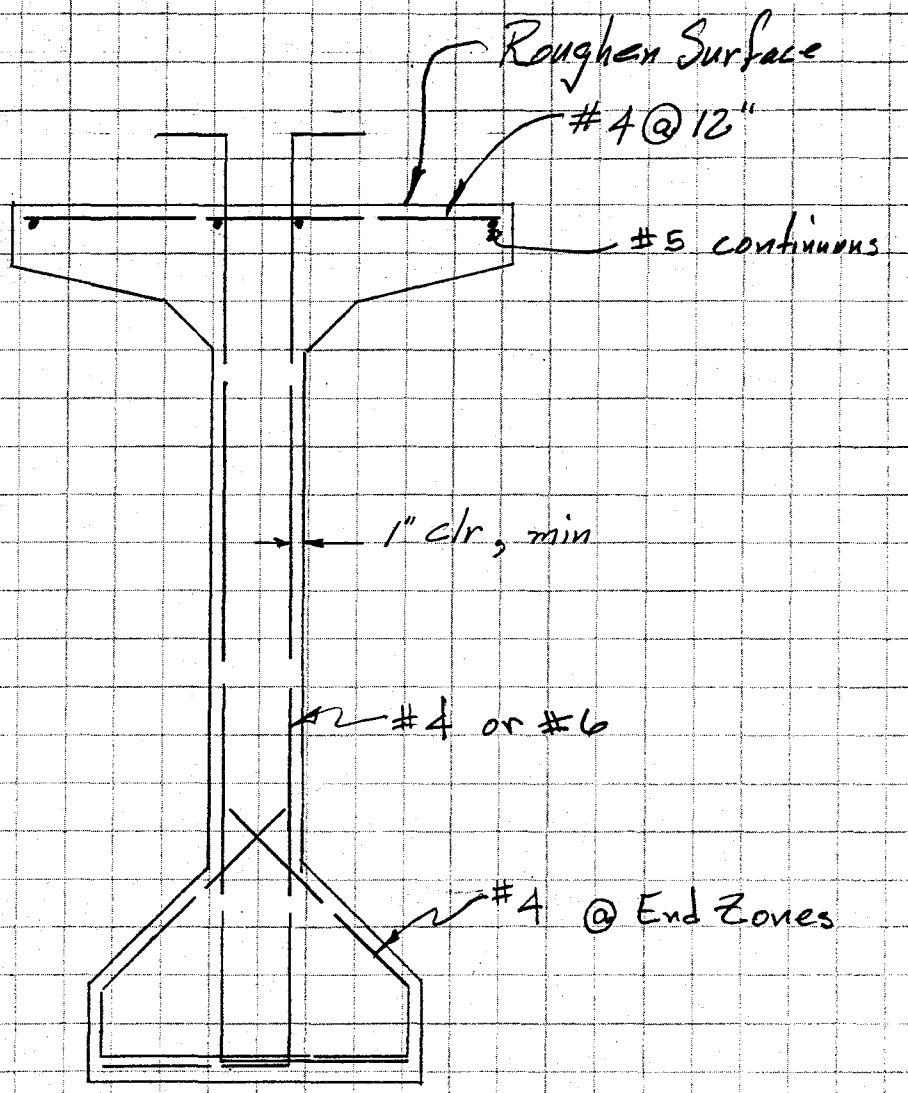

Stirrup Layout

Girder Design

Post-Tension Alternate

Assume:

1. 46 - ½ ϕ strands in 2-4" ϕ galvanized rigid steel ducts (24 Gage)

2. Use low-relax strand therefore losses same as pretension except for elastic shortening.

$$\Delta f_s = 41 - \frac{14.69}{2} = 33.66 \text{ ksi}, \text{ say } 34 \text{ ksi}$$

or 26 ksi w/o ES

Compute c.g.s.

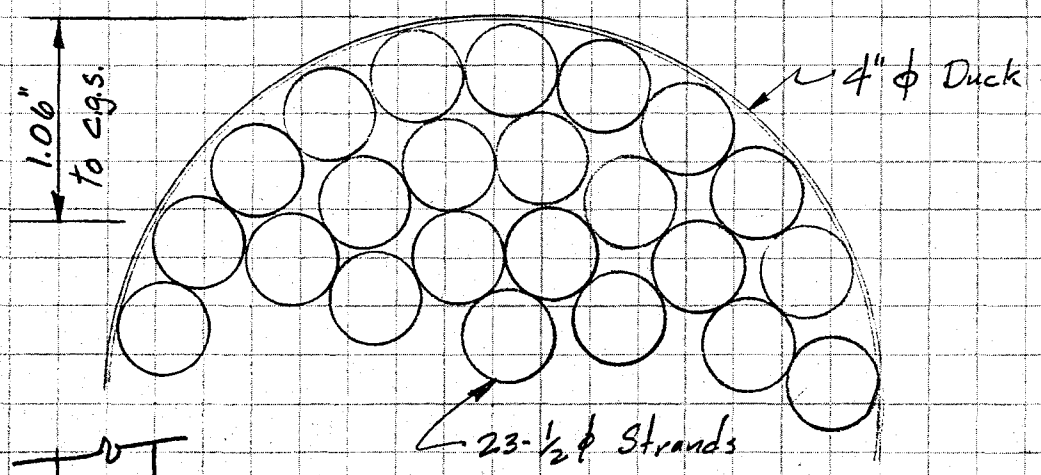

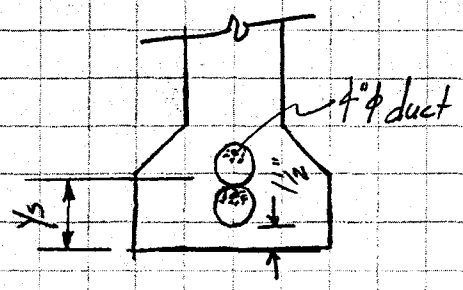

$$y_s = \frac{(9.5-1.06)\times 23 + (5.5-1.06)\times 23}{46} = 6.44''$$

cgs w.r.t. cgc = 36.38 − 6.44 = 29.94 in

SVERDRUP & PARCEL

JOB 9101 Flood Control District

COMPUTATIONS FOR 25th Ave Bridge @ ACDC

SHEET NO. 36 OF

DATE 11/84

BY CJB CHKD. JFF

Girder Design

Post-Tension Alternate

Compute P_i required to achieve 197 ksi

Friction

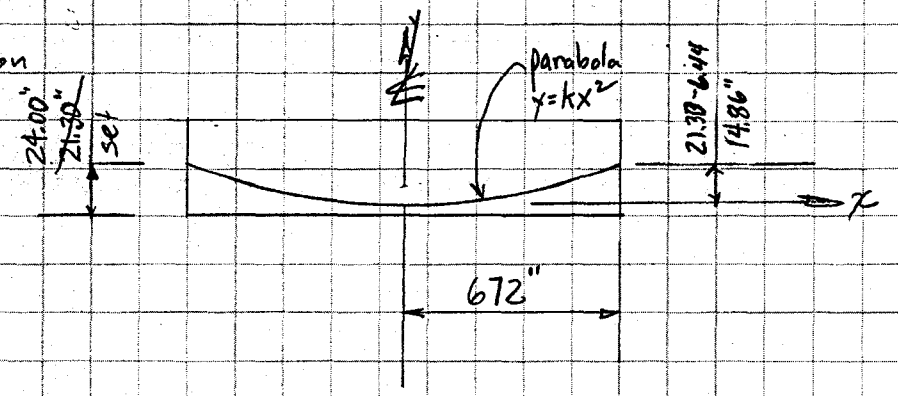

$K = .0002$ AASHTO 1.6.7

$\mu = .25$ AASHTO 1.6.7

$$y\big|_{x=672} = 14.86 = k\,672^2$$

$$k = \frac{14.86}{672^2}$$

$$y = \frac{14.86}{672^2}x^2$$

$$y' = \frac{29.72}{672^2}x_0$$

$$y'\big|_{x=672} = \alpha_{\text{℄ to end}} = \frac{29.72 \times 672}{672^2} = .0442$$

$$KL + \mu\alpha = .0002 \times 56 + .25 \times .0442 = 0.022 < .3$$

$$\therefore\ T_0 = T_x(1 + KL + \mu\alpha) = T_x \times 1.022$$

SVERDRUP & PARCEL

JOB 9101 Flood Control District

COMPUTATIONS FOR 25TH Ave Bridge @ A.C.D.C.

SHEET NO. 37 OF

DATE 11/84

BY CJB CHKD JFF

Girder Design

Post Tension Alternate

Compute P_f @ midspan

Girder Moment = 1772 k-ft

Slab+Haph. Moment = 1685 k-ft

Wearing Surf. & SW = 862 K-ft (composite)

LL+I Moment = 1767 k-ft

for $f'_c = 5000$ psi

$$.424 = -\frac{P_f}{1085} - \frac{P_f \times 36.38 \times 29.94}{733,320} + \frac{1772 \times 12 \times 36.38}{733,320} + \frac{1685 \times 12 \times 36.38}{733,320} + \frac{862 \times 12 \times 52.24}{1,454,500} + \frac{1767 \times 12 \times 52.24}{1,454,500}$$

$$.424 = -\frac{P_f}{415} + 1.05 + 1.00 + 0.37 + 0.76$$

$P_f = 1148$ k

Take initial stress @ midspan after anchor set

$f_s = 197$ ksi or $.73 \times f_{pu}$ max

SVERDRUP & PARCEL

JOB 9101 Flood Control District

COMPUTATIONS FOR 25TH Ave Bridge @ ACDC

SHEET NO. 38 OF

DATE 11/84

BY CJB CHKD JFF

Girder Design

Post-Tension Alternate

Compute P_i required to achieve 197 ksi max

Step #1 tension tendon #1

	f_s @ midspan		f_s @ jack
cable #1	192 ksi × 1.022 (friction)	⟹	196 ksi

Step #2 tension tendon #2

cable #1	185 ksi (step #1 less ES from step #2)		189 ksi
cable #2	185 ksi		189 ksi

$$\#\text{strand req'd} = \frac{1148}{(185-26)\times .153} = 47 \approx 46 \text{ orig assumed OK}$$

$$P_i \text{ @ jack} = 48 \times 189 \times .153 = 1388 \text{ K}$$

$$P_{f\text{ @ midspan}} = (185-26) \times .153 \times 4 = 1143^K < 1148^K$$

but say OK

Δf_s = 26 ksi exluding anchor set, elastic shortening & friction

SVERDRUP & PARCEL

JOB 9101 Flood Control District

COMPUTATIONS FOR 25TH Ave Bridge @ ACDC

SHEET NO. 39 OF

DATE 11/84

BY CVB CHKD VFF

Girder Design

Post-Tension Alternate

End Block

$P_i = 1388$ K after anchor set

End Block dimensions 72" x 28" (neglecting top flanges)

$A = 72 \times 28 = 2016 \text{ in}^2$

$I = \frac{28}{12} \times 72^3 = 870{,}912 \text{ in}^4$

$$f_{top} = -\frac{1388}{2016} + \frac{1388 \times 12 \times 36}{870{,}912} = 0$$

$$f_{bottom} = -\frac{1388}{2016} - \frac{1388 \times 12 \times 36}{870{,}912} = -1.377 \text{ ksi} \times 28'' = -38.556 \text{ k/in}$$

P_i will be distributed by heavey steel anchor plates, Assume plate size will be 17" ⌀. Then P_i is distributed over 34"

Idealize end block thus:

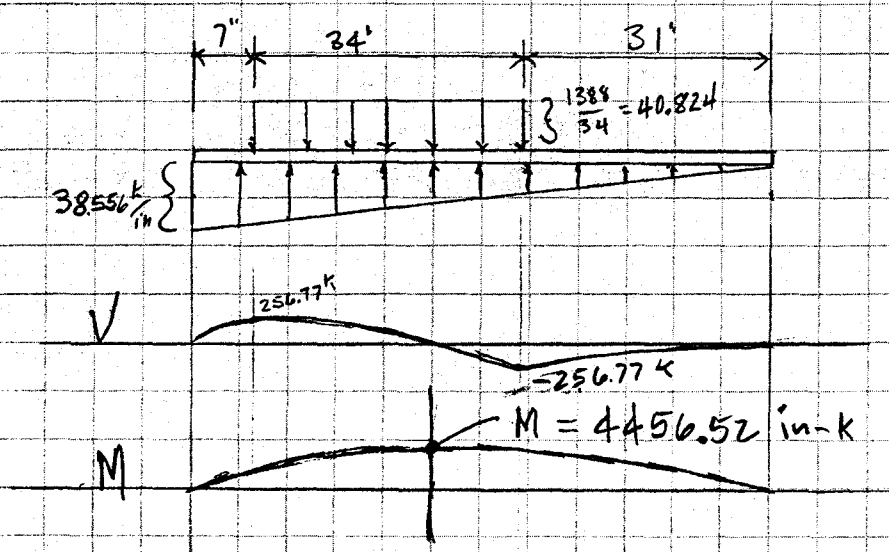

SVERDRUP & PARCEL

JOB 9101 Flood Control District

COMPUTATIONS FOR 25 TH Ave Bridge @ ACDC

SHEET NO. 40 OF

DATE 11/84

BY CJB CHKD JFF

Girder Design

Post-Tension Alternate

End Block

Compute Shears & Moments in End Block

$x = 0''$ to $x = 7''$

$$w(x) = -\frac{38.556}{72}x + 38.556 = -0.536x + 38.556$$

$$V(x) = -0.268x^2 + 38.556x \quad , V(7.0) = 256.77^k$$

$$M(x) = -0.089x^3 + 19.28x^2 \quad , M(7.0) = 914.19 \text{ in-k}$$

$x = 7''$ to $x = 41''$

$$w(x) = -0.536x + 38.556 - 40.824 = -0.536x - 2.268$$

$$V(x) = -0.268x^2 - 2.268x + V = -0.268x^2 - 2.268x + 285.78$$

$$V(7) = 256.77 = -.268(49) - 2.268(7) + V \Rightarrow V = 285.78^k$$

$$V = 0 = -0.268x^2 - 2.268x + 285.78 \Rightarrow x = 28.70''$$

$$M(x) = -.089x^3 - .756x^2 + 285.78x + M = -.089x^3 - .756x^2 + 285.78x - 1018.70$$

$$M(7) = 914.19 = -.089 \times 7^3 - .756 \times 7^2 + 285.78 \times 7 + M \Rightarrow M = 1018.70$$

$$M_{max}(28.70) = 4456.52 \text{ in-k} \longleftarrow \text{Use for design}$$

$$= 4456.52/12 = 371 \text{ k-ft}$$

SVERDRUP & PARCEL

JOB 9101 Flood Control

COMPUTATIONS FOR 25th Ave Bridge @ ACDC

SHEET NO. 41 OF

DATE 11/84

BY CJB CHKD JFF

Girder Design

Post-Tension Alternate

End Block

$x = 41''$ to $x = 72''$

$w(x) = -0.536x + 38.556$

$V(x) = -0.268x^2 + 38.556x + V = -0.268x^2 + 38.556x - 1386.72$

$V(72) = 0 = -.268 \times 72^2 + 38.556 \times 72 + V \Rightarrow V = -1386.72$

$V(41) = -256.43^k$

$V = 0 = -.268x^2 + 38.556x - 1386.72 \Rightarrow x = 71.92''$

Length of block $= \frac{3}{4} \times 72 = 54''$

Take $d = 27'' + \frac{27''}{2} = 40.50''$

$A_s = \frac{M}{f_s j d}$, $j \approx 0.9''$

$A_{s_{reqd}} = \frac{4456.52}{20 \times .9 \times 40.5} = 6.11 \text{ in}^2$

or $A_{s_{reqd}} = \frac{6.11}{2.25} = 2.72 \text{ in}^2/\text{ft}$ (in addition to shear steel)

$A_{s_{\substack{reqd \\ shear}}} = .75 \text{ in}^2/\text{ft}$, $A_{s_{\substack{reqd \\ total}}} = 2.72 + .75 = 3.47 \text{ in}^2/\text{ft}$

→ Use #5 stirrups, 4 bars/set @ 4"

$A_{s\,prov} = (4 \times .31)3 = 4.72 \text{ in}^2/\text{ft}$

SVERDRUP & PARCEL

JOB 9101 Flood Control District

COMPUTATIONS FOR 25 TH Ave Bridge @ ACDC

SHEET NO. 42 OF

DATE 11/84

BY CJB CHKD JFF

Girder Design

Post-Tension Alternate - Stirrups

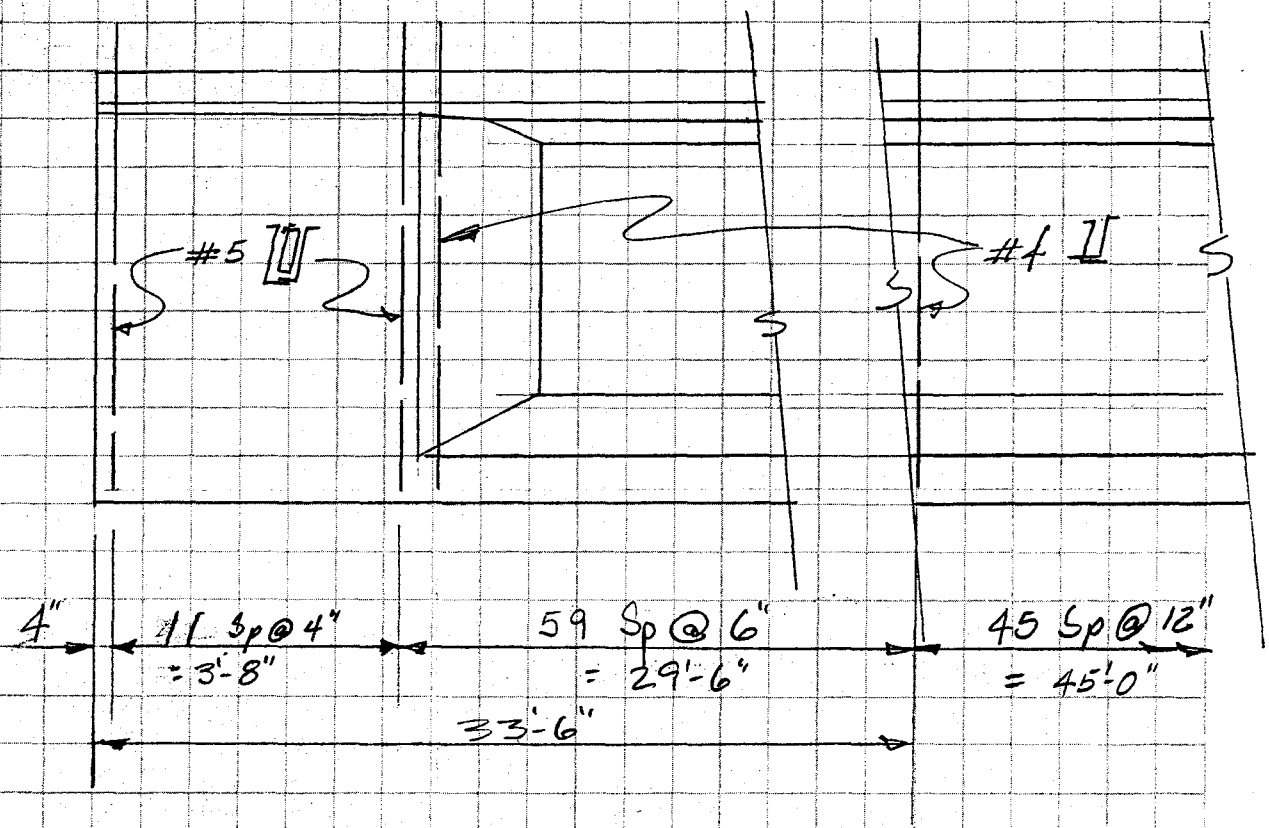

End Block Elevation

SVERDRUP & PARCEL

JOB 9101 Flood Control District

COMPUTATIONS FOR 25th Ave Bridge @ ACDC

SHEET NO. 43 OF

DATE 11/84

BY CWB CHKD JFF

Girder Design

Post-Tension Alternate - Stirrups

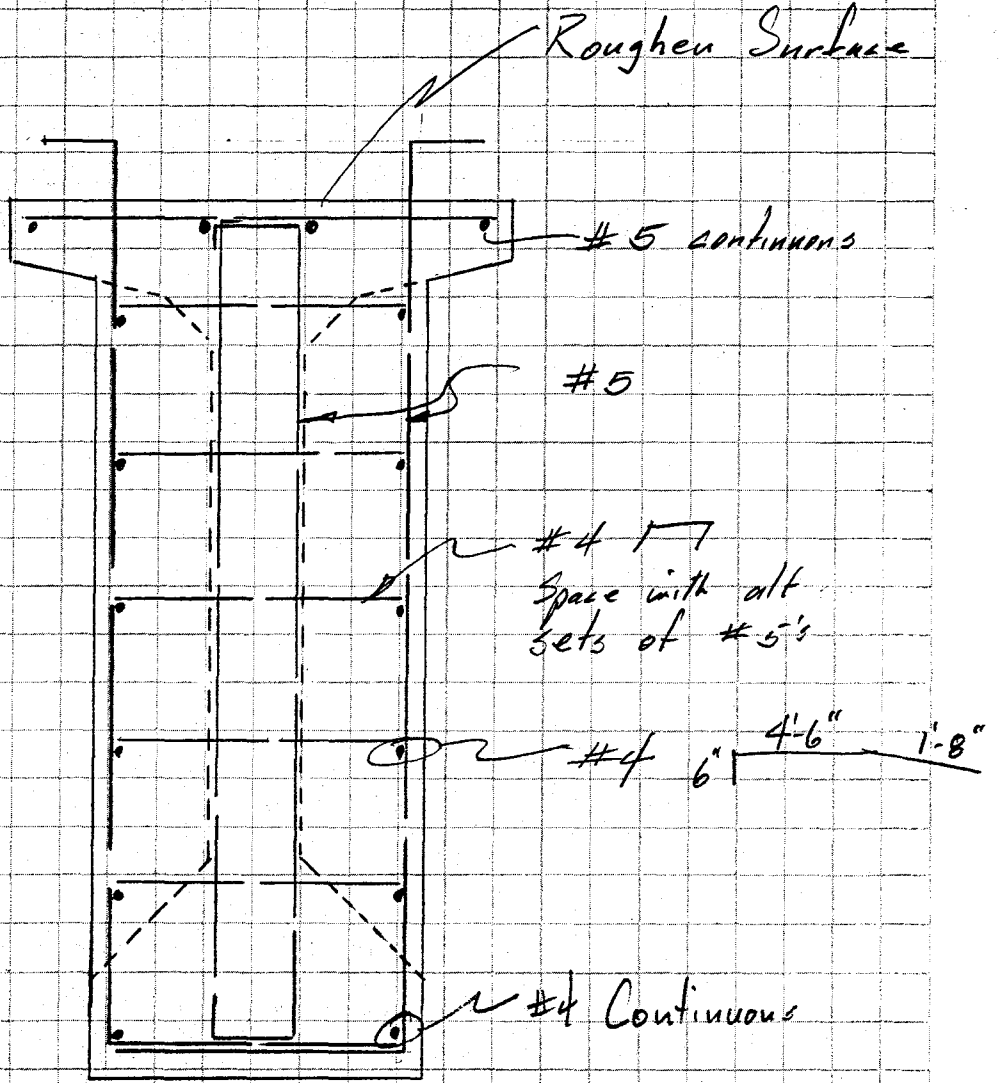

Stirrup Layout End Block

SVERDRUP & PARCEL

JOB 9101 Flood Control District

COMPUTATIONS FOR 25TH Ave Bridge @ ACDC

SHEET NO. 44 OF

DATE 11/84

BY CJB CHKD JFF

Slab Design

$f'_c = 3000$ psi , $f_c = .4 \times 3000 = 1200$ psi , $n = 9$

$f_s = 20{,}000$ psi (Grade 40 rebar)

Girder Spacing = 9'-3"

Girder Flange = 3'-6" for Type VI

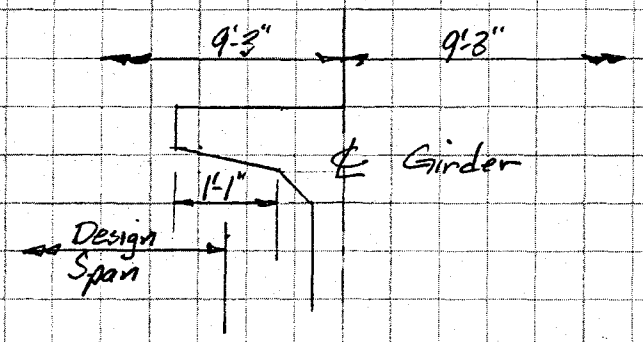

Detail — Top of Girder Flange

Design Span = (9.25' − 3.5') + 1.08' = 6.83'

Slab thickness = 7.5" (Includes ½" Integral Wearing Surface)

Impact Factor = 1.3 AASHTO 1.2.12

Bridge Deck Slab Design (cont'd.)

Service Load Design method (also known as Allowable Stress Design method or Working Stress Design method).

$w_{DL} = \frac{7.5''}{12''} \times 150\,pcf = 94\,\#/'$

$w_{FWS} = 25\,\#/'$

$\Big\}\; w_D = 119\,\#/'$

LL Moment: $M_L = \frac{S+2}{32} \times P \times .8 = \frac{6.83+2}{32} \times 16000 \times .8 = 3{,}530\,'\#$

I Moment: $M_I = 30\% \times 3{,}530 = 1{,}060$

$M_{L+I} = 4{,}590\,'\#$

DL Moment: $M_D = \frac{wS^2}{8} \times .8 = \frac{wS^2}{10} = \frac{119 \times 6.83^2}{10} = 560$

$M_{D+L+I} = 5{,}150\,'\#$

Effective Slab Thk. $= 7.5'' - .5'' = 7''$

Max. Bar Spcg. $= 1.5 \times 7''$ Eff. $= 10.5'' < 18''$ (AASHTO 1.5.5 (F))

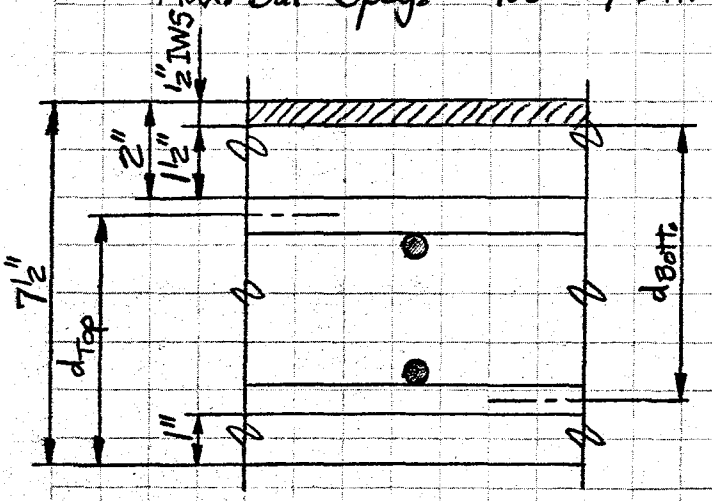

Try #6@6" Top

$A_s = .44\,\square''' \times 12''/6'' = 0.880\,\square''/'$

$d_{Top} = 7\tfrac{1}{2} - 2 - \frac{.750}{2} = 5.12''$

$np = \frac{9 \times 0.880}{12 \times 5.12} = 0.1289$

$k = .395 \qquad j = .868$

$f_s = \frac{5150 \times 12}{.880 \times .868 \times 5.12} = 15{,}796\,psi < 20\,ksi$ OK

$f_c = \frac{f_s}{n} \times \frac{k}{1-k} = \frac{15{,}796}{9} \times \frac{.395}{.605} = 1{,}146\,psi < 1{,}200\,psi$, OK

Use #6@6" Top Transv. Bars

Try #5@6" Bottom

$A_s = .31\,\square'' \times 12''/6'' = 0.620\,\square''/'$

$d_{Bott.} = 7\tfrac{1}{2} - 2 - 1 - \frac{.625}{2} = 5.69''$

$np = \frac{9 \times 0.620}{12 \times 5.69} = 0.08172$

$k = .331 \qquad j = .890$

$f_s = \frac{5150 \times 12}{.620 \times .890 \times 5.69} = 19{,}683\,psi < 20\,ksi$, OK

$f_c = \frac{19{,}683}{9} \times \frac{.331}{.669} = 1{,}082\,psi < 1{,}200\,psi$, OK

Use #5@6" Bottom Transv. Bars

SVERDRUP & PARCEL

JOB 9101 FCDMC/ACDC Bridge @ 25th Ave. SHEET NO. 46 OF

DATE Nov 84

COMPUTATIONS FOR BY JFF CHKD D.P.C.

Bridge Deck Slab Design (cont'd.)

Longit. Distribution Reinf. (AASHTO 1.3.2(E))

$\frac{220}{\sqrt{S}} = \frac{220}{\sqrt{6.83}} = 84\%$, Use 67%

Req'd. $A_s = .67 \times .620^{\square''/'} = 0.42^{\square''/'}$ Bott. Reinf. in Middle-Half

$= .50 \times 0.42 = 0.21^{\square''/'}$ Bott. Reinf in Outer-Quarters

Use #5 @ 8" Bottom Longit. Reinf. in Middle-Half

Use #5 @ 1'-0" Top Longit. Reinf.

SVERDRUP & PARCEL

JOB 9101 Flood Control District

COMPUTATIONS FOR 25TH Ave Bridge @ ACDC

SHEET NO. 47 OF

DATE 11/84

BY CJB CHKD JFF

Traffic / Bicycle Rail

Use this configuration :

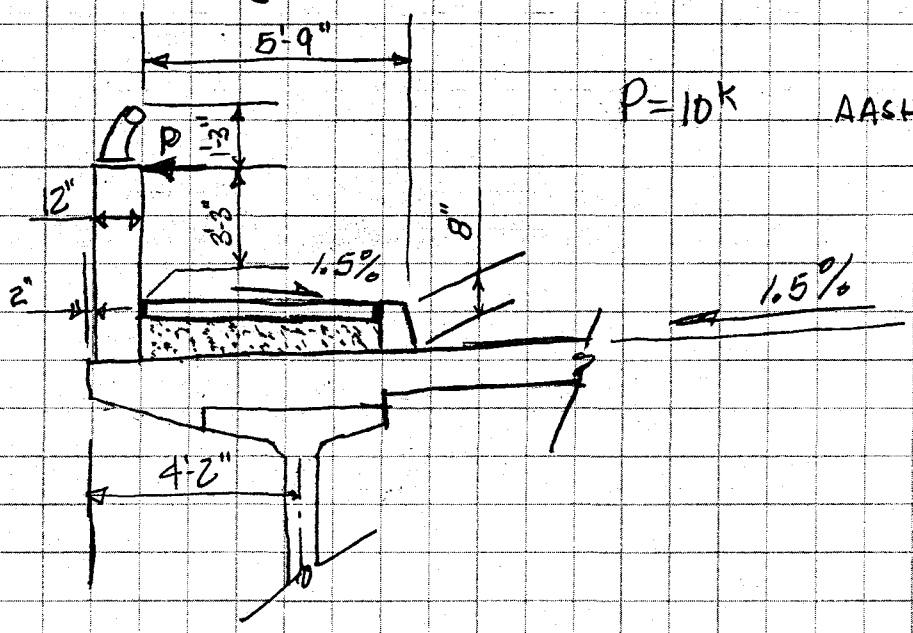

$P = 10^k$ AASHTO 1.18

$A_{rm} = 3.25' + .67' + .03 \times 5.75 = 4.09'$

Distribute moment over 5' of wall

$M_L = 4.09 \times 10/5 = 8.18$ k-ft/ft

$M_I = 8.18 \times .3 = \underline{2.45}$ k-ft/ft

$M_T = 10.63^k/ft$

Try # 6 @ 6"

$A_s = 0.88 \text{ in}^2/ft$, $d = 12" - 1.5" - .38" = 10.12"$

$n\rho = \frac{9 \times .88}{12 \times 10.12} = .065 \Rightarrow k = .302$, $j = 0.899$

$f_s = \frac{10.63 \times 12}{.88 \times .899 \times 10.12} = 15.933$ ksi , $f_c = \frac{15.933}{9} \times \frac{.302}{1-.302} = .766$ ksi

→ Use #6 @ 6" in wall

SVERDRUP & PARCEL

JOB 9101 Flood Control District

COMPUTATIONS FOR 25TH Ave Bridge @ ACDC

SHEET NO. 48 OF

DATE 12/84

BY CJB CHKD JFF

Traffic / Bicycle Rail

Check deck slab for moment due to rail

$M_T = 10.63$ k-ft/ft

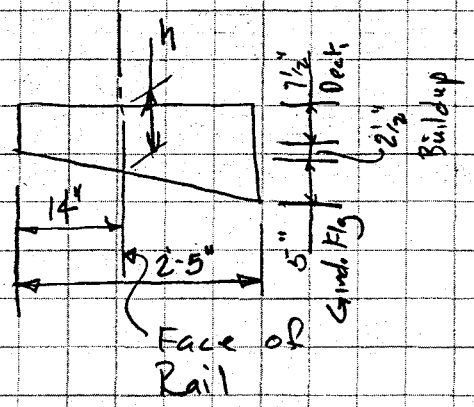

$h = 7.5" + \frac{7.5}{29} \times 14 = 11.12"$

$A_s = \#6 @ 6"$ (Top bars, deck)

$d = 11.12" - 2" - .38 = 8.74"$, $b = 12"$

$n\rho = \frac{9 \times .88}{12 \times 8.74} = .076 \Rightarrow k = 0.32$, $j = 0.893$

$f_s = \frac{10.63 \times 12}{.88 \times .893 \times 8.74} = 18.572$ ksi < 20 ksi

$f_c = \frac{18.572}{9} \times \frac{.320}{1-.32} = .971$ ksi < 1.2 ksi

OK

SVERDRUP & PARCEL

JOB 9101 Flood Control District

COMPUTATIONS FOR 25TH Ave Bridge @ ACDC

Slab Design & Bicycle Rail

SHEET NO. 49 OF

DATE 12/84

BY CWB CHKD JFF

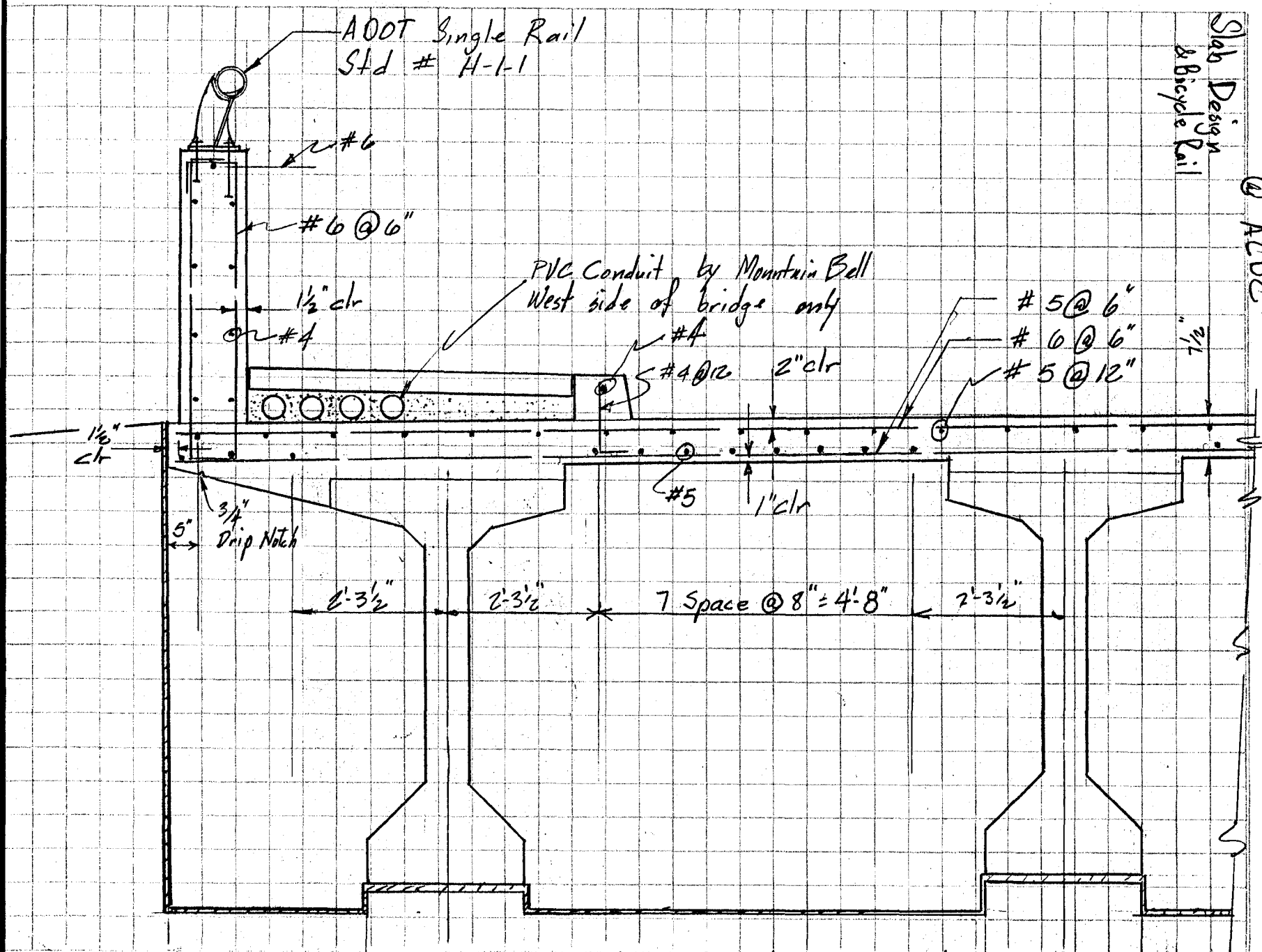

PART DECK SECTION

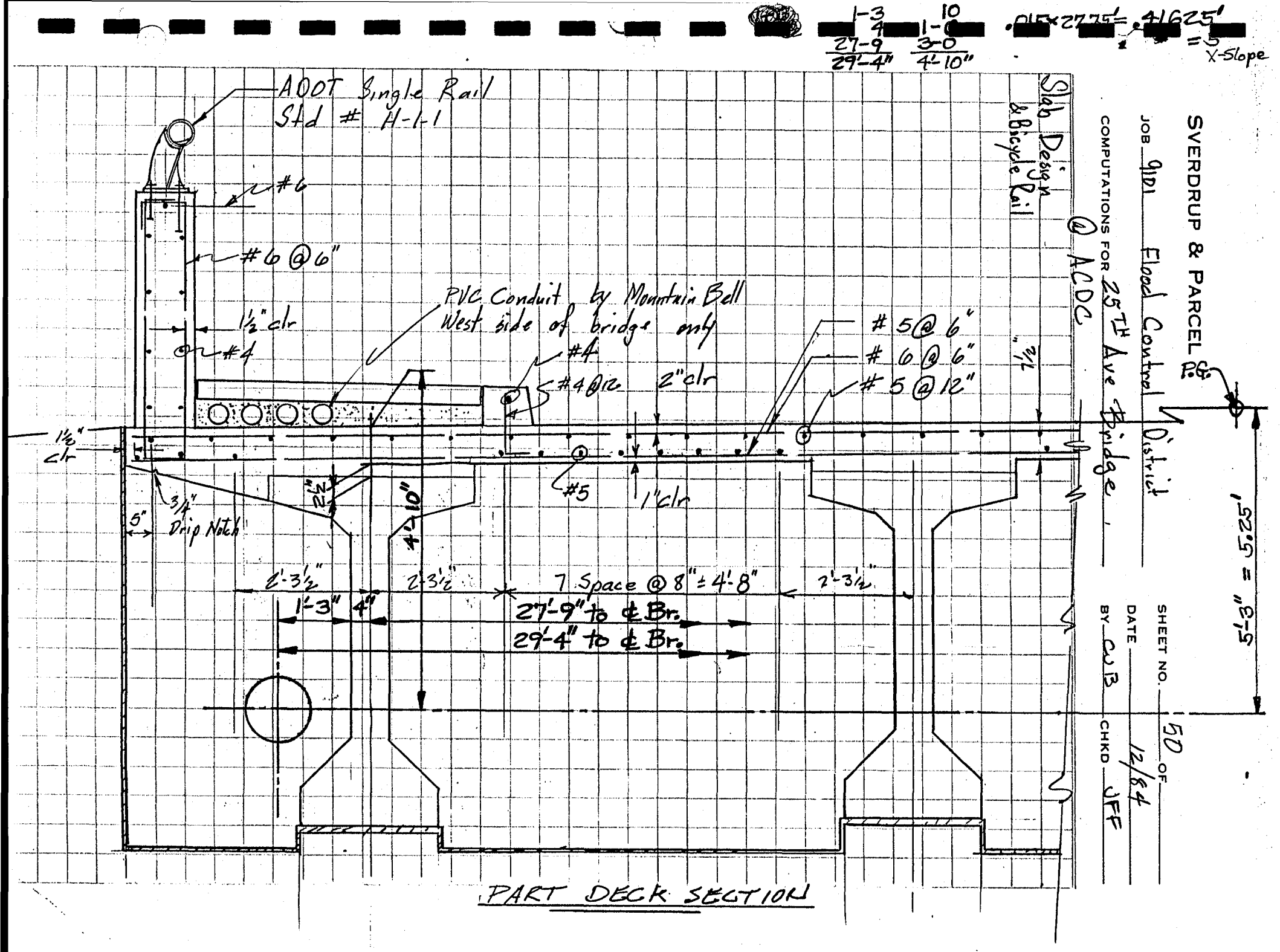

PART DECK SECTION

SVERDRUP & PARCEL

JOB 9101 Flood Control District

COMPUTATIONS FOR 25TH Ave Bridge @ ACDC

SHEET NO. 51 OF

DATE 1/85

BY CWB CHKD JFF

Girder Bearings

Bearings shall be elastomeric pads, neoprene or natural rubber.

Loads

Use interior girder as design basis.

Dead Load / Pad

Girder	63.3 k
Slab	54.7 k
Inter. Diaphragm	2.8 k
Superimposed	30.8 k
Total =	151.6 k

Live Load / Pad = 67.2 k

Total LL + DL = 218.8 k

Pad Width = 28" − 1.5 = 26.5" , use 26"

Allowable Stresses on pad

Dead Load = 500 psi

Live Load = 800 psi

SVERDRUP & PARCEL

JOB 9101 Flood Control District

COMPUTATIONS FOR 25TH Ave Bridge @ ACDC

SHEET NO. 52 OF

DATE 1/85

BY CJB CHKD JFF

Girder Bearings

Pad Length Req'd

length greater of : $\frac{218.8}{26 \times .8} = 10.52''$

$\frac{151.6}{26 \times .5} = 11.66''$

Try a pad 26" x 14" x 1", ½ laminations

Shape Factor, $S = \frac{L \times W}{2t(L+W)} = \frac{26 \times 14}{2 \times .5 \times (14+26)} = 9.10$

Ref: "Design of Neoprene Bearing Pads" by DuPont

$f_{tl} = \frac{218.8}{26 \times 14} = .60$ ksi < .80 ksi ok

$f_{dl} = \frac{151.6}{26 \times 14} = .42$ ksi < .50 ksi ok

Strain for Duro = 60 ± 5

$e_{tl} = 3.0\%$ < 7% ok

$e_{dl} = 2.0\%$

→ Use Bearing Pad 26" x 14" x 1" with ½" laminations

SVERDRUP & PARCEL

JOB 9101 Flood Control District

COMPUTATIONS FOR 25TH Ave Bridge @ ACDC

SHEET NO. 53 OF

DATE 1/85

BY OJB CHKD JFF

Screed Elevations

Notes 1. Obtain elevations other locations by subtracting "offset x .015" from tabulated elevations.

2. Interpolate for stations other than those tabulated.

3. Dimension "h" is the estimated distance from bottom of slab and top of girder

			℄ Bridge			
	Span Point	Station	Fin. Gr. Elev.	Est. Top of Girder Elev.	Dimension h	Screed Elev.
Abut. #1	0	4+76.00	1235.72	1234.89	2 1/2"	1235.72
	1	4+87.20	1236.64	1234.86	2 3/8"	1235.68
	2	4+98.40	1235.56	1234.81	2 3/8"	1235.63
	3	5+09.60	1235.49	1234.77	2 3/8"	1235.59
	4	5+20.80	1235.41	1234.70	2 1/2"	1235.53
	5	5+32.00	1235.33	1234.64	2 3/8"	1235.46
	6	5+43.20	1235.25	1234.54	2 1/2"	1235.37
	7	5+54.40	1235.17	1234.45	2 3/8"	1235.27
	8	5+65.60	1235.10	1234.35	2 3/8"	1235.17
	9	5+76.80	1235.02	1234.24	2 3/8"	1235.06
Abut #2	10	5+88.00	1234.94	1234.11	2 1/2"	1234.94

SVERDRUP & PARCEL

JOB 9101 Flood Control District

COMPUTATIONS FOR 25 TH Ave Bridge @ ACDC

SHEET NO. 54 OF

DATE 12/84

BY CJB CHKD VFF

Abutments

Dead Load

Superstructure

Future Wearing Surface @ 25 lb/ft²

Roadway Width = 50'

Roadway Length = 114'

Abutment Length = 73'-10"

$D_{FWS} = 50 \times .025 \times \frac{114}{2} = \underline{71.25\ k}/\text{abut}$ or

$D_{FWS} = 50 \times .025 \times \frac{114}{2} \times \frac{1}{73.83} = \underline{0.97\ k}/\text{ft of abut}$

Curb & Sidewalk

Cross section thus :

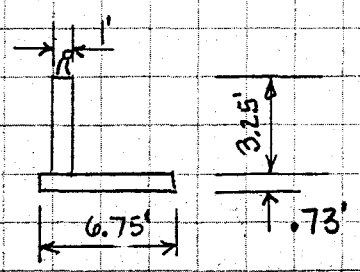

Say ADOT Rail weighs 15 lb/ft

$D_{C\&S} = \left[\left(.73 \times 6.75 + 3.25 \times 1\right) \times .15 + .015\right] \times 2 \times \frac{114}{2} = \underline{142\ k}/\text{abut}$ or

$D_{C\&S} = 142 \times \frac{1}{73.83} = \underline{1.92}\ k/\text{ft of abut}$

SVERDRUP & PARCEL

JOB 9101 Flood Control District

COMPUTATIONS FOR 25TH Ave Bridge @ ACDC

SHEET NO. 55 OF

DATE 12/84

BY GJB CHKD JFF

Abutments

Dead Load

Superstructure (cont.)

Deck Slab

Slab width = 63.83', Slab thickness = 7½"

Estimated build up @ girders = 2.5"

Fillet @ exterior girder

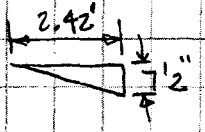

$D_{slab} = \left(63.83 \times \frac{7.5}{12} + 3.5 \times \frac{2.5}{12} \times 7 + 2.43 \times \frac{7.5}{12} \times 2\right) \times .15 \times \frac{114}{2} = \underline{411}$ K/abut or

$D_{slab} = 411/73.83 = \underline{5.56}$ K/ft of abut

Type VI AASHTO Girders

# of girders = 7 girders, weight = $\frac{1085}{144} \times .15 = 1.13$ K/ft girder

clear span = 110'

$D_{gird.} = 7 \times 1.13 \times \frac{110}{2} = \underline{435}$ K/abut or

$D_{gird.} = 435/73.83 = \underline{5.89}$ K/ft of abut

SVERDRUP & PARCEL

JOB 9101 Flood Control District

COMPUTATIONS FOR 25TH Ave Bridge @ ACDC

SHEET NO. 56 OF

DATE 12/84

BY CJB CHKD JFF

Abutments

Dead Load

Superstructure (cont.)

Abut. Diaphragm

Cross section thus:

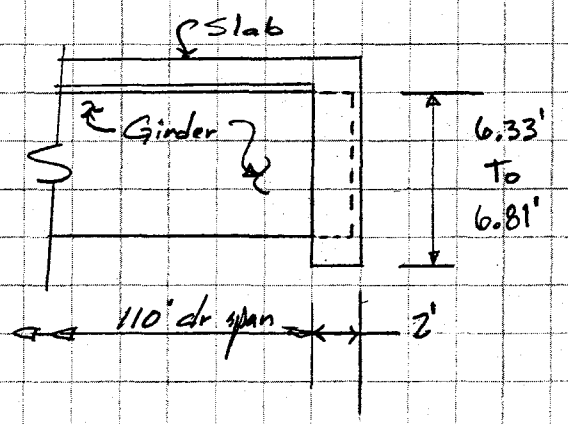

$D_{abut\ dia} = \frac{1}{2}(6.33+6.81) \times 2 \times 63.83 \times .15 = \underline{126\ k/abut}$ or

$D_{abut\ dia} = 126/73.83 = \underline{1.71\ k/ft}$ of abut

Inter. Diaphragm

Elevation thus:

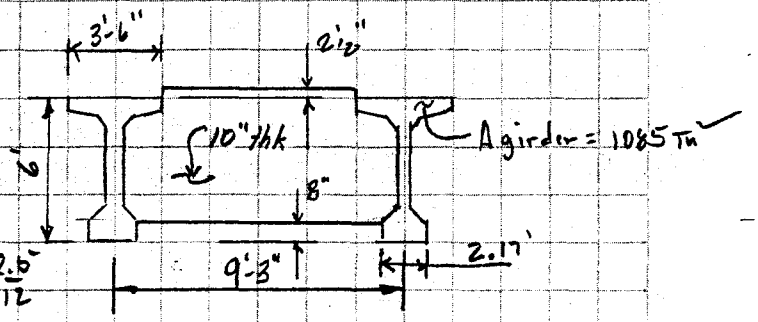

$A_{inter\ dia} = 6 \times 9.25 - \frac{1085}{144}$

$- 2.17 \times .67 + 5.75 \times \frac{2.6}{12}$

$= 47.71$ SF

$D_{inter\ dia} = 6 \times 47.71 \times \frac{10}{12} \times .15 \times \frac{1}{2} = \underline{18\ k/abut}$ or

$D_{inter\ dia} = 18/73.83 = \underline{0.24\ k/ft}$ of abut

SVERDRUP & PARCEL

JOB 9101 Flood Control District

COMPUTATIONS FOR 25TH Ave Bridge @ ACDC

SHEET NO. 57 OF

DATE 12/84

BY CJB CHKD JFF

Abutments

Dead Load

Superstructure (cont.)

Water Lines

Assume 12" ϕ ductile iron pipe ea. side of bridge

Pipe weight = 49 lb/ft
Water weight = 49 lb/ft } say 100 lb/ft

$D_{wl} = 2 \times .10 \times 110 \times 1/2 = \underline{11\ k}$ or

$D_{wl} = 11/73.83 = \underline{0.15\ k/ft}$

Substructure

Abutment wall

Elevation thus:

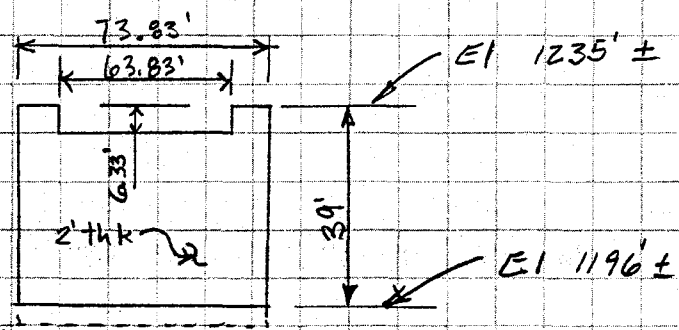

$D_{abut\ wall} = (73.83 \times 39 - 63.83 \times 6.33) \times 2 \times .15 = \underline{743\ k}$ or

$D_{abut\ wall} = 743/73.83 = \underline{10.06\ k/ft}$

SVERDRUP & PARCEL

JOB 9101 Flood Control District

COMPUTATIONS FOR 25TH Ave Bridge @ ACDC

SHEET NO. 58 OF

DATE 12/84

BY CJB CHKD JFF

Abutments

Dead Load

Summary:

D_{FWS} = 0.97 k/ft

$D_{c\&s}$ = 1.92

D_{slab} = 5.56

D_{gird} = 5.89

$D_{abut\ dia}$ = 1.71

$D_{inter\ dia}$ = 0.24

D_{wl} = 0.14

$D_{abut\ wall}$ = 10.06

D_{total} = 26.49 k/ft

For design use

D = 26.5 k/ft @ top of ftr

SVERDRUP & PARCEL

JOB 9101 Flood Control District

COMPUTATIONS FOR 25TH Ave Bridge @ A.C.D.C.

SHEET NO. 59 OF

DATE 12/84

BY CJB CHKD D.P.C.

Abutments

Live Load HS20-44

1. One Lane $R = 66.0^k$ @ span = 112'

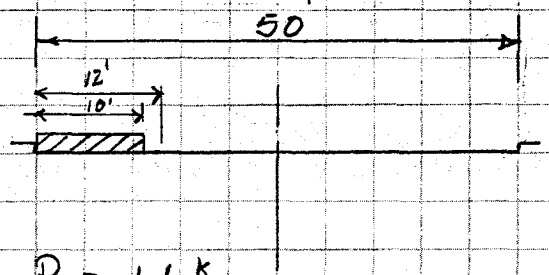

$P = 66^k$

$M = (25-5) \times 66 = 1320$ k-ft

$$L_1 = \frac{66}{73.83} + \frac{1320}{\left(\frac{73.83^2}{6}\right)} = \underline{2.35^k/ft \text{ of wall}}$$

2. Two Lanes

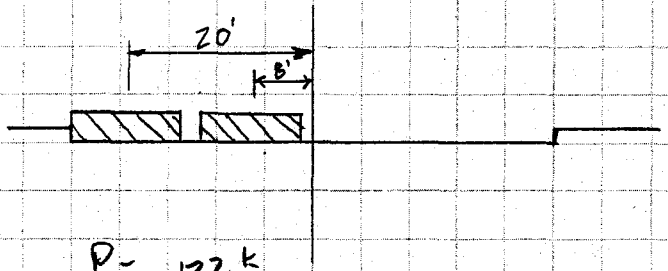

$P = 132^k$

$M = 1320 + 8 \times 66 = 1848$ k-ft

$$L_2 = \frac{132}{73.83} + \frac{1848}{\left(\frac{73.83^2}{6}\right)} = \underline{3.82\ k/ft \text{ of wall}}$$

SVERDRUP & PARCEL

JOB 9101 Flood Control District

COMPUTATIONS FOR 25th Ave Bridge @ ACDC

SHEET NO. 60 OF

DATE 12/84

BY CJB CHKD D.P.C.

Abutments

Live Load HS20-44

3. Three Lanes

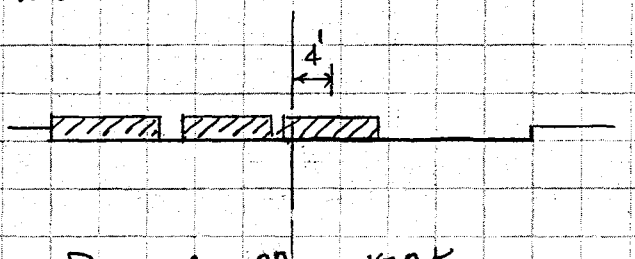

$P = 0.9 \times 198 = 178^k$

$M = 0.9 \times (1848 - 4 \times 66) = 1426$ k-ft

$L_3 = \frac{178}{73.83} + \frac{1426}{\left(\frac{73.83^2}{6}\right)} = \underline{3.98}$ k /ft of wall

4. Four Lanes

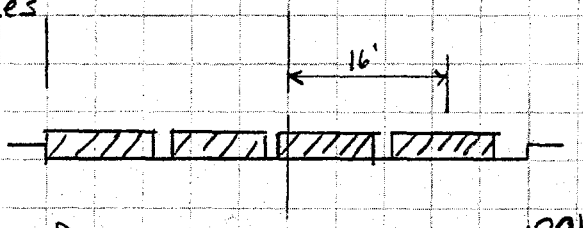

$P = .75 \times 4 \times 66 = 198^k$

$M = .0.75 \times (1848 - 4 \times 66 - 16 \times 66) = 396$ k-ft

$L_4 = \frac{198}{73.83} + \frac{396}{\left(\frac{73.83^2}{6}\right)} = \underline{3.12}$ k /ft of wall

∴ Three lanes governs. Use $\underline{\underline{3.98}}$ k/ft of wa for design.

SVERDRUP & PARCEL

JOB 9101 Flood Control District

COMPUTATIONS FOR 25th Ave Bridge @ ACOC

SHEET NO. 61 OF

DATE 12/84

BY CWB CHKD D.P.C.

Abutments

Earth Load

1. Load full height wall saturated condition (ACOC excavated)

$\gamma_{dry} = 120\ lb/ft^3$

$V_{solids} = \frac{120}{(2.65 \times 62.4)} = .73\ ft^3$

$V_{voids} = 1 - .73 = .27\ ft^3$

$w_{water} = .27 \times 62.4 = 16.8\ lb/ft^3$

$\gamma_{wet} = 136.8\ lb/ft^3$

Eq. Fluid Pressure $= 0.3 \times 136.8 = 41\ psf/ft$ (active)

Eq Fluid Pressure $= 350\ psf/ft$ (passive)

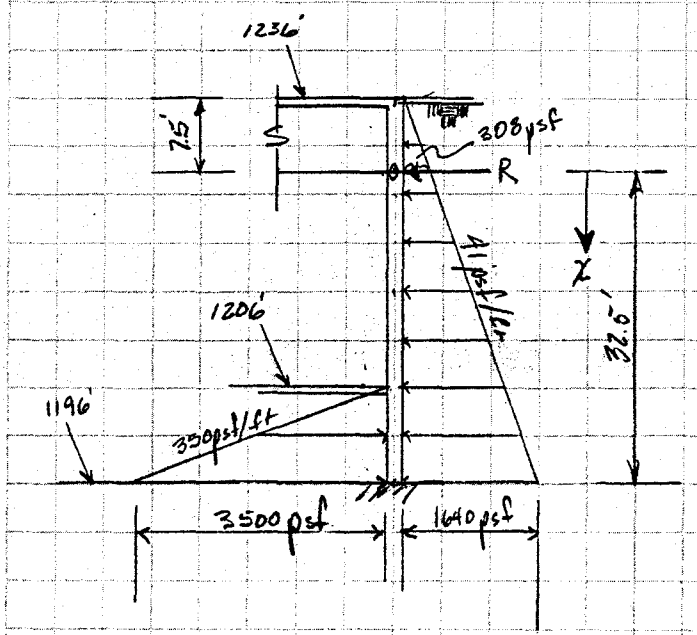

x	M	R
0	0	7.69 k
3.25'	23.1 k-ft	
6.50'	41.6	
9.75'	54.0	
13.00'	59.0	
16.25'	55.0	
19.50'	40.8	
22.75'	14.9	
26.00'	-21.6	
29.25'	-59.7	
32.50'	-88.8	6.46

SVERDRUP & PARCEL

JOB 9101 Flood Control District

COMPUTATIONS FOR 25TH Ave Bridge @ ACDC

SHEET NO. 62 OF

DATE 12/84

BY CJB CHKD D.P.C.

Abutments

Earth Load

2. Load full wall, strutted condition (ACDC excavated)

Eq. Fluid Pressure = 60 psf/ft upper 1/3 wall } (active)

Eq. Fluid Pressure = 35 psf/ft lower 2/3 wall }

Eq. Fluid Pressure = 350 psf/ft (passive)

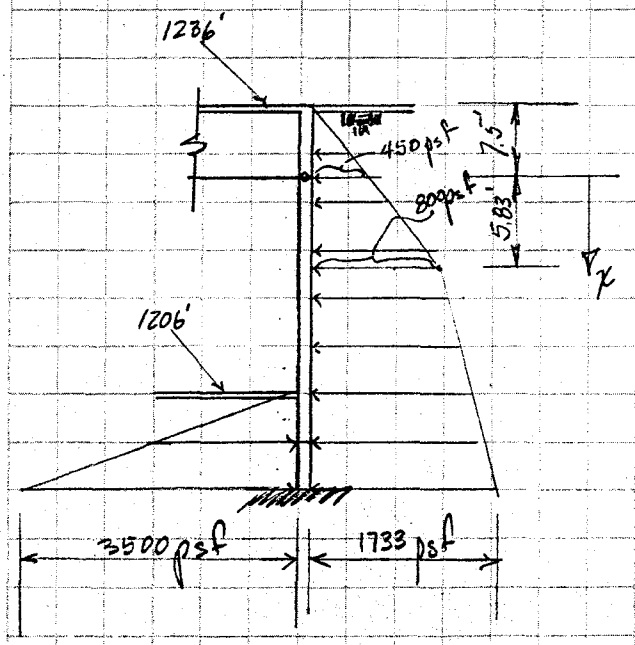

X	M	R
0	0	10.18K
3.25'	30.4 k-ft	
6.50	53.9	
9.75'	68.9	
13.0	73.4	
16.25'	67.8	
19.50	49.5	
22.75'	17.6	
26.00	-26.4	
29.25'	-73.5	
32.50	-112.6	9.74

SVERDRUP & PARCEL

JOB 9101 Flood Control District

COMPUTATIONS FOR 25TH Ave Bridge @ ACDC

SHEET NO. 63 OF

DATE 12/84

BY CJB CHKD R.P.C.

Abutments

Earth Load

3. Load part height wall, Full height backfill one side & part backfill far side.

Eq Fluid Pressure = 35 pcf/ft (active)

" " " = 350 pcf/ft (passive)

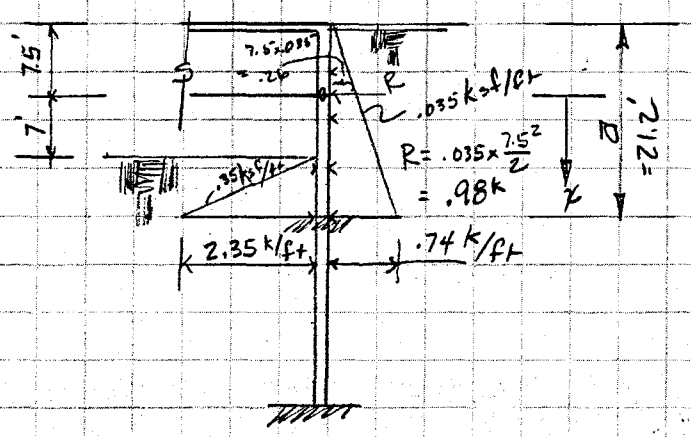

Compute a to find point of "0" V i.e. max moment

$\frac{1}{2}(.035a + .26)(a-7.5) + .98$

$= \frac{1}{2}(a-14.5)^2 \times .35$

$0 = 0.1575a^2 - 5.075a + 36.793$

$a = 21.2'$

X	M
0	0
1.37	-1.60 k-ft
2.74	-3.78
4.11	-6.63
5.48	-10.24
6.85	-14.69
8.22	-19.98
9.59	-25.50
10.96	-30.41
12.33	-33.94
13.70	-35.26

13.7

SVERDRUP & PARCEL

JOB 9101 Flood Control District

COMPUTATIONS FOR 25TH Ave Bridge @ ACDC

SHEET NO. 64 OF

DATE 12/84

BY CJB CHKD R.P.C.

Abutments

Hydrostatic Load

Design high water elevation = 1224'

Neglect passive resistance above 1206'

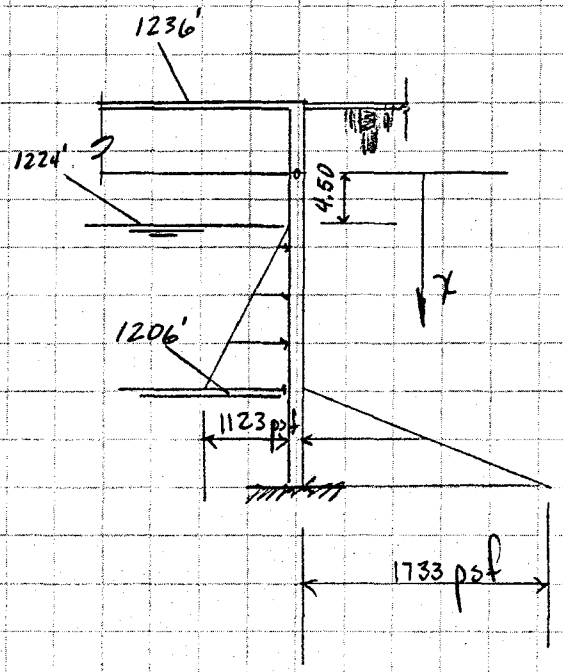

X	M	R
0	0	-3.00 k
3.25	-9.76 k-ft	
6.50	-19.44	
9.75	-27.78	
13.00	-32.66	
16.25	-31.94	
19.50	-23.48	
22.75	-5.17	
26.00	+16.68	
29.25	+32.12	
32.5	+35.21	-1.56 k

Note: This loading more critical than Earth Load #3

SVERDRUP & PARCEL

JOB 9101 Flood Control District

COMPUTATIONS FOR 25TH Ave Bridge @ ACDC

SHEET NO. 65 OF

DATE 12/84

BY CJB CHKD R.P.C.

Abutments

Wind Load (on superstructure = 50 psf) AASHTO 1.2.14 (B)

Wind Load (on substructure = 0 psf)

Height of superstructure = $\underset{\ell_{girder}}{6'} + \underset{\ell_{deck}}{.83'} + \underset{\ell_{parapet}}{4'} = 10.83'$

Load to abut = $\frac{112}{2} \times 10.83 \times .050 = 30.30^{K}$ (Transverse direction)

Moment @ top of Footing = $30.30 \times (39 - 6.33 + 10.83) = 1318$ k-ft

Stress in wall = $\frac{1318}{\left(\frac{73.83^2}{6}\right)} = \pm 1.45$ k/ft of wall

Wind Load on Live Load (WL)

$w = 100$ lb/ft AASHTO 1.2.14 (B)

Height of application = 12.83' (6' above deck)

Load to abut = $\frac{112}{2} \times 0.100 = 5.6^{K}$ (Transverse direction)

Moment @ top of Footing = $5.6(39 - 6.33 + 12.83) = 255$ k-ft

Stress in wall = $\frac{255}{\left(\frac{73.83^2}{6}\right)} = 0.28$ k/ft of wall

Note: Neglect longitudinal W & WL. These forces are resisted by passive resistance @ abutment

Longitudinal Force:

Note: Neglect same as wind forces

SVERDRUP & PARCEL

JOB 9101 Flood Control District

COMPUTATIONS FOR 25TH Ave Bridge @ ACDC

SHEET NO. 66 OF

DATE 12/84

BY CWB CHKD R.P.C.

Abutments

Rib Shortening & Temperature Fall

Take rib shortening strain = .0002 in/in — AASHTO 1.5.23

Take thermal coefficient = .000006 in/in/°F — AASHTO 1.5.23

Take thermal fall = 30°F from ambient

Worst Case for rib shortening & temp fall occurs with full height backfill @ abutments prior to excavation for channel.

Take point of fixity same as for earth load case #3.

$$\delta = \frac{112\times12}{2}\times .0002 + \frac{112\times12}{2}\times .000006\times 30 = 0.26'' \text{ @ top abut}$$

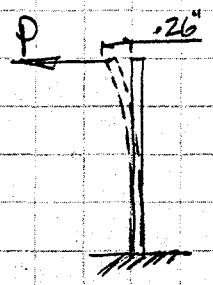

$$\delta = \frac{P\ell^3}{3EI}$$

$$\therefore P = \frac{3\delta EI}{\ell^3} = \frac{3\times .26\times 57\sqrt{3000}\times 24^3}{((21.2-7.5)12)^3} = 7.58\ k/ft$$

x	M
0	0
1.37	-10.38 k-ft
2.74	-20.76
4.11	-31.14
5.48	-41.52
6.85	-51.90
8.22	-62.28
9.59	-72.66
11.56	-88.01
12.33	-93.42
13.70	113.8 k-ft

SVERDRUP & PARCEL

JOB 9101 Flood Control District

COMPUTATIONS FOR 25TH Ave Bridge @ ACDC

SHEET NO. 67 OF

DATE 12/84

BY CJB CHKD D.P.C.

Abutments

Seismic Loading

Superstructure Mass (See Dead Load calculation)

$M_{FWS} = 2 \times 71.25^{k}/abut = 142.50^{k}$

$M_{CBS} = 2 \times 142^{k}/abut = 284^{k}$

$M_{slab} = 2 \times 411^{k}/abut = 822^{k}$

$M_{girder} = 2 \times 435^{k}/abut = 870^{k}$

$M_{abut\ dia} = 2 \times 126^{k}/abut = 252^{k}$

$M_{inter\ dia} = 2 \times 18^{k}/abut = 36^{k}$

$M_{wl} = 2 \times 11^{k}/abut = 22^{k}$

2428.50^{k} c.g. at 51.80 in above bottom of girder (See girder design)

Substructure Mass (See Dead Load calculation)

$M_{abut} = 2 \times 743 = 1486^{k}$

$$cg\ @\ \frac{39 \times 73.83 \times \frac{39}{2} - 6.33 \times 63.83 \times (39 - \frac{6.33}{2})}{39 \times 73.83 - 6.33 \times 63.83} = 16.83'$$ above footing

Structure Mass (W) $= 2428.50 + 1486 = 3914.5^{k}$ say 3920^{k}

c.g. Structure $= \left[2428.5\left(39 - 6.33 + \frac{51.8}{12}\right) + 1486 \times 16.83\right] \div 3914.5 = 29.33'$ above footing

SVERDRUP & PARCEL

JOB 9101 Flood Control District

COMPUTATIONS FOR 25TH Ave Bridge @ ACDC

SHEET NO. 68 OF

DATE 12/84

BY CJB CHKD R.P.C.

Abutments

Seismic Loading

Static Force Method per AASHTO 1.2.20(A)

depth to rock-like material = 11' to 80'

Zone 2 ⇒ A = 0.22 g

By inspection longitudinal seismic forces are resisted by passive soil resistance at the abutments. The period for structure vibration in the transverse direction is very short. Therefore from figure 1.2.20 (B) C = 0.12.

$EQ = 3920 \times 0.12/2 = 235$ k/abutment (transverse direction)

Moment @ top of footing = 235 × 29.33 = 6898 k-ft

Stress in wall = $\frac{6898}{\left(\frac{73.83^2}{6}\right)} = \pm 7.59$ k/ft

SVERDRUP & PARCEL

JOB 9101 Flood Control District

COMPUTATIONS FOR 25TH Ave Bridge @ ALDC

SHEET NO. 69 OF

DATE 12/84

BY CJB CHKD D.P.C.

Abutments

Group Loads per AASHTO 1.2.22

Group No	Load Combination	Load Reduction
I-1	D+L+E(2)	1/1
I-2	D+L+SF	1/1
II-1	D+E(2)+W	1/1.25
II-2	D+SF+W	1/1.25
III-1	D+L+E(2)+.3W+WL	1/1.25
III-2	D+L+SF+.3W+WL	1/1.25
IV	D+L+(R+S+T)	1/1.25
V	D+W+(R+S+T)	1/1.40
VI	D+L+.3W+WL+(R+S+T	1/1.40
VII	D+E(2)+EQ	1/1.33

Notes:

1. Groups II, III, V, VI not considered critical due to small increase in axial load compared to permitted load reduction for group action.
2. Earth loads and stream flow loads are not applied together because they are opposite sense and will not necessarily simultaneously.
3. Cases marked / thus "|" are the governing load cases.

Abutments

Group Loads

Multiply group axial loads & moments by 1/0.35 to reference to ultimate level. Reduce Group loads by appropriate reduction factor privious ly tabulated. Magnify moments (except R+S+T moments) by factor To account for slenderness.*

Stresses due to axial load:

$$P_{working} \times \frac{1}{.35} \times (\text{Load Reduction}) \times \frac{1}{A_g}$$

(12"x24")

Stresses due to moment:

$$M_{working} \times \frac{1}{.35} \times (\text{Load Reduction}) \times \frac{1}{A_g h} \times (\text{slenderness magnifier})$$

(12"x24"x24")

* AASHTO 1.5.28, 1.5.34

SVERDRUP & PARCEL

JOB 9101 Flood Control District

COMPUTATIONS FOR 25TH Ave Bridge @ ACDC

SHEET NO. 71 OF

DATE 12/84

BY CJB CHKD R.P.C.

Abutments

Slenderness per AASHTO 1.5.28

$$\delta = \frac{C_m}{1 - \frac{P_u}{\phi P_c}}$$

$C_m = 1.0$, $\phi = 1.0$

$P_u = 2.5 \times (26.5 + 3.6) = 75.25^K$

$$P_c = \frac{\pi^2 EI}{(K l_u)^2}$$

$K = 1.0$

$l_u = 22.5$ ft

$$P_c = \frac{\pi^2 \times 57\sqrt{3000} \times 24^3}{(22.5 \times 12)^2 \times 2.5} = 2337 \text{ K}$$

$$\delta = \frac{1}{1 - \frac{75}{2337}} = 1.03$$

SVERDRUP & PARCEL

JOB 9101 Flood Control District

COMPUTATIONS FOR 25TH Ave Bridge @ ACDC

Abutments

SHEET NO. 72 OF

DATE 12/84

BY GJB CHKD R.P.C.

Distance from hinge x (ft)	GROUP LOADS: Group I-1 P/Ag (ksi)	Group I-1 M/Agh (ksi)	Group I-1 ρg* %	Group I-2 P/Ag (ksi)	Group I-2 M/Agh (ksi)	Group I-2 ρg	Group IV P/Ag (ksi)	Group IV M/Agh	Group IV ρg* %	Group VII P/Ag (ksi)	Group VII M/Agh ksi	Group VII ρg* %	Stream side As req'd (in²)	Earth side As req'd (in²)
0	.30	0	1.0	.30	0	-1.0	.24	0		.25		1.0	1.44	1.44
1.37								-.04	-1.0					
2.74								-.08	-1.0					
3.25		+.16	1.0		-.05	-1.0					+.12	1.0	1.44	
4.11								-.13	-1.0					
5.48								-.17	-1.0					
6.50		+.28	1.5		-.10	-1.0					+.21	1.0	2.16	
6.85								-.21	-1.0					1.44
8.22								-.25	-1.3					1.87
9.59								-.30	-1.7					2.45
9.75		+.36	2.1		-.14	-1.0					+.26	1.4	3.02	
10.96								-.33	-2.0					2.88
12.33								-.38	-2.3					3.31
13.00		+.38	2.3		-.17	-1.0					+.28	1.6	3.31	

* ACI SP-17A Chart E3-40.75

Note: "+" denotes Tension on stream side face

SVERDRUP & PARCEL

JOB 9101 Flood Control District

COMPUTATIONS FOR 25TH Ave Bridge @ ALDC

Abutments

SHEET NO. 73 OF

DATE 12/84

BY GJB CHKD DPC

GROUP LOADS

Distance from hinge x (ft)	Group I-1 P/Ag (ksi)	Group I-1 M/Agh (ksi)	Group I-1 ρg %	Group I-2 P/Ag (ksi)	Group I-2 M/Agh (ksi)	Group I-2 ρg	Group II P/Ag (ksi)	Group II M/Agh	Group II ρg %	Group III P/Ag (ksi)	Group III M/Agh ksi	Group III ρg %	Stream side As req'd (in²)	Earth side As req'd (in²)
13.70	.30			.30			.24	-.42	-2.7	.25				3.89
16.25		+.35	2.0		-.16	-1.0			-2.1		+.26	1.4	2.88	3.02
19.50		+.25	1.2		-.12	-1.0		*	-1.6		+.19	1.0	1.73	2.30
22.75		+.09	1.0		-.03	-1.0			-1.0		+.07	1.0	1.44	1.44
26.00		-.13	-1.0		+.09	+1.0			-1.0		+.10	1.0		1.44
29.25		-.38	-2.3		+.16	+1.0			-1.0		-.28	-1.0		3.31
32.50		-.58	-4.5		+.18	+1.0			-1.0		-.43	1.0	1.44	6.48

* By interpolation assuming $\rho_g = 0$ at $x = 32.5'$

SVERDRUP & PARCEL

JOB 9101 Flood Control District

COMPUTATIONS FOR 25TH Ave Bridge @ ACDC

SHEET NO. 74 OF

DATE 12/84

BY CJB CHKD D.P.C.

Abutments

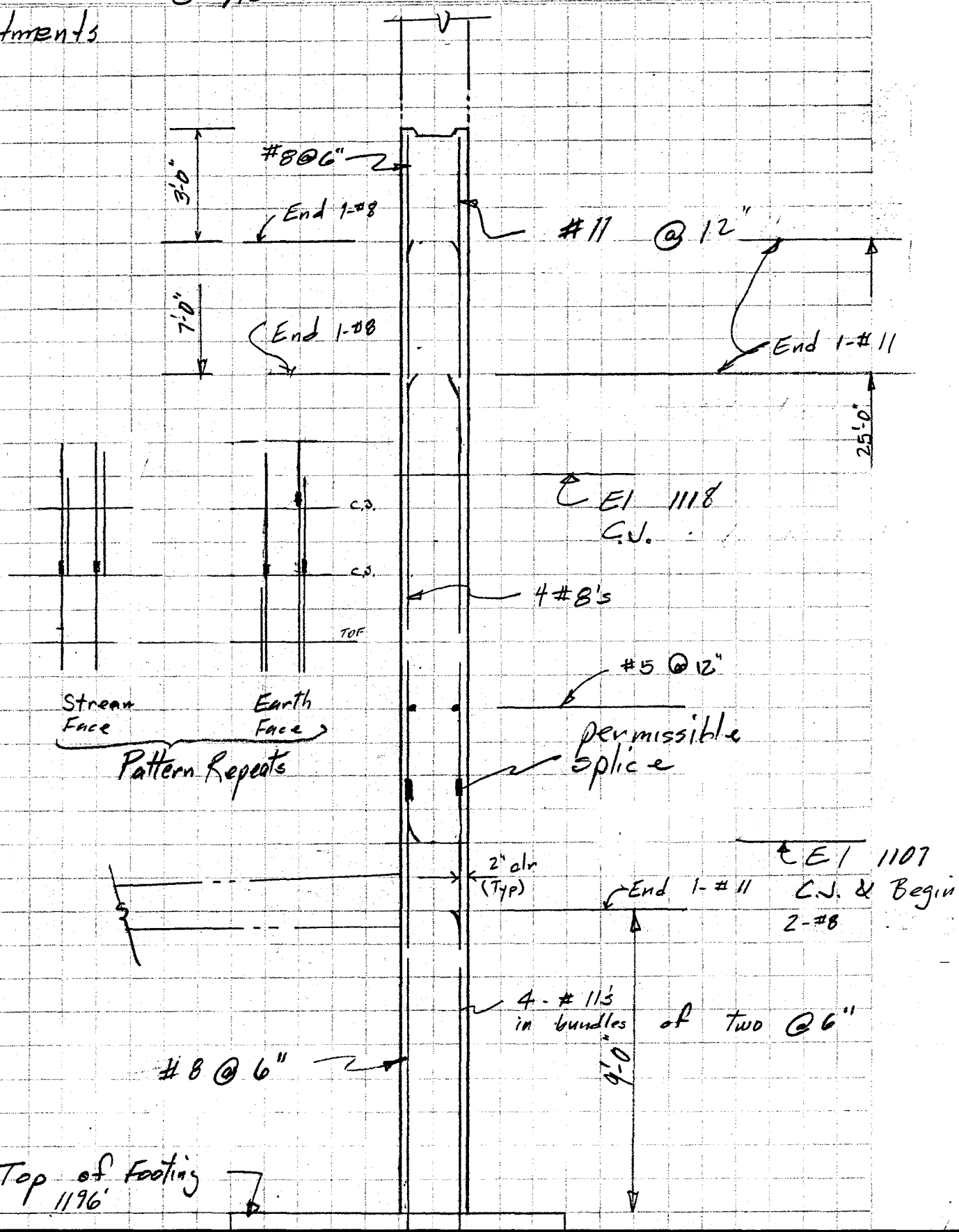

Abutments

Footing

Loading is Group I-1

Try this configuration :

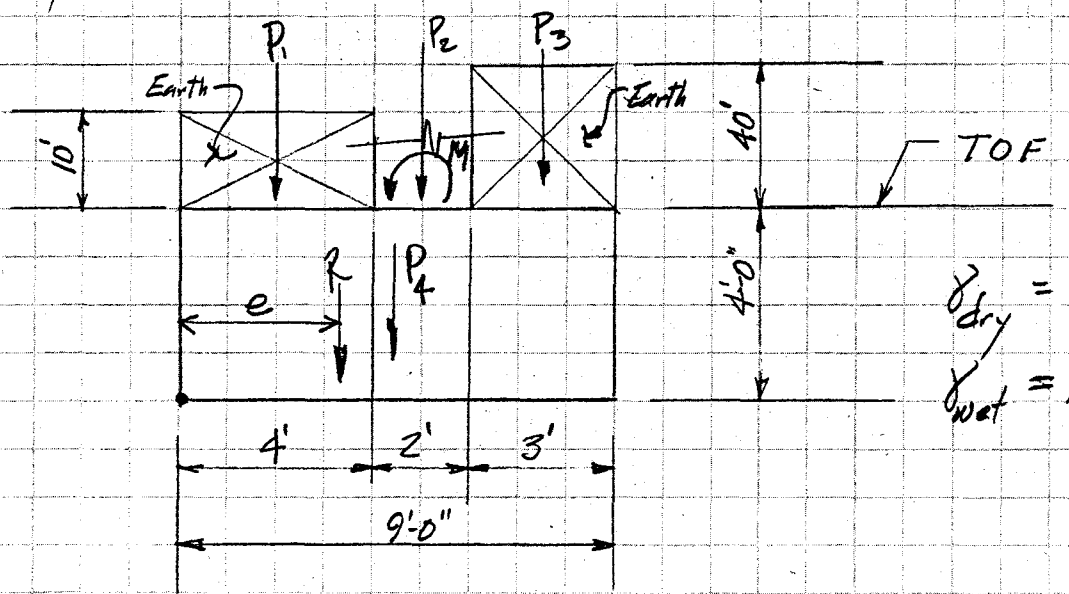

$\gamma_{dry} = 120\ lb/ft^3$

$\gamma_{wet} = 136.8\ lb/ft^3$

$P_1 = 10 \times 4 \times .1368 = 5.47\ K$, $P_3 = 40 \times 3 \times .1368 = 16.42\ K$

$P_2 = 26.5 + 3.62 = 30.12\ K$ (Dead + Live) , $P_4 = 9 \times 4 \times .15 = 5.40\ K$

$\sum_1^4 P_n = 57.41\ K$, $M = 112.6\ K\text{-}ft$

Determine location of resultant

$$e \times 57.41 = 2 \times 5.47 + 5 \times 30.12 + 7.5 \times 16.42 + 4.5 \times 5.40 - 112.6$$

$$= 196.39 \Rightarrow e = 3.42',\ e' = 4.5 - 3.42 = 1.08$$

$$\text{Soil Pressure} = \frac{57.41}{9} \pm \frac{1.08' \times 57.41}{\left(\frac{9^2}{6}\right)} = 10.97\ ksf,\ 1.79\ ksf$$

< 12 ksf allowable, OK per Soils Report

SVERDRUP & PARCEL

JOB 9101 Flood Control District

COMPUTATIONS FOR 25TH Ave Bridge @ ACDC

SHEET NO. 76 OF

DATE 12/84

BY CJB CHKD R.P.C.

Abutments

Footing

Frictional Resistance to Sliding = .4 × 57.41 = 22.96 k/ft of wall

> 9.74 k/ft of wall for Earth Load (2) O.K.

Reinforcing Steel, bottom

Span = 4'-0" (cantilever)

w = 10.97 ksf (neglect variation in load)

$M = \frac{10.97 \times 4^2}{2} = 87.76$ k-ft

Try #7's @ 12" alt with #8's @ 12"

$A_s = 1.39 \text{ in}^2/\text{ft}$, $n = 9$

$b = 12"$, $d = 48" - 3" - .5" = 44.5"$

$f_s = 18{,}205$ psi OK, $f_c = 488$ psi < 1200 psi OK

Reinforcing Steel, top

Span = 3'-0" (cantilever)

w = 40 × .1368 = 5.47 ksf (earth load neglecting soil pressure)

$M = \frac{5.47 \times 3^2}{2} = 24.62$ k-ft

SVERDRUP & PARCEL

JOB 9101 Flood Control District

COMPUTATIONS FOR 25TH Ave Bridge @ ACDC

SHEET NO. 77 OF

DATE 1/85

BY CWB CHKD R.P.C.

Abutments

Footing

Reinforing Steel, top

Try #5's @ 6"

$A_s = 0.62 \text{ in}^2/\text{ft}$, $n = 9$

$b = 12$, $d = 48" - 2" - .5" = 45.5"$

$f_s = 10{,}959$ psi OK , $f_c = 187$ psi OK

Check shear at d/2 from wall

$$V = 10.97 \times \left(4 - \frac{44.5}{2 \times 12}\right) = 23.54 \text{ k}$$

$$v = \frac{V}{b_w d} = \frac{23.54 \times 1000}{12 \times 44.5} = 44.1 \text{ psi}$$

$$V_c = .95 \times \sqrt{f'_c} = .95\sqrt{3000} = 52 \text{ psi} > 44.1 \text{ psi OK (AASHTO 1.5.25)}$$

Check I-1 without active earth pressure

Determine location of resultant

$$e \times 57.41 = 2 \times 5.47 + 5 \times 30.12 + 7.5 \times 16.42 + 4.5 \times 5.40 =$$

$$= 308.99 \Rightarrow e = 5.38' , e' = 5.38 - 4.5 = .88'$$

$$\text{Soil Pressure} = \frac{57.41}{9} \mp \frac{.88 \times 57.41}{\left(\frac{9^2}{6}\right)} = 2.64 \text{ ksf}, 10.12 \text{ ksf}$$

SVERDRUP & PARCEL

JOB 9101 Flood Control District

COMPUTATIONS FOR 25TH Ave Bridge @ ACDC

SHEET NO. 78 OF

DATE 1/85

BY CJB CHKD D.P.C.

Abutments

Footings

Check Group I-1 without active earth pressure

Reinforcing Steel, bottom

Span = 3'-0" (cantilever)

$w = 10.12$ ksf

$M = \frac{10.12 \times 3^2}{2} = 45.54$ k-ft/ft < 87.76 k-ft/ft OK

Check Group I-2

Check this configuration:

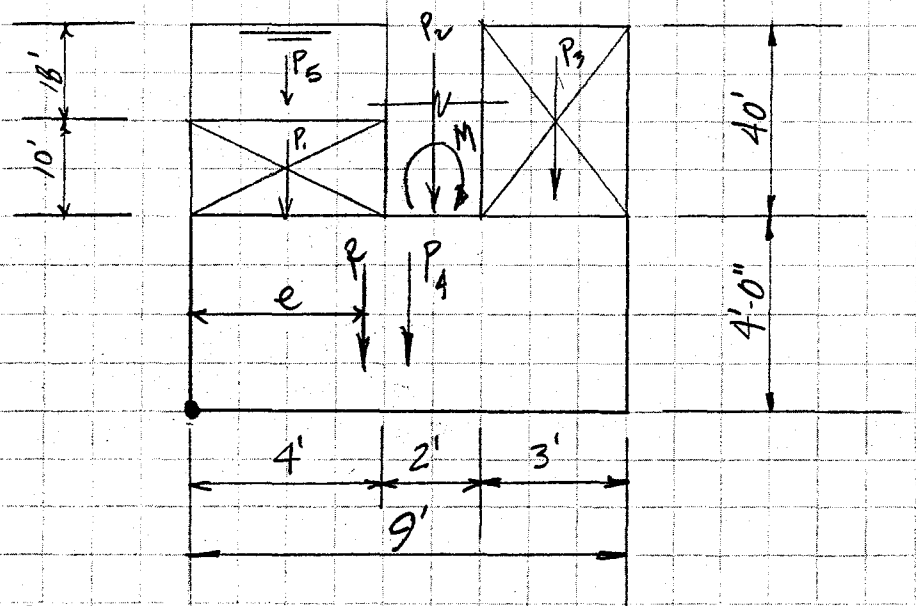

P_1 thru P_4 (see previous calc), M = 35.21 kft

$P_5 = 4 \times 18 \times .0622 = 4.48^K$

$\sum_1^5 = 57.41 + 4.48 = 61.89^K$

Abutments

Footings

Check Group I-2

Determine location of resultant R

$$e \times 61.89 = 2\times 5.47 + 5\times 30.12 + 7.5\times 16.42 + 4.5\times 5.4$$

$$+ 2\times 4.48 + 35.21 = 353.16 \text{ k-ft}$$

$$e = \frac{353.16}{61.89} = 5.71 \quad , \quad e' = 5.71 - 4.5 = 1.21'$$

$$\text{Soil Pressure} = \frac{61.89}{9} \mp \frac{1.21\times 61.89}{\left(\frac{9^2}{6}\right)} = 1.33 \text{ ksf}, \ 12.42 \text{ ksf}$$

Note that soil pressure is slightly over allowable, but say ok because:

1. Stream flow in channel at design high water elevation will occur infrequently.

2. Passive resistance of soil behind abutment has been neglected.

Reinforcing Steel, bottom

Span = 3'-0" (cantilever)

$w = 12.42$ ksf

$$M = \frac{12.42\times 3^2}{2} = 55.89 \text{ k-ft/ft} < 87.76 \text{ k-ft/ft} \quad \text{O.K.}$$

SVERDRUP & PARCEL

JOB 9101 Flood Control District

COMPUTATIONS FOR 25TH Ave Bridge @ ACDC

SHEET NO. 80 OF

DATE 1/85

BY CJB CHKD D.P.C.

Abutments

Footing

Check Group IV

By inspection footing OK for Group IV loads

Check Group VII

Try this configuration :

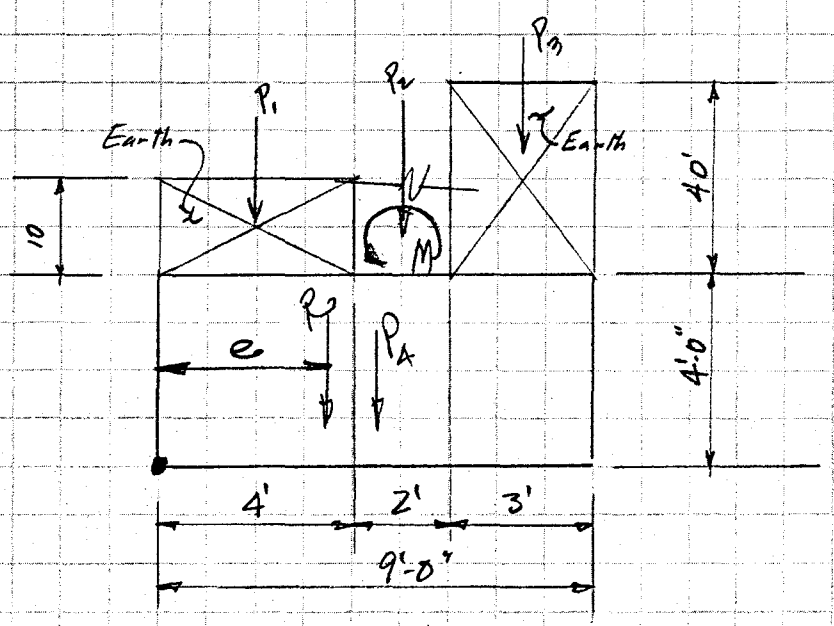

$P_1 = 10 \times 4 \times .1368 = 5.47^k$, $P_3 = 3 \times 40 \times .1368 = 16.42\ k$

$P_2 = 26.5 + 7.6 = 34.1^k$ (Dead + EQ) , $P_4 = 9 \times 4 \times .15 = 5.4\ k$

$\sum_1^4 P_n = R = 61.39\ k$, $M = 112.6\ k\text{-}f$

Determine location of resultant R

$e \times 61.39 = 2 \times 5.47 + 5 \times 34.1 + 7.5 \times 16.42 + 4.5 \times 5.40 - 112.6 = 216.29$

$e = 3.52$, $e' = 4.5 - 3.52 = .98'$

SVERDRUP & PARCEL

JOB 9101 Flood Control District

COMPUTATIONS FOR 25 TH Ave Bridge @ ACDC

SHEET NO. 81 OF

DATE 1/85

BY CJB CHKD D.P.C.

Abutments

Footing

Check Group VII

$$\text{Soil Pressure} = \frac{61.39}{9} \pm \frac{.98 \times 61.39}{\left(\frac{9^2}{6}\right)} = 11.28 \text{ ksf}, 2.36 \text{ ksf}$$

< 12 ksf OK

By inspection reinforcing assumed for footing OK

→ Use a 4'-0" thick × 9'-0" wide footing with #7's @ 12" alt w/ #8s @ 12" bottom and #5's @ 6" top. Offset stream side edge of footing 4' from face of abutment

SVERDRUP & PARCEL

JOB 9101 Flood Control District

COMPUTATIONS FOR 25TH Ave Bridge @ ACDC

SHEET NO. 82 OF

DATE 1/85

BY CJB CHKD D.P.C.

Abutment

End Diaphragm Connection to Abut Wall

Transfer abutment reaction due to earth load into end diaphragm via shear friction

Girder spacing = 9'-3"

Abut Reaction = V = 9.25' x 10.18^K = 94.17 k/girder

$\mu = 1.0$ (Concrete vs. Concrete) AASHTO 1.5.29

$$A_{vf\,req'd} = \frac{94.17 \times 1000}{1.0 \times 20{,}000} = 4.71 \text{ in}^2$$

→ Use 6 - #8's / girder , $A_{vf\,prov} = 6 \times .79 = 4.74 \text{ in}^2/\text{girder}$

SVERDRUP & PARCEL

JOB 9101 Flood Control District

COMPUTATIONS FOR 25TH Ave Bridge @ ACDC

SHEET NO. 83 OF

DATE 1/85

BY CJB CHKD D.P.C.

Detour Bridge

Use detour bridge similar to "Service Bridge" over Arizona Canal at 51ST Ave. Check new abutment for use of 3000 psi concrete.

Compute capacity of "Service Bridge" abutment cap based on $f'_c = 4000$ psi.

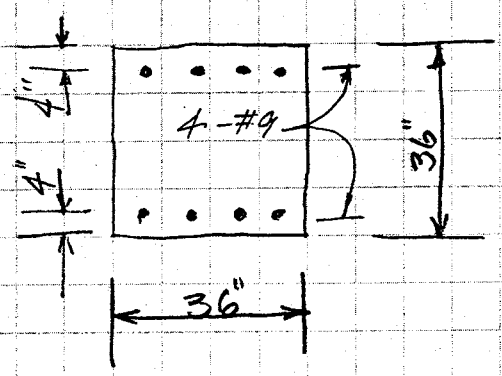

$f'_c = 4000$ psi, $n = 8$

$A_s = 4.00 \text{ in}^2$

$d = 32''$, $b = 36''$

By trial capacity based on working stress is $M = 198.43$ k-ft

Corresponding stresses are:

$f_s = 20{,}000$ psi

$f_c = 663$ psi

Corresponding stresses based on $f'_c = 3000$ psi are:

$f_s = 20{,}080$ psi
$f_c = 632$ psi

Say O.K. to slight overstress in steel and use "Service Bridge" design at 25TH Ave.

SVERDRUP & PARCEL

JOB 9101 Flood Control District SHEET NO. 84 OF

DATE 3/85

COMPUTATIONS FOR 25th Ave Bridge @ ACDC BY CVB CHKD JFF

Abutment

Supplemental Calculations

Determine req'd embedment for Earth Load #2

Use: 1. SF = 1.5 against movement at toe.

2. Friction plus passive pressure for resistance to sliding only.

3. COE Invert = 1206' for future channel invert.

4. Neglect resistance of COE invert slab.

FLOOD CONTROL DISTRICT
RECEIVED
MAR 05 '85

	CH ENG		HYDRO
	ASST		LMgt
	ADMIN		SUSP
	C & O		FILE
	ENGR		DESTROY
	FINANCE		
REMARKS			

Determine Friction Resistance available vs. height

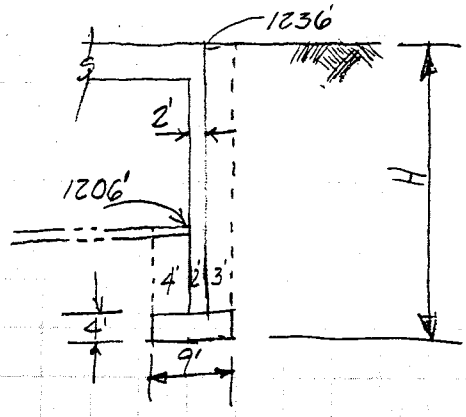

Compute DL+E @ Bot. of Ftg

Item	Wt
1. Superstr.	16.43 k/ft
2. Footing	5.40
3. Abt Wall	.26 H
4. Earth Side Earth	.36(H-4)
5. Str Side Earth	.48(H-34)
Total DL+E =	4.07+1.1 H

Friction Risistance = 0.4(4.07+1.1 H)

SVERDRUP & PARCEL

JOB 9101 Flood Control District

COMPUTATIONS FOR 25TH Ave Bridge @ ACDC

SHEET NO. 85 OF

DATE 3/85

BY CJB CHKD JFF

Abutment

Supplemental Calculations

Determine Resistance available vs. height

	H	DL+E	Available Friction 0.4(DL+E)	+ Available Passive @350 pcf/ft	= Total Resistance	Active	S.F.
	34	41.5K	16.6K	2.8K	19.4K	19.6K	.99
	35	42.6	17.0	4.3	21.3	20.8	1.02
	36	43.7	17.5	6.2	23.7	21.9	1.08
	37	44.8	17.9	8.5	26.4	23.1	1.14
	38	45.9	18.3	11.0	29.3	24.3	1.21
	39	47.0	18.8	13.9	32.7	25.6	1.28
	40	48.1	19.2	17.1	36.3	26.8	1.35
	41	49.2	19.7	20.6	40.3	28.1	1.43
Use →	42	50.3	20.1	24.5	44.6	29.5	1.51
	43	51.4	20.5	28.6	49.1	30.8	1.59
	44	52.5	21.0	33.1	54.1	32.2	

Above table based on load diagram shown on page 62 with "H" measured from Elev. 1236'.

Use this configuration for footing:

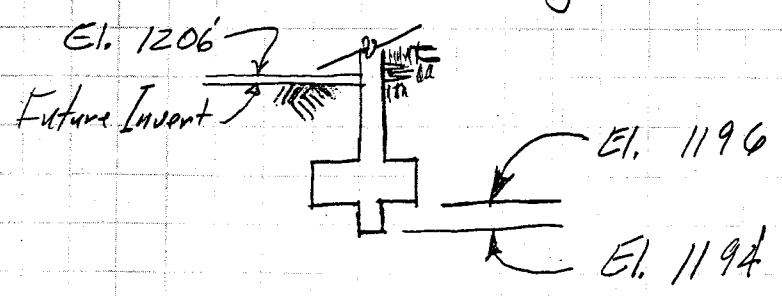

SVERDRUP & PARCEL

JOB 9101 Flood Control District — SHEET NO. 86 OF

DATE 3/85

COMPUTATIONS FOR 25TH Ave Bridge @ ACDC — BY CJB CHKD JFF

Abutment

Supplemental Calculations

Determine Stiffness of Wall

Compute I for cracked section

Average $A_s \approx 4\text{-}\#8's/ft = 4 \times .79 = 3.16\ in^2$ (Neglect A_s')

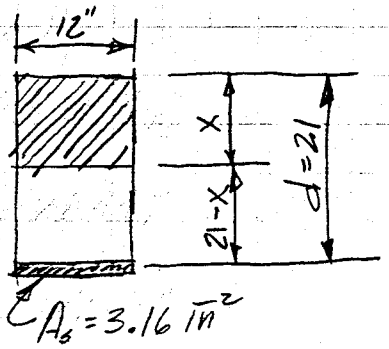

$A_t = 9 \times 3.16 = 28.44$

$$(12x)\frac{x}{2} = 28.44(21-x)$$

$$6x^2 = 597.24 - 28.44x$$

$$6x^2 + 28.44x - 597.24 = 0$$

$$x_1 = 7.89'',\ x_2 = -12.62''$$

$$I_{cr} = \tfrac{1}{3} \times 12 \times 7.89^3 + (21-7.89)^2 \times 28.44 = 6853\ in^4$$

$$K = M/\theta = \frac{3EI}{l} = \frac{3 \times 57\sqrt{3000} \times 6853}{(40-4-7.5)12} = 187{,}677\ in\text{-}k$$

$$K = 187{,}677 \times 1/12 = 15{,}640\ k\text{-}ft$$

Determine Stiffness of Footing on Soil

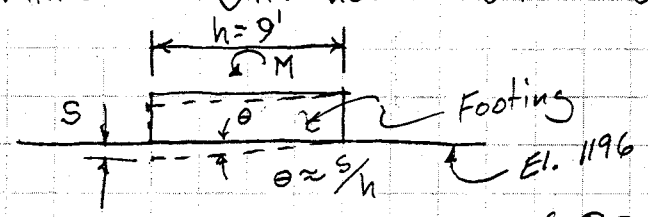

$$S = \frac{\sigma}{K} \quad \text{where} \begin{cases} \sigma = \dfrac{Mh}{2I} \\ K = \text{Subgrade Modulus} = 460\ K/ft^3 \end{cases}$$

(per Speedie)

$$S = \frac{Mh}{K2\left(\frac{1}{12}bh^3\right)} = \frac{6M}{Kbh^2}$$

$$\theta = \frac{6M}{Kbh^3}, \quad M/\theta = \frac{Kbh^3}{6}$$

p 4/4

Abutment

Supplemental Calculations

Determine Stiffness of Footing on Soil

$$M/\theta = k = \frac{Kbh^3}{6} \quad \text{for } k = 460^{k}/_{ft^3},\ b = 1',\ h = 9''$$

$$K = \frac{460 \times 1 \times 9^3}{6} = 55{,}890 \text{ k-ft}$$

Determine Distribution Factors (DF)

$$DF_{wall} = \frac{15{,}640}{15{,}640 + 55{,}890} = 0.22$$

$$DF_{Footing} = \frac{55{,}890}{15{,}640 + 55{,}890} = 0.78$$

Calculate F.E.M. for this load case

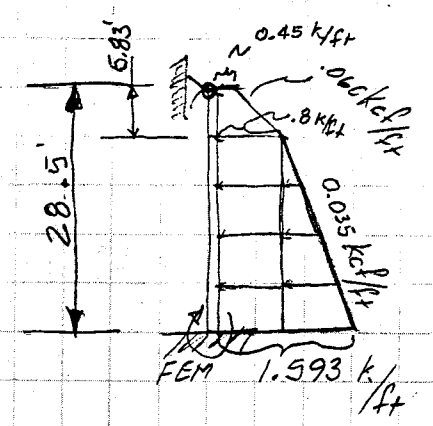

By calculator:

FEM = −114.05 k-ft

Distribute Moments to wall & footing thus:

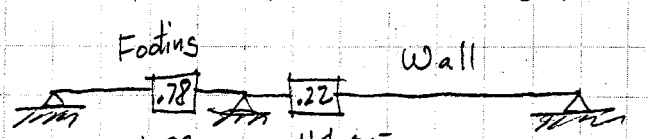

+89.0 −114.05
+25.09
−89.0

SVERDRUP & PARCEL

JOB 9101 Flood Control District

COMPUTATIONS FOR 25th Ave Bridge @ ACDC

SHEET NO. 88 OF

DATE 3/85

BY CJB CHKD JFF

Abutment

Supplemental Calculations

Calculate Moments along wall due to Earth Load #2

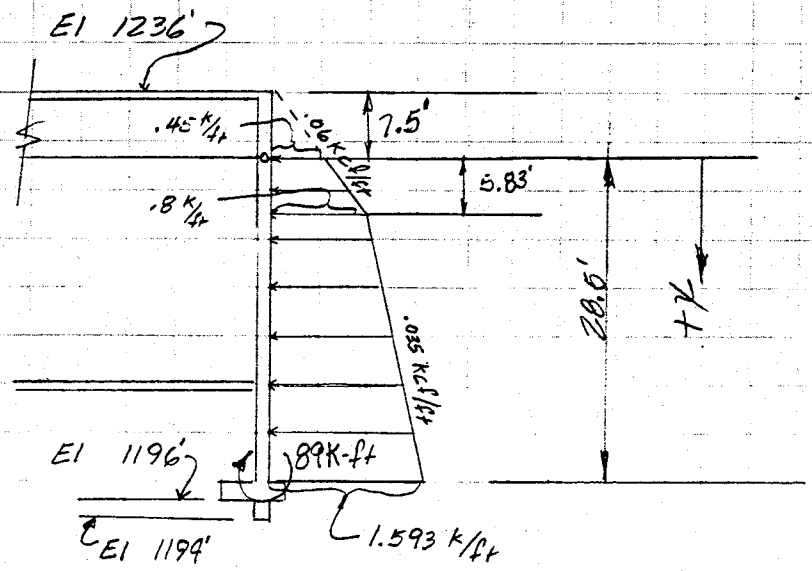

X	Moment
0.0 ft	0.0 k-ft
2.85	25.61
5.70	46.18
8.55	60.40
11.40	67.34
14.25	66.22
17.10	56.19
19.95	36.47
22.80	6.24
25.65	-33.31
28.50	-89.00

SVERDRUP & PARCEL

JOB 9101 Flood Control District

COMPUTATIONS FOR 25TH Ave Bridge @ ACDC

SHEET NO. 89 OF

DATE 3/85

BY CWB CHKD JFF

Abutment

Supplemental Calculations

Compare M-Diagram on page 62 with preceeding page.

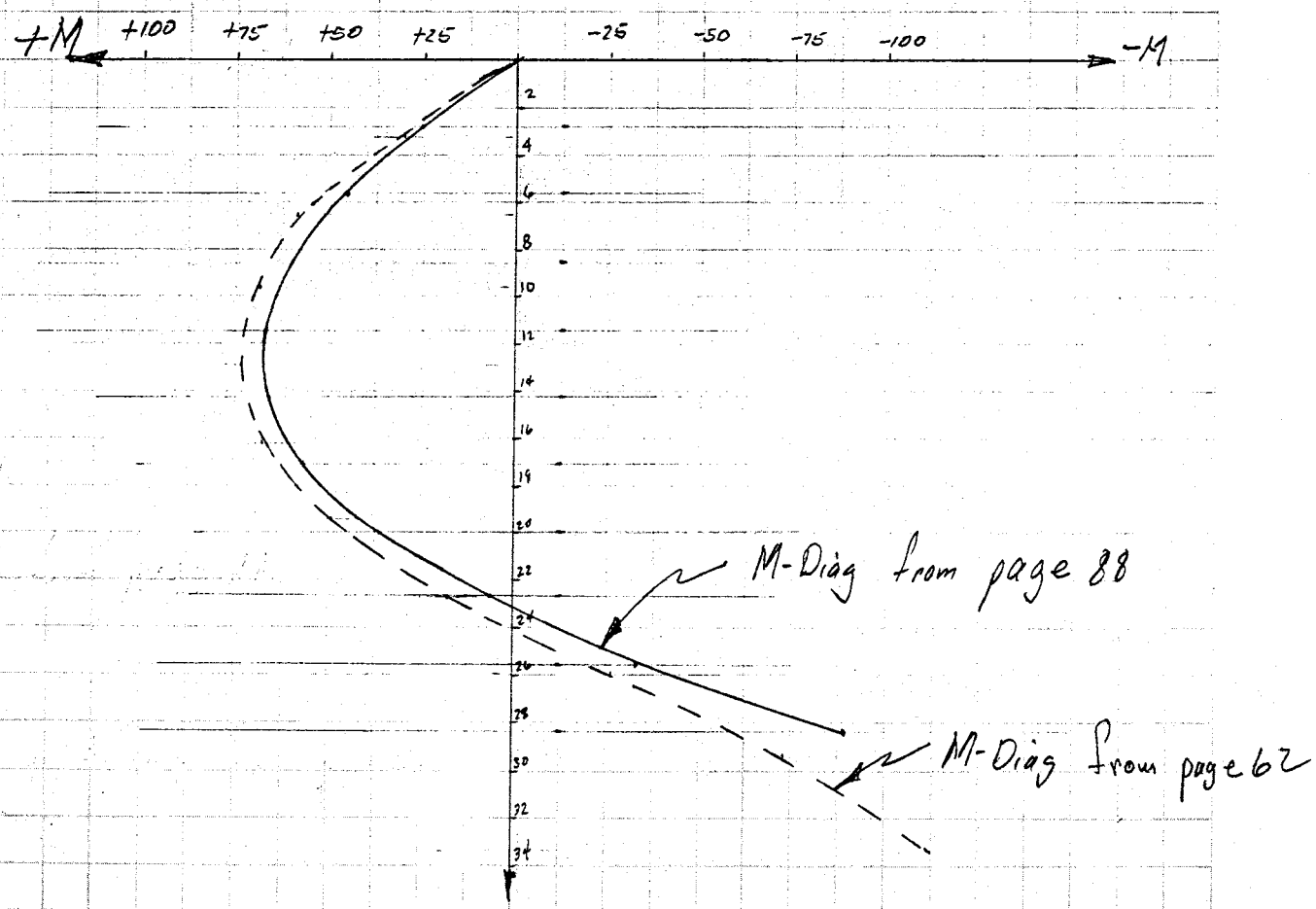

Conclusions: Design was based on M-Diag. from page 62 for "fixed" footing. M-Diag. from page 88 assumes rotation of footing based on soil stiffness. The rotation is a function of the soil modulus "K_y" (See Soils Report) which may vary slightly from that used in the analysis. Therefore say original design OK except raise footing and add shear key as noted on page 85.

SVERDRUP & PARCEL

JOB 9101 Flood Control District

COMPUTATIONS FOR 25TH Ave Bridge

SHEET NO. 90 OF

DATE 3/85

BY CJB CHKD JFF

Abutment

Supplemental Calculations

Shear Key

Check if extending stream face # 8 bars at 6"

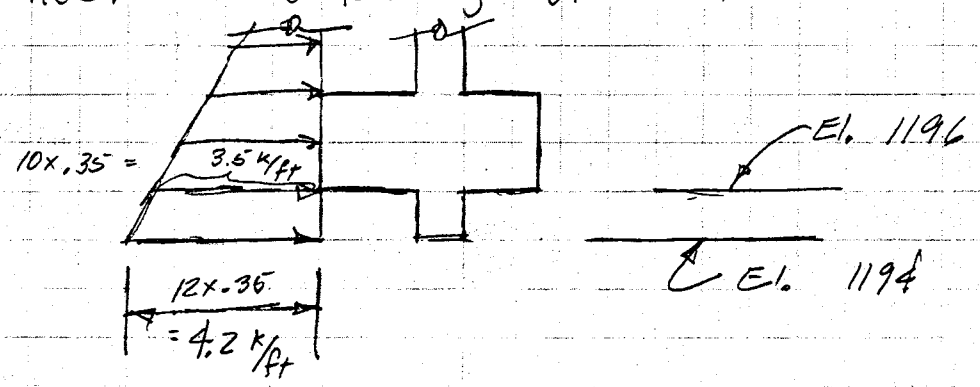

$V_{@\,Bot.\,Ftg} = \frac{1}{2}(3.5+4.2)\times 2 = 7.7\ k$

$v = \frac{V}{b_w d}$ $\quad b_w = 12"$, $d = 21"$

$= \frac{7700}{12\times 21} = 30$ psi OK

Take $M = 2\times 7.7 = 15.4$ k-ft (conservative)

$15.4 < 35.21$ k-ft

→ Extend # 8 bars into shear key

Check # 11 bars

Available Embedment length = 48" + 24" − 3" = 69"

ℓ_d for #11 = 68"

→ Extend # 11 bars into shear ke

SVERDRUP & PARCEL

JOB 9101 Flood Control District SHEET NO. 84 OF

DATE 3/85

COMPUTATIONS FOR 25TH Ave Bridge @ ACDC BY CJB CHKD JFF

Abutment

Supplemental Calculations

Determine req'd embedment for Earth Load #2

Use: 1. SF = 1.5 against movement at toe.

2. Friction plus passive pressure for resistance to sliding only.

3. COE Invert = 1206' for future channel invert.

4. Neglect resistance of COE invert slab.

FLOOD CONTROL DISTRICT
RECEIVED
MAR 05 '85

	CH ENG		HYDRO
	ASST		IM
	ADMIN		SUP
	C & O		FI
	ENGR		DES
	FINANCE		

REMARKS

Determine Friction Resistance available vs. height

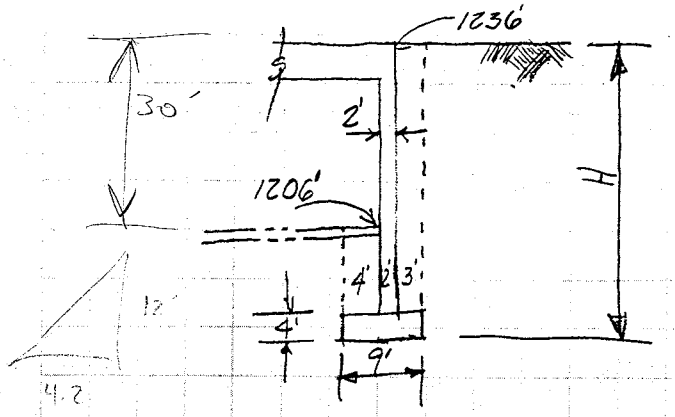

Compute DL+E @ Bot. of Ftg

Item	Wt
1. Superstr.	16.43 k/ft
2. Footing	5.40
3. Abt Wall	~~.26 H~~ 0.3(H-4)
4. Earth Side Earth	.36(H-4)
5. Str Side Earth	.48(H-34)
Total DL+E =	4.07+1.1 H
	2.87+ 1.14 H

Friction Resistance = 0.4(4.07+1.1 H)

SVERDRUP & PARCEL

JOB 9101 Flood Control District

COMPUTATIONS FOR 25th Ave Bridge @ ACDC

SHEET NO. 85 OF

DATE 3/85

BY CJB CHKD JFF

Abutment

Supplemental Calculations

Determine Resistance available vs. height

	H	DL+E	Available Friction 0.4(DL+E)	+ Available Passive @350 pcf/ft	= Total Resistance	Active	S.F.
	34	41.5K	16.6K	2.8K	19.4K	19.6K	.99
	35	42.6	17.0	4.3	21.3	20.8	1.02
	36	43.7	17.5	6.2	23.7	21.9	1.08
	37	44.8	17.9	8.5	26.4	23.1	1.14
	38	45.9	18.3	11.0	29.3	24.3	1.21
	39	47.0	18.8	13.9	32.7	25.6	1.28
	40	48.1	19.2	17.1	36.3	26.8	1.35
	41	49.2	19.7	20.6	40.3	28.1	1.43
Use →	42	50.3	20.1	24.5	44.6	29.5	1.51
	43	51.4	20.5	28.6	49.1	30.8	1.59
	44	52.5	21.0	33.1	54.1	32.2	

Above table based on load diagram shown on page 62 with "H" measured from Elev. 1236'.

Use this configuration for footing:

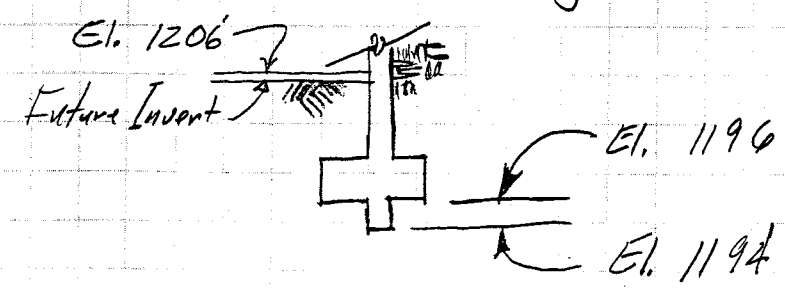

SVERDRUP & PARCEL

JOB 9101 Flood Control District

COMPUTATIONS FOR 25TH Ave Bridge @ ACDC

SHEET NO. 86 OF

DATE 3/85

BY CJB CHKD JFF

Abutment

Supplemental Calculations

Determine Stiffness of Wall

Compute I for cracked section

Average $A_s \approx 4\text{-}\#8's/ft = 4 \times .79 = 3.16\ in^2$
(Neglect A_s')

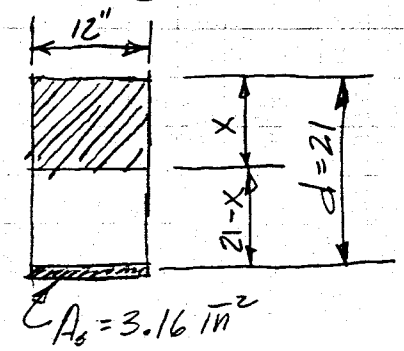

$A_t = 9 \times 3.16 = 28.44$

$$(12x)\frac{x}{2} = 28.44(21-x)$$

$$6x^2 = 597.24 - 28.44x$$

$$6x^2 + 28.44x - 597.24 = 0$$

$$x_1 = 7.89",\ x_2 = -12.62"$$

$$I_{cr} = \tfrac{1}{3} \times 12 \times 7.89^3 + (21-7.89)^2 \times 28.44 = 6853\ in^4$$

$$K = M/\theta = \frac{3EI}{l} = \frac{3 \times 57\sqrt{3000} \times 6853}{(40-4-7.5)12} = 187{,}677\ in\text{-}k$$

$$K = 187{,}677 \times 1/12 = 15{,}640\ k\text{-}ft$$

Determine Stiffness of Footing on Soil

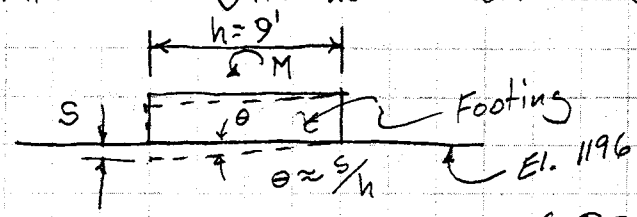

$$S = \frac{\sigma}{K} \quad \text{where} \begin{cases} \sigma = \frac{Mh}{2I} \\ K = \text{Subgrade Modulus} = 460\ K/ft^3 \text{ (per Speedie)} \end{cases}$$

$$S = \frac{Mh}{K2\left(\frac{1}{12}bh^3\right)} = \frac{6M}{Kbh^2}$$

$$\theta = \frac{6M}{Kbh^3}, \quad M/\theta = \frac{Kbh^3}{6}$$

p 4/4

SVERDRUP & PARCEL

JOB 9101 Flood Control District

COMPUTATIONS FOR 25TH Ave Bridge @ ACDC

SHEET NO. 87 OF

DATE 3/85

BY CJB CHKD JFF

Abutment

Supplemental Calculations

Determine Stiffness of Footing on Soil

$$M/\theta = k = \frac{Kbh^3}{6} \quad \text{for } k = 460^k/ft^3,\ b = 1',\ h = 9''$$

$$K = \frac{460 \times 1 \times 9^3}{6} = 55{,}890 \text{ k-ft}$$

Determine Distribution Factors (DF)

$$DF_{wall} = \frac{15{,}640}{15{,}640 + 55{,}890} = 0.22$$

$$DF_{Footing} = \frac{55{,}890}{15{,}640 + 55{,}890} = 0.78$$

Calculate F.E.M. for this load case

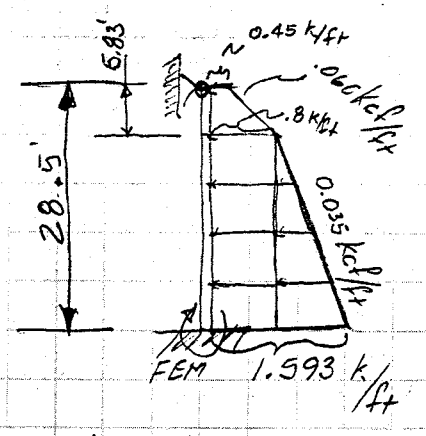

By calculator:

FEM = −114.05 k-ft

Distribute Moments to wall & footing thus:

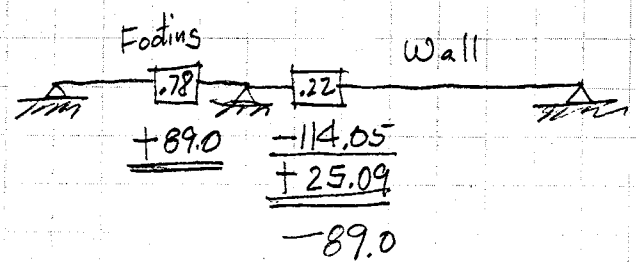

SVERDRUP & PARCEL

JOB 9101 Flood Control District

COMPUTATIONS FOR 25TH Ave Bridge @ ACDC

SHEET NO. 88 OF

DATE 3/85

BY CJB CHKD JFF

Abutment

Supplemental Calculations

Calculate Moments along wall due to Earth Load #2

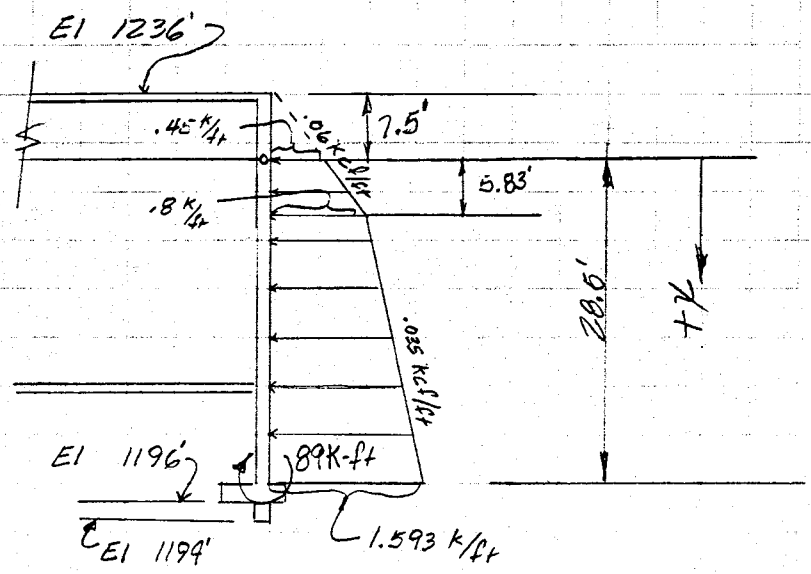

X	Moment
0.0 ft	0.0 k-ft
2.85	25.61
5.70	46.18
8.55	60.40
11.40	67.34
14.25	66.22
17.10	56.19
19.95	36.47
22.80	6.24
25.65	-33.31
28.50	-89.00

SVERDRUP & PARCEL

JOB 9101 Flood Control District

COMPUTATIONS FOR 25TH Ave Bridge @ ACDC

SHEET NO. 89 OF

DATE 3/85

BY CJB CHKD JFF

Abutment

Supplemental Calculations

Compare M-Diagram on page 62 with preceeding page

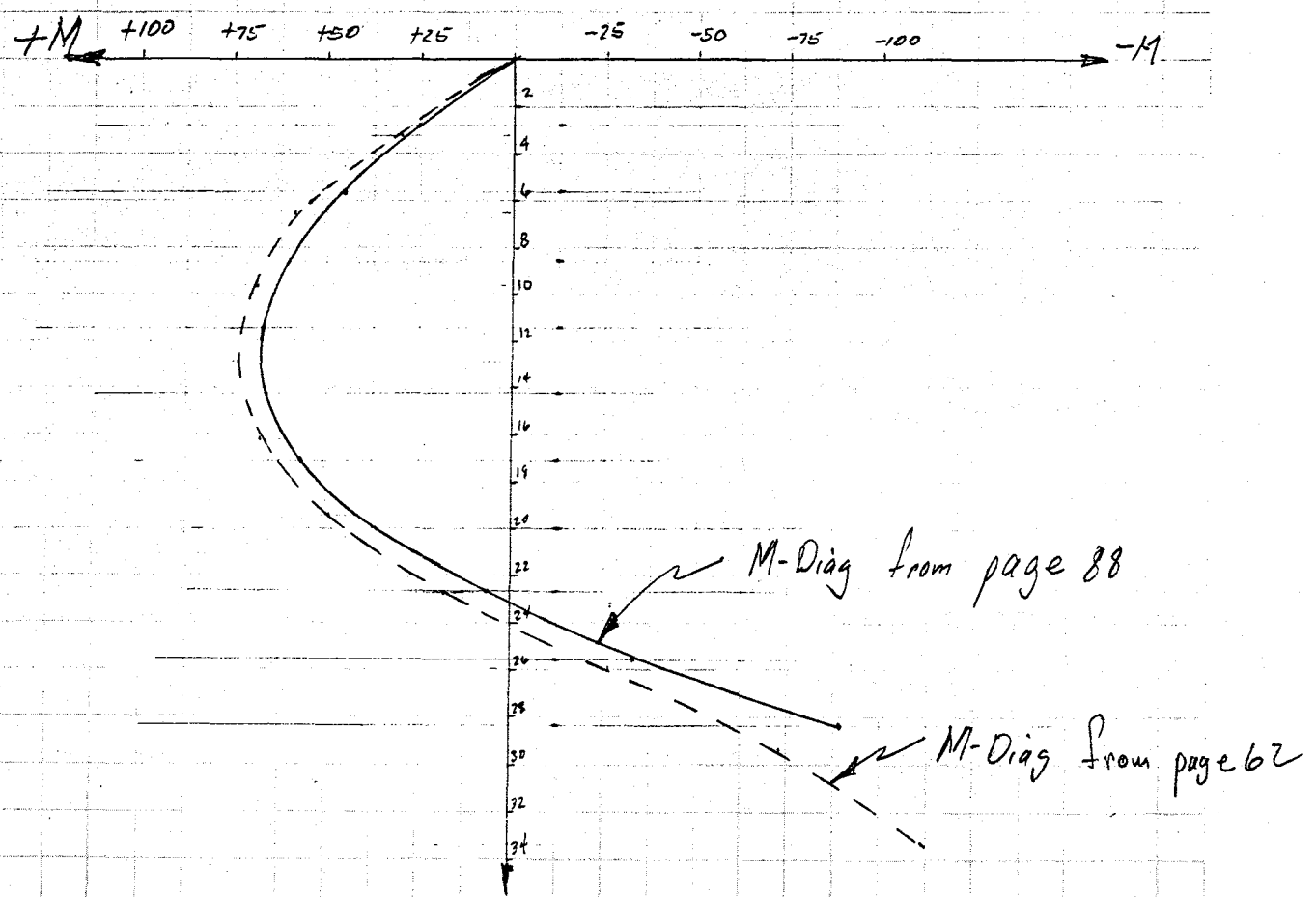

Conclusions: Design was based on M-Diag. from page 62 for "fixed" footing. M-Diag. from page 88 assumes rotation of footing based on soil stiffness. The rotation is a function of the soil modulus "K_w" (See Soils Report) which may vary slightly from that used in the analysis. Therefore say original design OK except raise footing and add shear key as noted on page 85.

SVERDRUP & PARCEL

JOB 9101 Flood Control District

COMPUTATIONS FOR 25TH Ave Bridge

SHEET NO. 90 OF

DATE 3/85

BY CJB CHKD JFF

Abutment

Supplemental Calculations

Shear Key

Check if extending stream face # 8 bars at 6"

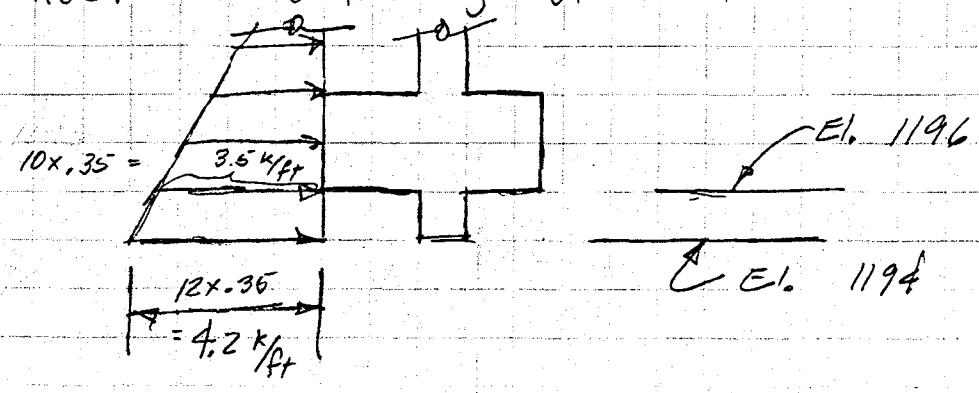

$V_{@\,Bot.\,Ftg} = \frac{1}{2}(3.5+4.2)\times 2 = 7.7\ k$

$v = \frac{V}{b_w d}$ $\quad b_w = 12"$, $d = 21"$

$= \frac{7700}{12\times 21} = 30$ psi OK

Take $M = 2\times 7.7 = 15.4$ k-ft (conservative)

$15.4 < 35.21$ k-ft

→ Extend # 8 bars into shear key

Check # 11 bars

Available Embedment length = 48" + 24" − 3" = 69"

ℓ_d for #11 = 68"

→ Extend # 11 bars into shear ke

SVERDRUP & PARCEL

JOB 9101 Flood Control District SHEET NO. 84 OF

DATE 3/85

COMPUTATIONS FOR 25th Ave Bridge @ ACDC BY CNB CHKD JFF

Abutment

Supplemental Calculations

Determine req'd embedment for Earth Load #2

Use: 1. SF = 1.5 against movement at toe.

2. Friction plus passive pressure for resistance to sliding only.

3. COE Invert = 1206' for future channel invert.

4. Neglect resistance of COE invert slab.

FLOOD CONTROL DISTRICT
RECEIVED
MAR 05 '85

	CH ENG		HYDRO
	ASST		LMgt
	ADMIN		SUSP
	C & O		FILE
	ENGR		DESTROY
	FINANCE		
REMARKS			

Determine Friction Resistance available vs. height

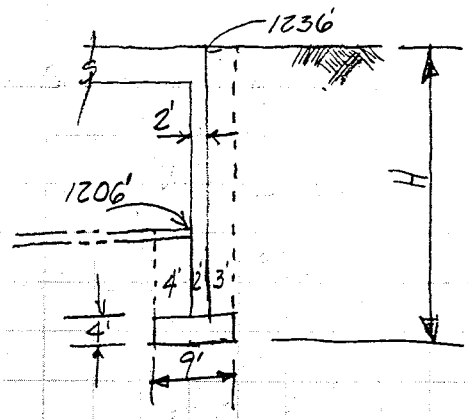

Compute DL+E @ Bot. of Ftg

Item	Wt
1. Superstr.	16.43 k/ft
2. Footing	5.40
3. Abt Wall	.26 H
4. Earth Side Earth	.36 (H-4)
5. Str Side Earth	.48 (H-34)
Total DL+E =	4.07 + 1.1 H

Friction Risistance = 0.4 (4.07 + 1.1 H)

SVERDRUP & PARCEL

JOB 9101 Flood Control District

COMPUTATIONS FOR 25TH Ave Bridge @ ACDC

SHEET NO. 85 OF

DATE 3/85

BY CJB CHKD JFF

Abutment

Supplemental Calculations

Determine Resistance available vs. height

H	DL+E	Available Friction 0.4(DL+E)	+ Available Passive @350 pcf/ft	= Total Resistance	Active	S.F.
34	41.5K	16.6K	2.8K	19.4K	19.6K	.99
35	42.6	17.0	4.3	21.3	20.8	1.02
36	43.7	17.5	6.2	23.7	21.9	1.08
37	44.8	17.9	8.5	26.4	23.1	1.14
38	45.9	18.3	11.0	29.3	24.3	1.21
39	47.0	18.8	13.9	32.7	25.6	1.28
40	48.1	19.2	17.1	36.3	26.8	1.35
41	49.2	19.7	20.6	40.3	28.1	1.43
Use → 42	50.3	20.1	24.5	44.6	29.5	1.51
43	51.4	20.5	28.6	49.1	30.8	1.59
44	52.5	21.0	33.1	54.1	32.2	

Above table based on load diagram shown on page 62 with "H" measured from Elev. 1236'.

Use this configuration for footing:

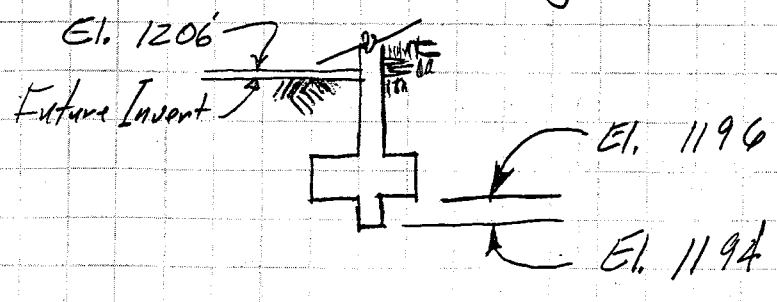

Abutment

Supplemental Calculations

Determine Stiffness of Wall

Compute I for cracked section

Average $A_s \approx 4\text{-}\#8's/ft = 4 \times .79 = 3.16\ in^2$ (Neglect A_s')

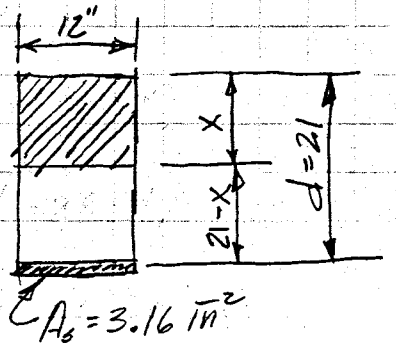

$A_t = 9 \times 3.16 = 28.44$

$$(12x)\frac{x}{2} = 28.44(21-x)$$

$$6x^2 = 597.24 - 28.44x$$

$$6x^2 + 28.44x - 597.24 = 0$$

$$x_1 = 7.89'',\ x_2 = -12.62''$$

$$I_{cr} = \tfrac{1}{3} \times 12 \times 7.89^3 + (21-7.89)^2 \times 28.44 = 6853\ in^4$$

$$K = M/\theta = \frac{3EI}{l} = \frac{3 \times 57\sqrt{3000} \times 6853}{(40-4-7.5)12} = 187{,}677\ in\text{-}k$$

$$K = 187{,}677 \times 1/12 = 15{,}640\ k\text{-}ft$$

Determine Stiffness of Footing on Soil

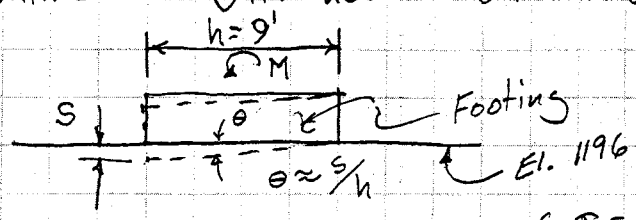

$$S = \frac{\sigma}{K} \quad \text{where} \begin{cases} \sigma = \dfrac{Mh}{2I} \\ K = \text{Subgrade Modulus} = 460\ K/ft^3 \text{ (per Speedie)} \end{cases}$$

$$S = \frac{Mh}{K2(\frac{1}{12}bh^3)} = \frac{6M}{Kbh^2}$$

$$\theta = \frac{6M}{Kbh^3}, \quad M/\theta = \frac{Kbh^3}{6}$$

p 4/4

SVERDRUP & PARCEL

JOB 9101 Flood Control District

COMPUTATIONS FOR 25TH Ave Bridge @ ACDC

SHEET NO. 87 OF

DATE 3/85

BY CJB CHKD JFF

Abutment

Supplemental Calculations

Determine Stiffness of Footing on Soil

$M/\theta = k = \frac{Kbh^3}{6}$ for $k = 460^k/ft^3$, $b = 1'$, $h = 9''$

$K = \frac{460 \times 1 \times 9^3}{6} = 55{,}890$ k-ft

Determine Distribution Factors (DF)

$DF_{wall} = \frac{15{,}640}{15{,}640 + 55{,}890} = 0.22$

$DF_{Footing} = \frac{55{,}890}{15{,}640 + 55{,}890} = 0.78$

Calculate F.E.M. for this load case

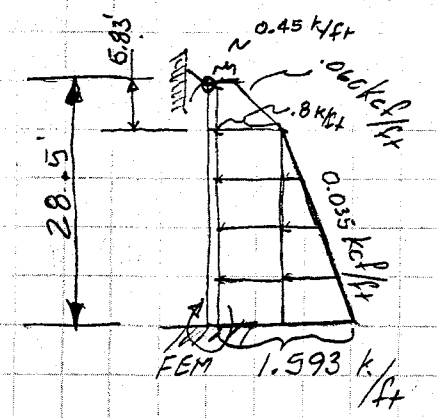

By calculator:

FEM = −114.05 k-ft

Distribute Moments to wall & footing thus:

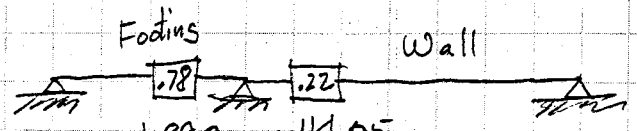

+89.0 −114.05

+25.09

−89.0

SVERDRUP & PARCEL

JOB 9101 Flood Control District

COMPUTATIONS FOR 25th Ave Bridge @ ACDC

SHEET NO. 88 OF

DATE 3/85

BY CJB CHKD JFF

Abutment

Supplemental Calculations

Calculate Moments along wall due to Earth Load #2

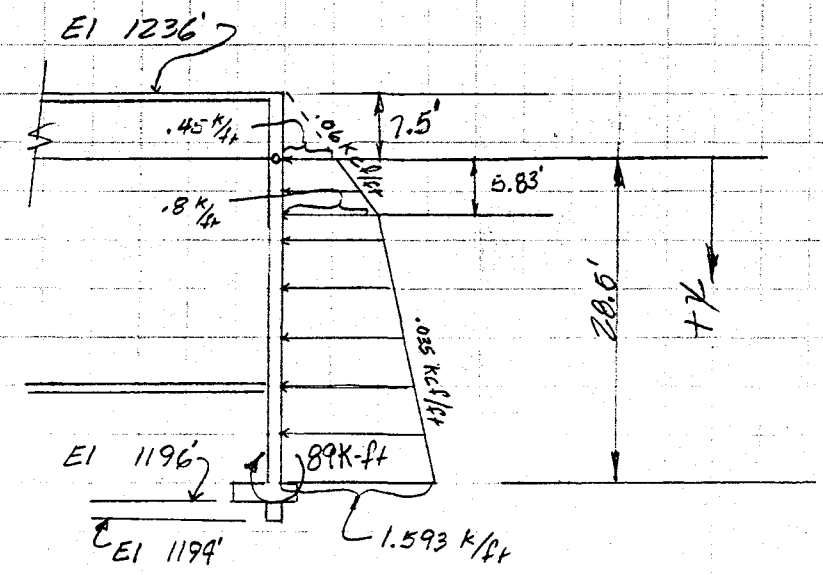

X	Moment
0.0 ft	0.0 k-ft
2.85	25.61
5.70	46.18
8.55	60.40
11.40	67.34
14.25	66.22
17.10	56.19
19.95	36.47
22.80	6.24
25.65	-33.31
28.50	-89.00

SVERDRUP & PARCEL

JOB 9101 Flood Control District

COMPUTATIONS FOR 25TH Ave Bridge @ ACDC

SHEET NO. 89 OF

DATE 3/85

BY CJB CHKD JFF

Abutment

Supplemental Calculations

Compare M-Diagram on page 62 with preceeding page.

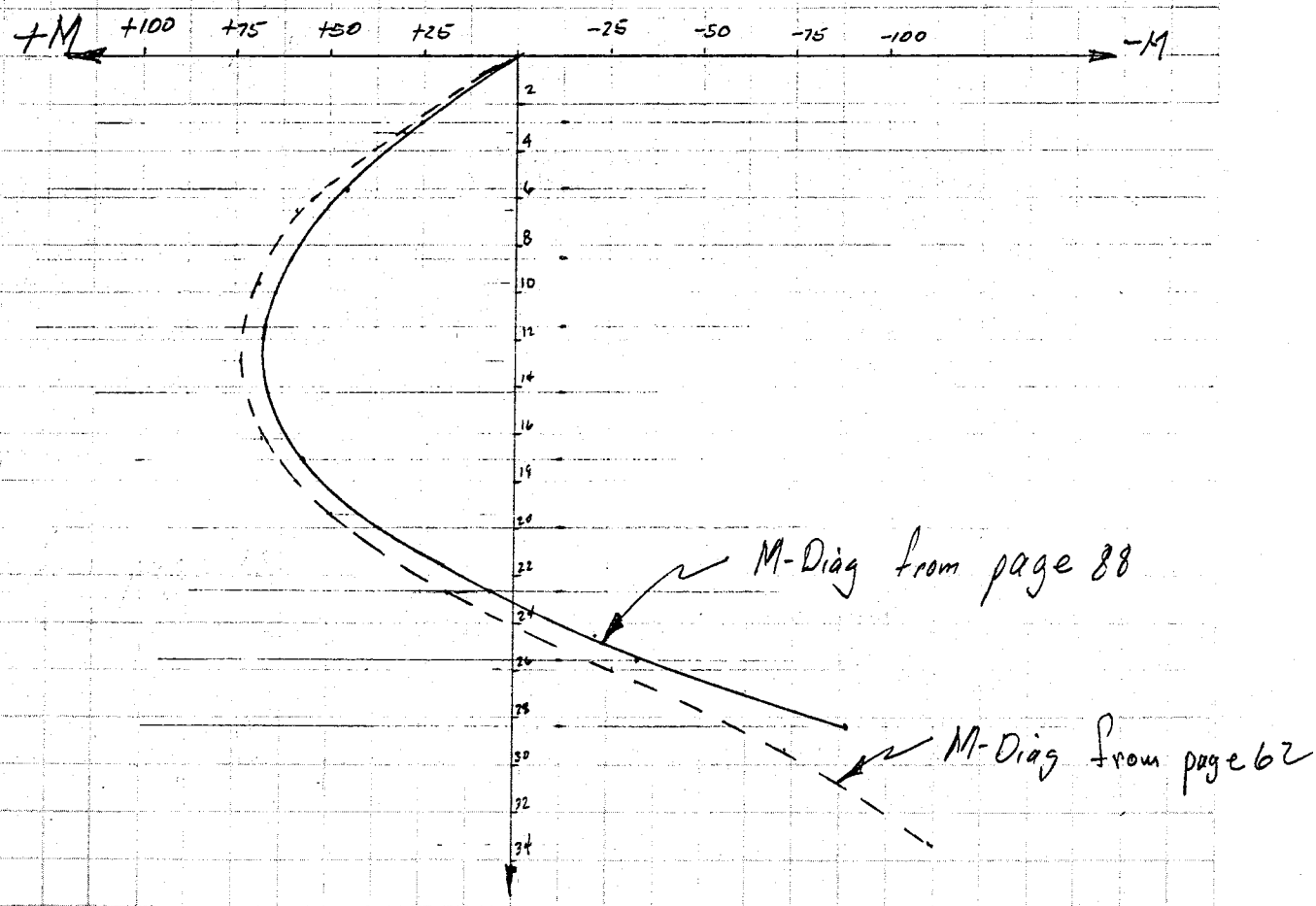

Conclusions: Design was based on M-Diag. from page 62 for "fixed" footing. M-Diag. from page 88 assumes rotation of footing based on soil stiffness. The rotation is a function of the soil modulus "K_v" (See Soils Report) which may vary slightly from that used in the analysis. Therefore say original design OK except raise footing and add shear key as noted on page 85.

SVERDRUP & PARCEL

JOB 9101 Flood Control District

COMPUTATIONS FOR 25TH Ave Bridge

SHEET NO. 90 OF

DATE 3/85

BY CJB CHKD JFF

Abutment

Supplemental Calculations

Shear Key

Check if extending stream face # 8 bars at 6"

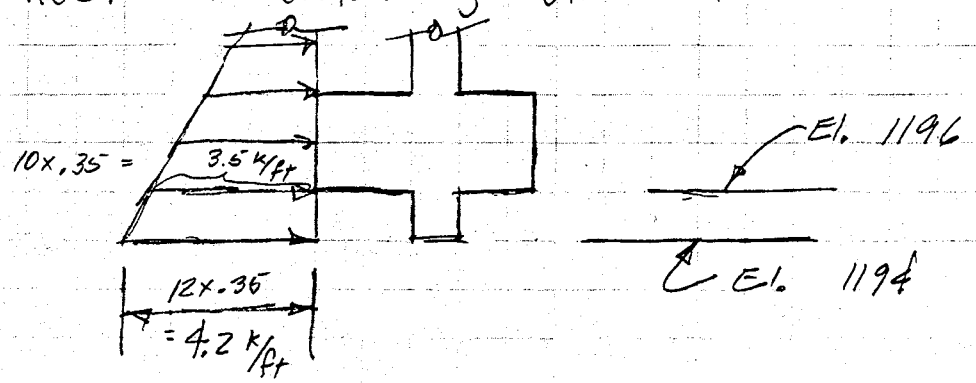

$V_{@\,Bot.\,Ftg} = \frac{1}{2}(3.5+4.2)\times 2 = 7.7\ k$

$v = \frac{V}{b_w d}$ $\quad b_w = 12"$, $d = 21"$

$= \frac{7700}{12\times 21} = 30$ psi OK

Take $M = 2\times 7.7 = 15.4$ k-ft (conservative)

$15.4 < 35.21$ k-ft

→ Extend # 8 bars into shear key

Check # 11 bars

Available Embedment length = 48" + 24" − 3" = 69"

l_d for #11 = 68"

→ Extend # 11 bars into shear ke