To: ACD(TS.B2)3.9

Quality • Integrity • Creativity • Responsiveness

RUST

Flood Control District of Maricopa
10th Street Wash Basin No. 2

Property of
Flood Control District of MC Library
Please Return to
2801 W. Durango
Phoenix, AZ 85009

Structural and Civil Design Calculations

Rust Environmei
& Infrastructure

Flood Control District of Maricopa
10th Street Wash Basin No. 2

Structural and Civil Design Calculations

Table of Contents **Page**

Structural Calculations

Retaining Walls N1-N5 & S1-S7 (along weir)	1 thru 42
Retaining Walls at Entrance E1-E3	43 thru 47
Channel Design	48 thru 53
Drop Inlet Structure Details	54 thru 66
Palma Park CBC Drop Structure	67 thru 77
Palma Park CBC Drop Inlet	78 thru 85
Palma Park Wall	86 & 87
Open Grid Flooring	88
Support Beam for Open Grid Flooring	89
Concrete Quantities	90 thru 97
Reinforcing Steel Quantities	98 thru 119
Structural Steel Quantities	120 & 121

Registered Professional Engineer (Civil) CERTIFICATE NO. 23184 DALE F SCHAUB Date Signed 10/07/26 ARIZONA, U.S.A.

Civil Calculations

Riprap Design	1 & 2
Double 60" RGRCP Class Design	3
Basin Drain RGRCP Class Design	4 & 5

Registered Professional Engineer (Civil) CERTIFICATE NO. 28940 FRANK E. HENDERSON III Date Signed ARIZONA, U.S.A.

STRUCTURAL CALCULATIONS

Rust E&I
Client FCDMC
Project 10th Street Wash
Subject Retaining Walls
Date 13-Nov-95 DS, Sbg 1/17/96 Retaining Wall N1 1 of 121

INPUT DATA

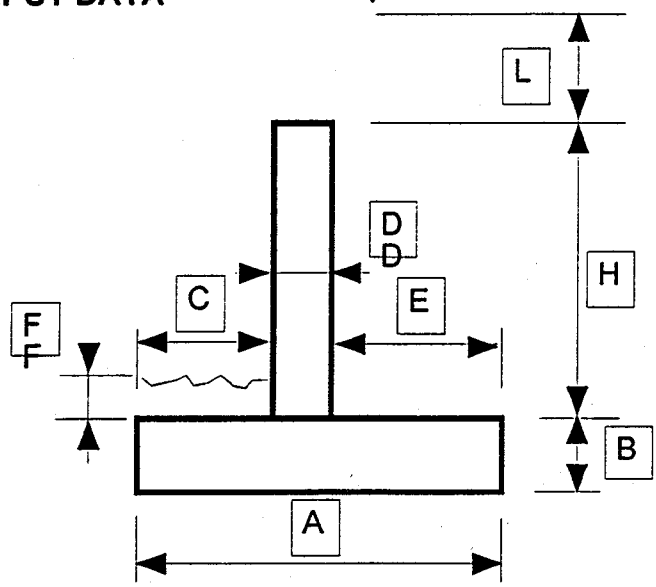

Unit Weight of Soil (PCF)	140
Unit Presure of Soil (PCF)	48

H=	9.020	Feet
A=	5.750	Feet
B=	1.250	Feet
C=	1.750	Feet
D=	1.000	Feet
E=	3.000	Feet
F=	5.420	Feet
L=	2.000	Feet

CASE I With Soil on the Front of Footing-With Live load

	Force	Arm	Moment
Footing	1.08	2.88	3.10
Stem	1.35	2.25	3.04
Fill in Front	1.33	0.88	1.16
Fill in Back	3.79	4.25	16.10
Live load			-3.91
Earth Presure			-8.67
	7.55		10.84

e= 1.44 B/6= 0.96

Pmax= 3284 PSF
Pmin= -659 PSF

CASE II Without Soil on the Front of Footing-With Live load

	Force	Arm	Moment
Footing	1.08	2.88	3.10
Stem	1.35	2.25	3.04
Fill in Front	0.00	0.88	0.00
Fill in Back	3.79	4.25	16.10
Live load			-3.91
Earth Presure			-8.67
	6.22		9.67

e= 1.32 B/6= 0.96

Pmax= 2571 PSF
Pmin= -408 PSF

CASE III With Soil on the Front of Footing-Without Live load

	Force	Arm	Moment
Footing	1.08	2.88	3.10
Stem	1.35	2.25	3.04
Fill in Front	1.33	0.88	1.16
Fill in Back	3.79	4.25	16.10
Live load			0.00
Earth Presure			-8.67
	7.55		14.74

e= 0.92 B/6= 0.96

Pmax= 2575 PSF
Pmin= 50 PSF

CASE IV Without Soil on the Front of Footing-Without Live load

	Force	Arm	Moment
Footing	1.08	2.88	3.10
Stem	1.35	2.25	3.04
Fill in Front	0.00	0.88	0.00
Fill in Back	3.79	4.25	16.10
Live load			0.00
Earth Presure			-8.67
	6.22		13.58

e= 0.69 B/6= 0.96

Pmax= 1862 PSF
Pmin= 301 PSF

Rust E&I
Client FCDMC
Project 10th Street Wash
Subject Retaining Walls
Date 13-Nov-95 OS, Hg 11/17/96 Retaining Wall N1 3 of 121

INPUT DATA

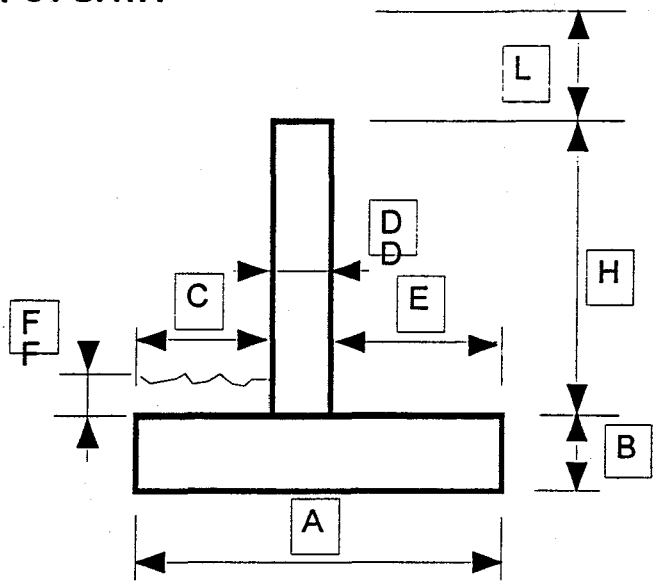

Unit Weight of Soil (PCF)	140
Unit Presure of Soil (PCF)	48

H=	9.020	Feet
A=	5.750	Feet
B=	1.250	Feet
C=	1.750	Feet
D=	1.000	Feet
E=	3.000	Feet
F=	6.020	Feet
L=	2.000	Feet

CASE I With Soil on the Front of Footing-With Live load

	Force	Arm	Moment
Footing	1.08	2.88	3.10
Stem	1.35	2.25	3.04
Fill in Front	1.47	0.88	1.29
Fill in Back	3.79	4.25	16.10
Live load			-3.91
Earth Presure			-8.67
	7.69		10.96

e= 1.45 B/6= 0.96

Pmax= 3363 PSF
Pmin= -687 PSF

CASE II Without Soil on the Front of Footing-With Live load

	Force	Arm	Moment
Footing	1.08	2.88	3.10
Stem	1.35	2.25	3.04
Fill in Front	0.00	0.88	0.00
Fill in Back	3.79	4.25	16.10
Live load			-3.91
Earth Presure			-8.67
	6.22		9.67

e= 1.32 B/6= 0.96

Pmax= 2571 PSF
Pmin= -408 PSF

CASE III With Soil on the Front of Footing-Without Live load

	Force	Arm	Moment
Footing	1.08	2.88	3.10
Stem	1.35	2.25	3.04
Fill in Front	1.47	0.88	1.29
Fill in Back	3.79	4.25	16.10
Live load			0.00
Earth Presure			-8.67
	7.69		14.87

e= 0.94 B/6= 0.96

Pmax= 2654 PSF
Pmin= 22 PSF

CASE IV Without Soil on the Front of Footing-Without Live load

	Force	Arm	Moment
Footing	1.08	2.88	3.10
Stem	1.35	2.25	3.04
Fill in Front	0.00	0.88	0.00
Fill in Back	3.79	4.25	16.10
Live load			0.00
Earth Presure			-8.67
	6.22		13.58

e= 0.69 B/6= 0.96

Pmax= 1862 PSF
Pmin= 301 PSF

Rust E&I
Client FCDMC
Project 10th Street Wash
Subject Retaining Walls
Date 13-Nov-95 OS, Sg 1/18/96 Retaining Wall N2 5 of 121

INPUT DATA

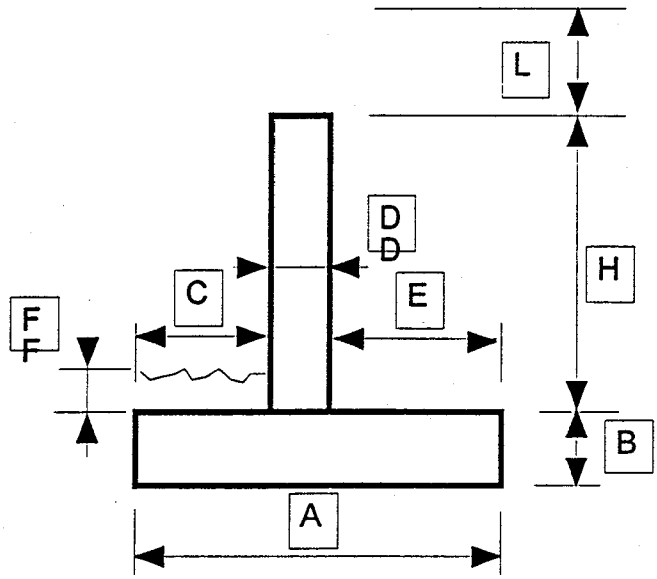

Unit Weight of Soil (PCF)	140
Unit Presure of Soil (PCF)	48

H=	8.720	Feet ✓
A=	5.500	Feet
B=	1.250	Feet
C=	1.750	Feet
D=	1.000	Feet
E=	2.750	Feet
F=	5.420	Feet ✓
L=	2.000	Feet

CASE I With Soil on the Front of Footing-With Live load

	Force	Arm	Moment
Footing	1.03	2.75	2.84
Stem	1.31	2.25	2.94
Fill in Front	1.33	0.88	1.16
Fill in Back	3.36	4.13	13.85
Live load			-3.65
Earth Presure			-7.93
	7.02		9.21

e= 1.44 B/6= 0.92

Pmax= 3282 PSF
Pmin= -727 PSF

CASE II Without Soil on the Front of Footing-With Live load

	Force	Arm	Moment
Footing	1.03	2.75	2.84
Stem	1.31	2.25	2.94
Fill in Front	0.00	0.88	0.00
Fill in Back	3.36	4.13	13.85
Live load			-3.65
Earth Presure			-7.93
	5.70		8.05

e= 1.34 B/6= 0.92

Pmax= 2546 PSF
Pmin= -475 PSF

CASE III With Soil on the Front of Footing-Without Live load

	Force	Arm	Moment
Footing	1.03	2.75	2.84
Stem	1.31	2.25	2.94
Fill in Front	1.33	0.88	1.16
Fill in Back	3.36	4.13	13.85
Live load			0.00
Earth Presure			-7.93
	7.02		12.86

e= 0.92 B/6= 0.92

Pmax= 2558 PSF
Pmin= -3 PSF

CASE IV Without Soil on the Front of Footing-Without Live load

	Force	Arm	Moment
Footing	1.03	2.75	2.84
Stem	1.31	2.25	2.94
Fill in Front	0.00	0.88	0.00
Fill in Back	3.36	4.13	13.85
Live load			0.00
Earth Presure			-7.93
	5.70		11.70

e= 0.70 B/6= 0.92

Pmax= 1822 PSF
Pmin= 249 PSF

Rust E&I
Client FCDMC
Project 10th Street Wash
Subject Retaining Walls
Date 13-Nov-95 OS, Sley 1/18/96 Retaining Wall N3 7 of 121

INPUT DATA

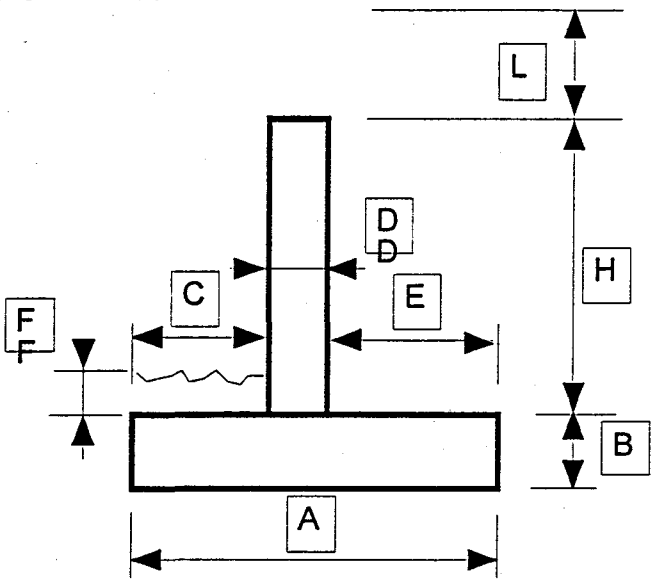

Unit Weight of Soil (PCF)	140
Unit Presure of Soil (PCF)	48

H=	8.427	Feet
A=	5.500	Feet
B=	1.250	Feet
C=	1.750	Feet
D=	1.000	Feet
E=	2.750	Feet
F=	5.420	Feet
L=	2.000	Feet

CASE I With Soil on the Front of Footing-With Live load

	Force	Arm	Moment
Footing	1.03	2.75	2.84
Stem	1.26	2.25	2.84
Fill in Front	1.33	0.88	1.16
Fill in Back	3.24	4.13	13.38
Live load			-3.41
Earth Presure			-7.25
	6.87		9.57

e= 1.36 B/6= 0.92

Pmax= 3097 PSF
Pmin= -600 PSF

CASE II Without Soil on the Front of Footing-With Live load

	Force	Arm	Moment
Footing	1.03	2.75	2.84
Stem	1.26	2.25	2.84
Fill in Front	0.00	0.88	0.00
Fill in Back	3.24	4.13	13.38
Live load			-3.41
Earth Presure			-7.25
	5.54		8.40

e= 1.23 B/6= 0.92

Pmax= 2362 PSF
Pmin= -347 PSF

CASE III With Soil on the Front of Footing-Without Live load

	Force	Arm	Moment
Footing	1.03	2.75	2.84
Stem	1.26	2.25	2.84
Fill in Front	1.33	0.88	1.16
Fill in Back	3.24	4.13	13.38
Live load			0.00
Earth Presure			-7.25
	6.87		12.98

e= 0.86 B/6= 0.92

Pmax= 2421 PSF
Pmin= 76 PSF

CASE IV Without Soil on the Front of Footing-Without Live load

	Force	Arm	Moment
Footing	1.03	2.75	2.84
Stem	1.26	2.25	2.84
Fill in Front	0.00	0.88	0.00
Fill in Back	3.24	4.13	13.38
Live load			0.00
Earth Presure			-7.25
	5.54		11.81

e= 0.62 B/6= 0.92

Pmax= 1686 PSF
Pmin= 329 PSF

Rust E&I
Client FCDMC
Project 10th Street Wash
Subject Retaining Walls
Date 13-Nov-95 BS, SLg 1/18/96 Retaining Wall N4 9 of 121

INPUT DATA

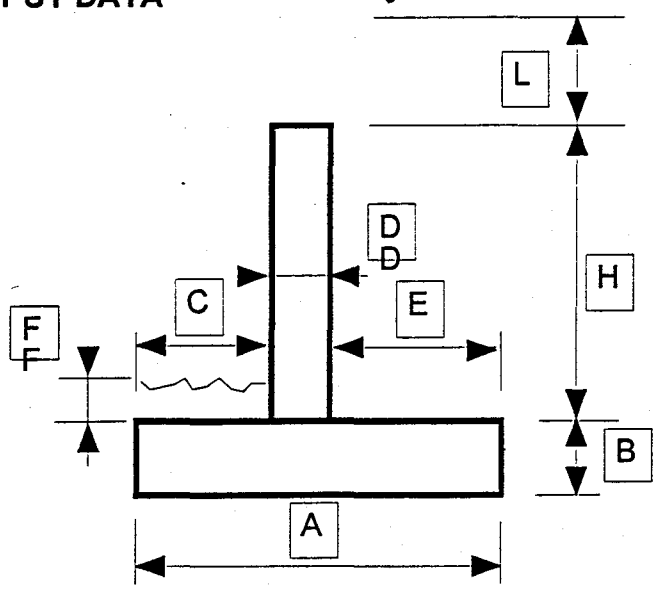

Unit Weight of Soil (PCF)	140
Unit Presure of Soil (PCF)	48

H=	8.230	Feet
A=	5.500	Feet
B=	1.167	Feet
C=	1.750	Feet
D=	1.000	Feet
E=	2.750	Feet
F=	5.500	Feet
L=	2.000	Feet

CASE I With Soil on the Front of Footing-With Live load

	Force	Arm	Moment
Footing	0.96	2.75	2.65
Stem	1.23	2.25	2.78
Fill in Front	1.35	0.88	1.18
Fill in Back	3.17	4.13	13.07
Live load			-3.25
Earth Presure			-6.64
	6.71		9.79

e= 1.29 B/6= 0.92

Pmax= 2942 PSF
Pmin= -500 PSF

CASE II Without Soil on the Front of Footing-With Live load

	Force	Arm	Moment
Footing	0.96	2.75	2.65
Stem	1.23	2.25	2.78
Fill in Front	0.00	0.88	0.00
Fill in Back	3.17	4.13	13.07
Live load			-3.25
Earth Presure			-6.64
	5.37		8.61

e= 1.15 B/6= 0.92

Pmax= 2195 PSF
Pmin= -244 PSF

CASE III With Soil on the Front of Footing-Without Live load

	Force	Arm	Moment
Footing	0.96	2.75	2.65
Stem	1.23	2.25	2.78
Fill in Front	1.35	0.88	1.18
Fill in Back	3.17	4.13	13.07
Live load			0.00
Earth Presure			-6.64
	6.71		13.04

e= 0.81 B/6= 0.92

Pmax= 2297 PSF
Pmin= 144 PSF

CASE IV Without Soil on the Front of Footing-Without Live load

	Force	Arm	Moment
Footing	0.96	2.75	2.65
Stem	1.23	2.25	2.78
Fill in Front	0.00	0.88	0.00
Fill in Back	3.17	4.13	13.07
Live load			0.00
Earth Presure			-6.64
	5.37		11.86

e= 0.54 B/6= 0.92

Pmax= 1551 PSF
Pmin= 401 PSF

	Rust E&I
Client	FCDMC
Project	10th Street Wash
Subject	Retaining Walls
Date	13-Nov-95 QS, slg 1/18/96

Retaining Wall N5 11 of 121

INPUT DATA

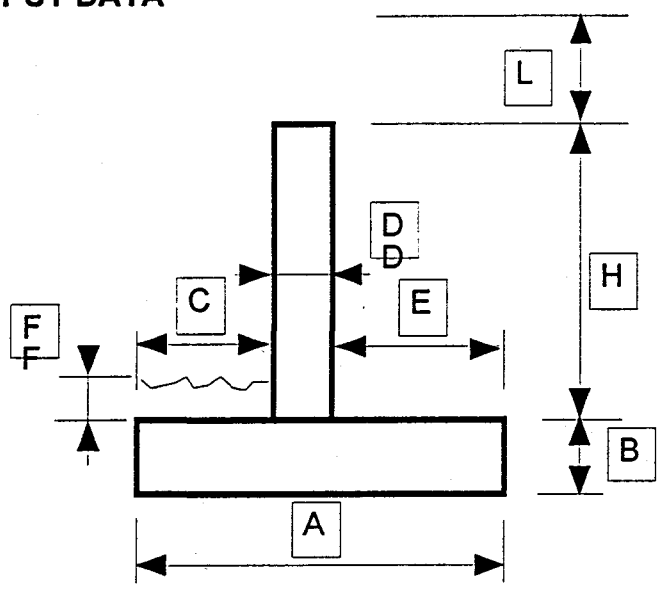

Unit Weight of Soil (PCF)	140
Unit Presure of Soil (PCF)	48

H=	5.500	Feet
A=	4.000	Feet
B=	1.000	Feet
C=	1.167	Feet
D=	1.000	Feet
E=	1.833	Feet
F=	2.500	Feet
L=	2.000	Feet

CASE I With Soil on the Front of Footing-With Live load

	Force	Arm	Moment
Footing	0.60	2.00	1.20
Stem	0.83	1.67	1.38
Fill in Front	0.41	0.58	0.24
Fill in Back	1.41	3.08	4.35
Live load			-1.45
Earth Presure			-2.20
	3.24		3.52

e=	0.92	B/6=	0.67

Pmax=	1926	PSF
Pmin=	-304	PSF

CASE II Without Soil on the Front of Footing-With Live load

	Force	Arm	Moment
Footing	0.60	2.00	1.20
Stem	0.83	1.67	1.38
Fill in Front	0.00	0.58	0.00
Fill in Back	1.41	3.08	4.35
Live load			-1.45
Earth Presure			-2.20
	2.84		3.28

e= 0.84 B/6= 0.67

Pmax= 1607 PSF
Pmin= -189 PSF

CASE III With Soil on the Front of Footing-Without Live load

	Force	Arm	Moment
Footing	0.60	2.00	1.20
Stem	0.83	1.67	1.38
Fill in Front	0.41	0.58	0.24
Fill in Back	1.41	3.08	4.35
Live load			0.00
Earth Presure			-2.20
	3.24		4.97

e= 0.47 B/6= 0.67

Pmax= 1382 PSF
Pmin= 241 PSF

CASE IV Without Soil on the Front of Footing-Without Live load

	Force	Arm	Moment
Footing	0.60	2.00	1.20
Stem	0.83	1.67	1.38
Fill in Front	0.00	0.58	0.00
Fill in Back	1.41	3.08	4.35
Live load			0.00
Earth Presure			-2.20
	2.84		4.73

e= 0.33 B/6= 0.67

Pmax= 1063 PSF
Pmin= 356 PSF

Rust E&I
Client FCDMC
Project 10th Street Wash
Subject Retaining Walls
Date 13-Nov-95 OS, 1/13/96 Retaining Wall S1 13 of 121

INPUT DATA

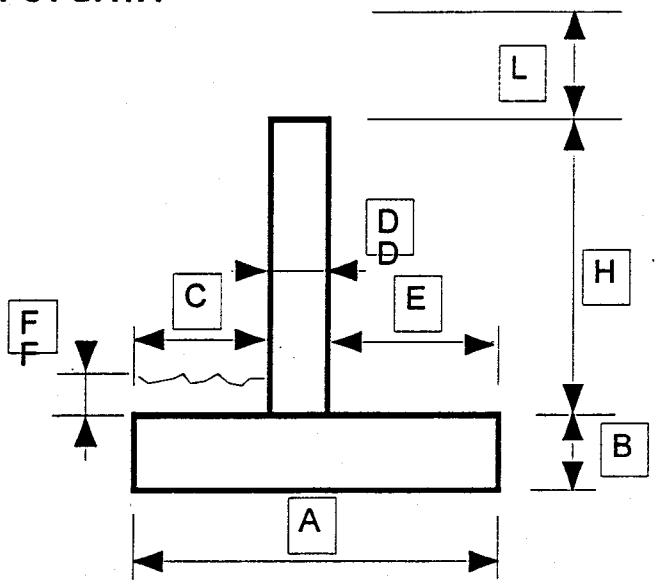

Unit Weight of Soil (PCF)	140
Unit Presure of Soil (PCF)	48

H=	9.420	Feet ✓
A=	7.000	Feet
B=	1.500	Feet
C=	2.000	Feet
D=	1.000	Feet
E=	4.000	Feet
F=	2.420	Feet ✓
L=	2.000	Feet

CASE I With Soil on the Front of Footing-With Live load

	Force	Arm	Moment
Footing	1.58 ✓	3.50 ✓	5.51 ✓
Stem	1.41 ✓	2.50	3.53 ✓
Fill in Front	0.68 ✓	1.00 ✓	0.68 ✓
Fill in Back	5.28 ✓	5.00 ✓	26.38 ✓
Live load			-4.26 } 5.72 o.k.
Earth Presure			-10.42 ✓
	8.94		21.42 19.96 o.k.

e= 1.10 ✓ 1.27 B/6= 1.17

Pmax= 2486 PSF ✓
Pmin= 69 PSF ✓

CASE II Without Soil on the Front of Footing-With Live load

	Force	Arm	Moment
Footing	1.58	3.50	5.51
Stem	1.41	2.50	3.53
Fill in Front	0.00	1.00	0.00
Fill in Back	5.28	5.00	26.38
Live load			-4.26
Earth Presure			-10.42
	8.26		20.74

e= 0.99 B/6= 1.17

Pmax= 2182 PSF
Pmin= 179 PSF

CASE III With Soil on the Front of Footing-Without Live load

	Force	Arm	Moment
Footing	1.58	3.50	5.51
Stem	1.41	2.50	3.53
Fill in Front	0.68	1.00	0.68
Fill in Back	5.28	5.00	26.38
Live load			0.00
Earth Presure			-10.42
	8.94		25.68

e= 0.63 B/6= 1.17

Pmax= 1964 PSF
Pmin= 590 PSF

CASE IV Without Soil on the Front of Footing-Without Live load

	Force	Arm	Moment
Footing	1.58	3.50	5.51
Stem	1.41	2.50	3.53
Fill in Front	0.00	1.00	0.00
Fill in Back	5.28	5.00	26.38
Live load			0.00
Earth Presure			-10.42
	8.26		25.00

e= 0.47 B/6= 1.17

Pmax= 1660 PSF
Pmin= 701 PSF

	Rust E&I
Client	FCDMC
Project	10th Street Wash
Subject	Retaining Walls
Date	13-Nov-95

Retaining Wall S1 15 of 121

INPUT DATA

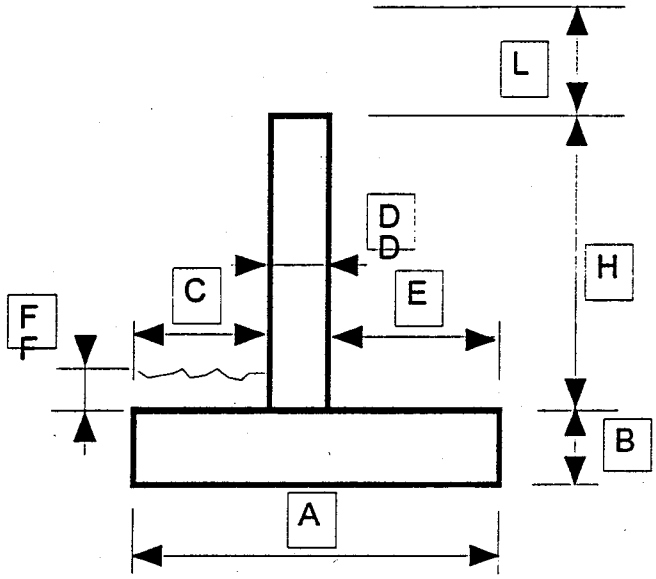

Unit Weight of Soil (PCF)	140
Unit Presure of Soil (PCF)	48

H=	9.420	Feet
A=	7.000	Feet
B=	1.500	Feet
C=	2.000	Feet
D=	1.000	Feet
E=	4.000	Feet
F=	5.420	Feet ?
L=	2.000	Feet

CASE I With Soil on the Front of Footing-With Live load

	Force	Arm	Moment
Footing	1.58	3.50	5.51
Stem	1.41	2.50	3.53
Fill in Front	1.52	1.00	1.52
Fill in Back	5.28	5.00	26.38
Live load			-4.26
Earth Presure			-10.42
	9.78		22.26

e=	1.22	B/6=	1.17

Pmax=	2863 PSF
Pmin=	-69 PSF

CASE II Without Soil on the Front of Footing-With Live load

	Force	Arm	Moment
Footing	1.58	3.50	5.51
Stem	1.41	2.50	3.53
Fill in Front	0.00	1.00	0.00
Fill in Back	5.28	5.00	26.38
Live load			-4.26
Earth Presure			-10.42
	8.26		20.74

e= 0.99 B/6= 1.17

Pmax= 2182 PSF
Pmin= 179 PSF

CASE III With Soil on the Front of Footing-Without Live load

	Force	Arm	Moment
Footing	1.58	3.50	5.51
Stem	1.41	2.50	3.53
Fill in Front	1.52	1.00	1.52
Fill in Back	5.28	5.00	26.38
Live load			0.00
Earth Presure			-10.42
	9.78		26.52

e= 0.79 B/6= 1.17

Pmax= 2342 PSF
Pmin= 453 PSF

CASE IV Without Soil on the Front of Footing-Without Live load

	Force	Arm	Moment
Footing	1.58	3.50	5.51
Stem	1.41	2.50	3.53
Fill in Front	0.00	1.00	0.00
Fill in Back	5.28	5.00	26.38
Live load			0.00
Earth Presure			-10.42
	8.26		25.00

e= 0.47 B/6= 1.17

Pmax= 1660 PSF
Pmin= 701 PSF

	Rust E&I
Client	FCDMC
Project	10th Street Wash
Subject	Retaining Walls
Date	13-Nov-95 1/18/96

Retaining Wall S1 17 of 121

INPUT DATA

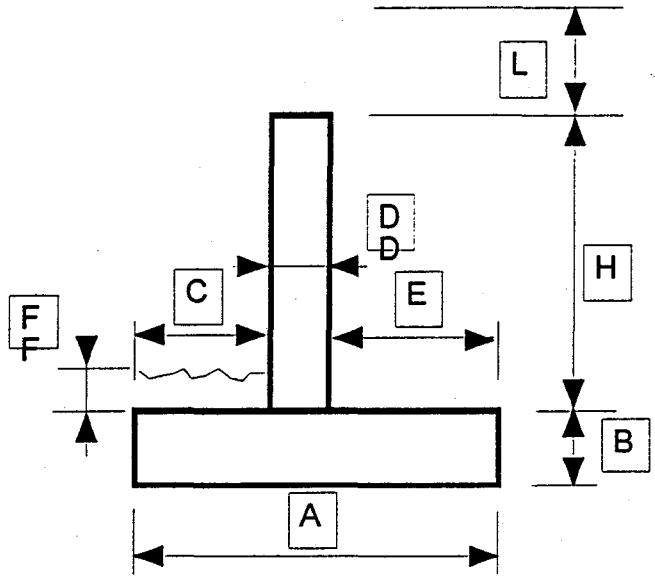

Unit Weight of Soil (PCF)	140
Unit Presure of Soil (PCF)	48

H=	9.420	Feet
A=	7.000	Feet
B=	1.500	Feet
C=	2.000	Feet
D=	1.000	Feet
E=	4.000	Feet
F=	5.720	Feet
L=	2.000	Feet

CASE I With Soil on the Front of Footing-With Live load

	Force	Arm	Moment
Footing	1.58	3.50	5.51
Stem	1.41	2.50	3.53
Fill in Front	1.60	1.00	1.60
Fill in Back	5.28	5.00	26.38
Live load			-4.26
Earth Presure			-10.42
	9.86		22.35

e= 1.23 B/6= 1.17

Pmax= 2901 PSF
Pmin= -82 PSF

CASE II Without Soil on the Front of Footing-With Live load

	Force	Arm	Moment
Footing	1.58	3.50	5.51
Stem	1.41	2.50	3.53
Fill in Front	0.00	1.00	0.00
Fill in Back	5.28	5.00	26.38
Live load			-4.26
Earth Presure			-10.42
	8.26		20.74

e= 0.99 B/6= 1.17

Pmax= 2182 PSF
Pmin= 179 PSF

CASE III With Soil on the Front of Footing-Without Live load

	Force	Arm	Moment
Footing	1.58	3.50	5.51
Stem	1.41	2.50	3.53
Fill in Front	1.60	1.00	1.60
Fill in Back	5.28	5.00	26.38
Live load			0.00
Earth Presure			-10.42
	9.86		26.61

e= 0.80 B/6= 1.17

Pmax= 2379 PSF
Pmin= 439 PSF

CASE IV Without Soil on the Front of Footing-Without Live load

	Force	Arm	Moment
Footing	1.58	3.50	5.51
Stem	1.41	2.50	3.53
Fill in Front	0.00	1.00	0.00
Fill in Back	5.28	5.00	26.38
Live load			0.00
Earth Presure			-10.42
	8.26		25.00

e= 0.47 B/6= 1.17

Pmax= 1660 PSF
Pmin= 701 PSF

	Rust E&I
Client	FCDMC
Project	10th Street Wash
Subject	Retaining Walls
Date	13-Nov-95- 11/12/96

Retaining Wall S2 19 of 121

INPUT DATA

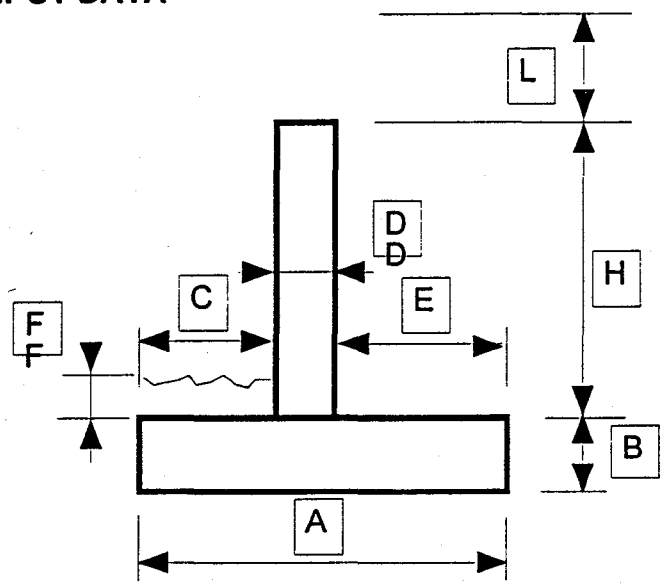

Unit Weight of Soil (PCF)	140
Unit Presure of Soil (PCF)	48

H=	9.420	Feet
A=	7.000	Feet
B=	1.500	Feet
C=	2.000	Feet
D=	1.000	Feet
E=	4.000	Feet
F=	5.420	Feet
L=	2.000	Feet

CASE I With Soil on the Front of Footing-With Live load

	Force	Arm	Moment
Footing	1.58	3.50	5.51
Stem	1.41	2.50	3.53
Fill in Front	1.52	1.00	1.52
Fill in Back	5.28	5.00	26.38
Live load			-4.26
Earth Presure			-10.42
	9.78		22.26

e= 1.22 B/6= 1.17

Pmax= 2863 PSF
Pmin= -69 PSF

CASE II Without Soil on the Front of Footing-With Live load

	Force	Arm	Moment
Footing	1.58	3.50	5.51
Stem	1.41	2.50	3.53
Fill in Front	0.00	1.00	0.00
Fill in Back	5.28	5.00	26.38
Live load			-4.26
Earth Presure			-10.42
	8.26		20.74

e= 0.99 B/6= 1.17

Pmax= 2182 PSF
Pmin= 179 PSF

CASE III With Soil on the Front of Footing-Without Live load

	Force	Arm	Moment
Footing	1.58	3.50	5.51
Stem	1.41	2.50	3.53
Fill in Front	1.52	1.00	1.52
Fill in Back	5.28	5.00	26.38
Live load			0.00
Earth Presure			-10.42
	9.78		26.52

e= 0.79 B/6= 1.17

Pmax= 2342 PSF
Pmin= 453 PSF

CASE IV Without Soil on the Front of Footing-Without Live load

	Force	Arm	Moment
Footing	1.58	3.50	5.51
Stem	1.41	2.50	3.53
Fill in Front	0.00	1.00	0.00
Fill in Back	5.28	5.00	26.38
Live load			0.00
Earth Presure			-10.42
	8.26		25.00

e= 0.47 B/6= 1.17

Pmax= 1660 PSF
Pmin= 701 PSF

Rust E&I
Client FCDMC
Project 10th Street Wash
Subject Retaining Walls
Date 13-Nov-95 OS, Sly. 1/11/96 Retaining Wall S3 21 of 121

INPUT DATA

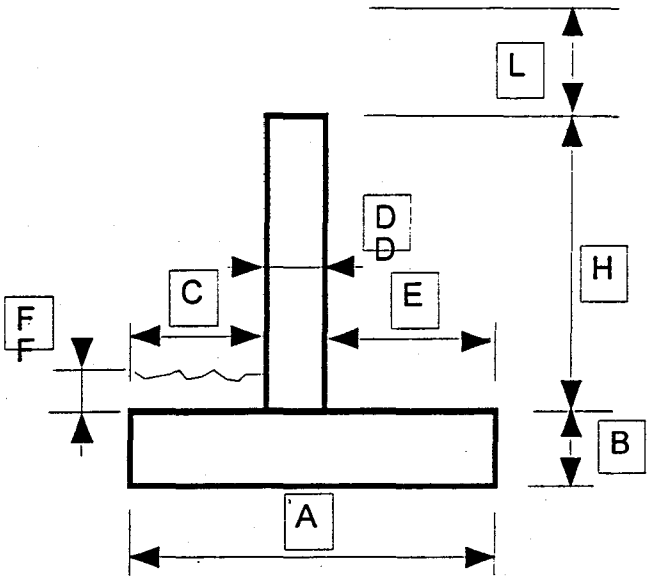

Unit Weight of Soil (PCF)	140
Unit Presure of Soil (PCF)	48

H=	8.885	Feet ✓
A=	5.500	Feet
B=	1.250	Feet
C=	1.750	Feet
D=	1.000	Feet
E=	2.750	Feet
F=	5.420	Feet ✓
L=	2.000	Feet

CASE I With Soil on the Front of Footing-With Live load

	Force	Arm	Moment
Footing	1.03	2.75	2.84
Stem	1.33	2.25	3.00
Fill in Front	1.33	0.88	1.16
Fill in Back	3.42	4.13	14.11
Live load			-3.79
Earth Presure			-8.33
	7.11		8.99

e= 1.49 B/6= 0.92

Pmax= 3390 PSF
Pmin= -804 PSF

CASE II Without Soil on the Front of Footing-With Live load

	Force	Arm	Moment
Footing	1.03	2.75	2.84
Stem	1.33	2.25	3.00
Fill in Front	0.00	0.88	0.00
Fill in Back	3.42	4.13	14.11
Live load			-3.79
Earth Presure			-8.33
	5.78		7.83

e= 1.40 B/6= 0.92

Pmax= 2655 PSF
Pmin= -551 PSF

CASE III With Soil on the Front of Footing-Without Live load

	Force	Arm	Moment
Footing	1.03	2.75	2.84
Stem	1.33	2.25	3.00
Fill in Front	1.33	0.88	1.16
Fill in Back	3.42	4.13	14.11
Live load			0.00
Earth Presure			-8.33
	7.11		12.78

e= 0.95 B/6= 0.92

e ≃ B/6 o.k.

Pmax= 2638 PSF
Pmin= -52 PSF

CASE IV Without Soil on the Front of Footing-Without Live load

	Force	Arm	Moment
Footing	1.03	2.75	2.84
Stem	1.33	2.25	3.00
Fill in Front	0.00	0.88	0.00
Fill in Back	3.42	4.13	14.11
Live load			0.00
Earth Presure			-8.33
	5.78		11.62

e= 0.74 B/6= 0.92

Pmax= 1903 PSF
Pmin= 200 PSF

	Rust E&I
Client	FCDMC
Project	10th Street Wash
Subject	Retaining Walls
Date	13-Nov-95

Retaining Wall S4 23 of 121

INPUT DATA

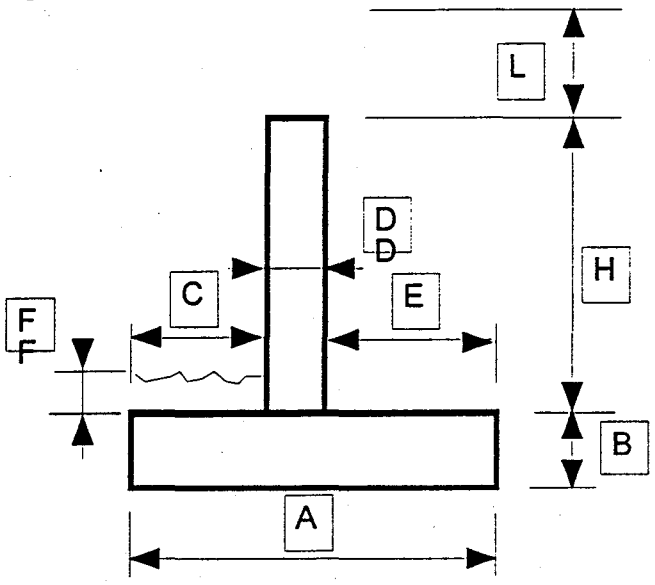

Unit Weight of Soil (PCF)	140
Unit Presure of Soil (PCF)	48

H=	8.427	Feet
A=	5.500	Feet
B=	1.250	Feet
C=	1.750	Feet
D=	1.000	Feet
E=	2.750	Feet
F=	5.500	Feet
L=	2.000	Feet

CASE I With Soil on the Front of Footing-With Live load

	Force	Arm	Moment
Footing	1.03	2.75	2.84
Stem	1.26	2.25	2.84
Fill in Front	1.35	0.88	1.18
Fill in Back	3.24	4.13	13.38
Live load			-3.41
Earth Presure			-7.25
	6.89		9.58

e= 1.36 B/6= 0.92

Pmax= 3108 PSF
Pmin= -603 PSF

CASE II Without Soil on the Front of Footing-With Live load

	Force	Arm	Moment
Footing	1.03	2.75	2.84
Stem	1.26	2.25	2.84
Fill in Front	0.00	0.88	0.00
Fill in Back	3.24	4.13	13.38
Live load			-3.41
Earth Presure			-7.25
	5.54		8.40

e= 1.23 B/6= 0.92

Pmax= 2362 PSF
Pmin= -347 PSF

CASE III With Soil on the Front of Footing-Without Live load

	Force	Arm	Moment
Footing	1.03	2.75	2.84
Stem	1.26	2.25	2.84
Fill in Front	1.35	0.88	1.18
Fill in Back	3.24	4.13	13.38
Live load			0.00
Earth Presure			-7.25
	6.89		12.99

e= 0.86 B/6= 0.92

Pmax= 2432 PSF
Pmin= 73 PSF

CASE IV Without Soil on the Front of Footing-Without Live load

	Force	Arm	Moment
Footing	1.03	2.75	2.84
Stem	1.26	2.25	2.84
Fill in Front	0.00	0.88	0.00
Fill in Back	3.24	4.13	13.38
Live load			0.00
Earth Presure			-7.25
	5.54		11.81

e= 0.62 B/6= 0.92

Pmax= 1686 PSF
Pmin= 329 PSF

	Rust E&I
Client	FCDMC
Project	10th Street Wash
Subject	Retaining Walls
Date	13-Nov-95

Retaining Wall S5 25 of 121

INPUT DATA

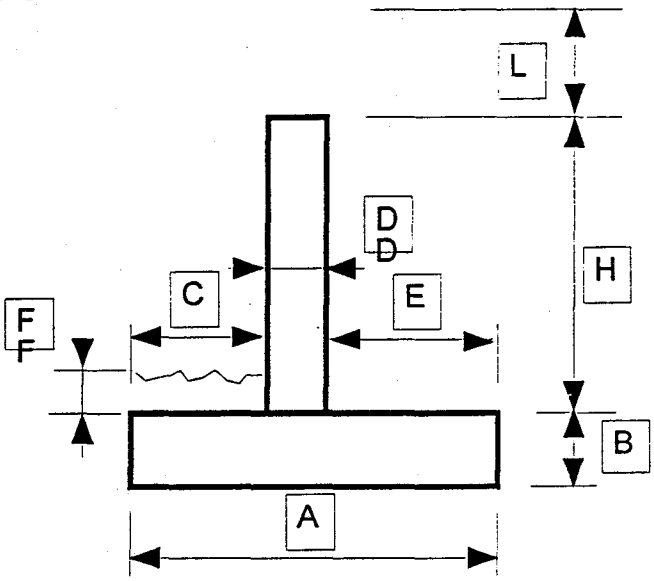

Unit Weight of Soil (PCF)	140
Unit Presure of Soil (PCF)	48

H=	5.000	Feet
A=	3.500	Feet
B=	1.000	Feet
C=	1.000	Feet
D=	1.000	Feet
E=	1.500	Feet
F=	2.500	Feet
L=	2.000	Feet

CASE I With Soil on the Front of Footing-With Live load

	Force	Arm	Moment
Footing	0.53	1.75	0.92
Stem	0.75	1.50	1.13
Fill in Front	0.35	0.50	0.18
Fill in Back	1.05	2.75	2.89
Live load			-1.20
Earth Presure			-1.73
	2.68		2.18

e=	0.94	B/6=	0.58

Pmax=	1990 PSF
Pmin=	-462 PSF

CASE II Without Soil on the Front of Footing-With Live load

	Force	Arm	Moment
Footing	0.53	1.75	0.92
Stem	0.75	1.50	1.13
Fill in Front	0.00	0.50	0.00
Fill in Back	1.05	2.75	2.89
Live load			-1.20
Earth Presure			-1.73
	2.33		2.00

e= 0.89 B/6= 0.58

Pmax= 1676 PSF
Pmin= -347 PSF

CASE III With Soil on the Front of Footing-Without Live load

	Force	Arm	Moment
Footing	0.53	1.75	0.92
Stem	0.75	1.50	1.13
Fill in Front	0.35	0.50	0.18
Fill in Back	1.05	2.75	2.89
Live load			0.00
Earth Presure			-1.73
	2.68		3.38

e= 0.49 B/6= 0.58

Pmax= 1402 PSF
Pmin= 126 PSF

CASE IV Without Soil on the Front of Footing-Without Live load

	Force	Arm	Moment
Footing	0.53	1.75	0.92
Stem	0.75	1.50	1.13
Fill in Front	0.00	0.50	0.00
Fill in Back	1.05	2.75	2.89
Live load			0.00
Earth Presure			-1.73
	2.33		3.20

e= 0.37 B/6= 0.58

Pmax= 1088 PSF
Pmin= 240 PSF

	Rust E&I
Client	FCDMC
Project	10th Street Wash
Subject	Retaining Walls
Date	13-Nov-95 95, 8/5 1/18/96

Retaining Wall S6 27 of 121

INPUT DATA

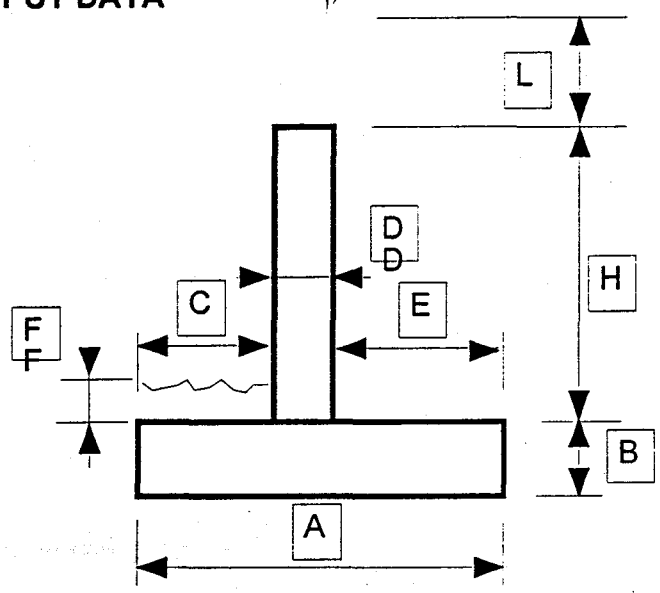

Unit Weight of Soil (PCF)	140
Unit Presure of Soil (PCF)	48

H=	5.500	Feet
A=	4.000	Feet
B=	1.000	Feet
C=	1.167	Feet
D=	1.000	Feet
E=	1.833	Feet
F=	2.500	Feet 2.0
L=	2.000	Feet

CASE I With Soil on the Front of Footing-With Live load

	Force	Arm	Moment
Footing	0.60	2.00	1.20
Stem	0.83	1.67	1.38
Fill in Front	0.41	0.58	0.24
Fill in Back	1.41	3.08	4.35
Live load			-1.45
Earth Presure			-2.20
	3.24		3.52

e=	0.92	B/6=	0.67

Pmax=	1926 PSF
Pmin=	-304 PSF

CASE II Without Soil on the Front of Footing-With Live load

	Force	Arm	Moment
Footing	0.60	2.00	1.20
Stem	0.83	1.67	1.38
Fill in Front	0.00	0.58	0.00
Fill in Back	1.41	3.08	4.35
Live load			-1.45
Earth Presure			-2.20
	2.84		3.28

e= 0.84 B/6= 0.67

Pmax= 1607 PSF
Pmin= -189 PSF

CASE III With Soil on the Front of Footing-Without Live load

	Force	Arm	Moment
Footing	0.60	2.00	1.20
Stem	0.83	1.67	1.38
Fill in Front	~~0.41~~ 0.32	0.58	~~0.24~~ 0.19
Fill in Back	1.41	3.08	4.35
Live load			0.00
Earth Presure			-2.20
	~~3.24~~ 3.16		~~4.97~~ 4.92

e= ~~0.47~~ 0.44 B/6= 0.67

Pmax= ~~1382~~ 1372 PSF
Pmin= ~~241~~ 220 PSF

CASE IV Without Soil on the Front of Footing-Without Live load

	Force	Arm	Moment
Footing	0.60	2.00	1.20
Stem	0.83	1.67	1.38
Fill in Front	0.00	0.58	0.00
Fill in Back	1.41	3.08	4.35
Live load			0.00
Earth Presure			-2.20
	2.84		4.73

e= 0.33 B/6= 0.67

Pmax= 1063 PSF
Pmin= 356 PSF

	Rust E&I
Client	FCDMC
Project	10th Street Wash
Subject	Retaining Walls
Date	13-Nov-95 BS, Slg 1/12/96

Retaining Wall S7 29 of 121

INPUT DATA

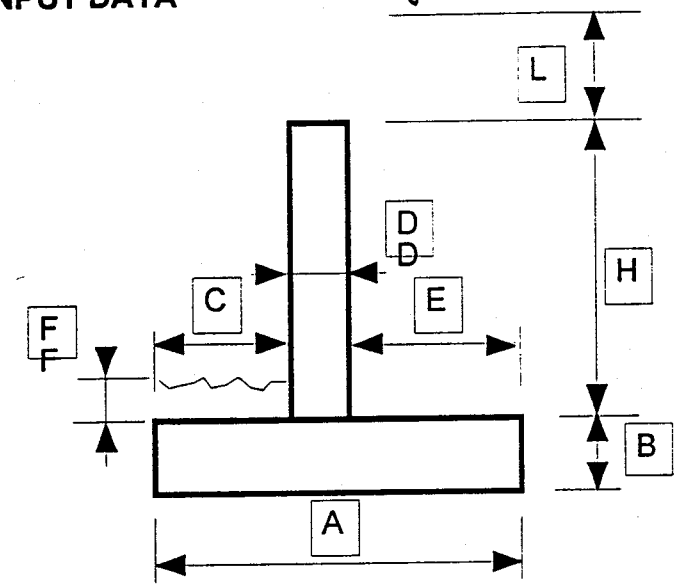

Unit Weight of Soil (PCF)	140
Unit Presure of Soil (PCF)	48

H=	5.500	Feet
A=	4.000	Feet
B=	1.000	Feet
C=	1.167	Feet
D=	1.000	Feet
E=	1.833	Feet
F=	2.000	Feet
L=	2.000	Feet

CASE I With Soil on the Front of Footing-With Live load

	Force	Arm	Moment
Footing	0.60	2.00	1.20
Stem	0.83	1.67	1.38
Fill in Front	0.33	0.58	0.19
Fill in Back	1.41	3.08	4.35
Live load			-1.45
Earth Presure			-2.20
	3.16		3.47

e=	0.90	B/6=	0.67

Pmax=	1862	PSF
Pmin=	-281	PSF

CASE II Without Soil on the Front of Footing-With Live load

	Force	Arm	Moment
Footing	0.60	2.00	1.20
Stem	0.83	1.67	1.38
Fill in Front	0.00	0.58	0.00
Fill in Back	1.41	3.08	4.35
Live load			-1.45
Earth Presure			-2.20
	2.84		3.28

e= 0.84 B/6= 0.67

Pmax= 1607 PSF
Pmin= -189 PSF

CASE III With Soil on the Front of Footing-Without Live load

	Force	Arm	Moment
Footing	0.60	2.00	1.20
Stem	0.83	1.67	1.38
Fill in Front	0.33	0.58	0.19
Fill in Back	1.41	3.08	4.35
Live load			0.00
Earth Presure			-2.20
	3.16		4.92

e= 0.44 B/6= 0.67

Pmax= 1318 PSF
Pmin= 264 PSF

CASE IV Without Soil on the Front of Footing-Without Live load

	Force	Arm	Moment
Footing	0.60	2.00	1.20
Stem	0.83	1.67	1.38
Fill in Front	0.00	0.58	0.00
Fill in Back	1.41	3.08	4.35
Live load			0.00
Earth Presure			-2.20
	2.84		4.73

e= 0.33 B/6= 0.67

Pmax= 1063 PSF
Pmin= 356 PSF

RUST Rust Environment & Infrastructure

CALCULATION SHEET

PROJECT NO. 89932

CLIENT FCDMC

SUBJECT Retaining Walls

PROJECT 10th Street Wash

Stem Reinforcing Steel

Prepared By DS Date 11/14/95

Reviewed By Elg. Date 1/18/96

Approved By _____ Date _____

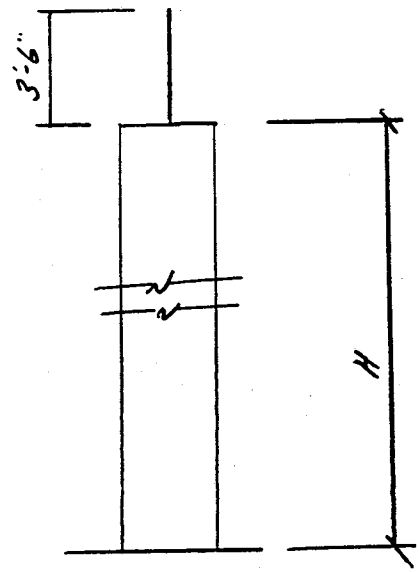

Design Wind Pressure

$P = C_e C_q V_1 I$

$= 1.2 * 1.4 * 17 * 1.0$

$= 28.56$ psf

$d = 12"$

Wall N, $H = 9'-0\frac{1}{4}"$

$M = 0.0148 * 9.02^3 * \frac{1}{2} * \frac{1}{3} + 0.0286 * 3.5 * (\frac{1}{3})(\frac{3.5}{2} + 9.02)$

$= 6.23$ '-k ✓

$d = 12" - 2" - \frac{6}{16}$

$= 9.625"$

$A_s = \frac{M_s}{f_s j d} = \frac{6.23 * 12}{20 * 0.91 * 9.625}$

$= 0.43$ "/ft $* \frac{4}{3} = 0.5690$ "

#6 @ 9" cts $A_s = 0.59$ "/ft ✓

$n = 9 \quad \rho = \frac{0.59}{12(9.625)} = 0.0051$

$K = \sqrt{2\rho n + (\rho n)^2} - \rho n$

$= 0.260$

$j = 1 - \frac{K}{3}$

$= 0.91$

Provide #6 @ 9" cts (V1 bars & V2 bars) ✓

Wall N_2 $H = 8'-8\frac{5}{8}"$

$$m = 0.048 * (8.72)^3 * \frac{1}{3} * \frac{1}{2} + 0.0291 * 3.5 * (\tfrac{1}{3}) \left(\frac{3.5}{2} + 8.72\right)^{o.k.}$$

$$= 5.66^{1-k} \checkmark$$

$d = 9.625"$

$$A_s = \frac{m_s}{f_s j d} = \frac{5.66 * 12}{20 * 0.91 * 9.625}$$

$$= 0.366 * \frac{12}{3} = 0.517$$

Provide #6 @ 9" cts (V, & V_2 bars)

Wall N_3 $H = 8'-5\frac{1}{8}"$

$$m = 0.048 * (8.427)^3 * \frac{1}{3} * \frac{1}{2} + 0.0296 * 3.5 * (\tfrac{1}{3}) \left(\frac{3.5}{2} + 8.427\right)$$

$$= 5.13^{1-k} \checkmark$$

$d = 9.625"$

$n = 9$ $\rho = \frac{0.4418}{12(9.625)} = 0.00383$

$$A_s = \frac{m_s}{f_s j d} = \frac{5.13 * 12}{20 * 0.923 * 9.625}$$

$$= 0.346 * \frac{12}{3} = 0.462 \text{ in}^2/\text{ft}$$

$k = \sqrt{2\rho n + (\rho n)^2} - \rho n$

$= 0.230$

$j = 0.923$

Provide #6 @ 9" cts (V, & V_2 bars)

PROJECT NO. 89932

CLIENT FCDMC

SUBJECT Retaining Walls

PROJECT 10th Street Wash

Stem Reinforcing Steel

Prepared By DS Date 11/14/95

Reviewed By Sly Date 1/18/96

Approved By _____ Date _____

Wall N4 H = 8'-2¾"

$M = 0.046 (8.229)^3 * \frac{1}{3} * \frac{1}{2} + 0.0256 * 3.5 * (\frac{1}{2}) (\frac{3.5}{2} + 8.229)$

$= 4.79^{1-k}$ ✓

$d = 12 - 2 - \frac{6}{16}$

$= 9.625$

$n = 9 \quad \rho = 0.00322$

$j = 0.923$

$A_s = \frac{M_s}{f_s j d} = \frac{4.79 * 12}{20 * 0.923 (9.625)}$

$= 0.3235 * \frac{4}{3} = 0.4313^{in^2}$ ✓

Use #6 @ 12" cts (V, & V2 bars) ✓

Wall N5 H = 5'-6"

$M = 0.046 (5.5)^3 * \frac{1}{3} * \frac{1}{2} + 0.0256 * 3.5 * \frac{1}{2} * (\frac{3.5}{2} + 5.5)$

$= 1.57^{1-k}$ ✓

$d = 12 - 2 - \frac{5}{16}$

$= 9.6875"$

$n = 9 \quad \rho = \frac{0.2016}{12 * 9.6875} = 0.00264$

$k = \sqrt{2\rho n + (\rho n)^2} - \rho n$

$= 0.195$

$A_s = \frac{M_s}{f_s j d} = \frac{1.57 * 12}{20 * 0.935 * 9.6875}$

$= 0.104 * \frac{4}{3} = 0.14$ ✓

Use #5 @ 12" cts (V, & V2 bars) $j = 0.935$

RUST **Rust Environment & Infrastructure**

CALCULATION SHEET

PROJECT NO. 89932

CLIENT FCDMC SUBJECT Retaining Walls

PROJECT 10th street West Stem Reinforcing Steel

Prepared By DS Date 11/14/95

Reviewed By [illegible] Date 1/19/96

Approved By _____ Date _____

Wall S_1 & S_2 $H = 9'-5''$

surcharge &

$M = 0.045(9.4167)^3 \times \frac{1}{3} \times \frac{1}{2} + (0.045 \times 2.0) \times 9.4167^2 \times \frac{1}{2} + 0.0206 \times 25 \times (\frac{1}{2})(\frac{25}{3} + 9.4167)$

$= 11.31$ '-k

$d = 12 - 2 - \frac{7}{16}$

$= 9.5625$

$n = 9$ $\rho = \frac{0.8017}{12(9.5625)} = 0.006985$

$k = 0.297$

$j = 0.901$

$A_s = \frac{M_s}{f_s j d} = \frac{11.31 \times 12}{24 \times 0.901 \times 9.5625}$

$= 0.6563$ in²/ft

Use #7 @ 9" cts (V_1 & V_2 bars)

Wall S_3 $H = 8'-10\frac{5}{8}''$

Use same reinf. as N_1 & N_2 walls

#6 @ 9" cts (V_1 & V_2 bars)

Wall S_4 $H = 8'-5\frac{1}{8}''$

Use same reinf. as N_3 wall

#6 @ 9" cts (V_1 & V_2 bars)

Wall S_5, S_6 & S_7 walls

Use same reinf. as N_5 wall #5 @ 12" cts (V_1 & V_2 bars)

RUST **Rust Environment & Infrastructure**

CALCULATION SHEET

PAGE 35 OF 121

PROJECT NO. 89932

CLIENT FCDMC SUBJECT Retaining Walls Prepared By DS Date 11/14/95

PROJECT 10th Street Wash Reviewed By SLG Date 1/19/96

Approved By _____ Date _____

Wall N,

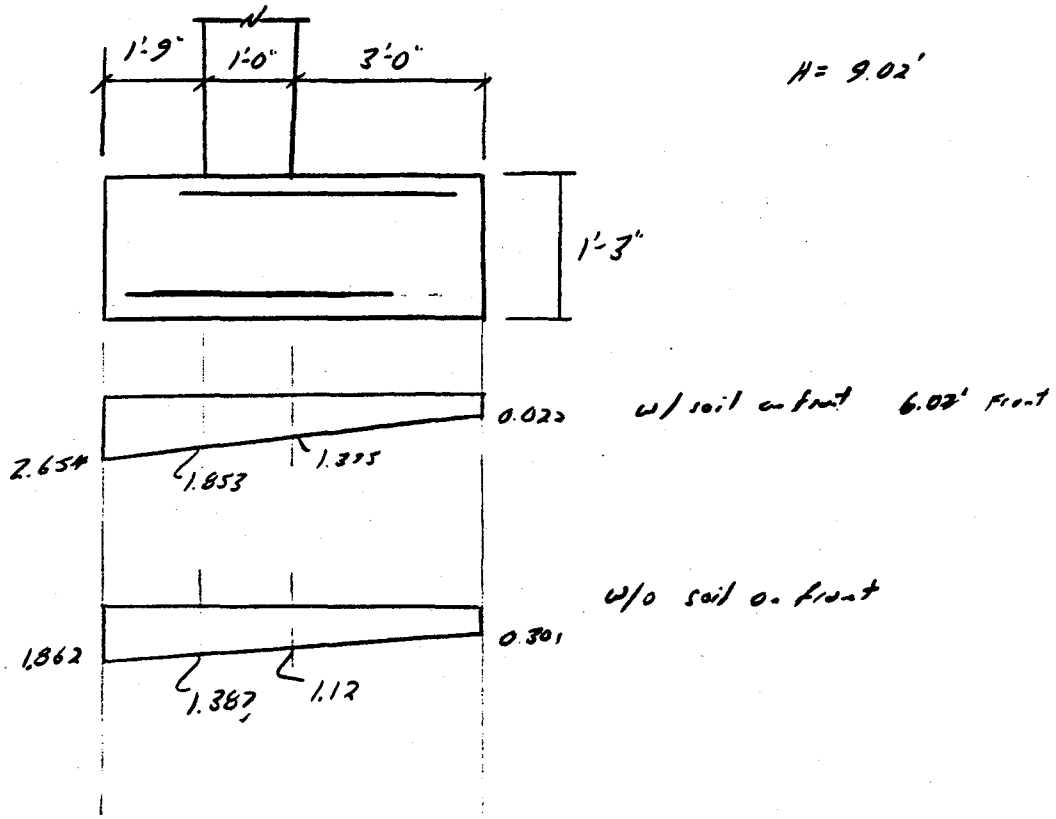

Toe

$M = 1.387(1.75^2) * \frac{1}{2} + 0.475(1.75^2) * \frac{1}{2} * \frac{2}{3} - 1.25 * 0.15 * 1.75^2/2$

$= \cancel{2.32}^{1\text{-k}}$ 2.03 1-k use 2.32

$d = 15" - 3" - \frac{5}{16}$ ✓ $= 11.6875$ ✓

$n = 9 \quad \rho = \frac{0.3068}{12(11.6875)}$

$A_s = \frac{M_s}{f_s j d} = \frac{2.32 * 12}{20 * 0.94 * (11.6875)} =$

$k = 0.179 \quad j = 0.94$

$= 0.126 * \frac{4}{3} = 0.17 \text{ in}^2/\text{ft}$ ✓ say #5 @ 12" cts B_1 bars ✓

Heel

$M = 0.022 * 3.0^2/2 + \cancel{1.373}\ 1.395 * 3.0^2 * \frac{1}{2} * \frac{1}{3} - 1.25 * 0.15 * 3.00^2/2 - 9.02 * 0.141 * 3.0^2/2$

$= -4.41^{1\text{-k}}$ ✓

$A_s = \frac{4.41 * 12}{20 * 0.94 * (12.6875)} = 0.22 * \frac{4}{3} = 0.2957 \text{ in}^2/\text{ft}$ ✓ say #5 @ 12" cts B_2 bars

CLIENT FCDMC SUBJECT Retaining Walls Prepared By DS Date 11/14/95

PROJECT 10th Street Wash Reviewed By [illegible] Date 1/19/96

Approved By _____ Date _____

Wall N_2

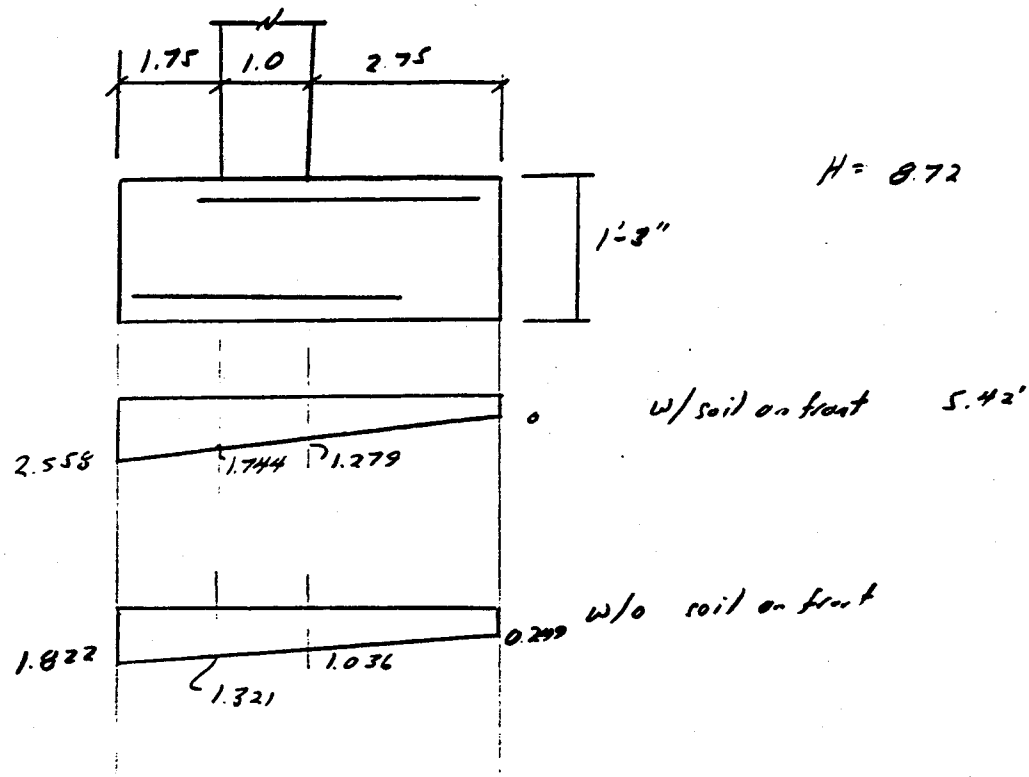

Toe

$M = 1.321 * 1.75^2 * \frac{1}{2} + 0.501 (1.75)^2 * \frac{1}{2} * \frac{2}{3} - 1.25 * 0.15 * 1.75^2/2$

$= 2.25^{1-k}$ < 2.32^{1-k} (N. wall) Use #5 @ 12" ctr B_1 bars

Heel

$M = 1.279 * 2.75^2/2 * \frac{1}{3} - 1.25 * 0.15 * 2.75^2/2 - 8.72 * 0.141 * 2.75^2/2$

$= -3.75^{1-k}$ < 4.41^{1-k} (N. wall) Use #5 @ 12" ctr B_2 bars

PROJECT NO. 89932

CLIENT FCDMC SUBJECT Retaining Walls Prepared By DS Date 11/14/95

PROJECT 10th Street Wash Reviewed By SLG Date 1/19/96

Approved By _____ Date _____

Wall N_3 & S_4

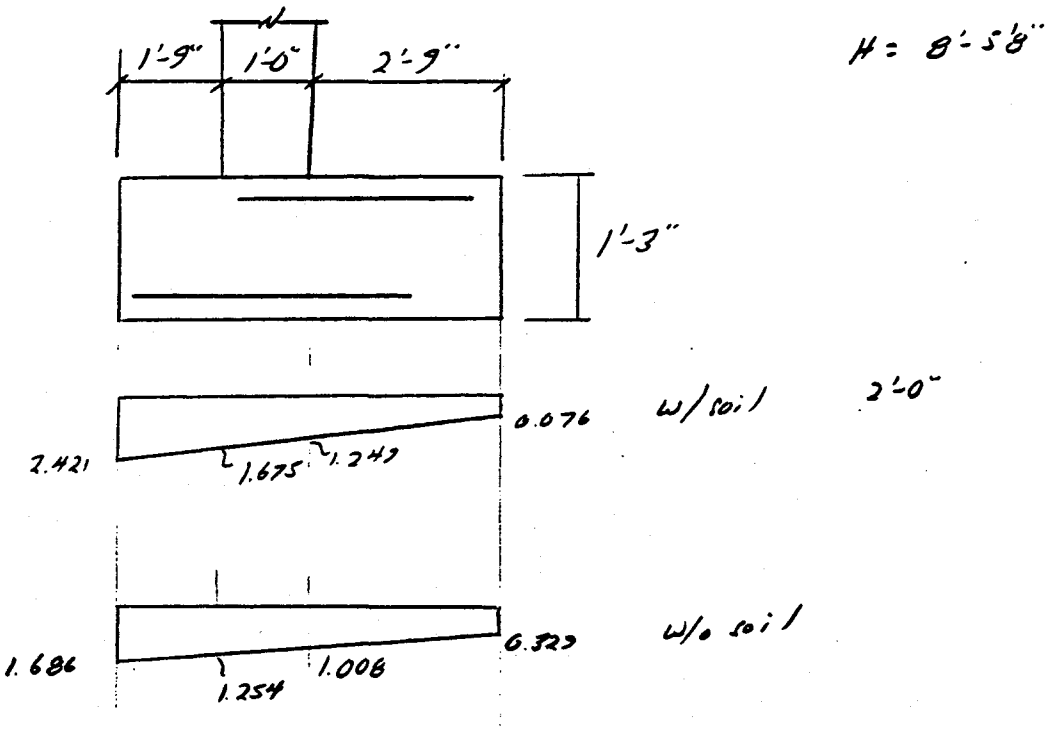

By inspection moments are less than N_1 & N_2 walls

Use #5 bars @ 12" c/c, top & bottom for B_1 & B_2 bars

PROJECT NO. 89932

CLIENT FCDMC

SUBJECT Retaining Walls

PROJECT 10th Street Wash

Prepared By DS Date 11/14/95

Reviewed By Sly. Date 1/19/96

Approved By _____ Date _____

Wall N4

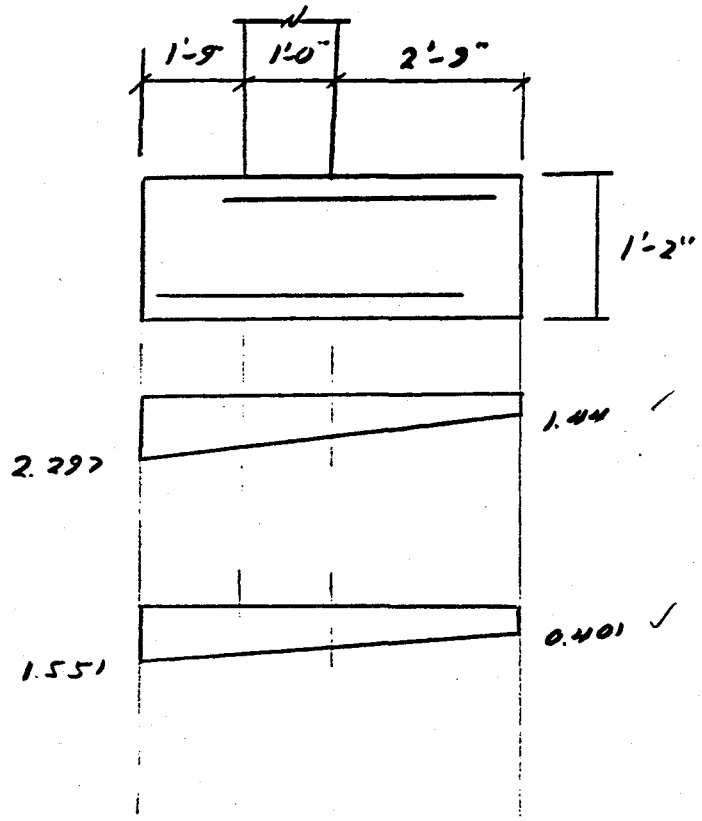

By inspection moments are less than N1 & N2 walls

Use #5 @ 12"cts top & bottom for B1 & B2 bars

Wall N5, S6 & S7

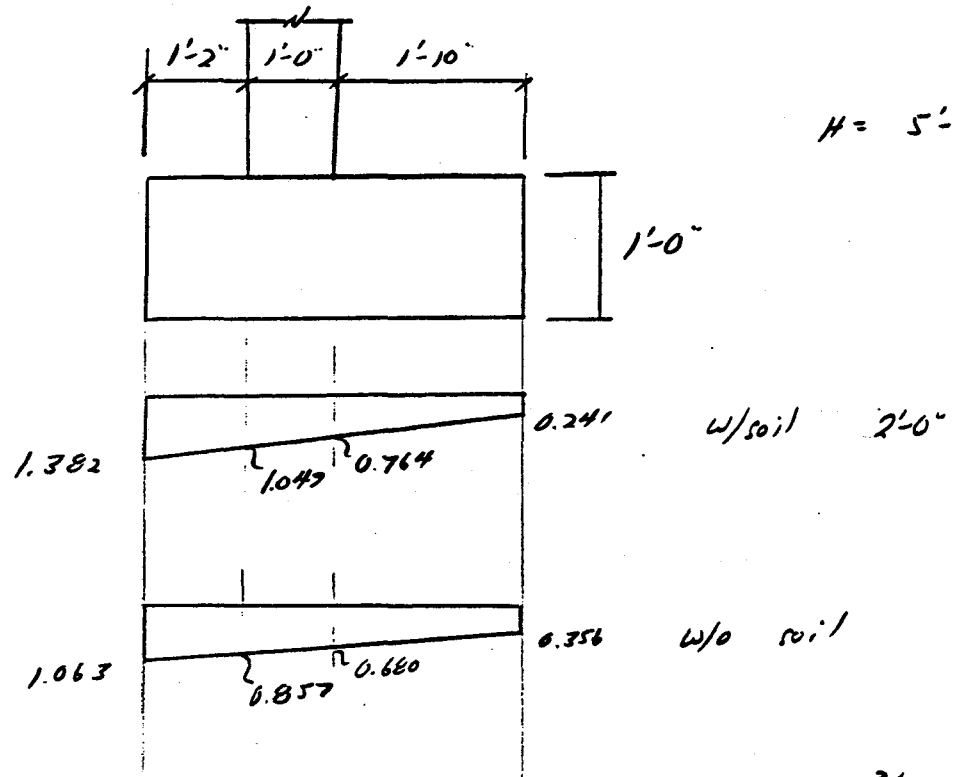

Toe

$M = 0.857(1.167)^2 \times \frac{1}{2} + 0.206(1.167)^2 \times \frac{1}{2} \times \frac{2}{3} - 1.0 \times 0.15 \times 1.167^2/2$

$= 0.575^{1-k}$

$n = 9 \quad \rho = \frac{0.3068}{12 \times 8.375} = 0.0030$

$A_s = \frac{M_s}{k f j} = \frac{0.575 \times 12}{20 \times 0.930 \times 8.375} = 0.04 \times \frac{4}{3} = 0.06^{in^2}/ft$

$k = 0.208$

$j = 0.930$

#5 @ 12"cts B1 bars

Heel

$M = 0.241 \times 1.83^2/2 + 0.523 \times 1.83 \times \frac{1}{2} \times \frac{1}{3} - 1.0 \times 0.15 \times 1.83^2/2 - 5.5 \times 0.141 \times 1.83^2/2$

$= -0.98^{1-k}$

$n = 9 \quad \rho = \frac{0.3068}{12 \times 9.375} = 0.00272$

$A_s = \frac{M_s}{k f j} = \frac{0.98 \times 12}{20 \times 0.934 (9.375)} = 0.067 \times \frac{4}{3} = 0.089$

$k = 0.198$

$j = 0.934$

#5 @ 12"cts B2 Bars

RUST Rust Environment & Infrastructure

CALCULATION SHEET

PROJECT NO. 89932

CLIENT FCDMC SUBJECT Retaining Walls Prepared By DS Date 11/18/95

PROJECT 10th Street Wash Reviewed By Sdg Date 1/19/96

Approved By _____ Date _____

Wall S_1 & S_2

H = 9.42'

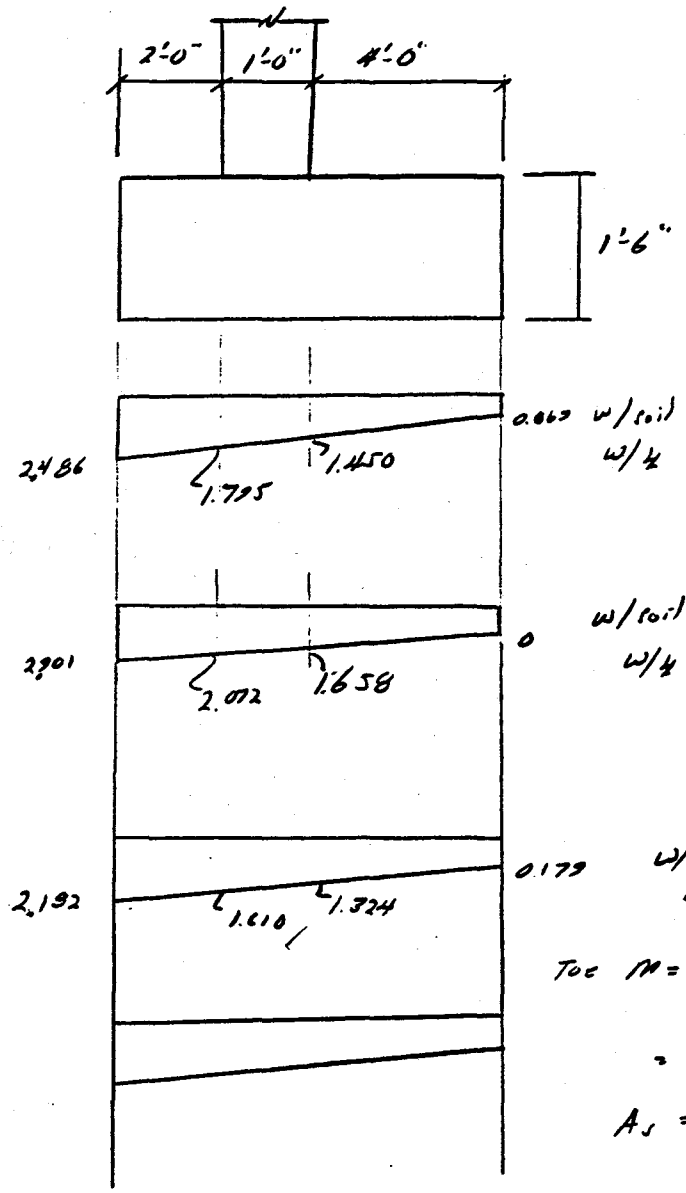

Toe $M = 1.61 * 2.0^2/2 + 0.572 * 2.0^2/2 * \frac{2}{3} - 1.5 * 0.15 * 2.0^2/2$

$= 3.53'^{-k}$ ✓

$A_s = \frac{3.53 * 12}{20 * 0.946 * 14.625} =$

$= 0.152 * \frac{4}{3} = 0.2032$

#5 @ 12" cts B. bars ✓

$\rho = \frac{0.3063}{12(14.625)}$

$n = 9$

$k = 0.162$

$j = 0.946$

Heel

$M = 0.063 * 4.0^2/2 + 1.381 * 4.0^2 * \frac{1}{2} * \frac{1}{3} - 1.5 * 0.15 * 4.0^2/2 - 1.142 * 0.141 * 4.0^2/2$

L + 2' surcharge

$= -10.447'^{-k}$ ✓

$A_s = \frac{10.447 * 12}{20 * 0.930 * 15.625} = 0.4296 * \frac{4}{3} = 0.57^{in^2}/ft$

$\rho = \frac{0.4416 * \frac{12}{3}}{12(15.625)} =$

$n = 9$

$k = 0.210$

$j = 0.930$ ✓

use #6 @ 9" cts B_2 bars

Rust Environment & Infrastructure

CALCULATION SHEET

PAGE 41 OF 121

PROJECT NO. 89932

CLIENT FCDMC

SUBJECT Retaining Walls

Prepared By DS Date 11/15/95

PROJECT 10th Street Wash

Reviewed By [illegible] Date 1/19/96

Approved By _____ Date _____

Wall S_3

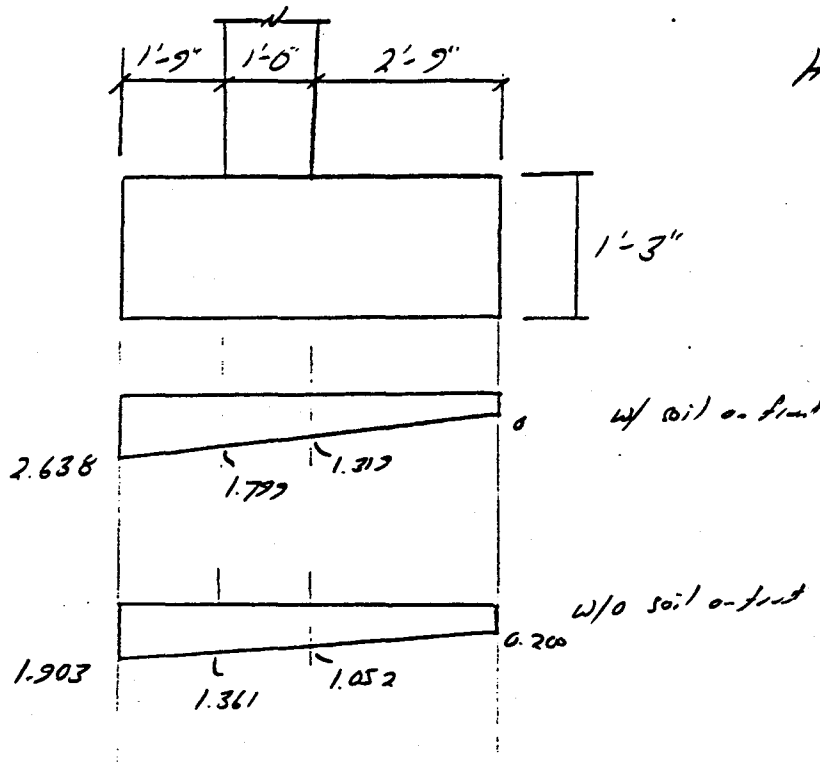

$H = 8'\text{-}10\tfrac{5}{8}"$

Toe

$M = 1.361\,(1.75^2) * \frac{1}{2} + 0.542\,(1.75^2) * \frac{1}{2} * \frac{2}{3} - 1.25 * 0.15 * 1.75^2/2$

$= 2.35^{\text{'-k}}$ Use #5 @ 12" cts B_1 bars (see N_1 wall)

Heel

$M = 1.319 * 2.75^2 * \frac{1}{2} * \frac{1}{3} - 1.25 * 0.15 * 2.75^2/2 - 8.885 * 0.141 * 2.75^2/2$

$= -3.783$

Use #5 @ 12" cts B_2 bars (see N_1 wall

Wall S5

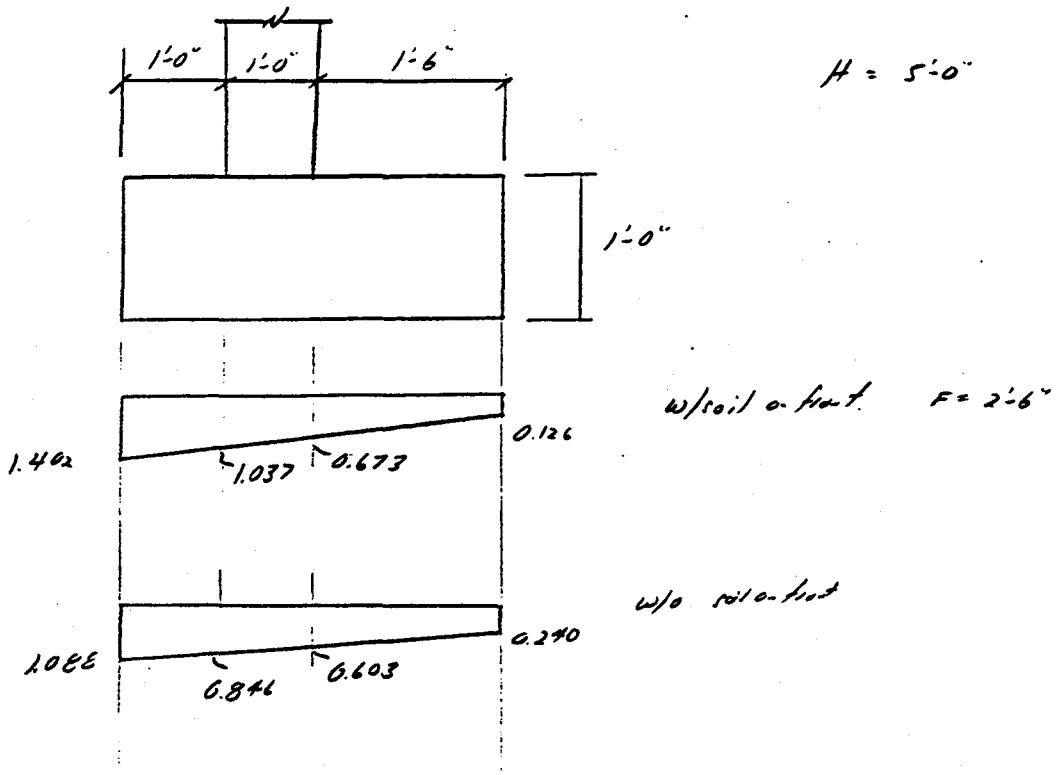

Toe

$M = 0.846 * 1.0^2/2 + 0.242(1.0)^2 * \frac{1}{2} * \frac{2}{3} - 1.0 * 0.15 * 1.0^2/2$

$= 0.429^{1-k}$

$A_s = \frac{0.429 * 12}{20 * 0.931 (8.6875)} = 0.03^{0''} * \frac{4}{3} = 0.04^{0''}$

$d = 8.6875$

$\rho = \frac{0.3068}{12(8.6875)}$

$k = 0.205$

$j = 0.931$

#5 @ 12" c/s B1 bars

Heel

$M = 0.126 * 1.5^2/2 + 0.547 * 1.5^2/2 * \frac{1}{3} - 1.0 * 0.15 * 1.75^2/2 - 5.0 * 0.140 * 1.5^2/2$

$= -0.67^{1-k}$

$A_s = \frac{0.67 * 12}{20 * 0.9 * 8.6875} = 0.047 * \frac{4}{3} = 0.062''/ft$

Use #5 @ 12" c/s B2 bars

RUST ENVIRONMENT & INFRASTRUCTURE

CALCULATION SHEET

PAGE 43 OF 121

PROJECT NO. _____

CLIENT FCDMC

PROJECT 10th street

SUBJECT Retaining Wall @ Entrance to E1 through E3

Prepared By DS Date 11/06/95

Reviewed By [illegible] Date 1/19/96

Approved By _____ Date _____

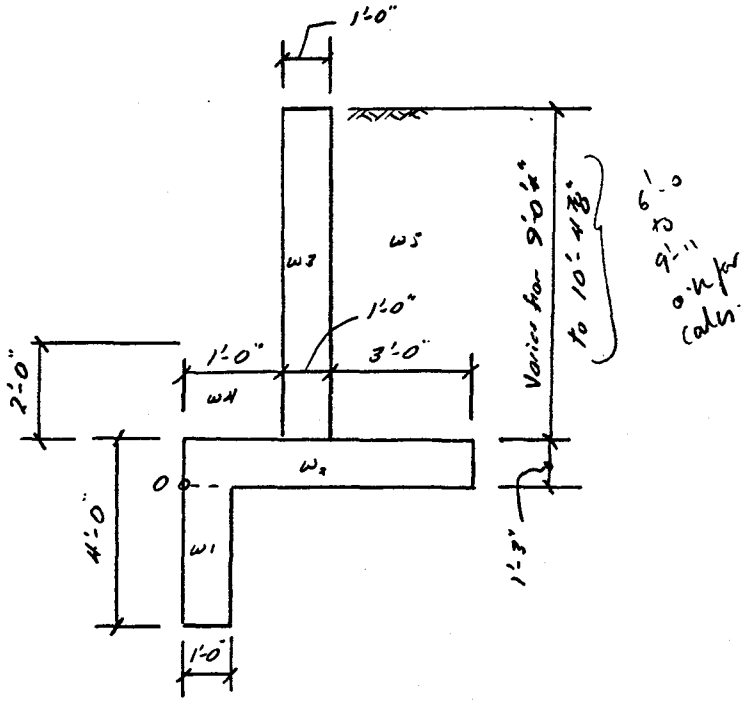

$[\Sigma M_o = 0]$

		Force	Arm	Moment	
w1	1.0 (4 - 1.25) * 0.15 =	0.41	0.5'	0.20	
w2	1.25 (5.0) * 0.15 =	0.94	2.5'	2.34	
w3	1.00 (10.42) * 0.15 =	1.56	1.5'	2.34	
	0	0	0.5	0	
normal w4	1.0 (3.0) * 0.14 =	0.42	0.5'	0.21	Soil
w4	1.0 (10.42) * 0.14 =	1.46	0.5'	0.73	
w5	3.0 (10.42) * 0.14 =	4.38	3.5	15.32	
	0.048 * (10.42)³ · ½ * ⅓	—	—	-9.05	

o.k. for calcs. 10.42 + 1.25

7.29ᵏ w/o soil on front 11.05

8.75ᵏ w/ soil on front 11.88

11.15 o.k. for calcs.

w/o load on front $e = \frac{11.05}{7.29}$ 1.52' 2.5 - 1.52 = 0.92 from ℄ > $\frac{5}{6}$ N.G.

$\frac{5}{6}$ = 0.833 force outside middle ⅓

w/ load on front $e = \frac{11.88}{8.75}$ 1.35' 2.5 - 1.35 = 1.15 > $\frac{5}{6}$ N.G.

RUST ENVIRONMENT & INFRASTRUCTURE

CALCULATION SHEET

PROJECT NO. _____

CLIENT FCDMC

SUBJECT Retaining Wall

PROJECT 10th st. wash

Prepared By DS Date 11/06/95

Reviewed By Slag Date 11/19/96

Approved By _____ Date _____

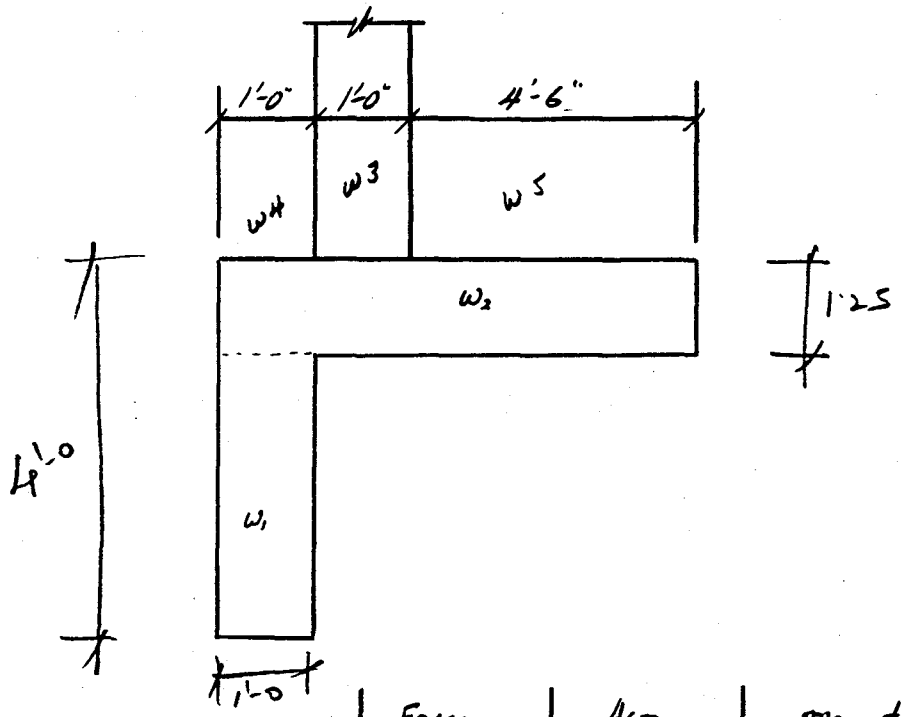

		Force	Arm	Moment
w1	1.0 (4 - 1.25) * 0.15 =	0.41	0.5'	0.21 ✓
w2	1.25 (6.5) * 0.15 =	1.22 ✓	3.25'	3.97 ✓
w3	1.00 (10.42) * 0.15 =	1.56	1.50	2.34 ✓
w4	1.00 (10.42) * 0.14 =	1.46 1.38	0.50	0.73 0.69
w5	4.5 (10.42 * 0.14 =	6.56 6.24	4.25	27.90 26.5
	0.048 * 10.42³ ½ × ⅓ =	—	—	-9.05 ink — w/soil on front
	0.048 * (11.67)³ ½ × ⅓	—	—	-12.70 — w/o soil on front
	No soil on front	9.75 ✓		21.70 ink (soil full height on bk side)
	soil on front	11.21 ✓		26.10 ink

w/o soil on front $\frac{21.70}{9.75} = 2.22$ $3.25 - 2.22 = 1.03$ from ℄ < 1.08

$\frac{6.50}{6} = 1.08$

w/ soil on front $\frac{26.10}{11.21} = 2.32$ $3.25 - 2.32 = 0.92$ from ℄ < 1.08

Calculate soil Pressures

$$P_{max}/P_{min} = \frac{P}{A} \pm \frac{P(e)\,c}{I}$$

$$= \frac{9.75}{6.5 * 1.0} \pm \frac{9.75(1.03)\left(\frac{6.5}{2}\right)}{\frac{1}{12}(6.5)^3} \qquad = \frac{11.21}{6.5 * 1} \pm \frac{11.21(0.92)\left(\frac{6.5}{2}\right)}{\frac{1}{12}(6.5)^3}$$

$$= 1.50 \pm 1.42 \qquad = 1.72 \pm 1.46$$

$= 2.92$ k/sq ft/ft max $\qquad = 3.18$ k/sq ft/ft max

$= 0.08$ k/sq ft/ft min $\qquad = 0.26$ k/sq ft/ft min

Design of Heel

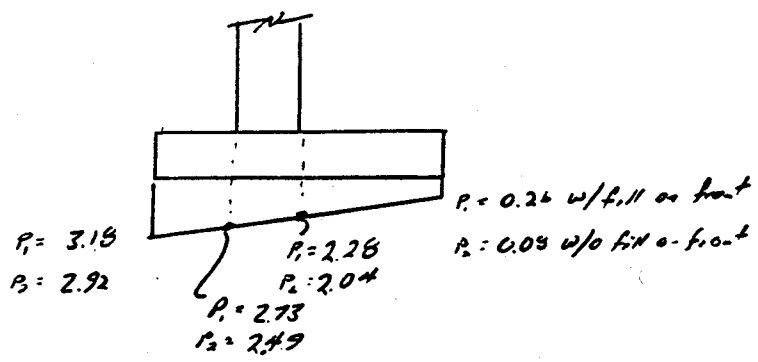

$$M = 10.42 * 0.14 * \frac{4.5^2}{2} + 1.25 * 0.15 * 4.5^2/2 - 0.26 * 4.5^2/2 - 2.02 * 4.5^2/2 * \frac{1}{3}$$

$$= 7.22 \text{ '-k}$$

$$d = 15'' - 2'' - \frac{6}{16} = 12.625''$$

Try #5 @ 12" ctr $\qquad k = \sqrt{2\rho n + (\rho n)^2} - \rho n \qquad n = 9$

$= 0.173 \qquad \rho = 0.00201$

$j = 0.93$

$$A_s = \frac{M_s}{f_s j d} = \frac{7.22 * 12}{20 * 0.93 * 12.625} = 0.369 * \frac{4}{3} = 0.491 \text{ in}^2/\text{ft} \quad \text{use \#6 @ 9" ctr}$$

CLIENT FCDMC SUBJECT Retaining Wall Prepared By DS Date 11/06/95

PROJECT 10th Street Reviewed By Sly Date 1/19/96

Approved By Date

Design of Toe

$M = (1)\,0.43 * 1.0^2/2 * \frac{2}{3} + (1)\,2.49 * 1.0^2/2 - 4.0 * 1.0 * 0.15 * \frac{1}{2}$

$= 1.09^{1-k}/ft$ w/o fill

$M = 0.45 * 1.0^2/2 * \frac{2}{3} + 2.73 * 1.0^2/2 - 4 * 1.0 * 0.15 * \frac{1}{2} - 10.42 * 1.0 * 0.14 * \frac{1}{2}$

$= 0.49^{k}/ft$ w/fill

Use same steel as in back face (Same bar)

Design of Stem

$M = 9.05^{1-k}$ $d = 12" - 2" - \frac{7}{16} = 9.5625$ $k = 0.264$

$j = 0.91$

$A_s = \frac{M_s}{f_s j d} = \frac{9.05 * 12}{24 * 0.91 * 9.5625} = 0.52^{in^2} * \frac{4}{3} = 0.693$

$A_{s_{min}} = 0.005 * 9.5625 * 12$

$= 0.574^{in^2}/ft$

~~Use #7 @ 12" cts~~

Use #6 @ 9" cts

CLIENT FCDMC SUBJECT Retaining Wall Prepared By DS Date 11/06/95

PROJECT 10th Street Reviewed By Sly Date 1/19/96

Approved By _____ Date _____

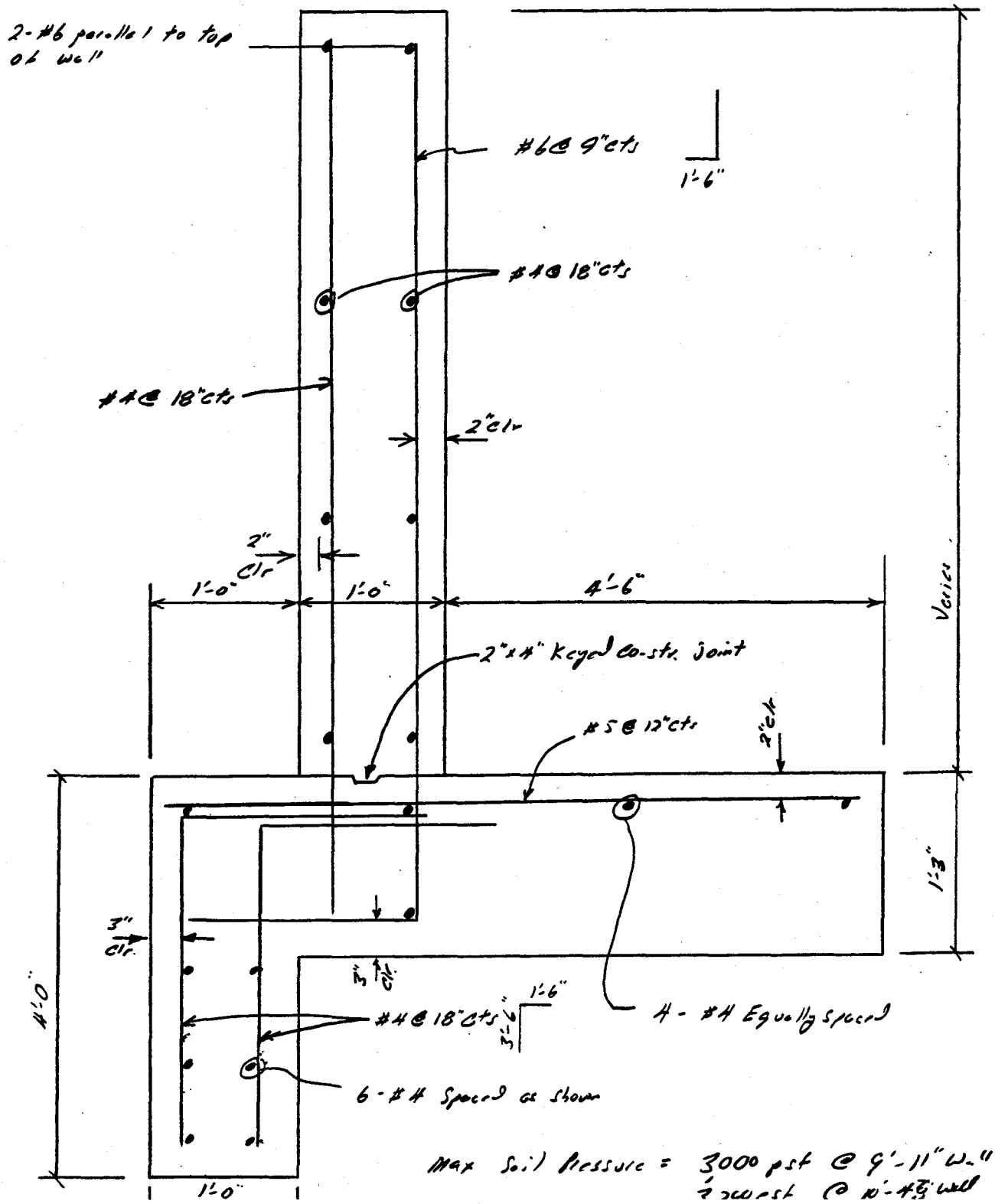

Max Soil Pressure = 3000 psf @ 9'-11" wall
2200 psf @ 10'-4½" wall

CLIENT FCDMC SUBJECT Channel design Prepared By DS Date 11/06/03

PROJECT 10th Street Reviewed By ____ Date ____

Approved By ____ Date ____

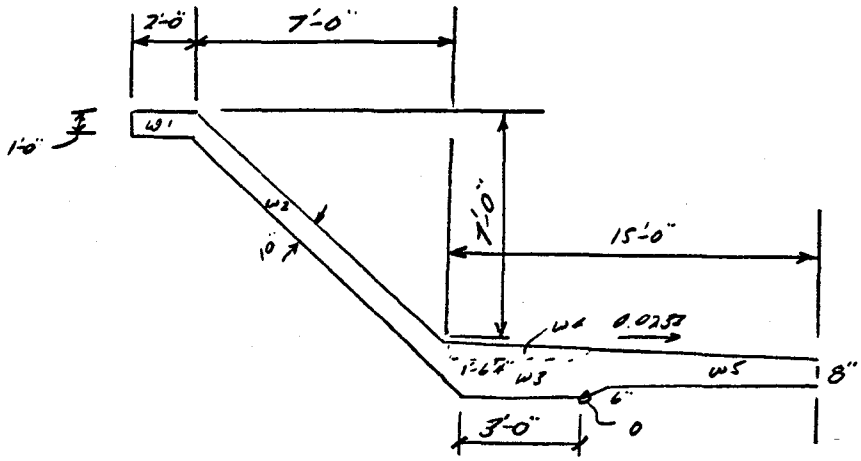

[Σ Moments = 0]

	Force	Arm	Moment
W1 $2.0 \times 1.0 \times 0.15 =$	0.30 ✓	23.00 ✓	6.90 ✓
W2 $9.899 \times \frac{10}{12} \times 0.15 =$	1.24	18.79	23.25
W3 $1.43 \times 3.0 \times 0.15 =$	0.64 ✓	~~13.25~~ 13.5	~~8.53~~ 8.64 o.k.
W4 $(1.52-1.43) \times 3.0 \times 0.15 \times \frac{1}{2} =$	0.02	~~13.75~~ 14.0	0.28 ✓
W5 $\frac{(0.67+0.98)}{2} \times 12.0 \times 0.15 =$	1.44 ✓	6.0	8.64 ✓
Earth $(10.52)^3 \times 0.048 \times \frac{1}{2} \times \frac{1}{3} =$	—	—	-9.31
Water $0.064 \times 7^2 \times \frac{1}{2} =$	7.568	17.33	27.18 ✓
$0.064 \times 7 \times 15 =$	6.72	7.5	50.40 ✓
	11.93		115.87 o.k.

$$X = \frac{115.87}{11.93} = 9.71$$

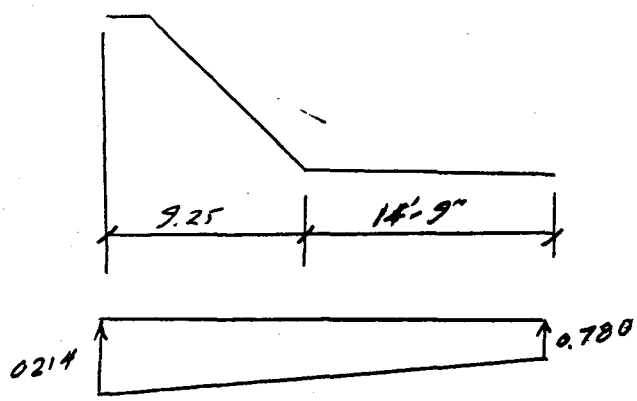

$$\frac{P}{A} \pm \frac{Mc}{I}$$

$$\frac{11.93}{24} \pm \frac{11.93 \times 2.28\,(12)}{\frac{1}{12}\,1.0 \times 24^3}$$

$$= 0.497 \pm 0.283$$

$$= 0.780$$
$$0.214$$

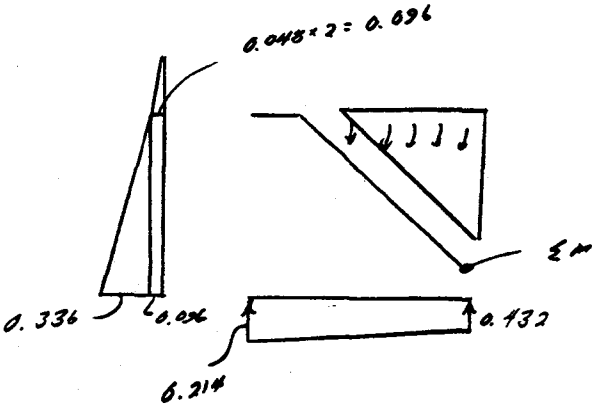

$$M = 9.0^3 * 0.048 * \tfrac{1}{2} * \tfrac{1}{3} + 0.214(9.25)^2/2 + (0.432 - 0.214) * 9.25^2 * \tfrac{1}{2} * \tfrac{1}{3}$$

$$- 0.30 * 8.0 - 1.24(3.79) - 0.064 * 7^2 * \tfrac{1}{2} * \tfrac{1}{3}$$

$$= 7.34^{\,1\text{-}k}$$

$$d = 10 - 3 - \tfrac{4}{16}$$

$$= 6.75$$

$$A_s = \frac{M_s}{f_s j d} = \frac{7.34 * 12}{20 * 0.9 * 6.75} = 0.73^{\square''}$$

Use #6 @ 12" ctrs

alt w/ #6 @ 12" ctrs

Find point @ which #6 bars are adequate

$$M = (9.0 - x)^3 * 0.048 * \tfrac{1}{2} * \tfrac{1}{3} + 0.214(9.25 - x)^2/2 + (0.0236 * (9.25 - x)) * (9.25 - x)^2 * \tfrac{1}{2} * \tfrac{1}{3}$$

$$- 0.3 * (8 - x) - \tfrac{10}{12} * 6.15(7 - x)/\cos 45^\circ \left[(7 - x)0.54\right] - 0.064(7 - x)^3 * \tfrac{1}{2} * \tfrac{1}{3}$$

$$M_s = 0.4418 * 1 * 20 * 0.9 * 6.75/12$$

$$= 4.47^{\,1\text{-}k}/ft$$

@ $x = 1$ $M = 5.75^{1\text{-}k}$

@ $x = 2$ $M = 4.35^{1\text{-}k}$

@ $x = 3$ $M = 3.55^{1\text{-}k}$

RUST **Rust Environment & Infrastructure**

CALCULATION SHEET

PROJECT NO. 89932

CLIENT FCDMC

SUBJECT Channel design

PROJECT 10th street

Prepared By DS Date 11/06/95

Reviewed By [illegible] Date 1/19/96

Approved By _____ Date _____

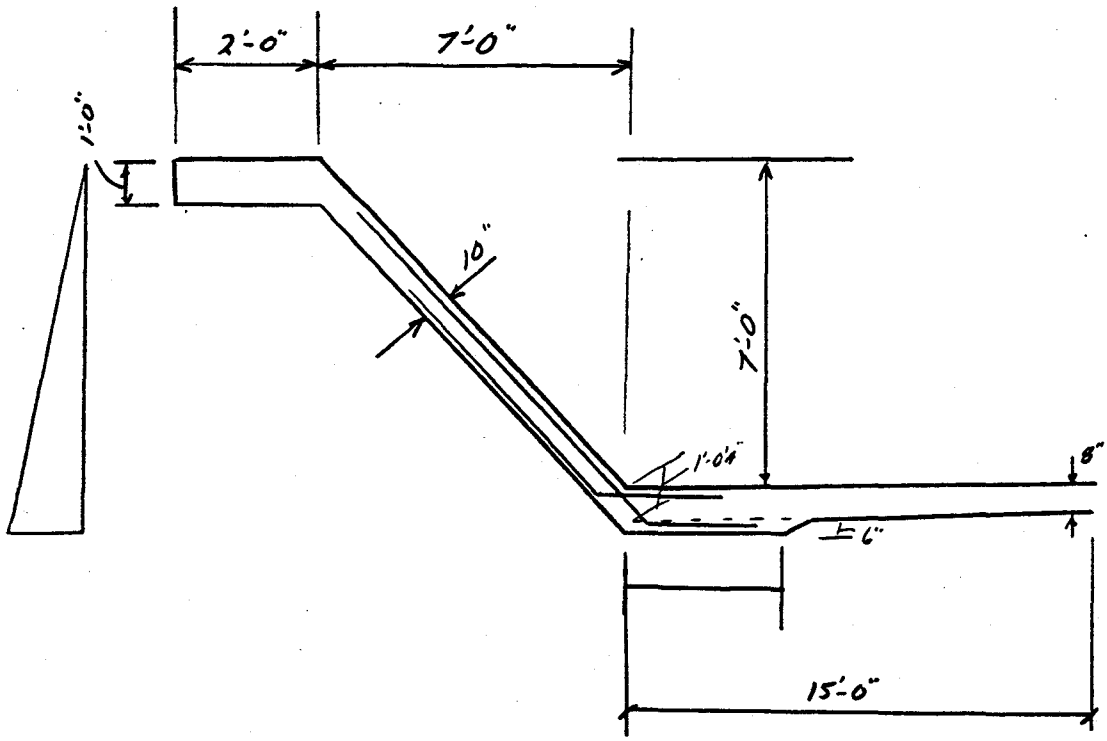

RUST ENVIRONMENT & INFRASTRUCTURE

CALCULATION SHEET

PROJECT NO. 89932

CLIENT FCDMC

SUBJECT Retaining Wall Charcoal design

Prepared By DS Date 11/06/95

Reviewed By [illegible] Date 11/19/96

Approved By ____ Date ____

PROJECT 10th Street

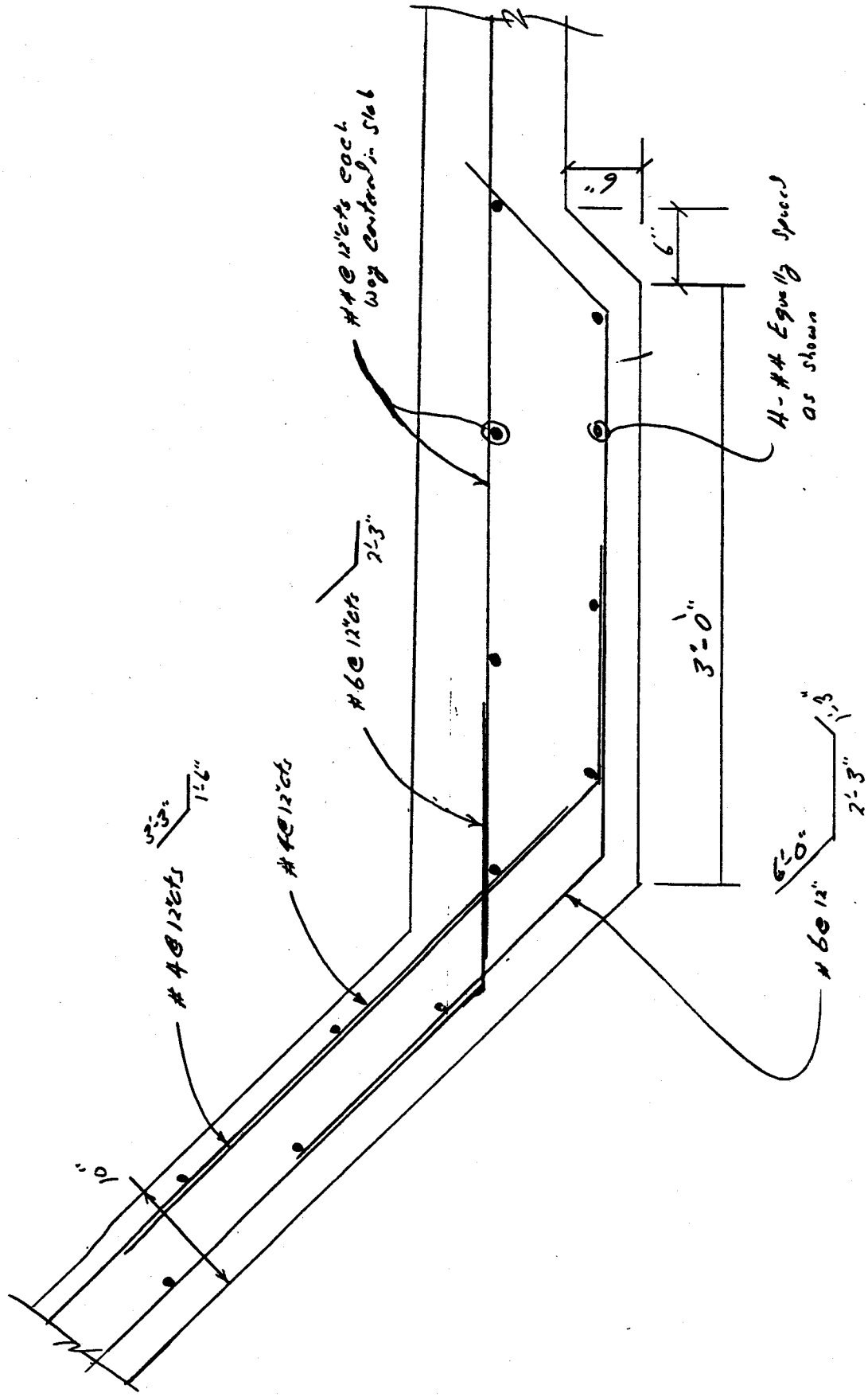

RUST ENVIRONMENT & INFRASTRUCTURE

CALCULATION SHEET

PROJECT NO. 89938

CLIENT FCDMC

SUBJECT Retaining Wall Channel design

Prepared By DS Date 11/06/95

PROJECT 10th Street

Reviewed By [illegible] Date 1/17/96

Approved By ____ Date ____

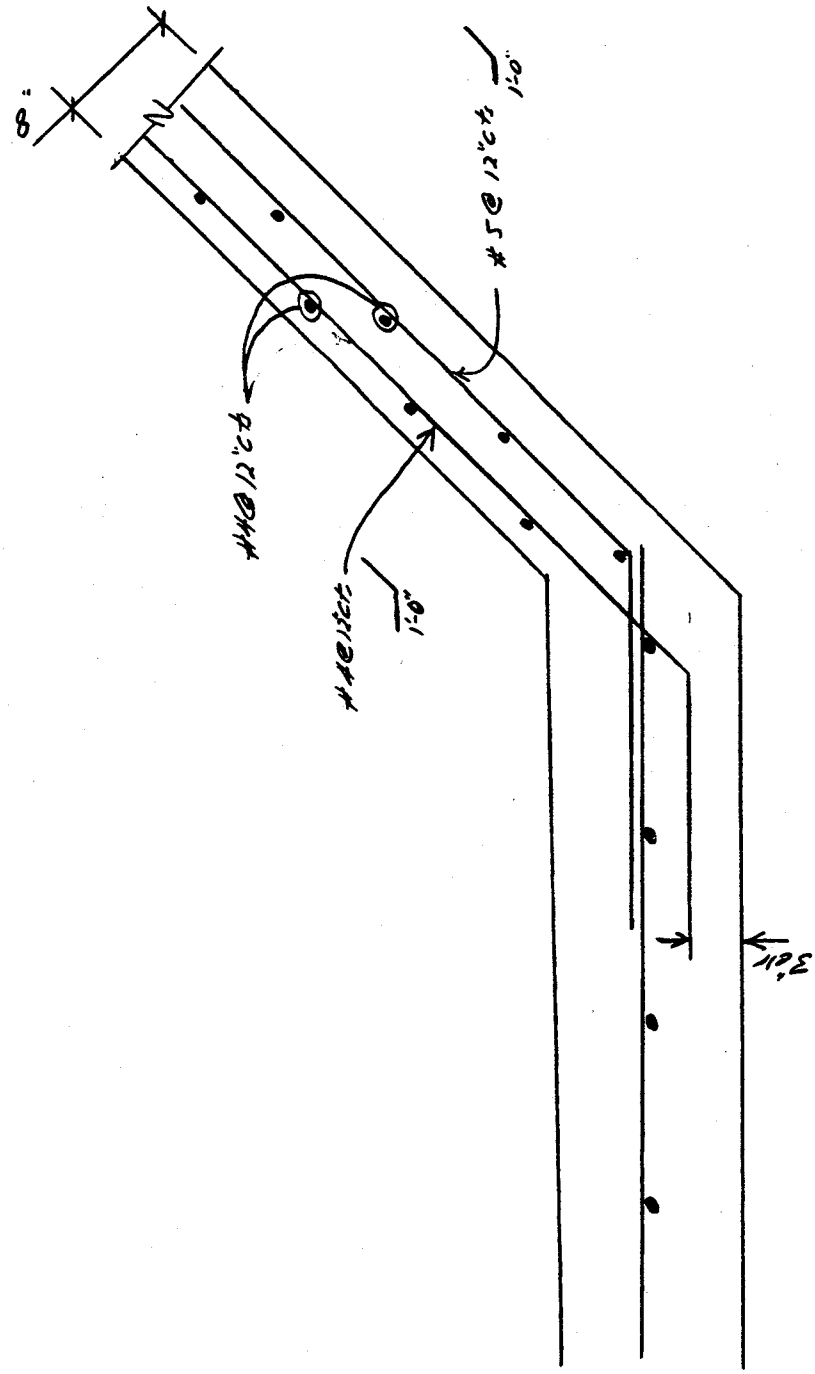

RUST ENVIRONMENT & INFRASTRUCTURE

CALCULATION SHEET

PROJECT NO. 89932

CLIENT FCDMC

SUBJECT Retaining Wall Channel

PROJECT 10th Street

Prepared By DS Date 11/01/95

Reviewed By Sly Date 1/19/96

Approved By ____ Date ____

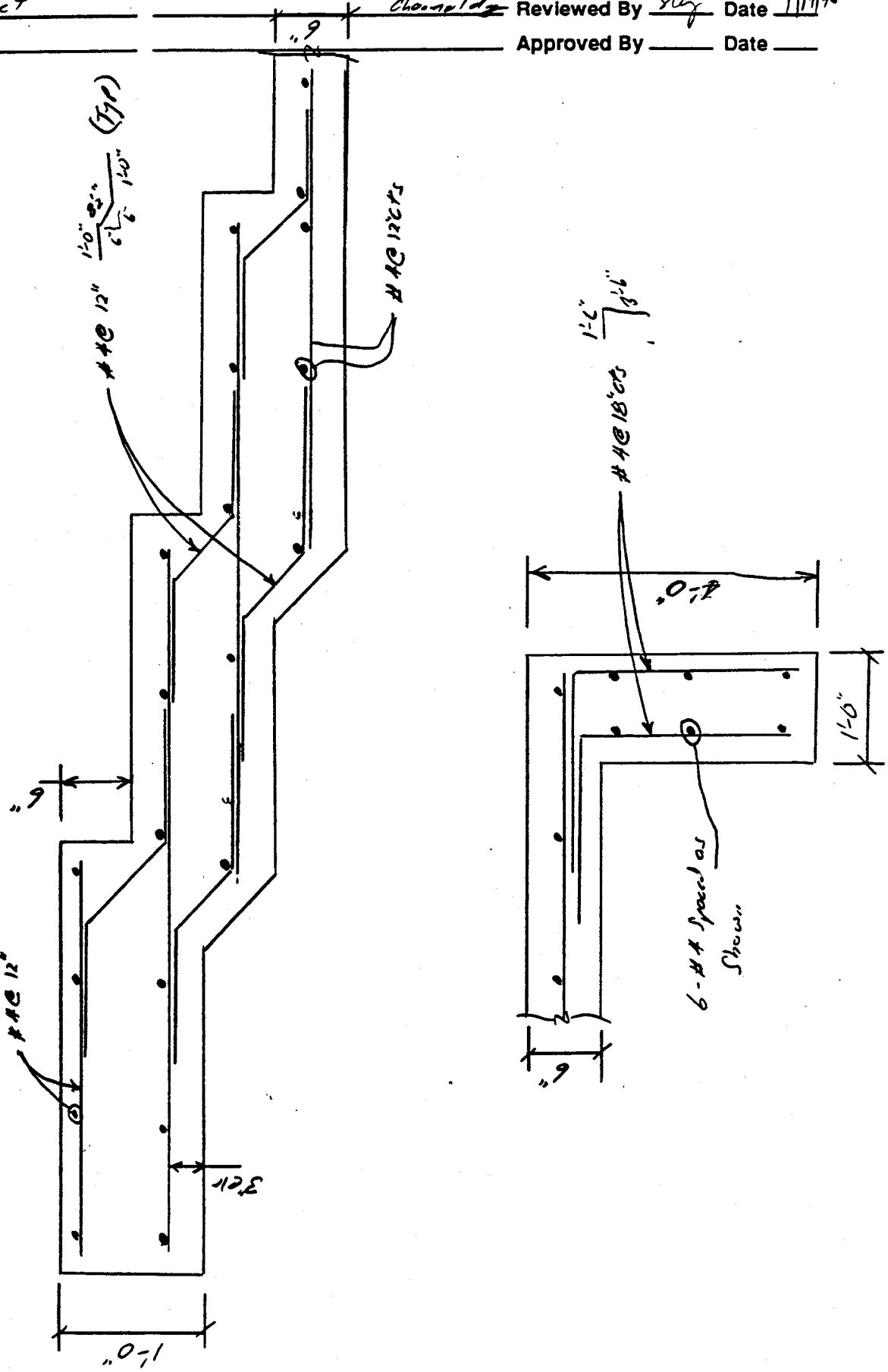

Design of Drop Inlet Structure

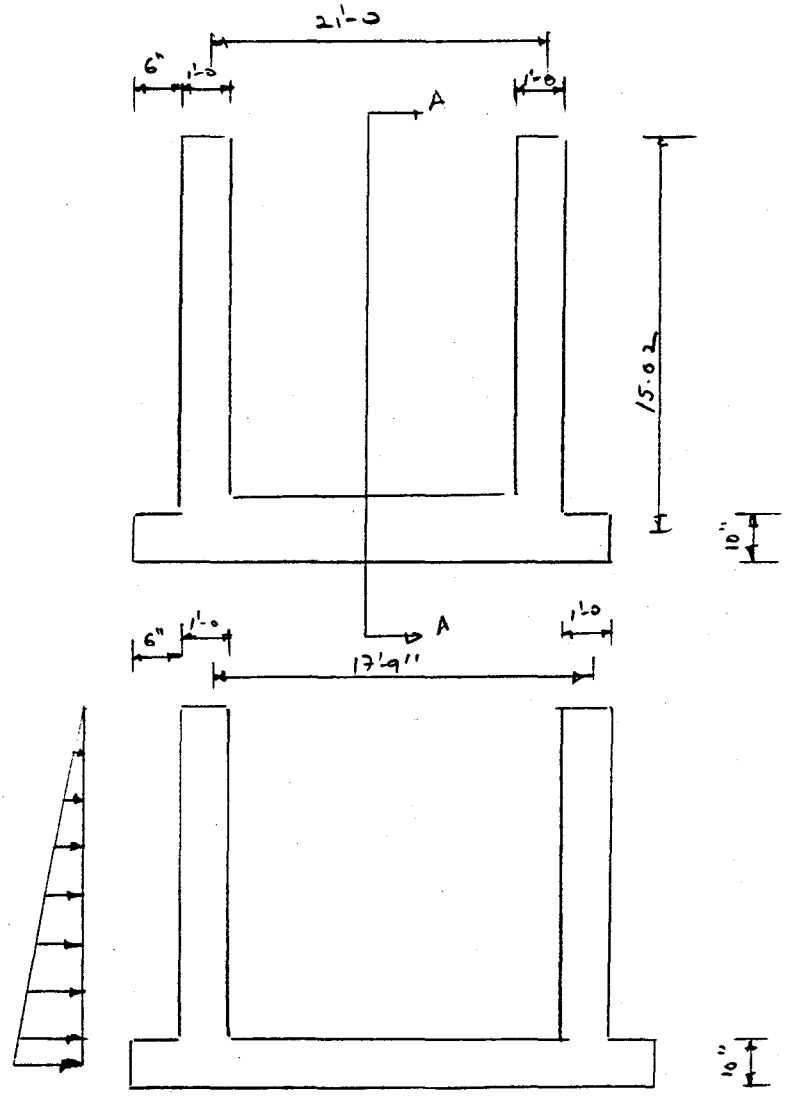

Section A-A.

Case ① – empty structure with backfill

$$\text{Moment}_{V/H} = (\text{Co-eff})\,(0.048)(15.02)^3$$

$$= (\text{Co-eff})[162.65] \quad \text{k-ft}$$

From fig. 4 for $a/b = \frac{21/2}{15.02}$ [long wall]

$= 0.70$

from table

interpolated Values.

	Co-efficients $a/b = 1/2$	$3/4$	0.70
$+M_y = +M_V$	0.0325	0.0584	0.0532
$-M_y = -M_V$	0.0104	0.0143	0.0135
$+M_x = +M_H$	0.0277	0.0433	0.0402
$-M_x = -M_H$	0.0132	0.0214	0.0198

$M_{V+} = (0.0532)(162.65)$

$= \underline{\underline{8.65 \text{ k-ft}}}$

$M_{V-ve} = (0.0135)(162.65)$

$= \underline{\underline{2.20 \text{ k-ft}}}$

$M_{h+ve} = (0.0402)(162.65)$

$= \underline{\underline{6.54 \text{ k-ft}}}$

$M_{h-ve} = (0.0198)(162.65)$

$= \underline{\underline{3.22 \text{ k-ft}}}$

RUST ENVIRONMENT & INFRASTRUCTURE

CALCULATION SHEET

PAGE 56 OF 121
PROJECT NO. 89932

CLIENT FCDMC
PROJECT 10th Street

SUBJECT Design of Drop Inlet Structure

Prepared By SLG Date 9/20/95
Reviewed By DS Date
Approved By Date

Short wall

$$a/b = \frac{17.75/2}{15.02} = 0.60 < 0.7$$

but use values of long wall.

Exterior loading – Horizontal Moments :-

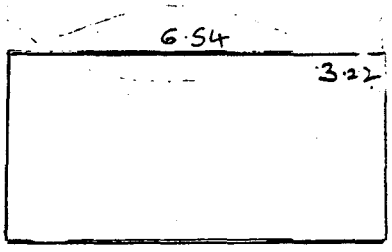

Exterior loading – Vertical Moments :-

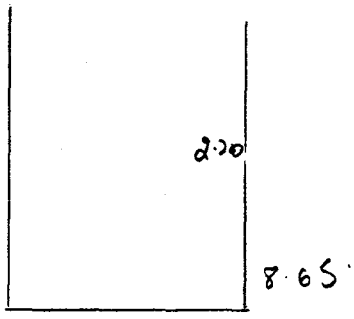

$M_v = 8.65$ k-ft

$d = 12 - 2 - 0.875/2 = 9.5625''$

assume #7 @ 9'' $\Rightarrow \rho = 0.8/(12)(9.5625) = 6.97\times10^{-3}$; $n = 9$

$$k = \sqrt{2\rho n + (\rho n)^2} - \rho n$$
$$= \sqrt{(2)(6.97\times10^{-3})9 + [(6.97\times10^{-3})9]^2} - (6.97\times10^{-3})9$$

$k = 0.2969 \Rightarrow j = 0.90$

$$A_s = \frac{M_s}{f_s j d} = \frac{(8.65)(12)}{(24)(0.9)(9.5625)}$$

$= 0.51 \text{ in}^2$

but use #7 @ 9'' > ρ_{min} o.k.

$M_{v\text{-}ne} = 2.20$ k-ft

$d = 12 - 2 - 0.5/2 = 9.75''$ $\Rightarrow \rho = 0.27/(12)(9.75) = 2.3\times10^{-3}$, $n = 9$

$k = \sqrt{2(2.3\times10^{-3})9 + [(2.3\times10^{-3})9]^2} - (2.3\times10^{-3})9$

$k = 0.1838 \Rightarrow j = 0.94$

$$A_s = \frac{M_s}{f_s j d}$$

$$= \frac{(2.20)(12)}{(20)(0.94)(9.75)} = 0.14 \text{ in}^2$$

$A_{s\,min} = 4/3(A_s \text{ required}) = (0.2)$

$\Rightarrow$ use #4 @ 9''

$M_{H+ve} = 6.54$ k-ft

$d = 12 - 2 - 0.875 - 0.625/2$

$d = 8.8125''$

$\Rightarrow \rho = \frac{A_s}{bd} = \frac{0.62}{(12)(8.8125)} = 5.86\times10^{-3}$; $n = 9$

$K = \sqrt{(2)(5.86\times10^{-3})9 + [(5.86\times10^{-3})9]^2} - (5.86\times10^{-3})9$

$= 0.2363 \Rightarrow j = 0.91$

$A_s = \frac{M_s}{f_s j d} = \frac{(6.54)12}{(20)(0.91)8.8125}$

$= 0.50 \text{ in}^2$

$\Rightarrow$ provide #5@6" > ρ_{min} o.k

$M_{H-ve} = 3.22$ k-ft

$\Rightarrow d = 12 - 2 - 0.5 - 0.625/2$

$= 9.1875$

$\Rightarrow \rho = \frac{0.31}{(12)(9.1875)} = 2.81\times10^{-3}$, $n = 9$

$\Rightarrow K = \sqrt{(2)(2.81\times10^{-3})9 + [(2.81\times10^{-3})9]} - (2.81\times10^{-3})9$

$K = 0.20, \Rightarrow j = 0.93$

$A_s = \frac{M_s}{f_s j d} \Rightarrow \frac{(3.22)(12)}{(20)(0.93)(9.1875)}$

$= 0.23 \text{ in}^2$

$\Rightarrow$ use #5@12" > $A_{min} = (0.23)4/3$

$= 0.30$

o.k

Design of base slab:-

Assume there is no unbalanced hydrostatic force present [water table is below the base slab]

loading on the slab = load of grating + weight of walls + weight on slab.

grating load = $(30)[(16.75)(20)] = 10,050$ lbs.

slab dead load = $\left[\left(\frac{15}{12}\right)150\right]\left[(18.75+1)(23)\right] = 85,172$ lbs

wall dead load = $(1)(150)\left[2\times 18.75 + 2\times 20\right]\left(\frac{14.61+9.92}{2}\right) = 142,580$ lbs.

Soil = $\left(\frac{6}{12}\right)\left(\frac{14.35+9.92}{2}\right)\left(2\times 18.75+2\times 22\right)(143.0) = 70,715.00$ lbs

Total load = 308517 lbs.

Upward reaction on the slab = $\frac{308517}{(19.75)(23)} = 679.18$ psf

$\simeq$ 680 psf

minimum thickness of slab = $\frac{l}{33} < t < \frac{l}{28}$

$\Rightarrow \frac{20\times 12}{33} < t < \frac{20\times 12}{28}$

$\Rightarrow 7.27 < t < 8.57 \Rightarrow$ here $t = 10''$

Consider long & short direction

deflection at center is same in both directions.

$$\frac{\cancel{5}w_1 l_1^2}{\cancel{384EI}} = \frac{\cancel{5}w_2 l_2^2}{\cancel{384EI}}$$

$$\Rightarrow w_1 = (w_2)\frac{l_2^2}{l_1^2}; \quad \text{but } w_1 + w_2 = 680 \text{ psf}$$

$$w_2 + \frac{(21)^2}{(17.75)^2} w_2 = 680$$

$$\Rightarrow w_2 = 283.37 \text{ lbs.}$$

$$w_1 = 396.63 \text{ lbs}$$

$$M_1 \text{ center} = w_1 l_1^2/8 = (396.63)\frac{(17.75)^2}{8} - (187.5)(17.75)^2/8$$

$$= 8236.13/1000$$

$$= 8.24 \text{ k-ft/ft}$$

$$M_2 \text{ center} = (283.37 - 187.5)(21)^2/8 / 1000$$

$$= 5.28 \text{ k-ft/ft-width.}$$

use $M_s = 8.24$ k-ft.

$$d = 15 - 2 - 0.875/2 = 12.5625$$

$$A_s = \frac{M_s}{f_s jd} \Rightarrow \frac{(8.24)(12)}{(24)(0.92)(12.5625)}$$

$$= 0.36 \text{ in}^2$$

$$A_{min} = (4/3)(0.36) = 0.48 \text{ in} \Rightarrow \text{use \#7@9''}$$

$$\rho = \frac{0.60}{(12)12.5625} = 3.98 \times 10^{-3}$$ (assume #7@12")

$$k = \sqrt{2\rho n + (\rho n)^2} - \rho n$$

$$= \sqrt{(2)(3.98\times10^{-3})9 + ((3.98\times10^{-3})9)^2} - (3.98\times10^{-3})9$$

$$k = 0.23 \Rightarrow j = 0.92$$

patch side wall

RUST **Rust Environment & Infrastructure**

CALCULATION SHEET

PROJECT NO. 99932

CLIENT FCDMC SUBJECT Drop Inlet Structure Prepared By DL Date 01/05/96

PROJECT 10th Street Wash Reviewed By SLG Date 1/22/96

Approved By _____ Date _____

Horizontal Force produce by grate & HS20 loading

Grid - 15.6#/sqFT * 15.5 * 17.83 = 4311.29 #

Steel beam - 58#/ft * 18.4167 * 3 = 3205 #

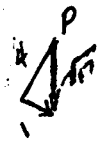

Live load = $\frac{64000\# * 1.3}{90,716\# * \frac{1}{\sqrt{17}}}$ = 22002#/3 = 7,334#

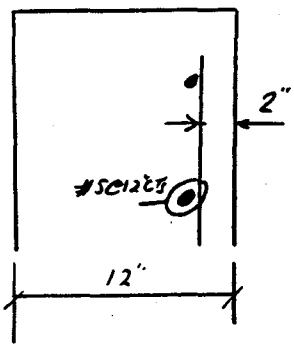

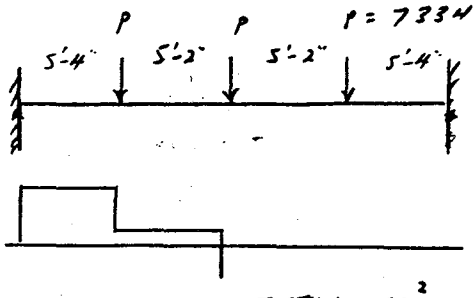

$$M = \frac{7.334\# * 21}{8} + \frac{7.334\# * 5.33^2}{213} * (3 * 15.67 + 5.33)$$

$$= *10.5 - \frac{7.334 * 5.33 * 15.67^2}{21^2}$$

$$= \frac{7.334\# * 15.67^2}{21^2}(15.67 + 3 * 5.33)10.5 - \frac{7.334 * 15.6 * 5.33}{21^2}$$

$$A_s = \frac{M_s}{f_s j d} = \frac{527 * 12}{24 * 0.9 * 9.75} = 3.167 \text{ in}^2/2$$ provide reinf in both walls

= 1.58 in² use 3-#7 bars

width of beam = 8" + 6 + 6 = 20" 0.75 l_b = $A_{s\,max}$ = 2.97 in²

V = 11,000 #/2 = 5000

$V_c = 0.95\sqrt{3000} * 12 * 8.375$

= 5580.6 #

$A_v = \frac{50\, b_w s}{f_y} = \frac{50 * 12 * 12}{60,000} = 0.12$

$\frac{(11000 - 5580.6)12 * 12}{4000\,(8.93.75)12}$

0.30 31

scale: 4 sq./inch

provide #5@12" cs Conservative because of bend down not reduce by 1/2 (Avoid diagonal tension failure)

Bearing stress

two axles on structure

$90.7 / 3$ beams $= 30.2$ kips

Vertical force $= 30.2 * \frac{4}{4.123} = 29.3^k$

Horiz. force $= 30.2 * \frac{1}{4.123} = 7.72^k$

$0.3 * 300 = 900$

Vert. Bearing $= \frac{29.3}{6'' * 8.22} = 0.594$ ksi < 0.9 ksi

End Bearing $= \frac{7.72}{[(8.75-0.8142)(0.51)+(8.22*0.8142)]} = 0.46$ ksi < 0.9 ksi

Very Conservative Check

Actual Max. load $= 4311.29/4/2 + 3205/3/2 + 16 + 16 * \left(\frac{17.83-14}{17.83}\right)$

$= 20.5$ kips $<<$ 30.2 kips ok

CLIENT FCDMC

SUBJECT Drop Inlet Structure

Prepared By SLG Date 9/18/95

PROJECT

Reviewed By DJ Date

Approved By Date

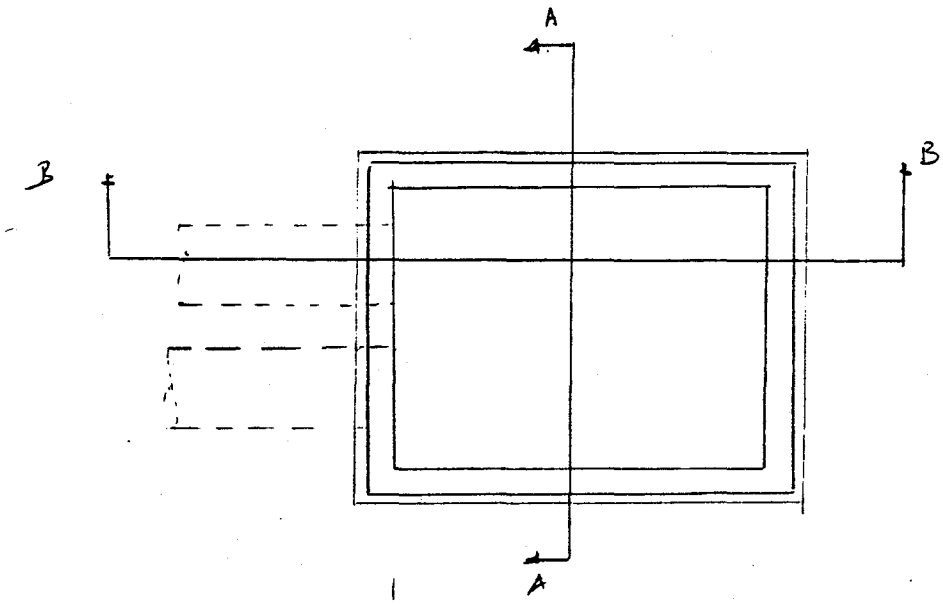

$M_2 = 5.28$ k-ft

$d = 15 - 2 - 0.875 - 0.625/2 = 11.8125$

$A_s = \frac{M_1}{f_s jd} = \frac{(5.28)(12)}{(20)(0.90)(11.8125)}$

$= 0.29$ in²

⇒ use #5@12" in long direction

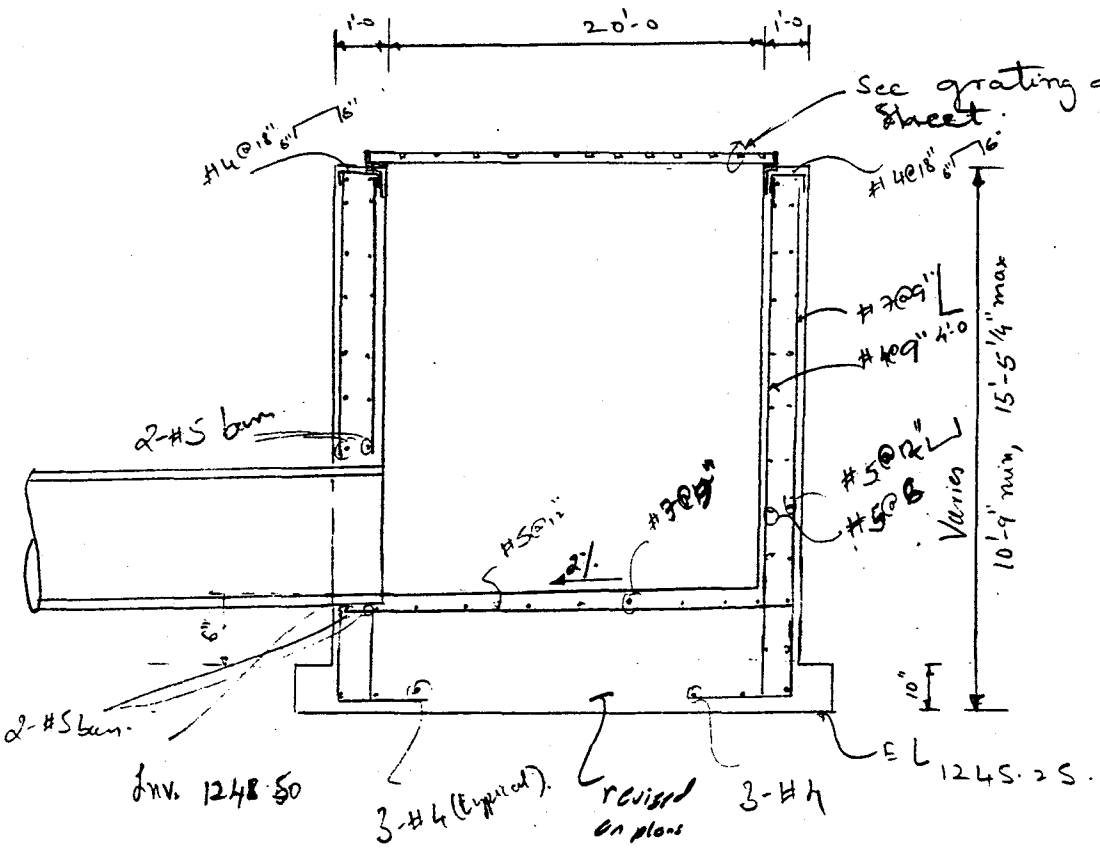

revised details at top on plans

Section B-B

CLIENT FCDMC

SUBJECT Drop Inlet Structure

Prepared By SLG Date 9/12/92

PROJECT

Reviewed By DJ Date

Approved By Date

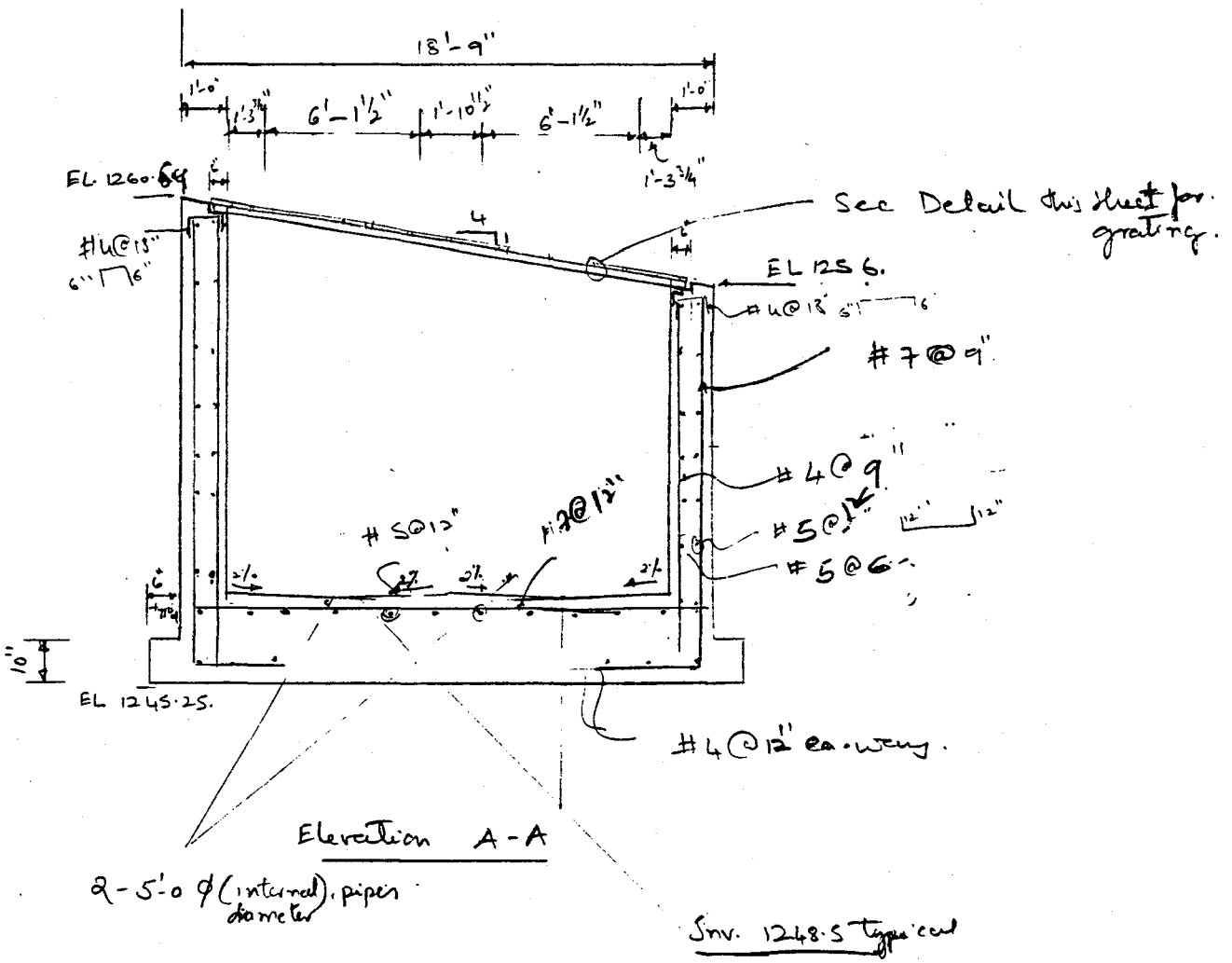

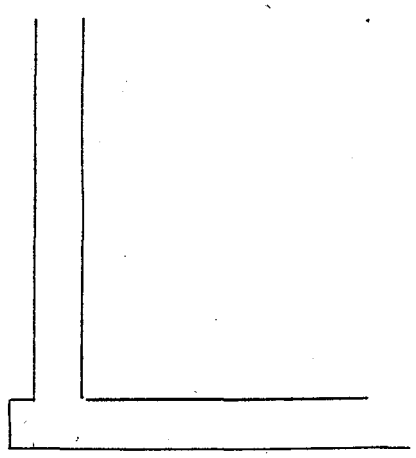

STRUCTURE DATA

TYPE = SPACE

NJ = 521

NM = 0

NE = 500

NS = 8

NL = 4

XMAX= 0.0

YMAX= 0.0

ZMAX= 0.0

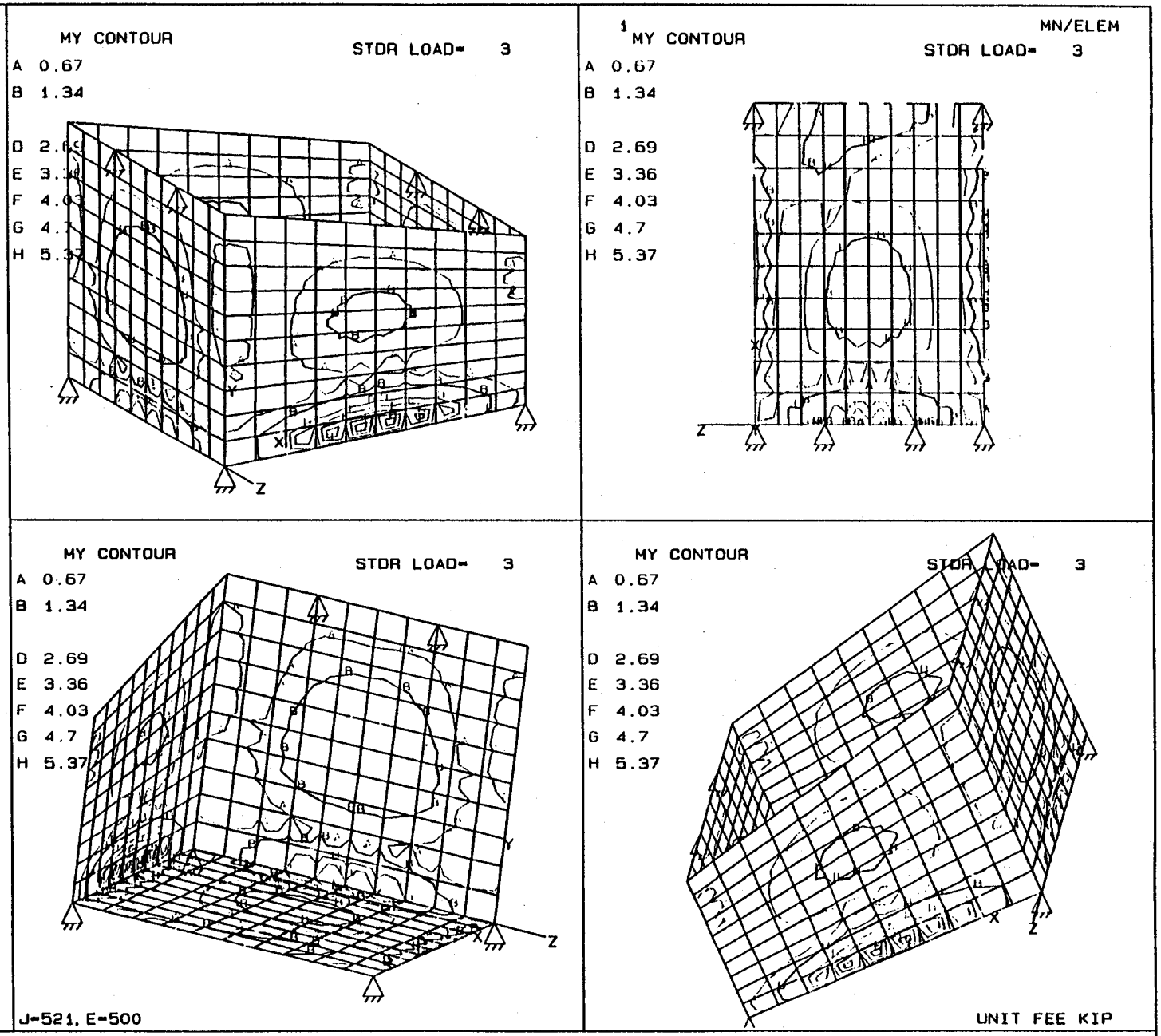

COMPANY: RUST E&I

S T A A D P L - P L O T (REV: 19.0)

DATE: JAN 7, 1996

TITLE: TANK STRUCTURE WITH

121059

STRUCTURE DATA

TYPE = SPACE

NJ = 521

NM = 0

NE = 500

NS = 8

NL = 4

XMAX= 0.0

YMAX= 0.0

ZMAX= 0.0

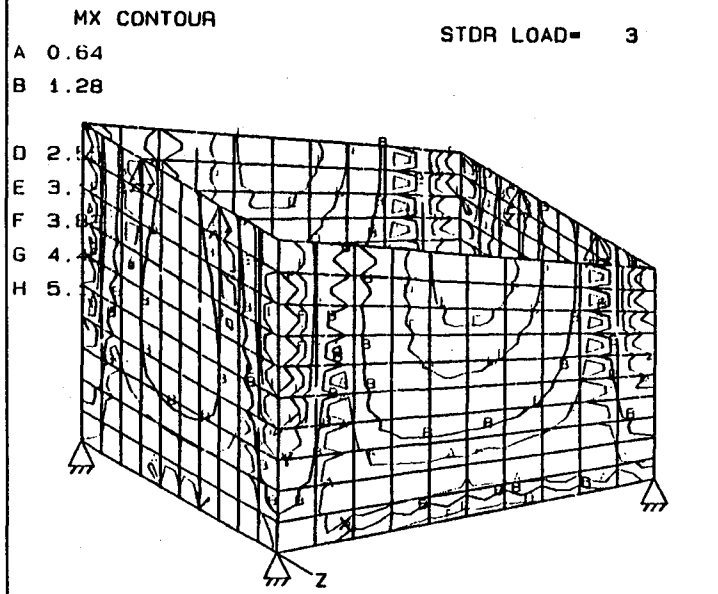

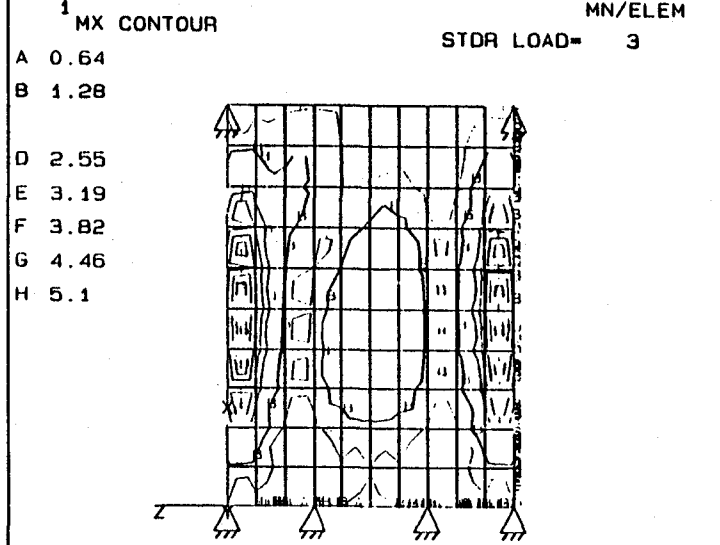

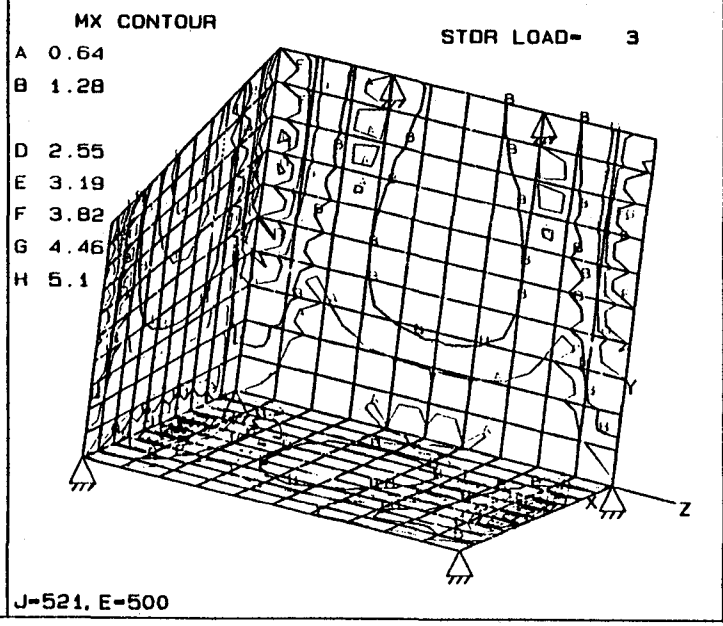

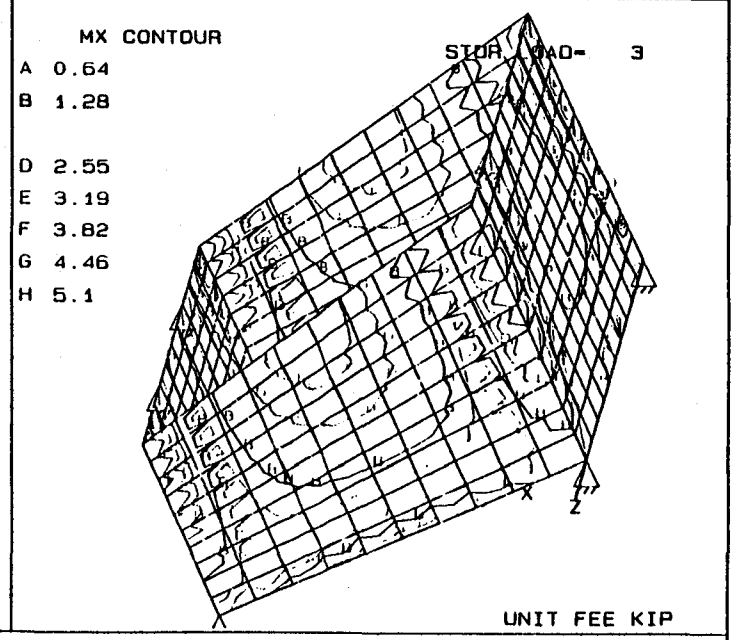

COMPANY: RUST E&I

S T A A D P L - P L O T (REV: 19.0)

DATE: JAN 7, 1996

TITLE: TANK STRUCTURE WITH

CALCULATION SHEET

PROJECT NO. 89932

CLIENT FCDMC

SUBJECT Palma Park CBC Drop Structure

PROJECT 10th St. Wash

Prepared By DS Date 11/16/95

Reviewed By _____ Date _____

Approved By _____ Date _____

Cover

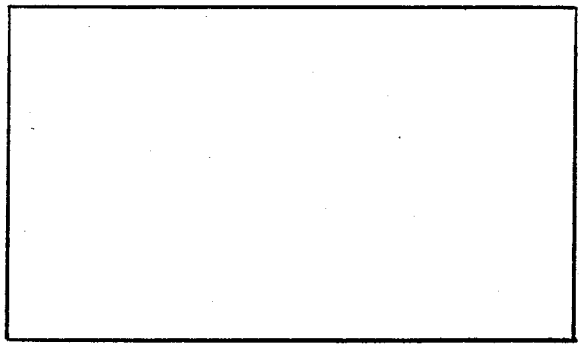

7'-0"

16.83

$D = 7 \times 0.141 + 1.0 \times 0.150$
$= 1.137\ k/sq\,ft$

$16^{k}/(7 \times 10.83)$

$L = 0.211\ k/sq\,ft$

$$\delta = \frac{5wl^4}{384EI} \qquad \delta_1 = \delta_2$$

$$\frac{\cancel{5}(w_1)(10.83)^4\,\cancel{12^4}}{\cancel{384}EI} = \frac{\cancel{5}\,w_2\,(7.0)^4\,\cancel{12^4}}{\cancel{384}EI}$$

$$w_1 = w_2\,\frac{7.0^4}{10.83^4}$$

$w_1 + w_2 = 1.348^k/sq\,ft$

$w_1 = 0.1745\,w_2$

$0.1745\,w_2 + w_2 = 1.348$

$w_2 = 1.148\ k/sq\,ft$

$w_1 = 0.200\ k/sq\,ft$

$\frac{1}{8}wl^2 = \frac{1}{8}(1.148)(7^2) = 70^{1\text{-}k}$

$\frac{1}{8}wl^2 = \frac{1}{8}(0.20)(10.83^2) = 2.93^{1\text{-}k}$

$$A_s = \frac{M_s}{f_s\,jd} = \frac{70 \times 12}{20 \times 0.9(9.625)}$$

$= 0.484 \times \frac{4}{3} = 0.646$

Min $A_s = 0.578^{\square''}/ft$ #6@9" cts

PROJECT NO. 89932

CLIENT FCDMC

SUBJECT Palma Park

PROJECT 10th St. West

Drop Structure

Prepared By DS Date 11/16/95

Reviewed By Sly Date 1/22/96

Approved By _____ Date _____

During Const.

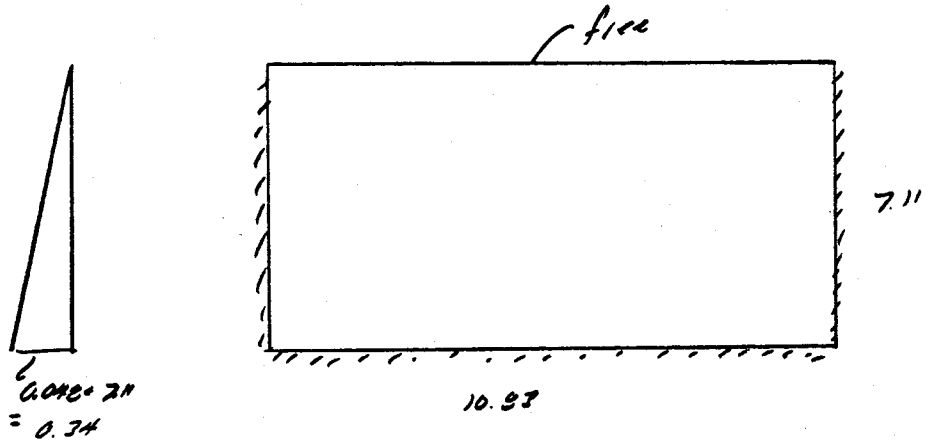

$\frac{a}{b} = 10.93/2/7.11 = 0.76$ $\frac{3}{4}$

$+m_z = \cancel{0.0505} \; 0.0584 \times 0.34 \times 7.11^2 = \cancel{0.87} \; 1.0$

$-m_z = \cancel{0.0192} \; 0.0143 \times 0.34 \times 7.11^2 = \cancel{0.340} \; 0.2458$

$+m_x = \cancel{0.0363} \; 0.0433 \times 0.34 \times 7.11^2 = \cancel{0.55} \; 0.7442$

$-m_x = \cancel{0.0119} \; 0.0214 \times 0.34 \times 7.11^2 = \cancel{0.2045} \; 0.3678$

RUST **Rust Environment & Infrastructure**

CALCULATION SHEET

PROJECT NO. 89932

CLIENT FCDMC

PROJECT 10th St. Wash

SUBJECT Palma Park Drop structure

Prepared By DS Date 11/16/95

Reviewed By Sly Date 1/22/96

Approved By _____ Date _____

After Const. w/ box in place

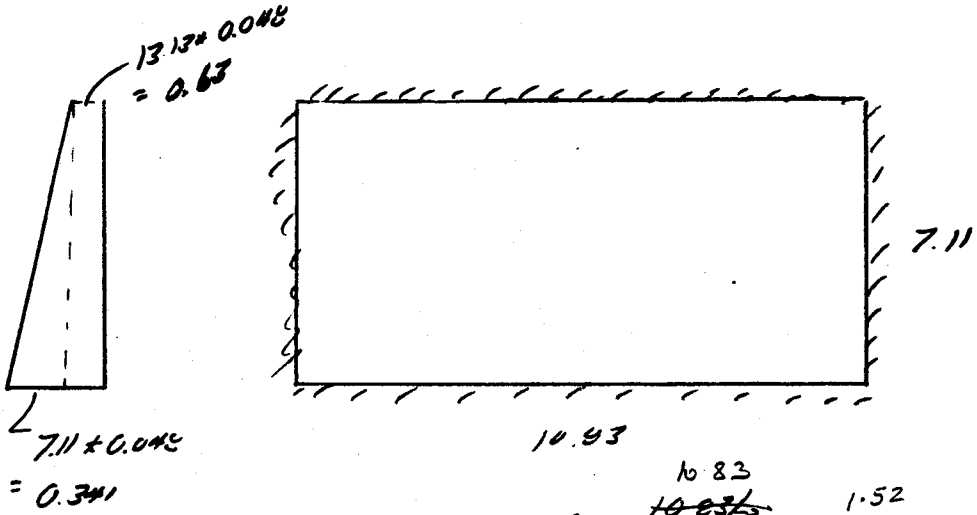

$$\frac{c}{b} = \frac{\cancel{10.83/2}\ 10.83}{7.11} = \cancel{0.76}\ 1.52 \approx \cancel{3/4}$$

use values for a/b = 1.0

$$M_y = (\cancel{0.0546}\ 0.0500 * 0.63) * 7.11^2 * \cancel{0.0505}\ 0.0584 * 0.341 * 7.11^2 = 260$$

RUST **Rust Environment & Infrastructure**

CALCULATION SHEET

PROJECT NO. E9932

CLIENT FCDMC

PROJECT 10th St. Wash

SUBJECT Palma Park Drop Structure

Prepared By DS Date 11/16/95

Reviewed By [illegible] Date 1/22/96

Approved By _____ Date _____

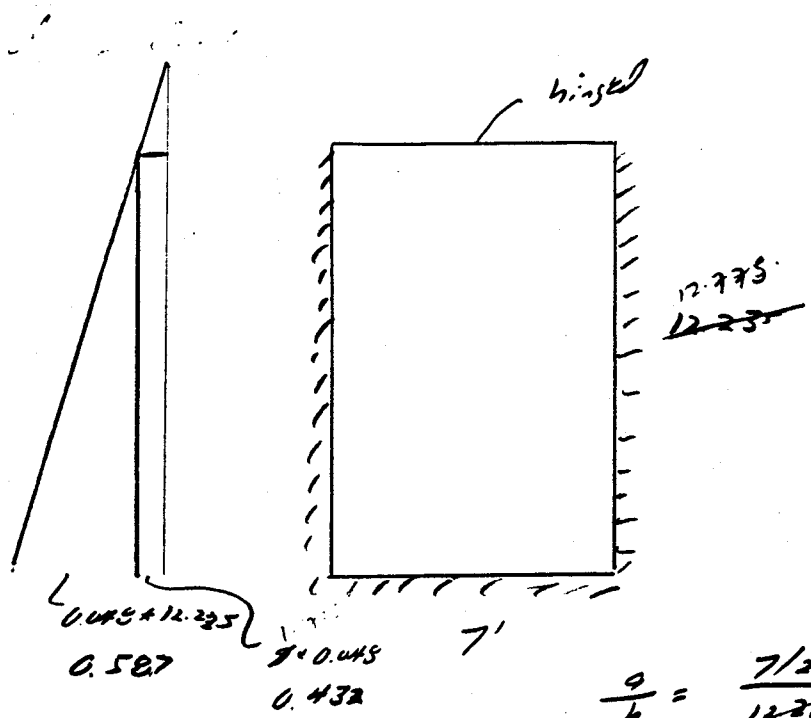

$$\frac{a}{b} = \frac{7/2}{\cancel{12.235}\ 12.775} = 0.29 \text{ sq } \frac{1}{4}$$

$$+M_y = (0.0135 * 0.432 + 0.0107 * 0.587) * \cancel{12.235^2}\ (12.775)^2 = \cancel{1.813}\ 1.98 \text{ 1-k}$$

$$-M_y = (0.0035 * 0.432 + 0.0031 * 0.587) * \cancel{12.235^2}\ (12.775)^2 = \cancel{0.50}\ 0.54 \text{ 1-k}$$

$$M_x = (0.0201 * 0.432 + 0.0114 * 0.587) * \cancel{12.235^2}\ (12.775)^2 = \cancel{2.30}\ 2.51 \text{ 1-k}$$

$$-M_x = (0.0102 * 0.432 + 0.0057 * 0.587) * \cancel{12.235^2}\ (12.775)^2 = \cancel{1.18}\ 1.27$$

RUST **Rust Environment & Infrastructure**

CALCULATION SHEET

PROJECT NO. 89932

CLIENT FCDMC

PROJECT 10th street

SUBJECT Palmer Park Drop structure

Prepared By PS Date 11/16/95

Reviewed By Slg Date 1/22/96

Approved By _____ Date _____

during Const.

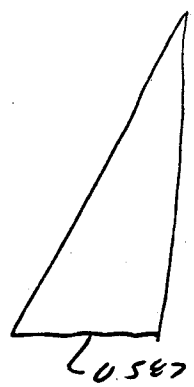

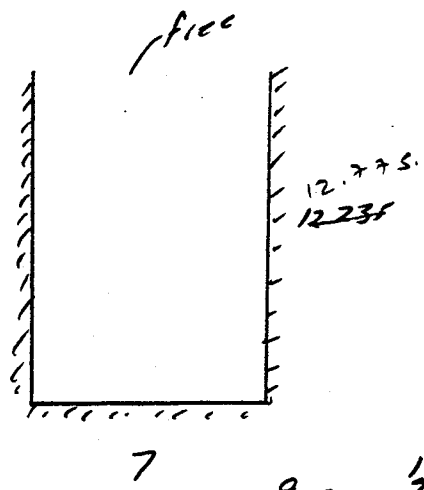

$\frac{a}{b} = \frac{1}{4}$

$+M_y = (0.0107' + 0.587)\,(\cancel{12.235}\ 12.775)^2 = \cancel{0.94}\ 1.03^{1\text{-}k}$

$-M_y = -0.0031' \times 0.587 \times \cancel{12.235}\ (12.775)^2 = \cancel{0.27}\ 0.30^{1\text{-}k}$

$+M_x = 0.0114' \times 0.587 \times \cancel{12.235}\ (12.775)^2 = \cancel{1.00}\ 1.09^{1\text{-}k}$

$-M_x = 0.0057' \times 0.587 \times \cancel{12.235}\ (12.775)^2 = 0.55^{1\text{-}k}$

PROJECT NO. 89932

CLIENT FCDMC SUBJECT Palms Park

PROJECT 10th St. Dog Structure

Prepared By DS Date 11/16/95

Reviewed By [illegible] Date 11/22/96

Approved By _____ Date _____

vert

$$A_s = \frac{3.33 \times 12}{20 \times 0.9\,(12 - 2 - \frac{5}{16})} = 0.230\ \text{in}^2/\text{ft} \times \tfrac{4}{3} = 0.3075$$

$A_{s\,min} = \cancel{0.578}\ \text{in}^2/\text{ft}$ #5 @ 9" cts ✓

vert

$$A_s = \frac{1.49 \times 12}{20 \times 0.9\,(12 - 2 - \frac{4}{16})} = 0.10\ \text{in}^2/\text{ft} \times \tfrac{4}{3} = 0.14$$ #4 @ 9" cts ✓

horiz

$$A_s = \frac{2.71 \times 12}{20 \times 0.9\,(12 - 2 - \frac{5}{8} - \frac{5}{16})} = 0.200 \times \tfrac{4}{3} = \cancel{0.271}\ 0.2667$$

$A_{s\,min} = \cancel{0.5}\ \text{in}^2/\text{ft}$ #5 @ 12" cts ✓

horiz

$$A_s = \frac{1.13 \times 12}{20 \times 0.9\,(12 - 2 - \frac{4}{8} - \frac{4}{16})} = 0.08 \times \tfrac{4}{3} = 0.108$$ #4 @ 12" cts

RUST **Rust Environment & Infrastructure**

CALCULATION SHEET

PROJECT NO. 89932

CLIENT FCDMC

PROJECT 10th St.

SUBJECT Palma Park Drop Structure

Prepared By DS Date 11/16/95

Reviewed By Sly. Date 1/22/96

Approved By _____ Date _____

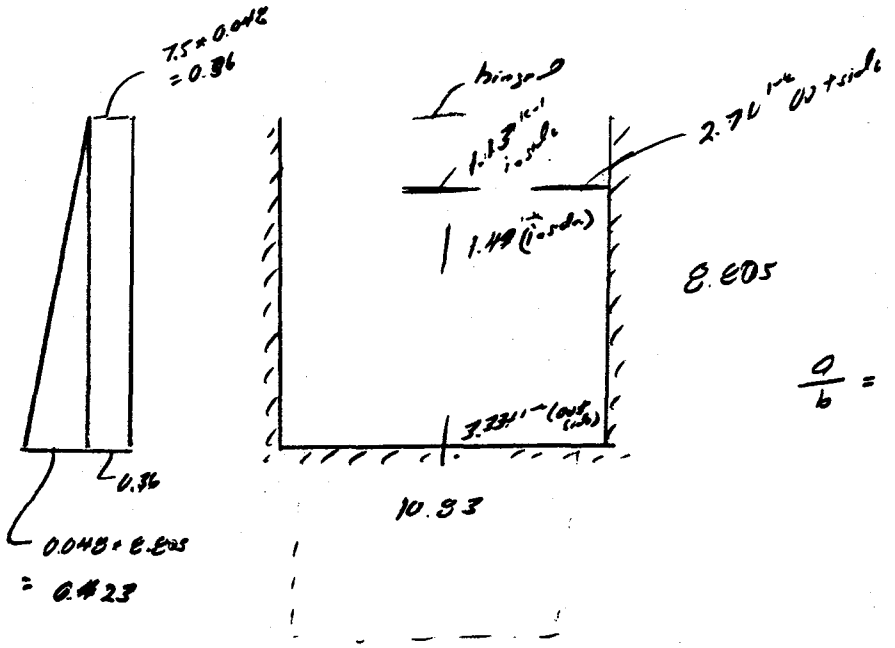

$$\frac{a}{b} = \frac{10.83/2}{8.805} = 0.61$$

say S_8

$$+M_y = \left[(0.0320 + 0.0505)\tfrac{1}{2} * 0.423 + (0.0512 + 0.0898)\tfrac{1}{2} * 0.36\right] * 8.805^2 = 3.33 \text{ in-lb}$$

$$-M_y = \left[(0.0116 + 0.0198)\tfrac{1}{2} * 0.423 + (0.0224 + 0.0473)\tfrac{1}{2} * 0.36\right] * 8.805^2 = 1.49 \text{ in-lb}$$

$$+M_x = \left[(0.0269 + 0.0302)\tfrac{1}{2} * 0.423 + (0.0572 + 0.0695)\tfrac{1}{2} * 0.36\right] * 8.805^2 = 2.71 \text{ in-lb}$$

$$-M_x = \left[(0.0119 + \overset{0.0114}{\cancel{0.0109}})\tfrac{1}{2} * 0.423 + (0.0263 + 0.0274)\tfrac{1}{2} * 0.36\right] * 8.805^2 = 1.13 \text{ in-lb}$$

CALCULATION SHEET

PROJECT NO. 89932

CLIENT FEDMC

PROJECT 10th st.

SUBJECT Palma Park Drop Structure

Prepared By DS Date 11/16/95

Reviewed By _____ Date 11/16/95

Approved By _____ Date _____

Bottom Slab

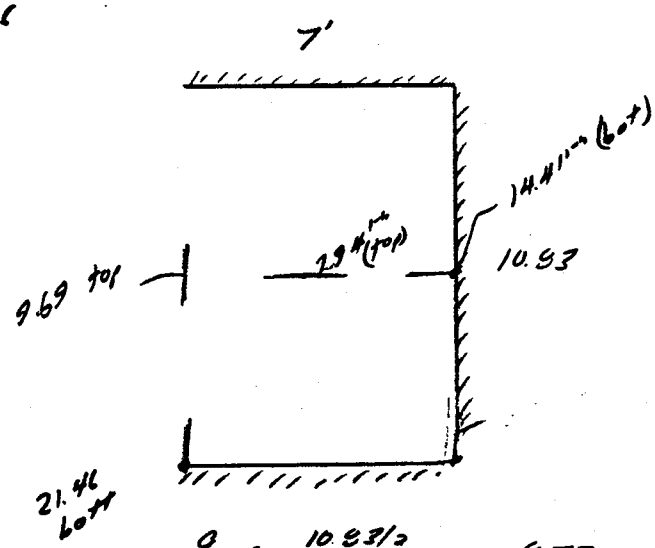

1.0 * 11.67 * 35.66 * 0.15 = 62.42

1.0 * 11.83 * 8.0 * 0.15 = 14.2 ✓

7.0 * 11.83 * 8.0 * (0.14 ft) 93.4

1-wheel load = 32

$\frac{202.02''}{10.83 \times 7} = 2.66^{k}/sqft$

$\frac{a}{b} = \frac{10.83/2}{7} = 0.77$ use $\frac{a}{b} = \frac{3}{4}$

$+M_y = 0.1212 * 2.66 * (7.0)^2 = 15.83^{1-k}$

$-M_y = -0.0245 * 2.66 * (7.0)^2 = 3.20^{1-k}$

$+M_x = 0.1788 * 2.66 * (7.0)^2 = 23.35^{1-k}$

$-M_x = -0.0807 * 2.66 * (7.0)^2 = 10.54^{1-k}$

PROJECT NO. 89932

CLIENT FCDMC

SUBJECT Palms Park

PROJECT 10th St.

Prop Structure

Prepared By DS Date 11/16/95

Reviewed By [illegible] Date 11/22/96

Approved By _____ Date _____

Bottom Slab

$d = 15'' - \frac{7}{8} - 2 = 12.5625$

$A_s = \frac{M_s}{f_s j d}$

$A_s = \frac{15.8 \times 12}{20 \times 0.9 \times 12.5625} = 0.84$ #7 @ 9" cts

$A_s = \frac{23.35 \times 12}{24 \times 0.9 \times (15 - 3 - \frac{7}{8} - \frac{7}{16})} = 1.21$ in²/ft #9 @ 9" cts

$A_s = \frac{10.54 \times 12}{20 \times 0.9 (15 - 2 - \frac{7}{16})} = 0.56$ in²/ft #6 @ 9" cts

STRUCTURE DATA

TYPE = SPACE

NJ = 506

NM = 0

NE = 504

NS = 18

NL = 3

XMAX= 0.0

YMAX= 0.0

ZMAX= 0.0

MY CONTOUR STDR LOAD= 3

A 0.66
B 1.33
D 2.65
E 3.31
F 3.98
G 4.64
H 5.3

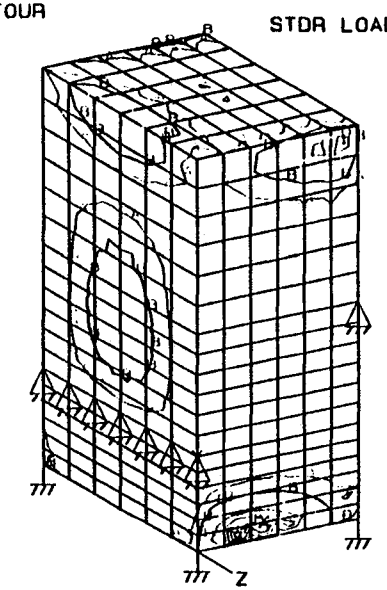

MY CONTOUR MN/ELEM STDR LOAD= 3

A 0.66
B 1.33
D 2.65
E 3.31
F 3.98
G 4.64
H 5.3

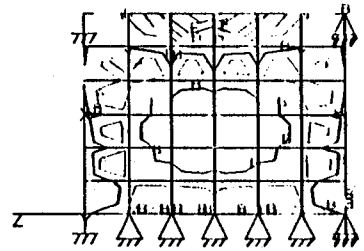

MY CONTOUR STDR LOAD= 3

A 0.66
B 1.33
D 2.65
E 3.31
F 3.98
G 4.64
H 5.3

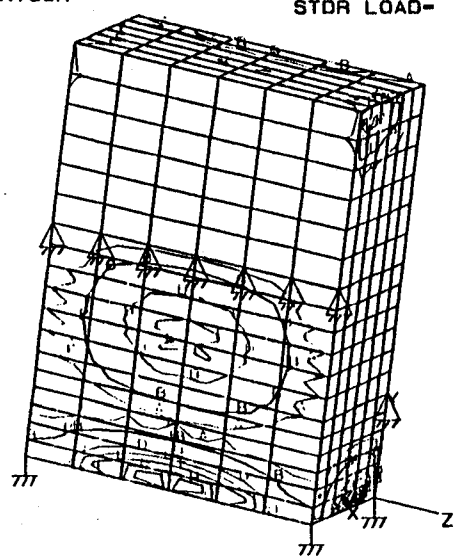

J-506, E-504

1 MY CONTOUR STDR LOAD= 3

A 0.66
B 1.33
D 2.65
E 3.31
F 3.98
G 4.64
H 5.3

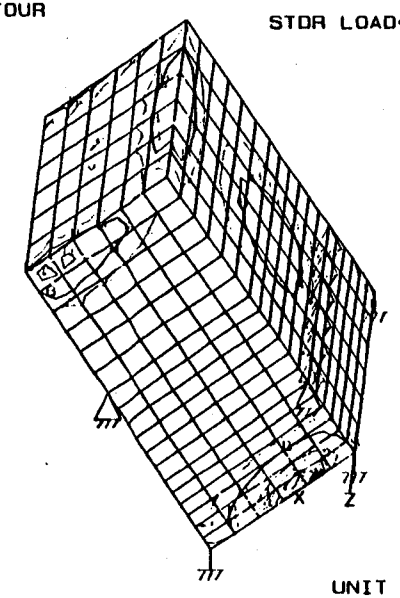

UNIT FEE KIP

COMPANY: RUST E&I

S T A A D P L - P L O T (REV: 19.0)

DATE: JAN 7, 1996

TITLE: TANK STRUCTURE WITH

76 of 121

STRUCTURE DATA

TYPE = SPACE
NJ = 506
NM = 0
NE = 504
NS = 18
NL = 3
XMAX= 0.0
YMAX= 0.0
ZMAX= 0.0

MX CONTOUR
STDR LOAD= 3

A 0.82
B 1.65
D 3.3
E 4.12
F 4.94
G 5.77
H 6.59

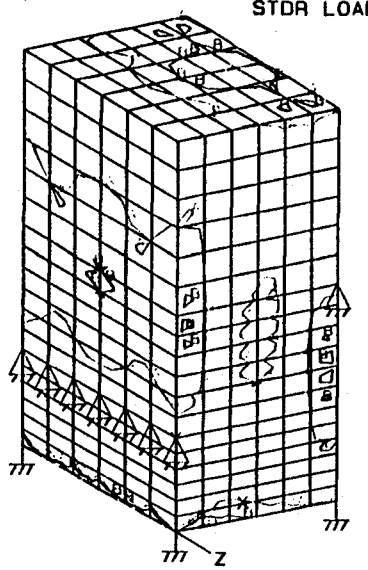

MX CONTOUR
MN/ELEM
STDR LOAD= 3

A 0.82
B 1.65
D 3.3
E 4.12
F 4.94
G 5.77
H 6.59

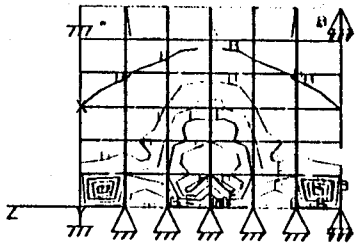

MX CONTOUR
STDR LOAD= 3

A 0.82
B 1.65
D 3.3
E 4.12
F 4.94
G 5.77
H 6.59

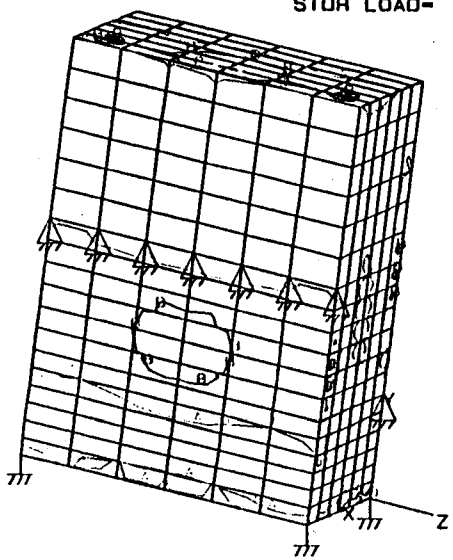

J=506, E=504

1 MX CONTOUR
STDR LOAD= 3

A 0.82
B 1.65
D 3.3
E 4.12
F 4.94
G 5.77
H 6.59

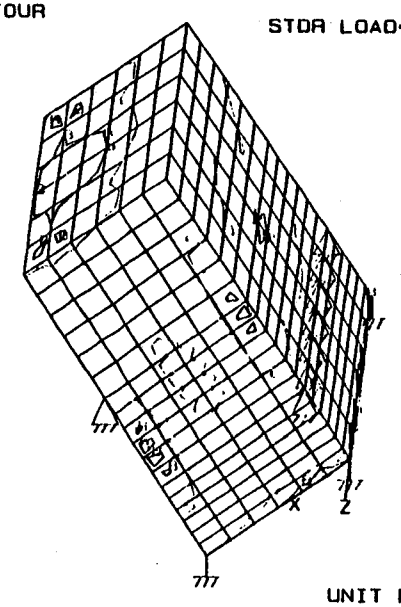

UNIT FEE KIP

COMPANY: RUST E&I

S T A A D P L - P L O T (REV: 19.0)

DATE: JAN 7, 1996

TITLE: TANK STRUCTURE WITH

77 of 121

RUST **Rust Environment & Infrastructure**

CALCULATION SHEET

PROJECT NO. 89932

CLIENT FCDMC

PROJECT 10th st

SUBJECT Palma Park CBC Drop Inlet

Prepared By DS Date 11/17/95

Reviewed By [illegible] Date 1/22/96

Approved By _____ Date _____

Bottom of Slab

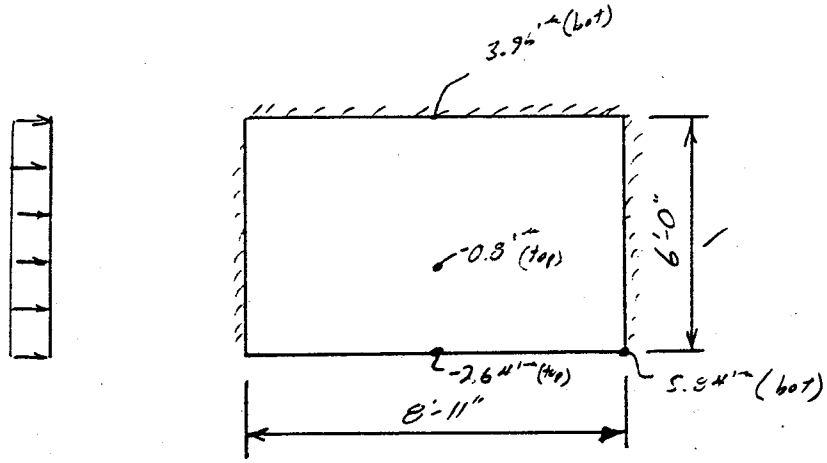

Total vertical load

$\frac{11}{12} * (8+11)\frac{1}{2} * 5.0 * 2 * 0.15 = 13.0$

$1.0 * (8) * 9.83 * 0.15 = 11.8^k$

$1.0 * (11) * 9.83 * 0.15 = 16.2^k$

41.1^k

One set of wheels = 32.0^k

$73.1^k / (7.67 * 10.5)$

$= 0.908^k/\text{sq ft}$

Add grating load.

$\left(\frac{28}{1000}\right)(6)(9) / (7.67 \times 10.5)$

$= 0.0188$

Total $= 0.908 +$

$= 0.9267$

$\frac{a}{b} = \frac{8.92/2}{6.0} = 0.74$ $\qquad \frac{a}{b} \approx 0.75$

$+M_y = 0.1212 * \cancel{0.908}\ 0.9267 * (6.0)^2 = \cancel{3.96}\ 4.04$

$-M_y = -0.0245 * \cancel{0.908}\ 0.9267 * (6.0)^2 = \cancel{6.80}\ 0.82$

$+M_x = 0.1788 * \cancel{0.908}\ 0.9267 * (6.0)^2 = \cancel{5.84}\ 5.96$

$-M_x = -0.0807 * \cancel{0.908}\ 0.9267 * (6.0)^2 = \cancel{2.64}\ 2.69$

CALCULATION SHEET

PROJECT NO. 89932

CLIENT FCDMC

PROJECT 10th st.

SUBJECT Palma Park CBL Drop Inlet

Prepared By DS Date 11/17/95

Reviewed By [illegible] Date 1/23/96

Approved By _____ Date _____

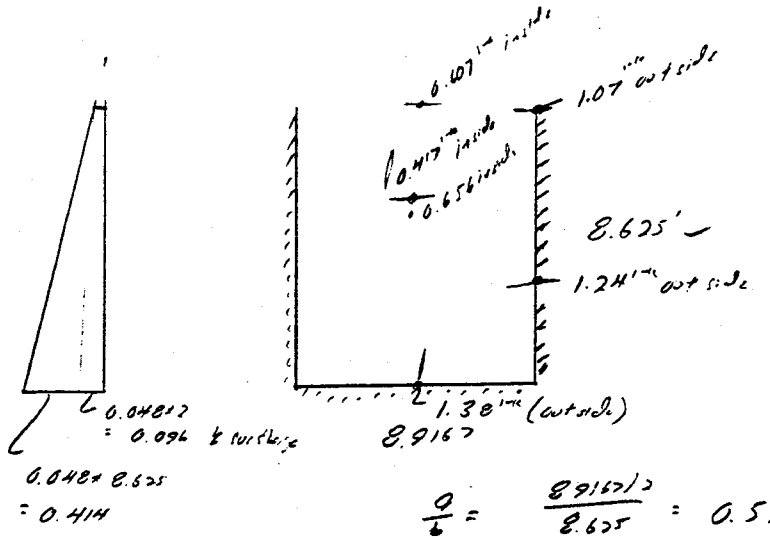

$\frac{a}{b} = \frac{8.9167/2}{8.625} = 0.52$ Say $\approx \frac{1}{2}$

$+M_y = [(0.0534 \times 0.096) + (0.0325 \times 0.414)]\ 8.625^2 = 1.38^{in}$ ✓

$-M_y = [(0.0135 \times 0.096) + (0.0104 \times 0.414)]\ 8.625^2 = 0.417^{in}$ ✓

$+M_x = (0.0852 \times 0.096) + (0.0151 \times 0.414)]\ 8.625^2 = 1.07^{in}$ ✓

(@ 0.4 b) $(0.0545 \times 0.096) + (0.0277 \times 0.414)]\ 8.625^2 = 1.24^{in}$ ✓

$-M_x = [(0.0432 \times 0.096) + (0.0097 \times 0.414)]\ 8.625^2 = 0.607^{in}$ ✓

(@ 0.6 b) $(0.0350 \times 0.096) + (0.0132 \times 0.414)]\ 8.625^2 = 0.656^{in}$ ✓

CALCULATION SHEET

PROJECT NO. 89932

CLIENT FCDMC

PROJECT 10th St.

SUBJECT Palma Park CBC Drop Inlet

Prepared By DS Date 11/17/95

Reviewed By SLG Date 11/23/96

Approved By _____ Date _____

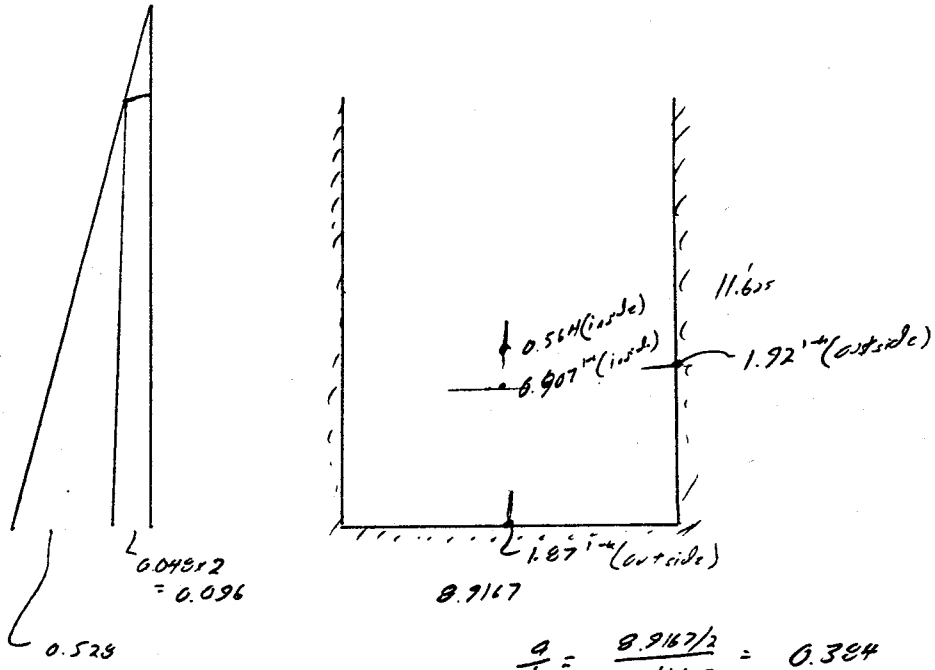

$\frac{a}{b} = \frac{8.9167/2}{11.625} = 0.384$

Use 0.405 by interpolation ok (a little conservative)

$+M_y = [(0.0347 * 0.096) + (0.023 * 0.528)]\ 11^2 = 1.87^{\text{'-k}}$ ✓

$-M_y = [(0.0095 * 0.096) + (0.0071 * 0.528)]\ 11^2 = 0.564^{\text{'-k}}$ ✓

$+M_x = [(0.0419 * 0.096) + (0.0224 * 0.528)]\ 11^2 = 1.92^{\text{'-k}}$ ✓

$-M_x = [(0.0203 * 0.096) + (0.0105 * 0.528)]\ 11^2 = 0.907^{\text{'-k}}$ ✓

RUST **Rust Environment & Infrastructure**

CALCULATION SHEET

PAGE 81 OF 121

PROJECT NO. E9932

CLIENT FCDMC

PROJECT 10th st

SUBJECT Palma Park CBC Drop I-lot

Prepared By PS Date 11/17/95

Reviewed By Sley Date 1/23/96

Approved By _____ Date _____

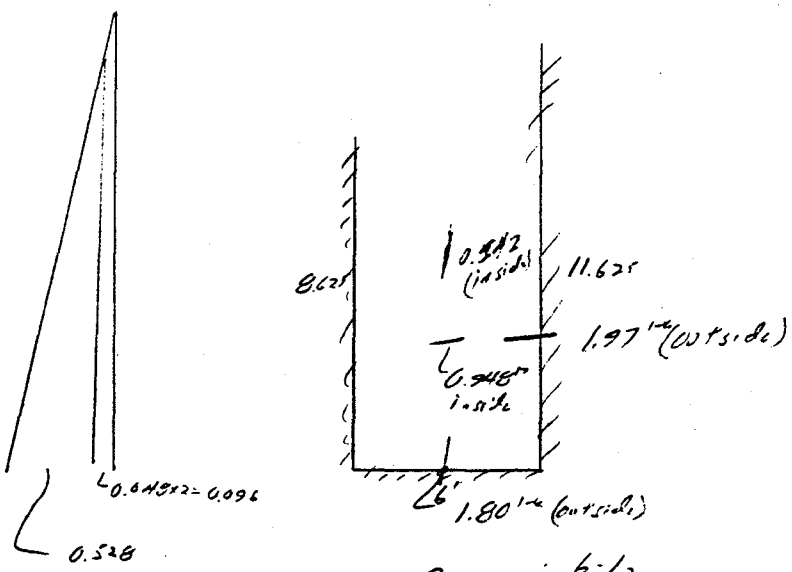

$$\frac{a}{b} = \frac{6/2}{11.625} = 0.25$$

$$\frac{a}{b} = \frac{6/2}{8.625} = 0.34$$

use 3/8"

$$+M_y = ((0.0288(0.096)) + (0.02 * 0.528)]\,11.625^2 = 1.8^{1-k}$$

$$-M_y = [(0.0082(0.096)] + (0.0061 * 0.528)]\,11.625^2 = 0.542^{1-k}$$

$$M_x = [(0.0379 * 0.096) + (0.0208 * 0.528)]\,11.625^2 = 1.97^{1-k}$$

$$-M_x = [(0.0186 * 0.096) + (0.0099 * 0.528)]\,11.625^2 = 0.948$$

Rev. 11/94 scale: 4 sq./inch F051/General

RUST **Rust Environment & Infrastructure**

CALCULATION SHEET

PROJECT NO. 99932

CLIENT FCDMC

PROJECT 10th St

SUBJECT Palma Park CBC Drop Inlet

Prepared By DS Date 11/17/95

Reviewed By [illegible] Date 11/23/96

Approved By _____ Date _____

Bottom [illegible]

$d = (1'-3") - 3" - \frac{6}{16}$

$= \cancel{[illegible]}$ 11.625

$A_s = \frac{M_s}{f_s j d} =$

$A_s = \frac{\cancel{3.96}\ 4.04 \times 12}{20 \times 0.9 \times \cancel{11.625}\ 11.625} = \cancel{0.2259}\ 0.2317 \times \frac{4}{3} = 0.3089$

24 but o.k.

#5 @ 12" cts bottom parall to cols.

but use #6 @ 9"

$d = (1'-3") - 2" - \frac{7}{8} - \frac{6}{16} = 12.625$

$A_s = \frac{\cancel{0.8}\ 0.8 \times 12}{0.4 \times 20 \times 0.9 \times \cancel{11.625}\ 12.625} = 0.045 \times \frac{4}{3} = 0.0602$

24

#5 @ 12" cts

use #6 @ 9"

$d = 1'-3" - 3" - 6/8 - 6/16 = 10.875$

$A_s = \frac{\cancel{5.64}\ 5.96 \times 12}{0.4 \times 20 \times 0.9 \times (\cancel{11.625 - 5/8}\ 10.875)} = \cancel{0.352}\ 0.365 \times \frac{4}{3} = \cancel{0.469}\ 0.487$

24

#6 @ 9" cts ok

$d = 1'-3" - 2" - \frac{5}{16} = 12.6875$

$A_s = \frac{\cancel{2.64}\ 2.67 \times 12}{20 \times 0.9 \times (12.6875} = 0.1387 \times \frac{4}{3} = 0.185\ \square"/ft$

24

RUST **Rust Environment & Infrastructure**

CALCULATION SHEET

PROJECT NO. 89932

CLIENT FCDMC

PROJECT 10TLST

SUBJECT Palma Park CBC Drop Inlet

Prepared By DS Date 11/17/95

Reviewed By Slg Date 1/23/96

Approved By _____ Date _____

Wall

vertical

outside

$d = 11" - 2" - \frac{7}{16} = \cancel{8.5625}$ 8.625 (6/16)

$A_s = \frac{1.87 \times 12}{20 \times 0.9 \times \cancel{8.5625}\ 8.625} = 0.1445 \times \frac{4}{3} = 0.1941$

0.4 but 24

use #6 @ 9"

inside

$A_s = \frac{0.564 \times 12}{20 \times 0.9 \times \cancel{8.5625}} = 0.044 \times \frac{4}{3} = 0.058$

$11 - 2 - 4/16 = 8.75$

use #4 @ 12"

horiz.

outside

$A_s = \frac{1.97 \times 12}{20 \times 0.9 \times (\cancel{8.5625 - \frac{5}{8}})} = 0.165 \times \frac{4}{3} = 0.2206$

7.9375

$d = 11 - 2 - 6/8 - \frac{5}{16} = 7.9375$

use #5 @ 12"

inside

$A_s = \frac{0.948 \times 12}{20 \times 0.9 \times (\cancel{8.5625 - \frac{5}{8}})} = 0.0796 \times \frac{4}{3} = 0.1062$

$d = 11 - 2 - 4/8 - 5/16 = 8.1875$

use #5 @ 12"

STRUCTURE DATA

TYPE = SPACE
NJ = 521
NM = 0
NE = 500
NS = 15
NL = 9
XMAX= 0.0
YMAX= 0.0
ZMAX= 0.0

MX CONTOUR STDR LOAD= 7

A 0.83
B 1.66
D 3.32
E 4.15
F 4.98
G 5.82
H 6.65

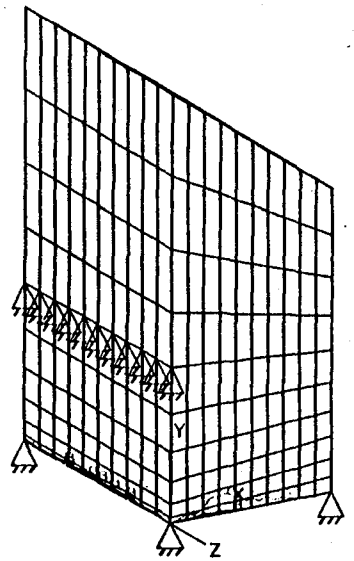

MX CONTOUR STDR LOAD= 7 MN/ELEM

A 0.83
B 1.66
D 3.32
E 4.15
F 4.98
G 5.82
H 6.65

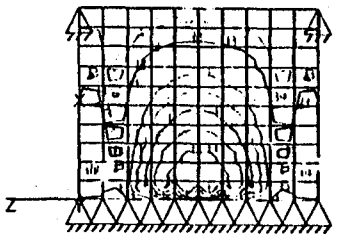

MX CONTOUR STDR LOAD= 7

A 0.83
B 1.66
D 3.32
E 4.15
F 4.98
G 5.82
H 6.65

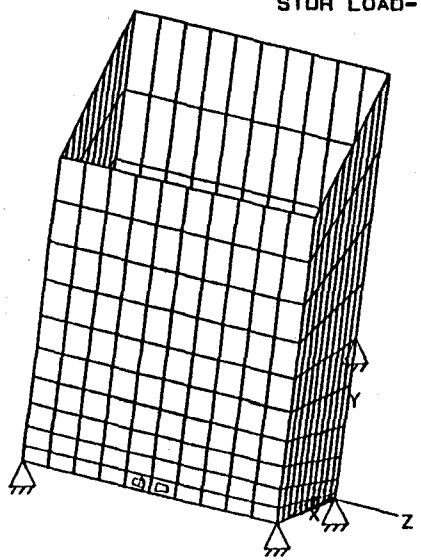

J=521, E=500

1 MX CONTOUR STDR LOAD= 7

A 0.83
B 1.66
D 3.32
E 4.15
F 4.98
G 5.82
H 6.65

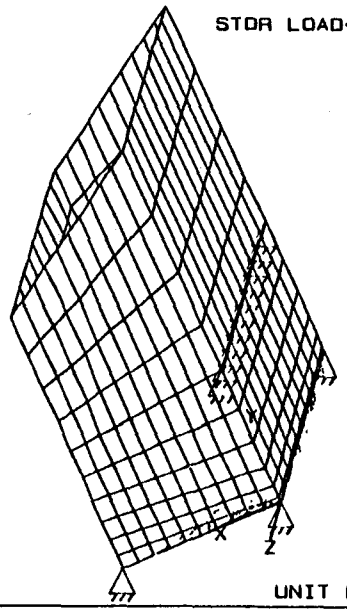

UNIT FEE KIP

COMPANY: RUST E&I

S T A A D P L - P L O T (REV: 19.0)

DATE: JAN 7, 1996

TITLE: TANK STRUCTURE WITH

STRUCTURE DATA

TYPE = SPACE

NJ = 521

NM = 0

NE = 500

NS = 15

NL = 9

XMAX= 0.0

YMAX= 0.0

ZMAX= 0.0

MY CONTOUR

STDR LOAD= 7

A 0.77
B 1.53
D 3.07
E 3.83
F 4.6
G 5.37
H 6.13

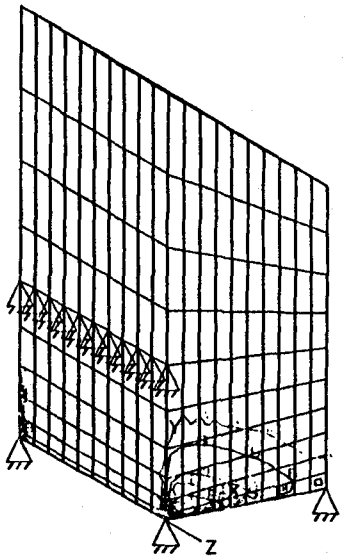

MY CONTOUR

MN/ELEM

STDR LOAD= 7

A 0.77
B 1.53
D 3.07
E 3.83
F 4.6
G 5.37
H 6.13

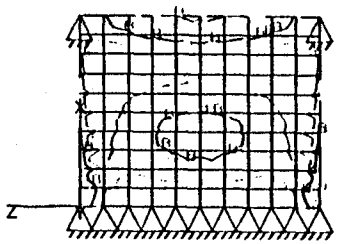

MY CONTOUR

STDR LOAD= 7

A 0.77
B 1.53
D 3.07
E 3.83
F 4.6
G 5.37
H 6.13

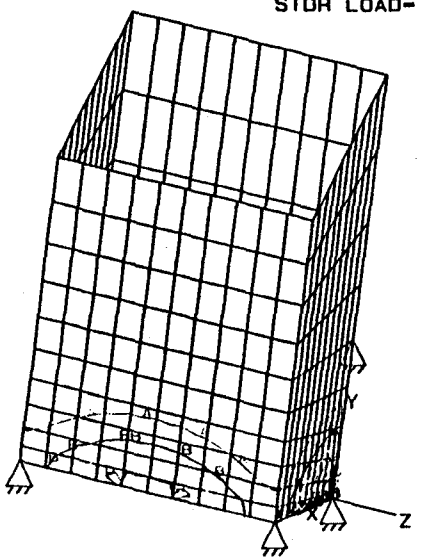

J-521, E-500

1 MY CONTOUR

STDR LOAD= 7

A 0.77
B 1.53
D 3.07
E 3.83
F 4.6
G 5.37
H 6.13

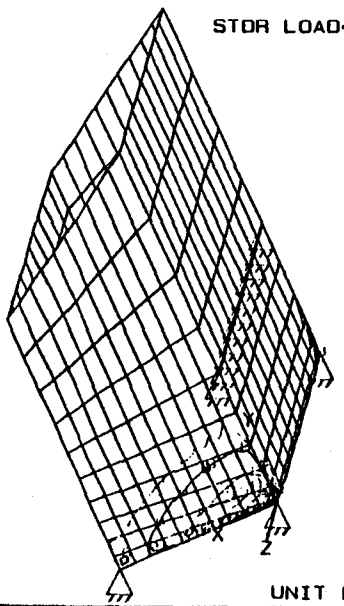

UNIT FEE KIP

COMPANY: RUST E&I

S T A A D P L - P L O T (REV: 19.0)

DATE: JAN 7, 1996

TITLE: TANK STRUCTURE WITH

85 of 121

RUST Rust Environment & Infrastructure

CALCULATION SHEET

PROJECT NO. 89122

CLIENT FCDMC

SUBJECT Palma Park Retaining Wall

PROJECT 10th Street West

Prepared By DS Date 01/29/96

Reviewed By SG Date 1/29/96

Approved By _____ Date _____

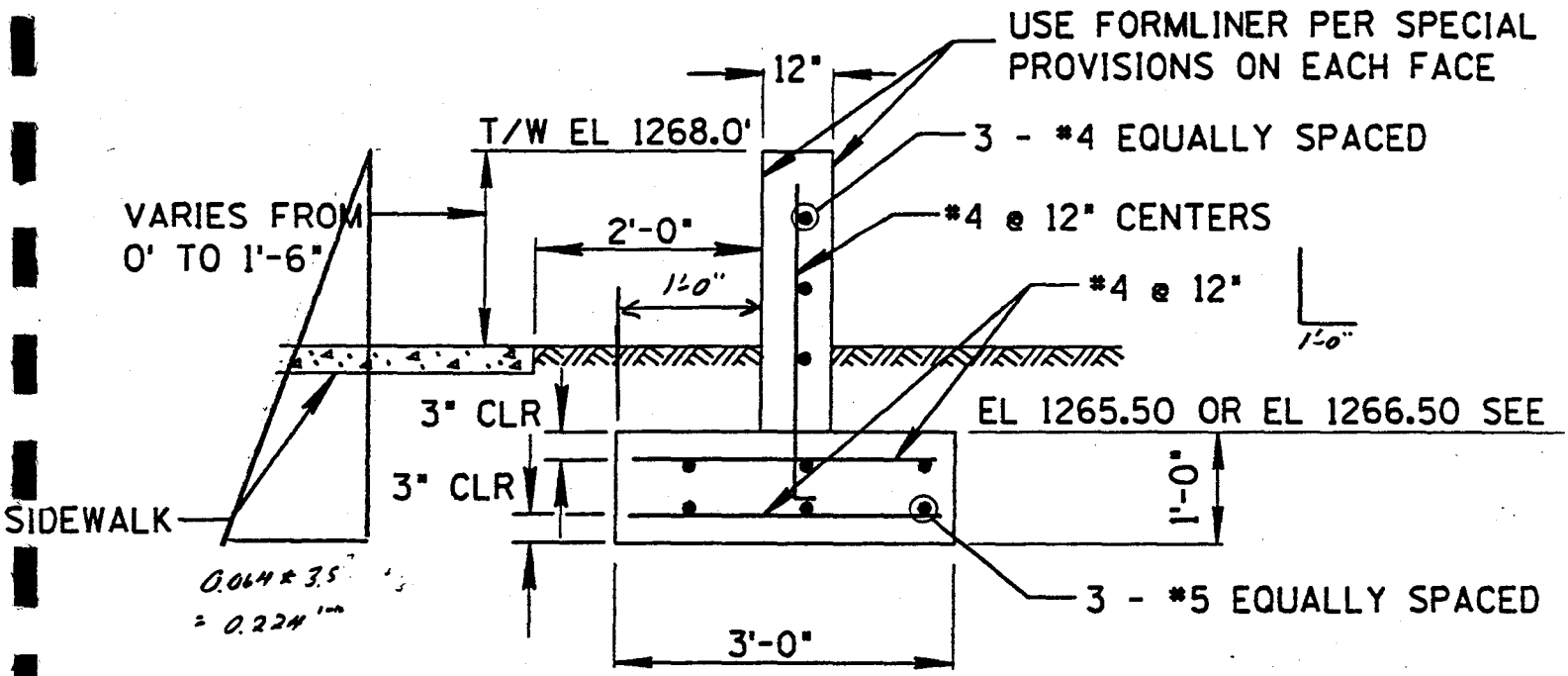

PALMA PARK WALL DETAIL

NTS

Force		Force	Arm	Moment
Footing	3.0 x 1.0 x 0.15 =	0.45 k	1.5	0.675 ft-k
stem	1.0 x 2.5 x 0.15 =	0.375 k	1.5	0.563 ft-k
w/water	0.064 x 3.5² x ½ x ⅓ =	—	—	0.457 ft-k
		0.825 k		0.781 ft-k

$e = 1.5 - \frac{0.781}{0.825} = 0.55' \approx \frac{3}{6} = 0.5$

$F.S. = \frac{1.23k}{0.457} = 2.7$ against overturning

$F.S. = \frac{0.825k \tan\frac{2\times30}{3} + \frac{1}{2}\times143.8\times2^2(3.0)/1000}{0.392} = 3.0$ against sliding

PROJECT NO. 39122

CLIENT FCDMC SUBJECT Palma Park

PROJECT 10th street West Retaining Wall

Prepared By DS Date 01/29/96

Reviewed By sly Date 1/29/96

Approved By _____ Date _____

Stem design

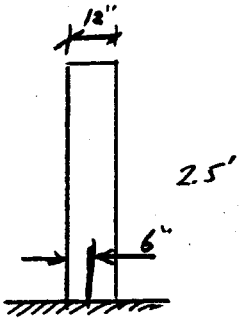

$d = 12" - 6 = 6"$

$M_s = 0.064 * 2.5^3 * \frac{1}{2} * \frac{1}{3}$
$= 0.17^{1-k}$

$A_s = \frac{M_s}{f_s j d} = \frac{0.17 * 12}{20 * 0.9 * 6} = 0.0189^{\square"}/ft * \frac{4}{3} = 0.025^{\square"}/ft$

Use #4@ 12"cts

Footing Design

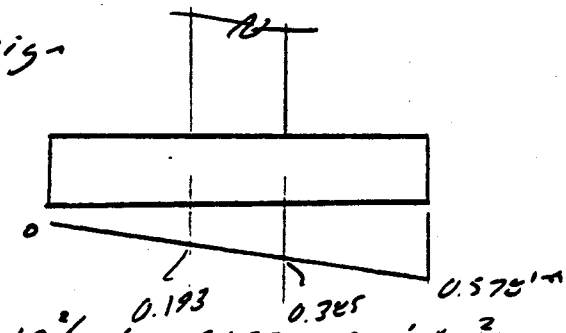

Toe

$M_s = 0.325 * 1.0^2/2 + 0.193 * 1.0 * \frac{1}{2} * \frac{2}{3}$
$- 0.15 * 1.0^2/2$
$= 0.121^{1-k}$

$A_s = \frac{0.121 * 12}{20 * 0.9 * 8.75} = 0.014 * \frac{4}{3} = 0.018^{\square"}/ft$
use #4@12"cts

$P = \frac{0.825}{1.0 * 3.0} \pm \frac{0.825 * 0.55 * 1.5}{\frac{1}{12} * 1.0 * 3^3}$

$= 0.275 \pm 0.303$

$= -0.028$ Sy 0

$= 0.578^{1-k}$

Heel

$M_s = 0.064 * 1.0^2 * \frac{1}{2} * 25 + 0.15 * 1.0^2/2$

$= 0.155^{1-k}$ Conservative

< 0.121 dry by inspection

#4@12"cts

Open Grid Deck

88 of 121

5 Inch RB

5 Inch RB achieves its rigidity and strength from the interlocking of the 5" Special Rolled Main Beams with Secondary Bars and from Supplemental Bars which run parallel to the Main Beam. This design creates a strong deck with simple lines. While only a little heavier than 5-Inch 4-Way, this deck can carry HS-20 loads. This economical design meets the standards of most highway departments.

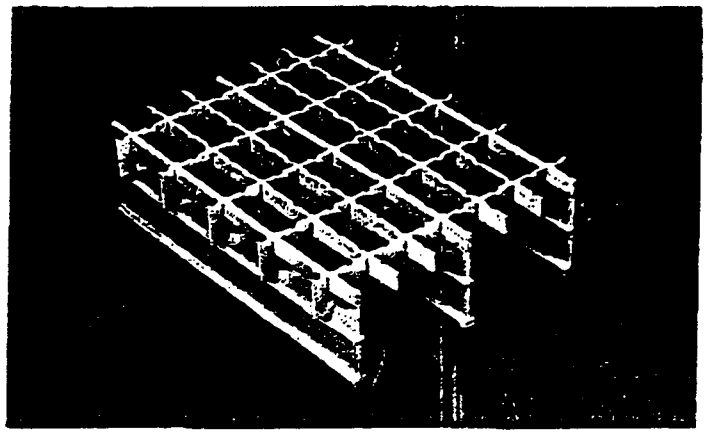

Finish

(A.S.T.M. A-36 steel shall have a prime coat, shop applied.
A.S.T.M. — A-588 steel requires no painting.
Any approved finish may be specified and shop applied.)

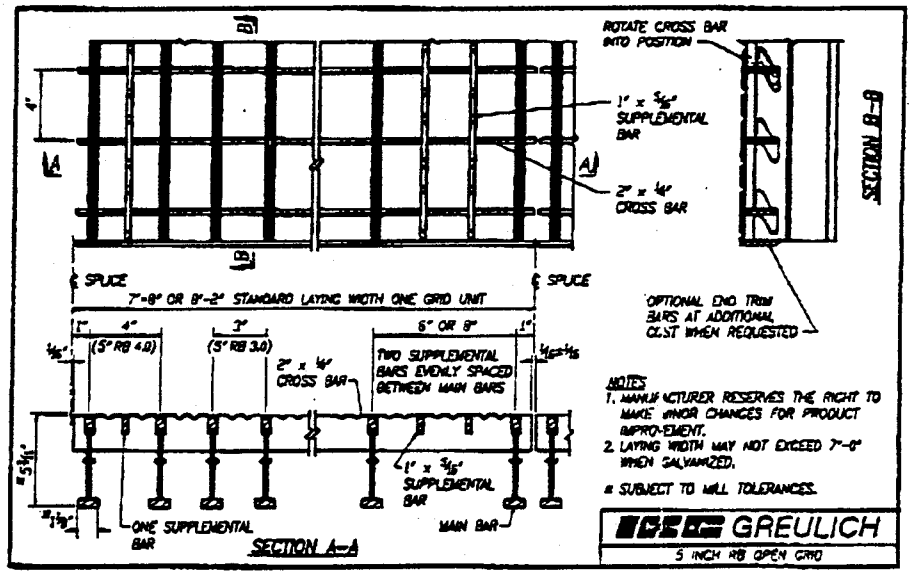

HS 20 Load Tables

MAIN BAR SPACING (in)	SECTION MODULUS (in³/ft)		MAXIMUM CONTINUOUS CLEAR SPAN (ft)		APPROXIMATE WEIGHT (lb/sf)
	TOP STEEL	BOTTOM STEEL	A36	A588	
3	5.522	6.773	5.80	7.85	27.7
4	5.124	5.993	5.75	7.75	23.4
6	4.045	4.583	5.10	6.85	19.3
8	3.034	3.438	4.20	5.70	15.6

RUST **Rust Environment & Infrastructure**

CALCULATION SHEET

PROJECT NO. E9932

CLIENT FCDMC

SUBJECT Grate Assembly supports

PROJECT 10th Street Wash

Prepared By DS Date 12/07/95

Reviewed By SLG Date 1/23/96

Approved By _____ Date _____

W 8x31

Span length = 17.75'

Comment

R $\frac{wl^2}{8} = (0.031 + 0.028 * 5.156)\frac{17.75^2}{8} = 6.87^{k-ft}$ ✓

L+I $M_{L+I} = \cancel{136}^{144^{k-ft}} * \frac{1}{2} * 13 = \cancel{88.4}\ 93.60$

Try W 8x31

$M_s = 6.87 + \cancel{88.40}\ 93.60 = \cancel{95.27}\ 100.47^{k-ft}$

$f_s = \frac{Mc}{I} = \frac{M}{S} = \frac{\cancel{95.27}\ 100.47 * 12}{27.5} = \cancel{41.6}\ 43.84$ ksi > 27 No good

Check if beam is compact.

$b/t = \frac{8.22}{0.810} = 10.15 < \frac{65}{\sqrt{F_y}}$

Try W 8x58

R $\frac{wl^2}{8} = (0.058 + 0.028 * 5.156)\frac{17.75^2}{8} = \cancel{7.69}\ 7.96$

$M_s = \cancel{7.69}\ 7.96 + \cancel{88.40}\ 93.60$

$= \cancel{96.1}\ 101.56^{k-ft}$

unbraced length $= \frac{76b_f}{\sqrt{F_y}} = \frac{76(8.22)}{\sqrt{50}}$

$= 88.8/12 = 7.31' < \approx 7.2'$

$\frac{20000}{(d/A_f)F_y} = \frac{20000}{(8.25/(8.22*0.81))50} = 25'$

$f_s = \frac{Mc}{I} = \frac{M}{S} = \frac{\cancel{96.1}\ 101.56 * 12}{52.0} = \cancel{22.17}\ 23.44$ ksi < ~~27 ksi~~ ok

$0.6 \times 50 = 30$ ksi o.k.

Shear $R = (0.058 + 0.028 * 5.156)\ 17.75/2 = 1.80^k$

$L+I = 1.3 * \cancel{27.1}\ 27.1(\frac{1}{2}) =$

$\cancel{28.9}\ \cancel{24.5}\ 25.42$

$\cancel{26.1}^k\ 27.22$

$V = \frac{\cancel{28.9}\ 27.22}{0.51(7.13)} = \cancel{7.20}\ 7.48^{ksi} < \cancel{0.33 * 50 = 16.5}\ (0.40) * 50 = 20$ ksi ok

use W 8x58

RUST **Rust Environment & Infrastructure**

CALCULATION SHEET

PROJECT NO. 89932

CLIENT FCDMC SUBJECT Quantities Prepared By DS Date 12/06/95

PROJECT 10th st. Wash Reviewed By [illegible] Date 1/23/96

Approved By _____ Date _____

Concrete

Retaining Walls along North & south edge of weir

H * D + B * A

N1 [[9.02 * 1.0 + 1.25 * 5.75] 5.0 + 4.0 * 1.0 * 4.0] = 97.04 Ft³ ✓

N2 [[8.719 + 4.677] ½ * 1.0 + 1.25 * 5.5] * 15.0 = 203.60 ✓

N3 [[8.427 + 4.396] ½ * 1.0 + 1.25 * 5.5] * 15.0 = 199.30 ✓

N4 [[8.229 + 5.0] ½ * 1.0 + 1.167 * 5.5] * 12.0 = 156.38 ✓

N5 [[5.5 + 1.5] ½ * 1.0 + 1.00 * 4.0] * 16.0 = 120.00 ✓

S1 [9.4167 * 1.0 + 1.5 * 7.0] * [1.0 + 7.0 + 30' + 3'-3⅝ + 5.0] = 922.18 ✓ (46'-3⅝)

- 18.25 * 5.75 * 1.0 = -104.94 ✓

S2 [[9.4167 + 5.135] ½ * 1.0 + 1.5 * 7] * 15.0 = 266.64 ✓ (268.93) o.k.

S3 [[8.885 + 4.604] ½ * 1.0 + 1.25 * 5.5] * 15.0 = 204.29 ✓

S4 [[8.427 + 5.00] ½ * 1.0 + 1.25 * 5.5] * 12.0 = 163.06 ✓

S5 [5.0 * 1.0 + 1.0 * 3.5] * 33.0 (30) = ~~280.50~~ 255.00 ✓

S6 [5.5 * 1.0 + 1.0 * 4.0] * ~~14.0~~ (20) = ~~133.00~~ 190

S7 [[5.5 + 1.5] ½ * 1.0 + 1.00 * 4.0] * ~~46.75~~ (43.80) = ~~350.63~~ 328.50

N Walls steps 0.3 * 1.0 * 5.5 + 2.5 * 1.0 * 5.5 + 2.58 * 1.0 * 5.5 + 0.33 * 1.0 * 4.0 = 32.56

S Walls steps 2.25 * 1.0 * 5.5 + 2.58 * 1.0 * 5.5 + 0.5 * 4.0 = 28.57

3052.81 Ft

3062.18

RUST **Rust Environment & Infrastructure**

CALCULATION SHEET

PROJECT NO. 89932

CLIENT FCDMC

SUBJECT Quantities

PROJECT 10th st Wash

Prepared By DS Date 12/06/95

Reviewed By [signature] Date 1/23/96

Approved By _____ Date _____

Retaining walls @ entrance to weir

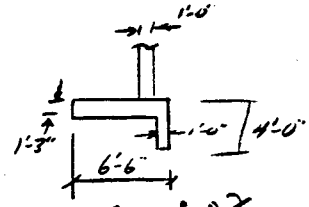

E1 $\left[(\cancel{9.02}\ 9.92)\tfrac{1}{2} * 1.0 + \left[1.25 * 6.5 + 1.0 * (4 - 1.25)\right]\right]$ (10.875) 28.07 ~~27.07~~ = 571.08 ~~550.74~~ Ft³

$(1.25 * 6.5) * 3.0 =$ ~~24.38~~

E2 $\left[(9.02 + 9.92)\tfrac{1}{2} * 1.0 + 10.875\right] * 28.07 =$ 571.08

E3 $\left[(6.0 + 6.9)\tfrac{1}{2} * 1.0 + 10.875\right] * 28.07 =$ 486.31

Step $2.67 * 1.0 * 6.5 =$ 17.36

~~1601.11~~

1645.83

RUST **Rust Environment & Infrastructure**

CALCULATION SHEET

PROJECT NO. 89932

CLIENT FCDMC

SUBJECT Quantities

PROJECT 10th St West

Prepared By DS Date 12/06/95

Reviewed By [illegible] Date 1/23/96

Approved By _____ Date _____

Channel - Weir

Channel

1.0 * 2.0 * 142 =	284.0 Ft^3 ✓
$\sqrt{7^2+2}$ * $\frac{10}{12}$ * 142 =	1166.75 ~~1171.00~~ ✓
~~1.52~~ 1.17 * 3.00 * 142 =	498.42 ~~647.52~~ ✓
$0.5^2 * \frac{1}{2} * 142$ =	17.75 ✓
1.02 * 0.5 * 142 =	72.42 ?
$(0.935 + 0.667)\frac{1}{2} * 11.5 * 142$ =	1308.03 ✓
$(1.02 + 0.667)\frac{1}{2} * 15.0 * 142$ =	1796.66 ✓
$(3.02^2 + 3.30^2)^{\frac{1}{2}} * 0.667 * 142$ =	423.68 ✓
$(0.967 + 0.667)\frac{1}{2} * 5.0 * 142$ =	589.07 ✓
5964.0 * 0.667 =	3977.99 ✓
4.25 * 0.5 * 142 =	301.75 ✓
(13390.0 + 10543 + 1124.8 + 3972.5 + 6921.1) * 1.0 =	8172.70
1.0 * 0.5 * (142 * 3) =	213.00
3.0 * 1.0 * 142 =	426.0
	~~19392.57~~ Ft^3
	19166.80

RUST **Rust Environment & Infrastructure**

CALCULATION SHEET

PROJECT NO. 89932

CLIENT FCDMC

SUBJECT Quantities

PROJECT 10th Street Weir

Prepared By DJ Date 12/06/95

Reviewed By Sky Date 1/23/96

Approved By _____ Date _____

Cutoff wall @ beginning of channel

~~4.075~~ 0.4 * 1.0 * 30.0 =	122.25 Ft³ ✓
2.0 * ~~4.075~~ 11.25 * 1.0 =	22.50
7.0 * 7.0 * 1.0 * ½ =	24.50 ✓
7.0 * 4.075 * 1.0 =	28.53 ✓
3.02 * 3.302 * ½ * 1.0 =	4.99 ✓
4.075 * 3.302 * 1.0 =	13.46 ✓
- 1.0 * 1.25 =	- 1.25
	214.63 ✓

Cut-off wall @ end of weir = (100)(1)(4)/27 = 14.82

RUST **Rust Environment & Infrastructure**

CALCULATION SHEET

PROJECT NO. 89932

CLIENT FCDMC

SUBJECT Quantities

PROJECT 10th St. Wash

Prepared By DS Date 12/06/95

Reviewed By Kly Date 1/23/96

Approved By _____ Date _____

Drop Inlet Structure 00

Bot.	23.0 * 19.75 * (1.354 + 1.25) ½ =	591.43 Ft³ ✓
high side	12.17 * 1.0 * 20.0 =	243.40 ✓
low side	7.5 * 1.0 * 20.0 =	150.00 ✓
tapered sides	(12.17 + 7.5) * ½ * 1.0 * 18.75 * 2 =	368.81 ✓
seat	-0.4323 * 0.4340 * 20.0 * 2 =	-7.50
seat	-0.4323 * 0.4340 * 18.75 * 2 =	-7.03
pipes	- π (30/2)² * 1/144 * 1.0 * 2 =	~~-53.5~~ -39.27
		~~1265.61~~ Ft³
		1299.84

RUST **Rust Environment & Infrastructure**

CALCULATION SHEET

PROJECT NO. 89932

CLIENT FCDMC SUBJECT Quantities

PROJECT 10th st. Wash

Prepared By DS Date 12/06/95

Reviewed By [illegible] Date 1/23/96

Approved By _____ Date _____

Palma Park ~~CBC~~ Manhole Drop Structure

Top	8.0 * 11.83 * 1.0 =	94.64 Ft^3 ✓
low side	7.93 * 9.83 * 1.0 =	77.95
high side	6.11 * 9.83 * 1.0 =	60.06
ends	8.0 * (11.61 + 11.68) ½ * 1.0 * 2 =	186.32 ✓
Bottom	8.67 * 12.5 * (1.33 + 1.25) ½ =	139.80 ✓
	-0.75 * 1.33 * 12.5 =	-12.47
	2.0 * 0.75 * 12.5 =	18.75
	0.75² * ½ * 12.5 =	3.52
		568.57 ✓

Cost = $\frac{\cancel{558.95}\ 568.57}{27}$ * 310 + 6067 * 0.50 = ~~$9,450~~ 9,561

RUST **Rust Environment & Infrastructure**

CALCULATION SHEET

PROJECT NO. 89932

CLIENT FCDMC

SUBJECT Quantities

PROJECT 104th St West

Prepared By DS Date 12/06/95

Reviewed By SLG Date 1/23/96

Approved By _____ Date _____

Palmo Park CBC Drop Inlet

low side	8.0 * 8.0 * 1.0 =	64.0 Ft^3 ✓
high side	7.75 * 8.0 * 1.0 =	62.0 Ft^3 ✓
ends	7.0 * (8 + 11.5) ½ * 11/12 * 2 =	125.13 ~~62.56~~ ✓
bottom	7.67 * 10.5 * 1.25 =	100.67 ✓
	-1.33 * 0.75 * 10.5 =	10.47 ✓
	0.75 * 1.75 * 10.5 =	13.78 ✓
	0.75² * 10.5 * ½ =	2.95
		~~295.49 Ft^3~~ 358.06

Cost = $\frac{\cancel{263.63}\ 358.06}{27}$ * 310 * 3079 * 0.50

= ~~$4800~~ $5,650

RUST **Rust Environment & Infrastructure**

CALCULATION SHEET

PROJECT NO. 89932

CLIENT FCDMC

SUBJECT Quantities

PROJECT 10th St Wash

Prepared By DS Date 12/06/95

Reviewed By [illegible] Date 1/23/96

Approved By _____ Date _____

Total Concrete Quantity

3062.18 ~~3052.81~~ + 1645.83 ~~1601.11~~ + 19166.80 ~~19352.57~~ + 214.03 + 1299.84 ~~1285.61~~ + 568.57 + ~~275.49~~ 358.00

= 26315.31 ~~26410.8~~ / 27 + 14.82

= 989.46 cu yds.

RUST **Rust Environment & Infrastructure**

CALCULATION SHEET

PROJECT NO. 89932

CLIENT FCDMC SUBJECT Quantities Prepared By DS Date 12/06/95

PROJECT 10th St Wash Reviewed By Sky Date 1/23/96

Approved By _____ Date _____

Reinforcing Steel

Wall N1

V1 bars - 4.0' $\left(\frac{5}{0.75}+1\right)$ (8) * 1.502 #/ft = 48.06 ✓

V2 bars 8.67 $\left(\frac{5}{0.75}+1\right)$ (8) * 1.502 #/ft = 104.18 ✓

V3 bars 8.67 $\left(\frac{5}{1.5}+1\right)$ (6) * 0.668 #/ft = 28.96 ✓

#4@ 2'-0" 200 (5) * 0.668 #/ft = 6.68 ✓

Horiz stem 4.67 ($(902-\frac{4}{12})/1.5$) (6) * 2 * 0.668 #/ft + 4.67 * 2 * 1.502 = 51.46 ✓

B1 bars 4.25' * $\left(\frac{5}{1}+1\right)$ (6) * 1.043 #/ft = 26.60 ✓

B2 bars 3.75 * 6 * 1.043 #/ft = 23.47 ✓

F1 bar 4.67 * 3 * 0.668 #/ft = 9.36 ✓

F2 bars 4.67 * 3 * 0.668 #/ft = 9.36 ✓

Cutoff wall 5.0' * 2 * 5 * 0.668 #/ft = 33.40
3.667' * 6 * 0.668 #/ft = 14.70

356.22 lbs

RUST **Rust Environment & Infrastructure**

CALCULATION SHEET

PROJECT NO. 89932

CLIENT FCDMC SUBJECT Quantities

PROJECT 10th Street Wash

Prepared By DS Date 12/07/95

Reviewed By [illegible] Date 1/23/96

Approved By _____ Date _____

Wall N2

V_1 Bars $4.0' * \left(\frac{15}{0.75} + 1\right) * 1.502\#/ft = 126.17$ ✓ (21)

V_2 Bars $\left((8.719 + 4.677)\frac{1}{2} - \frac{4}{12}\right) * 21 * 1.502\#/ft = 200.76$ ✓ (6.365')

V_3 Bars $6.365' * \left(\frac{15}{1.5} + 1\right) * 0.668\#/ft = 46.77$ ✓ (11)

#4 @ 2'-0" $2.00 * 11 * 0.668\#/ft = 14.70$ ✓

Horiz stem $14.67\left(\left(\cancel{8.719 - \frac{4}{12}}\ 6.365\right)/15\right) * 2 * 0.668\#/ft + 14.67 * 2 * 1.502 = \cancel{161.66}\ 122.92$ (6)

B_1 Bars $4.25' * \left(\frac{15}{1} + 1\right) * 1.043\#/ft = 70.92$ ✓ (16)

B_2 Bars $3.75' * 16 * 1.043\#/ft = 62.58$ ✓

F_1 bars $14.67 * 3 * 0.668\#/ft = 29.40$ ✓

F_2 bars $14.67 * 3 * 0.668\#/ft = 29.40$ ✓

$\boxed{\cancel{742.36}\ \text{lbs}}$

703.62

RUST **Rust Environment & Infrastructure**

CALCULATION SHEET

PROJECT NO. 89932

CLIENT FCDMC

SUBJECT Quantities

PROJECT 10th St Wash

Prepared By DS Date 12/07/95

Reviewed By [illegible] Date 1/23/96

Approved By _____ Date _____

Well N3

V1 Bars 4.0' * 21 * 1.502 #/ft = 126.17 ✓

V_2 Bars $((8.429 + 4396)\frac{1}{2} - \frac{4}{12})$ (6.079') * 21 * 1.502 #/ft = 191.74 ✓

V_3 Bars 6.079 * 11 * 0.668 #/ft = 44.67 ✓

#4 @ 2'-0" 2.00 * 11 * 0.668 #/ft = 14.70 ✓

Horiz. stem 14.67 $((\cancel{8.425}\ 6.079 - \frac{4}{12})/1.5)$ (6) 4 * 2 * 0.668 #/ft * 14.67 * 2 * 1.502 = ~~161.66~~ 122.47

B1 Bars 4.25 ✓ * 16 ✓ * 1.043 #/ft = 70.92 ✓

B_2 Bars 3.75 * 16 * 1.043 #/ft = 62.58 ✓

F_1 bars 14.67 * 3 * 0.668 #/ft = 29.40 ✓

F_2 bars 14.67 * 3 * 0.668 #/ft = 29.40 ✓

~~731.24~~ lbs
692.05

RUST **Rust Environment & Infrastructure**

CALCULATION SHEET

PROJECT NO. 89932

CLIENT FCDMC SUBJECT Quantities Prepared By DS Date 12/07/95

PROJECT 10th St. Wash Reviewed By SLg Date 1/23/96

Approved By _____ Date _____

Wall N4

V_1 bars ~~3.9167~~ 4.0 * (13 / 12/1 + 1) * 1.502 #/ft = ~~76.48~~ 78.10

V_2 bars ((6.281 / 8.229 + 5.0) 1/2 - 4/12) * 13 * 1.502 #/ft = ~~122.64~~ 116.20

V_3 bars 6.281 * 9 * 0.668 #/ft = 37.76 ✓

Horiz stem 11.67 * ((6.281 / ~~8.229~~ - 4/12) / 1.5) * 2 * 0.668 #/ft * 11.67 * 2 * 1.502 = ~~128.60~~ 97.42

#4 @ 2'-0" 2.00 * 9 * 0.668 #/ft = 12.02 ✓

B_1 bars 4.25 * 13 * 1.043 #/ft = 57.63 ✓

B_2 bars 3.75 * 13 * 1.043 #/ft = 50.85 ✓

F_1 bars 11.67 * 3 * 0.668 #/ft = 23.39 ✓

F_2 bars 11.67 * 3 * 0.668 #/ft = 23.39 ✓

~~532.76~~ lbs
496.75

RUST **Rust Environment & Infrastructure**

CALCULATION SHEET

PROJECT NO. 89932

CLIENT FCDMC

SUBJECT Quantities

PROJECT 10th Street Wash

Prepared By DS Date 12/07/95

Reviewed By [illegible] Date 1/24/96

Approved By _____ Date _____

Wall N5

V_1 bars $2.5' * (\frac{16}{1} + 1) * 1.043\#/ft = 44.33$ ✓ (17)

V_2 bars $[(5.5 + 1.5)\frac{1}{2} - \frac{4}{12}] * 17 * 1.043\#/ft =$ ~~56.15~~ 50.30 (3.167)

V_3 bars $3.167 * (\frac{16}{1.5} + 1) * 0.668\#/ft = 25.39$ ✓ (12)

#4 @ 2'-0" $2.00 * 12 * 0.668\#/ft = 16.03$ ✓

Horiz stem $15.67 * ((\cancel{5.5} - \frac{4}{12})/1.5) * 2 * 0.668 * 15.67 * 2 * 1.502 =$ ~~130.81~~ 88.94 (3.167 ~~4~~ 2)

B_1 bars $3.25 * (\frac{16}{1} + 1) * 1.043\#/ft = 57.63$ ✓ (17)

B_2 bars $3.00 * 17 * 1.043\#/ft = 53.19$ ✓

F_1 bars $15.67 * 2 * 0.668\#/ft = 20.94$ ✓

F_2 bars $15.67 * 3 * 0.668\#/ft = 31.40$ ✓

~~435.87 lbs~~
388.69

RUST **Rust Environment & Infrastructure**

CALCULATION SHEET

PROJECT NO. 89932

CLIENT FCDMC

SUBJECT Quantities

PROJECT 10th Street Wash

Prepared By DS Date 12/07/95

Reviewed By slg. Date 1/24/96

Approved By _____ Date _____

Wall S,

V, bars $6.33' * \left(\frac{46.25}{0.75} + 1\right) * 2.044\#/ft = 815.13$ (63)

V_2 bars $\left(9.4167 - \frac{4}{12}\right) * \left(\frac{(46.25 - 18.75)}{0.75} + 1\right) * 2.044\#/ft = 723.82$ (9.08) (37)

V_3 bars $9.08 * \left(\frac{(46.25 - 18.75)}{1.5} + 1\right) * 0.668\#/ft = 121.31$ (20)

#4 @ 2'-0" $2.0 * \left(\frac{46.25}{1.50} + 1\right) * 0.668\#/ft = 42.75$ (33)

Horiz. stem $27.33 * (9.08/1.5) * 2 * 0.668 * 45.916 * 2 * 1.502 = 357.01$ (6)

B, bars $5.0 * \left(\frac{46.25}{1} + 1\right) * 1.043\#/ft = 245.11$ (47)

B_2 bars $5.0 * \left(\frac{46.25}{0.75} + 1\right) * 1.502\#/ft = 473.13$ (63)

F, bars $(46.25 + 1) * 4 * 0.668\#/ft = 126.25$

F_2 bars $47.25 * 4 * 0.668\#/ft = 126.25$

Culvert 2-#6 x 20 $2 * 20 * 2 * 1.502\#/ft * 2 = \cancel{240.32}$ 120.16

2-#6 18' $2 * 8.0 * 2 * 1.502\#/ft = 48.06$

2-#6 4' $2 * 4.0 * 4 * 1.502\#/ft = 48.06$

#4 horiz stem $2 * 20 * 2 * 0.668\#/ft = \cancel{53.44}$

$\boxed{\cancel{3420.64} \text{ lbs}}$

3247.04

RUST **Rust Environment & Infrastructure**

CALCULATION SHEET

PROJECT NO. 69932

CLIENT FCD MC SUBJECT Quantities Prepared By DS Date 12/07/95

PROJECT 10th Street Wash Reviewed By SLG Date 1/24/96

Approved By _____ Date _____

Wall S_2

V_1 bars $6.33' * \left(\frac{15}{0.75}+1\right)^{21} * 2.044\#/1 = 271.71$ ✓

V_2 bars $\left(\left(9.4167+5.135\right)\frac{1}{2}-\frac{4}{12}\right)^{6.942} * 21 * 2.044\#/ft = \cancel{297.98}\ 283.81$

V_3 bars $6.942 * \left(\frac{15}{1.5}+1\right)^{11} * 0.668\#/ft = 51.01$ ✓

#4@2'-0" $20 * 11 * 0.668\#/ft = 14.70$ ✓

Horiz stem $14.67 * \left(\left(\cancel{9.4167}\ 6.942-\frac{4}{12}\right)/1.5\right)^{6.5} * 2 * 0.668 + 14.67 * 2 * 1.502 = \cancel{161.66}\ 142.06$

B_1 bars $5.0 * \left(\frac{15}{1}+1\right)^{16} * 1.043\#/ft = 83.44$ ✓

B_2 bars $5.0 * \left(\frac{15}{0.75}+1\right)^{21} * 1.502\#/ft = 157.71$ ✓

F_1 bars $14.67 * 4 * 0.668\#/ft = 39.20$ ✓

F_2 bars $14.67 * 4 * 0.668\#/ft = 39.20$ ✓

$\boxed{\cancel{1116.61}\ \text{lbs}\ 1082.87}$

RUST **Rust Environment & Infrastructure**

CALCULATION SHEET

PROJECT NO. 89932

CLIENT FCDMC

SUBJECT Quantities

Prepared By DS Date 12/07/95

PROJECT 10th Street Wash

Reviewed By SLG Date 1/24/96

Approved By _____ Date _____

Wall S3

V_1 bars 4.0 + $\left(\frac{15}{0.75}+1\right)$ (21) * 1.502 #/ft = 126.17 ✓

V_2 bars $\left((8.885 + 4.04)\frac{1}{2} - \frac{4}{12}\right)$ (6.411) * 21 * 1.502 #/ft = ~~202.22~~ 191.81

V_3 bars 6.411 + $\left(\frac{15}{1.5}+1\right)$ (11) * 0.668 #/ft = 47.11 ✓

#4 @ 2'-0" 20 * 11 * 0.668 #/ft = 14.70 ✓

Horiz stem 14.67 * $\left(\left(\cancel{8.885}\ 6.411 - \frac{4}{12}\right)/1.5\right)$ (6.4) * 2 * 0.668 * 14.67 * 2 * 1.502 = ~~161.66~~ 122.47

B_1 bars 4.25 * 16 * 1.043 #/ft = 70.92 ✓

B_2 bars 3.75 * 16 * 1.043 #/ft = 62.58 ✓

F_1 bars 14.67 * 3 * 0.668 #/ft = 29.40 ✓

F_2 bars 14.67 * 3 * 0.668 #/ft = 29.40 ✓

~~744.16~~ Tbs
694.56

RUST **Rust Environment & Infrastructure**

CALCULATION SHEET

PROJECT NO. 89932

CLIENT FCDMC SUBJECT Quantities Prepared By PS Date 12/07/95

PROJECT 10th Street Wash Reviewed By SLG Date 1/24/96

Approved By _____ Date _____

Wall S4

V_1 bars $4.0 * \left(\frac{12}{0.75} + 1\right) * 1.502$ #/ft $= 102.14$ ✓ (17)

V_2 bars $\left(\left(8.427 + 5.00\right)\frac{1}{2} - \frac{4}{12}\right) * 17 * 1.502$ #/ft $=$ ~~162.91~~ 154.48 (6.380)

V_3 bars $6.380 * \left(\frac{12}{1.5} + 1\right) * 0.668$ #/ft $= 38.36$ ✓ (9)

#4 @ 2'-0" $2.0 * 9 * 0.668$ #/ft $= 12.02$ ✓

Horiz Stem $11.67 * \left(\left(\cancel{8.427}\ 6.380 - \frac{4}{12}\right)/1.5\right) * 2 * 0.668 + 11.67 * 2 * 1.502 =$ ~~128.60~~ 113.01 (6) 5.0

B_1 bars $4.25 * 13 * 1.043$ #/ft $= 57.63$ ✓

B_2 bars $3.75 * 13 * 1.043$ #/ft $= 50.85$ ✓

F_1 bars $11.67 * 3 * 0.668$ #/ft $= 23.39$ ✓

F_2 bars $11.67 * 3 * 0.668$ #/ft $= 23.39$

$\boxed{\cancel{599.29}\ \text{lbs}}$

575.26

RUST **Rust Environment & Infrastructure**

CALCULATION SHEET

PROJECT NO. 89932

CLIENT FCDMC SUBJECT Quantities

PROJECT 10th Street Wash

Prepared By DS Date 12/07/95

Reviewed By SLG Date 1/24/96

Approved By _____ Date _____

Wall S5

V_1 bars 2.5' × 3 × 1.043#/ft = ~~88.66~~ 80.84 ✓

V_2 bars 4.67 × 3 × 1.043#/ft = ~~165.61~~ 150.98 ✓

V_3 bars 4.67 × $\left(\frac{30}{1.5}+1\right)$ × 0.668#/ft = ~~71.75~~ 65.51 (~~23~~ 21)

#4@2'-0" 2.0 × 2 × 0.668#/ft = ~~30.73~~ 28.06

Horiz stem ~~34~~ 3(29.67) × $\left(\left(5-\frac{4}{12}\right)/1.5\right)$ × 2 × 0.668 × ~~34~~ 29.62 × 2 × 1.502 = ~~238.41~~ 208.05

B_1 bars 2.75 × ~~34~~ 31 × 1.043#/ft = ~~97.52~~ 88.92

B_2 bars 2.75 × ~~34~~ 31 × 1.043#/ft = ~~97.52~~ 88.92 ✓

F_1 bars ~~34~~ 29.67 × 2 × 0.668#/1 = ~~45.42~~ 39.64

F_2 bars ~~34'~~ 29.67 × 3 × 0.668#/ft = ~~68.14~~ ~~59~~ 59.46

~~903.76~~ 810.39 lbs

RUST **Rust Environment & Infrastructure**

CALCULATION SHEET

PROJECT NO. 89932

CLIENT FCDMC SUBJECT Quantities Prepared By DS Date 12/07/95

PROJECT 10th Street Wash Reviewed By Sbg. Date 1/24/96

Approved By _____ Date _____

Wall S6

V1 bars 2.5 * ~~15~~ 21 * 1.043 #/ft = ~~39.11~~ 54.76

V2 bars ~~5.08~~ 5.17 * ~~15~~ 21 * 1.043 #/ft = ~~79.48~~ 113.24

V3 bars ~~5.08~~ 5.17 * (~~14~~ 20 / 1.5 + 1) * 0.669 #/ft = ~~37.33~~ 48.35

x 2'-0" 2.0 * 11 * 0.669 #/ft = 14.70 ✓

Horiz Stem ~~18.67~~ 19.67 * ((5.5 - 4/12) / 1.5) * 2 * 0.669 * ~~18.67~~ 19.67 * 2 * 1.502 = ~~114.12~~ 149.66

B1 bars 3.25 * ~~15~~ 21 * 1.043 #/ft = ~~50.85~~ 71.18

B2 bars 3.0 * ~~15~~ 21 * 1.043 #/ft = ~~46.94~~ 65.71

F1 bars ~~13.67~~ 19.67 * 2 * 0.669 #/ft = ~~18.26~~ 26.28

F2 bars ~~13.67~~ 19.67 * 3 * 0.669 #/ft = ~~27.39~~ 39.42

~~428.15~~ lbs
583.30

RUST **Rust Environment & Infrastructure**

CALCULATION SHEET

PROJECT NO. 89932

CLIENT FCDMC SUBJECT Quantities

PROJECT 10th street Wash

Prepared By DS Date 12/07/95

Reviewed By Slg Date 1/24/96

Approved By _____ Date _____

Wall S7

V_1 bars 2.5 × ~~48~~ 0.4 × 1.043#/ft = 125.16 ✓

V_2 bars $\left(\left(5.5+1.5\right)\frac{1}{2}-\frac{4}{12}\right)$ (3.167) × 48 × 1.043#/ft = 158.55 ✓

V_3 bars 3.167 × $\left(\frac{46.75}{1.5}+1\right)$ (32) × 0.668#/ft = 67.70 ✓

#4 × 2'-0" 2.0 × 32 × 0.668#/ft = 42.75 ✓

Horiz. stem ~~50~~ (43.79-0.33) × $\left(\left(\cancel{5.5}\ 3.167 - \frac{4}{12}\right)/1.5\right)$ (4) ✓ × 2 × 0.668#/ft × ~~50~~ (43.79-0.33) × 2 × 1.502 = ~~417.40~~ 246.67

B_1 bars 3.25 × 48 × 1.043#/ft = 162.71 ✓

B_2 bars 3.0 × 48 × 1.043#/ft = 150.19 ✓

F_1 bars ~~50~~ (43.79-0.33) × 2 × 0.668#/ft = ~~66.80~~ 58.06

F_2 bars ~~50~~ (43.79-0.33) × 3 × 0.668#/ft = ~~100.20~~ 87.09

~~1291.46~~ lbs
1098.88

RUST **Rust Environment & Infrastructure**

CALCULATION SHEET

PROJECT NO. 89932

CLIENT FCDMC

SUBJECT Quantities

PROJECT 10th Street Wash

Prepared By DS Date 12/07/95

Reviewed By [illegible] Date 1/24/96

Approved By _____ Date _____

N Walls steps

Z (3.75+1+1) * 6 * 2 * 0.668 #/ft = 46.09 ✓

• ~~3~~ 4 * ~~5.08~~ 5.17 * 2 * 0.668 #/ft = ~~20.36~~ 27.63 ✓

Z (3.83+1+1) * 6 * 2 * 0.668 #/ft = 46.73 ✓

• ~~3~~ 4 * ~~5.08~~ 5.17 * 2 * 0.668 #/ft = ~~20.36~~ 27.63.

S Walls steps

Z (3.75+1+1) * 6 * 2 * 0.668 #/1 = 46.09

• ~~3~~ 4 * ~~5.08~~ 5.17 * 2 * 0.668 #/ft = ~~20.36~~ 27.63

Z (3.83+1+1) * 6 * 2 * 0.668 #/ft = 46.73

• 3 * 5.08 * 2 * 0.668 #/ft = ~~20.36~~ 27.63

~~267.08~~ 296.17 lbs

RUST **Rust Environment & Infrastructure**

CALCULATION SHEET

PAGE 111 OF 121

PROJECT NO. 89932

CLIENT FEDMC SUBJECT Quantities

PROJECT 10th Street West

Prepared By DS Date 12/07/95

Reviewed By SLG Date 1/24/96

Approved By _____ Date _____

?

Walls E1, E2, E3, ~~W1, W2 & W3~~ foundations

E1 #6 @ 9" cts 6.0 × $\left(\frac{28.0}{0.75}+1\right)$ (37) 38 × 1.502 #/ft = ~~333.44~~ 342.46

#4 @ 18" cts 5.0 × $\left(\frac{28}{1.5}+1\right)$ (19) × 2 × 0.668 #/ft = 126.92

6-#4 27.74 × 6 × 0.668 #/ft = ~~108.22~~ 111.18

4-#4 27.74 × 4 × 0.668 #/ft = ~~72.14~~ 74.12

1-#4 27.74 × 1 × 0.668 #/ft = ~~16.70~~ 18.53

(E2 & E3) #6 @ 9" cts 6.0 × $\left(\frac{28}{0.75}+1\right)$ (38) × 1.502 #/ft × 2 = 684.91 ✓

#4 @ 18" cts 5.0 × $\left(\frac{28}{1.5}+1\right)$ (21) × 2 × 0.668 #/ft × 2 = 280.56 ✓

11-#4 bars 27.67 × 11 × 0.668 #/ft × 2 = 406.64 ✓

~~(W1, W2, W3) #6 @ 9" cts 6.0 × $\left(\frac{12.3}{0.75}+1\right)$ (18) × 1.502 #/ft × 3 = 486.65~~

~~#4 @ 18" cts 5.0 × $\left(\frac{12.3}{1.5}+1\right)$ (9) × 2 × 0.668 #/ft × 3 = 180.36~~

~~11-#4 bars 13.25 × 11 × 0.668 #/ft × 3 = 292.08~~

steps

(3.92+1+1) × 7 × 2 × 0.668 + (4.27+1+1) × 7 × 2 × 0.668 = 85.94

5 × 6.0' × 0.668 × 2 = 40.08

~~2155.55~~

2171.34

Rev. 11/94 scale: 4 sq./inch F051/General

RUST **Rust Environment & Infrastructure**

CALCULATION SHEET

PROJECT NO. 89932

CLIENT FEDMC

SUBJECT Quantities

PROJECT 10th Street Wash

Prepared By DS Date 12/07/95

Reviewed By [illegible] Date 1/24/96

Approved By _____ Date _____

Wall E1 Vertical reinf. in stem

#6 @ 9" cts 12.03 * $\left(\frac{27.74}{0.75}+1\right)$ (38) * 1.502 #/ft = ~~668.56~~ 686.62 ✓

#4 @ 18" cts 10.53 * $\left(\frac{27}{1.5}+1\right)$ (19) 20 * 0.668 #/ft = ~~133.65~~ 140.68 ✓

Horiz #4 6 * ~~26.67~~ 27.74 * 2 * 0.668 #/ft = ~~189.74~~ 222.36 ✓

#6 2 * ~~26.67~~ 27.74 * 1.502 #/ft = ~~71.10~~ 83.33

Wall E2

#6 @ 9" cts 12.03 * $\left(\frac{28}{0.75}+1\right)$ (38) * 1.502 #/ft = 686.62

#4 @ 18" cts 10.53 * $\left(\frac{28}{1.5}+1\right)$ (20) * 0.668 #/ft = 140.68

Horiz #4 & #6 6 * 27.67 * 2 * 0.668 #/ft + 2 * 27.67 * 1.502 = 304.92

Wall E3

#6 @ 9" cts ~~9.01~~ 8.78 * 38 * 1.502 #/ft = ~~514.25~~ 501.13

#4 @ 18" ct ~~8.51~~ 7.28 * 20 * 0.668 #/ft = ~~113.69~~ 97.26

Horiz #4 & #6 5 * 27.67 * 2 * 0.668 + 2 * 27.67 * 1.502 = 267.96

~~3091.17~~ lbs

3131.56

RUST **Rust Environment & Infrastructure**

CALCULATION SHEET

PROJECT NO. 89932

CLIENT FCDMC

SUBJECT Quantities

PROJECT 10th street Wash

Prepared By DS Date 12/07/95

Reviewed By [illegible] Date 1/24/96

Approved By _____ Date _____

Weir Reinforcing steel

#4@12"cts	3.34' * 143 * 0.668 #/ft =	~~319.05~~ 320.01
#4@12"cts top	10.0' * 143 * 0.668 #/ft =	955.24 ✓
#6@12"cts bot	12.25' * 143 * 1.502 #/ft =	2631.13 ✓
#4@12"cts	4.75' * 143 * 0.668 #/ft =	453.74 ✓
#6@12"	9.5' * 143 * 1.502 #/ft =	2040.47 ✓
#4@12"	30' * 143 * 0.668 #/ft =	2865.72 ✓
#4@12"	6.0' * 143 * 0.668 #/ft =	573.14 ✓
#5@12"cts	6.0' * 143 * 1.043 #/ft =	894.89 ✓
#4@12"cts	7.0' * 143 * 0.668 #/ft =	668.67 ✓
#4@12"cts	43.25' * 143 * 0.668 #/ft =	4131.41 ✓
#4 x 4'-0"	4.0 * 143 * 0.668 #/ft =	382.10 ✓
#4@12"cts	11 * 2 * (143 + 4.0) * 0.668 #/ft =	2160.31 ✓
#5@	2 * (143 + 4.0) * 1.043 #/ft =	306.64 ✓
4-equally open	8 * 147 * 0.668 #/ft =	785.57 ✓
	82 * 147 * 0.668 #/ft =	8052.07 ✓

$\boxed{27220.15 \text{ lbs}}$

27,221.11

RUST Rust Environment & Infrastructure

CALCULATION SHEET

PROJECT NO. 89932

CLIENT FCDMC

SUBJECT Quantities

PROJECT 10th Street West

Prepared By DS Date 12/07/95

Reviewed By [illegible] Date 1/24/96

Approved By _____ Date _____

Channel Wall

#4 @ 12" ct each way + 1' @ each step

A = 13391° + 10543 + 1124.8 + 6822 + 3972.5
+ 143' + 1' + 4

= 87449

= 87449 + 0.668 × 2 × 2 = 23,366 #

#4 1'-0" 8'-2" 1'-0" 2.708 + 143 + 4 × 2 × 0.668 = 2069 #

Cut off wall @ end of wall

#4 @ 18" ct. 7 5.0 × (142/1.5 + 1) × 2 × 0.668 = 641 #

6 #4 • 6 × 147 × 0.668 = ~~598 #~~ 589.18

Cut off wall @ beg. of channel

#4 @ 18" ct. 7 ~~8.15'~~ 5.33' × (30/1.5 + 1) × 2 × 0.668 = ~~220.~~ 149.54 #

#4 @ 18" ct. 7 ~~12.0'~~ (12.83 + 5.33)/2 × (7/1.5 + 1) × 2 × 0.668 × 2 = ~~96 #~~ 145.57

#4 @ 18" ct. 7 ~~10.0'~~ 12.83 × (3/1.5 + 1) × 2 × 0.668 × 2 ~~40 #~~ 102.84

27038 lbs

RUST **Rust Environment & Infrastructure**

CALCULATION SHEET

PROJECT NO. 89932

CLIENT FCDMC

SUBJECT Quantities

PROJECT 10th Street West

Prepared By DS Date 12/07/95

Reviewed By HG Date 1/24/96

Approved By _____ Date _____

Cut off

⌐ #4@12"ct	2.5' * (15 + 11) * 0.668 #/ft =	43.42
•	7 bars * 2 * 38' * 0.668 #/ft =	355.38
•	8 bars * 2 * 3.5 * 0.668 #/ft =	37.41

$\boxed{436.20 \text{ lbs}}$

RUST **Rust Environment & Infrastructure**

CALCULATION SHEET

PROJECT NO. 89932.100

CLIENT FCDMC SUBJECT Quantity

PROJECT 10th Street Wash

Prepared By DS Date 12/06/95

Reviewed By Sley Date 1/24/96

Approved By _____ Date _____

Drop Inlet Structure 20' x 16'-9"

Bottom Slab bot #5 22.5' * 20 bars * 1.043 = 469 # ✓

#5 19.42' * ~~26~~ 24 bars * 1.043 = ~~527~~ # 486

top #7 ~~21.33'~~ 21.17 * 27 bars * 2.014 = ~~1160~~ # 1151.18

#7 19.42 * 28 bars * 2.014 = 1095 # ✓

#5@12" (2.5) x 19 x 1.043 = 49.54

Side walls J #7@9"cts 9.0' * 110 bars * 2.014 = 1994 # ✓

J #7@9"cts ~~9.5'~~ 9.825 * 110 bars * 2.014 = ~~2105~~ # 2176.63

J #4@9"cts 10.5 * 110 bars * 2.014 = 2326 # ✓

• #5@6"cts 20 bars * ~~109'~~ 97.5 * 1.043 = ~~2274~~ # 2033.85

• #5@9"cts 13 bars * ~~109~~ 97.5 * 1.043 = ~~1478~~ # 1322

⊓ #4@18"cts 1.67' * 55' * 0.668 = 61 # ✓

⊡ #5@12"cts 4.08 * ~~55~~ 40 * 0.668 = ~~150~~ # 109

3-#7 top - 6 * ~~109~~ 21.67 * 2.014 x 2 ~~1317.16~~ # ~~26186~~ 523.72

L #5@Corners - 2 * 4 * 5.0 * 1.043 * 20 = 834.4 # ✓

L #5@Corners - 1 x 4 x 5.0 * 1.043 * 13 = 271.18 # ✓

L #7@Corners - 3 * 4 * 6 * 5.0 * 2.014 = 725.04 ?

15,627.54

Cost = 1242.64 / 27 * $310/cu yd + 13489 * $0.50 = $21,000

Rev. 11/94 scale: 4 sq./inch ~~16787~~ ? F051/General

RUST **Rust Environment & Infrastructure**

CALCULATION SHEET

PROJECT NO. 89932

CLIENT FCDMC

PROJECT 10th street Wash

SUBJECT Palma Park Drop Inlet Structure

Prepared By DS Date 01/07/95

Reviewed By [illegible] Date 1/24/96

Approved By _____ Date _____

Palma Park Drop Inlet Structure

Bottom Slab	bot #6 @ ~~12"~~ 9" cts	7.33 * ~~11~~ 14 *	1.502 =	~~121.2~~ 154.14 ✓
	#6 @ 12" cts	2.92 * 11 *	1.502 =	48.2 ✓
	#6 @ 9" cts	10.167 * 13 *	1.502 =	198.5 ✓
	top #6 @ ~~12"~~ 9" cts	6.00 * ~~11~~ 14 *	1.502 =	~~99.1~~ 126.17
	#6 @ 9" cts	10.167 * 9 *	1.502 =	137.4 ✓
Short side	#6 @ ~~12"~~ 9" cts	7.67 * ~~11~~ 14 *	1.502 =	~~126.7~~ 161.28
	#4 @ 12" cts	8.67 * 11 *	0.668 =	63.7 ✓
	#6 @ ~~12"~~ 9" cts	2.50 * ~~11~~ 14 *	1.502 =	~~41.3~~ 52.57
	#5 @ 12" cts	9.49 * 9 *	1.043 * 2 =	~~185.9~~ 178.17
	#5 @ 12" cts	4.08 * 10 *	0.668	27.3 ✓
	6-#7 bars	9.58 * 6 *	2.014 =	116.3 ✓
tall side	#6 @ ~~12"~~ 9" cts	9.33 * ~~11~~ 14 *	1.502 =	~~154.2~~ 196.20
	#4 @ 12" cts	8.75 * 11 *	0.668 =	64.3 ✓
	#5 @ 12" cts	9.49 * 9 *	1.502 x 2 =	~~128.3~~ 256.57
	#5 @ 12" cts	4.08 x 10 x	0.668	27.3 ✓
	6-#7 bars	9.5 x 6 x	2.014	116.3 ✓
taper side	#6 @ 9" cts	3.17 * 10 *	1.502 * 2 =	95.2 ✓
	#6 @ 9" cts	9.42 * 10 *	1.502 * 2 =	283.0 ✓
	#4 @ 12" cts	10.42 * ~~10~~ 8 *	0.668 * 2 =	~~139.2~~ 111.37
	#5 @ 12" cts	6.67 * 11 *	1.502 * 2 * 2 =	440.8

~~2854.3 #~~ 2854.77

268

RUST **Rust Environment & Infrastructure**

CALCULATION SHEET

PROJECT NO. 89932

CLIENT FCDMC

PROJECT 10th Street Wash

SUBJECT Palma Park Manhole Drop Structure

Prepared By DS Date 04/07/95

Reviewed By Slg Date 1/24/96

Approved By _____ Date _____

Palma Park Manhole Drop Structure

Bottom Slab

bot #9 @ 9" =	12.16 *	15 *	3.400	=	620.2 # ✓
bot #7 @ 9" cts	8.33 *	17 *	2.044	=	269.6 # ✓
✓ #5 @ 12" cts	3.167 *	13 *	1.043	=	42.9 # ✓
Top #6 @ 9" cts	12.16 *	12 *	1.502	=	219.2 # ✓
Top #6 @ 9" cts	7.167 *	17 *	1.502	=	183.0 # ✓

Side Walls

#5 @ 9" cts	⌋	10.35' *	17 *	1.043 =	183.5 # ✓
#4 @ 9" cts	⌋	9.93' *	17 *	0.668 =	112.8 # ✓
#5 @ 12" ct	•	11.50' *	9 *	1.043 =	108.0 # ✓
#4 @ 12" cts	•	11.50' *	9 *	0.668 =	69.1 # ✓
#7 @ 9" cts	⌋	4.33' *	17 *	2.044 =	150.5 # ✓
#5 @ 9" cts	|	~~5.78~~ 7.78 *	17 *	1.043 =	~~102.5~~ # 137.95
#4 @ 9" cts	|	~~6.94~~ 8.28 *	17 *	0.668 =	~~78.44~~ 99.71
#5 @ 9" cts	[	2.33 *	17 *	1.043 =	41.3 # ✓
#5 @ 9" cts	[	2.75 *	17 *	1.043 =	48.8 # ✓
#5 @ 12" cts	•	11.50 *	~~8~~ 9 *	1.043 =	~~96.0 #~~ 107.93
#4 @ 12" cts	•	11.50 *	~~8~~ 9 *	0.668 =	~~61.5 #~~ 69.14
#6 @ 9" cts	L	2.33 *	17 *	1.502 =	59.5 # ✓
#6 @ 9" cts	L	2.75 *	17 *	1.502 =	70.2 # ✓
#5	•	11.50 *	1 *	1.043 =	12.0 # ✓
#4	•	11.50 *	1 *	0.668 =	7.7 # ✓

RUST **Rust Environment & Infrastructure**

CALCULATION SHEET

PROJECT NO. _____

CLIENT FCDMC

PROJECT 10th Street Wash

SUBJECT Palma Park Manhole Drop Structure

Prepared By DS Date 1/07/95

Reviewed By SLG Date 1/24/96

Approved By _____ Date _____

Side walls

# ~~4~~ 5 @ 9" cts	12.31' * 12 *	~~0.668~~ 1.043 * 2 =	~~197.4#~~	308.14 ✓
# 4 @ 9" cts	~~13.47~~ 14.06 o.w. * 12 *	0.668 * 2 =	216.0# ✓	
# 9 @ 9" cts	4.25 * 12 *	3.400 * 2 =	346.8# ✓	
# 9 @ 9" cts	5.50 * 3 *	3.400 * 2 =	112.2# ✓	
# 5 @ 12" cts	8.33 * 13 *	1.043 * 2 =	225.9# ✓	
# 4 @ 12" cts	8.33 * 13 *	0.668 * 2 =	144.7# ✓	

Cover

# 6 @ 9" cts	8.33 * 17 *	1.502 =	212.7 ✓
# 4 @ 12" cts	8.33 * 13 *	0.668 =	72.3 ✓
# 6 @ 9" cts	11.50 * 12 *	1.502 =	207.3 ✓
# 4 @ 12" cts	11.50 * 10 *	0.668 =	76.8 ✓

Corners

# 5	L	5.0' * 14 * 4 * 1.502 =	420.6
# 4	L	5.0 * 14 * 4 * 2 * 0.668 =	374.1

~~5163.5~~

~~5274.2~~

5350.59

RUST **Rust Environment & Infrastructure**

CALCULATION SHEET

PROJECT NO. 89932

CLIENT FCDMC

PROJECT 10th street

SUBJECT Drop Inlet Structure

Prepared By PS Date 01/08/95

Reviewed By Sley Date 1/24/96

Approved By _____ Date _____

Structural Steel

1/2" x 5 3/16" x 21' - 2	=	0.5 x 5.1875 x 21/144 x 2 x 490 =	~~416#~~ 370.69
1/2" x 5 3/16" x 18'-3 1/2" - 2	=	0.5 x 5.1875 x 18.29167/144 x 2 x 490 =	~~323#~~ 340
Anchor bolts	=	(42 + 74 + 64) ~~26 + 26.73 + 31.18~~	180#
L 4x4x1/4" x 16'-9" - 2	=	12.8 x 2 x 16.75 =	429# ✓
W8x58 - 3	=	18.29 x 3 x 58 =	3184 ✓
			~~1348~~ 4503.69

RUST **Rust Environment & Infrastructure**

CALCULATION SHEET

PROJECT NO. 89932

CLIENT FCDMC

SUBJECT Palma Park

PROJECT 10th Street West

Drop Inlet Structure

Prepared By DS Date 01/07/95

Reviewed By Sly Date 1/24/95

Approved By _____ Date _____

Palma Park Drop Inlet Structure

Structural Steel

∠ 6" x 3½" x ½" x 6'-7⅛" (2)	15.3#/ft x ~~6.58 x 2~~ (6.50x2+8.91x2) =	~~201.6~~ 471.55
∠ 6" x 6" x ½" x 8'-6" (2)	19.6 x ~~8.5 x 2~~ (6.50x2+8.91x2) =	~~333.2~~ 604.08
½"ϕ x 6" Anchor bolts	(9 + 7) x 2 x 2 x 1#/each =	~~642~~ 0.71
		~~596.6#~~
		1096.34

CIVIL CALCULATIONS

RUST Rust Environment & Infrastructure

CALCULATION SHEET

PROJECT NO. 89932

CLIENT FCDMC

SUBJECT Riprap Design Calcs

PROJECT 10th Street Wash

Prepared By GKH Date 1/21/96

Reviewed By [illegible] Date 1/23/96

Approved By _____ Date _____

<DESIGN CALCS FROM HEC-11>

PER FIGURE 57
↳ SPILLWAY & CBC OUTLET IN WASH W/ VELOCITIES > 11 FPS, USE 18" THICK (TYPE I)

PER FIGURE 57
↳ ALL VELOCITIES < 8 FPS USE 12" THICK (TYPE II)
(APPLIES TO APRON OUTLETS)

MEDIAN ROCK SIZE ≈ .67 X THICKNESS (PG 99 HEC-11)
↳ TYPE I ⇒ .67 (18") = 12" (D_{50})
↳ TYPE II ⇒ .67 (12") = 9" (D_{50})

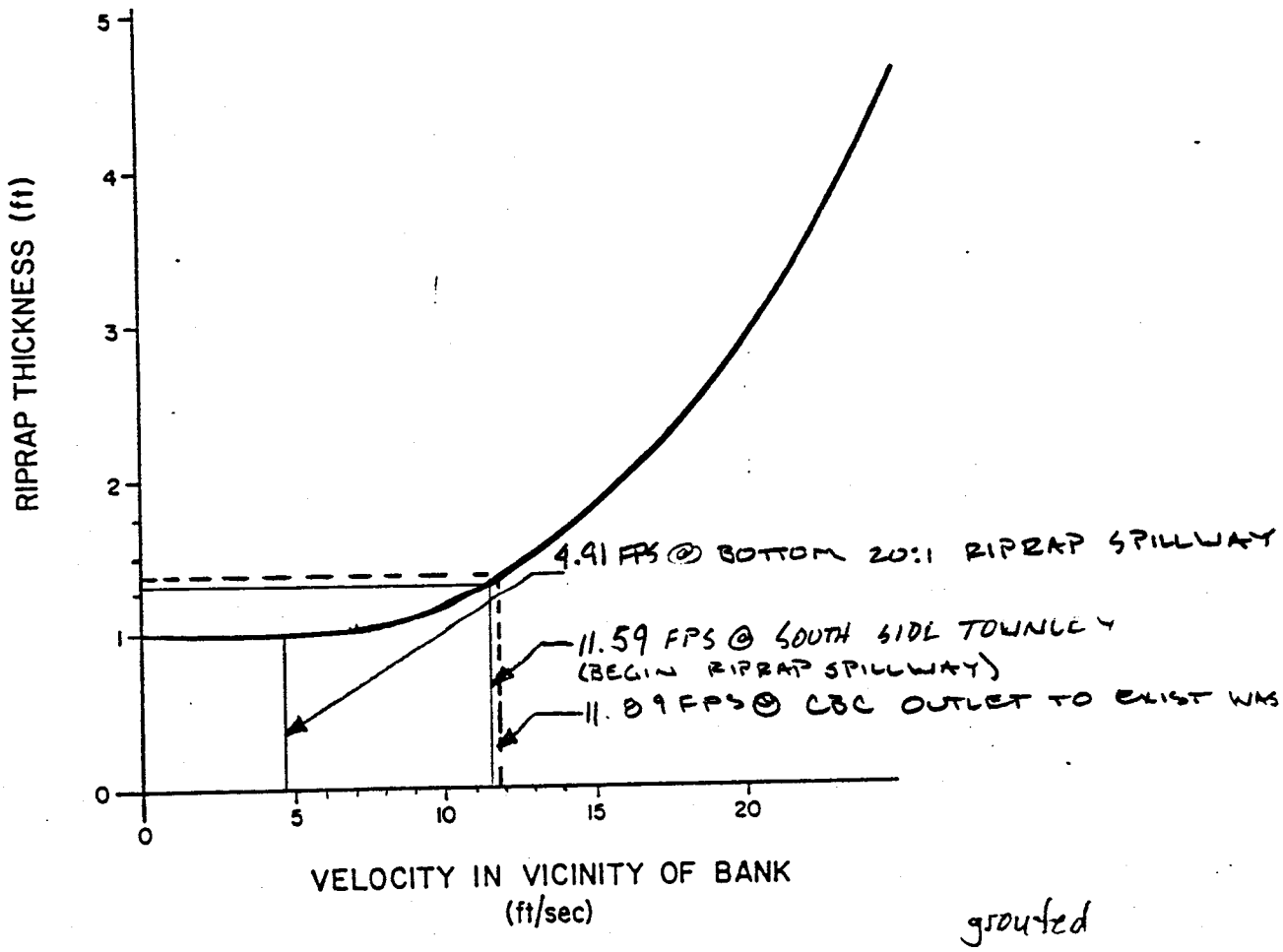

grouted

Figure 57. Required blanket thickness as a function of flow velocity.

Rock Grading: Table 6 provides guidelines for rock gradation in grouted riprap installations. Six size classes are listed.

Rock Quality: Rock used in grouted rock slope-protection is usually the same as that used in ordinary rock slope-protection. However, the specifications for specific gravity and hardness may be lowered if necessary as the rocks are protected by the surrounding grout.

In addition, the rock used in grouted riprap installations should be free of fines in order that penetration of grout may be achieved.

Grout Quality and Characteristics: Grout should consist of good strength concrete using a maximum aggregate size of 3/4 in and a slump of 3 to 4 in (7.6 to 10.2 cm). Sand mixes may be used where roughness of the grout surface is unnecessary, provided sufficient cement is added to give good strength and workability.

The volume of grout required will be that necessary to provide penetration to the depths shown in table 6.

The finished grout should leave face stones exposed for one-fourth to one-third their depth and the surface of the grout should expose a matrix of coarse aggregate.

RUST ENVIRONMENT & INFRASTRUCTURE

CALCULATION SHEET

PROJECT NO. 89932

CLIENT FCDMC

SUBJECT RCP Class Calcs

Prepared By [illegible] Date 9/15/95

PROJECT 10th St. Basin #2

Reviewed By SLS Date 1/23/96

Approved By ____ Date ____

Calcs based on Concrete Pipe Design Manual & ASTM C76

60" EQUALIZER PIPES

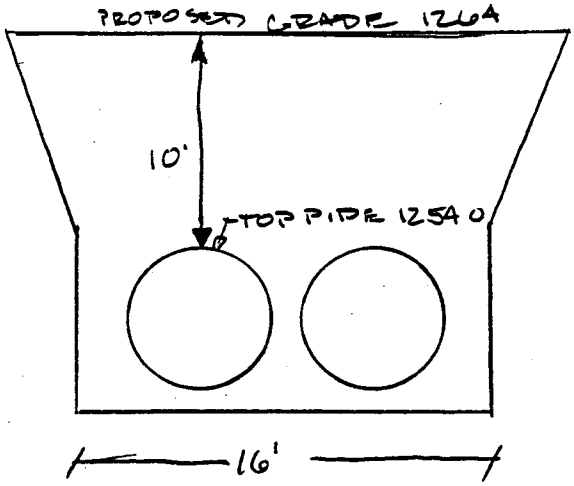

1. Earth Load
   a. From Table 28A Earth Load = 6555 lb/ft for 100 pcf soil
   b. Per ATL Geotech Report, Exist Material Weight = 130 pcf
   c. ∴ 6555 X 1.30 = 8521.5 lb/ft
2. Live Load = ∅
   (Per Table 45 for H 210' truck load insignificant)
3. Type B Bedding
4. Load Factor = 1.9 (Figure 227)
5. Factor of Safety = 1.0 for .01 inch crack
6. Select Pipe Strength

$$D_{.01} = \frac{W_L + W_E}{L_f \times D} \times F.S.$$

$$D_{.01} = \frac{0 + 8521.5}{1.9 \times 5.0} \times 1.0 = 897 \text{ lb/ft}$$

Can use Class II $D_{.01}$ = 1000
OR use Class III $D_{.01}$ = 1350

Select Class III for increased F.S. and occasional O&M pickup load

RUST ENVIRONMENT & INFRASTRUCTURE

CALCULATION SHEET

PROJECT NO. 09932

CLIENT FCDMC

SUBJECT RCP Class Calcs

Prepared By [illegible] Date 9/15/95

PROJECT 16th St Basin #2

Reviewed By ECS Date 1/23/96

Approved By ____ Date ____

Calcs based on Concrete Pipe Design Manual & ASTM C-76

Basin Drain Pipes

Calcs for 36" and 24" drain pipes w/o live load.

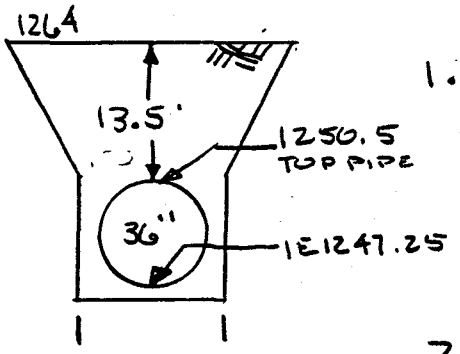

1. Earth Load for 100 PCF = 4568 lb (Table 2AA)

   For 130 PCF in situ matl ⇒ 4568 x 1.30 = 5938.4 lb/ft

2. Live Load = Ø (Per Table 45 for H ≥ 10' truck load insignificant)

3. Type B Bedding

4. Load Factor = 1.9 (Figure 227)

5. F.S. = 1.0 (for .01 inch crack)

6. $D_{.01} = \frac{W_L + W_D}{L_t \times D} \times F.S = \frac{5938.4 + 0}{1.9 \times 3} \times 1.0$

   = 1041.8 lb/ft

Can use Class II or Class III

Select Class III $D_{.01}$ = 1350 for increased F.S. & occasional O&M

RUST ENVIRONMENT & INFRASTRUCTURE

CALCULATION SHEET

PROJECT NO. 89932

CLIENT FCDMC

SUBJECT RCP Class Calcs

Prepared By ASH Date 9/15/95

PROJECT 10th St Basin #2

Reviewed By ELS Date 11/23/96

Approved By ____ Date ____

Calcs based on Concrete Pipe Design Manual & ASTM C-76

48" Basin Drain Pipe

Worst case is under Alice Avenue w/ vehicle loads
Alice Ave proposed grade 1258.5
48" IE @ ℄ Alice 1244.8

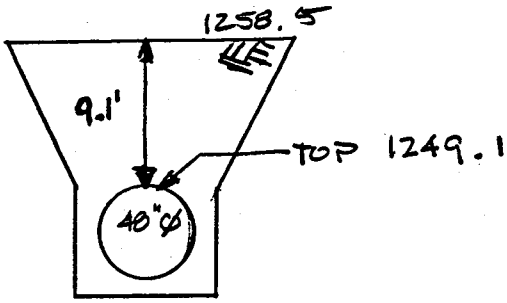

1. Earth Load for 100 pcf = 4695 lb (Table 26 A)

   For 130 pcf insitu mat'l ⇒ 4695 x 1.30 = 6103.5 lb/ft

2. Live Load for HS 20 load = 410 lb (Table 45)

3. Type B Bedding
4. Load Factor = 1.9 (Figure 227)
5. F.S. = 1.0 (Figure 227)
6.

$$D_{.01} = \frac{W_L + W_D}{L_f \times D} \times F.S.$$

$$= \frac{6103.5 + 410}{1.9 \times 4} \times 1.0$$

$$= 857 \text{ lb/ft}$$

Can use Class II or Class III

Select Class III $D_{.01}$ = 1350 for increased F.S. & occasional O&M