910 008

BRIDGE OVER THE ACDC 29TH AVE AND ARIZONA CANAL

A118.972

DMJM	PROJECT	PROJECT NO: 4252-01-03	PAGE I OF II
		BY:	DATE: 1-3-86

SUBJECT

BRIDGE OVER THE A.C.D.C.
29TH AVENUE & ARIZONA CANAL

PHOENIX, ARIZONA

Registered Professional Engineer (Structural) CERTIFICATE NO. 13302 BOYLE L. WISTE Date Signed 1/3/86 ARIZONA, U.S.A.

STRUCTURE — TWO SPAN BRIDGE
CONCRETE DECK
PRECAST CONC GIRDERS
CONCRETE ABUTMENT & FOOTINGS

Property of
Flood Control District of MC Library
Please return to
2801 W. Durango
Phoenix, AZ 85009

DESIGN LOADING — HS 20-44

DESIGN STRESS CONCRETE CLASS AA
CLASS A

PRESTRESS CONC BY MFGR

REINFORCING A 615 GRADE 60

SOIL REPORT NO: E84-94 DATED JUNE 13 1984
SERGENT HAUSKINS BECKWITH

ENGINEERING DIVISION
LIBRARY

FLOOD CONTROL DISTRICT
RECEIVED
JAN 06 '86

	CH ENG		HYDRO
	ASST		LMgt
	ADMIN		SUSP
	C & O		FILE
	ENGR		DESTROY
	FINANCE		
REMARKS			

DMJM	PROJECT 29TH AVE BRIDGE OVER THE A.C.D.C	PROJECT NO: 4252.01-03	PAGE II
		BY: BAS / DATE: 1-3-86	

SUBJECT

INDEX TO DESIGN CALCULATIONS

	SHEET NO
TITLE SHEET & INDEX	I & II
GEOMETRY	1
SLAB DESIGN	2-4
GIRDER DESIGN PRETENSION	5-22
GIRDER DESIGN POST TENSION	23-28
GIRDER DESIGN COST COMPARISON POST & PRE TENSION	29-29G
PIER DESIGN	30-47
ABUTMENT DESIGN	48-73
TEMPORARY BRIDGE	84-93D
SPECIAL PROVISIONS	94-99
QUANTITIES	100-129
WINGWALL	130-137
QUANTITIES	138-145

DMJM	PROJECT: 29th Ave	PROJECT NO:		PAGE
		BY: GIS	DATE: 1/31/85	1
SUBJECT: Geometry		BAS	1/2/86	

Bridge Deck Elevations

cross slope = .015'/'

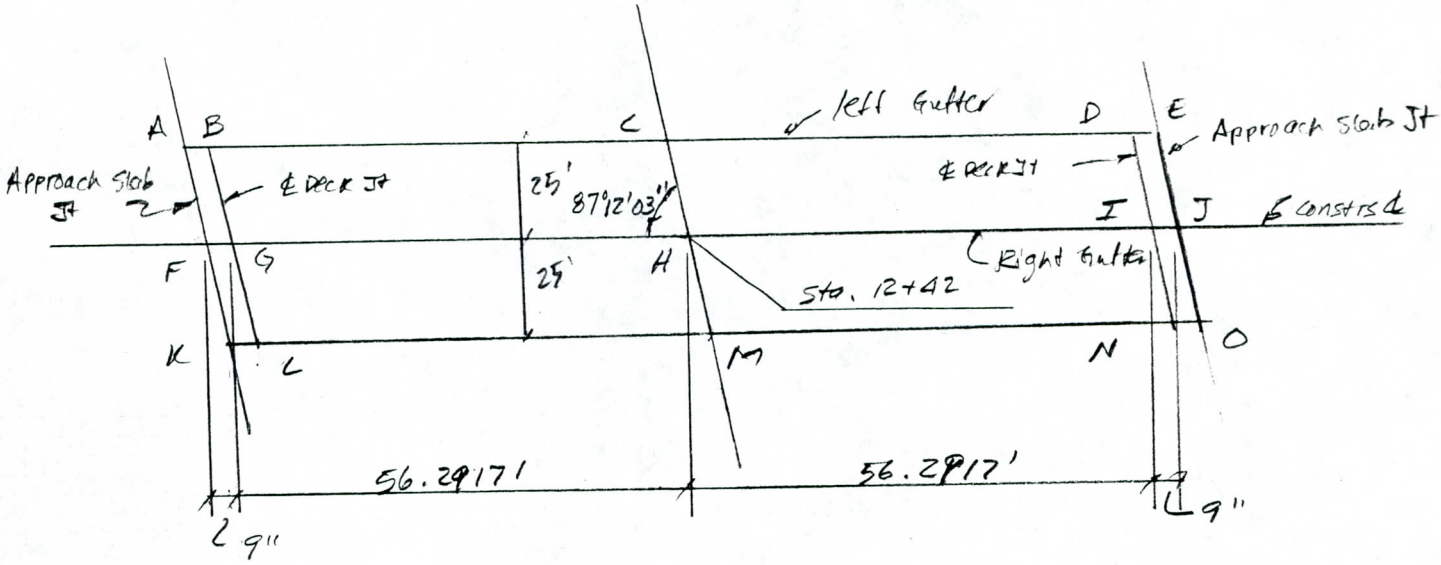

Point	Station	Offset	Elevation
A	11+83.7360	25'	35.0665
B	11+84.4660		35.0519
C	12+40.7777		33.8418
D	12+97.0694		32.6303
E	12+97.8194	25	32.6142
F	11+84.9583	0	35.4169
G	11+85.7083		35.4015
H	12+42		34.1904
I	12+98.2917		32.9789
J	12+99.0417	0	32.9628
K	11+86.1806	25	35.0166
L	11+86.9306		35.0006
M	12+43.2223		33.7892
N	12+99.5140		32.5777
O	13+00.2640	25	32.5616

DMJM	PROJECT: 29th Ave	PROJECT NO:	PAGE
		BY: GIS / DATE: 1/28/85	2
SUBJECT: Slab Design		BAS 1/2/86	

Girder spacing = 7'-6"

Effective span = 7.5 - 1' = 6.5'

#5 @ 6½"
214 @ 6.5" × 1 = 214 #6
428 #5 × 30
#5 @ 6½"
114' × 1.5 = 116
116 × 12 / 6.5 = 214

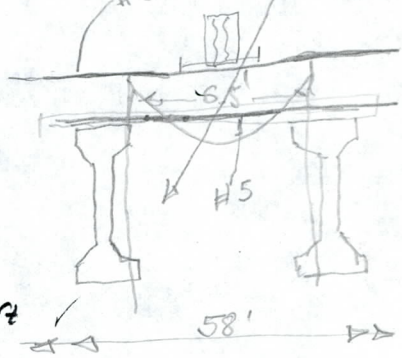

Dead loads

slab = (8/12)(.15) = .1 k/ft

Asphalt = (2/12)(.144) = .024 k/ft

.124 k/ft

$M_{DL} = (.124)(6.5)^2/10 = .524$ k-ft/ft (wL²/10)

w ft

Live loads

$M_{LL+I} = \left(\frac{6.5 + 2}{32}\right) \times 16 \times 1.33 \times .8 = 4.42$ k-ft/ft

I (cont.)

total = 4.944 k-ft/ft

Capacity

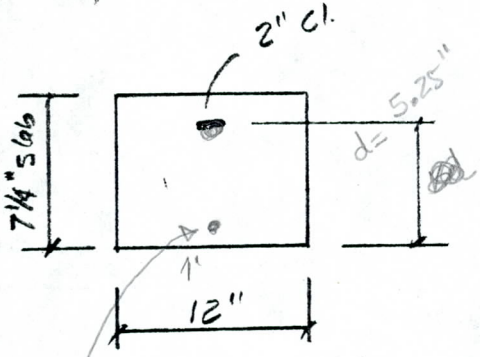

Working stress design:

f'c = 4000 psi ⇒ fc = 1600 psi

fy = 60000 psi ⇒ fs = 24000 psi

n = 8 → 8.B

#5 @ 6½" ⇒ As = .57 in²/ft

use

$M_{cap} = 5.023$ k-ft/ft > 4.944 OK

428 #5 × 30' top steel 58

Distribution steel

% = 220 / √6.5 = 86 ⇒ 67% in middle ½ of slab

220

As

= .67 × .57 = .38 in²/ft

½ of span = 6.5/2 = 3.25' ⇒ 3.25 × .38 = 1.235 in²

⇒ 4 - #5

2 - #5 in outer quarters

DMJM	PROJECT 29th Ave	PROJECT NO:	PAGE
		BY: GIS / DATE: 1/28/85	3
SUBJECT Slab Design		BAS 1/2/86	

Negative Moment Reinf. over Pier

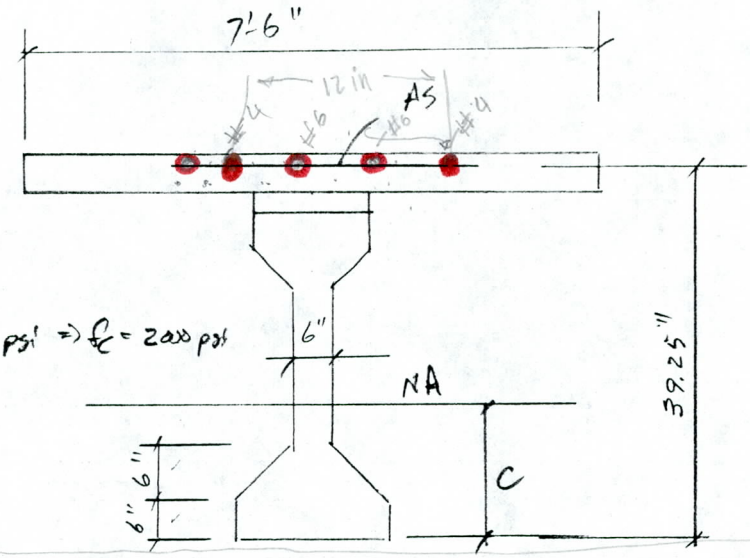

f'_c Girder = 5000 psi ⇒ f_c = 2000 psi

$n = 7$

18"

Spans = 2 @ 55'-9" ✓ = 14'-1 + 2'-1 + 2

pier

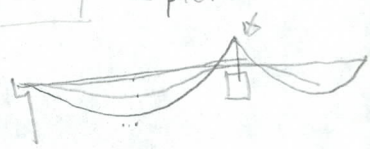

Moments

$M_{DL\ Comp} = .313 \times 55.75^2 / 8 = 121.6$ kft ✓

Live load:

$DF = 7.5/5.5 = 1.3636$ ✓

$I = \dfrac{50}{125 + 55.75} = 27.66\%$ ✓

$M_{LL+I} = (*442)(1.3636)(1.2766)/2 = 384.7$ kft ✓

* 442 from AISC Moments Shears & Reactions for Highway Bridge (Lane Loading)

Total = 506.3 kft ✓

121.6
+ 384.7
506.3

DMJM	PROJECT: 29th Ave	PROJECT NO:		PAGE
		BY: GIS	DATE: 1/28/85	4
SUBJECT: Slab Design		BAS	1/2/86	

Negative Moment Reinf over Pier (cont)

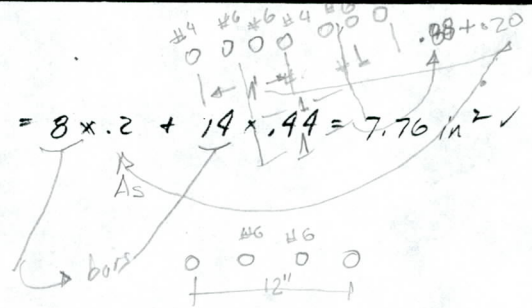

Try 2-#6 inbetween #4 @ 1'-0" $\Rightarrow A_s = 8 \times .2 + 14 \times .44 = 7.76 \text{ in}^2$ ✓

Assume NA fall in web (working stress design)

NA

$$(7)(7.76)(39.25 - c) = (6)(c)(c/2) + (6)(6)(c-6-2) + (2)(6)(6)(c-3)$$

$$3c^2 + 162.32\,c - 2636.06 = 0 \checkmark$$

$$\Rightarrow c = 13.0786'' \quad \text{(Assumption correct)}$$

$$I = (1/12)(6)(13.0786)^3 + (6)(13.0786)(13.0786/2)^2 + 2 \times (1/12)(6)(6)^3$$
$$+ 2 \times (6)(6)(13.0786-3)^2 + (1/36)(6)(6)^3 \times 2 + (1/2)(6)(6)(13.0786-6-2)^2$$
$$+ (7)(7.76)(39.25 - 13.0786)^2 = 49746 \text{ in}^4 \checkmark$$

$$M_{cap\ steel} = (24)(49746)/(39.25 - 13.0786)/7\ /12 = 543^{k\text{-}ft} \checkmark$$

> 506.3 OK

$$M_{cap\ concrete} = (2)(49746)/13.0786/12 = 633^{k\text{-}ft} \checkmark$$

use 2-#6 inbetween #4 @ 1'-0"

543 > 506

DMJM	PROJECT: 29th Ave	PROJECT NO:		PAGE
		BY: GIS	DATE: 1/28/85	5
SUBJECT: Girder Design		BAS	1/2/86	

Interior Girder

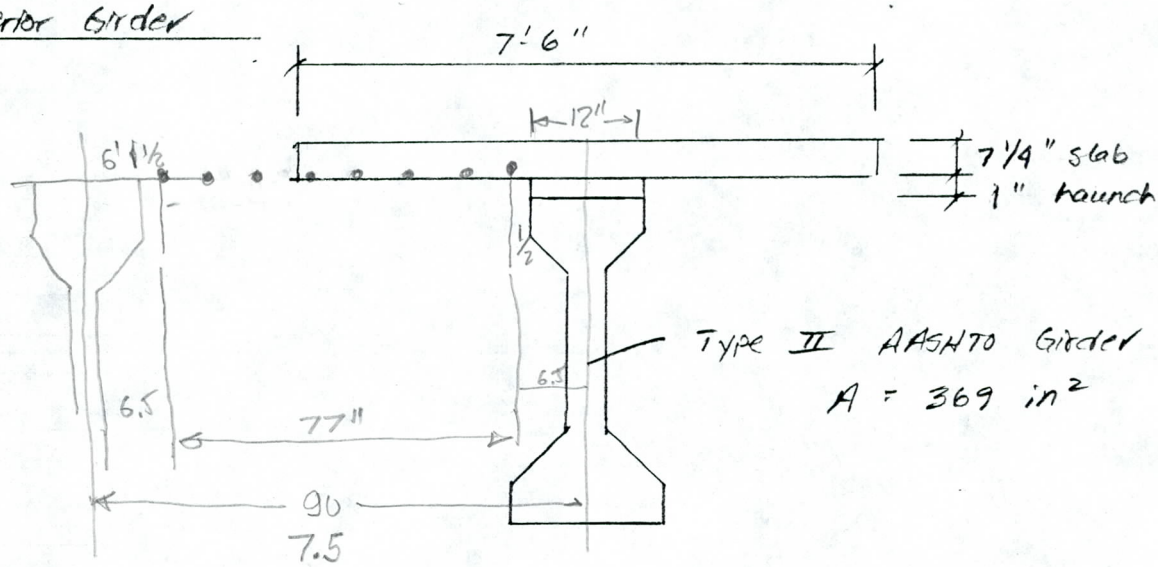

Dead Loads

Non-Composite

slab = (7.25/12)(7.5)(.15) = .680 k/ft ✓

Haunch = (1/12)(1.0)(.15) = .013 k/ft ✓

Girder = (369/144)(.15) = .384 k/ft ✓

1.077 k/ft ✓

Diaph. = (9/12)(7.5 - .5)(3)(.15) = 2.36 k ✓

Composite

Sidewalk = (9.5/12)(6'-6 1/2")(.15) / 8 = .097 k/ft ✓

Curb = (13.5/12)(9/12)(.15) / 8 = .016 k/ft ✓

Rail = .06 x 2 / 8 = .015 k/ft ✓

16" water line = .200 / 8 = .025 k/ft ✓

Other utilities = .01 k/ft = .01 k/ft ✓

Asphalt = (2/12)(50)(.144) / 8 = .150 k/ft ✓

.313 k/ft ✓

DMJM	PROJECT: 29th Ave	PROJECT NO:		PAGE
		BY: GLS	DATE: 1/28/85	6
SUBJECT: Girder Design		BAS	1/2/86	

Exterior Girder

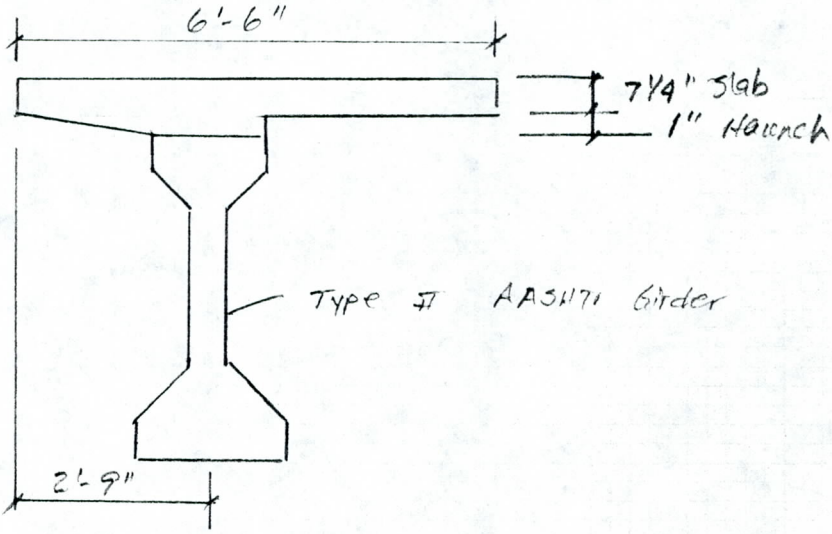

Dead Loads

Non Composite

Slab = (7.25/12)(6.5)(.15) = .589 k/ft ✓

Haunch = (1/12)(1.0)(.15) + (1/2)(2.25)(1/12)(.15) = .027 k/ft ✓

Girder = .384 k/ft ✓

1.00 k/ft ✓

Diaph. = 1/2 × 2.36 = 1.18 k ✓

Composite

DL = .313 k/ft (same as interior) ✓

DMJM	PROJECT: 29th Ave	PROJECT NO:		PAGE
		BY: GIS	DATE: 1/28/85	7
SUBJECT: Girder Design		BAS	1/2/86	

Live Loads

Interior Girder

$$DF = 7.5/5.5 = 1.3636 \checkmark$$

$$I = \frac{50}{125 + 55.75} = 27.66\% \checkmark$$

Exterior Girder

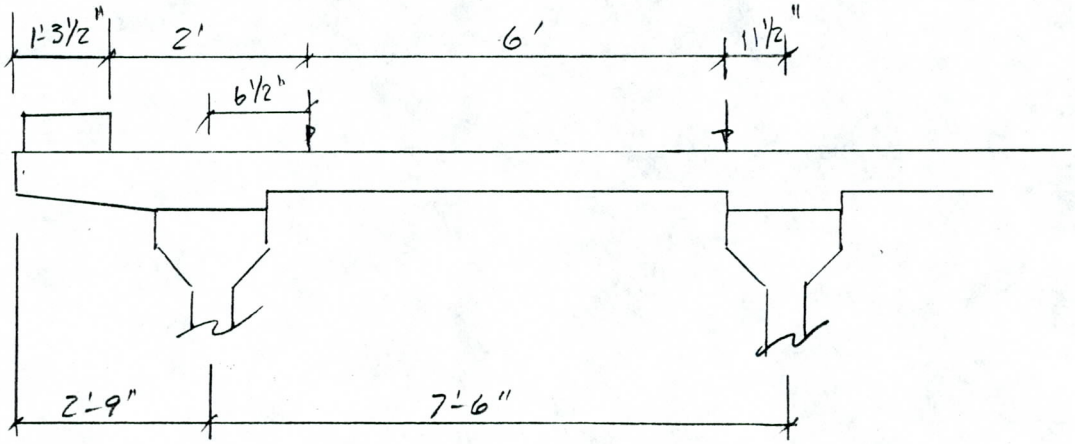

$$DF = [(7.5 - 6.5/12) + 11.5/12] \div 7.5 = 1.0556 \checkmark$$

DMJM	PROJECT: 29th Ave	PROJECT NO:		PAGE
		BY: GIS	DATE: 1/28/85	8
SUBJECT: Girder Bearing Design		BAS	1/2/86	

Reactions - Interior Girder

Pier

DL NC = (1.077)(55.75)/2 + 2.36/2 = 31.20 K ✓

DL C = (.313)(55.75) × 5/8 = 10.91 K ✓

LL = (*70.6/2)(1.3636) = 48.14 K ✓

(* From AISC Moments Shears & Reactions for Bridges)

Total = 90.25 K ✓

Abutment

DL NC = 31.20 K ✓

DL C = (.313)(55.75) × 3/8 = 6.54 K ✓

LL = (*57.28/2)(1.3636) = 39.05 K ✓

76.80 K ✓

Reactions - Exterior Girder

Pier

DL NC = (1.0 X 55.75)/2 + 1.18/2 = 28.47 K ✓

DL C = 10.91 K ✓

LL = (70.6/2)(1.0556) = 37.26 K ✓

76.64 K ✓

Abutment

DL NC = 28.47 K ✓

DL C = 6.54 K ✓

LL = (57.28/2)(1.0556) = 30.23 K ✓

65.24 K ✓

DMJM	PROJECT: 29th Ave	PROJECT NO:		PAGE
		BY: GIS	DATE: 1/28/84	9
SUBJECT: Girder Bearing Design		BAS	1/2/86	

Try 8" x 16" pad

Total Movement* = .000006 x 55.75 x 12 x 70 = .28" ✓

* This movement will probably never occur because the Abutments are attached to the slab

Provide 1/2" unlaminated pad (neoprene)

Maximum pressure

@ Pier & interior Girder

$$= \frac{90250}{8 \times 16} = 705 \text{ psi} \approx 800 \text{ psi say OK} \checkmark$$

Minimum Pressure

@ Abutment & Exterior Girder

$$= \frac{28470 + 6540}{8 \times 16} = 273 \text{ psi} > 200 \text{ psi OK} \checkmark$$

DMJM	PROJECT: 29th Ave	PROJECT NO:	PAGE
		BY: GIS / DATE: 1/29/84	10
SUBJECT: Girder Design		BAS 1/2/86	

Spans

Simple span for Non Composite Loads
Continuous span for Composite Loads

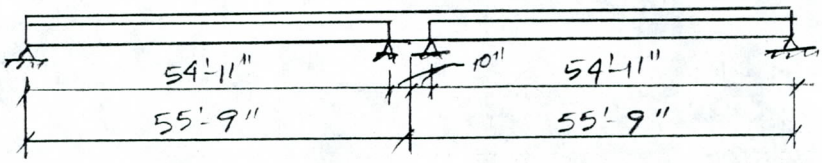

Moments

$M_{Girder} = (.384)(54.92)^2/8 = 144.8$ k-ft ✓

$M_{Slab, Haunch, Diaph} = (.680 + .013)(54.92)^2/8 + (2.36)(54.92)/4 = 293.6$ k-ft ✓

$M_{DL\ composite} = (.313)(.0703)(55.75)^2 = 68.4$ k-ft ✓

$M_{LL+I} = 583.79/2 \times 1.3636 \times 1.2766 = \underline{508.1}$ k-ft ✓

1014.9 ✓

Section Properties

Non Composite : (Girder)

$A = 369\ in^2$ $I_x = 50980\ in^4$ $y_b = 15.83''$

$r^2 = 138.16$

Composite :

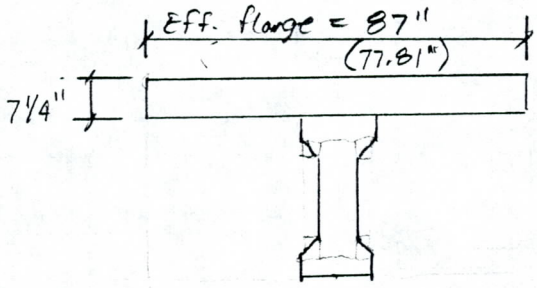

$f'c_{slab} = 4000$ psi $\Rightarrow E = 3605$ ksi

$f'c_{Girder} = 5000$ psi $\Rightarrow E = 4031$ ksi

$n = .8943$

$\Rightarrow$ Eff. flange $= 87 \times .8943 = 77.81''$ ✓

$f_{ci} = 4000$ psi $\Rightarrow E_{ci} = 3605$ ksi

$A_c = 933\ in^2$

$I_c = 179759\ in^4$

$NA_c = 30.22''$

with 87" flange

$A = 999.75$

$NA = 30.8424$

$I = 185557$

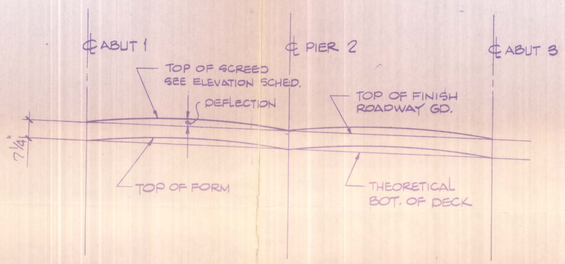

CAMBER DIAGRAM

N.T.S.

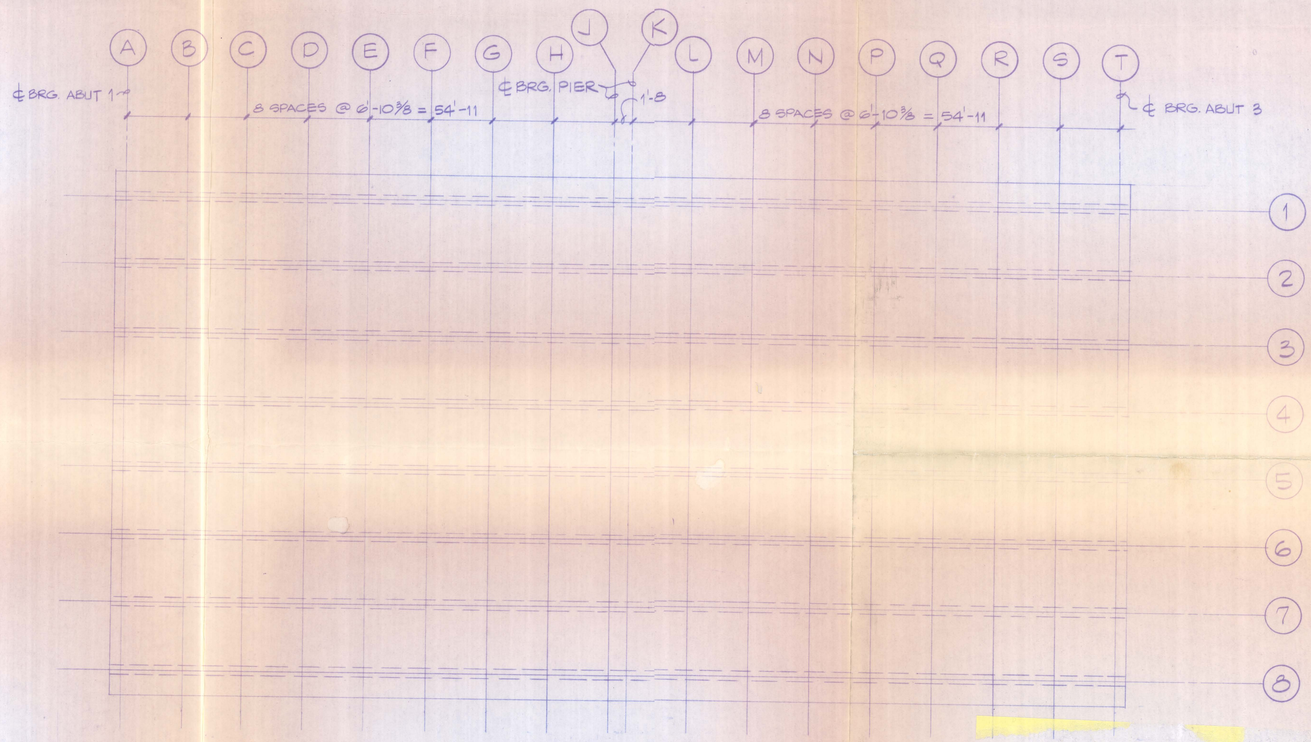

BRIDGE PLAN VIEW

NOTE:

1. GRID LINES A THRU T ARE AT ℄ OF BRG POINTS AND AT ARBITRARY EQUAL SPACES BETWEEN.
2. GRID LINES 1 THRU 8 ARE AT ℄ PRECAST GIRDERS.
3. GRID INTERSECTION ELEVATIONS ARE AS INDICATED IN THE SCHEDULE BELOW.

	A	B	C	D	E	F	G	H	J	K	L	M	N	P	Q	R	S	T	
T.O.D.	35.06	34.91	34.77	34.62	34.47	34.32	34.17	34.03	33.88	33.84	33.70	33.55	33.40	33.25	33.10	32.96	32.81	32.66	
T.O.S.	35.06	34.93	34.82	34.68	34.53	34.38	34.22	34.05	33.88	33.84	33.72	33.60	33.46	33.31	33.16	33.01	32.83	32.66	1
T.O.F.	34.46	34.33	34.21	34.07	33.93	33.77	33.61	33.45	33.28	33.24	33.12	32.99	32.85	32.71	32.55	32.40	32.23	32.06	
T.O.D.	35.16	35.01	34.87	34.72	34.57	34.42	34.27	34.13	33.98	33.94	33.80	33.65	33.50	33.35	33.20	33.06	32.91	32.76	
T.O.S.	35.16	35.03	34.92	34.78	34.63	34.48	34.32	34.15	33.98	33.94	33.82	33.70	33.56	33.41	33.26	33.11	32.93	32.76	2
T.O.F.	34.56	34.43	34.31	34.17	34.03	33.87	33.71	33.55	33.38	33.34	33.22	33.09	32.95	32.81	32.65	32.50	32.33	32.16	
T.O.D.	35.27	35.12	34.98	34.83	34.68	34.53	34.38	34.24	34.09	34.05	33.91	33.76	33.61	33.46	33.31	33.17	33.02	32.87	
T.O.S.	35.27	35.14	35.03	34.89	34.74	34.59	34.43	34.26	34.09	34.05	33.93	33.81	33.67	33.52	33.37	33.22	33.04	32.87	3
T.O.F.	34.67	34.54	34.42	34.28	34.14	33.98	33.82	33.66	33.49	33.45	33.33	33.20	33.06	32.92	32.76	32.61	32.44	32.27	
T.O.D.	35.38	35.23	35.08	34.94	34.79	34.64	34.49	34.35	34.20	34.16	34.02	33.87	33.72	33.57	33.42	33.28	33.13	32.98	
T.O.S.	35.38	35.25	35.14	35.00	34.85	34.70	34.54	34.37	34.20	34.16	34.04	33.92	33.78	33.63	33.48	33.33	33.15	32.98	4
T.O.F.	34.78	34.65	34.53	34.39	34.25	34.09	33.93	33.77	33.60	33.56	33.44	33.31	33.17	33.03	32.87	32.72	32.55	32.38	
T.O.D.	35.29	35.14	35.00	34.85	34.70	34.55	34.40	34.26	34.11	34.07	33.93	33.78	33.63	33.48	33.33	33.19	33.04	32.89	
T.O.S.	35.29	35.16	35.01	34.91	34.76	34.61	34.45	34.28	34.11	34.07	33.95	33.83	33.69	33.54	33.39	33.24	33.06	32.89	5
T.O.F.	34.69	34.56	34.44	34.30	34.16	34.02	33.84	33.68	33.51	33.47	33.35	33.22	33.08	32.94	32.78	32.63	32.46	32.29	
T.O.D.	35.17	35.02	34.88	34.73	34.58	34.43	34.28	34.14	33.99	33.95	33.81	33.66	33.51	33.36	33.21	33.07	32.92	32.77	
T.O.S.	35.17	35.04	34.93	34.79	34.64	34.49	34.33	34.16	33.99	33.95	33.83	33.71	33.57	33.42	33.27	33.12	32.94	32.77	6
T.O.F.	34.57	34.44	34.32	34.18	34.04	33.88	33.72	33.56	33.39	33.35	33.23	33.10	32.96	32.82	32.66	32.51	32.34	32.17	
T.O.D.	35.05	34.90	34.76	34.61	34.46	34.31	34.16	34.02	33.87	33.83	33.69	33.54	33.39	33.24	33.09	32.95	32.80	32.65	
T.O.S.	35.05	34.92	34.81	34.67	34.52	34.37	34.21	34.04	33.87	33.83	33.71	33.59	33.45	33.30	33.15	33.00	32.82	32.65	7
T.O.F.	34.45	34.32	34.20	34.06	33.92	33.76	33.60	33.44	33.27	33.23	33.11	32.98	32.84	32.70	32.54	32.39	32.22	32.05	
T.O.D.	34.92	34.77	34.63	34.48	34.33	34.18	34.03	33.89	33.74	33.70	33.56	33.41	33.26	33.11	32.96	32.82	32.67	32.52	
T.O.S.	34.92	34.79	34.66	34.54	34.39	34.24	34.08	33.91	33.74	33.70	33.58	33.46	33.32	33.17	33.02	32.87	32.69	32.52	8
T.O.F.	34.32	34.19	34.07	33.93	33.79	33.63	33.47	33.31	33.14	33.10	32.98	32.85	32.71	32.57	32.41	32.26	32.09	31.92	

ELEVATION SCHEDULE

NOTE:

1. T.O.D. DENOTES TOP OF DECK ELEVATION. (FINAL)
2. T.O.S. DENOTES TOP OF SCREED ELEVATION.
3. T.O.F. DENOTES TOP OF FORM ELEVATION.
4. ELEVATIONS GIVEN ARE IN DECIMAL FEET. (EL +1200.00)

FLOOD CONTROL DISTRICT of MARICOPA CO.
3335 West Durango Street • Phoenix, Arizona 85009 • Tel. (602) 262-1501

Drawn By: MP
Designed By: LU
Checked By: TE
Date: 5-28-86

29th. AVENUE BRIDGE OVER THE A.C.D.C.

BRIDGE DECK

ELEVATION SCHEDULE

Recommended By:

Approved By:
Chief Engineer and General Manager
FLOOD CONTROL DISTRICT of MARICOPA CO.

DMJM/Adam, Hamlyn, Anderson
planning • engineering • systems • economics
4751 N. 15th St. Phoenix, Arizona 85014 264-1397

SHEET S-11
24A OF 24

DMJM	PROJECT: 29th Ave	PROJECT NO:		PAGE
		BY: GIS	DATE: 1/30/85	11
SUBJECT: Girder Design		BAS	1/2/86	

Section Properties (cont)

Try 16 strands - Jack to .7 f_s' $\quad A_s^* = .153 \times 16 = 2.448 \text{ in}^2$ ✓

$$EMS = \frac{8\times2 + 6\times4 + 2\times6}{16} = 3.25'' \checkmark$$

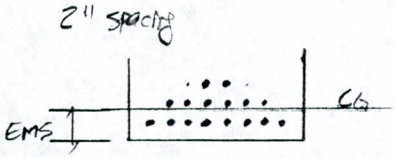

@ Mid span

$$e_G = 15.83 - 3.25 = 12.58'' \checkmark$$

$$e_c = 30.22 - 3.25 = 26.97 \checkmark$$

$$e_G y_b / r_G^2 = 12.58 \times 15.83 / 138.16 = 1.4414 \checkmark$$

$$e_G y_t / r_G^2 = 12.58 \times (36 - 15.83) / 138.16 = 1.8366 \checkmark$$

Kern Limits

$$r^2/y_t = 138.16/15.83 = 8.73'' \text{ above CG} \checkmark$$

$$r^2/y_b = 138.16/(36-15.83) = 6.85'' \text{ below CG} \checkmark$$

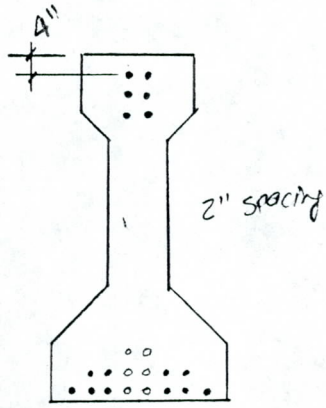

@ End

EE

$$CG \text{ (from bottom)} = \frac{6\times2 + 4\times4 + 2\times32 + 2\times30 + 2\times28}{16}$$

$$= 13.17'' \checkmark$$

(2.83" below CG)

DMJM	PROJECT: 29th Ave	PROJECT NO:		PAGE
		BY: GIS	DATE: 1/30/85	12
SUBJECT: Girder Design		BAS	1/2/86	

Stresses without Prestress

Load	Top fiber	Bottom Fiber
Girder	$\frac{144.8 \times 12000 (36-15.83)}{50980}$ = 687 psi ✓	$\frac{144.8 \times 12000 \times 15.83}{50980}$ = 540 psi ✓
Slab, Haunch, Diaph	$\frac{293.6 \times 12000 (36-15.83)}{50980}$ = 1394 psi ✓	$\frac{293.6 \times 12000 \times 15.83}{50980}$ = 1094 psi ✓
DL composite	$\frac{68.4 \times 12000 (36-30.22)}{179759}$ = 26 psi ✓	$\frac{68.4 \times 12000 \times 30.22}{179759}$ = 138 psi ✓
LL+I	$\frac{508.1 \times 12000 (36-30.22)}{179759}$ = 196 psi ✓	$\frac{508.1 \times 12000 \times 30.22}{179759}$ = 1025 psi ✓
Total	2303 psi ✓	2797 psi ✓

DMJM	PROJECT: 29th Ave	PROJECT NO:		PAGE 13
		BY: GIS	DATE: 1/30/85	
SUBJECT: Girder Design		BAS	1/2/86	

Prestress Losses

Shrinkage

$$SH = 17000 - 150(40) = 11{,}000 \text{ psi} \checkmark$$

Elastic Shortening

$$ES = E_s/E_{ci} \times f_{cir}$$

$$f_{cir} = \frac{m f_s' A_s^*}{A_G} + \frac{m f_s' e_G^2 A_s^*}{I_G} - \frac{M_{DLG}\, e_G}{I_G}$$

$$m = \frac{\% f_s' - REL_1 + \frac{(E_s/E_{ci}) M_{DLG}\, e_G}{I_G}}{f_s' + f_s'(E_s/E_{ci})\left[\frac{A_s^*}{A_G} + \frac{e_G^2 A_s^*}{I_G}\right]}$$

$$REL_1 = \% f_s' \left[\frac{\log t}{10}\left(\frac{\% f_s'}{.85 f_s'} - .55\right)\right]$$

Assume release @ 18 hr.

$$REL_1 = .7 \times 270000 \left[\frac{\log 18}{10}\left(\frac{.7}{.85} - .55\right)\right] = 6489 \text{ psi} \checkmark$$

$$m = \frac{.7 \times 270000 - 6489 + \frac{(28000/3605)(144.8 \times 12000)(12.58)}{50980}}{270000 + 270000(28000/3605)\left[\frac{2.448}{369} + \frac{12.58^2 \times 2.448}{50980}\right]} = .6198 \checkmark$$

$< .7$ OK

$$f_{cir} = \frac{.6198 \times 270000 \times 2.448}{369} + \frac{.6198 \times 270000 \times 12.58^2 \times 2.448}{50980} - \frac{144.8 \times 12000 \times 12.58}{50980}$$

$$= 1953 \text{ psi} \checkmark$$

$$ES = (28000/3605)\, 1953 = 15{,}169 \text{ psi} \checkmark$$

DMJM	PROJECT: 29th Ave	PROJECT NO:		PAGE
		BY: GIS	DATE: 1/30/85	14
SUBJECT		BAS	1/2/86	

Prestress Losses (cont)

Creep

$CR_c = 12 f_{cir} - 7 f_{cds}$

$$f_{cds} = \frac{(M_{DL\,SHD})e_G}{I_G} + \frac{(M_{DL\,C})e_C}{I_C}$$

$$= \frac{293.6 \times 12000 \times 12.58}{50980} + \frac{68.4 \times 12000 \times 26.97}{179759} = 993 \text{ psi} \checkmark$$

$CR_c = 12 \times 1953 - 7 \times 993 = 16{,}488$ psi ✓

Relaxation

Low lax strands

$CR_s = 5000 - .1\,ES - .05\,(SH + CR_c)$

$= 5000 - 15169 \times .1 - .05\,(11000 + 16488) = 2109$ psi ✓

Total Loss = 44766 psi

DMJM	PROJECT: 29th Ave	PROJECT NO:		PAGE 15
		BY: GIS	DATE: 1/30/85	
SUBJECT: Girder Design		BAS	1/2/86	

Prestress Stresses

Jacking

$f_j = .7 \times 270000 = 189000$ psi ✓

$F_j = 189000 \times 2.448 = 462.672^K$ ✓

Transfer

$f_t = 189000 - \overset{ES}{15169} - \overset{REL_1}{6489} = 167342$ psi ✓

$F_t = 167342 \times 2.448 = 409.653^K$ ✓

$f_{ai} = \frac{409653}{369} = 1110$ psi ✓

Final

$f_f = 189000 - \overset{LOSS}{44766} = 144234$ psi ✓

$F_f = 144234 \times 2.448 = 353.085^K$ ✓

$f_a = \frac{353085}{369} = 957$ psi ✓

Check effective prestress $= \frac{353.085}{270 \times 2.448} = 53\% > 50\%$ OK! ✓

DMJM	PROJECT: 29th Ave	PROJECT NO:		PAGE
		BY: GIS	DATE: 1/30/85	16
SUBJECT: Girder Design		BAS	1/2/86	

Combined stresses under loading stages

Tranfer

Top fiber @ .4 pt = 1110 (1 − 1.8366) + .96 × 687 = −269 psi ✓

Bottom fiber @ .4 pt = 1110 (1 + 1.4414) − .96 × 540 = 2192 psi ✓

Allowable compression = .6 × 4000 = 2400 psi OK ✓

Full Design Load

Top fiber @ midspan = 957 (1 − 1.8366) + 2303 = 1502 psi ✓

Bottom fiber @ midspan = 957 (1 + 1.4414) − 2797 = −461 psi ✓

Allowable compression = .4 × 5000 = 2000 psi OK ✓

Allowable tension = $6\sqrt{5000}$ = 424 psi NG ✓

Increase Jacking Force

Jack to .72 f'c

Prestress Losses

From personal program

SH = 11000 psi

ES = 15631 psi

REL1 = 7249 psi

CR_c = 17203 psi

CR_s = 2027 psi

Total Loss = 45861 psi

Prestress Stresses

Jacking

f_j = .72 × 270000 = 194400 psi

F_j = 194400 × 2.448 = 475.891 K

Transfer

f_t = 194400 − 15631 − 7249 = 171520 psi

F_t = 171520 × 2.448 = 419.881 K

f_{ai} = 419881 / 369 = 1138 psi

Final

f_f = 194400 − 45861 = 148539 psi

F_f = 148539 × 2.448 = 363.623 K

f_a = 363623 / 369 = 985 psi

DMJM	PROJECT: 29th Ave	PROJECT NO:		PAGE 18
		BY: GIS	DATE: 1/30/85	
SUBJECT: Girder Design		BAS	1/2/86	

Combined stresses under loading stages

Transfer

Top fiber @ .4 pt = 1138 (1 − 1.8366) + .96 × 687 = −293 psi ✓

Bottom fiber @ .4 pt = 1138 (1 + 1.4414) − .96 × 540 = 2260 psi ✓
< 2400 OK

Full Design Load

Top fiber @ midspan = 985 (1 − 1.8366) + 2303 = 1479 psi < 2000 OK ✓

Bottom fiber @ midspan = 985 (1 + 1.4414) − 2797 = −392 psi ≥ −424 OK ✓

Use 16 strands EMS = 3.25" EE = 13.75"

f'_c = 5000 psi

f'_{ci} = 4000 psi

Jack to 475.89 K Total
(29.74 K each strand)

DMJM	PROJECT: 29th Ave	PROJECT NO:		PAGE
		BY: GIS	DATE: 1/30/85	19
SUBJECT: Girder Design		BAS	1/2/86	

Flexural Strength

$$\rho^* = \frac{2.448}{(77.81)(36+7.25-3.25)} = .0007865$$

$$M = 1.3\left[144.8 + 293.6 + 68.4 + 5/3 \times 508.1\right] = 1759.7 \text{ k-ft}$$

$$f_{su}^* = 270\left(1 - \frac{.5 \times .0007865 \times 270}{4}\right) = 262.833 \text{ ksi}$$

$$1.4 \times (36+7.25-3.25)(.0007865)(262.833/4) = 2.89' \Rightarrow \text{Rectangular Section}$$

$$M_u = \left[(2.448)(262.833)(36+7.25-3.25)\left(1 - \frac{.6 \times .0007865 \times 262.833}{4}\right)\right]/12$$

$$= 2078 \text{ k-ft} > 1759.7 \text{ k-ft} \quad \text{OK}$$

Steel percentage

$$\rho_{max} = .0007865 \times 262.833/4 = .0517 < .3 \quad \text{OK}$$

ρ_{min}

$$f_{crack} = 7.5\sqrt{5000} = 530 \text{ psi}$$

$$f_{ps} = 985(1+1.4414) = 2405 \text{ psi}$$

$$M_{cr} = \frac{(2405+530)(179759)}{30.22 \times 12000} = 1455 \text{ k-ft}$$

$$\frac{M_u}{M_{cr}} = \frac{2078}{1455} = 1.43 > 1.2 \quad \text{OK}$$

DMJM	PROJECT: 29th Ave	PROJECT NO:		PAGE 20
		BY: GIS	DATE: 1/30/85	
SUBJECT: Girder Design		BAS	1/2/86	

Camber

$$\Delta_p = \frac{L^2}{8E_{ci}I_G}\left(M_1 + M_2 - \frac{M_2}{3}\left(\frac{2a}{L}\right)^2\right]$$

@ Release $M_1 = F_t e_1$; $e_1 = Y_b - EE = 15.83 - 13. = 2.83''$ ✓

$M_2 = F_t e_2$; $e_2 = Y_b - ETS = 15.83 - 3.25 = 12.58''$ ✓

a = point of Hold down (assume .4)

$$\Delta_p = \frac{(54.92 \times 12)^2}{(8)(3605)(50980)}\left[419.881 \times 2.83 + 419.881 \times 12.58 - \frac{419.881 \times 12.58}{3}\left(\frac{2 \times .4 \times 54.92}{54.92}\right)^2\right]$$

$= 1.5785''$ ✓

Deflections of Girder

$$\Delta_{Girder}\ (@\ Release) = \frac{5wL^4}{384\,E_{ci}I_G} = \frac{(5)(.384/12)(54.92 \times 12)^4}{(384)(3605)(50980)} = .4277''$$ ✓

Camber @ Release $= 1.5785 - .4277 = 1.1508''$ ✓

Correction in camber @ release for creep and other losses

Assume creep factor $= 1.5 = C_u$

90% of transfer force

$$\Delta_S = (.9 \times \Delta_p - \Delta_{DLG})C_u = (.9 \times 1.5785 - .4277)1.5 = 1.4890 \uparrow$$ ✓

$$\Delta_{Slab\ Haunch} = \frac{(5)(.693)(54.92 \times 12)^4}{384 \times 4031 \times 50980} = .6903'' \downarrow$$ ✓

$$\Delta_{Diaph} = \frac{2.36\,(54.92 \times 12)^3}{(48)(4031)(50980)} = .0685' \downarrow$$ ✓

.7588" (NC) ✓

$$\Delta_{DL\ comp} = \frac{(5)(.313)(55.75 \times 12)^4}{384 \times 4031 \times 179759} = .0939'' \downarrow$$

Slab + Haunch + Diaph Δ @ 1/4 point (NC) =

$$\frac{(.693/12)(164.75)}{(24)(4031)(50980)}\left[659^3 - (2)(659)(164.75)^2 + 164.75^3\right] + \frac{(2.36)(164.75)}{(48)(4031)(50980)}\left[(3)(659)^2 - (4)(164.75)^2\right]$$

$= .5388''$

Final camber $= 1.4890 - .6903 - .0685 - .0939 = .6367''$ ✓

1" haunch OK

DMJM	PROJECT: 29th Ave	PROJECT NO:		PAGE
		BY: GIS	DATE: 1/30/85	21
SUBJECT: Girder Design		BAS	1/2/86	

Shear

Investigate shear in middle 1/2 of span

V_{DL} @ 1/4 PT $(55.75/4 = 13.94')$

$V_{nc} = 1.077(54.92/2 - 13.94) + 2.36/2 = 15.74^k$ ✓

$V_{comp} = .313(55.75 - 13.94) = 13.09^k$ ✓ "

V_{LL+I}

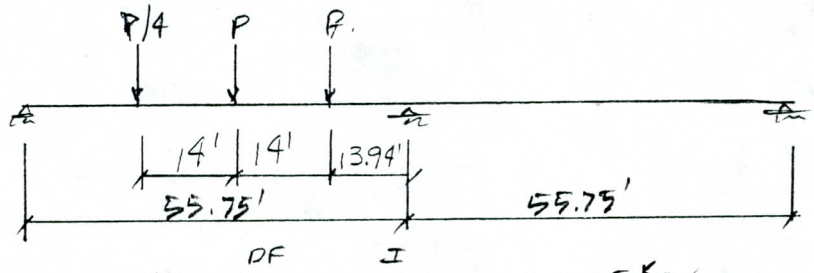

DF I

$P = 16 \times 1.3636 \times 1.2766 = 27.85^k$ ✓

$$V_{LL+I} = \frac{(27.85)(41.81)}{(4)(55.75)^3}\left[4 \times 55.75^2 + 13.94(55.75 + 41.81)\right] +$$

$$\frac{(27.85)(27.81)}{(4)(55.75)^3}\left[4 \times 55.75^2 + 27.94(55.75 + 27.81)\right] +$$

$$\frac{(6.96)(13.81)}{(4)(55.75)^3}\left[4 \times 55.75^2 + 41.94(55.75 + 13.81)\right]$$

$= 41.80^k$ ✓

$V_u = (15.74 + 13.09)1.3 + 41.80(5/3)(1.3) = 127.79^k$ ✓

$V_c = .06 \times 5 \times 6 \times .9 \times 40 = 64.8^k$ or $(180)(6)(.9 \times 40) = 38.88^k$ ← ✓

#4 stirrups

$$s = \frac{(.4)(2)(40)(.9 \times 40)}{127.79 - 38.88} = 12.95''$$ ← ✓

or $s_{min} = (.4)(40)/(.1 \times 6) = 26.67''$ ✓

DMJM	PROJECT: 29th Ave	PROJECT NO:		PAGE 22
		BY: GIS	DATE: 1/31/85	
SUBJECT: Girder Design		BAS	1/2/86	

Shear (cont)

shear @ distance "d" (3.6') from face of pier cap

$$V_{DLNC} = 1.077(54.92/2 - 4.91) + 2.36/2 = 25.47^k \checkmark$$

$$V_{DLC} = .313(55.75 - 4.91) = 15.91^k \checkmark$$

$$V_{LL+I} = \frac{(27.85)(50.84)}{(4)(55.75)^3}\left[4 \times 55.75^2 + 4.91(55.75 + 50.84)\right] +$$

$$\frac{(27.85)(36.84)}{(4)(55.75)^3}\left[4 \times 55.75^2 + 18.91(55.75 + 36.84)\right] +$$

$$\frac{(6.96)(22.84)}{(4)(55.75)^3}\left[4 \times 55.75^2 + 32.91(55.75 + 22.84)\right]$$

$$= 50.91^k$$

$$V_u = (25.47 + 15.91)1.3 + 50.91 \times 5/3 \times 1.3 = 164.1^k \checkmark$$

#4 stirrups

$$s = \frac{(.4)(2)(40)(.9)(40)}{164.1 - 38.88} = 9.2'' \checkmark$$

DMJM	PROJECT: 29th Ave	PROJECT NO:		PAGE 23
		BY: GIS	DATE: 2/12/85	
SUBJECT: Girder Design		BAS	1/2/86	

Post Tension Alternate

Section Properties - Use 4000 psi Concrete for girder & Slab

@ 1.4

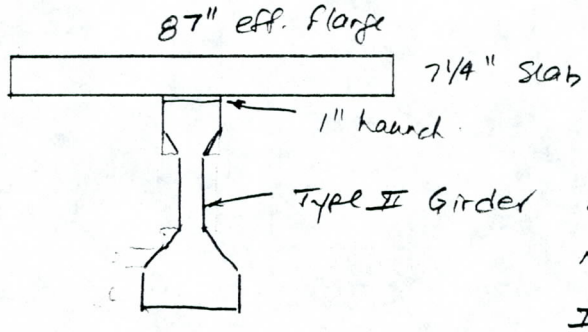

A = 369

NA = 15.83"

I = 50980 in^4

A = 1011.75 in^2 (7.0260 ft^2)

NA = 31.5330" (2.6278')

I = 197170 in^4 (9.5086 ft^4)

D = 44.25" (3.6875')

@ 2.0

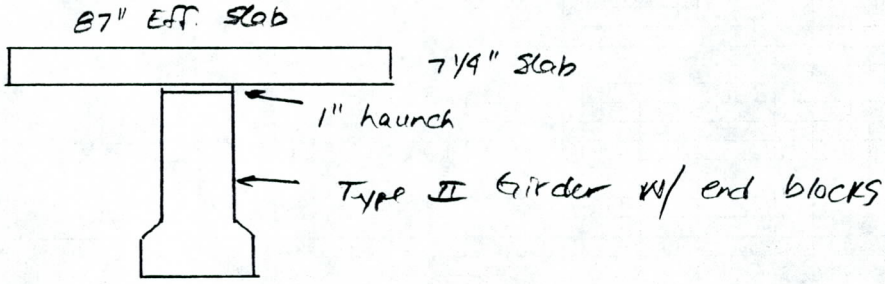

A = 1119.75 in^2 (7.7760 ft^2)

NA = 30.3724" (2.5310')

I = 214296 in^4 (10.3345 ft^4)

D = 44.25" (3.6875')

DMJM	PROJECT: 29th AVE	PROJECT NO:		PAGE
		BY: GIS	DATE: 2/7/85	24
SUBJECT: Girder Design		BAS	1/2/86	

Post Tension Alternate

Temporary Erection Design

The girder will be designed for its own dead load

Once the girder is in place it will be shored for all other loads until post tensioning occurs.

Loads & Moments

Girder weight = .384 k/ft

$M_{DL\ Girder} = .384 \times 54.92^2/8 = 144.8$ k-ft ✓

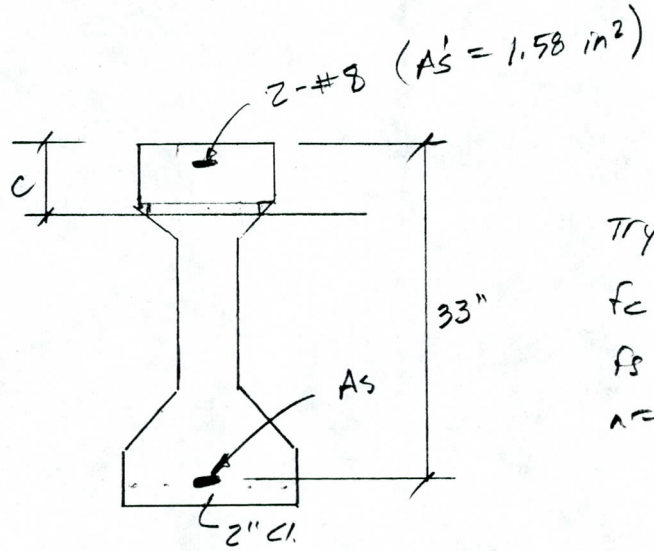

Try $A_s = 3.16$ in^2 (4-#8)

$f_c = 1600$ psi

$f_s = 24000$ psi

$n = 8$

NA: (in fillet)

$$(12)c^2/2 + \tfrac{1}{2}(c-6)^2\left(\tfrac{2}{3}(c-6)\right)\times 2 + (c-6)(12-2(c-6))(c-6)/2 + (16-1)(1.58)(c-3) = (8)(3.16)(33-c)$$

$c = 8.45''$

$$I = (1/12)(12)(6)^3 + (12)(6)(8.45-3)^2 + (1/12)(12-2\times 2.45)(2.45)^3 + (12-2\times 2.45)(2.45)(8.45-2.45/2)$$
$$+ (1/36)(2.45)(2.45)^3\times 2 + (1/2)(2.45)(2.45)(8.45-2.45\times 2/3)^2 + (16-1)(1.58)(8.45-3)^2$$
$$+ (8)(3.16)(33-8.45)^2 = 19353 \text{ in}^4 ✓$$

$M_{cap\ steel} = 24 \times 19353/(33-8.45)/8/12 = 197$ k-ft ✓ ← > 144.8 OK

$M_{cap\ conc} = 1.6 \times 19353/8.45/1200 = 305$ k-ft ✓

DMJM	PROJECT: 29th Ave	PROJECT NO:		PAGE
		BY: GIS	DATE: 2/8/85	25
SUBJECT: Girder Design		BAS	1/2/86	

Post Tension Alternate

Determine if #4 @ 1'-0" in top of slab and #5 distribution steel will handle Girder weight moment produced @ Pier

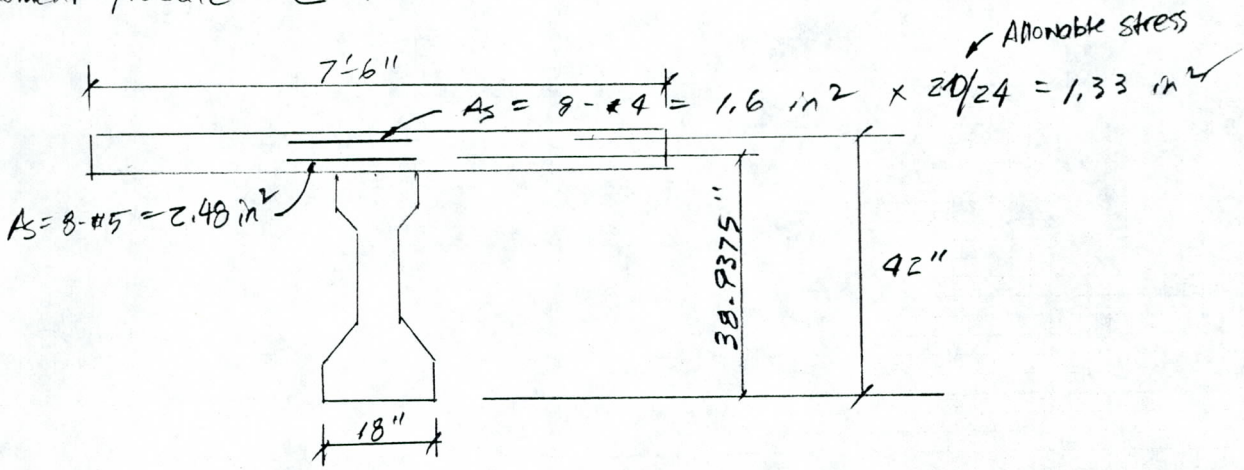

M_{cap} = 200 k-ft < 144.8 k-ft ok!

∴ Design post tension Girder to handle slab + Haunch + Draft + Composite DL + LL + I and assume the DL Girder is handled by the reinforcing steel.

see BDS computer run for Design of prestressing steel

DMJM	PROJECT: 29th Ave	PROJECT NO:		PAGE
		BY: GS	DATE: 2/11/85	26
SUBJECT: Girder Design - Post Tension Alternate		BAS	1/2/86	

Shear — See BDS Run

$V_c = .06 \times 4 \times 6 \times .9 \times 40 = 52^K$ / or $180 \times 6 \times .9 \times 40 = \underline{39^K}$ ✓

#4 @ 6" → $V_u = \frac{2 \times .4 \times 40 \times .9 \times 40}{6} + 39 = 231^K$ ✓

#4 @ 9" ⇒ $V_u = \frac{2 \times .4 \times 40 \times .9 \times 40}{9} + 39 = 167^K$ ✓

#4 @ 1'-0" ⇒ $V_u = \frac{2 \times .4 \times 40 \times .9 \times 40}{12} + 39 = 135^K$ ✓

V_u @ Abut. $= (23.3 + 6.5)1.3 + 1.3 \times 5/3 \times 49.9 = 147^K$
⇒ #4 @ 9"

V_u @ .1 $= (17.3 + 4.8)1.3 + 1.3 \times 5/3 \times 42.4 = 121^K$ ✓
→ #4 @ 1'-0"

V_u @ Pier $= (39.2 + 10.9)1.3 + 1.3 \times 5/3 \times 55.1 = 185^K$ ✓
⇒ #4 @ 6"

V_u @ .9 $= (33.2 + 9.2)1.3 + 1.3 \times 5/3 \times 50.3 = 164^K$ ✓
⇒ #4 @ 9"

V_u @ .8 $= (27.2 + 7.4)1.3 + 1.3 \times 5/3 \times 44.8 = 142^K$ ✓
→ #4 @ 9"

V_u @ .7 $= (21.2 + 5.7)1.3 + 1.3 \times 5/3 \times 38.7 = 119^K$ ✓
⇒ #4 @ 1'-0"

Anchor used for Design - Prescon Corporation

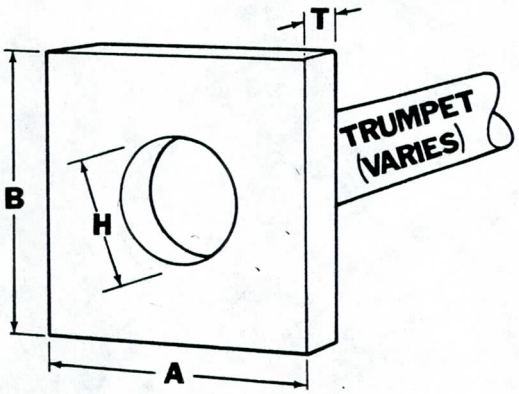

Bearing Plate Assembly

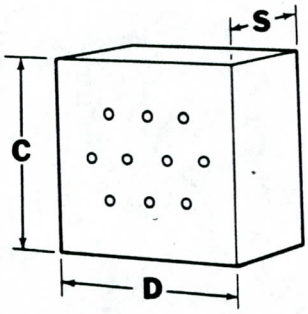

Tapered Hole Anchor Block

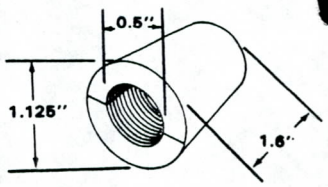

Wedges

STRAND TENDON SIZE CHART

Tendon Size No. - Dia.	Concrete Strength f'c (psi)	Bearing Plate Assembly				Tapered Hole Anchor Block			Effective Force (Kips) 0.60 f's
		A	B	H	T	C	D	S	
12 — ½"	3000	12"	12"	5¾"	1¼"	8"	8"	2½"	298
26 — ½"	3000	16½"	16½"	7¼	1½"	11"	11"	4"	645

Note: All dimensions are inches.
Other tendon sizes available on request.

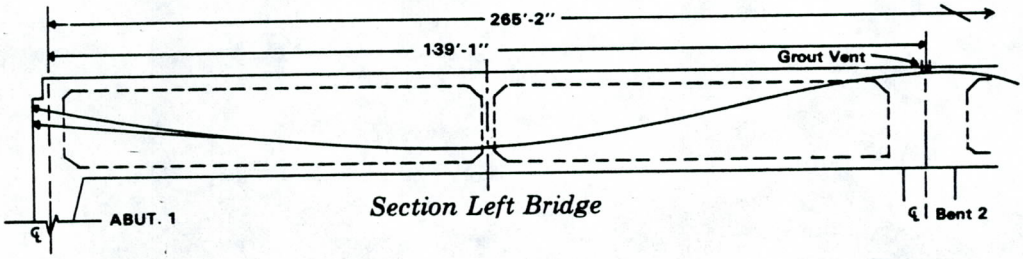

Section Left Bridge

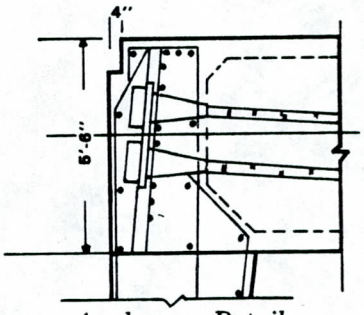

Anchorage Detail

ANCHORAGE FABRICATION

Anchorages for wire tendons are composed of three basic components:

1. Bearing plate assembly
2. Stressing washer
3. Shims

Anchorages for strand tendons are composed of three basic components:

1. Bearing plate assembly
2. Tapered hole anchor block
3. Wedges

The above components are fabricated at a Prescon plant under a rigid quality assurance program, with the latest automatic equipment, and subject to rigorous inspection by the design agency.

Bearing plate assemblies distribute the prestress force to the concrete, and vary in size according to concrete strength and tendon force (see Tendon Size Charts on page 9).

Stressing washers are fabricated from various steels as required, machined to length and then threaded internally or externally. They are drilled to receive individual wires with 30 or more holes formed simultaneously. Precise control of fabrication procedures is required to insure adequate behavior in bearing of the button headed wire and proper transfer of force to the bearing plate assembly. Tapered hole anchor blocks are cut from steel plate of the appropriate thickness. Tapered holes to receive each strand and pair of wedges are accurately machined in the block to insure proper anchoring of the strand tendon.

Provision is made in wire and strand systems for introduction of grout materials for final bonding of tendons after stressing operation is complete.

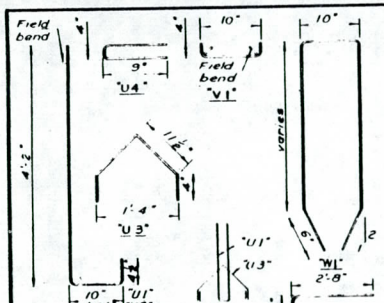

BAR BENDING DETAILS

NOTE: Location of ties and hoops in end block may be varied slightly to accommodate prestress strands.
X-beams are to be poured a minimum of 3 days before deck pour.

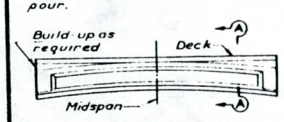

BUILD-UP DECK DETAILS

Beam soffits shall be on level grade prior to prestressing. Difference between deck elev. and camber in beams shall be compensated for by build up over beams.

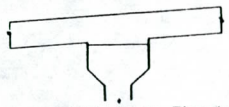

Minimum deck thickness. This dimension assumes that the beam fabrication and erection will meet the required deck elevs. In case of variations, lower beam to meet corrected elevs.

SECTION "A-A"

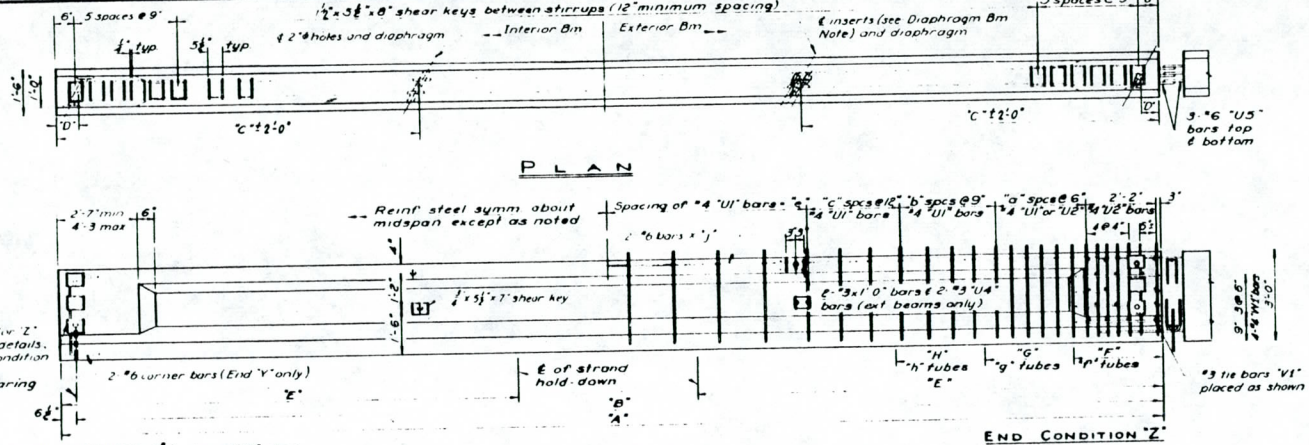

For End "Y" or "Z" shear key details, see End Condition "Z" below

℄ Bearing

BEARING DETAIL, PINNED END: 1 1/2" dia. x 1'-0" deep hole in beam for 1 1/2" ϕ smooth dowel (A 36)

EXPANSION END: No hole in beam. See bent details of expansion bearing

END CONDITION "Y"

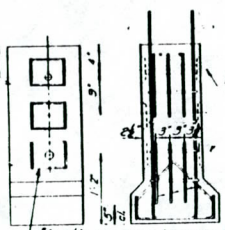

END CONDITION "Z"

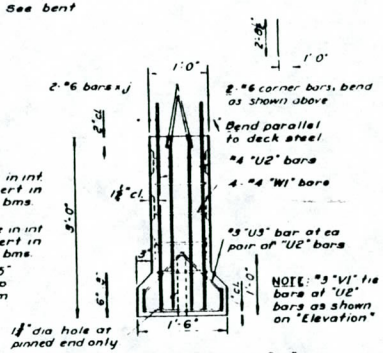

NOTE: #3 "V1" tie bars at "U2" bars as shown on "Elevation"

END CONDITION "Y"

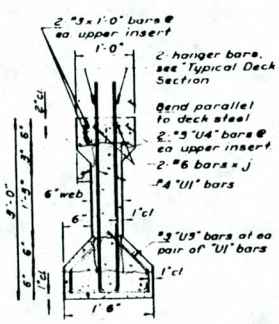

MID-SPAN SECTION

TYPICAL MILD STEEL ARRANGEMENT

NOTE: These sections for dimensions only. See Figures 1 to 4 for actual strand arrangements to be used

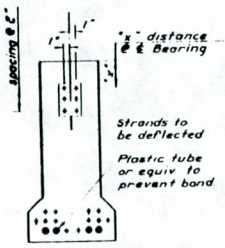

END BLOCK

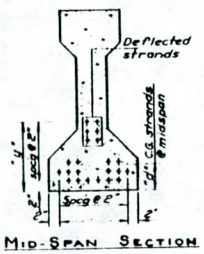

MID-SPAN SECTION

TYPICAL STRAND ARRANGEMENT

GENERAL NOTES

SPECIFICATIONS
Design for HS20-44 live loading according to O.S.H.D. Bridge Design and Construction Specifications.

PRECAST PRESTRESSED CONCRETE
All concrete shall be class 5000-1" to 6000-1" shown in table below as (Concrete strength at 28 days). Concrete strength at prestress release varies and is shown in table below as (Concrete strength at transfer)

PRETENSIONING STEEL
All strands shall be 1/2" dia. 7-wire strands with a minimum ultimate strength of 41,300 lbs. (ASTM A416 Grade 270). Straight strands shall be tensioned initially to 28,910 lbs. unless shown otherwise in the table below. Deflected strands shall have the same tension after deflecting.

MILD STEEL REINFORCEMENT
All reinforcing steel shall conform to ASTM Spec. A615 Grade 60 (fs=24,000 psi). The following splice lengths shall be used (unless shown otherwise):

Bar Size	Splice Length	Bar Size	Splice Length
3	1'-0	8	3'-7"
4	1'-4"	9	4'-7"
5	1'-8"	10	5'-9"
6	2'-0"	11	7'-1"
7	2'-9"	14 & 18	Not Permitted

All bars shall be placed 2" clear of the nearest face of concrete (unless shown otherwise).

DIAPHRAGM BEAMS
For beams with total length (dim. "A") equal to or less than 60'-0" use one diaphragm at midspan. For beams with a total length greater than 60'-0" use two diaphragms as shown. See dimension "C" in table below. Place 3 Structural Conc. Insets: Richmond EC-2 or Dayton Sure-Grip F-56 (or F-57) or approved equal, in exterior beams only at each diaphragm. Provide 1/2" dia. x 2'-3" rod (A 36) threaded full length or 1/2" dia. x 2'-3" coil rod (yield & ultimate equal to A36, elongation min. 10%) to fit into each insert. Brace prestressed beams to prevent lateral deflection during diaphragm pour.

DIMENSIONS
Dimensions shown in table below are horizontal dimensions. Finished length of beam, ℄ bearing to end of beam (dimension "A") shall be corrected for variation due to grade. Allowance shall be made by fabricator for elastic shortening, creep and shrinkage (dimension "Z").

BEAM END: The designations Bk and Ahd refer to back and ahead on station.

HANDLING PRESTRESSED CONCRETE BEAMS: The beams shall be maintained in an upright position at all times. They shall be lifted by means of lifting bars securely anchored in the end block as approved by the engineer.

BEAMS	NUMBER OF BEAMS REQD	LOCATION	SPAN LENGTH CENTER TO CENTER OF BENTS ALONG ℄ BEAM	TOTAL STRANDS PER BEAM	SEE FIGURE	INITIAL TENSION PER STRAND IN KIPS	CONCRETE STRENGTH AT TRANSFER (KSI)	CONCRETE STRENGTH IN 28 DAYS (KSI)	VARIABLE DIMENSIONS "A"	"B"	"J"	BM END	END CONDITION	"C" ± 2'-0"	"D"	"E"	"F"	"G"	"H"	"a"	"b"	"c"	"e"	"f"	"g"	"h"	WEIGHT OF BEAMS IN KIPS	ESTIMATED DEFLECTION AT MIDSPAN: UPWARD DEFLECT. DUE TO PRESTRESSING AT TRANSFER	DOWNWARD DEFLECT. DUE TO DECK DEAD LOAD	UPWARD DEFLECTION DUE TO PRESTRESS AFTER 3 MO. AFT. TRANS.	"Z" DIM. SHORTENING TWO WEEKS AFTER TRANSFER
												BK																			
												AHD																			
												BK																			
												AHD																			
												BK																			
												AHD																			
												BK																			
												AHD																			
												BK																			
												AHD																			

FIGURE	1		2		3		4	
	BK	AHD	BK	AHD	BK	AHD	BK	AHD
TOTAL STRANDS								
"a" DISTANCE								
"b" DISTANCE								
END OF BEAM	BK	AHD	BK	AHD	BK	AHD	BK	AHD
STR DEFLECTED								
"X" DISTANCE								

NOTE: Tube ϕ strands are symmetrical about Bm. ℄'s as shown.

DATE	REVISION
4-5-72	Diaph. inserts from 1 to 2 ea.

APPROVED:
BRIDGE ENGINEER
DESIGNED
DRAWN
CHECKED
CALC. BOOK

OREGON STATE HIGHWAY DIVISION
BRIDGE DEPARTMENT

TYPE II CONTINUOUS PRESTRESSED CONCRETE BEAMS

DATE
SHEET OF
BRIDGE NO
DRAWING NO

10-3-79 Reinf. Note Revised 9-30-75 Revised Insert note. 2-14-75 Rev. Diaphragm note 12-2-74 Rev. Reinf. note 8-19-69 Pretensioning steel ASTM 6-12-69 Diaph. Bm. note 9-16-68 Rebar spec. 6-19-70 End Bm. FILE No 23948

5-96

28

DMJM	PROJECT: 29th Ave.	PROJECT NO:		PAGE 29
		BY: GLS	DATE: 2/14/85	
SUBJECT: Cost comparison between Pretension & Post Tension Girder		BAS	1-2-86	

Girder length = 55.92'

Pretension

cost = $65/ft ≈ $3500 ea.

Quantities / Girder		Unit price	cost
concrete =	5.31 cu. yds	400.00	2124.00
reinf =	738 #	.45	332.10
prestressing steel =	479 #	2.00	958.00
			$ 3414.0 ✓
			say $3500

Post Tension Quantities / Girder

concrete =	5.75 cu. yds	* 440	2530.00
reinf =	1821 #	.45	819.45
Prestressing steel =	447.5 #	2.00	895.00
			$ 4244.45 ✓
			say $4300

* since shoring is req'd on Post Tension alternate add 10% to unit price of concrete

DMJM	PROJECT	PROJECT NO: 4252-01-05	PAGE 29A
		BY: CRK / DATE: 2-13-85	
SUBJECT QUANTITIES - GIRDER CONCRETE		BAS 1-2-86 (~~[illegible]~~ 15.51 x 50)	

GIRDER

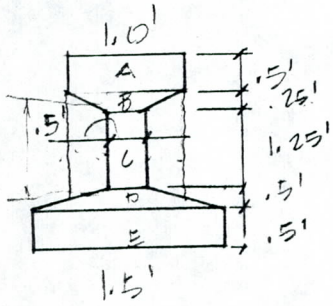

AREAS

A = 1' x .5' = .5 FT.^{2}

B = .25(1' + .5')/2 = .18750 FT.^{2}

C = 1.25 x .5 = .625 FT.^{2}

D = .5(1.5 + .5)/2 = .5 FT.^{2}

E = 1.5 x .5 = .75 FT.^{2}

2.51625 FT.^{2}

x 55.92 LENGTH

143.29 FT.^{3}/27

= 5.31 YD.^{3}

x 16 GIRDERS

~~BT~~ ⇒ 84.91 YD^3

REINFORCING STEEL BAR LIST .521 #/FT. 29B

GIRDER STRUTS - PRESTRESSED

#4	#5	#6	#7	#8	#9	#10	#11
0.668	1.043	1.502	2.044	2.670	3.400	4.303	5.313

MARK	Size		No. of Bars	Type	Total Weight	Comments
	Bar No.	Length				
		55.92	4		116.54	STRAIGHT
		59.92	6		187.31	STRAIGHT EXTENDED
		56.12	6		175.43	BENT
				/	479.28	LBS PER GIRD. SPAN
					x16	W/2 SPANS & SIDEWALKS
				/	7668.5	=> 7,669 LBS

By: CRK Date 2-13-85	Job No. 4252-01-05	Sheet 1 of 3
Chk'd: BAS Date 1-2-86	Structure No.	

REINFORCING STEEL BAR LIST

GIRDER 2 & 4 - DETAILS.

#4	#5	#6	#7	#8	#9	#10	#11
0.668	1.043	1.502	2.044	2.670	3.400	4.303	5.313

MARK	Size		No. of Bars	Type	Total Weight	Comments
	Bar No.	Length				
	4	4.75'	77	3'-6" 4" 9"	244.32	STIRRUPS
	4	4.75'	77	4" 3'-6" 9"	244.32	
	4	2.58'	77	1'-6" 1'-6" 4" 4"	132.70	
	5	55.83'	2		116.46	STRAIGHT BARS
				✓	737.80	LBS. PER GIRD. SPAN
					16	W/ 2 spans & 8 GIRDERS
				✓ Σ:	11,804.8	⇒ 11,805 LBS.

By: CRK	Date 2-13-85	Job No.	Sheet 2 of 3
Chk'd: BAS	Date 1-2-86	Structure No.	

REINFORCING STEEL BAR LIST

29D

GIRDER DECK - POST TENSIONED

#4	#5	#6	#7	#8	#9	#10	#11
0.668	1.043	1.502	2.044	2.670	3.400	4.303	5.313

MARK	Size: Bar No.	Size: Length	No. of Bars	Type	Total Weight	Comments
@ D.W.	4	7'-7"	20	4½ 3'-3" 4"	101.27	
	4	3'-2"	40	3'-2"	84.7	
	4	4'-2"	20	4" 1'-4"	55.71	
	4	7'-7"	48		243.05	
@ MID-SPAN	4	3'-3"	48	9"	104.21	
	4	4'-2"	48		133.71	
	4	2'-5"	4		6.47	GRIDLINE
@ ABUTS.	4	1'-0"	8 32		21.38	
	8	57-7"	2		307.48	top CONT. (IN STRIP)
	8	57-7"	4		614.95	BOTT. CONT. (IN STRIP)
	4	55'-5"	4		148.08	CONT. (IN STRIP)
				TOT. ✓	1821.01	2 SPANS & 8 (2 LINES)
					× 16	
					✓ 29,136.16 ⇒	29,136 LBS

By: CRK Date 2-13-85	Job No. 4252-01-05	Sheet of
Chk'd: BAS Date 1-2-86	Structure No.	

490 #/FT.3

REINFORCING STEEL BAR LIST

Anchor Bolts 4.03 LBS per Bolt
.915 LBS/Lin. Ft. on END Nelson STUDS

29E

GIRDER BEARING DETAIL - PRETTY.

#4	#5	#6	#7	#8	#9	#10	#11
0.668	1.043	1.502	2.044	2.670	3.400	4.303	5.313

MARK	Size		No. of Bars	Type	Total Weight	Comments
	Bar No.	Length				
				1'-4"		
			1632	1" x 3/4"	1303.36	END PL.
				A709		
			32	T T	117.12	END NELSON STUDS ANCHORS
				2'-4"		
			4	9" x 3/4"	214.08	SOLE PL.
				A709		
		1"Ø x 1'-4"	8		32.16	ANCHOR BOLTS & NUTS
				✓	1666.72	LBS

By: CRK Date 2-13-85	Job No.	Sheet 3 of 3
Chk'd: BAS Date 1-2-86	Structure No.	

✓ GIS

DMJM	PROJECT	PROJECT NO:	PAGE
		BY: KH / DATE: 2-12-85	29F
SUBJECT		BAS 1-2-86	

END BLKS OF GIRDER

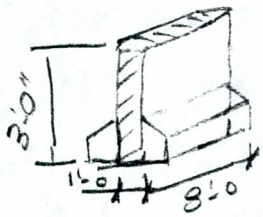

L = 8.0'
W = 1.0'
H = 3.0'

$8 \times 1 \times 3 = \frac{24}{27} =$

✓ .89 CU YDS

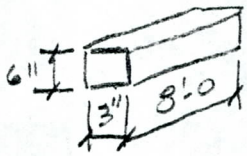

L = 8.0'
W = .25'
H = .5'

$8.0 \times .25 \times .5 =$

$\frac{1}{27} = .04 \times 2 =$

✓ .07 CU YDS

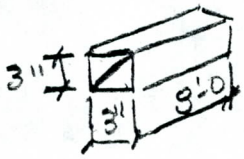

L = 8.0'
W = .25'
H = .25

$8.0' \times .25 \times .25 =$

$\frac{.05}{27} =$

✓ .02 CU. YDS.

$.89 + .07 + .02 = .98 \times$

✓ 2 = 1.98 CU YDS

CENTER SECTION OF GIRDER

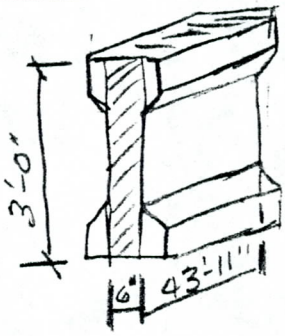

L = 39.9167'
W = .5'
H = 3.0'

$39.9167 \times .5 \times 3.0' = \frac{59.88}{27}$

✓ 2.22 CU. YDS

BOT.

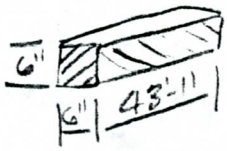

$39.9167' \times .5 \times .5 =$

$\frac{9.98}{27} = .37 \times 2 =$

✓ .74 CU. YDS.

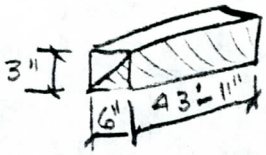

$39.9167 \times .5 \times .5 = \frac{9.98}{27}$

✓ .37 CU. YD.

5.75 ✓ G15

DMJM	PROJECT	PROJECT NO:		PAGE
		BY: KH	DATE: 2-12-85	29G
SUBJECT		BAS 1-2-86		

TOP

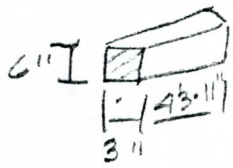

39.9167 x .25 x .5 = $\frac{4.99}{27}$

✓ .18 x 2 = .37 CU. YDS.

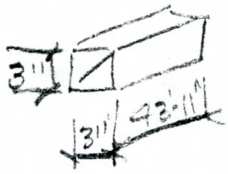

39.9167 x .25 x .25 = $\frac{2.99}{27}$ =

✓ .09 CU. YDS.

2.22 + .74 + .37 + .37 + .09 =

✓ CTR. 3.79 CU YDS.
END BLKS 1.98 CU YDS.
✓ 5.75 CU. YDS.

DMJM	PROJECT: 29th Ave	PROJECT NO:	PAGE 30
		BY: GIS	DATE: 2/2/85
SUBJECT: Pier Design		BAS	1-2-86

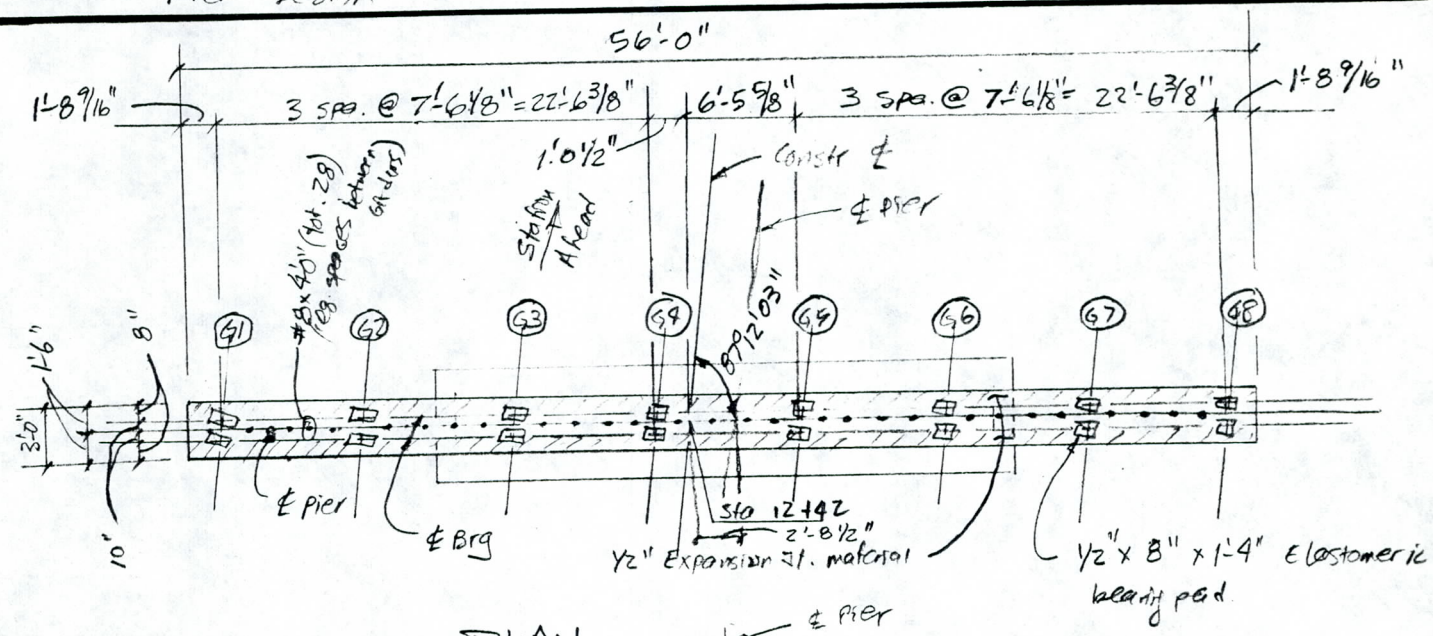

PLAN

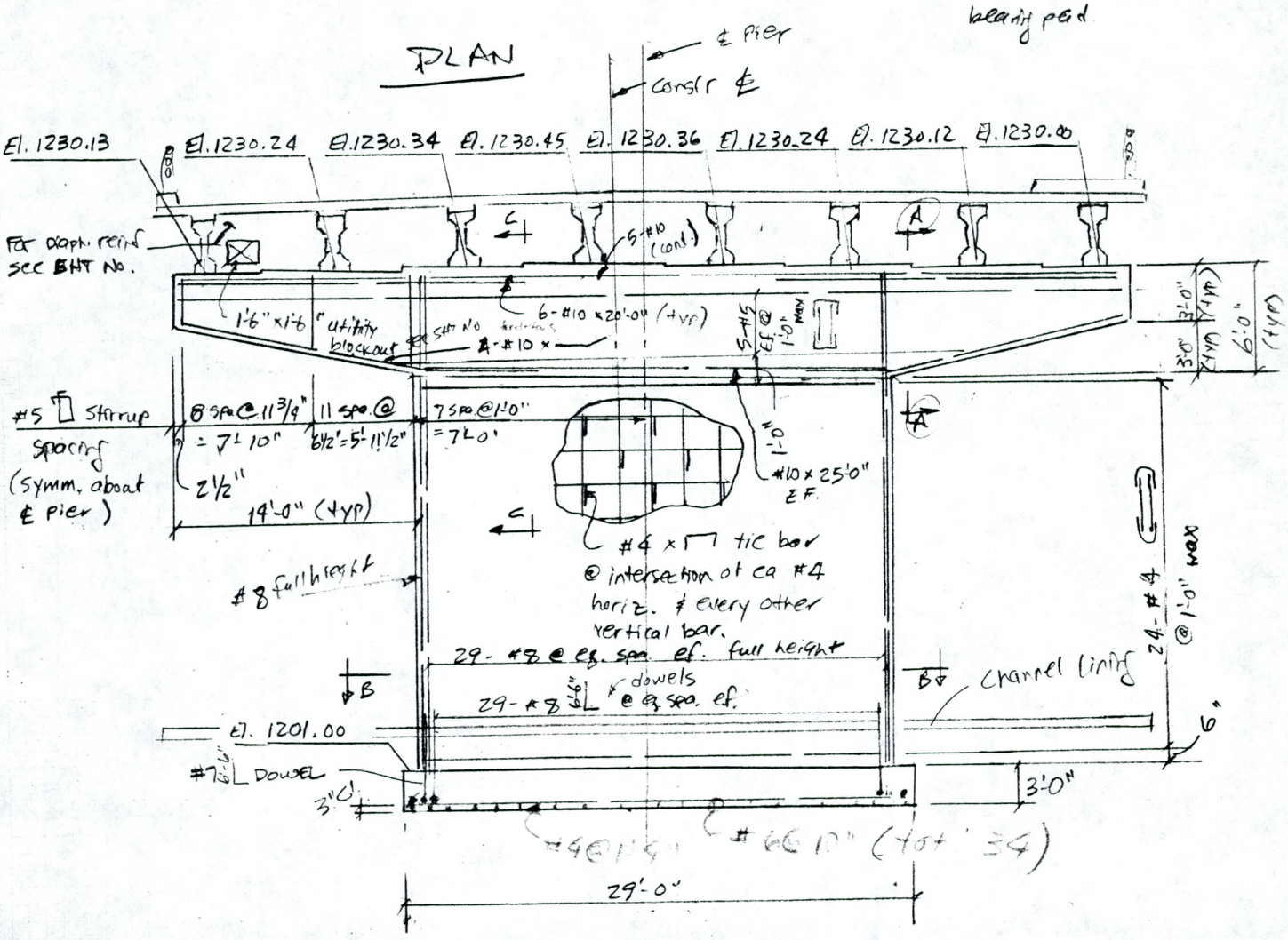

ELEVATION

DMJM	PROJECT: 29th Ave	PROJECT NO:		PAGE 30A
		BY: GIS	DATE: 2/5/85	
SUBJECT: Pier Design		BAS	1-2-86	

Girder Bearing Elevations

Structure Depth = 7¼ + 1 + 36 + ½ = 44.75"
(Slab, Haunch, Girder, Bearing)

Girder	Station	offset	Elev.
1	12+40.9822	-23.5417	30.13
2	12+41.3064	-16.0417	30.24
3	12+41.6307	-8.5417	30.34
4	12+41.9550	-1.0417'	30.45
5	12+42.2792	6.4583	30.36
6	12+42.6035	13.9583	30.24
7	12+42.9278	21.4583	30.12
8	12+43.2520	28.9583	30.00

Distance from ℄ structure to constr ℄ along ℄ pier

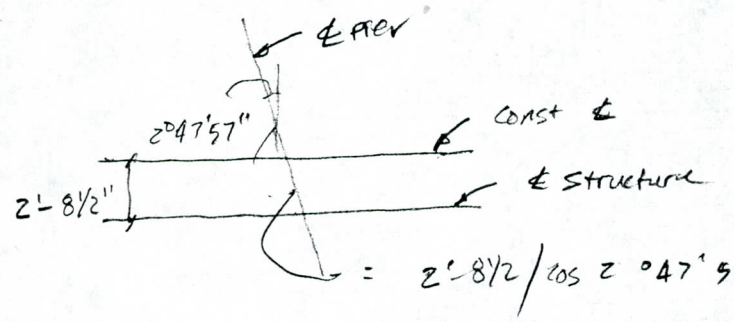

= 2'-8½ / cos 2°47'57" = 2.7116'

DMJM	PROJECT: 29th Ave	PROJECT NO:		PAGE
		BY: GLS	DATE: 2/5/85	31
SUBJECT: Pier Design		BAS	1/2/86	

Pier Cap Design

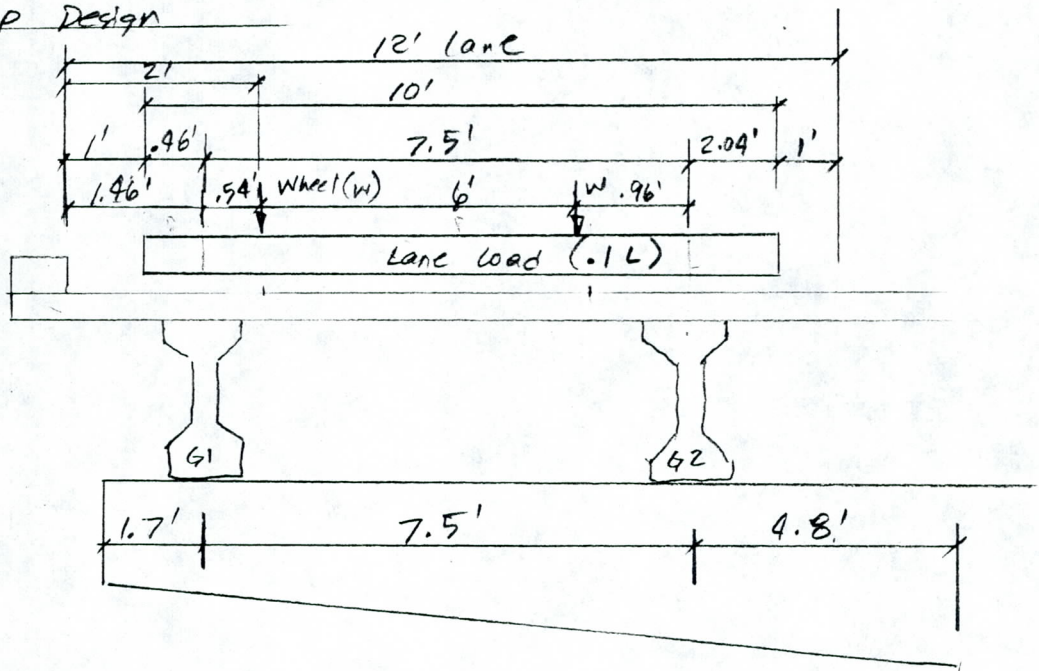

face of wall

Reactions (see Bearing Design)

DL_{NC} (G1) = 28.47 × 2 = 56.94 K

DL_{NC} (G2) = 31.20 × 2 = 62.40 K

DL_C = 10.91 K

Live Load:

G1: DF (lane) = [(.1)(7.5)(7.5/2) + (.1)(.46)(7.73) − (.1)(2.04)(2.04/2)] ÷ 7.5 = .395L

DF (truck) = [.96 + 6.96] ÷ 7.5 = 1.056 ⇒ .528 lanes

⇒ Reaction = .528 × 70.6 = 37.28 K

G2: DF (lane) = [(.1)(7.5)(7.5/2) − (.1)(.46)(.46/2) + (.1)(2.04)(8.52)] ÷ 7.5 = .605L

DF (truck) = 1 − .528 = .472

use truck reaction ⇒ Reaction = .472 × 70.6 = 33.32 K

Total G1 = 105.13 K

Total G2 = 106.63 K

Pier Cap Design (cont.)

Moment Design (cont)

10% of flexure steel in tension area ⇒ $1.27 \times 11 \times .1 = 1.397\ in^2$

⇒ 10-#5 ($A_s = 3.12$) OK/

Develope #10 past face

$\ell_d = 55.6''$ top bar $= 1.4 \times 55.6 = 77.84'' = 6.49'$ ✓

length req'd $= (14 - 3/12 + 6.49)\ 1805/1820 = 20.16'$ say $20'$ ✓

Shear Design

Shear @ d from support (include reaction from G2)

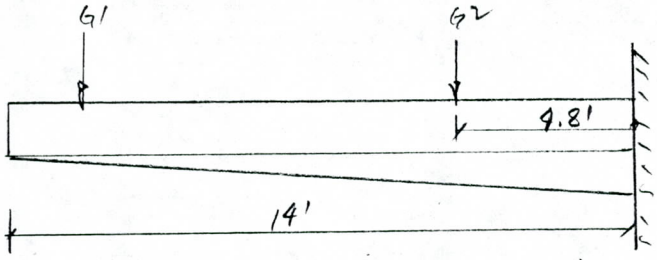

Cap load @ free end $= (3)(3)(.15) = 1.35$ k/ft ✓

@ fixed end $= (6)(3)(.15)$ 2.7 k/ft ✓

Assume $d = 60''$

$V = \overset{G1}{105.13} + \overset{G2}{106.63} + \underset{12.15}{(1.35)(14-5)} + \underset{3.91}{(1/2)(1.35)(14)\left(\frac{(14-5)^2}{14^2}\right)} = 227.82^k$ ✓

$v = 227820/36/60 = 105$ psi ← ✓

Shear beyond G2 $= 227.82 - 106.63 = 121.19^k$ ✓

$v = 121190/36/54 = 62$ psi ✓

Shear @ G1 $= 105.13 + (1.35)(1.7) + (1.35)(1/2)(14)\left(\frac{1.7^2}{14^2}\right) = 107.6^k$ ✓

$v = 107600/36/36 = 83$ psi ← ✓

Design shear reinforcing from G1 to G2 for 83 psi

and from G2 to face of support for 105 psi

DMJM	PROJECT: 29th Ave	PROJECT NO:		PAGE
		BY: GLS	DATE: 2/5/85	32A
SUBJECT: Pier Design		BAS	1-2-86	

Pier Cap Design (cont.)

Moment Design

Maximum Moment @ face of wall = 105.13 × 12.3 + 106.63 × 4.8 = 1805 k-ft

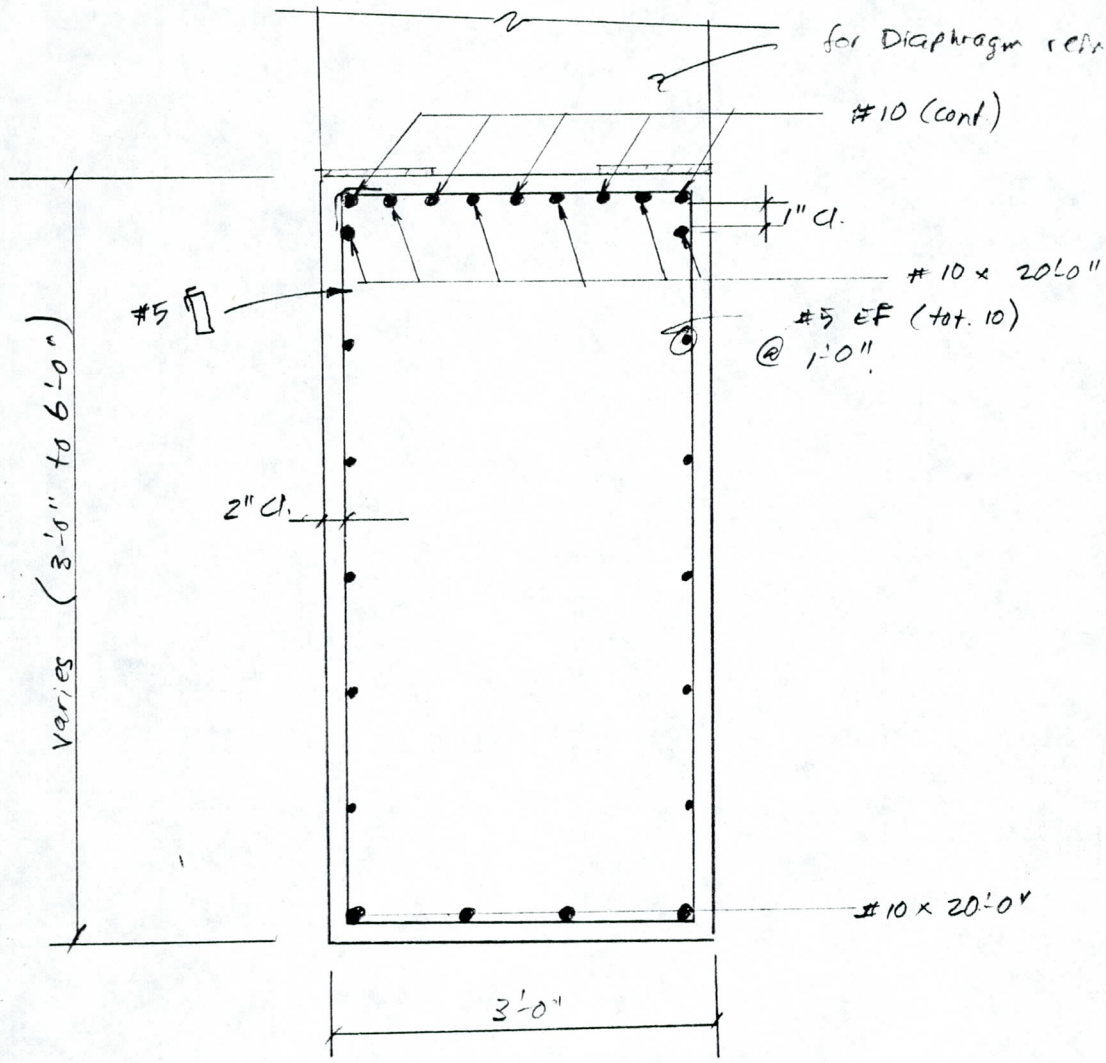

SECTION A

From personal program: $f_c = 1200$ psi $f_s = 24000$ psi $n = 9$

Including all steel shown and performing a stress-strain compatibility

Assuming #5 bars in face spaced 1'-0" down from #10 EF.

$M_{cap} = 1820^{k\text{-}ft} > 1805$ OK

DMJM	PROJECT: 29th Ave	PROJECT NO:		PAGE
		BY: GIS	DATE: 2/5/85	33
SUBJECT: Pier Design		BAS	1/2/86	

Pier Cap Design (cont)

Shear Design (cont.)

#5 stirrups

$v_c = .95\sqrt{3000} = 52$ psi

G2 to face of wall:

$$s = \frac{(.62)(20000)}{(36)(105-52)} = 6.5''$$

G1 to G2

$$s = \frac{(.62)(20000)}{36(83-52)} = 11.11''$$

$$s_{min} = \frac{(.62)(40000)}{36 \times 50} = 13.78''$$

DMJM	PROJECT: 29th Ave	PROJECT NO:		PAGE
		BY: GIS	DATE: 2/6/85	34
SUBJECT: Pier Design		BAS	1/2/86	

Wall Design

Loads -

Ignor loads in the transverse direction because wall is very stiff in that direction

Dead loads (DL)

Total reaction from Girders = $56.94 \times 2 + 62.40 \times 6 + 10.91 \times 8 = 575.56^{k}$ ✓

Pier weight = $\left[\left\{\left[(3+6)/2\right]14 \times 2 + (28)(6)\right\}3 + (2.0)(23)(28)\right].15 = 325.5^{k}$ ✓

901.06^{k} ✓

Live loads (LL)

Case I (2 lanes) maximum reaction = $70.6 \times 2 = 141.2^{k}$ ✓

→ Case II (3 lanes) " " = $70.6 \times 3 \times .9 = 190.62^{k}$ ✓

→ Case III (4 lanes) " " = $70.6 \times 4 \times .75 = 211.80^{k}$ ✓

should control

Sidewalk live load (SLL)

$(.06)(5.4167) \times 5/8 \times 55.75 = 11.32^{k}$ ✓

Wind loads (W)

From the superstructure = $(.012)(3 \times 58 + 114.08 \times .02152 \times 58)$

$= 3.80^{k}$ ✓

on substructure = $(.04)(23 \times 28 + (3+6)/2 \times 14 \times 2 + 28 \times 6)$

$= 37.52^{k}$ ✓ (CG located 16.25' from top of footing)

Wind load on live load (WL)

$(.04)(50) = 2^{k}$ ✓

Stream Flow Force (SF)

$P = (.67)(14)^2 = 131.32\ \#/ft^2 \times 19 \times 2 = 4.99^{k}$ ✓

DMJM	PROJECT: 29th Ave	PROJECT NO:		PAGE
		BY: GIS	DATE: 2/6/85	35
SUBJECT: Pier Design		BAS 1/2/86		

Wall Design (cont.)

Loads (cont.)

Earthquake (EQ)

At top of pier from super structure = (.09)(1.0)(575.56) = ~~34.53~~ 51.80 K

At CG of pier = (.09)(1.0)(325.5) = 29.30 K

Longitudinal live load (LF)

Case I = .05 × 141.2 = 7.06 K

Case II = .05 × 190.62 = 9.53 K

Case III = .05 × 211.80 = 10.59 K

Wall Design (cont.)

Reactions @ Top of Footing – Design Pier Height = 1230.24 - 1201 = 29.24'

Group I

LL Case II :

$P = 901.06 + 190.62 + 11.32 = 1103^{K}$

$M = 0$

LL Case III

$P = 901.06 + 211.80 + 11.32 = 1124.18^{K}$

Group II (125% overstress)

$P = 901.06 / 1.25 = 720.85^{K}$

$M = [(3.80)(29.24) + (37.52)(16.25)] \div 1.25 = 576.65$ K-ft

Group III (125% overstress)

LL Case II :

$P = (901.06 + 190.62 + 11.32) \div 1.25 = 882.4^{K}$

$M = (3.80 \times .3)(29.24) + (37.52 \times .3)(16.25) + (2)(29.24) + 9.53 \times 29.24$

$= 553.38$ K-ft

LL Case III :

$P = 1124.18 / 1.25 = 899.3^{K}$

$M = 3.80 \times .3 \times 29.24 + 37.52 \times .3 \times 16.25 + 2 \times 29.24 + 10.59 \times 29.24$

$= 584.37$ K-ft

Group VII (133% overstress)

$P = 901.06 \div 1.33 = 677.5^{K}$

$M = (34.53 \times 29.24 + 29.30 \times 16.25) \div 1.33 = 1117.1$ K-ft

Wall Design (cont.)

By inspection, investigate: Group I Case III

Group III Case III

Group VII

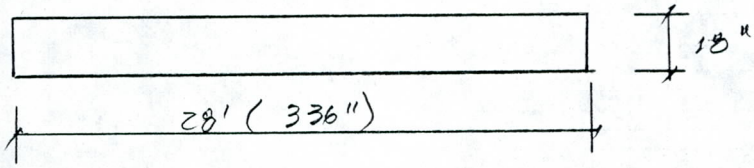

$f_c' = 3000$ psi

Slenderness effects — assume pinned @ top, $l_u = 29.24 - 3^{cap} = 26.24'$

Group I Case III maximum

$$EI = \frac{3122 \times (1/12)(336)(24)^3}{2.5} = 483375514$$

$$P_c = \frac{\pi^2 \times 483375514}{(.8 \times 26.24 \times 12)^2} = 75182$$

$$\delta = \frac{1}{1 - \frac{2.5 \times 1075.88}{75182}} = 1.0371$$

DMJM	PROJECT: 29th Ave	PROJECT NO:		PAGE 38
		BY: GIS	DATE: 2/6/85	
SUBJECT: Pier Design		BAS	1/2/86	

Wall Design

% steel (ρ_t) ⇒ $24 \times 336 \times .01 = 80.64\ in^2$ ⇒ $40.32\ in^2$ each face ✓

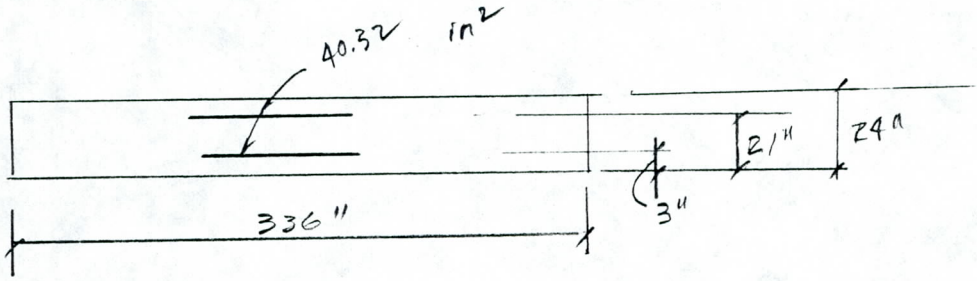

Load	P	M x δ	e
Group I Cox III	1124.18	0	
Group III Cox III	899.3	584.37 x 1.0371 = 606.05	.6739' ✓
Group VII	677.5	1117.1 x 1.0371 = 1158.5	1.71' ✓

Reduce Group VII P by 25% (Maximum moment minimum axial load)

⇒ P = 508.1 ✓ ; e = 2.28' = 27.4" ✓

DMJM	PROJECT: 29th Ave	PROJECT NO:		PAGE
		BY: GIS	DATE: 2/6/85	39
SUBJECT: Pier Design		BAS	1/2/86	

Wall Design

Capacity:

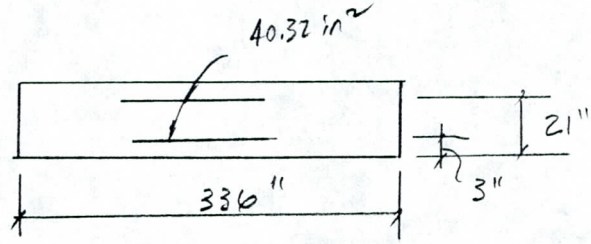

Balanced Conditions

$$c_b = \frac{87}{87+60} \times 21 = 12.43''$$

$$f_{s\,bal} = \frac{12.43-3}{12.43} \times 87 = 66 \Rightarrow 60 \text{ ksi}$$

$$P_{bal} = .85 \times 3 \times 336 \times .85 \times 12.43 + 60 \times 40.32 - 60 \times 40.32 = 9053^{k}$$

$$M_{bal} = .85 \times 3 \times 336 \times .85 \times 12.43 (24/2 - .85 \times 12.43/2)$$
$$+ (60)(40.32)(24/2 - 3) + (60)(40.32)(9) = 104354 \text{ k-in}$$

$$e_b = 104354 / 9053 = 11.527''$$

Note: $.35 \times 9053 = 3169^{k} > 899.3^{k}$ (Group III Case III)

Therefore need only consider Group VII loading

At $e = 27.4''$

by trial & error solution $c = 4.7609'' \rightarrow f_s' = \frac{4.7609-3}{4.7609} \times 87$

$= 32.18$ ksi (Assumption correct)

$$P_n = .85 \times 3 \times 336 \times .85 \times 4.7609 + 32.18 \times 40.32 - 60 \times 40.32$$

$$\doteq 2346 \times .35 = 821^{k} > 508.1^{k}$$

Use an effective smaller area of concrete

Put 1% steel in the smaller effective area

spread steel thru wall

Wall Design (cont)

Reduced effective area: $.01 \times 24 \times 200 = 48 \text{ in}^2 \Rightarrow 24 \text{ in}^2$ EF

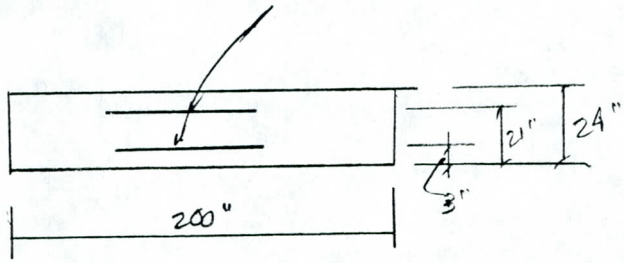

Balanced conditions:

$c_b = 12.43''$ $f_s' \text{ bal} = 60 \text{ ksi}$

$P_{bal} = .85 \times 3 \times 200 \times .85 \times 12.43 + 60 \times 40.32 - 60 \times 40.32 = 5388^k$

$M_{bal} = .85 \times 3 \times 200 \times .85 \times 12.43 (24/2 - .85 \times 12.43/2)$
$+ (60)(24)(24/2 - 3) + (60)(24)(9) = 62115 \text{ k-in}$

$e_b = 11.53''$

$.35 \times 5388 = 1886^k > 1124.18^k$ OK

At $e = 27.4''$

by trial & error $c = 4.9289''$ $f_s' = 34.05 \text{ ksi}$

$P_n = .85 \times 3 \times 200 \times .85 \times 4.9289 + 34.05 \times 24 - 60 \times 24$

$= 1514^k \times .35 = 529.9^k > 508.1^k$ OK

use 24 in^2 of steel EF

$\Rightarrow$ 30 - #8

DMJM	PROJECT 29th Ave.	PROJECT NO:		PAGE
		BY: HTS	DATE: 2/11/85	41
SUBJECT Peir design		BAS	1/2/86	

Footing design :-

assume a 3' thick, 6' wide, 29' long continous footing

Dead load (DL)

Reaction from Girders = 575.56^K see Wall design

Peir wt. = 325.5^K

footing DL = 3'x6' x 29 x 0.15 K/ft^3 = 78.3^K

total DL = 575.56 + 325.5 + 78.3 = 979.36^K

Live Load (LL)

Case I (2 lanes) max. reaction = 141.2^K see Pier design

Case II (3 lanes) " " = 190.62^K " " "

Case III (4 lanes) " " = 211.80 " " "

Sidewalk Live load

(SLL) = 11.32^K

Wind loads (W)

From the superstructure = 30.80^K

on substructure = 37.52^K (C.G located @ 19.25') from bottom of footing

Wind Loads on live load (WL)

WL = 2^K

Earthquake EQ.

@ top of pier from superstructure = ~~34.53~~^{K} 51.80

@ c.G. of pier = 29.30^K

DMJM	PROJECT 29th Ave.	PROJECT NO:		PAGE 42
		BY: HTS	DATE: 2/11/85	
SUBJECT Peir design		BAS 1/2/86		

Longitudinal live load (LF)

Case I = 7.06 K

Case II = 9.53 K

Case III = 10.59 K

wt. of water above footing

max. water level = 1223.1' elevation

water height above footing = 1223.1' - 1201.0 = 22.1'

wt. of water on one side of footing = 29' x 2' x 22.1' x $\frac{62.4}{1000}$ = 79.98 K

DMJM	PROJECT 29th Ave	PROJECT NO:		PAGE 43
		BY: HTS	DATE: 2/1/85	
SUBJECT Peir design		BAS	1/2/86	

evaluate force and over turning moments for load groups:-

note = height from top of peir cap to bottom of footing =
1230.24' − 1201.0' + 3' = 32.24'

Group I

LL case II

a. w/o water

P = D+L+ sidewalk LL

= 979.36 + 190.62 + 11.32 = 1181.3 k

b. with water

P = 1181.3 + 2x 79.98 = 1341.26 k

M = 0

LL case III

a. w/o water

P = 979.36 + 211.80 + 11.32 = 1202.48 k

b. w/ water

P = 1202.48 + 2x 79.98 = 1362.44 k

M = 0

Group II (allow for 125% overstress)

a. w/o water

P = 979.36 / 1.25 = 783.5 k

b. w/ water

P = (979.36 + 2x79.98) / 1.25 = 911.46 k

M = [(3.80)(32.24) + (37.52)(19.25)] / 1.25 = 675.82 k

Group III (125% overstress)

LL Case II :-

a. No water

$P = (979.36 + 190.62 + 11.32)/1.25 = 945.04$ K

b. with water

$P = 945.04 + (2 \times 79.98)/1.25 = 1073.01$ K

$M = (3.80 \times .3)(32.24) + (37.52 \times 0.3)(19.25) + (2)(32.24)$

$+ (9.53)(32.24) = 625.16$ K-ft

LL Case III :

a. No water

$P = (979.36 + 211.80 + 11.32)/1.25 = 961.98$ K

b. with water

$P = 961.98 + (2 \times 79.98)/1.25 = 1089.95$ K

$M = (3.80 \times 0.3)(32.24 + (37.52 \times 0.3 \times 19.25) + (2)(32.24)$

$+ (10.59) \times (32.24) = 659.33$ K-ft.

Group VII (133% overstress)

a. No water

$P = 979.36/1.33 = 736.36$ K

b. With water

$P = (979.36 + 2 \times 79.98)/1.33 = 856.63$ K

$M = (\overset{51.80}{\cancel{34.53}} \times 32.24 + 29.3^{K} \times 19.25) + 0.09 \times 1.0 \times [78.3] \times 1.5$

$= \cancel{1687.84}$ K-ft. 2244.63 KFt$/1.33 = 1687.69$ KFt

DMJM	PROJECT: 29th Ave.	PROJECT NO:	PAGE 45
		BY: HTS / DATE: 2/11/85	
SUBJECT: Pier design		BAS 1/2/86	

Check stress

$A = \overset{L \times b}{29 \times 6} = 174.0$, $I = \frac{1}{12}(29)(6)^3 = 522.0\ ft^3$

by inspection , Group I case III , Group III case III , VIII governs.

GROUP	P	M	$\frac{P}{A} + \frac{MC}{I}$ (ksf)	$\frac{P}{A} - \frac{MC}{I}$ (ksf)
I case III w/water	1362.4	0	7.83 ✓	0
III " III w/ water	1089.95	659.33	10.05 ✓	-2.47 ✓
VIII	856.63	1687.84 ✓ OK	14.62 ✓	-4.77 ✓

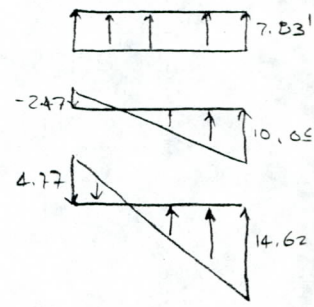

$L = 29'$
$B = 6$ $\Rightarrow$ $\frac{L}{B} = 4.83$ $\Rightarrow$ Continous footing

$\sigma_{allw} = \underline{\underline{15.0}}$ ksf. $>$ 14.62 ksf <u>ok</u>

check over turning

The less vertical load $\longrightarrow$ the less the resisting force hence the lower the F.S. $\Rightarrow$ do not consider water.

GROUP	M (overturning)	M (resisting) $= P \times b/2$	F.S.
II w/o water	675.82	$783.5 \times 1.25 \times 3 = 2938.1$	$\frac{2938.1}{675.82} = 4.4$
VIII w/o water	1687.84 OK	$736.36 \times 1.33 \times 3 = 2938.07$	$\frac{2938.1}{1687.84} = 1.7$

DMJM	PROJECT: 29th Ave	PROJECT NO:	PAGE 46
		BY: HTS / DATE: 7/11/85	
SUBJECT: Pier design		BAS 1/2/86	

Footing design :- Select a 6' wide x 2' thick footing

Shear :-

1) beam shear :- distance d from the face of the concentrated load or reaction area.

$d = 2' \times 12 - 3'' = 21''$ ✓

Consider max. allowable soil press. = 15 KSF

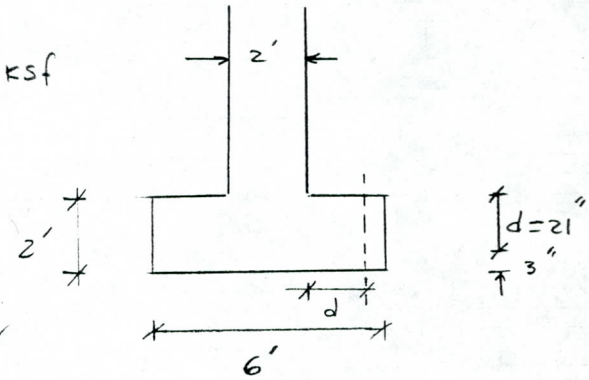

$V = 15 \text{ ksf} \times \frac{3}{12} \times 1'$

$= 3.75 \text{ K}$ ✓

$= 3750 \text{ lb}$ ✓

$v = \frac{V}{bd} = \frac{3750}{12 \times 21} = 14.88 \text{ psi}$ ✓

$v_c = 0.9\sqrt{f'_c} = 0.9\sqrt{3000} = 49.29 \text{ psi}$ ✓ $> v$ ok

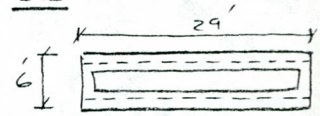

2) Punching shear :- $b_o = 2\left[2' \times 12 + 21 + 29 \times 12\right] = 786 \text{ in}^2$ ✓

Total concentrated load ≡ group I case III w/ water

$= 1362.4 \text{ K}$

$v = \frac{V}{b_o d} = \frac{1362.4}{786 \times 21} = 0.0825 \text{ Ksi} = 82.5 \text{ psi}$ ✓

$v_c = \left(0.8 + \frac{2}{29/6}\right)\sqrt{3000}$

$= 1.214\sqrt{3000} < 1.8\sqrt{f'_c}$

$= 66.48 \text{ psi}$ ✓ $< 82.5 \text{ psi}$

choose 3' thick footing

$b_o = 2\left[2' \times 12 + 33 + 29 \times 12\right] = 810.0 \text{ in}^2$ ✓

$v = \frac{1362.4}{810 \times 33} = 0.051 \text{ ksi} = 50.97 \text{ psi} < v_c = 66.48 \text{ psi}$ ✓

ok

DMJM	PROJECT 29th Ave.	PROJECT NO:	PAGE
		BY: HTS / DATE: 2/11/85	47
SUBJECT Pier design		BAS 1/2/86	

Footing design (cont.)

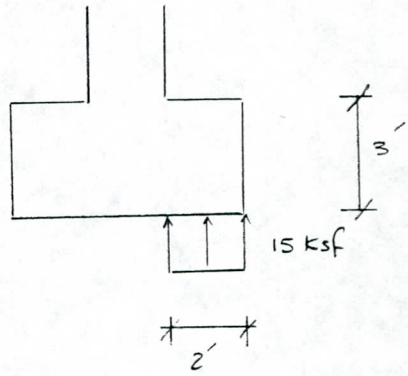

Moment :-

Consider max. allow. soil press.
(For ease of calculations)

moment at face of wall

$M = (15 \times 1') \times 2' \times 1' = 30$ k-ft.

$A_s = \dfrac{M}{f_s j d}$ $\quad j = 0.875$ for balanced conditions with $f'_c = 3000$ psi

$A_s = \dfrac{30 \times 12}{24 \times 0.875 \times 32.5} = 0.53$ in²/ft.

Choose #6 @ 10"

check development length $\quad l_d = \dfrac{0.04\, A_b\, f_y}{\sqrt{f'_c}}$

$= \dfrac{0.04 \times 0.44 \times 60000}{\sqrt{3000}}$

$= 19.3$ in / OK 21' are available

provide temp. and shrinkage reinforcement in long direction

$A_s = 1/8$ in²/ft $\Rightarrow$ #4 at 18" max.

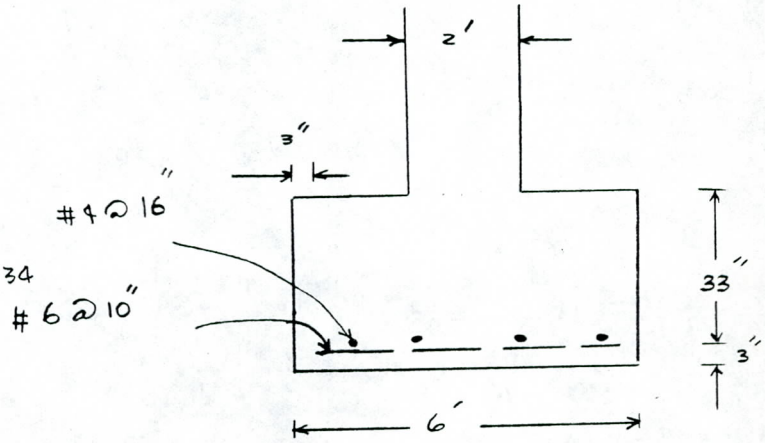

48

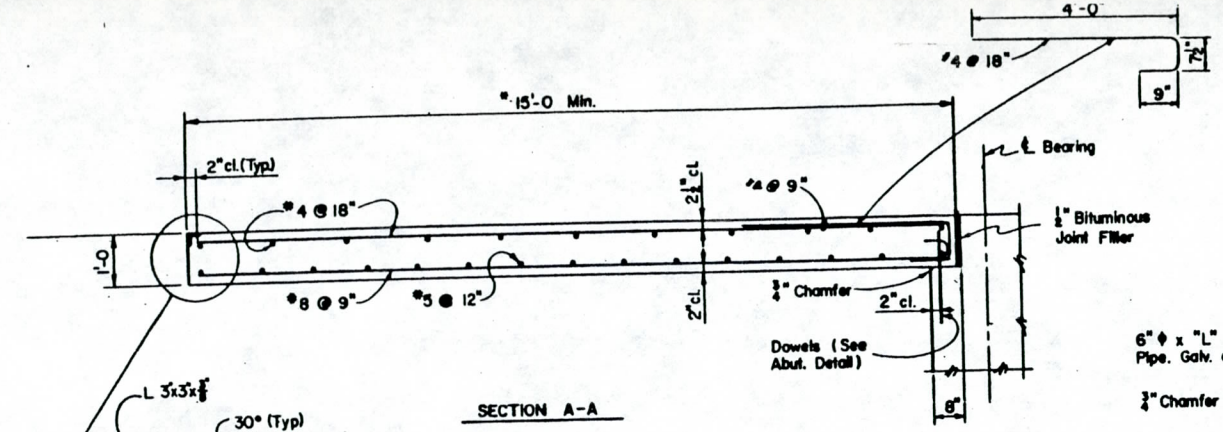

SECTION A-A

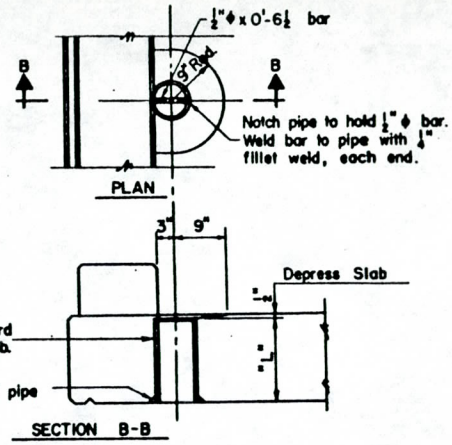

SECTION B-B

ROADWAY DRAIN DETAIL

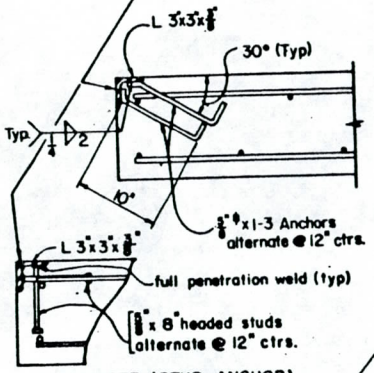

ALTERNATE (STUD ANCHOR)

* Length shall be increased when necessary to eliminate surcharge load.

**For skew angle over 15°.

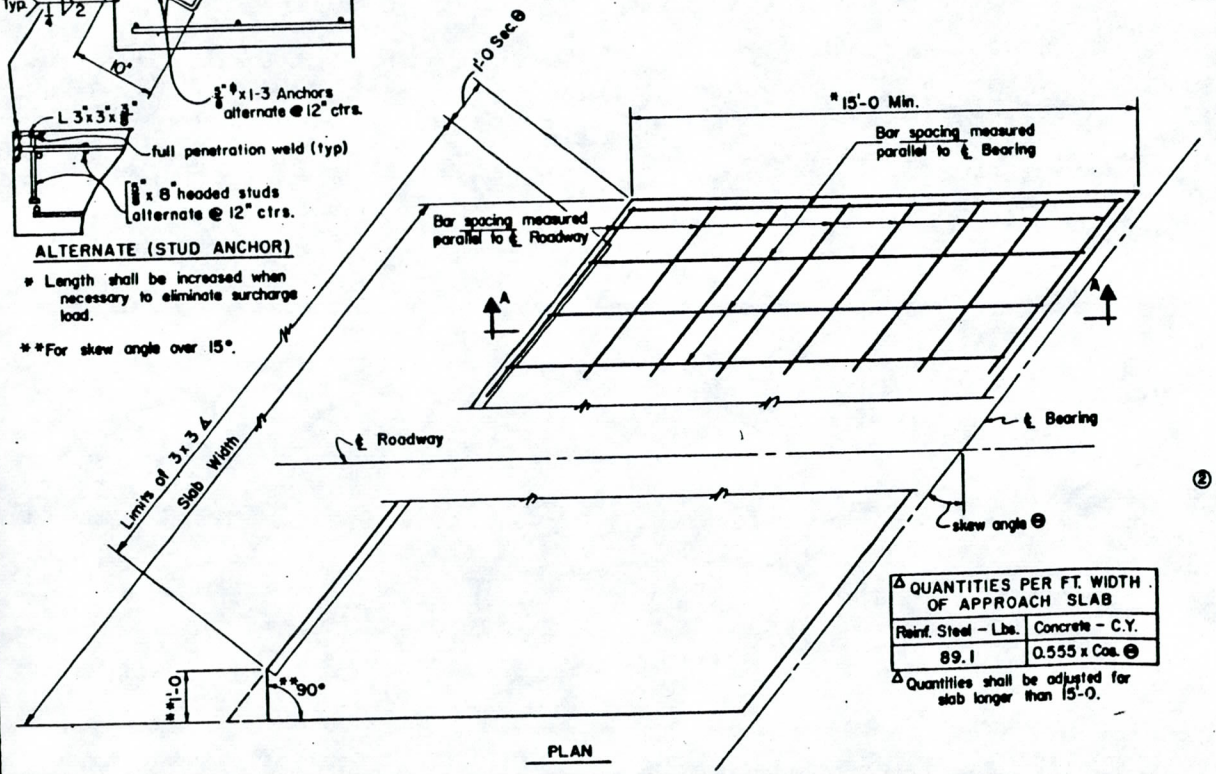

PLAN

Δ QUANTITIES PER FT. WIDTH OF APPROACH SLAB	
Reinf. Steel – Lbs.	Concrete – C.Y.
89.1	0.555 x Cos. θ

Δ Quantities shall be adjusted for slab longer than 15'-0.

APPROACH SLAB

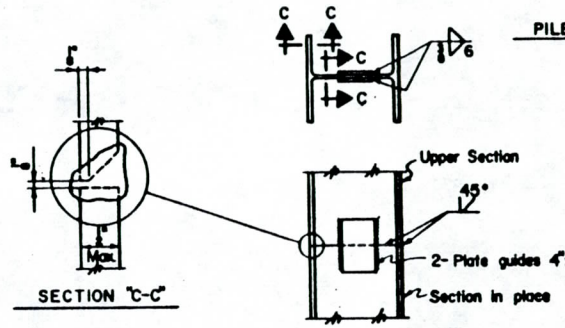

SECTION "C-C"

PILE SPLICE DETAIL

PILE SPLI

When
driving
sectio
hamm
made.
furthe
butt

② PILE POINT NOTE – (only when required).
Manufactured pile points shall be attached by means of a single bevel groove weld across the full width of each exterior face of the flanges of the pile.
The flanges of the pile shall be prepared by flame cutting a 45 degree bevel at the bottom edge of each exterior face of flanges. —
45 degree bevel size shall be ½ the flange thickness.
Groove welds shall be 5/16 for all HP piles 8" thru 14", except HP 13 X 100 and HP 14 X 102 shall be ⅜" and HP 14 X 117 shall be 7/16".

GENERAL NOTES

Concrete shall
Reinforcing ste
Bar sizes #6
Bar sizes #7
Welding shall co
Specifications
Roadway drains
A53, type S,
accordance wi

① NOTES
Structural steel shall conform to ASTM Specification A36.
Paint and painting shall conform to Std. Specifications. Contact surfaces shall not be painted. Structural steel - Shop - 1 coat paint #1, #2 and #3. No field paint required.

DESIGN	JRB	2-73	NO.	DESCRIPTION OF REVISIONS	MADE BY	DATE
DRAWN	RDD	3-73	①	Added Struct. steel & painting note	JTW	7-76
CHECKED	MAB, DWT	3-73	②	Added Pile Point Note	WEB	2-81
			③	Stud alternate added B. chg. detail note	WEB	2-82

DESIGN APPROVED R.C. Brechler

APPROVED FOR DISTRIBUTION E. Schaefer

DEPART

MIS

DMJM	PROJECT: 29th Ave	PROJECT NO:	PAGE 49
		BY: GIS / DATE: 1/23/85	
SUBJECT: Girder Design		BAS 1/2/86	

Interior Girder

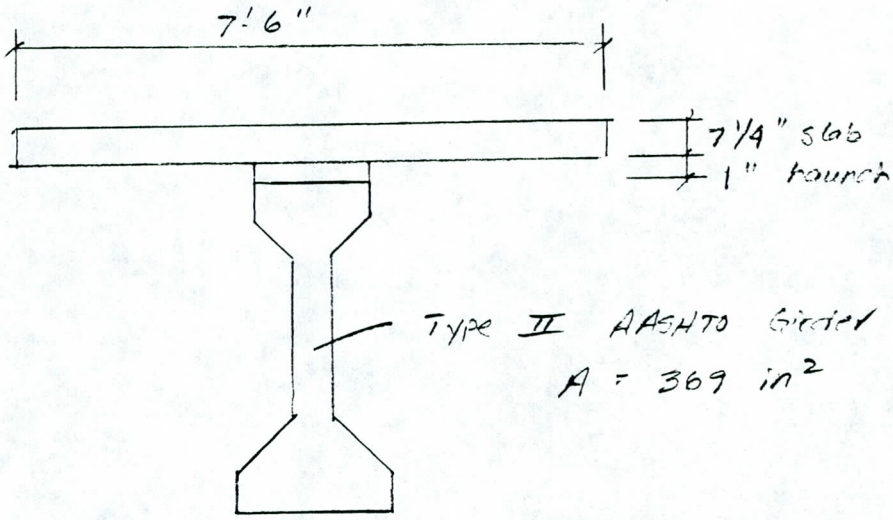

Dead Loads

Non-Composite

slab = (7.25/12)(7.5)(.15) = .680 k/ft ✓

haunch = (1/12)(1.0)(.15) = .013 k/ft ✓

Girder = (369/144)(.15) = .384 k/ft ✓

1.077 k/ft ✓

Diaph. = (9/12)(7.5 - .5)(3)(.15) = 2.36 k ✓

Composite

Sidewalk = (9.5/12)(6'-6 1/2")(.15) / 8 = .097 k/ft ✓

Curb = (13.5/12)(9/12)(.15) / 8 = .016 k/ft ✓

Rail = .06 x 2 / 8 = .015 k/ft ✓

16" Water line = .200 / 8 = .025 k/ft ✓

Other utilities = .01 k/ft .01 k/ft ✓

Asphalt = (2/12)(50)(.144) / 8 = .150 k/ft ✓

.313 k/ft ✓

DMJM	PROJECT 294 Alt	PROJECT NO:		PAGE 50
		BY: GAS	DATE: 12/31/85	
SUBJECT Typical Design		BAS	1/2/86	

Interior Girder

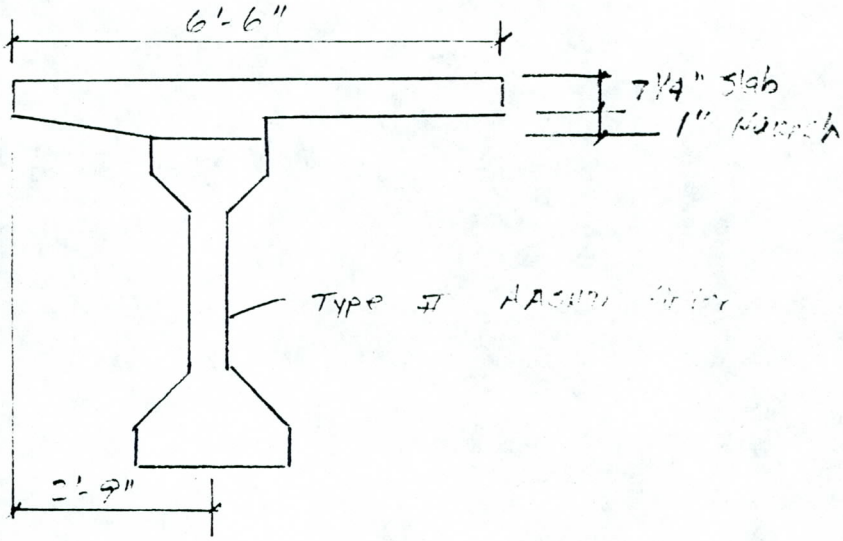

Dead Loads

Non Composite

Slab = (7.25/12)(6.5)(.15) = .589 k/ft

Haunch = (1/12)(1.0)(.15) + (1/2)(2.25)(1/12)(.15) = .027 k/ft

Girder = .384 k/ft

1.00 k/ft

Diaph. = 1/2 × 2.36 = 1.18 k

Composite

∴ DL = .313 k/ft (same as interior)

DMJM	PROJECT: 29th Ave	PROJECT NO:		PAGE 51
		BY: GIS	DATE: 1/23/85	
SUBJECT: Slab Design		BAS	1/2/86	

Girder spacing = 7'-6"

Effective span = 7.5 - 1' = 6.5'

Dead loads

slab = (8/12)(.15) = .1 k/ft

Asphalt = (2/12)(.144) = .024 k/ft

.124 k/ft

$M_{DL} = (.124)(6.5)^2/10 = .524$ k-ft/ft

Live loads

$M_{LL+I} = \left(\frac{6.5+2}{32}\right) \times 16 \times 1.3 \times .8 = 4.42$ k-ft/ft

I

total = 4.944 k-ft/ft

Capacity

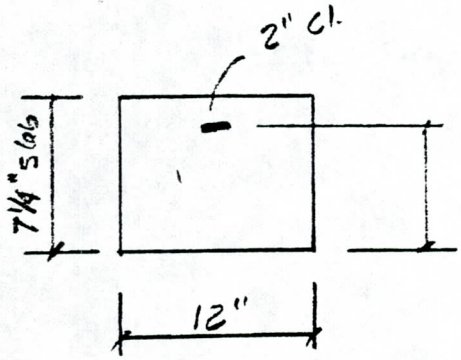

Working stress design:

$f'_c = 4000$ psi ⇒ $f_c = 1600$ psi

$f_y = 60000$ psi ⇒ $f_s = 24000$ psi

$n = 8$

#5 @ 6 1/2" ⇒ $A_s = .57$ in²/ft

use

$M_{cap} = 5.023$ k-ft/ft > 4.944 ✓

OK

Distribution steel

$\% = \frac{220}{\sqrt{6.5}} = 86 \Rightarrow 67\%$ in middle 1/2 of slab

$.67 \times .57 = .38$ in²/ft

Uniformly increasing load from 0 at support:

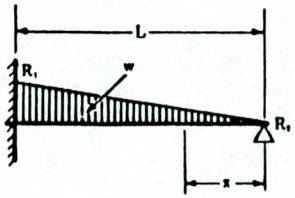

Reactions: $R_1 = \frac{4W}{5}$; $R_2 = \frac{W}{5}$

Bending Moments:

$M_x = Wx\left(\frac{1}{5} - \frac{x^2}{3L^2}\right)$;

$M_{R_1} = M_{max} = \frac{WL}{7.5}$;

$M \approx .06\ WL$ at $x = .447L$

Deflection:

$D_x = \frac{WL^3}{60EI}\left(-\frac{x}{L} + 2\frac{x^3}{L^3} - \frac{x^5}{L^5}\right)$

$D_{max} \approx \frac{WL^3}{210EI}$ at $.447L$

BEAM FIXED AT BOTH ENDS

Concentrated load at center:

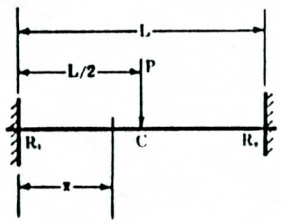

Reaction: $R_1 = R_2 = \frac{P}{2}$

Bending Moments:

$M_x = \frac{PL}{2}\left(\frac{x}{L} - \frac{1}{4}\right)$;

$M_{R_1} = M_{R_2} = -\frac{PL}{8}$;

$M_c = +\frac{PL}{8}$

Deflection: $D_x = \frac{Px^2}{16EI}\left(L - \frac{4x}{3}\right)$;

$D_{max} = \frac{PL^3}{192EI}$

Concentrated load at any point:

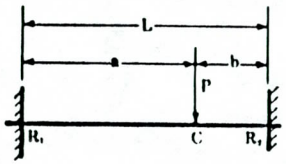

Reactions: $R_1 = \frac{Pb^2}{L^3}(L + 2a)$;

$R_2 = \frac{Pa^2}{L^3}(L + 2b)$

Bending Moments: $M_{R_1} = -\frac{Pab^2}{L^2}$;

$M_{R_2} = -\frac{Pa^2b}{L^2}$; $M_c = \frac{2Pa^2b^2}{L^3}$

Deflection: at point of load $D_P = \frac{Pa^3b^3}{3EIL^3}$

If $a > b$ at $x = \frac{2aL}{L + 2a}$;

$D_{max} = \frac{2\ Pa^3b^2}{3EI\ (L + 2a)^2}$

Uniform load:

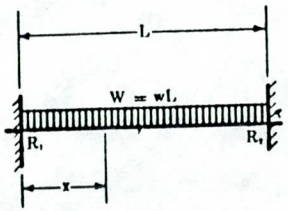

Uniformly increasing load from ends to cent

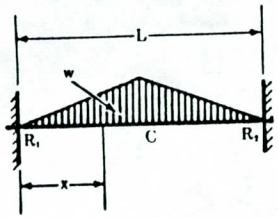

CONTINUOUS BEAMS—SIMPLE SUPPORT

Concentrated load at center of one space:

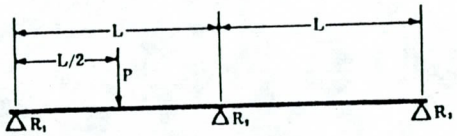

Concentrated load at any point:

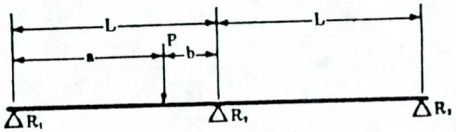

N=1.0

TABLE 2.0

Two-span continuous beam.

Constant moment of inertia.

AASHO HS20-44 loading.

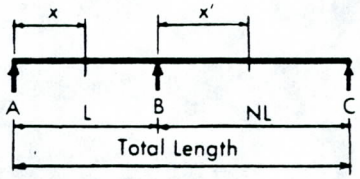

Total Length Ft.	Short Span Length "L"	Max. Reaction Kips.			Max. Shear Kips.		Max. Moment Kip.-ft.			Impact Coefficient				Dist.-Ft.	
		at A	at B	at C	in AB at B	in BC at B	in AB at X	at B	in BC at X'	I	II	III	IV	X	X'
60	30.0	46.4	63.1	46.4	-52.9	52.9	231.4	-193.1	231.4	.300	.300	.300	.270	10.7	19.3
70	35.0	49.5	65.3	49.5	-56.3	56.3	290.9	-229.4	290.9	.300	.300	.300	.256	12.7	22.3
80	40.0	52.0	66.8	52.0	-58.7	58.7	358.2	-266.6	358.2	.300	.300	.300	.244	16.1	23.9
90	45.0	54.1	67.8	54.1	-60.6	60.6	429.1	-317.9	429.1	.294	.294	.294	.233	18.2	26.8
100	50.0	55.7	68.6	55.7	-62.0	62.0	500.7	-373.2	500.7	.286	.286	.286	.222	20.3	29.7
110	55.0	57.1	70.0	57.1	-63.2	63.2	572.9	-432.5	572.9	.278	.278	.278	.213	22.4	32.6
120	60.0	58.3	74.0	58.3	-64.1	64.1	645.5	-495.8	645.5	.270	.270	.270	.204	24.5	35.5
130	65.0	59.3	78.0	59.3	-64.8	64.8	718.5	-563.2	718.5	.263	.263	.263	.196	26.6	38.4
140	70.0	60.2	82.0	60.2	-65.5	65.5	791.6	-634.5	791.6	.256	.256	.256	.189	28.7	41.3
150	75.0	61.0	86.0	61.0	-66.0	66.0	865.0	-709.8	865.0	.250	.250	.250	.182	30.8	44.2
160	80.0	61.6	90.0	61.6	-66.5	66.5	938.6	-789.1	938.6	.244	.244	.244	.175	33.0	47.0
170	85.0	62.2	94.0	62.2	-66.9	66.9	1012.3	-872.4	1012.3	.238	.238	.238	.169	35.1	49.9
180	90.0	62.8	98.0	62.8	-67.2	67.2	1086.0	-959.8	1086.0	.233	.233	.233	.164	37.3	52.7
190	95.0	63.2	102.0	63.2	-67.5	67.5	1159.9	-1051.1	1159.9	.227	.227	.227	.159	39.4	55.6
200	100.0	63.7	106.0	63.7	-67.8	67.8	1233.9	-1146.4	1233.9	.222	.222	.222	.154	41.5	58.5
210	105.0	64.1	110.0	64.1	-68.0	68.0	1307.9	-1245.7	1307.9	.217	.217	.217	.149	43.7	61.3
220	110.0	64.4	114.0	64.4	-70.0	70.0	1382.0	-1349.1	1382.0	.213	.213	.213	.145	45.8	64.2
230	115.0	64.7	118.0	64.7	-72.0	72.0	1456.1	-1456.4	1456.1	.208	.208	.208	.141	48.0	67.0
240	120.0	65.0	122.0	65.0	-74.0	74.0	1530.3	-1567.7	1530.3	.204	.204	.204	.137	50.1	69.9
Impact		I	IV	III	I	III	I	II	III						
Dead Load		.3750 x wL	1.2500 x wL	.3750 x wL	-.6250 x wL	.6250 x wL	.0703 x wL^2	-.1250 x wL^2	.0703 x wL^2					.3750 x L	.6250 x L

ABUT. DESIGN.

SIMPLIFY SECTION GEOMETRY!

FINAL GRADE ELEV. @ ℄ BRG. ABUT 1 ≅ 1,235'.
ELEV. AT BOTTOM OF FOOTING ≅ 1,199'.
h = 36' TOTAL HEIGHT.
LESS 1' FOR APPROACH SLAB THICKNESS.
LESS 3' FOR FOOTING THICKNESS.

SIMPLIFIED SECTION:

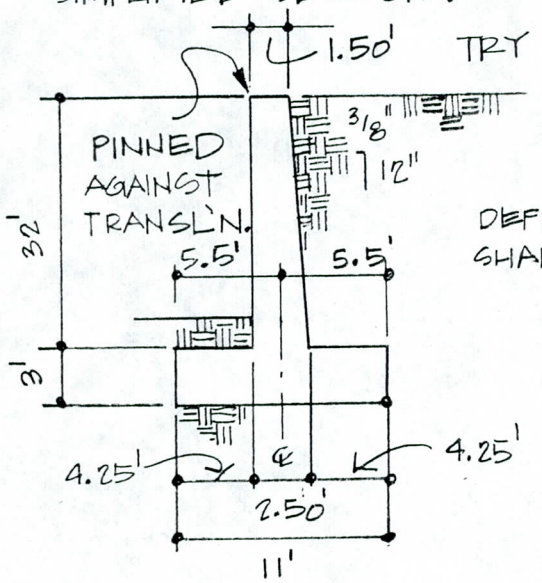

TRY DESIGN AS A PROPED CANTILEVER TO REDUCE OVERTURNING EFFECT OF LATERAL FORCES:

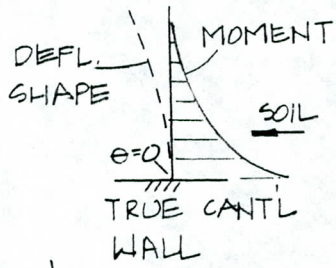

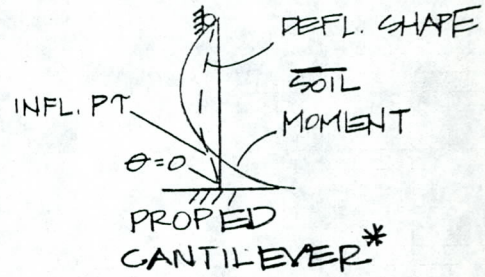

* FIXED BOTTOM IS TO BE MODIFIED TO REFLECT SLIGHT ROTATIO AS IN A PINNED END.

A.)

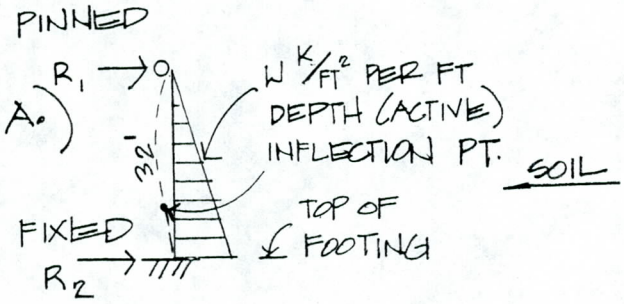

W (K/FT²)	R1 (K)	R2 (K)
.03	3.07	12.29
.04	4.10	16.38
.05	5.12	20.48

B.)

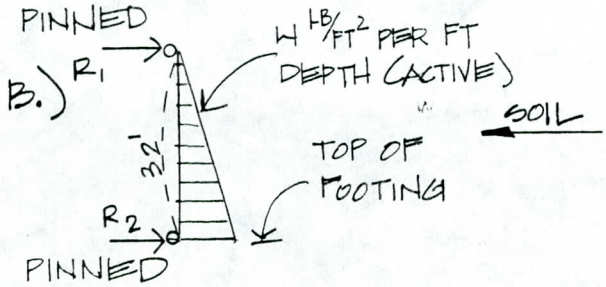

W (K/FT²)	R1 (K)	R2 (K)
.03	5.12	10.24
.04	6.83	13.65
.05	8.53	17.07

2 F.

APPROXIMATE $R_{2\,FINAL}$ BY BRACKETING BETWEEN A.) & B.) AND $w = .04$ & $.05$ K/FT^2

$$R_{2\,FINAL} = (.5)\left(.5(16.3+20.4) + .5(13.6+17.0)\right) = \underline{16.8\ K}$$

$M_{TOP} = 0$, BOTH CASES

$M_{BOTT.}$ CASE B.) $= 0$

$$= W(32)\left(\frac{1}{5} - \frac{(32)^2}{3(32)^2}\right) \qquad W = .045\frac{(32)^2}{2} = 23.0\ K$$

$$= 23.\ K(32)FT\left(-.13\right)$$

$M_{BOTT.}$ CASE A.) $= -98.1$ K·FT

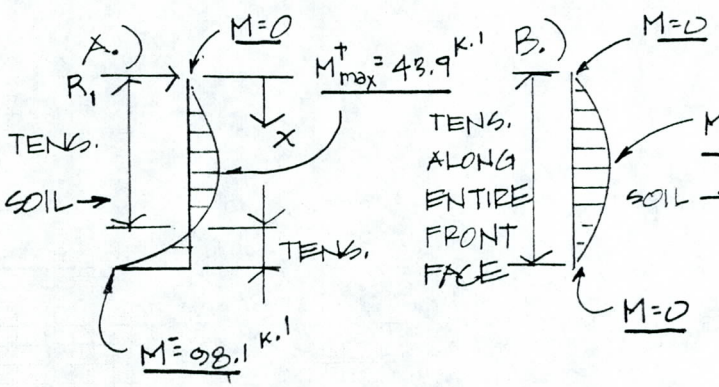

M^+_{MAX} @ $\frac{32}{\sqrt{3}} = 18.48'$ FROM TOP

$$M_{max} = \frac{2WL}{9\sqrt{3}} = \frac{2(23)32}{9\sqrt{3}}$$

$\underline{M_{max} = 94.4\ K\cdot FT}$

FIND POINT OF "0" SHEAR

$$R_1 = \left(.5(4.1+5.1)\right) = 4.60\,K$$

$$4.6 = W\frac{(x)^2}{2} \qquad W = .045$$

$x \cong 14.30$ FT

AT POINT OF "0" SHEAR, MOMENT IS MAXIMUM

$$M_x = W(x)\left(\frac{1}{5} - \frac{x^2}{3(L)^2}\right)$$

$$= 23(14.3)\left(\frac{1}{5} - \frac{14.3^2}{3(32)^2}\right)$$

$M^+_{MAX} = 43.9$ K·FT

3.

BRACKET RESULTS OF LOAD DIAGRAMS

$M_{TOP} = 0$

$M_{BOTT} = .5(98.1 + 0) = 49.05^{K\cdot'}$

$M^{+}_{MAX} = .5(43.9 + 94.4) = 69.1\ K\cdot'$

} DESIGN MOMENTS

APPROXIMATE BRACKETED MOMENT DIAGRAM

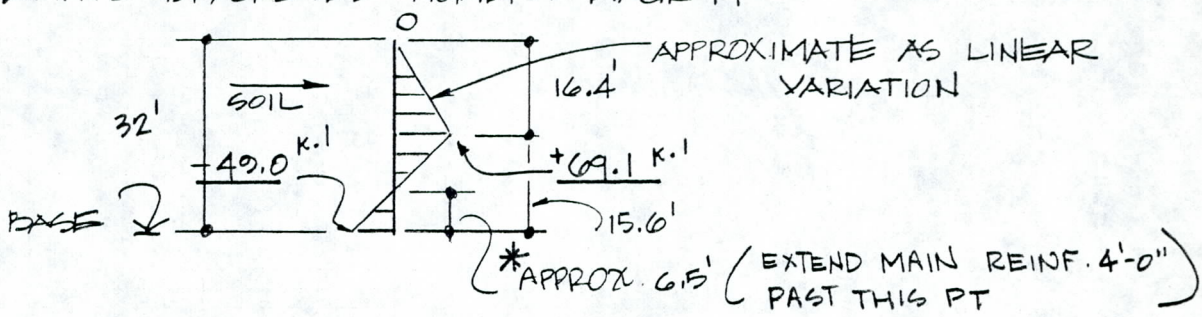

DESIGN WALL FOR SHEAR AT BASE, $b = 12''$ $d = 27''$ $h = 30''$

$V = 16.8K$ DESIGN SHEAR (MAXIMUM)

$v = \frac{16.8(10^3)}{12(27)} = 51.8$ PSI ✓

v_c ALLOW $= .95\sqrt{f'_c} = 52.03$ PSI $> v$ OK FOR SHEAR! ✓

DESIGN WALL FOR FLEXURE AT BASE, $b = 12''$ $d = 27''$ $h = 30''$

$n = E_s/E_c = 9.29$ $M = -49.0^{K\cdot'}$ DESIGN MOMENT

$f_c = 1{,}200$ PSI

$f_s = 24{,}000$ PSI

$\rho_{min} = 1.7\left(\frac{h}{d}\right)^2 \frac{\sqrt{f'_c}}{f_y} = .0019$

$A_{s\,min} = \rho bd = .62\ IN^2/ft.$

TRY #8's @ 8" $A_s = 1.18\ IN^2 > A_{s\,min}$

$b\frac{(kd)^2}{2} - nA_s(d - kd) = 0$ LOCATE N.A. OF MEMBER:

$6(kd)^2 + 10.9609(kd) - 295.9431 = 0$

$kd = \frac{-10.9609 \pm (120.1401 + 7102.6355)^{1/2}}{12} = 6.1688''$ ✓

$k = .2285$ ✓

$jd = 24.9437''$

$j = .9238$

$f_s = M/A_s jd = 19.9$ KSI < 24 KSI

$f_c = M/.5\,bd^2kj = 0.64$ KSI < 1.2 KSI ✓

#8's @ 8" OK!
(USE #8 x ⌋ DOWELS)

DESIGN WALL FOR FLEXURE AT MID-HEIGHT OF WALL (16.4' FROM TOP)

$h = 24"$ $d = 22"$ $b = 12"$

M = 69.1 K·FT DESIGN MOMENT

$\rho_{min} = .0020$

$A_{s\,min} = .51\ IN^2/ft^2$

TRY #8's @ 6" $A_s = 1.57\ IN^2 > A_{s\,min}$ IN FRONT FACE

$kd = 6.20$ IN
$k = 0.28$
$jd = 19.93$ IN
$j = 0.91$

$f_s = M/A_s jd = 26.2$ KSI (9% OVERSTRESSED) ✓

$f_c = M/.5bd^2kj = 1.12$ KSI < 1.2 KSI

#8's @ 6" OK!
(DOWEL TO MATCH |)
EVERY OTHER BAR AT BASE!

TEMP. & SHRINKAGE STEEL IN ALL OTHER AREAS.

FOOTING

A.) TRY FOOTING SYMM. PLACED BENEATH WALL,

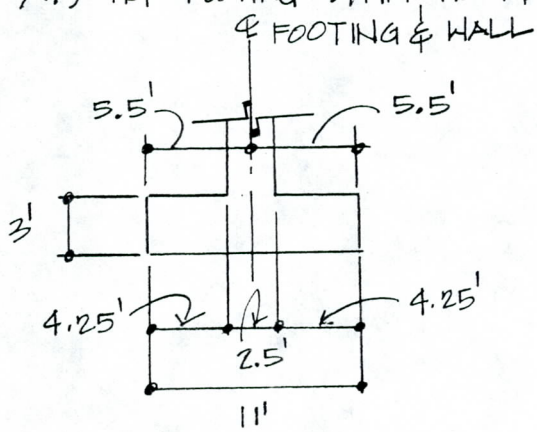

DMJM	PROJECT: 29TH AVE BRIDGE	PROJECT NO:	PAGE
		BY: RKS / DATE: 3/12-85	58
SUBJECT: FINAL ABUT. DESIGN		BAS 1/2/86	

WALL WT = 9.6 K ↓
FOOTING WT = 5.0 K ↓
GIRDER DL REACTIONS 5.3 K ↓
WINGWALL 1.0 K ↓
DIAPHRAMS 0.1 K ↓
APPR. SLAB 0.7 K ↓
Σ = 21.7 K (CONCENTRIC!)

MOMENT DUE TO ECCENTRIC LATERAL SOIL LOADS,
M = 49.0 K·FT

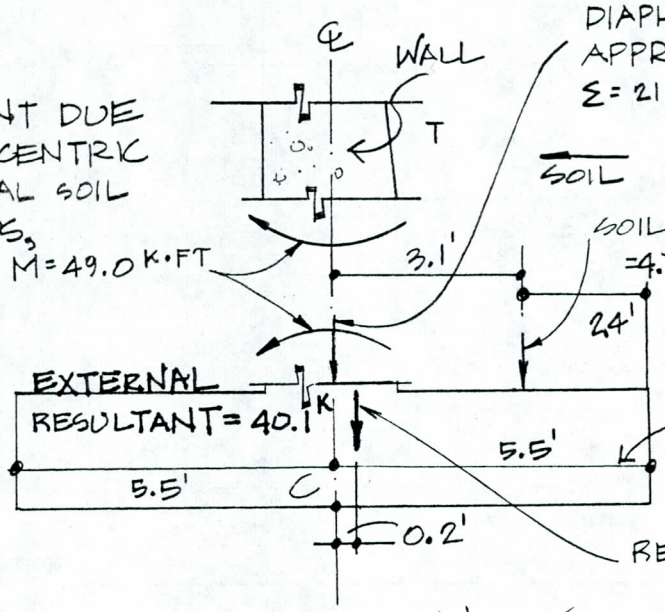

SOIL WEIGHT, (ECCENTRIC!)
= 4.75(32)(1)(.12108) = 18.4 K

FOOTING (SYMM. BENEATH WALL)

RESULTANT (ECCENTRIC!)

$\Sigma M_c = 49.0 \circlearrowleft + 57.0 \circlearrowright = 8.0^{K\cdot'} \circlearrowright$ ✓

$\Sigma F_y = 18.4 + 21.7 = 40.1\ K \downarrow$ ✓

$e = M/P = 8/40.1 = 0.2' < L/6$ ✓ 40.1^K LOAD ACTS ECCENTRICALLY W/ ARM = 0.2'

$$\frac{P}{A} \pm \frac{Mc}{I} = q_{\substack{max \\ min}}$$

$$q_{\substack{max \\ min}} = \frac{40.1^K}{11\ FT^2} \pm \frac{8.0\ K\cdot FT\ (5.5\ FT)}{110.9\ FT^4}$$

$q_{max} = \underline{4.0\ K/FT^2} < q_{allow}$ ✓
$q_{min} = \underline{3.2\ K/FT^2} < q_{allow}$ ✓

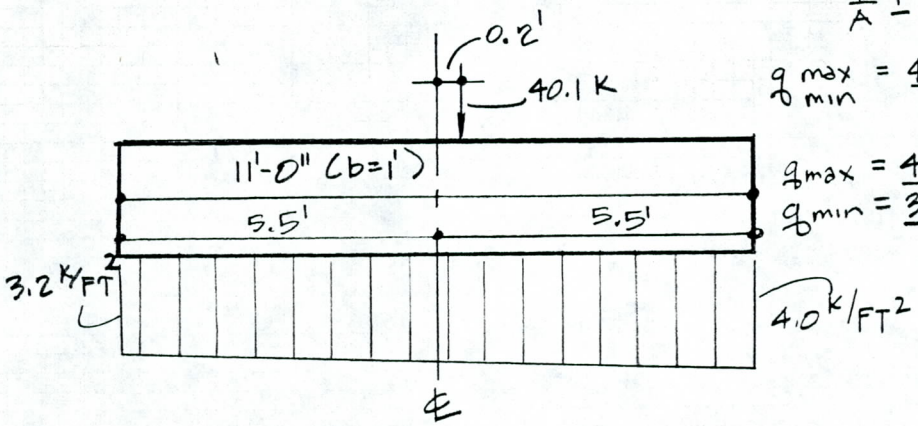

$I = \frac{1(11)^3}{12} = 110.9\ FT^4$ ✓ $c = 5.5\ FT$

6. ADD LIVE LOAD, $\frac{171.84}{58.06} = 3.0$ K/FT (CONCENTRIC)

$q_{max} = 4.3\ K/FT^2 < q_{allow}$

$q_{min} = 3.5\ K/FT^2 < q_{allow}$

WALL 9.6K
GIRDER DL REACTIONS 5.3K
GIRDER LL REACTIONS 3.0K
WINGWALL 1.0K
DIAPH'S 0.1 K
APPR. SLAB 0.7 K
$\Sigma = 19.7$ K ↓ (ECCENTRIC!)

SHIFT FOOTING 1'-6 → (TOWARD HEEL)

TO HELP S.F. AGAINST SLIDING!

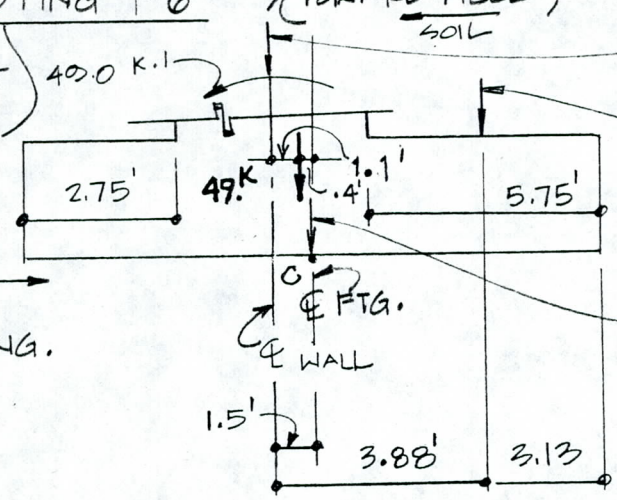

SHIFT FOOTING.

SOIL 6.25(32)(.12108) = 24.2 K ↓ (ECCENTRIC!)

FOOTING 5.0K (CONCENTRIC!)

$\Sigma M_C = 24.2(2.38) - 19.7(1.5) - 40 = 20.9$ K.' ↺

$\Sigma F_V = 49.0$ K ↓

$e = M/F = 0.4$ FT. LEFT OF ℄ FTG.!

$q_{max} = \frac{49}{11} + \frac{20.9(5.5)}{110.9} = \underline{5.5\ KSF}$ $q_{min} = \underline{3.4\ KSF}$

SLIDING SAFETY FACTOR -

P = 49K ↓

RESISTANCE

$\mu P = .45(49) = 22.1$ K = CONTRIBUTED DUE TO FRICTION AGAINST SOIL

$.3\left(\frac{3}{2}\right)^2 = 1.4$ K = RESISTANCE CONTRIBUTED DUE TO PASSIVE E. PRESS. AGAINT FRONT OF TOE OF FTG.

$\mu P + 1.4 = 23.5$ K = TOTAL RESISTANCE AGAINST SLIDING

$\frac{23.5}{16.8} = 1.4 \approx 1.5$ OK!

SEE CALC. FOR DETERMINING R_2, 4 PAGES BACK, TOP OF PAGE.

TOE REINFORCEMENT

$q = 5.5$ KSF ↑
$l = 2.75$ FT
$b = 12''$
$h = 36''$
$d = 32.5''$

$V = 5.5(2.75) = 15.1$ K = DESIGN SHEAR

$v = \frac{15.1(10^3)}{12(32.5)} = 38.8$ psi $\ll v_c$ allow. $= 52.0$ psi $= .95\sqrt{f'_c}$

$M = 5.5\frac{(2.75)^2}{2} = 20.8$ K·' = DESIGN MOMENT

ALTERNATING #8's x L @8" FROM WALL
WILL PROVIDE $0.59 \frac{IN^2}{FT}$ (#8's @16")

ADD #6's @8" STRAIGHT BARS. $A_s = 0.66 \frac{IN^2}{FT}$

$A_{s\ TOTAL} = 1.25\ IN^2$

$\rho_{min} = 1.7\left(\frac{36}{32.5}\right)^2 \frac{\sqrt{3,000}}{60,000} = .0019$ $A_{s\,min} = .74\ IN^2 < A_s$ PROV.

$kd = 7.02$
$k = 0.22$
$jd = 30.16$
$j = 0.93$

$f_s = M/A_s jd = 6.62$ KSI < 24 KSI

$f_c = M/.5bd^2kj = 0.19$ KSI < 1.2 KSI

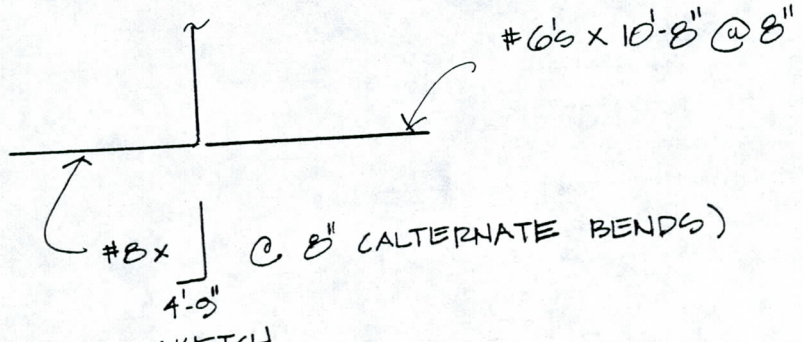

SKETCH

DMJM	PROJECT: 29TH AVE BRIDGE	PROJECT NO:		PAGE
		BY: RKS	DATE: 3/12-85	61
SUBJECT: FINAL ABUT. DESIGN		BAS	1/2/86	

HEEL REINFORCEMENT

BOTTOM REINFORCEMENT ALREADY SET BY DESIGN OF TOE:

#8's X 4'-9" @ 8" (ALTERNATE BENDS) PROVIDE 0.59 IN²/FT

AND #6's X 6'-8" @ 8" PROVIDE 0.66 IN²/FT, A_s = 1.25 IN²/FT TOTAL

q_{up} = 3.4 KSF ↑

L = 5.75 FT
b = 12"
d = 32.5"
h = 36"

V = 5.75(3.4) = 19.55 K = DESIGN SHEAR

$v = \frac{19.55(10^3)}{12(32.5)}$ = 50.1 PSI < v_c allow = 52.0 PSI = $.95\sqrt{f'_c}$

$M = \frac{5.75^2}{2}(3.4)$ = 56.2 K·' = DESIGN MOMENT

$f_s = M/A_s jd$ = 17.9 KSI < 24 KSI

$f_c = M/.5bd^2kj$ = 0.52 KSI < 1.2 KSI

TOP REINFORCEMENT NECESSARY DUE TO SOIL LOAD. ↓

W = 1(32).12108 = 3.87 K/FT ↓

b = 12"
d = 33.5"
h = 36"

V = 5.75(3.87) = 22.2 K = DESIGN SHEAR

$v = \frac{22.2(10^3)}{12(33.5)}$ = 55.2 PSI ≈ v_c allow = 52.0 PSI = $.95\sqrt{f'_c}$

$M = \frac{5.75^2}{2}(3.87)$ = 63.9 K·FT = DESIGN MOMENT TRY #7's @ 6"
A_s = 1.20 IN²

kd = 7.01 in
k = 0.21
jd = 31.10 in
j = 0.93

$f_s = M/A_s jd$ = 20.5 KSI < 24 KSI

$f_c = M/.5bd^2kj$ = 0.58 KSI < 1.2 KSI

DMJM	PROJECT: 20TH AVE BRIDGE	PROJECT NO:	PAGE 62
		BY: RKS / DATE: 3/12-85	
SUBJECT	FINAL ABUT DESIGN	BAS 1/2/86	

USE T&S STEEL IN ALL OTHER DIRECTIONS - #4 @12"

SKETCH
1/4" = 1'-0"

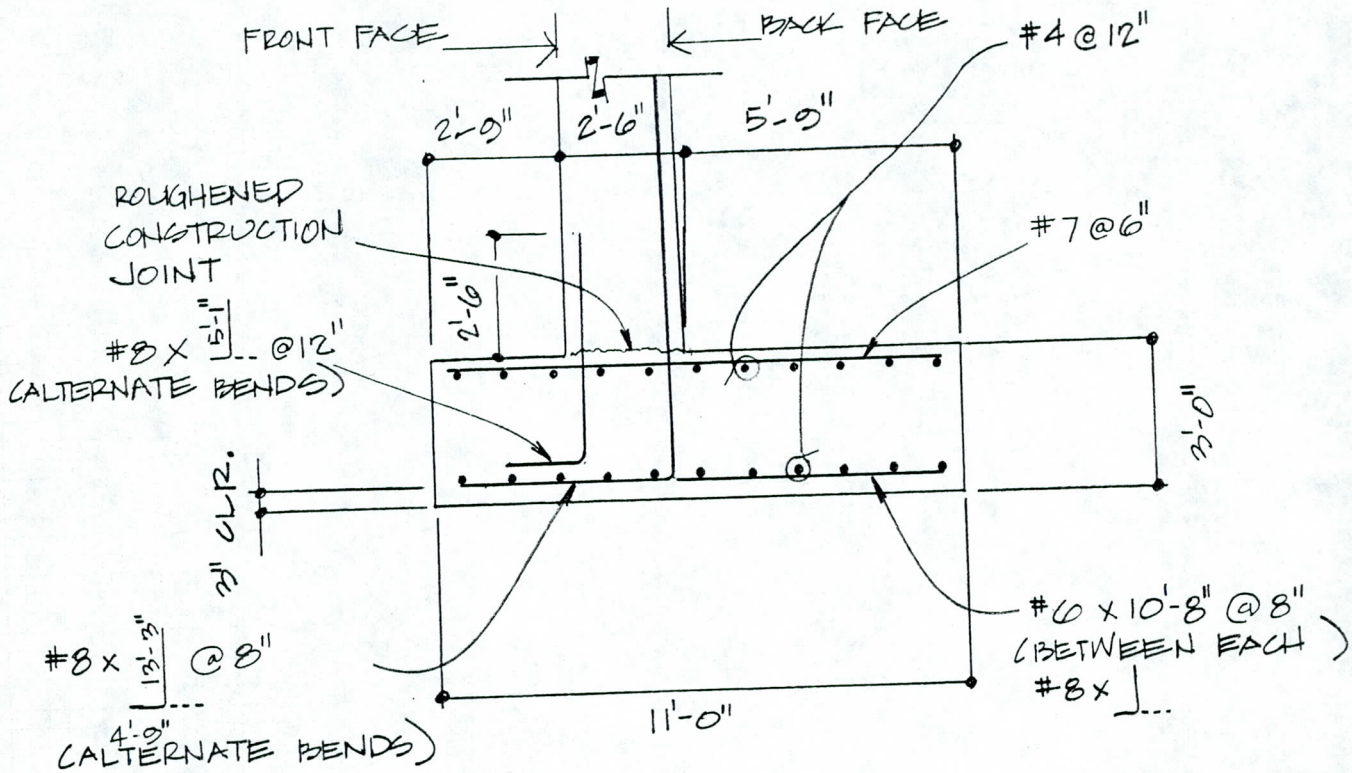

*NOTE:

DESIGN CALC'S ARE VERY CONSERVATIVE SINCE THE DESIGN LOADS ARE BRACKETED RESULTS OF TWO TYPES OF BEHAVIOR, I.E. FIXED BOTTOM VS. PINNED BOTTOM, AND SOIL LATERAL PRESSURES USED COULD VARY FROM 40 LB/FT^2 TO 50 LB/FT^2. SOIL PRESSURES ARE KEPT LOW SO AS NOT TO REACH ALLOWABLES WITH THE BRACKETED DESIGN LOADS.

DMJM	PROJECT: 29TH AVE BRIDGE	PROJECT NO:	PAGE
		BY: RKS / DATE: 3/12-85	63
SUBJECT: FINAL ABUT. DESIGN		BAS 1/2/86	

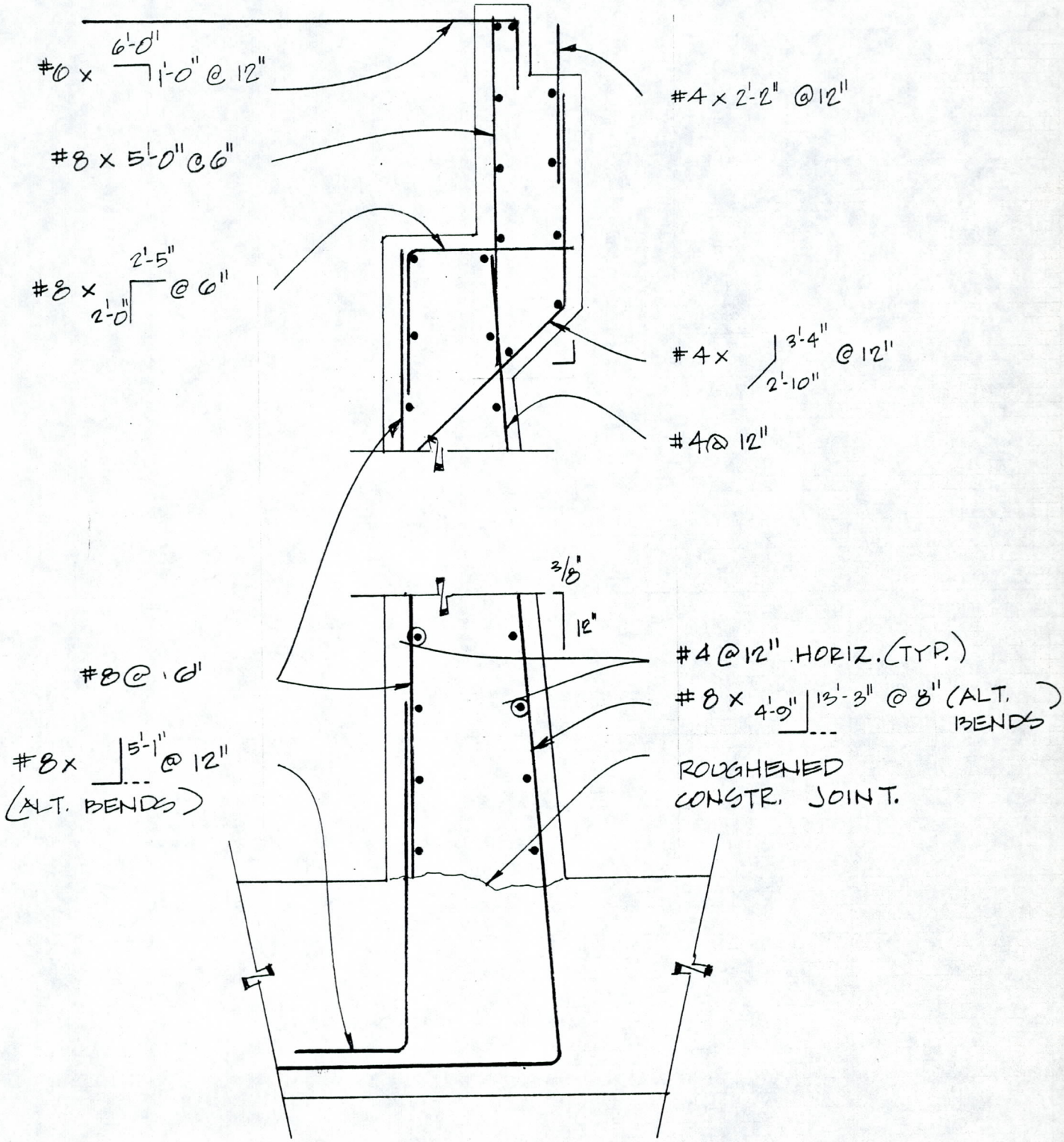

DMJM	PROJECT: 29TH AVE BRIDGE	PROJECT NO: 4252-01-05	PAGE 64
		BY: RKS / DATE: 2/1/85	
SUBJECT: ABUT DESIGN		BAS 1/2/86	

DESIGN SMALL WING-WALLS
- 4'-3" CANTILEVER
- DESIGN FOR 40#/FT² PER' DEPTH SOIL PRESSURE

$.04(32.2) = 1.29 \frac{K}{FT^2}(4.25')(1') = \underline{5.47K} = V$ $\quad v_c = 52.03$ psi

$\frac{5.47(1000)}{52.03(12)} = 8.77'' = d_{min}$ $\quad$ use 12" THICK WINGWALL

$d = 9.50''$

$M = 5.47^K\left(\frac{4.25'}{2}\right) = \underline{11.62^{K\cdot'}} = M$

$\rho_{min} = 0.0019$

$A_{s\,min} = 0.22 \text{ in}^2/\text{FT}$

TRY No. 6's @ 8" $A_s = 0.66 \frac{\text{IN}^2}{\text{FT}} > A_{s\,min}$

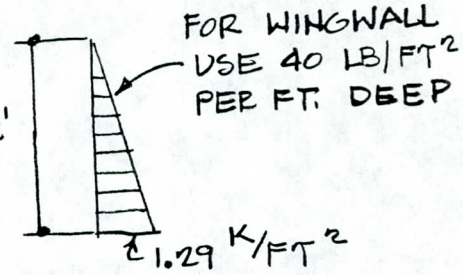

$\frac{b}{2}(kd)^2 - nA_s(d-kd) = 0$

$b = 12''$ $\quad n = 9.29$

$6(kd)^2 + 6.13(kd) - 58.24 = 0$

$kd = \frac{-6.13 \pm (6.13^2 + 4(6)58.24)^{1/2}}{12} = 2.6463$

$k = .2786$

$jd = d - \frac{kd}{3} = 8.6179$

$j = .9071$

$M_{f_s=24} = \frac{0.66(24)}{12} 8.6179 = 11.38 \text{ K}\cdot' < M$

TRY #6's @ 7" $\quad A_s = 0.76 \text{ IN}^2$

$kd = 2.8064$

$k = 0.2954$

$jd = 8.5645$

$j = 0.9015$

$M_{f_s=24} = \frac{0.76(24)}{12} 8.5645 = \underline{13.02 \text{ K}\cdot'}$

$M_{f_c=1.2} = \frac{12(.2954)(9.5)(1.2)}{2(12)} 8.5645 = 14.42^{K\cdot'}$

$M_{cr} = 4.94 \text{ K}'$ $\quad 1.2 M_{cr} = 5.92 \text{ K}\cdot'$

DMJM	PROJECT: 29TH AVE BRIDGE	PROJECT NO: 4252-01-05	PAGE 65
		BY: RKS / DATE: 2/1/85	
SUBJECT: ABUT DESIGN		BAS 1/2/86	

USE #6's @ 7" UP TO .5(HEIGHT OF WALL)

$.04\frac{(32.2)}{2} = 0.64 \frac{K}{FT^2} (4.25')(1') = 2.74 K$ ✓

$M = 2.74\frac{(4.25)}{2} = 5.82 K\cdot' < 1.2 M_{cr}$ ✓

∴ $M = 5.92 K\cdot'$ CRACKING MOMENT (1.2) CONTROLS

TRY NO. 6's @ 12" $A_s = 0.44 IN^2$ $b = 12 IN$ $d = 9.5 IN$ $n = 9.29$

$kd = 2.2260$

$k = 0.2343$

$jd = 8.7580$

$j = 0.9219$

$M_{f_s=24} = \frac{0.44(24)8.7580}{12} = 7.71 K\cdot' > M_{cr}(1.2)$ ✓

$M_{f_c=1.2} = \frac{12(.2343)(9.5)(1.2)}{2(12)} 8.7580 = 11.70 K\cdot' > M_{cr}(1.2)$ ✓

USE #6's @ 12" FROM 0.5H TO TOP.

$l_d = 20"$ EXTEND ALL #6's 24" PAST BACK FACE OF WALL

DMJM	PROJECT: 29TH AVE BRIDGE	PROJECT NO: 4252-01-05	PAGE 66
		BY: RKS / DATE: 2-1-85	
SUBJECT: ABUT DESIGN		BAS 1/2/86	

SKETCH OF SMALL WINGWALL

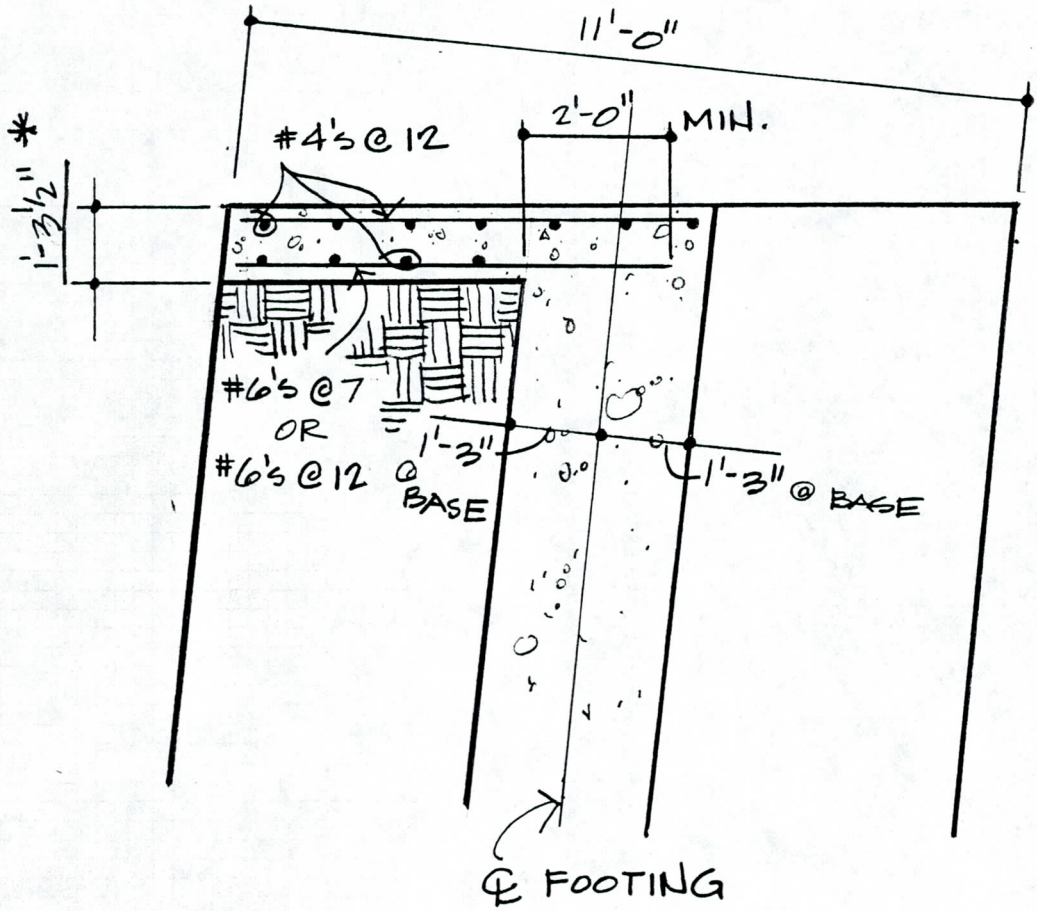

* CHANGE TO 1'-3½" TO ACCOMODATE SETTING OF DADO ON APP. SLAB ON WINGWALL.

DMJM	PROJECT: 29 TH AVE BRIDGE	PROJECT NO: 4252-01-05	PAGE 67
		BY: RKS / DATE: 1-29/85	
SUBJECT: FINAL DESIGN, ABUT 1		BAS 1/2/86	

SKETCH 8

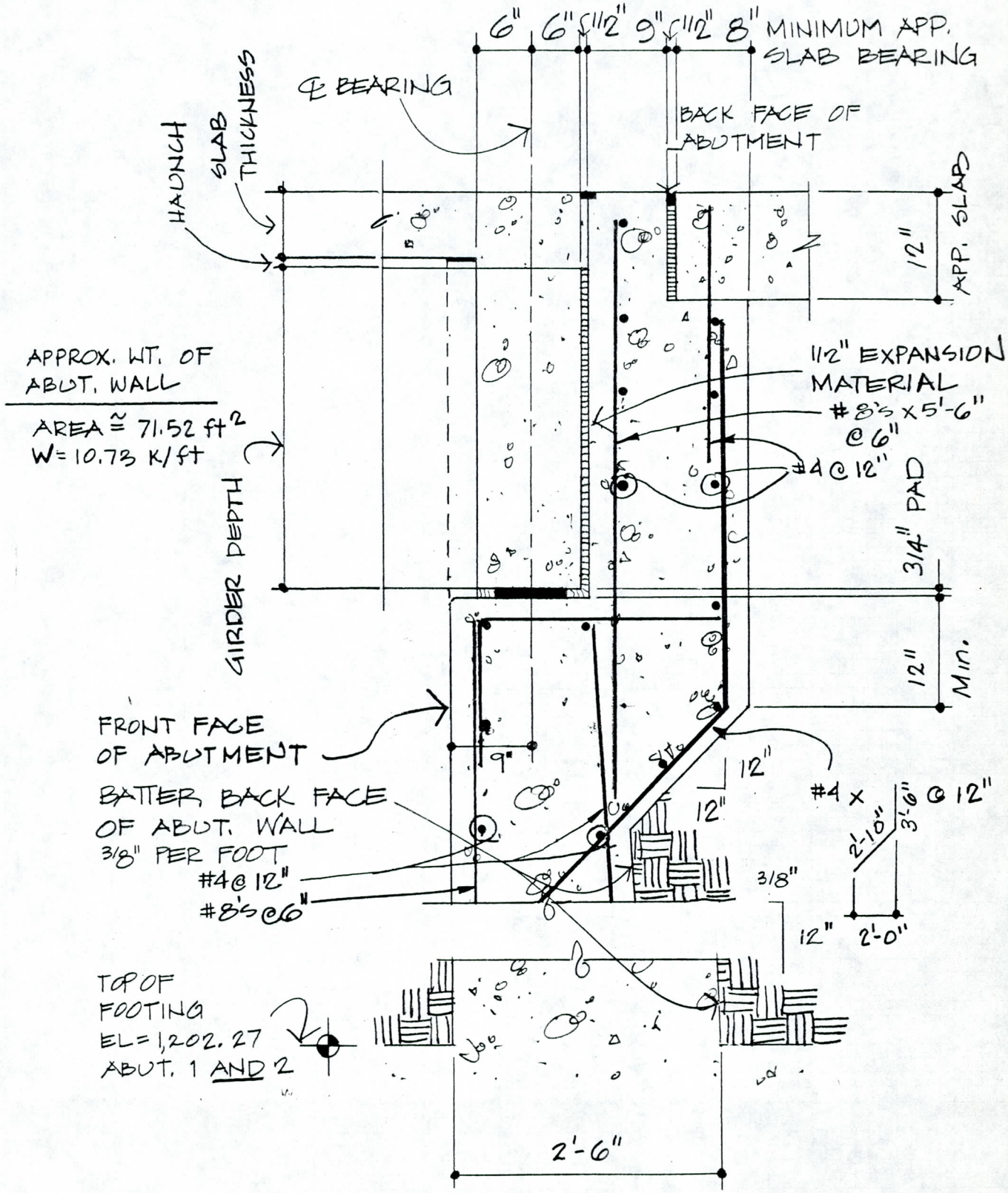

DMJM	PROJECT: 29TH AVE BRIDGE	PROJECT NO: 4252-01-05	PAGE 68
		BY: RKS / DATE: 2-1/85	
SUBJECT: ABUT. DESIGN		BAS 1/2/86	

GIRDER SEAT ELEVS.

ABUT 1

VERT CURVE DATA & SKETCH

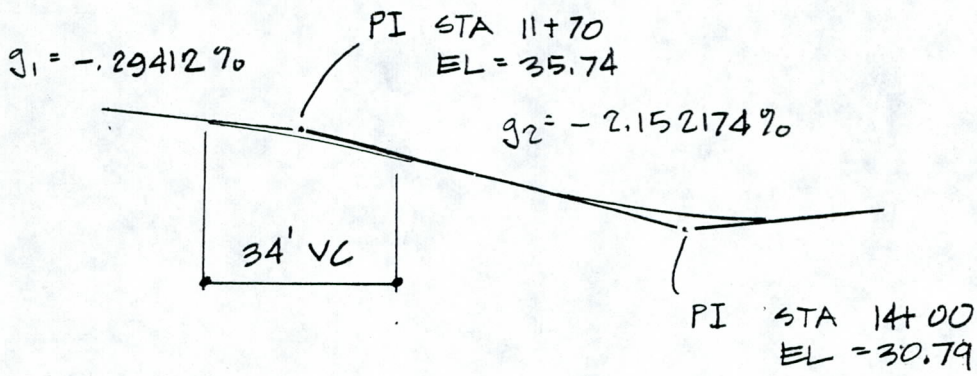

STA. ℄ CONST @ ℄ PIER = 12+42

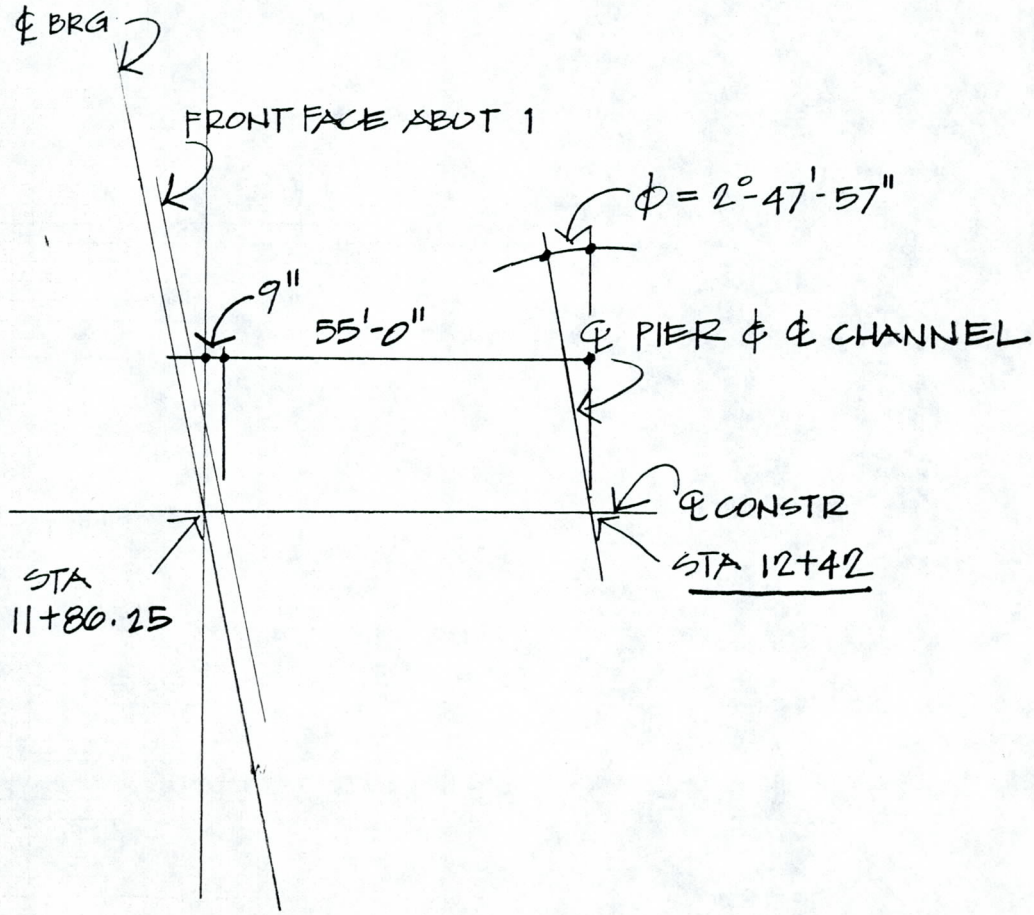

DMJM	PROJECT: 29TH AVE BRIDGE	PROJECT NO: 4252-01-05	PAGE 69
		BY: RKS / DATE: 2-1/85	
SUBJECT: ABUT DESIGN		BAS 1/2/86	

LOOKING UP-STATION, (SIDEWALK IS ON RT. HAND SIDE)
STARTING AT THE LEFT, NUMBER GIRDERS
G1, G2, G3, . . ., G8.

A. GIRDER	B. OFFSET DIST.	C. OFFSET DIST. X tan ϕ	D. STA. = 1186.25 + C.	E. ELEV. @ ℄ CONST.	F. FINAL ELE = E. − .015|B|
G1	−23'-6 1/2"	−1.1510'	11+85.0990	35.414	35.061
G2	−16'-0 1/2"	−0.7843'	+85.4657	35.407	35.166
G3	−8'-6 1/2"	−0.4176'	+85.8324	35.399	35.271
G4	−1'-0 1/2"	−0.0509	+86.1991	35.391	35.375
G5	6'-5 1/2"	0.3158	+86.5658	35.383	35.286
G6	13'-11 1/2"	0.6825	+86.9325	35.376	35.167
G7	21'-5 1/2"	1.0492	+87.2992*	35.368	35.046
G8**	28'-11 1/2"	1.4159	+87.6659*	35.360	34.926

*NOT WITHIN VC

** BELOW SIDEWALK

FROM ALL ABOVE FINAL ELEV.'s "F" SUBTRACT,

7 1/4" SLAB
1" HAUNCH
36" GIRDER
3/4" PAD ← changed to 1/2" pad - reduce elev by 1/4" GIS 2/13/85

45" ÷ 12 = 3.750' TO ARRIVE AT GIRDER SEAT EL.'s

G1 31.311'
G2 31.416'
G3 31.521'
G4 31.625'
G5 31.536'
G6 31.417'
G7 31.296'
G8 31.176'

DMJM	PROJECT: 29TH AVE BRIDGE	PROJECT NO: 4252-01-05	BY: RKS	DATE: 2-1/85	PAGE 70
SUBJECT: ABUT. DESIGN			BAS	1/2/86	

ABUT 2

A. GIRDER	B. OFFSET DIST. "d"	C. "d" x tan φ	D. STA. = 12+97.75 + C.	E. ELEV. @ CONSTR. ℄	F. FINAL ELEV. E - .015|B|
G1	-23'-6½"	-1.1510	12+96.5990	33.015	32.662
G2	-16'-0½"	-0.7843	+96.9657	33.007	32.766
G3	-8'-6½"	-0.4176	+97.3324	33.000	32.872
G4	-1'-0½"	-0.0509	+97.6991	32.992	32.976
G5	6'-5½"	0.3158	+98.0658	32.984	32.887
G6	13'-11½"	0.6825	+98.4325	32.976	32.767
G7	21'-5½"	1.0492	+98.7992	32.968	32.646
G8*	28'-11½"	1.4159	+99.1659	32.960	32.526

*BELOW SIDEWALK

G1	28.912
G2	29.016
G3	29.122
G4	29.226
G5	29.137
G6	29.017
G7	28.896
G8	28.776

Reduce elev by ¼" for change in pad (½" pad)

GIS 2/13/85

PROJECT NO: 4252-01-05 | PAGE 71

BY: RKS | DATE: 2-1-85

PROJECT: 29TH AVE BRIDGE

DMJM

SUBJECT: ABUT DESIGN

BAS 1/2/86

Reduce elev by 1/4" GJS 2/13/85

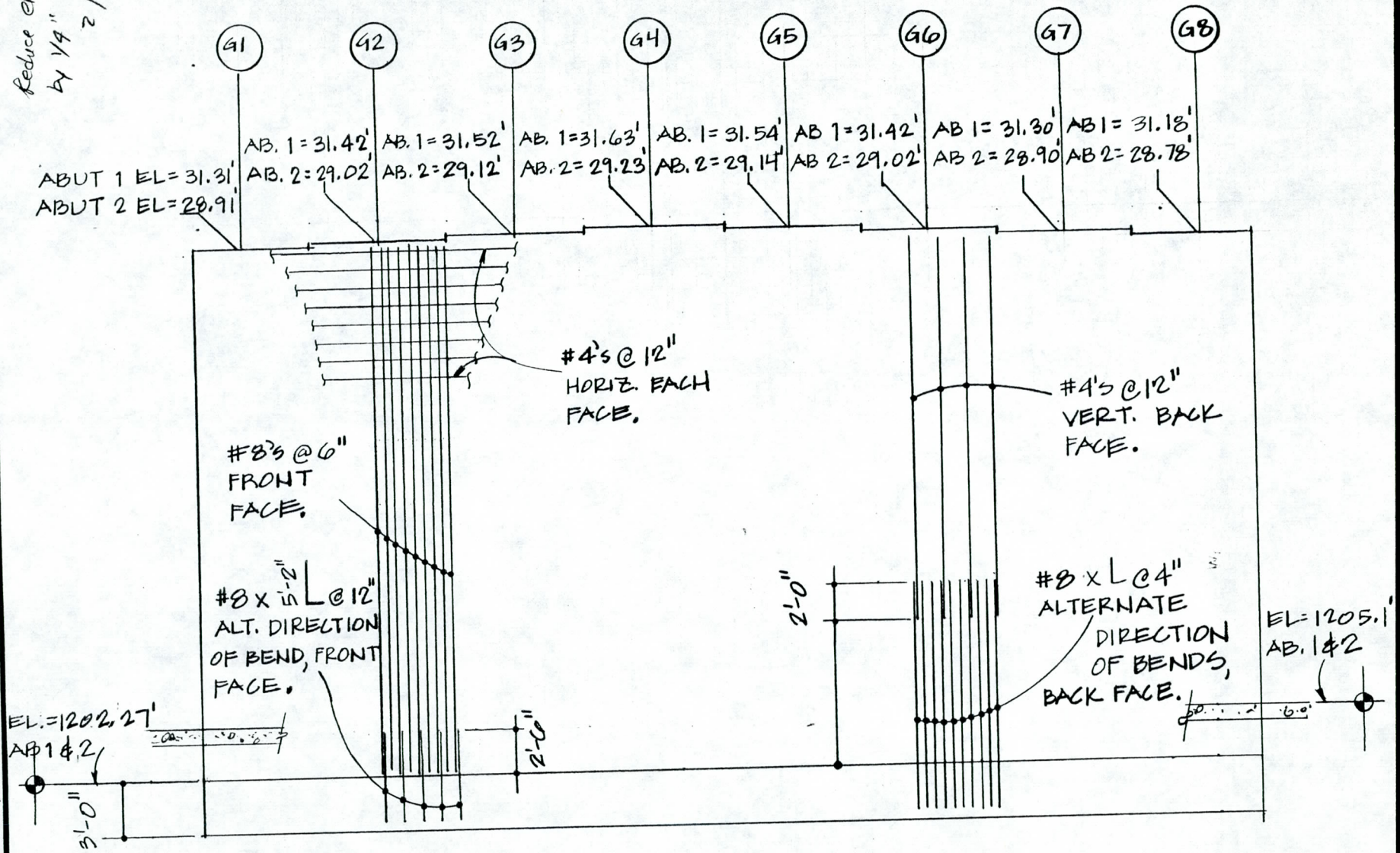

DADO WALL DESIGN

TOTAL HEIGHT ABOVE TOP OF SLAB = $4'-0\frac{5}{8}''$

$H = 4.0' > 2.75'$

$P = 10^K$

$C = 1 + \frac{H-33}{18} \geq 1.0 \qquad C = 1.83$

DISTRIBUTE

$E = 0.8X + 5.0$

$X = 4'-0''$

$E = 8.20'$

$P = 1.83(10) = 18.3^K$

$M = \frac{P}{E}(X) = \frac{18.3}{8.2}(X) \qquad X = 4.0' \qquad M = 8.93^{K\cdot'}$

$V = \frac{P}{E} = \frac{18.13^K}{8.20\ FT} = 2.21\ K/FT$

$v = \frac{2.21(10^3)}{12(13.5)} = 13.65\ psi < v_c\ allow. = 52.03\ psi$ OK IN SHEAR

$\rho_{min} = .0019$

$A_s\ min \cong .26\ in^2/ft$

TRY NO. 5's @ 12 IN $\quad A_s = 0.31\ in^2/ft$

$f_s = 24\ KSI$

$f_c = 1.2\ KSI$

$n = 9.29$

$b = 12\ in \quad d = 11\ in \quad t = 13.5\ in$

$\frac{b(kd)^2}{2} - nA_s(d - kd) = 0$

$kd = 2.0702''$

$k = 0.1882$

$jd = 10.3099''$

$j = 0.9373$

@ $f_s = 24\ KSI \quad M = A_s f_s jd = 6.39^{K\cdot'} < M$

TRY #5's @ 8"

DMJM	PROJECT 29TH AVE BRIDGE	PROJECT NO: 4252-01-05	PAGE 73
		BY: RKS / DATE: 2-1-85	
SUBJECT ABUT DESIGN		BAS 1/2/86	

$A_s = 0.46 \text{ in}^2/\text{ft}$

$kd = 2.4653 \text{ IN}$

$k = 0.2241$

$jd = 10.1782 \text{ IN}$

$j = 0.9253$

@ $f_s = 24$ KSI $\underline{M = 9.36^{k\cdot'} > M = 8.93^{k\cdot'}}$ @ $f_c = 1.2$ KSI $M = 15.05^{k\cdot'}$

DEVELOPEMENT OF #5 BAR

$$l_d = 0.04(.31)\frac{60{,}000}{\sqrt{3{,}000}} = 13.6'' \checkmark$$

$$= .0004(60{,}000).63 = 15.1'' \checkmark$$

$$l_d = (0.8)\left(\frac{.44 = A_{s\,REQ'D}}{.46 = A_{s\,prov}}\right)(15.1) = 11.52'' < 12'' \quad \therefore l_d = 12'' \checkmark$$

$M = 8.93^{k\cdot'}$ TRANSFERED INTO APPROACH SLAB

$t = 12''$

$d = 9.1875''$ $b = 12''$

$A_s = \#4\text{'s @ } 18'' = .133 \text{ IN}^2$ ON STD. SKETCH.

TRY #6's @ 9" $A_s = .59 \text{ IN}^2$

$kd = 2.4760 \text{ IN}$

$k = 0.2695$

$jd = 8.3622 \text{ IN}$

$j = 0.9102$

@ $f_s = 24$ KSI $M = A_s f_s jd = \underline{9.87^{k\cdot'}} > M \checkmark$

@ $f_c = 1.2$ KSI $M = 12.42^{k\cdot'}$

<u>USE #6's @ 9" TOP STEEL IN APP. SLAB.</u>

DMJM	PROJECT TEMP. BRIDGE	PROJECT NO: 4252-01-05	PAGE 84
		BY: RS / DATE: 2-10/85	
SUBJECT	ABUT	B.A.S 1/2/86	

DEAD LOADS –

- GIRDERS X-SEC. AREA ≅ 7.15 FT^2 WT/FT = 1.07 K/FT
- DIAPHRAMS WT = .717 K EA
- BARRIER (DISTRIBUTE EVENLY) X-SEC AREA = 2.65 FT^2 WT/FT = 0.40 K/FT
- ASPHALT (2/12) 27.63 (.144) 40 = 26.52 K

TOTAL DL = 1.07(40)10 + 2(10).717 + 2(.04)40 + 26.52 = 472.06 K

ASSUME 1.75 K/FT ABUT. WT

$\frac{472.06}{40}$ + 1.75 = 13.55 K/FT UNIF. DL

LIVE LOADS –

- H20-44 AASHTO APP A, 80' SIMPLE SPAN, TRUCK CONTROLS.

R^T = 63.6 K PER TRUCK

APPLY ONLY 2 TRUCKS MAXIMUM.

- SIDEWALK – 60 #/FT^2 SIDEWALK 4' WIDE R^S = 4(40).06 = 9.6 K = R^S

QUICK ESTIMATE OF NO. OF PILES & ABUT SIZE.

q_{allow} = 13.5 KSF END BEARING

q_{ds} = .5 KSF SKIN FRICTION

24" ϕ PILE $Q = \left(\frac{2}{1}\right)^2 \pi(13.5) + .5(2)\pi(28)$ = 130.4 K PER PILE

40(13.55) + 2(9.6) + 2(63.6) = 688.40 K = TL

TL/Q = n = 5.28 TRY 5 - 24" ϕ PILES

NOTES

- ALIGN ℄ PILES WITH ℄ BEARING OF GIRDERS
- PROVIDE 1'-0" BACK WALL FOR GIRDER
- AASHTO DICTATES 6" SIDE CLEARANCE TO PILE CAP EDGE, MIN.
- DESIGN AS A CONTINUOUS BEAM, NOT A FRAME.

PILE CAP DESIGN

A. SHEAR

$v_c = .95(f'_c)^{1/2} = 52.03$ PSI ✓

$V_{LL} = 39.41^K$

$V_{DL} = 55.33^K$

REDUCE SINCE THE VALUE ARE TAKEN AT ℄ SUPPORTS

$V_{TL} = 94.74^K \times 0.90 = 85.27^K$ ✓

$b = 24'' + 6'' + 12'' = 42''$ ✓

$d = 27.5''$ (36" TOTAL DEPTH - 6" - 2.5")

$v = \frac{85.27(10^3)}{42(27.5)} = 73.82$ PSI $> v_c$ allow. ✓

∴ SHEAR STEEL REQ'D. USE #4 STIRRUPS, $A_v = 0.40$ IN^2

AASHTO 8.15.5.3.2. $A_v = \frac{(v - v_c) b_w s}{f_s}$

s MAX = d/2 = 13" $b_w = 42''$

$f_s = 20{,}000$ PSI

$v = 73.82$ PSI

$v_c = 52.03$ PSI

$A_v = 0.59$ IN$^2 > 0.40$ IN^2 ✓

∴ REDUCE s TO 8"

$A_v = 0.37$ IN$^2 < 0.40$ ✓

CHECK AASHTO 8.19.1.2.

$A_v = \frac{50 b_w s}{f_y}$ $\quad \frac{.40(40{,}000)}{50(42)} = 7.62$ IN $\approx 8''$ ✓

USE #4 x ☐ @ 8" THROUGHOUT

B. BENDING

$b = 42''$
$d = 27.5''$
$h = 36''$
$f_y = 60{,}000$ PSI $\quad f_s = 24{,}000$ PSI
$f'_c = 3{,}000$ PSI $\quad f_c = 1{,}200$ PSI $\quad f_{cr} = 411$ PSI

$$\rho_{MIN} = 1.7\left(\frac{36}{27.5}\right)^2 \frac{3000^{1/2}}{60{,}000} = .0027$$

+ MOMENT

$M_{DL}^{+} = 40.6$ K·I (.50 SPAN 2)
$M_{LL}^{+} = 19.4$ K·I (.50 SPAN 2)
$M_{TL} = 60.0$ K·I

$M_{DL}^{+} = 22.6$ K·I (.50 SPAN 4)
$M_{LL}^{+} = 44.8$ K·I (.50 SPAN 4)
$M_{TL} = 67.4$ K·I > 60.0 K·I

CHECK CRACKING MOMENT, ASSUME CLOSE TO MIN A_s

A_s MIN $= \rho_{MIN} bd = 3.1$ IN^2
TRY 6-#6's $A_s = 2.65$ IN^2

$$b\frac{(kd)^2}{2} = nA_s(d - kd)$$

$b = 42''$ $\quad n = 9.29$ $\quad A_s = 2.65$ IN^2 $\quad d = 27.5''$

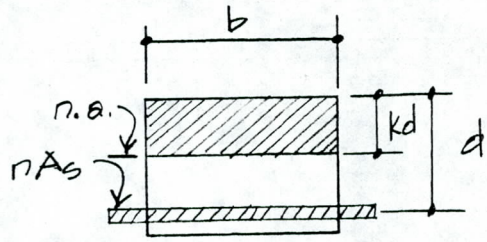

SOLVE FOR kd

$kd = 8.77''$
$k = 0.32$
$jd = 24.58''$
$j = 0.89$

$$M = \frac{bkd}{2} f_c\, jd$$

$f_c = 1.2$ KSI

$M_{cr} = 452.65$ K·I

$1.2 M_{cr} = \underline{543.23^{K\cdot I}} \ggg 67.4^{K\cdot I}$

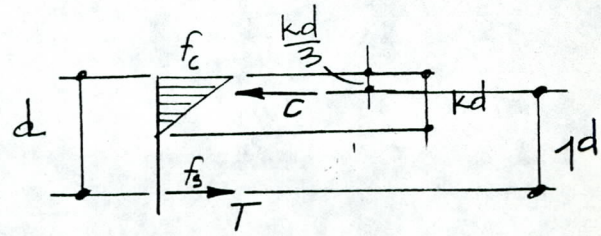

@ $f_s = 24$ ksi & $A_s = 2.65$ IN^2 (6-#6's)

$M = A_s f_s jd = 130.3$ K·I ✓

@ $M = 130.3$ K·I

$f_c = \dfrac{M}{(\frac{1}{2})bd^2kj} = \dfrac{130.3(10^3)12 \text{ IB}\cdot\text{IN}}{(\frac{1}{2})(42)(27.5)^2 .32(.89) \text{ IN}^{\cancel{3}2}} = 345.7$ PSI $\ll f_{cr}$ ✓

$130.3^{K\cdot I} \gg \frac{4}{3}(67.4) = 89.87^{K\cdot I}$ ✓ ∴ 6-#6's ADEQUATE IN +MOMENT

—MOMENT

$M_{DL}^- = -108.4$ K·I (JOINT 5)

$M_{LL}^- = 4.8(4) = -19.2$ K·I ✓

↑ SIDEWALK LOAD PLACED OUT ON CANTILEVER

$M_{TL}^- = -127.60$ K·I $\lll 1.2M_{cr}$ ✓

$\frac{4}{3}(127.60) = 170.13^{K\cdot I} > 130.3^{K\cdot I}$ ✓

TRY 8-#6's $A_s = 3.53$ IN^2 $d = 27.5$ IN ✓

$kd = 9.83''$

$k = 0.36$

$jd = 24.22''$

$j = 0.88$

@ $f_s = 24$ ksi

$M = 3.53(24)\dfrac{24.22}{12} = 171.02^{K\cdot I} > 170.13^{K\cdot I}$ ✓ 8-#6's ADEQUATE IN -MOMENT

SKETCH

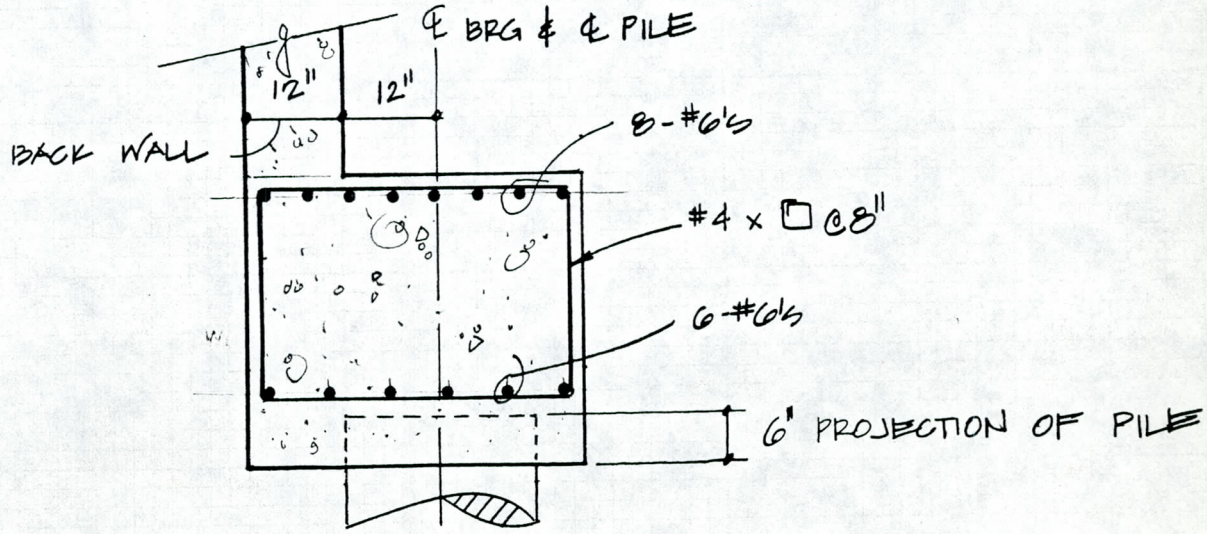

CAISSON DESIGN

$R_{MAX} = \underline{156.95^K > 130.4^K}$ (SUPP #3) (20.3% O.S.)

NOTE: R_{MAX} IS CONSERVATIVE SINCE IT WAS ASSUMED HS20-44 LIVE LOADS WERE NOT DISTRIBUTED VERY FAR. ∴ EXTERIOR SUPPORTS 1, 5 WILL ACTUALLY RECIEVE MORE LOAD THAN THIS ANALYSIS SHOWS THUS REDUCING THE LL REACTIONS ON THE INTERIOR PILES SOMEWHAT.

$\frac{63.6(2)}{32} = 3.95^{K/1}$ ✓

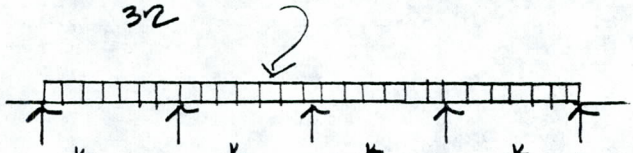

LL	12.42^K	36.12^K	29.32^K	36.12^K	12.42^K
DL	114.05^K	101.62^K	110.66^K	101.62^K	114.05^K

$\underline{TL = 139.9^K \approx Q}$

MINIMUM STEEL CONTROLS REINFORCING OF PILES

$A = \pi(12)^2 = 452.4\ IN^2$ ✓

$1\% = 4.52\ IN^2$, $\underline{6\text{-}\#8\text{'s} = 4.71\ IN^2}$ ✓

<u>USE #3 TIES @ 12"</u>

DMJM	PROJECT: TEMP BRIDGE	PROJECT NO: 4252-01-05	PAGE 89
		BY: RKS / DATE: 2-10/85	
SUBJECT: ABUT DESIGN		BAS 1/2/86	

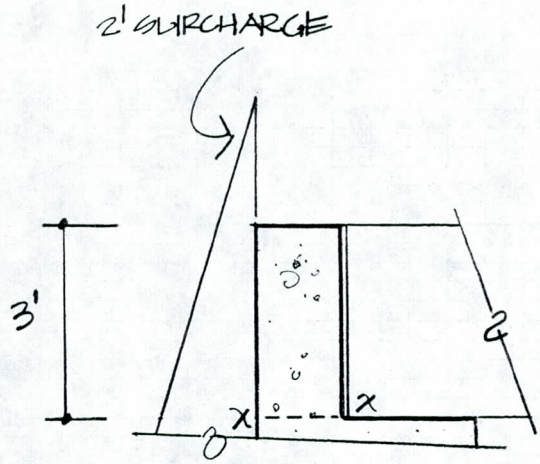

@ x-x, $V = \frac{.03(5)^2}{2} = 0.38^k$ ✓

$v = \frac{V}{(12)9.5} = 3.3$ psi $< v_c$ SECTION OK IN SHEAR ✓

$M = .38\left(\frac{5}{3}\right) = 0.63^{k\cdot'}$ ✓

$A_s = \#4$ @ 12" $A_s = 0.40$ in²/FT

b = 12" d = 9.5"

kd = 2.14"

k = 0.22

jd = 8.79"

j = 0.93

@ $f_s = 24$ ksi $M = 7.03^{k\cdot'} \gg \frac{4}{3}(0.63) = 0.84$ k·' ✓

SKETCH

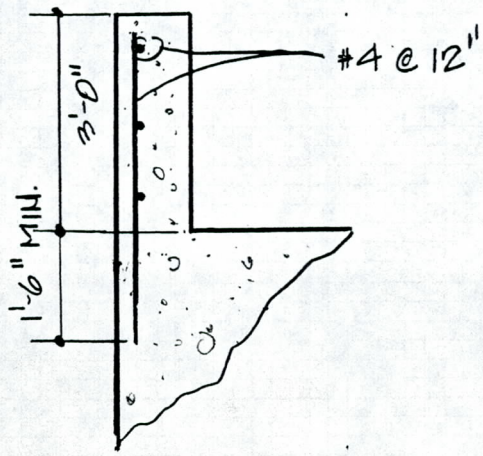

DMJM	PROJECT 29TH AVE BRIDGE	PROJECT NO:		PAGE
		BY: RKS	DATE: 3-12-85	89a
SUBJECT TEMP. ABUT. WINGWALL FTG.		BAS	1/2/86	

WINGWALL, TEMP. ABUT

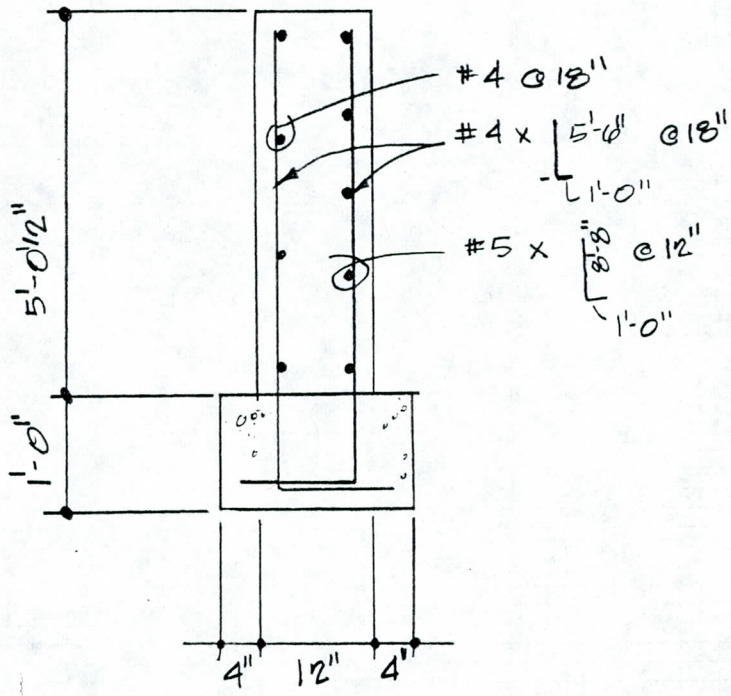

```
100 29TH AVE TEMP ABUT LOAD CASE G DEAD LOAD
110 4 1 1 1 3 0. 2
115 4. .0001 13.55 0. 0 0 0. 0.
120 8. 100. 13.55 0. 0 0 0. 0.
130 8. 100. 13.55 0. 0 0 0. 0.
140 8. 100. 13.55 0. 0 0 0. 0.
155 8. 100. 13.55 0. 0 0 0. 0.
157 4. .0001 13.55 0. 0 0 0. 0.
160 1.0 1.0
170 .0001
180 .0001
190 0.
200 0. 0. 0. 0. 0. 0.
```

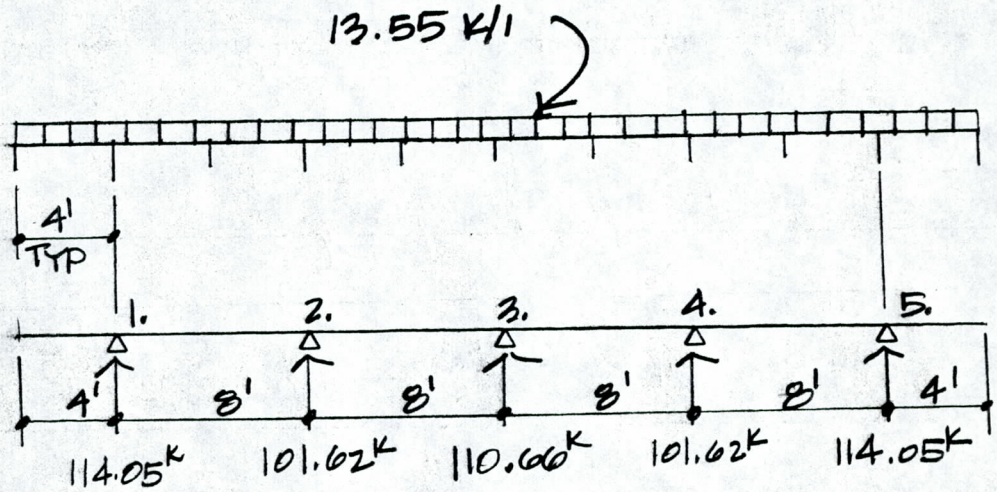

DL

```
100 29TH AVE TEMP ABUT LOAD CASE E LIVE LOAD
110 4 1 1 1 3 0. 2
120 4 .0001 0. 0. 0 0 0. 0.
130 8. 100. 0. 0. 1 0 0. 0.
140 8. 17.4 0.
150 8. 100. 0. 0. 2 0 0. 0.
160 4. 15.9 0. 8. 30.3 0.
170 8. 100. 0. 0. 2 0 0. 0.
180 4. 17.4 0. 8. 15.9 0.
190 8. 100. 0. 0. 1 0 0. 0.
195 4. 30.31 0.
197 4. .0001 0. 0. 0 0 0. 0.
200 1.0 1.0
210 .0001
220 .0001
230 0.
240 0. 0. 0. 0. 0. 0.
```

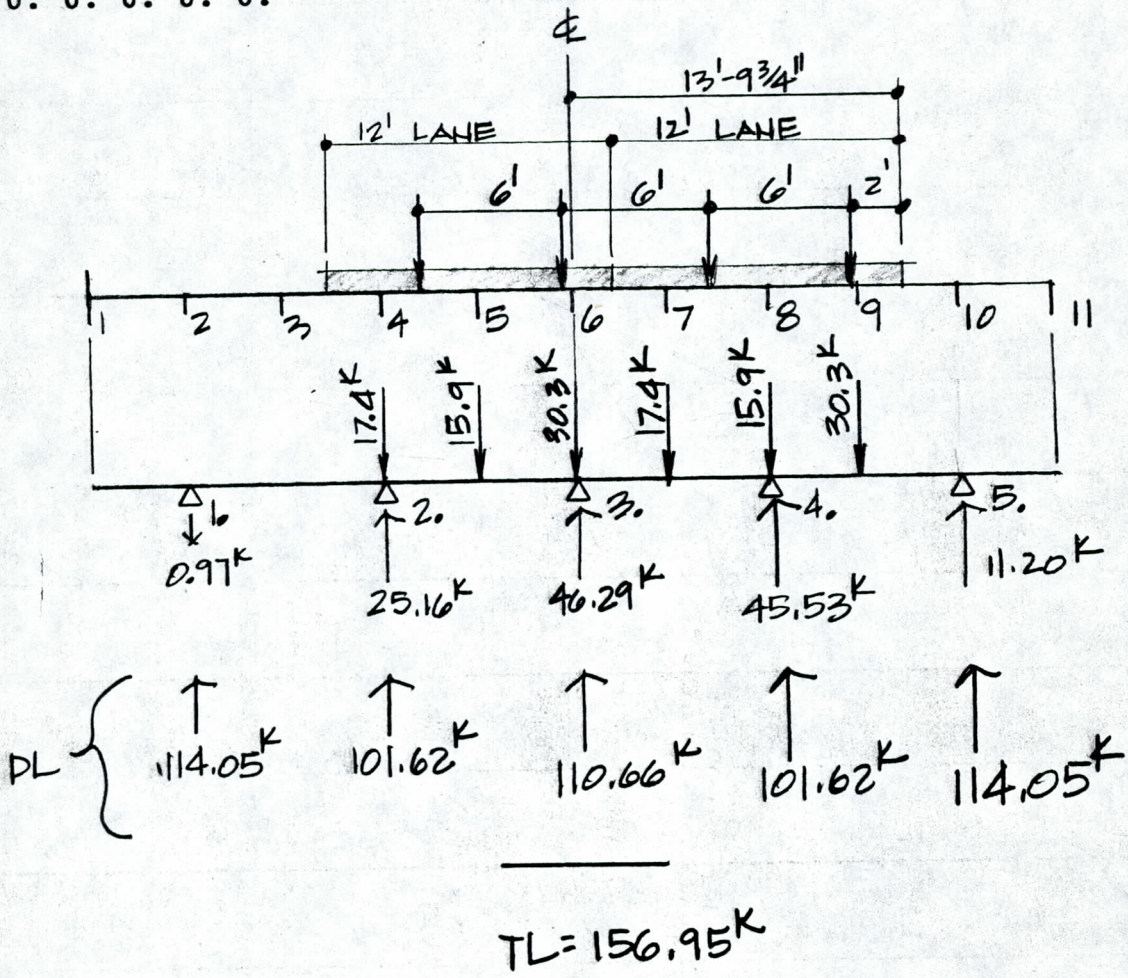

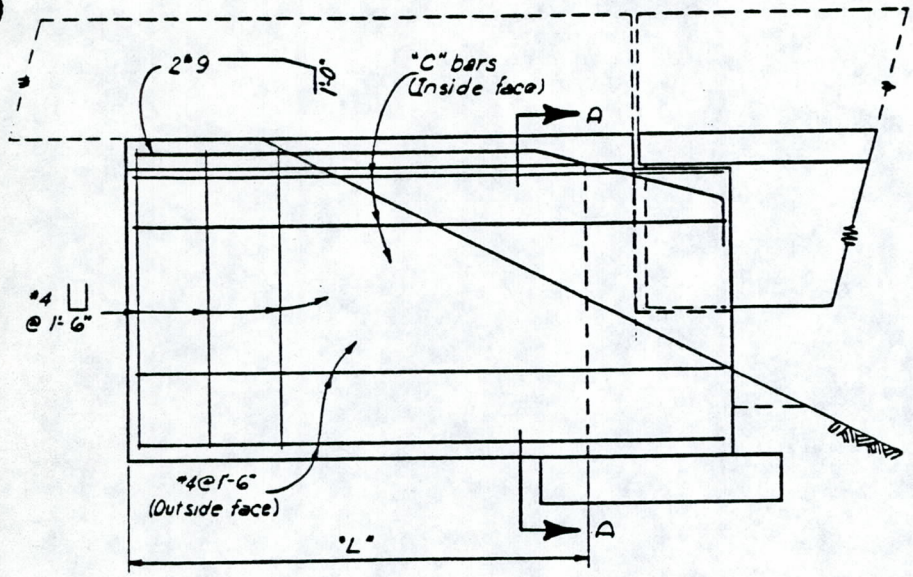

ELEVATION

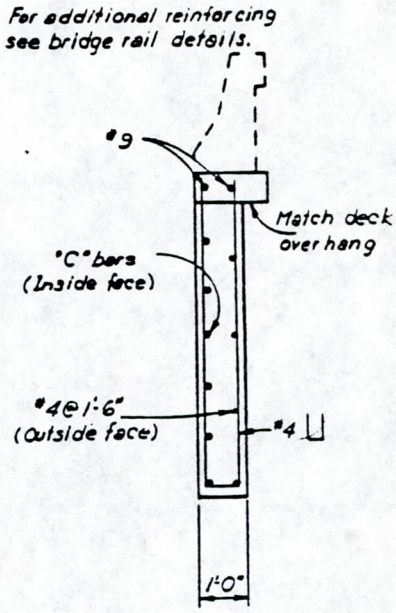

SECTION A-A

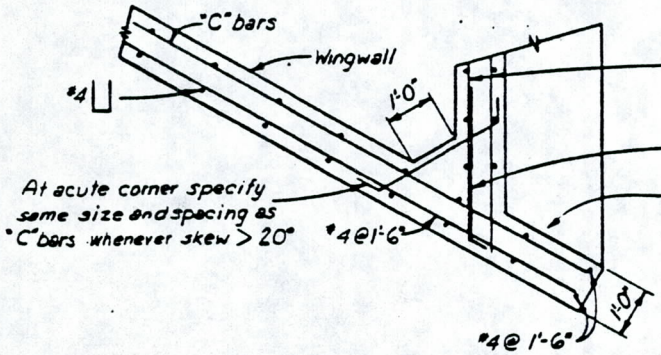

ACUTE CORNER DETAIL

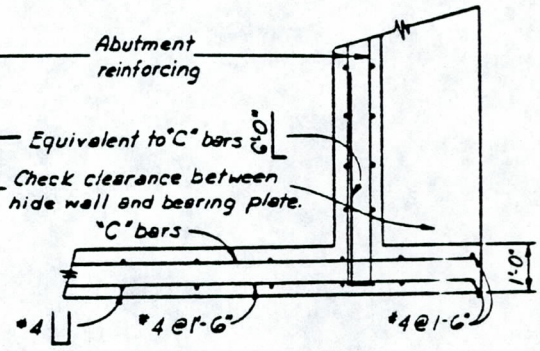

CORNER DETAIL

"L"	"C" bars
10'	#5@1'-0"
12'	#5@9"
14'	#6@9"
16'	#7@9"

"L" may be exceeded by 1'-0"
before using next longer length.

SLIST MOMDONE
OK, SEG LIBRARY>MOMDIST

INPUT DATA FILE NAME OR STOP
RICK4
29TH AVE TEMP ABUT LOAD CASE G DEAD LOAD
0 COLUMN MOMENTS

	DEAD LOAD MOMENTS		TOTAL LOAD MOMENTS	
JOINT	ABOVE	BELOW	ABOVE	BELOW
1	0.0	0.0	0.0	0.0
2	-0.0	-0.0	-0.0	-0.0
3	0.0	0.0	0.0	0.0
4	0.0	0.0	0.0	0.0
5	-0.0	-0.0	-0.0	-0.0

1 BEAM MOMENTS AND SHEARS

		FINAL BEAM MOMENTS				FINAL BEAM SHEARS		
SPAN	STAT.	D.L.	MAX-	MAX++	MIN+	D.L.	LL(M)	LL(T)
0	1.00	-108.4	-108.4			54.20	0.00	0.00
	JOINT NO. 1							
1	0.00	-108.4	-108.4	-108.4	-108.4	59.85	0.00	0.00
	0.05	-85.5	-85.5	-85.5	-85.5			
	0.10	-64.9	-64.9	-64.9	-64.9			
	0.15	-46.3	-46.3	-46.3	-46.3			
	0.20	-30.0	-30.0	-30.0	-30.0			
	0.25	-15.8	-15.8	-15.8	-15.8			
	0.30	-3.8	-3.8	-3.8	-3.8			
	0.35	6.1	6.1	6.1	6.1			
	0.40	13.7	13.7	13.7	13.7			
	0.45	19.2	19.2	19.2	19.2			
	0.50	22.6	22.6	22.6	22.6			
	0.55	23.8	23.8	23.8	23.8			
	0.60	22.8	22.8	22.8	22.8			
	0.65	19.6	19.6	19.6	19.6			
	0.70	14.3	14.3	14.3	14.3			
	0.75	6.8	6.8	6.8	6.8			
	0.80	-2.9	-2.9	-2.9	-2.9			
	0.85	-14.7	-14.7	-14.7	-14.7			
	0.90	-28.7	-28.7	-28.7	-28.7			
	0.95	-44.9	-44.9	-44.9	-44.9			
1	1.00	-63.2	-63.2	-63.2	-63.2	48.55	0.00	0.00
	JOINT NO. 2							
2	0.00	-63.2	-63.2	-63.2	-63.2	53.07	0.00	0.00
	0.05	-43.1	-43.1	-43.1	-43.1			
	0.10	-25.1	-25.1	-25.1	-25.1			
	0.15	-9.3	-9.3	-9.3	-9.3			
	0.20	4.3	4.3	4.3	4.3			
	0.25	15.8	15.8	15.8	15.8			
	0.30	25.1	25.1	25.1	25.1			
	0.35	32.2	32.2	32.2	32.2			
	0.40	37.2	37.2	37.2	37.2			
	0.45	40.0	40.0	40.0	40.0			
	0.50	40.6	40.6	40.6	40.6			
	0.55	39.1	39.1	39.1	39.1			
	0.60	35.4	35.4	35.4	35.4			
	0.65	29.5	29.5	29.5	29.5			
	0.70	21.5	21.5	21.5	21.5			

	0.75	11.3	11.3	11.3	11.3			
	0.80	-1.1	-1.1	-1.1	-1.1			
	0.85	-15.6	-15.6	-15.6	-15.6			
	0.90	-32.3	-32.3	-32.3	-32.3			
	0.95	-51.2	-51.2	-51.2	-51.2			
2	1.00	-72.3	-72.3	-72.3	-72.3	55.33	0.00	0.00
JOINT NO. 3								
3	0.00	-72.3	-72.3	-72.3	-72.3	55.33	0.00	0.00
	0.05	-51.2	-51.2	-51.2	-51.2			
	0.10	-32.3	-32.3	-32.3	-32.3			
	0.15	-15.6	-15.6	-15.6	-15.6			
	0.20	-1.1	-1.1	-1.1	-1.1			
	0.25	11.3	11.3	11.3	11.3			
	0.30	21.5	21.5	21.5	21.5			
	0.35	29.5	29.5	29.5	29.5			
	0.40	35.4	35.4	35.4	35.4			
	0.45	39.1	39.1	39.1	39.1			
	0.50	40.6	40.6	40.6	40.6			
	0.55	40.0	40.0	40.0	40.0			
	0.60	37.2	37.2	37.2	37.2			
	0.65	32.2	32.2	32.2	32.2			
	0.70	25.1	25.1	25.1	25.1			
	0.75	15.8	15.8	15.8	15.8			
	0.80	4.3	4.3	4.3	4.3			
	0.85	-9.3	-9.3	-9.3	-9.3			
	0.90	-25.1	-25.1	-25.1	-25.1			
	0.95	-43.1	-43.1	-43.1	-43.1			
3	1.00	-63.2	-63.2	-63.2	-63.2	53.07	0.00	0.00
JOINT NO. 4								
4	0.00	-63.2	-63.2	-63.2	-63.2	48.55	0.00	0.00
	0.05	-44.9	-44.9	-44.9	-44.9			
	0.10	-28.7	-28.7	-28.7	-28.7			
	0.15	-14.7	-14.7	-14.7	-14.7			
	0.20	-2.9	-2.9	-2.9	-2.9			
	0.25	6.8	6.8	6.8	6.8			
	0.30	14.3	14.3	14.3	14.3			
	0.35	19.6	19.6	19.6	19.6			
	0.40	22.8	22.8	22.8	22.8			
	0.45	23.8	23.8	23.8	23.8			
	0.50	22.6	22.6	22.6	22.6			
	0.55	19.2	19.2	19.2	19.2			
	0.60	13.7	13.7	13.7	13.7			
	0.65	6.1	6.1	6.1	6.1			
	0.70	-3.8	-3.8	-3.8	-3.8			
	0.75	-15.8	-15.8	-15.8	-15.8			
	0.80	-30.0	-30.0	-30.0	-30.0			
	0.85	-46.3	-46.3	-46.3	-46.3			
	0.90	-64.9	-64.9	-64.9	-64.9			
	0.95	-85.5	-85.5	-85.5	-85.5			
4	1.00	-108.4	-108.4	-108.4	-108.4	59.85	0.00	0.00
JOINT NO. 5								
5	0.00	-108.4	-108.4			54.20	0.00	0.00

INPUT DATA FILE NAME OR STOP
RICK6
29TH AVE TEMP ABUT LOAD CASE E LIVE LOAD
0 COLUMN MOMENTS

	DEAD LOAD MOMENTS		TOTAL LOAD MOMENTS	
JOINT	ABOVE	BELOW	ABOVE	BELOW
1	0.0	0.0	0.0	0.0
2	-0.0	-0.0	-0.0	-0.0
3	0.0	0.0	0.0	0.0

4	-0.0	-0.0	-0.0	-0.0
5	0.0	0.0	0.0	0.0

93B

1 BEAM MOMENTS AND SHEARS

		FINAL BEAM MOMENTS				FINAL BEAM SHEARS		
SPAN	STAT.	D.L.	MAX-	MAX++	MIN+	D.L.	LL(M)	LL(T)
0	1.00	0.0	0.0			0.00	0.00	0.00
	JOINT NO.	1						
1	0.00	0.0	0.0	0.0	0.0	-0.97	0.00	0.00
	0.05	-0.4	-0.4	-0.4	-0.4			
	0.10	-0.8	-0.8	-0.8	-0.8			
	0.15	-1.2	-1.2	-1.2	-1.2			
	0.20	-1.6	-1.6	-1.6	-1.6			
	0.25	-1.9	-1.9	-1.9	-1.9			
	0.30	-2.3	-2.3	-2.3	-2.3			
	0.35	-2.7	-2.7	-2.7	-2.7			
	0.40	-3.1	-3.1	-3.1	-3.1			
	0.45	-3.5	-3.5	-3.5	-3.5			
	0.50	-3.9	-3.9	-3.9	-3.9			
	0.55	-4.3	-4.3	-4.3	-4.3			
	0.60	-4.7	-4.7	-4.7	-4.7			
	0.65	-5.0	-5.0	-5.0	-5.0			
	0.70	-5.4	-5.4	-5.4	-5.4			
	0.75	-5.8	-5.8	-5.8	-5.8			
	0.80	-6.2	-6.2	-6.2	-6.2			
	0.85	-6.6	-6.6	-6.6	-6.6			
	0.90	-7.0	-7.0	-7.0	-7.0			
	0.95	-7.4	-7.4	-7.4	-7.4			
1	1.00	-7.8	-7.8	-7.8	-7.8	18.37	0.00	0.00
	JOINT NO.	2						
2	0.00	-7.8	-7.8	-7.8	-7.8	6.79	0.00	0.00
	0.05	-5.0	-5.0	-5.0	-5.0			
	0.10	-2.3	-2.3	-2.3	-2.3			
	0.15	0.4	0.4	0.4	0.4			
	0.20	3.1	3.1	3.1	3.1			
	0.25	5.8	5.8	5.8	5.8			
	0.30	8.5	8.5	8.5	8.5			
	0.35	11.3	11.3	11.3	11.3			
	0.40	14.0	14.0	14.0	14.0			
	0.45	16.7	16.7	16.7	16.7			
	0.50	19.4	19.4	19.4	19.4			
	0.55	15.8	15.8	15.8	15.8			
	0.60	12.1	12.1	12.1	12.1			
	0.65	8.5	8.5	8.5	8.5			
	0.70	4.8	4.8	4.8	4.8			
	0.75	1.2	1.2	1.2	1.2			
	0.80	-2.5	-2.5	-2.5	-2.5			
	0.85	-6.1	-6.1	-6.1	-6.1			
	0.90	-9.7	-9.7	-9.7	-9.7			
	0.95	-13.4	-13.4	-13.4	-13.4			
2	1.00	-17.0	-17.0	-17.0	-17.0	39.41	0.00	0.00
	JOINT NO.	3						
3	0.00	-17.0	-17.0	-17.0	-17.0	6.88	0.00	0.00
	0.05	-14.3	-14.3	-14.3	-14.3			
	0.10	-11.5	-11.5	-11.5	-11.5			
	0.15	-8.8	-8.8	-8.8	-8.8			
	0.20	-6.0	-6.0	-6.0	-6.0			
	0.25	-3.3	-3.3	-3.3	-3.3			
	0.30	-0.5	-0.5	-0.5	-0.5			
	0.35	2.2	2.2	2.2	2.2			
	0.40	5.0	5.0	5.0	5.0			
	0.45	7.7	7.7	7.7	7.7			

93C

	0.50	10.5	10.5	10.5	10.5			
	0.55	6.3	6.3	6.3	6.3			
	0.60	2.1	2.1	2.1	2.1			
	0.65	-2.2	-2.2	-2.2	-2.2			
	0.70	-6.4	-6.4	-6.4	-6.4			
	0.75	-10.6	-10.6	-10.6	-10.6			
	0.80	-14.8	-14.8	-14.8	-14.8			
	0.85	-19.0	-19.0	-19.0	-19.0			
	0.90	-23.2	-23.2	-23.2	-23.2			
	0.95	-27.4	-27.4	-27.4	-27.4			
3	1.00	-31.6	-31.6	-31.6	-31.6	26.42	0.00	0.00
	JOINT NO.	4						
4	0.00	-31.6	-31.6	-31.6	-31.6	19.11	0.00	0.00
	0.05	-24.0	-24.0	-24.0	-24.0			
	0.10	-16.3	-16.3	-16.3	-16.3			
	0.15	-8.7	-8.7	-8.7	-8.7			
	0.20	-1.0	-1.0	-1.0	-1.0			
	0.25	6.6	6.6	6.6	6.6			
	0.30	14.2	14.2	14.2	14.2			
	0.35	21.9	21.9	21.9	21.9			
	0.40	29.5	29.5	29.5	29.5			
	0.45	37.2	37.2	37.2	37.2			
	0.50	44.8	44.8	44.8	44.8			
	0.55	40.3	40.3	40.3	40.3			
	0.60	35.8	35.8	35.8	35.8			
	0.65	31.4	31.4	31.4	31.4			
	0.70	26.9	26.9	26.9	26.9			
	0.75	22.4	22.4	22.4	22.4			
	0.80	17.9	17.9	17.9	17.9			
	0.85	13.4	13.4	13.4	13.4			
	0.90	9.0	9.0	9.0	9.0			
	0.95	4.5	4.5	4.5	4.5			
4	1.00	-0.0	-0.0	-0.0	-0.0	11.20	0.00	0.00
	JOINT NO.	5						
5	0.00	-0.0	-0.0			0.00	0.00	0.00

```
 INPUT DATA FILE NAME OR STOP
STOP
 END OF RUN

**** STOP

OK, SLIST MOMDONE
File in use. MOMDONE (SLIST)
ER! LD

<GROUP4>PHAV0967.02.04 (DALURW), Records= 50, Quota= 50 / 0

Files= 16.

DONE            LOGIN.CPL       MOMDONE         RICK1
RICK2           RICK3           RICK4           RICK5
RICK6           RICK7           RICKOUT         RICKOUT1
RKSOUT4         RKSOUT6         RRRR            USER.AB
OK, SLIST MOMDONE
File in use. MOMDONE (SLIST)
ER!
ED
INPUT
Q

EDIT
Q
FILE MODIFIED, OK TO QUIT? Q
```

```
?

INPUT

EDIT
O
LE MODIFIED, OK TO QUIT? OK
OK, C ALL
OK, S LIST MOMDONE
Not found. LIST (OPENR)

Program halt at 2000(3)/1.
ER!
SLIST MOMDONE
File in use. MOMDONE (SLIST)
ER! SLIST MOMDONE
File in use. MOMDONE (SLIST)
ER! C ALL
OK, S
File in use. MOMDONE (SLIST)
ER! LD

<GROUP4>PHAV0967.02.04 (DALURW), Records= 51, Quota= 51 / 0

Files= 16.

DONE            LOGIN.CPL       MOMDONE         RICK1
RICK2           RICK3           RICK4           RICK5
RICK6           RICK7           RICKOUT         RICKOUT1
RKSOUT4         RKSOUT6         RRRR            USER.AB
OK, ED MOMDONE
File in use. MOMDONE (OPENR)
ER! LD

<GROUP4>PHAV0967.02.04 (DALURW), Records= 51, Quota= 51 / 0

Files= 16.

DONE            LOGIN.CPL       MOMDONE         RICK1
RICK2           RICK3           RICK4           RICK5
RICK6           RICK7           RICKOUT         RICKOUT1
RKSOUT4         RKSOUT6         RRRR            USER.AB
OK, COMO -E
OK,
```

REVISION OF SECTION 206
STRUCTURE EXCAVATION AND BACKFILL
29th AVENUE BRIDGE OVER A.C.D.C.

Section 506 of the Uniform Standard Specifications is hereby revised as follows:

Add the following to subsection 206.4:

Structure backfill in back of the abutments shall not be placed until the concrete slab has been in place a minimum of seven days. The abutments shall be backfill simultaneously.

Add the following to subsection 206.5:

Structure excavation and backfill shall be paid for at the contract unit price per cu. yds.

REVISION OF SECTION 350
REMOVAL OF EXISTING IMPROVEMENTS
TEMPORARY DETOUR BRIDGE

Section 350 of the Uniform Standard Specifications is hereby revised as follows:

Add the following to subsection 350.1:

This work shall consist of removing the temporary detour bridge at the completion of the project. It shall also include the salvaging of designated materials, including ten precast prestressed box beams and 160 feet of temporary concrete median barriers, and backfilling the resulting trenches, holes, and pits.

Add the following to subsection 350.2:

The Contractor shall state, before construction begins, the method of removal and salvaging he intends to furnish.

The Contractor shall remove the temporary detour bridge a minimum of 2 feet below the finished ground line.

All salvable material shown on the plans, shall be stored by the Contractor as directed within the project limits.

Cavities left by structure removal shall be filled to the level of the surrounding ground and shall be compacted as designated.

Unless otherwise directed, the temporary detour bridge will not be removed until the 29th Avenue Bridge is in place and accommodating traffic.

Add the following to subsection 350.4:

Payment for removal shall be made at the contract unit price per lump sum.

REVISION OF SECTION 350
REMOVAL OF EXISTING IMPROVEMENTS
29th AVENUE OVER A.C.D.C.

Section 350 of the Uniform Standard Specifications is hereby revised as follows:

Add the following to subsection 350.1:

This work shall consist of removing the existing concrete box culvert and wingwalls as shown on the plans. Utilities will be removed and relocated by the utility companies. The Contractor shall coordinate his removal work with the utility companies.

Add the following to subsection 350.2:

The Contractor shall state, before construction begins, the method of removal he intends to furnish.

Unless otherwise directed, the existing concrete box culvert and wingwalls shall not be removed until the detour is in place and accommodating traffic.

The existing concrete box culvert and wingwalls shall be completely removed.

Add the following to subsection 350.4:

Payment for removal will be made at the contract unit price per lump sum.

REVISION OF SECTION 506
PRECAST PRESTRESS CONCRETE MEMBERS
TEMPORARY DETOUR BRIDGE

Section 506 of the Uniform Standard Specifications is hereby revised as follows:

Add the following to subsection 506.1:

The plans provide for the erection of ten precast prestressed box beams on the temporary detour bridge. These beams have already been fabricated and are the property of the Flood Control District of Maricopa County. The Contractor shall be held responsible for the safekeeping of the beams during the period of the contract.

Add the following to subsection 506.10:

Payment for erection of precast prestressed box beams shall be made of the contract unit price per lump sum.

REVISION OF SECTION 506
PRECAST PRESTRESSED CONCRETE MEMBERS
29th AVENUE BRIDGE OVER A.C.D.C.

Section 506 of the Uniform Standard Specifications is hereby revised as follows:

Add the following to subsection 506.1:

The plans provide for alternate prestressed concrete girder designs. Alternate 1 designates a pretensioned concrete girder and Alternate 2 designates a post-tensioned concrete girder. Both alternates are precast prestressed concrete girders and shall be fabricated and installed in accordance with the plans and section 506 of the Uniform Standard Specifications.

Add the following to subsection 506.10:

The Contractor shall bid and use Alternate 1 girders <u>or</u> bid and use Alternate 2 girders.

Payment will be made at the contract unit price per each.

REVISION OF SECTION 515
STEEL STRUCTURES
29th AVENUE OVER A.C.D.C.
AND
TEMPORARY DETOUR BRIDGE

Section 515 of the Uniform Standard Specifications is hereby revised as follows:

Add the following to subsection 515.1:

This work shall consist of fabricating and erecting miscellaneous steel items on the project incuding the pipe hanger assembly, girder bearing assembly and threaded inserts on the 29th Avenue Bridge and the 3/8"x3"x3" angle on the temporary detour bridge.

Delete subsection 515.7 and add the following:

Payment for miscellaneous steel items shall not be paid for separately but will be included in the work.

Pier Structure Ex.	6868 yd^3	$3	$20,604 ✓
" " Backfill	55 yd^3	$6	330 ✓
Pier Class A Concrete	107 yd^3	$190	20,330 ✓
Pier Rebar	13154 #	$0.30	3,946 ✓
Type II Precast Girders 16×55'	880 L.F.	$60	52,800 ✓
			~~$130,206~~
			98,010.

TYPE VI Precast Girders I × 114'	798 LF	$95	$75,810 ✓
Add ½" concrete to deck	10.2 yd^3	$200	2040 ✓
Add 1' concrete to abut. ftg.	47 yd^3	$190	8930 ✓
Add 6" concrete to back of Abutmnt	56 yd^3	$190	10,640 ✓
Add Rebar	14,700 #	$0.30	4410 ✓
			101,830 ✓

DMJM
March 22, 1985

COST ESTIMATE
29TH AVENUE BRIDGE

ALTERNATE 1 GIRDER

No.	Item	Unit	Quantity	Price	Amount
206	Structure Excavation	cu yds	16,355	3.34	54,625.70
206	Structure Backfill	cu yds	11,136	7.88	87,751.68
350	Removal of Existing Improvements	lump	1	5,000.00	5,000.00
505	Class A Concrete - Bridge	cu yds	537	225.00	120,825.00
505	Clas A Concrete - Approach Slabs	cu yds	118	200.00	23,600.00
505	Class AA Concrete	cu yds	232	270.00	62,640.00
505	Reinforcing Steel	lbs	141,084	0.45	63,487.80
506	Precast Prestress Conc. Unit (Type II)	ea	16	3,500.00	56,000.00
520	Type H-3-1 Bridge Rail	lin ft	226.5	60.00	13,590.00
	TOTAL				$487,520.18

ALTERNATE 2 GIRDER

No.	Item	Unit	Quantity	Price	Amount
206	Structure Excavation	cu yds	16,355	3.34	54,625.70
206	Structure Backfill	cu yds	11,136	7.88	87,751.68
350	Removal of Existing Improvements	lump	1	5,000.00	5,000.00
505	Class A Concrete - Bridge	cu yds	537	225.00	120,825.00
505	Class A Concrete - Approach Slabs	cu yds	118	200.00	23,600.00
505	Class AA Concrete	cu yds	232	270.00	62,640.00
505	Reinforcing Steel	lbs	131,983	0.45	59,392.35
506	Precast Prestress Conc. Unit (Type II)	ea	16	4,300.00	68,800.00
520	Type H-3-1 Bridge Rail	lin ft	226.5	60.00	13,590.00
	TOTAL				$496,224.73

TEMPORARY DETOUR BRIDGE

No.	Item	Unit	Quantity	Price	Amount
350	Removal of Existing Improvements	lump	1	4,000.00	4,000.00
505	Class A Concrete	cu yds	90	225.00	20,250.00
505	Reinforcing Steel	lbs	9,870	0.45	4,441.50
	TOTAL				$28,691.50

51/dw3

DMJM	PROJECT: 29TH AVE BRIDGE	PROJECT NO:		PAGE
		BY: RKS	DATE: 3/12/85	102
SUBJECT: QUANTITIES ABUT 1		BAS	1/2/86	

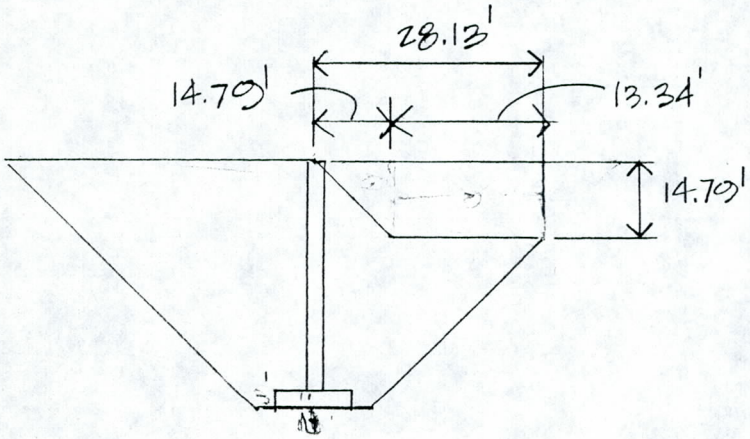

1. FOOTING $11(58.06)\frac{3}{27} = 70.96\ YD^3$

2. WALL $2.5(58.06)\frac{33.42}{27} = 179.66\ YD^3$

3. VOID AREA.

$A = 306.23\ \phi \quad V = 306.23(\frac{60.06}{27}) = 681.19\ YD^3$

$A = 14.79^2(.5) = 109.37\ \phi$

$V = 109.37(13.34 + .5(14.79))\frac{2}{27} = 167.99\ YD^3$

$V = 5931 - 1100 = 4831.\ YD^3$

DMJM	PROJECT: 20TH AVE BRIDGE	PROJECT NO:		PAGE
		BY: RKS	DATE: 3/12/85	103
SUBJECT: QUANTITIES		BAS	1/2/86	

PIER 2

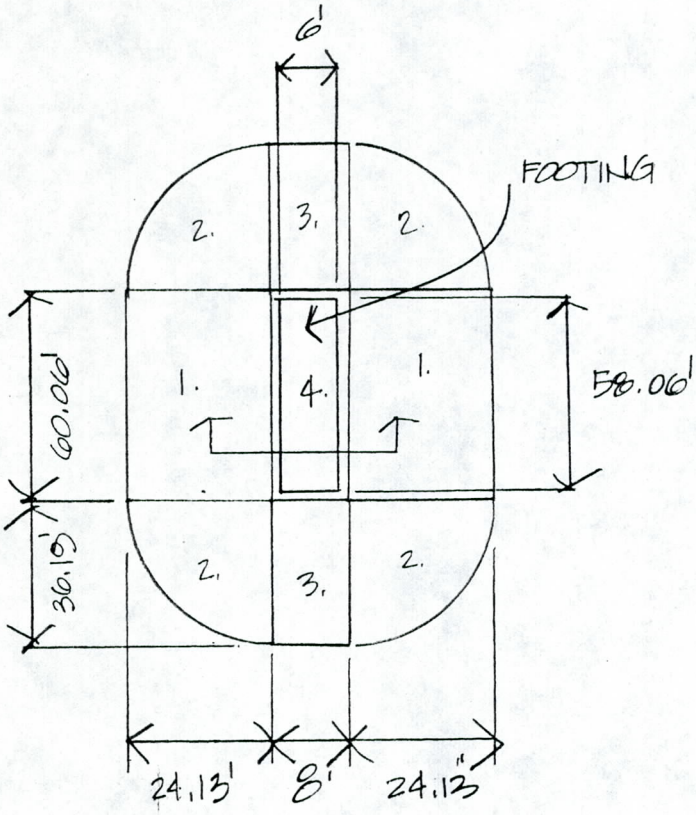

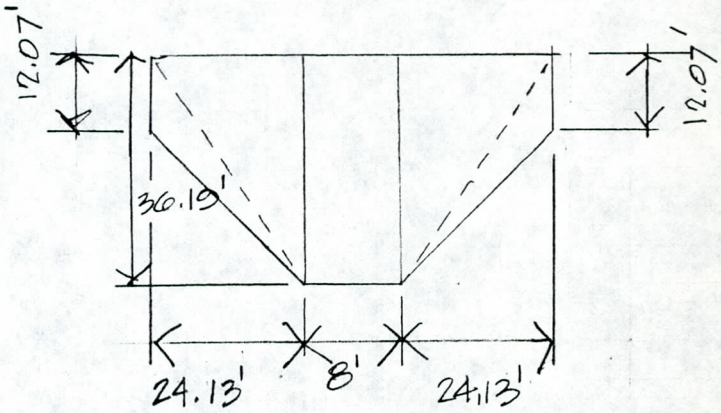

1. $A = 36.19^2(.5) = 654.86\ \phi$ / $V = 654.86\left(\frac{60.06}{27}\right) = 1456.70\ YD^3 * 2 = \underline{2913.39\ YD^3}$ /

2. $r_{avg} = 30.16'$

$V = \frac{.25}{3}\pi(30.16)^2\ \frac{36.19}{27} = 319.20\ YD^3 * 4 = \underline{1,276.78\ YD^3}$ /

3. $A = 654.86\ \phi$ $V = 654.86\left(\frac{.8}{27}\right) = 194.03\ YD^3 * 2 = \underline{388.07\ YD^3}$ /

4. $V = 8(36.19)\frac{60.06}{27} = \underline{644.02\ YD^3}$ /

$V = 5,222\ YD^3$ /

DMJM	PROJECT: 20TH AVE BRIDGE	PROJECT NO:		PAGE
		BY: RKS	DATE: 3/12/85	104
SUBJECT: QUANTITIES PIER 2		BAS	1/2/86	

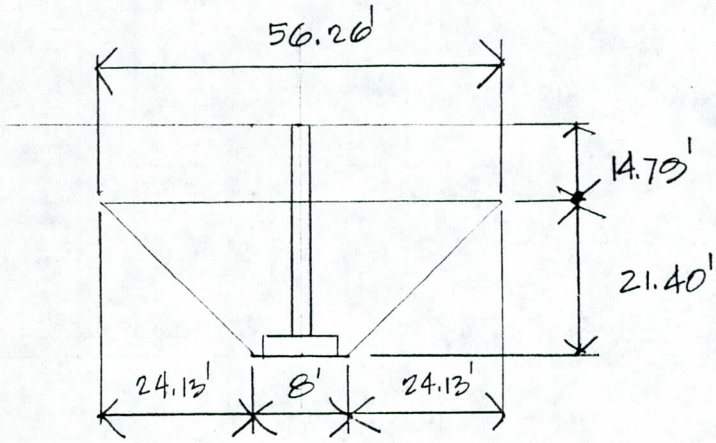

1. $A = 24.13(21.40)(.5) = 258.19\,\square'$ $V = 258.19\left(\frac{60.06}{27}\right) = 574.33\ YD^3 * 2 = \underline{1,148.66\ YD^3}$

2. $r_{AVG} = 22.77'$
$V = .25\left(\frac{\pi}{3}\right) 22.77^2 \left(\frac{21.40}{27}\right) = 107.54\ YD^3 * 4 = \underline{430.14\ YD^3}$

3. $V = 8(21.40)\frac{60.06}{27} = \underline{380.82\ YD^3}$

4. $A = 258.19\,\square'$ $V = 258.19\left(\frac{8}{27}\right) = 112.84\ YD^3 * 2 = \underline{225.67\ YD^3}$

5. $V = 6(3)\frac{58.06}{27} = \underline{-38.71\ YD^3}$

6. $V = 2(58.06)\frac{18.40}{27} = \underline{-79.13\ YD^3}$

$V = 2,067.45\ YD^3$

DMJM	PROJECT: 20TH AVE BRIDGE	PROJECT NO:		PAGE
		BY: RKS	DATE: 3/12/85	105
SUBJECT: QUANTITIES		BAS	1/2/86	

ABUT. 3.

1. $33.96^2(.5) = 576.64\,\square$ ✓ $V = 576.64\left(\frac{60.06}{27}\right) = \underline{1{,}282.71\ YD^3}$ ✓

2. $V = \frac{.25\pi}{3}(33.96)^2\,\frac{33.96}{27} = 379.76\ YD^3 * 2 = \underline{759.52\ YD^3}$ ✓

3. $A = 576.64\,\square$ $V = 576.64\left(\frac{13}{27}\right) = 277.64\ YD^3 * 2 = \underline{555.28\ YD^3}$ ✓

4. $r_{avg} = 27.79'$

$V = \frac{.25\pi}{3}(27.79)^2\,\frac{33.96}{27} = 254.35\ YD^3 * 2 = \underline{508.70\ YD^3}$ ✓

5. $A = (21.63^2(.5)) + 21.63(12.33) = 500.63\,\square$ ✓

$V = 500.63\left(\frac{60.06}{27}\right) = \underline{1{,}113.62\ YD^3}$ ✓

6. $V = 13(60.06)\,\frac{33.96}{27} = \underline{982.05\ YD^3}$ ✓

$V = 5{,}202.\ YD^3$ ✓

1. FOOTING $\underline{70.96\ YD^3}$
2. WALL $2.5(58.06)\,\frac{30.96}{27} = \underline{166.44\ YD^3}$ ✓
3. VOID AREA $A = 270.83\,\square$

$V = 270.83(60.06)/27 = \underline{602.44\ YD^3}$ ✓

$A = 12.33^2(.5) = 76.01\,\square$ ✓

$V = 76.01\left(\frac{21.97}{27}\right) = 61.84\ YD^3 \times 2 = \underline{123.67\ YD^3}$ ✓

$V = 5202. - 964. = 4{,}238\ YD^3$ ✓

DMJM	PROJECT: 29TH AVE BRIDGE	PROJECT NO:		PAGE
		BY: RKS	DATE: 3/12/85	106
SUBJECT: QUANTITIES		BAS	1/2/86	

ABUT 1.

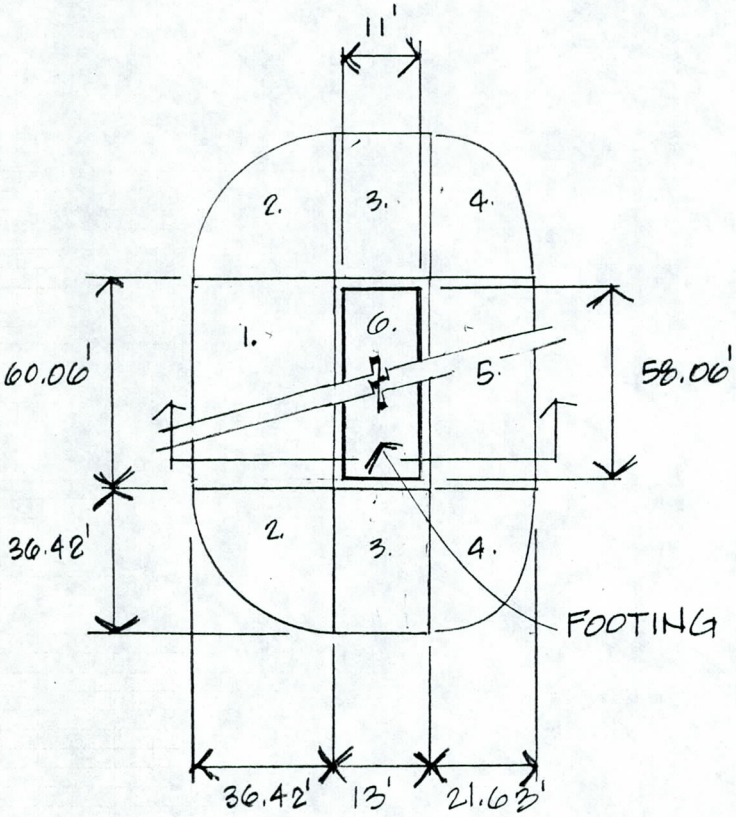

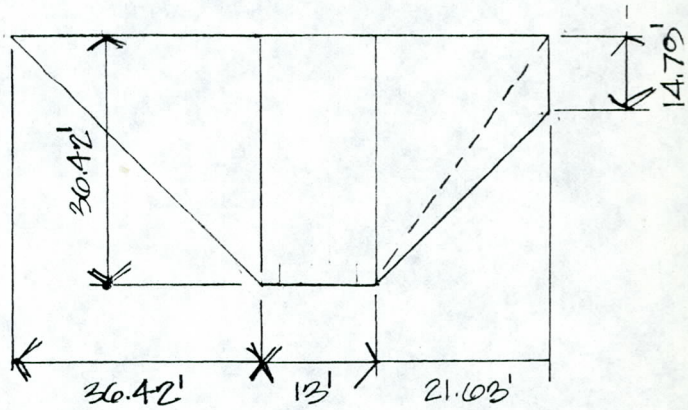

1. $A = 36.42^2 * .5 = 663.21\ \square$ $V = 663.21 \frac{(60.06)}{27} = \underline{1{,}475.27\ YD^3}$

2. $V = .25(\frac{1}{3}\pi r^2 h) = \frac{.25}{3}\pi\ 36.42^2\ \frac{36.42}{27} = 468.41\ YD^3 * 2 = \underline{936.82\ YD^3}$

3. $A = 663.21\ \square$ $V = 663.21 \frac{(13)}{27} = 319.32\ YD^3 * 2 = \underline{638.65\ YD^3}$

4. $r_{AVG} = 29.03'$

$V = .25(\frac{1}{3}\pi r^2 h)$

$V = \frac{(.25)}{3}\pi(29.03)^2\frac{(36.42)}{27} = 297.60\ YD^3 * 2 = \underline{595.21\ YD^3}$

5. $A = (21.63^2 * .5) + 21.63(14.79) = 553.84\ \square$

$V = 553.84 \frac{(60.06)}{27} = \underline{1{,}231.08\ YD^3}$

6. $V = 13(60.06)\frac{36.42}{27} = \underline{1{,}053.19\ YD^3}$

$V = 5931\ YD^3$

DMJM	PROJECT	PROJECT NO:		PAGE
		BY: AMR	DATE: 2/13/85	107

SUBJECT STRUCTURAL EXCAVATION – ABUTMENT 1 BAS 1/2/86

ABUTMENT 1

$V = \frac{1}{3}\pi r^2 h \quad r = 37.0533 \quad h =$

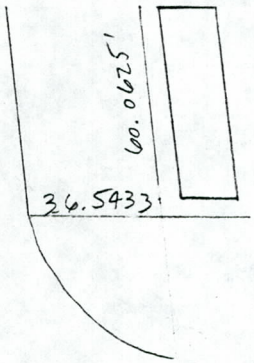

$$V = \frac{\frac{1}{3}\pi (36.5433)^2 (36.5433)}{2}$$

$$= \frac{25,551.8243}{27} = 946.3639 \text{ cy } \tfrac{1}{2} \text{ cone} \quad +$$

$A = \frac{1}{2} b h \quad b = 37.0533 \quad h = 36.5433$

$$= \frac{36.5433}{2} \times 36.5433 \times 60.0625$$

$$= \frac{40,104.1149}{27} = 1485.3376 \text{ cy} \quad +$$

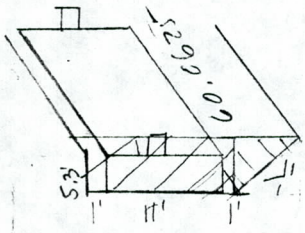

$$\frac{(5.3)(60.0625)(13)}{27} = 153.2706 \text{ cy} \quad +$$

$A = \frac{1}{2} b h \quad b = 5.3' \quad h = 5.3'$

$$\frac{\frac{5.3}{2} \times 5.3 \times 60.0625}{27} = 31.2436 \text{ cy} \quad +$$

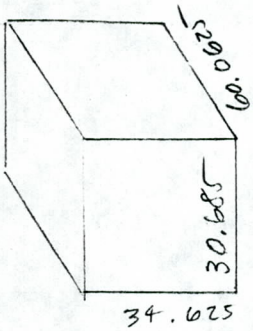

$$\frac{(34.625)(30.685)(60.0625)}{27} = 2363.4997 \text{ cy} \quad +$$

$$\frac{\left(\frac{16.325^2}{2}\right)(60.0625)}{27} = 296.43 \text{ cy} \quad -$$

$$\frac{\left(\frac{36.5433}{2}\right)^2 13(2)}{27} = 642.98 \text{ cy}$$

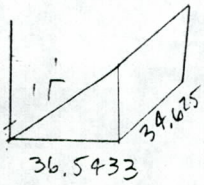

$$\frac{\frac{36.5433}{2} \times 36.5433 \times 34.625}{27} = 856.2716 \times 2$$

$$= 1712.5432 \text{ cy} \quad +$$

ABUTMENT 1 TOTAL 6692.2536 cy

DMJM	PROJECT	PROJECT NO:		PAGE
		BY: AMTR	DATE: 2/13/87	108

SUBJECT STRUCTURAL EXCAVATION - PIER 2 BAS 1/2/86

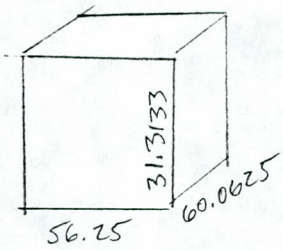

$$\frac{(31.3133)(56.25)(60.0625)}{27} = 3918.2398 \text{ cy}$$ +

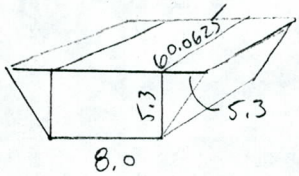

$$\frac{(60.0625)(5.3)(8)}{27} = 94.3204 \text{ cy}$$ +

$$\frac{\frac{5.3}{2} \times 5.3 \times 60.0625}{27} = 31.2436 \times 2$$

$$= 62.4872 \text{ cy}$$ +

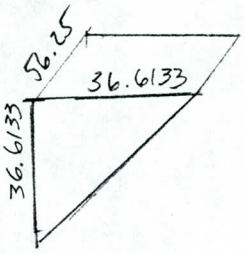

$$\frac{\frac{36.6133}{2} \times 36.6133 \times 56.25}{27} = 1396.3893 \times 2$$

$$= 2792.7786 \text{ cy}$$ +

PIER 2 TOTAL 6867.8260 cy

DMJM	PROJECT	PROJECT NO:		PAGE
		BY: AMR	DATE: 2/13/85	109
SUBJECT	STRUCTURAL EXCAVATION – ABUTMENT 3	BAS 1/2/85		

ABUTMENT 3

$V = \frac{1}{3}\pi r^2 h \quad r = 34.4583 \quad h = 34.4583$

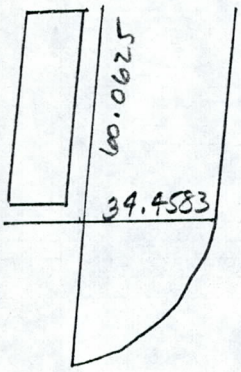

$V = \frac{\frac{1}{3}\pi (34.4583)^2 (34.4583)}{2}$

$= \frac{21,422.9940}{27} = 793.4442$ cy ✓ $\frac{1}{2}$ CONE +

$A = \frac{1}{2} bh \quad b = 34.4583 \quad h = 34.4583$

$= \frac{34.4583}{2}(34.4583)(60.0625)$

$= \frac{35,658.3386}{27} = 1320.6792$ cy ✓ +

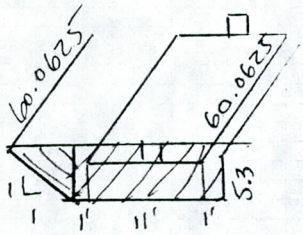

$\frac{(5.3)(60.0625)(13)}{27} = 153.2706$ cy ✓ +

$A = \frac{1}{2} bh \quad b = 5.3' \quad h = 5.3'$

$\frac{\frac{5.3}{2} \times 5.3 \times 60.0625}{27} = 31.2436$ cy ✓ +

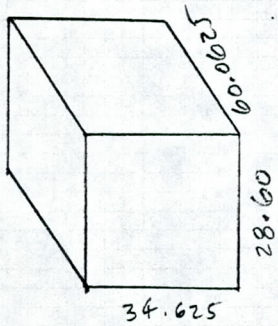

$\frac{(60.0625)(28.60)(34.625)}{27} = 2202.9034$ cy ✓ +

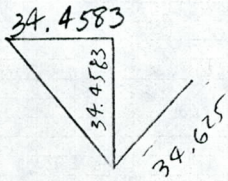

$\frac{\frac{34.4583}{2} \times 34.4583 \times 34.625}{27} = 761.3489 \times 2$

$= 1522.6978$ cy ✓ +

✓ ABUTMENT 3 TOTAL 6024.2388 cy

DMJM	PROJECT	PROJECT NO:		PAGE
		BY: AMR	DATE: 2/13/85	140

SUBJECT STRUCTURAL BACKFILL – ABUTMENT 1 BAS 1/2/86

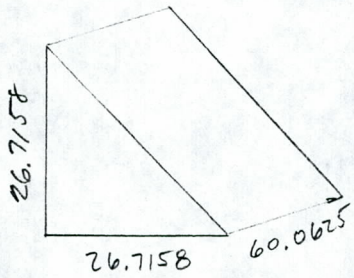

$$\frac{\frac{26.7158}{2} \times 26.7158 \times 60.0625}{27} = 793.8638 \text{ cy} \checkmark \quad +$$

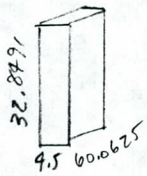

$$\frac{(32.8491)(4.5)(60.0625)}{27} = 328.8335 \text{ cy} \checkmark \quad +$$

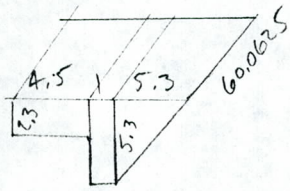

$$\frac{(4.5)(2.3)(60.0625)}{27} = 23.024 \text{ cy} \checkmark \quad +$$

$$\frac{(1)(5.3)(60.0625)}{27} = 11.79 \text{ cy} \checkmark \quad +$$

$$\frac{\frac{5.3}{2} \times 5.3 \times 60.0625}{27} = 31.2436 \text{ cy} \checkmark \quad +$$

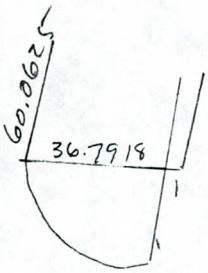

LOWER

$$\frac{(36.4533)(1)(60.0625)}{27} = 81.0917 \text{ cy} \checkmark \quad +$$

$$\frac{\frac{1}{3}\pi (36.7918)^2 (36.7918)}{2} =$$

$$\frac{26{,}076.6459}{27} = 965.8017 \text{ cy } 1/2 \text{ CONE} \checkmark \quad +$$

$$\frac{1/3\ \pi\ (34.4533)^2 (34.4533)}{2} =$$

$$\frac{21{,}413.6697}{27} = 793.0989 \text{ cy } 1/2 \text{ CONE} \checkmark \quad +$$

ABUTMENT 1 TOTAL 3028.7472 cy. ✓

DMJM	PROJECT	PROJECT NO:	PAGE
		BY: AMR DATE: 2/13/85	111
SUBJECT STRUCTURAL BACKFILL - PIER 2		BAS 1/2/86	

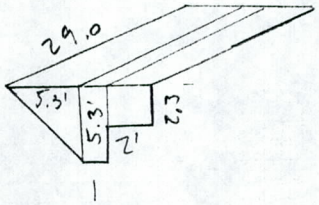

$$\frac{\frac{5.3}{2} \times 5.3 \times 29.0}{27}$$

$= 2 \times 15.0854 = 30.1707$ cy ✓ +

$\frac{(5.3)(1)(29.0)}{27} = 5.6926 \times 2 = 11.3852$ cy ✓ +

$\frac{(29.0)(2)(2.3)}{27} = 4.9407 \times 2 = 9.8815$ cy ✓ +

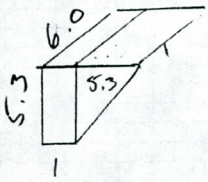

$\frac{(5.3)(6.0)(1)}{27} = 1.1778 \times 2 = 2.3556$ cy ✓ +

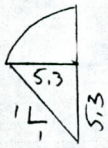

$V = \frac{1}{3} \pi r^2 h \quad r = 3.5 \quad h = 3.5$

$= \frac{\frac{1}{3} \pi (3.5)^2 (3.5)}{27} = 1.6629$ cy ✓ +
FOUR CORNERS

PIER 2 TOTAL 55.4559 cy ✓

DMJM	PROJECT	PROJECT NO:		PAGE
		BY: AMR	DATE: 2/14/85	112

SUBJECT STRUCTURAL BACKFILL - ABUTMENT 3 BAS 1/2/86

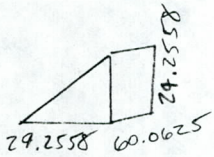

$$\frac{\frac{24.2558}{2}(60.0625)(24.2558)}{27} = 654.3963 \text{ cy} \quad +$$

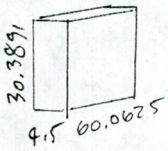

$$\frac{(30.3891)(4.5)(60.0625)}{27} = 304.2076 \text{ cy} \quad +$$

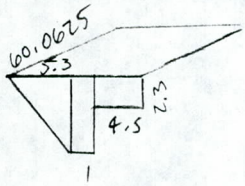

$$\frac{(4.5)(2.3)(60.0625)}{27} = 23.0240 \text{ cy} \quad +$$

$$\frac{(1)(5.3)(60.0625)}{27} = 11.79 \text{ cy} \quad +$$

$$\frac{\frac{5.3}{2} \times 5.3 \times 60.0625}{27} = 31.2436 \text{ cy} \quad +$$

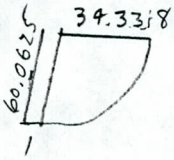

LOWER $\frac{(33.3851)(1)(60.0625)}{27} = 74.2664 \text{ cy} \quad +$

$$\frac{\frac{1}{3}\pi(34.3318)^2(34.3318)}{2}$$

$$\cancel{\frac{20,232.9741}{27}} = \cancel{749.3694} \; 784.74 \text{ cy, } \tfrac{1}{2} \text{ CONE} \quad +$$

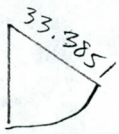

$$\frac{\frac{1}{3}\pi(33.3851)^2(33.3851)}{2}$$

$$\frac{19,483.0375}{27} = 721.5940 \text{ cy} \quad +$$

2605.26 CY

ABUTMENT 3 TOTAL ~~2569.8913~~ cy

DMJM	PROJECT 29th Ave	PROJECT NO:		PAGE
		BY: GIS	DATE: 2/12/85	113
SUBJECT Quantities		BAS	1/2/86	

Channel Lining - Class A Concrete

Volume = (10/12)(58)(54) × 2 / 27 = 193.33 cu. yds

TAKE OUT, RKS 3-11-85

Approach Slabs - Class A Concrete

Slab:

Volume = (1)(24)(58) × 2 / 27 = 103.11 cu. yds

Dado:

Volume = [(1.125)(3.25)(24) + (1.125)(4)(24)] 2/27 = 14.5 cu. yds.

117.61 cu. yds.

Railing

Length = 113'-3" × 2 = 226.5'

Type II Girders

Number = 8 × 2 = 16

✓ GIS

DMJM	PROJECT: 29th Ave	PROJECT NO: 4252-01-05	PAGE 114
		BY: CRK / DATE: 2/13/85	

SUBJECT: QUANTITIES - SUPERSTRUCTURE Class BAS AA 1/2/BC Concrete

SLAB

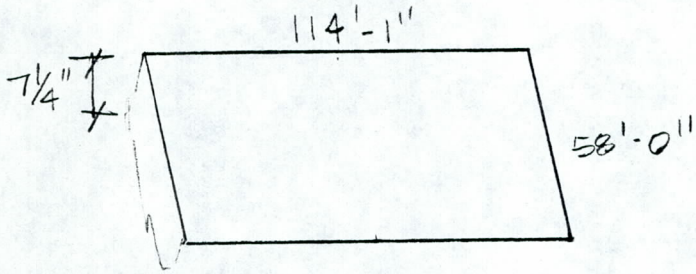

A = 6616.83 FT.²
× .60 THICKNESS
3997.67 FT.³ / 27 = 148.06 YD.³

DIAPHRAGMS

Length = 58 − 2×2.75 − (.5×7) = 49'
(width, overhang, Girder webs)

PIER

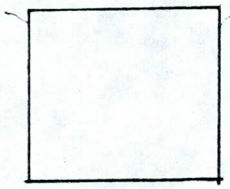

A = 9.24 FT.²
× 49' LENGTH
452.76 / 27 = 16.77 YD.³

(2) ABUTS.

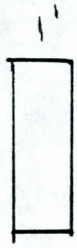

A = 3.08 FT.²
× 49 LENGTH
150.92 / 27 = 5.59 × 2 (ABUTS) = 11.18 YD.³

(2) INTERM.

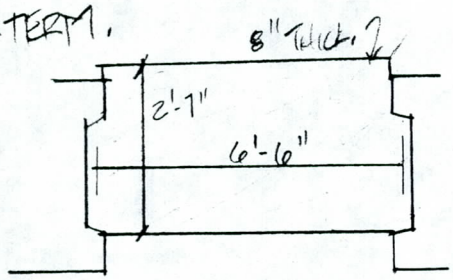

A = 2.58 × 6.5 = 16.77 FT.²
× .668
11.2 FT.³
× 7
78.4 / 27 = 2.90 YD.³
× 2 (INTERM)
5.81 YD.³

Girder Haunches = (1/12)(1)(114.083)(8)/27
+ (1/12)(2.25)(1/2) × 2 × 114.083/27 = 3.61

✓ GIS

CRK 2/13/85
BAS 1/2/86

QUANT. - SUPERSTR.

CURB

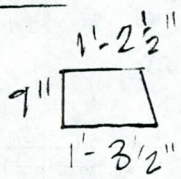

A = 1.25 × .75' = .9375 FT.²

× 114.08 LENGTH

106.95 FT.³/27 = 3.96 YD.³ ✓

SIDEWALK

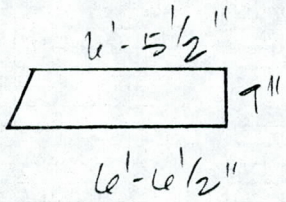

A = 6.6 × .75 = 4.95 FT.²

× 114.08 LENGTH

564.7 FT.³/27 = 20.91 YD.³ ✓

BLOCKOUT (SUBTRACT)

A = 1.5 × 1.5 (8/12 + 3 + 8/12 + 1 × 2)/27 = .53 CU. YDS ✓

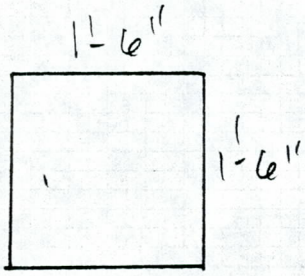

50)

210.30 YD.³

.53 YD.³ (BLOCKOUT)

209.77 YD.³ ✓

TOT. CONCR. ⇒ 210 CU. YDS ✓

DMJM	PROJECT: 29th Ave	PROJECT NO:		PAGE
		BY: GIS	DATE: 2/12/85	116
SUBJECT: Quantities - Abut 1		BAS	1/2/86	

Concrete

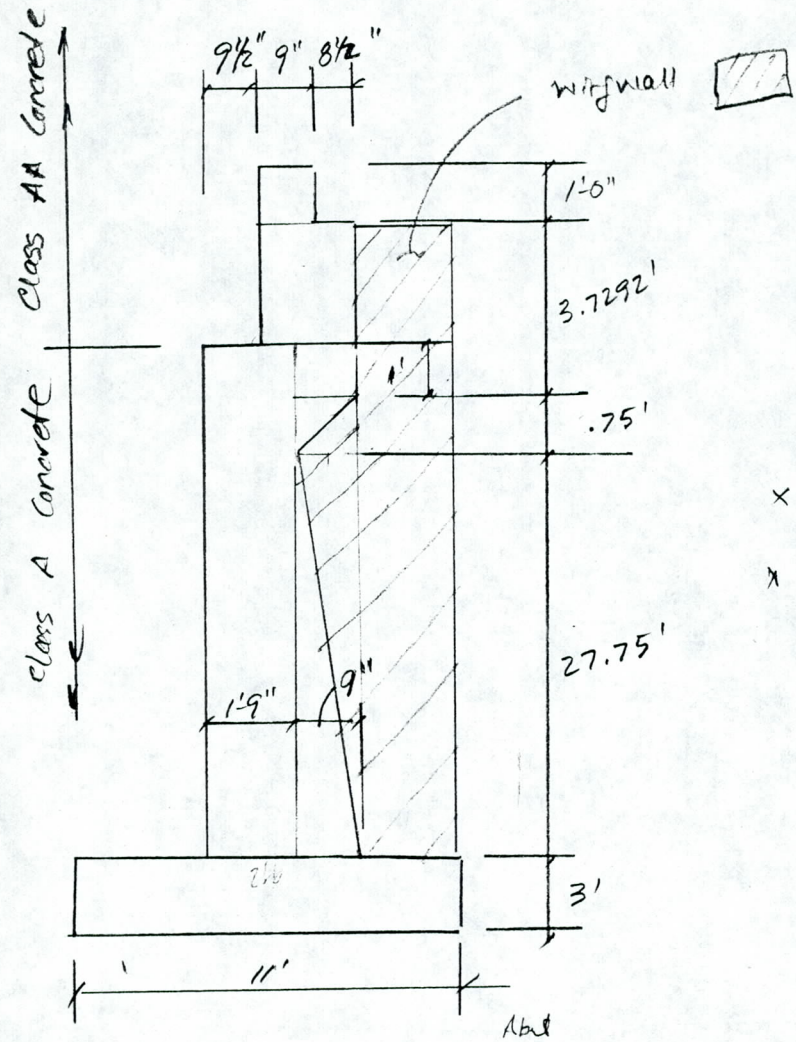

× 58'-0 7/8" Abut wall

× 1'-3½" wingwall

Class A = [(1)(3) + (1.75)(29.5) + (½)(.75)(27.75) + (½)(.75)² + (1)(.75)] 58.0729/27

+ [(½)(.75)(27.75) + (½)(.75)² + (4.25)(29.5)] 1.2917 × 2/27

= 219.63 cu. yds

Class AA 11.28 cu. yds (see Abut. 3)

DMJM	PROJECT: 29th Ave	PROJECT NO:		PAGE
		BY: AMR	DATE: 2-14-85	117
SUBJECT: PIER 2 Class A Concrete		BAS	1/2/86	

PIER CAP

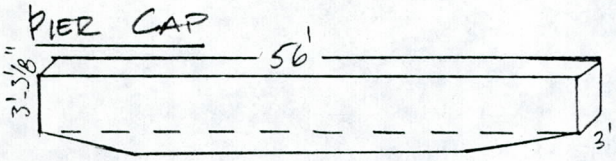

$$\frac{(56)(3)(3.2917)}{27} = 20.4817 \text{ cy} \checkmark \quad +$$

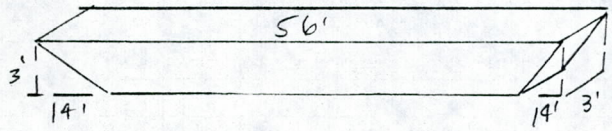

$$\frac{(56)(3)(3)}{27} = 18.6667 \text{ cy} \checkmark$$

$$\frac{(7)(3)(3)}{27} = -2.3333 \text{ cy} \checkmark$$

$$= 16.3334 \text{ cy} \checkmark \quad +$$

PIER CAP = 36.8151 cy ✓ TOTAL

PIER WALL

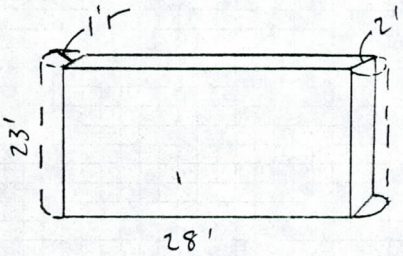

$$\square' = \frac{(3.1416)(1^2)(29)}{27} = 3.3743 \text{ cy} \checkmark \quad +$$

$$\frac{(23)(2)(28)}{27} = 47.7037 \text{ cy} \checkmark \quad +$$

$$= 51.0780 \text{ cy} \checkmark \text{ TOTAL}$$

PIER FOOTER

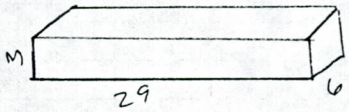

$$\frac{(3)(29)(6)}{27} = 19.333 \text{ cy} \checkmark \text{ TOTAL}$$

GLS ✓ 107.2264 PIER 2 TOTAL

DMJM	PROJECT: 29th Ave	PROJECT NO:		PAGE
		BY: GIS	DATE: 2/12/85	118
SUBJECT: Quantities - Abut. 3		BAS	1/2/86	

Concrete

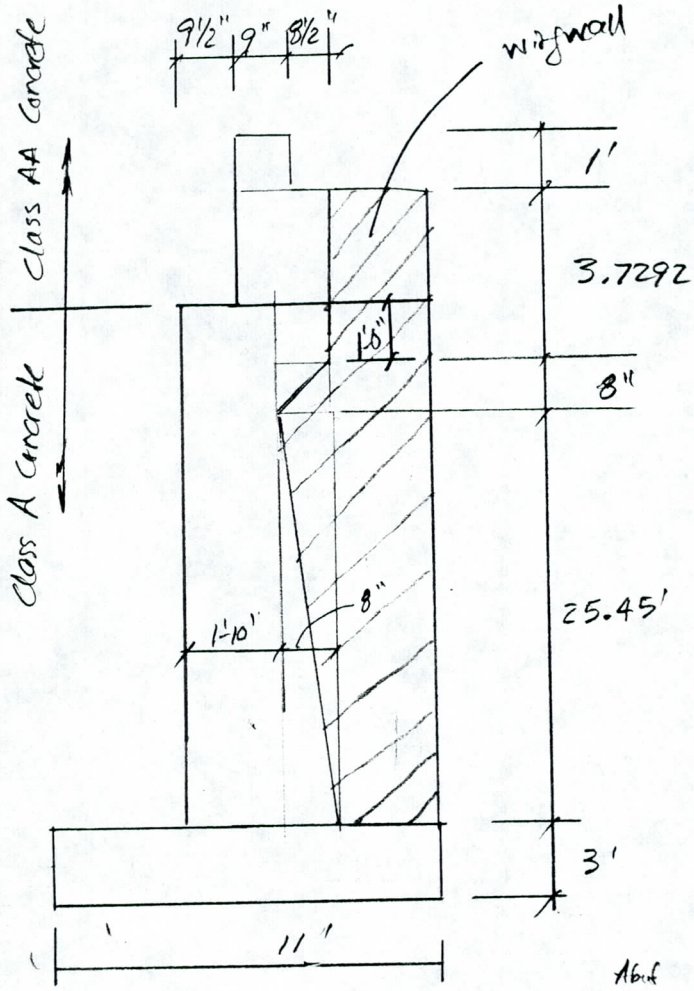

× 58'-0⅞" Abut. wall

× 1'3½" wingwall

Abut

Class A = $[(11)(3) + (1.833)(27.1167) + (1/2)(8/12)(25.45) + (1/2)(8/12)^2 + (1)(8/12)]\,58.0729/27$

wings

$+ [(1/2)(8/12)(25.45) + (1/2)(8/12)^2 + (4.25)(27.1167)]\,2 \times 1.2917/27$

= 209.92 cu. yds ✓

Class AA = $[(1.4583)(2.7292) + (.75)(1)]\,58.0729/27 + (2.7292)(4.25)(1.2917) \times 2/27$

= 11.28 cu. yds ✓

DMJM	PROJECT 29th Ave	PROJECT NO:		PAGE
		BY: GLS	DATE: 2/13/85	119
SUBJECT Quantities		BAS 1/2/86		

1/2" Expansion Jt. Material

Pier 2

Area = (8/12)(56) x 2 = 74.67 sq. ft ✓

Abut 1 = Abut 3

Area = 3 x 58'-0 7/8" (wall) + (1)(58'-0 7/8) (seat) = 232 sq. ft ✓

Approach Slabs

Area = (1)(58) x 2 = 116 sq ft ✓

✓ GIS
SLAB

REINFORCING STEEL BAR LIST SUPERSTRUCTURE

#4	#5	#6	#7	#8	#9	#10	#11
0.668	1.043	1.502	2.044	2.670	3.400	4.303	5.313

MARK	Size		No. of Bars	Type	Total Weight	Comments
	Bar No.	Length				
	4	113'-9"	59		4483	TOP LONG.
	6	7'-0"	118	6' 7'-0	1241	TOP LONG. HOOK
	6	30'-0"	116		5227	TOP LONG. PIERS (NOT [illegible])
	5	113'-9"	62		7356	BOTT. LONG
	5	57'-9"	208		12529.	TOP TRANSV.
	5	57'-9"	208		12529.	BOTT TRANSV.

TOTAL SLAB = 43364 + 2% for SPLICES = 44231

By: CRK Date 2/13/85	Job No. 4252-01-05	Sheet of
Chk'd: GIS Date 2/13/85	Structure No. 29# Ave	Superstructure

REINFORCING STEEL BAR LIST

#4	#5	#6	#7	#8	#9	#10	#11
0.668	1.043	1.502	2.044	2.670	3.400	4.303	5.313

MARK	Size: Bar No.	Size: Length	No. of Bars	Type	Total Weight	Comments
Pier	4	9'-9 1/2"	56		571.91	TIES
	8	4'	12		128.16	TRU GIRDERS @ EDGES
	4	6'-8"	42		187.05	INSIDE TIES
	4	57'-8"	1		38.52	CONT.
Abut 1	4	7'-9 1/2"	56		291.41	TIES
	8	4'	6		64.08	TRU GIRD. @ EDGES
	4	6'-8"	56		249.40	INSIDE TIES
Abut 2	4	7'-9 1/2"	56		291.41	TIES
	8	4'	6		64.08	TRU GIRD. @ EDGES
	4	6'-8"	56		249.40	INSIDE TIES
Intermediate	4	6'-8"	~~49~~ 98		436.43	TIES
	9	5'-8"	~~7~~ 14		269.73	BOT.
	4	6'-8"	~~28~~ 56 42 84		374.10	INSIDE TIES
	8	4'	~~6~~ 12		128.16	TRU GIRDERS

TOTAL DISPLACEMENT 3344 #

By: CRK Date 12/13/85	Job No. 4252-01-05	Sheet of
Chk'd: GCS Date 2/13/85	Structure No. 29th Ave	Superstructure

REINFORCING STEEL BAR LIST

SIDEWALK & CURB + BLOCKOUT

#4	#5	#6	#7	#8	#9	#10	#11
0.668	1.043	1.502	2.044	2.670	3.400	4.303	5.313

	MARK	Size: Bar No.	Size: Length	No. of Bars	Type	Total Weight	Comments
		5	3'	115		359.84	
SIDE-WALK		5	6'-1½"	115		734.66	TRANSV.
		5	113'-9"	7		830.49	ONG.
					TOT. SIDEWALK =		1925
CURB		4	3'-5½"	77		177.88	TIES
		4	113'-9"	2		151.97	INSIDE TIES
					TOT. CURB =		330
BLOCK-OUT		5	4'-8"	4		19.48	PIER (AT)
		5	4'-8"	4		19.48	INTERIM. "
		5	4'-8"	6		29.22	ABUTS "
					TOT. BLOCKOUT =		68.

SUPERSTRUCTURE TOTAL = 49,898 LBS.

By: CRK Date 2/13/85	Job No. 4254-01-05	Sheet of
Chk'd: GIS Date 2/13/85	Structure No. 29th Ave	Superstructure

REINFORCING STEEL BAR LIST

#4	#5	#6	#7	#8	#9	#10	#11
0.668	1.043	1.502	2.044	2.670	3.400	4.303	5.313

MARK	Size: Bar No.	Size: Length	No. of Bars	Type	Total Weight	Comments
	4	57'-9"	24	—	926	Footing temp bars ✓
	8	6'-5"	59	...L	1011	Front face dowels ✓
	8	~~20'-0"~~ 18'-0"	87	...L 4181	~~4646~~	Back face dowels
	7 ~~8~~	10'-8"	~~88~~ 86	— 252	~~1586~~	Footing top steel
	4	57'-9"	60	—	2315	Temp wall steel
	8	29'-0"	118	|	9137	FF wall steel
	4	21'-0"	59	|	828	BF wall steel
	8	4'-5"	118	⌐	1392	Seat
	8	5'-6"	118	|	1733	FF parapet
	4	57'-9"	10	—	386	Parapet Temp
	4	6'-4"	59	⌋	250	BF Parapet
	4	2'-0"	59	|	79	Approach Slab Dowels
	4	6'-5"	66	—	283	BF Wingwall
	7	6'-5"	88	|	1154	FF Wingwall
	4	31'-10"	22	|	468	Wingwall vertical Temp EF
	8	57'-9"	2	—	154	Top of Parapet
					~~26,345~~ #	~~Total~~
					26,826#	~~Total~~
	6	10'-8"	87		1,394	Footing bottom bars
					ABUT 1	
					28,220	TOTAL

By: GIS Date 2/13/85	Job No. 4252-01-05	Sheet of
Chk'd: BAS Date 1/2/86	Structure No. 29th Ave	Abut. 1

REINFORCING STEEL BAR LIST

#4	#5	#6	#7	#8	#9	#10	#11
0.668	1.043	1.502	2.044	2.670	3.400	4.303	5.313

MARK	Size		No. of Bars	Type	Total Weight	Comments
	Bar No.	Length				
01	8	28'-9"	58	STR.	4452	Wall
02	8	28'-9"	2	STR	154	Wall
03	8	9'-0"	60.	1'-4" 7'-8"	1442	Dowels
04	4	2'-5"	348	2'-4" 1'-8"	562	Wall ties
05	4	4'-8"	48.	1'-0"	150	1' RADIUS Wall ties
06	6	5'-8"	36.	STR	306	Footing
07	4	28'-8"	4	STR	77	Footing
08	10	20'-0"	8.	14'-2 5'-10"	688	Cap
09	10	20'-0"	12.	STR	1033	Cap
10	10	55'-8"	5.	STR	1198	Cap
11	10	25'-0"	2	STR	215	Cap
12	8	4'-0"	28	STR.	299	Dowel to cap
13	5	17'-8"	29	2'-8" 5'-8" 6"	534	Cap stirrups
14	5	16'-7 1/8"	20	2'-8" 5'-1 9/16" 6"	346	" "
15	5	14'-8"	18	2'-8" 4'-2" 6"	275	" "
16	5	55'-8"	4	STR.	232	Cap Temp
16	5	42'-6 7/16"	6	STR	266	" "
17	5	3'-8"	10	2'-8" 6"	38	" "
18	4	27'-8"	48	STR.	887	Wall Temp
					PIER 2	
					13,154	TOTAL

By: AMR Date 2/12/85	Job No. 4252-01-05	Sheet 1 of 1
Chk'd: GIS Date 2/13/85	Structure No. 29th Ave.	Pier 2

REINFORCING STEEL BAR LIST

#4	#5	#6	#7	#8	#9	#10	#11
0.668	1.043	1.502	2.044	2.670	3.400	4.303	5.313

MARK	Size		No. of Bars	Type	Total Weight	Comments
	Bar No.	Length				
	4	57'-9"	24	—	926	Footing Temp Bars
	8	6'-5"	59	..L	1011	FF dowels
	8	~~20'-0"~~ 18'-0"	87	..L 4181	~~4646~~	BF dowels
	7 ~~8~~	10'-8"	~~89~~ 116	— 2520	~~1586~~	Footing Top Steel
	4	57'-9"	56	—	2160	Temp Wall Steel
	8	26'-9"	118	|	8428	FF Wall Steel
	4	18'-9"	59	|	739	BF Wall Steel
	8	4'-5"	118	⌈	1392	Seat
	8	5'-6"	118	|	1733	FF Parapet
	4	57'-9"	10	—	386	Parapet Temp
	4	6'-4"	59	⌋	250	BF Parapet
	4	2'-0"	59	|	79	Approach Slab Dowels
	4	6'-5"	62	—	266	BF Wingwall
	7	6'-5"	82	|	1075	FF Wingwall
	4	29'-6"	22	|	434	Wingwall vertical Temp EF
	8	57'-9"	2	—	154	Top of Parapet
					~~25,263#~~	~~TOTAL~~
					25,743#	
	6	10'-8"	87		1,394	Footing bottom bars
					ABUT 3	
					27,137	Total

By: GIS Date 2/13/85	Job No. 4252-01-05	Sheet of
Chk'd: BAS Date 1/2/86	Structure No. 29th Ave	Abut 3

REINFORCING STEEL BAR LIST

126

#4	#5	#6	#7	#8	#9	#10	#11
0.668	1.043	1.502	2.044	2.670	3.400	4.303	5.313

MARK	Size		No. of Bars	Type	Total Weight	Comments
	Bar No.	Length				
	4	23'-8"	40	—	632	Top Long @ 18"
	8	24'-7"	80	⌐	5251	Bottom Long @ 9"
	5	57'-9"	25	—	1506	Trans. Bottom @ 12"
	4	5'-4½"	80	⊏	287	Abut to Long @ 9"
	6	57'-9"	33	—	2862	Trans. Top @ 9"
					10,539	Total one Approach Slab
	4	11'-0½"	37	⊔	273	Dado Stirrups
	4	23'-8"	6	—	95	Dado Temp.
					368	Total one Dado
		10539 x 2 +	368 x 4	=	22,550#	Total Approach Slab

By: GIS Date 2/13/85	Job No. 4252-01-05	Sheet of
Chk'd: BAS Date 1/2/86	Structure No. 29th Ave	Approach Slabs

✓ GIS

DMJM	PROJECT Temporary Bridge 29th AVE BRIDGE	PROJECT NO: 4252-01-05	PAGE
		BY: KH / DATE: 2/12/85	127
SUBJECT CONCRETE QUANTITIES · Class A Concrete		BAS 1/2/86	

PILES @ ABUT 1.

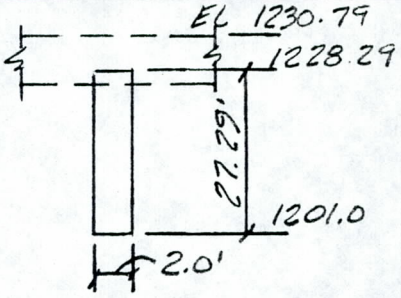

CIRCUM = A × L
A = πR² = 3.1416
3.1416 × 27.29 = 85.73
× 5 = 428.67 / 27 =
✓ 15.88 CU. YDS.

PILE CAP @ ABUT. 1

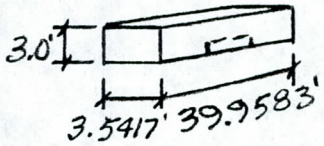

L = 39.9583'
W = 3.5417'
H = 3.0'

39.96 × 3.54 × 3 = 429.56 / 27
= 15.72 CU. YDS. ✓

EMBEDDED PILE

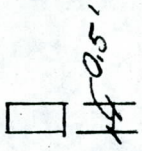

A = πR² = 3.1416
3.1416 × .5 = 1.57 × 5 = 7.85 / 27
= .2907 CU. YDS. ✓
15.72 - .2907
✓ = 15.43 CU. YDS.

BACK WALL @ ABUT. 1

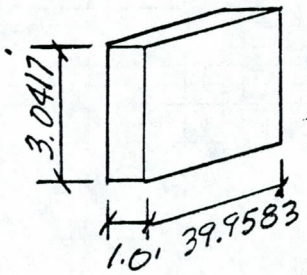

L = 39.9583'
W = 1.0'
H = 3.0417'

39.9583 × 1.0 × 3.0417
= 118.50 / 27 = 4.39 CU. YDS. ✓

WING WALLS (2)

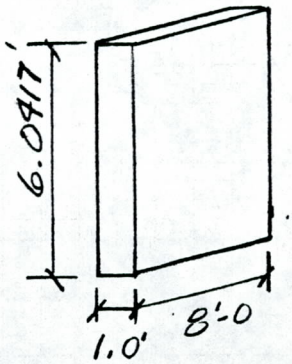

L = 8.0'
W = 1.0'
H = 6.0417'

8.0' × 1.0 × 6.0417 = 48.3 / 27
= 1.790 × 2
✓ = 3.58 CU. YDS. ✓

ABUT 1 42.86
ABUT 2 42.86
TOTAL 85.72 CU. YDS.

REINFORCING STEEL BAR LIST

128

#4	#5	#6	#7	#8	#9	#10	#11
0.668	1.043	1.502	2.044	2.670	3.400	4.303	5.313

MARK	Size: Bar No.	Size: Length	No. of Bars	Type	Total Weight	Comments
1	#4	~~[illegible]~~ 6'-6"	~~34~~ 48	U	~~[illegible]~~ 208.42	WING WALLS
2	#4	8'-8"	16	—	92.63	" " F.F.
3	#5	9'-6"	20	L	~~237.80~~ 198.17	" " B.F.
4	#4	4'-9½"	80	1	233.80	ABUT. 1 & 2 WALL
5	#4	5'-8½	54	7	205.91	" " " "
6	#4	39'-7½"	12	—	317.63	" " " " F.F. B.F.
7	#4	11'-6"	88	⊠	676.02	PILE CAP
8	#6	39'-7½"	16	—	952.27	" " TOP
9	#6	39'-7½"	12	—	714.20	" " BOT.
10	#8	30'-7½"	60	7	4906.13	PILES
11	#4	6'-2⅞"	270	O	1125.37	PILES
12	#8	4'-6"	20	—	~~[illegible]~~	PIN INTO GIRDERS
					240.30	
				~~TOTAL~~	~~9,655.47~~	~~LBS/2 = 4828~~ # ~~per Abut~~.
					~~[illegible]~~ #	~~TOTAL ÷ 2 = [illegible]/Abut~~
					9870.#	÷2: 4935#/each abut.

By: KH Date 2-13-85	Job No. 4252-01-05	Sheet 1 of 1
Chk'd: BAS Date 1-2-86	Structure No. 29th AVE BRIDGE	V GIS

✓ GIS

DMJM	PROJECT Temporary Bridge 29th AVE. BRIDGE	PROJECT NO: 4252-01-05	PAGE 129
		BY: KH / DATE: 1-13-85	

SUBJECT QUANTITIES — EXP. JNT. MAT'L. BAS 1/2/86

ABUT. 1

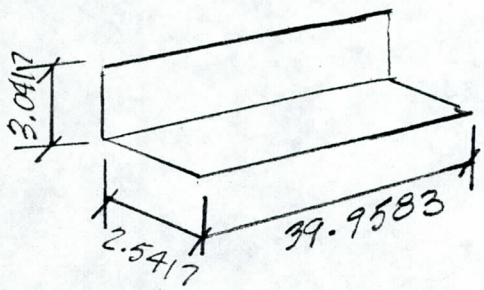

3.0417 + 2.5417 x 39.9583 =

223.10 SQ. FT. ✓

ABUT. 2. 223.10 SQ. FT.

DMJM	PROJECT: 29th AVE. BRIDGE	PROJECT NO: 4252-01-03	PAGE 130
		BY: GHAZIA / DATE: 1-3-86	
SUBJECT: RETAINING WING WALL		JFS 1-3-86	

AT STA. 11+70 ℄ OF BRIDGE ✓

ELEV. = 35.74'

CROSS SECT. SLOPE = 0.015 '/' ✓

0.015(25') = 0.375' ✓

35.74 − 0.375 = 35.36' ✓

1235.36' − 1202 = 33.36' ✓

HEIGHT OF STEM = 33.36

γ SOIL = 121 #/ft³ ✓

STEM (TOP THICKNESS) = 1.0'

STEM (BOT. ") = 3.08' ✓ 37"

TOE = 2.92'

HEEL = 6.0'

TL h = 36.36'

$P = K\omega h$

$= 40(36.36) = 1{,}454$ #/ft

$P_a = Ph/2$

$P_a = 1{,}454(36.36/2)$

$P_a = 26{,}434$ #

$P_p = 300(6)(6/2) = 5{,}400$ #

SURCHARGE IS ZERO

ACTIVE PRESSURE = 40 PSF/L'

PASIVE PRESSURE = 300

COEFF. OF BASE f_r = 0.45

f_c' = 3000 PSI CLASS 1

f_y = 60 KSI

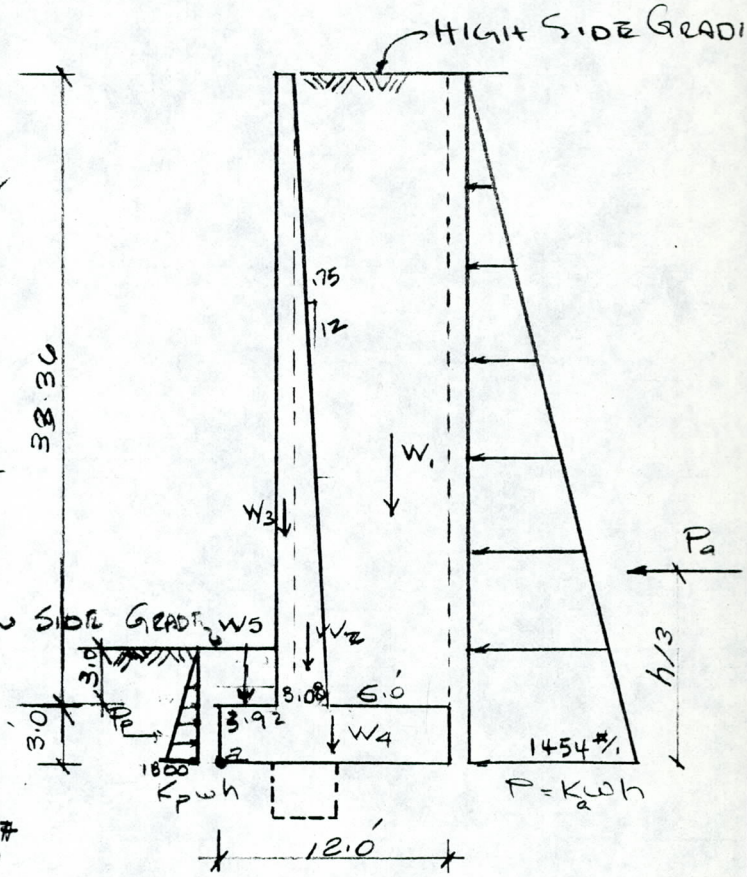

34.29
2.0
32.29 from top to top of footing

DMJM	PROJECT: 29th AVE BRIDGE	PROJECT NO: 4252-01-03	PAGE 131
		BY: GHAZIA / DATE: 1-3-86	

SUBJECT RETAINING WALL (DESIGN) JFS 1-3-86

WEIGHTS, lb	MOM. ARM	RIGHT MOM. ft-#
$W_1 = 33.36' \times 6.0' \times 1.0' \times 120 = 24{,}019^{\#}$ ✓	9.0'	216,171
$W_2 = 33.36' \times 2.08' \times 1.0' \times 150 = 10{,}408^{\#}$	4.61'	47,981
$W_3 = 33.36 \times 1.0' \times 1.0' \times 150 = 5{,}004^{\#}$	3.42'	17,114
$W_4 = 3.0' \times 12.0' \times 1.0' \times 150 = 5{,}400^{\#}$ *	6.0'	32,400
$W_5 = 1.0' \times 2.92' \times 1.0' \times 120 = 350.4^{\#}$	1.46	511.6
$45{,}181^{\#}$		314,178 ft

OVERTURNING FORCE	MOM. ARM	O.T.M ft-lb
$P_a = 26{,}434^{\#}$	12.12	+ 320,380
$P_p = 5{,}400$	2	− 10,800
		309,580

S.F. AGAINST OVERTURNING $= \frac{314{,}178}{309{,}580} = 1.0 < 1.5$

TRY BASE WIDTH OF 16.0'

$P_p = 300(9)(9/2)$

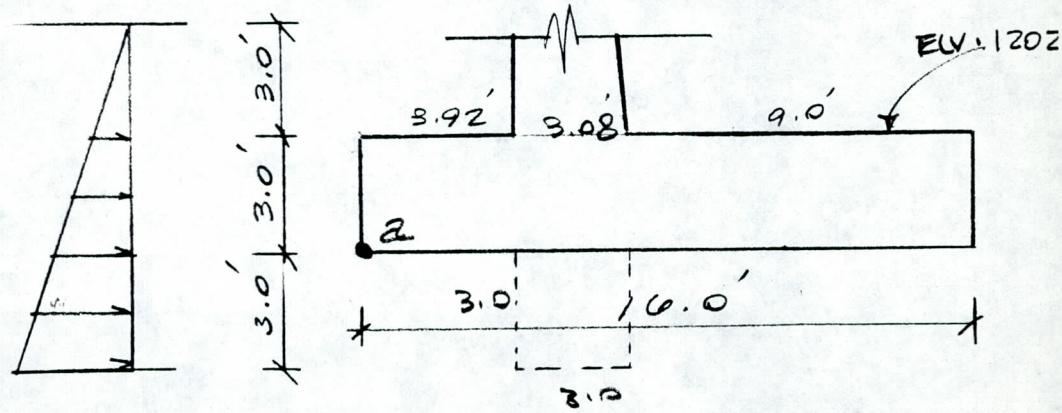

WEIGHTS, lb	MOM. ARM	RIGHT MOM.
$W_1 = 33.36 \times 9.0' \times 1.0' \times 120 = \cancel{36,029}$ 40,032#	11.5'	~~414,333~~ 460,368
$W_2 = 33.36 \times 2.08 \times \frac{1}{2} \times 1.0 \times 150 = 5,204$	5.61'	29194
$W_3 = 33.36 \times 1.0' \times 1.0' \times 150 = 5,004$	4.42'	22,118
$W_4 = 3.0' \times 16.0' \times 1.0' \times 150 = 7,200$	8.0'	57,600
$W_5 = 3.0 \times 3.92 \times 1.0 \times 120 = 1,411$	1.96'	2,766
$W_6 = 3.08 \times 3.0' \times 1.0 \times 150 = 1,386$ (KEY)	5.46	7,568
56234 #		533580 '#

S.F. AGAINST OVERTURNING $= \frac{533580}{319,954} = 1.67 > 1.5$

X DISTANCE OF RESULTANT FORCE FROM TIP OF TOE (a)

$$X = \frac{533,580 - 309,580}{56234} = 3.98'$$

SLIDING

COEFF. OF FRICTION OF SOIL ON CONC. = 0.45

HORIZ. FORCES = $P_a = 26,434$#

RESISTING HORIZ. FORCES = $P_r = \mu(\Sigma N) + P_p$ (CONSIDERING KEY)

$= 0.45(61,438) + 300(9)(9/2)$

$= 39,797$

F.S. AGAINST SLIDING $= \frac{39,797}{26,434} = 1.50$

BASE PRESSURE

DMJM	PROJECT: 29th AVE. BRIDGE	PROJECT NO: 4252-01-02	PAGE 133
		BY: GHAZIA / DATE: 1-3-86	
SUBJECT: RETAINING WALL		JFS 1-3-86	

$$S_P = \frac{2(P)}{3(\bar{x}-e)} = \frac{2 \times 56234}{3 \times 3.98}$$

$$= 9.42 \text{ KSF} < 13 \text{ KSF} \checkmark$$

$f_c = 4{,}000$
$f_y = 60{,}000$

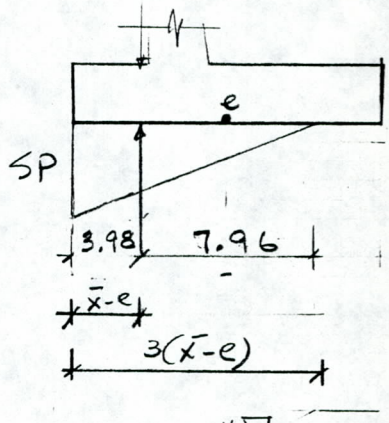

h (ft)	V (k)	M (ft-k)	d	$\frac{M_U}{\phi b d^2}$ (1.4)	$\frac{M_U}{\phi b d^2}$ (1.7)	ρ	As "□
0	0	0	10			0.0033	0.40
4	.320 k	.427	13"	3.93	4.77	0.0033	0.51
8	1.28	3.413	16"	20.74	25.18	0.0033	0.63
12	2.88	11.52	19"	49.64	60.28	0.0033	0.75
16	5.12	27.31	22"	87.77	106.6	0.0033	0.87
20	8.0	53.33	25"	132.73	161.2	0.0033	0.99
24	11.52	92.16	28"	182.86	222.0	0.0039	1.31
28	15.68	146.35	31"	236.9	287.66	0.0051	1.90
32	20.48	218.45	34"	294	357.0	0.0065	2.65
33.36	22.26	247.51	35" 34.4	314.3	381.65	0.0070	2.94 4.09□

$\rho_{min} = 0.0015$ FOR VERTICAL BARS

Temp. & Shrinkage $A_s = 0.0025\, b\, t$

$t = 12''$ $A_s = 0.36 \text{ in}^2$ → 0.54 1/3 Inside face
$t = 24''$ $A_s = 0.72 \text{ in}^2$ → 0.91 2/3 Outside face
$t = 37''$ $A_s = 1.11 \text{ in}^2$

DMJM	PROJECT 29 th AVE BRIDGE	PROJECT NO:		PAGE
		BY: GHAZIA	DATE: 1-3-86	134
SUBJECT RETAINING WALL		JFS 1-3-86		

checking shear

$V_u = P_a (1.7) = 26,434^{\#}$

$\phi V_c = \phi 2 \sqrt{f'_c}\, bd = (0.85)(2)\sqrt{3000}\,(12)(32.83)$

$\phi V_c = 36,683^{\#} > 26,434^{\#}$ ✓

DESIGN OF HEEL (& FROM STEM)

$V_u = 33.36 \times 6.25 \times 120 \times 1.3 + 3.0 \times 6.25 \times 150 \times 1.3 = 36,182^{\#}$

$\phi V_c = (0.85)(2)\sqrt{3000}\,(12)(33) = 36,872 < 36,182$ ✓

$M_u = 56,110\,(9/2) = 252,495^{\prime-\#}$

$\frac{M_u}{\phi b d^2} = \frac{252,495 \times 12}{0.9\,(12)(33)^2} = 258$

$\rho = 0.0046$ $\quad A_s = 0.0046 \times 12 \times 33 = 1.82\ in^2$

#7 @ 4"

USING #4 @ 12" LONGIT.

DMJM	PROJECT: 29th AVE. BRIDGE	PROJECT NO:		PAGE
		BY: GHAZIA	DATE: 1-3-86	135
SUBJECT: RETAINING WALL		JFS 1-3-86		

DESIGN OF TOE

V_u @ dist. d FROM FACE OF STEM

$V_u = [7.73 \times 2.75 + 2.21 \times 2.75/2]\,1.7$

$V_u = 24.3 < 36.872$ ✓

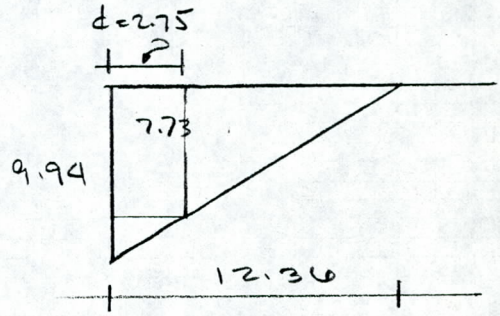

$M_u = (6.63)(4.12^2/2)1.07 + 3.31 \times \frac{4.12^2}{3} \times 1.07$

$M_u = 127.5$ ft-k

$\frac{M_u}{\phi b d^2} = \frac{12750 \times 12}{0.9(12)(33)^2} = 13$

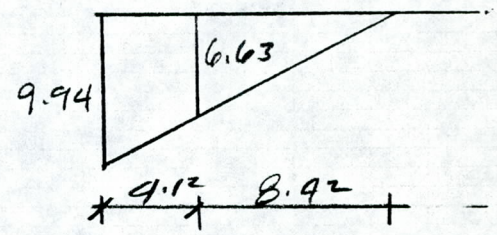

$\rho_{min} = 0.0033$

$A_s = 0.0033 \times 12 \times 33 = 1.31\ in^2$

#6 @ 4"

USING #4 @ 12" LONG.

DMJM	PROJECT 29th AVE- BRIDGE	PROJECT NO:		PAGE
		BY: GHARIA	DATE: 1-3-86	136
SUBJECT RETAINING WALL		JFS 1-3-86		

Development length #9

$$l_d = \frac{0.04\,A_b f_y}{\sqrt{f'_c}} = \frac{0.04(1)(60{,}000)}{\sqrt{3000}} = 43''$$

$$l_d = 0.0004\,d_b\,f_y = 0.0004(1.128)(60{,}000) = 27''$$

USING 48" OF l_d

SPLICE LENGTH = 74"

DMJM	PROJECT: 29th AVE. BRIDGE	PROJECT NO: 4252-01-03	PAGE 137
		BY: G HARIA / DATE: 1-3-86	

SUBJECT RETAINING WALL (DESIGN) JFS 1-3-86

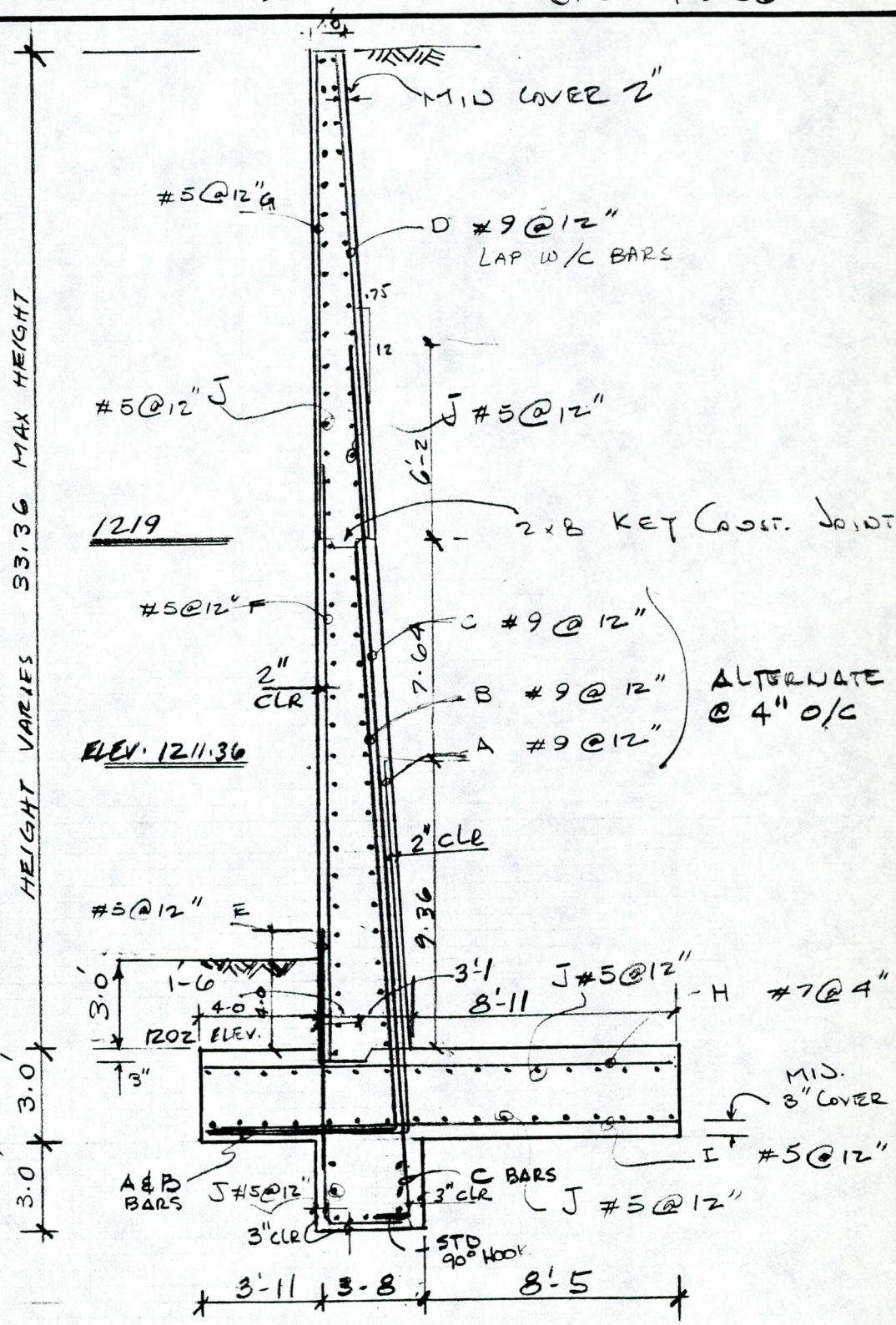

SPLICE LENGTH #9 MIN. 74"

" " #5 MIN 26"

DMJM	PROJECT 29th ave Bridge	PROJECT NO:		PAGE 138
		BY: BAS	DATE: 1-3-86	
SUBJECT QUANITIES		JFS 1-3-86		

CLASS A APPROACH SLABS
EXTENSION TO EXISTING APPROACH SLAB ON CANAL BRIDGE
SEE p 113

SLAB VOLUME = (1)(12)(58)/27 = 25.78 CY CLASS A CONCRETE

REINF. SLAB.
SEE p. 126

BAR	L	NO.	WT	COMMENTS
4	12'-0"	40	321	TOP LONG @ 18"
8	12'-0"	80	2563	BOT LONG @ 9"
5	57'-9	12	723	TRANS BOT @ 12"
6	57'-9"	16	1388	TRANS TOP @ 9"
	TOTAL		4995. lb	

DMJM	PROJECT 29th Ave Bridge	PROJECT NO:		PAGE
		BY: BAS	DATE: 1-3-86	139
SUBJECT Quantities		JFS	1-3-86	

DRILLED SHAFT FOUNDATION

L.F 10(27.3') = 273'

CLASS A CONCRETE BRIDGE & DETOUR BRIDGE CAPS

DETOUR BRIDGE pg 127 15.43(2) = 30.86

CONC BRIDGE

PIER 2 p117	36.82 CY
ABUT 1 p116	0
ABUT 3 p118	0

TOTAL 30.86 + 36.82 = 67.68 CY

DMJM	PROJECT	PROJECT NO:		PAGE
		BY: JFS	DATE: 1-3-86	140

SUBJECT WING WALL (4 THUS) DM 1-3-86

MARK	SIZE No	SIZE Length	No. of Bars	Type	Total Weight	Comment
	#5	13'-1	22	L	300	KEY (VERT
	#9	30'-6	21	⌋	2177	VERT (BAR C)
	#5	20'-6	7	STR	150	KEY HORIZ
	#5	15'-6	22	STR	356	FTG TRANSV (B)
	#7	15'-6	63	STR	1996	FTG TRANSV (T)
	#5	20'-6	32	STR	684	FTG LONGIT (T & B)
	#9	19'-3	21	⌋	1375	VERT (BAR A)
	#9	26'-11	21	⌋	1922	VERT (BAR B)
	#5	19'-3	21	STR	422	WALL VERT I.S.
	#5	16'-4	21	STR	358	WALL VERT I.S.
	#9	16'-4	21	STR	1166	WALL VERT O.S.
	#5	19'-6	68	STR	1383	WALL HORIZ EA FACE

TOTAL WT EA WING WALL 12289#

TOTAL WT
(4) WING WALLS 4 x 12289 = 49156# (24.6 TONS)

DMJM	PROJECT	PROJECT NO:	PAGE
		BY: BAS / DATE: 1-3-86	141

SUBJECT QUANTITIES JFS 1-3-86

ABUT 1 ref p 106

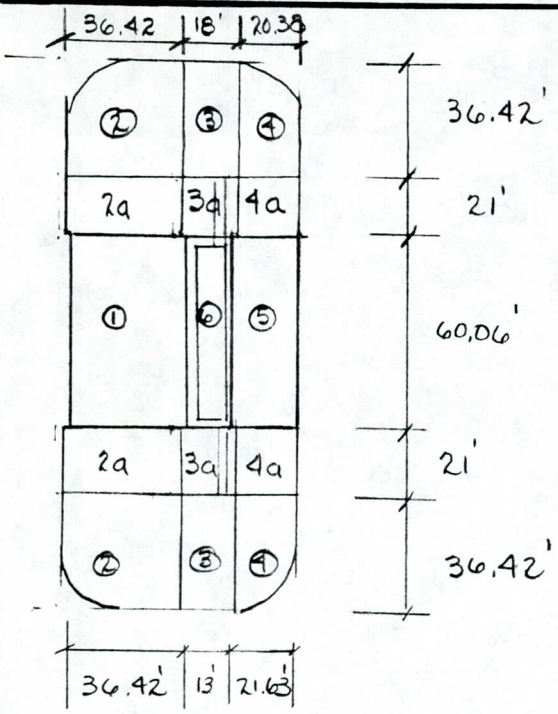

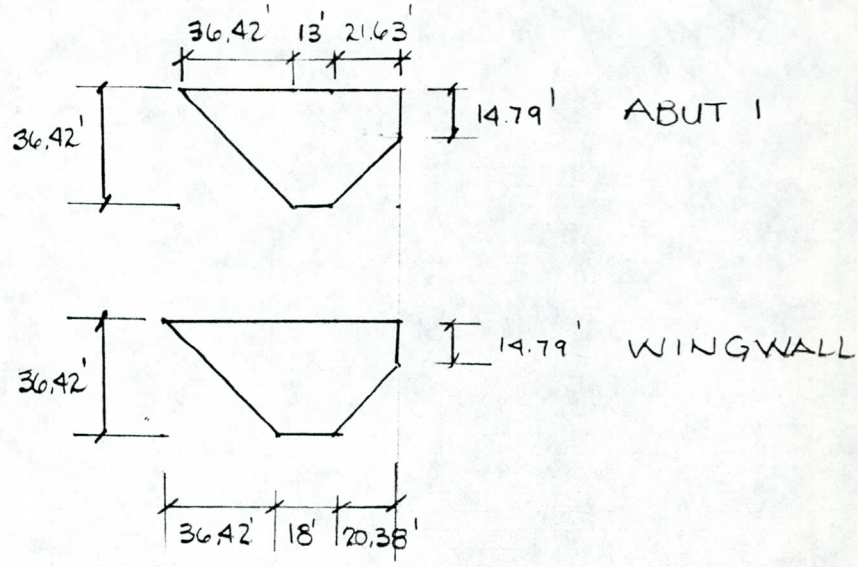

1. $A = 36.42^2(.5) = 663.21\ \phi$
   $V = 663.21\frac{(60.06)}{27} = \underline{1475.27}$ CY

2. $V = 0.25(1/3)\pi r^2 h = \frac{0.25}{3}\pi(36.42)^2\frac{36.42}{27} = 468.41(2) = \underline{936.82}$ CY

3. $A = 663.21\ \phi$
   $V = 663.21\frac{(18)}{27} = 442.14(2) = \underline{884.28}$ CY

4. $r_{avg} = 29.03'$
   $V = .25(1/3\,\pi r^2 h) = \frac{.25}{3}\pi(29.03)^2\frac{36.42}{27} = 297.6(2) = \underline{595.21}$ CY

5. $A = 21.63^2(.5) + 21.63(14.79) = 553.84\ \phi$
   $V = 553.84\frac{(60.06)}{27} = \underline{1231.98}$ CY

6. $V = 13(60.06)\frac{36.42}{27} = \underline{1053.19}$ CY

$V_{TOTAL} = \underline{\underline{6176.75}}$ CY

DMJM	PROJECT 29th ave Bridge	PROJECT NO:		PAGE
		BY: BAS	DATE: 1-3-86	142
SUBJECT Quantities		JFS 1-3-86		

ABUT 3 ref p 105

1. $A = 33.96^2(.5) = 576.64\ \phi$
   $V = 576.64\left(\frac{60.06}{27}\right) = \underline{1282.71}$ CY

2. $V = .25\frac{\pi}{3}(33.96)^2\frac{33.96}{27} = 379.76(2) = \underline{759.52}$ CY

3. $A = 576.64\ \phi$
   $V = 576.64\left(\frac{18}{27}\right) = 384.43(2) = \underline{768.85}$ CY

4. $r_{avg} = 27.79'$
   $V = \frac{0.25\pi}{3}(27.79)^2\frac{33.96}{27} = 254.35(2) = \underline{508.70}$ CY

5. $A = (21.63)^2(.5) + 21.63(12.33) = 500.63\ \phi$
   $V = 500.63\left(\frac{60.06}{27}\right) = \underline{1113.62}$ CY

6. $V = 13(60.06)\left(\frac{33.96}{27}\right) = \underline{982.05}$ CY

$V_{TOTAL} = \underline{\underline{5415.45}}$ CY

DMJM	PROJECT 29 th AVE BRIDGE	PROJECT NO:		PAGE
		BY: BAS	DATE: 1-3-86	143
SUBJECT QUANTITIES		JFS 1-3-86		

WING WALLS
TOTAL 4
CLASS A CONCRETE

FTG	16(3)(21)/27	37.33
KEY	3.67(3)(21)/27	8.56
WING WALL	[1.0(33.36) + 1/2(2.08)(33.36)] 20/27	50.41
		96.30 CY

TOTAL 4(96.30) = 385.20 CY

EXCAVATION

ABUT 1

ADDITIONAL EXCAVATION

2a $A = 36.42^2(.5) = 663.21\ \phi$
$V = 663.21\frac{(21)(2)}{27} = 1031.67$ CY

4a $A = (21.63)^2(.5) + 21.63(14.79) = 553.84\ \phi$
$V = 553.84\frac{(21)(2)}{27} = 861.53$ CY

3a $V = 18.21(2)\frac{(36.42)}{27} + \frac{3^2(.5)(2)(21)(2)}{27} + \frac{3.67(21)(2)(3)}{27}$
$= 1050.88$ CY

TOTAL ADD EXC FOR WING WALL ABUT 1 2944.08 CY

ADDITIONAL EXC. ABUT 3

2a $A = 33.96^2(.5) = 576.64\ \phi$
$V = 576.64\frac{(21)(2)}{27} = 897$ CY

4a $A = 21.63^2(.5) + 21.63(12.33) = 500.63\ \phi$
$V = 500.63\frac{(21)(2)}{27} = 778.76$ CY

3a $V = 18(21)(2)\frac{(33.96)}{27} + \frac{3^2(.5)(2)(21)(2)}{27} + \frac{3.67(21)(2)(3)}{27}$
$= 982.00$ CY

TOTAL ADD EXC. FOR WING WALL ABUT 3 2657.76 CY

TOTAL 5601.84 CY

DMJM	PROJECT 29th AVE BRIDGE	PROJECT NO:		PAGE
		BY: BAS	DATE: 1-3-86	144
SUBJECT QUANTITIES — ABUT. 1		JFS	1-3-86	

BACKFILL

ADDITIONAL BACKFILL FOR WING WALLS
ref p 102 ABUT 1

FOOTING 16(21)(2)(3)/27 = 74.67 CY 74.67
WING WALL [1(33.36) + 1/2(2.08)(33.36)] 20(2)/27 = 100.82 CY
KEY 3.67(3)(21)(2)/27 = 17.13 CY 17.13

ABUTMENT

FOOTING 3.0 x 11.0 x 58.0/27 = 70.9
WALL 1/2 * (1.0 + 2.0) * 33.37 x 58.0/27
1.0 x 4.0 x 58.0/27 = 116.1

CONC WALL & FTG 379.62 CY

VOID AREA UNDER BRIDGE

A = 14.79 (13.34) + 1/2 (14.79)^2 = 306.67 ⌀

V WINGWALL = $\frac{306.67(42)}{27}$ = 477.04 CY

V ABUT = $\frac{306.67(60.06)}{27}$ = 682.17 CY

BACKFILL

WINGWALLS ABUT 1 2944.08 − 669.66 = 2274.42 CY
BACKFILL ABUT 1 6176.75 − 869.17 = 5307.58 CY

DMJM	PROJECT 29th ave bridge	PROJECT NO:		PAGE
		BY: BAS	DATE: 1-3-86	145
SUBJECT QUANTITIES — ABUT. 3		JFS	1-3-86	

BACKFILL

ADD BACKFILL FOR WING WALLS
ref p. 105

FOOTING 16(21)(2)(3)/27 = 74.67 CY — 74.67
WING WALL [1(30.96) + 1/2(2.08)(30.96)] 20(2)/27 = 93.57 CY
KEY 3.67(3)(21)(2)/27 = 17.13 CY — 17.13

ABUTMENT

FOOTING 3.0 x 11.0 x 58.0 / 27 = _____ 70.9
WALL 1/2 x (1.0+2.0) x 33.37 x 58.0
1.0 x 4.0 x 58.0) ÷27 = _____ 116.1

CONC WALL + FTGS 372.4 C.Y.

VOID AREA UNDER BRIDGE

A = 14.79(13.34) + 1/2(14.79)² = 306.67 □
V = 306.67(60.06 + 42) = 31398.81 / 27 = 1162.92 CY

BACKFILL WINGWALLS ABUT 3 2657.76 - 662.41 = 1995.35 CY

BACKFILL ABUT 3 5415.45 - 869.17 = 4546.28 CY