20080027

Final Drainage Report

Higley Road: EMF to 1370' North

TOG Project No. ST097

September 2008

GILBERT
ARIZONA

Prepared for
Town of Gilbert

Prepared by

AZTEC
www.aztec.us TYPSA group

4561 East McDowell Road
Phoenix, AZ 85008-4505
602-454-0402
602-454-0403

Registered Professional Engineer (Civil)
CERTIFICATE NO. 24971
TONY A. BOKICH
9-10-08
ARIZONA, U.S.A.
Expires 3-31-11

Table of Contents

1 INTRODUCTION 3

1.1 Purpose 3

2 LOCATION 4

3 SITE CONDITIONS AND PROPOSED DEVELOPMENT 4

4 FEMA FLOODPLAIN CLASSIFICATION 5

4.1 FEMA Studies 5

5 OFF-SITE DRAINAGE 5

5.1 Background 6

5.2 Hydraulic Modeling 6

5.3 Scour Analysis 7

5.3.1 LONG TERM DEGRADATION 8

5.3.2 GENERAL SCOUR 8

5.3.3 LOCAL SCOUR 9

5.3.4 BEND SCOUR 9

5.3.5 BED-FORM SCOUR 9

5.3.6 LOW FLOW INCISEMENT 10

5.3.7 TOTAL SCOUR 10

6 ON-SITE DRAINAGE 10

6.1 Background 10

6.2 Methodology 10

6.3 Design Criteria 11

7 RETENTION REQUIREMENTS 12

8 REFERENCES 13

9 FIGURES 13

10 APPENDICES 13

Registered Professional Engineer (Civil)
CERTIFICATE NO.
24971
TONY A.
BOKICH
Date Signed 7-10-08
ARIZONA, U.S.A.
Expires 3/31/11

List of Figures

Figure 1 Project Location Map

Figure 2 FEMA Map

Figure 3 Drainage Areas Map

Registered Professional Engineer (Civil)
CERTIFICATE NO.
24971
TONY A.
BOKICH
9-10-08
Date Signed
ARIZONA, U.S.A.
Expires 3-31-11

1 INTRODUCTION

1.1 Purpose

The purpose of this drainage report is to present the drainage concept, criteria, methodology and analysis, both on-site and off-site, in support of the proposed roadway improvements on Higley Road, from the East Maricopa Floodway (EMF) to 1370 feet north of the Roosevelt Water Conservation District (RWCD) Irrigation Canal.

The project is being designed for the Town of Gilbert, (TOG Project #ST097) and will widen the existing roadway according to the Town's major arterial section, which consists of a 94' wide urban street section with a 16' raised median. In addition to the roadway improvements, the existing bridges over the EMF and the RWCD Irrigation Canal will also be widened on the east and west sides to accommodate the new arterial section.

This report will address the recommended drainage improvements, associated with the proposed roadway. The purpose of the drainage report is to address the following issues:

- Establish drainage design criteria and concepts.
- Evaluate off-site and on-site flows that will impact the project.
- Document engineering solutions that minimize impacts to surrounding properties and control rainfall runoff.
- Identify FEMA floodplain designations.
- Evaluate impacts to the water surface elevations within the EMF due to the bridge widening.
- Analyze scour in the EMF associated with the new piers.

This drainage report summarizes the drainage concept; analysis and design for the 100% plan submittal. Recommendations for drainage improvements include the construction of concrete scuppers and curb opening inlets and pipes to collect and convey storm water runoff to existing retention basins and proposed storm water storage trenches located along Higley Road.

Criteria for the design and analysis of the proposed drainage improvements are based on the Town of Gilbert *Public Works and Engineering Standards and Details*. Hydrologic and hydraulic calculations were performed according to the methodology and procedures outlined in the Drainage Design Manual of Maricopa County, Volumes 1 and 2.

Included in the appendices are the drainage area maps, off-site and on-site peak flow computations, EMF hydraulics, EMF scour calculations, scupper and catch basin analyses and the retention design calculations.

2 LOCATION

This project is located within the limits of the Town of Gilbert, Maricopa County, Arizona. Specifically, this portion of Higley Road is the section line of Sections 10 and 11, Township 2 South, Range 6 East of the Gila and Salt River Base Meridian, Maricopa County, Arizona. The drainage improvements on Higley Road extend from just south of the bridge over the East Maricopa Floodway to 1370 feet north of the Roosevelt Water Conservation District Irrigation Canal. The project location is shown in Figure 1, Project Location Map.

3 SITE CONDITIONS AND PROPOSED DEVELOPMENT

Existing portions of Higley Road between Germann Road and Queen Creek Road have been widened to the arterial section standards as a part of the residential developments in the area. The portion of Higley Road included in this project is currently one lane northbound and southbound, including the existing bridge. Along the west side of Higley Road, north of the EMF Bridge to the project limits, several single parcels within a County Island border the site. On the northeast leg of the project another parcel within County jurisdiction is located just north of the bridge. The northeast project improvements will tie into existing improvements constructed with the single-family residential development of Windmill Ranch. The limit of improvements to Higley Road will extend just south of the bridge and tie into existing full street improvements constructed with the commercial development, Higley Pavilion Phase I, on the west side of Higley Road and the single-family development, Coronado Ranch, on the east side of Higley Road.

The new roadway will generally include three lanes of traffic in each direction comprised of an 11.5-foot inside lane, two 11-foot outside lanes, a 5.5-foot bicycle lane and a raised median. One concrete scupper and three catch basins are designed to capture pavement drainage to minimize flow-spread widths and to convey the storm

water to the existing retention basins and proposed storm water storage trenches per the *Town of Gilbert Public Works and Engineering Standards and Details.*

4 FEMA FLOODPLAIN CLASSIFICATION

4.1 FEMA Studies

The Federal Emergency Management Agency (FEMA) has developed Flood Insurance Rate Maps (FIRM) within the project watershed. The project location of Higley Road, from the EMF Bridge to 1370 feet north of the RWCD Canal is located in panel 2690, Map No. 04013C2690H for Maricopa County, Arizona and Incorporated Areas, revised September 30, 2005. Refer to Figure 2 for the latest FEMA FIRM map of the project area. The majority of the project area is located in Shaded Zone X on the FIRM panel.

Shaded Zone X is defined as: *"Areas of 0.2% annual chance flood; areas of 1% annual chance flood with average depths less than one foot or with drainage areas less than one square mile; and areas protected by levees from 1% annual chance flood."*

Contained within the EMF right-of-way is the Flood Zone A. The only improvements within the EMF channel will be the widening of the bridge piers to the east and west of the existing piers.

5 OFF-SITE DRAINAGE

The existing topography in this area gradually slopes to the northwest. Due to the development adjacent to the roadway improvements, a majority of the off-site runoff south of the bridge that would have impacted the road has been retained within the on-site improvements as required by the Town. North of the bridge, the construction of the EMF and the irrigation canal has blocked off-site flows that would impact the roadway and the County parcel on the east side of Higley Road. The construction of curb and gutter will help to reduce any ponding in the parcels northwest of the bridge by containing the runoff generated within the roadway. The Higley Road improvements will have no negative drainage related impacts to the adjacent properties. The only significant off-site drainage feature within the project limits, the East Maricopa Floodway, will be discussed further within the following sections.

5.1 Background

The East Maricopa Floodway (EMF) is one of the major regional outfalls for the eastern Maricopa County cities. In 1999, HNTB Corporation, under contract with the Flood Control District of Maricopa County, assessed the conveyance capacity of the entire EMF for three 100-year discharge rates: the original design discharges; the future discharges under the future land use in the watershed; and the existing discharges under the 1999 land use. One of the objectives of HNTB's study was to develop the HEC-RAS models to determine the existing channel performance for the three 100-year discharge rates.

The total EMF project is divided into six reaches from the downstream end at Gila River (Reach 1) to the upstream end at Princess Park (Reach 6). The portion of the EMF that contains the Higley Road Bridge is within Reach 4. Within this portion of Reach 4, the EMF is a trapezoidal earthen channel with an approximate top width of 200 feet. The EMF channel crosses Higley Road at a 40-degree skew and flows in a southwesterly direction. The existing HEC-RAS analysis included modeling for the existing Higley Road Bridge.

Due to the bridge improvements included in this project, revisions to the existing model were performed to verify that the pier extensions to the east and west sides of the bridge will not adversely impact the water surface elevations or freeboard under the bridge. The Flood Control District of Maricopa County has provided the HEC-RAS analyses developed by HNTB. Based on direction from FCDMC in a telephone conversation on April 22, 2008, the 100-year design flow of 6,900 cfs is the flow analyzed to determine the freeboard that will be provided with the new bridge improvements.

5.2 Hydraulic Modeling

As mentioned in the previous section, the Flood Control District of Maricopa County provided AZTEC with the existing HEC-RAS analysis to modify for the proposed bridge improvements. The hydraulic modeling was performed using the U.S. Army Corps of Engineers' HEC-RAS program, Version 3.1.3. Due to changes in the new versions of the program, the existing model that was obtained did not run properly because there was not a distance from the upstream cross-section to the bridge deck. The existing model was adjusted by changing the distance to 0.1 feet and offsetting that value in the bridge deck width. Once these changes were completed the model ran properly. Another change that was made to the existing model was to the pier widths. The existing model had the width of the piers set at 1.49 feet, though the existing piers are 2 feet wide. The adjustments were made to the piers for the Higley Road Bridge and a copy of the existing model was then created to modify with the new

bridge information. This modified "existing" model serves as the base model for this project and is referred to hereafter as the "base model".

Improvements to the bridge will include widening of both the east and west side of the bridge and extending the piers for the additional deck width. The base model was modified to include the new width of the bridge. Due to the changes in the Version 3 HEC-RAS, the cross-sections immediately upstream and downstream of the bridge needed to be moved out of the bridge deck. New cross-sections were created upstream and downstream of the bridge and were adjusted to match with the existing ground profile provided in the FCDMC HEC-RAS based model.

Higley Road is a normal crown section. Due to the widening of the roadway section, the low chord of the bridge will be lowered by 0.48 feet. These changes were also added to the HEC-RAS analysis to determine the provided freeboard.

Once the base model was modified, the proposed conditions model was computed and the results were compared to the base model results for the 6,900 cfs 100-year design flow. As the results show in Appendix A, the water surface elevation impacts at the bridge and immediately upstream and downstream of the bridge are insignificant, all are less than 0.1 feet increase. With the bridge at River Mile 13.954 the water surface elevations tie back into the base model upstream at River Mile 14.754 and downstream at River Mile 13.911.

The freeboard was determined based on the proposed conditions with the EMF under the Higley Road Bridge. The freeboard required, as stated by FCDMC, is the greater of 2.0 feet or 0.2*He for subcritical flows, where He is the specific energy head. The freeboard provided at the upstream section of the bridge is 2.50 feet and the freeboard provided at the downstream section of the bridge is 2.91 feet, exceeding the freeboard requirements. The results of the HEC-RAS analysis and the freeboard calculations have been provided in Appendix A.

5.3 Scour Analysis

The hydraulic data that was used for the analysis was provided by the Flood Control District of Maricopa County (District) in an email from Mr. Waskowsky dated April 30, 2008. Per subsequent discussions with the District and reviews of scour calculations by the District, the 100-year design flow of 6,900 cfs and the 500-year flow of 11,730 cfs (1.7 x 6,900) were selected.

The Drainage Design Manual for Maricopa County (DDMMC), Hydraulics, outlines the District's scour estimating methodology. The Chapter 11 (draft), Sedimentation, is dedicated to outlining the District's erosion and sedimentation procedures. Six forms of scour were considered or analyzed for this reach of the EMF in the vicinity of the Higley Road Bridge; long term degradation, general scour, local scour, bend scour,

bed-form scour and scour due to low flow incisement. The following sections provide discussion of the results of investigating each form of scour.

5.3.1 LONG TERM DEGRADATION

Long term degradation was evaluated by comparing the original bed slope of the channel (construction ca. 1985) with the bed slope at the time of the HNTB Study (1999). The results of the evaluation indicate that the original bed slope of the channel was S=0.00050 ft/ft and the bed slope at the time of the HNTB report was 0.000488 ft/ft. This change in slope is very minor over a period of 14 years. Since the channel is man-made and has grade control structures at regular intervals, the long term scour is not considered to be a factor in the total scour estimate for the bridge. A plan sheet from the channel reconstruction project in 1985 and the two representative cross sections from the HNTB HEC-RAS model are included in Appendix A.

5.3.2 GENERAL SCOUR

General scour is the lowering of all or part of the streambed or artificial channel due to stormwater runoff in a typical reach of channel. The three General Scour equations considered for this bridge crossing are the Neill, Blench and Lacey equations. The Neill equation is most applicable where there is a constriction in the channel due to a bridge or some other feature. In this location the bridge does not create a constriction, as described in the local scour discussion below, and the Neill equation was not applied.

The Blench equation is most applicable where there is a clear water condition imposed on the stream by a reservoir or a sand and gravel pit upstream of the project location. This situation does not exist in the project area either, so the Blench equation was not applied. Initially, both equations were tested and the calculations resulted in much deeper scour depths than would reasonably be expected for a man-made flood control channel with mild slopes and relatively low design velocities. One reason for this, at least in regards the Blench equation, is that the multiplying factor 'Z' is the same for a straight reach of channel as a severe bend, in either case Z=0.6. But for a right angle bend Z=1.25. Whereas for the Lacey equation, Z= 0.25 for a straight reach, 0.50 for a moderate bend, and so on up to 1.25 for a vertical rock bank or wall.

The Lacey equation, according to the DDMMC, is more applicable to a natural river system. The equation was, however, developed for use in irrigation canals with uniform section and slope and are relatively straight. This is the most applicable of the three equations to the East Maricopa Floodway in the Higley Road bridge reach. The calculations for General Scour using the Lacey equation are included in the Appendix.

5.3.3 LOCAL SCOUR

Local scour at a bridge can be caused by three main factors, bridge piers, abutments and contraction of the channel. With the Higley Road Bridge, the abutments are not within the channel and the channel cross section does not contract due to the bridge. The channel reach upstream and downstream of the Higley Road Bridge is straight, i.e. there are no contractions or bends in the channel section. The only form of local scour that was examined was pier scour.

The methods used to analyze the pier scour at the proposed Higley Road Bridge are presented in the Federal Highway Administration's Hydraulic Engineering Circular (HEC) No. 18 publication *Evaluating Scour at Bridges.* Pier scour is a function of bed material characteristics and configuration, velocity and depth of the flow upstream and the geometry of the piers as well as well as debris accumulation on the piers. In the case of the Higley Road Bridge the following conditions apply: the pier nose shape is rounded therefore the correction factor is 1.0, the angle of attack of the flow is 0-degrees so the correction factor is 1.0, clear water scour was used since it was the most conservative and its correction factor is 1.1, armoring of the bed is an additional consideration and a correction factor of 1.0 was used as it was the most conservative. The pier width was adjusted for a debris accumulation from the actual width of two-feet to six-feet thus accounting for four-feet of debris. The Froude number of the flow at the upstream cross-section of 0.32 is an additional factor. Once all of the terms of the equation were determined the resulting scour depth due to the piers is 10.6-feet, refer to Appendix A.

5.3.4 BEND SCOUR

Bend scour was considered and investigated but was not analyzed in detail because there are no bends in the channel at the Higley Road crossing location. There is a channel bend located about 400 feet downstream of the bridge. This is not close enough to the bridge to induce scour effects to the channel lining at the bridge or bridge structure itself.

5.3.5 BED-FORM SCOUR

Bed-forms develop in response to hydraulic conditions in flowing water in alluvial systems. The EMF is not an alluvial channel; it is an engineered channel with uniform dimensions, low sediment load, low debris loads and mild slopes. The bed-form equations are not applicable to the EMF in the project reach.

5.3.6 LOW FLOW INCISEMENT

In a natural or man-made channel, a low-flow channel, or thalweg, is usually formed over time by storm flows. If the channel does not exist it is often estimated at a depth of 1-foot to 2-feet or greater, depending on conditions. In the existing EMF channel a low-flow channel has already been constructed. The depth of the low-flow channel through the project reach is 2.0 feet. All scour depths resulting from our calculations use the elevation of the low-flow channel invert as the baseline for computing scour elevations. An exhibit is included at the end of Appendix A that provides a plan and cross section from the current topography. The cross section location is directly upstream of the Higley Road Bridge and is the basis of elevation for our scour elevation estimates.

5.3.7 TOTAL SCOUR

Total scour is the sum total of all applicable forms of scour at a given location. The total 500-year scour for the bridge piers is 14.5 feet and the calculations are presented in Appendix A.

An analysis of the scour at the existing waterline within the EMF just upstream of the bridge was necessary. After meetings with the FCDMC, it was decided that the total scour using the 500-year flow was inappropriate. Therefore, a scour analysis for the 100-year flow was performed (for the waterline only). The results of the analysis show that the waterline would not be exposed by scour for the 100-year flow. These calculations are also included in Appendix A.

6 ON-SITE DRAINAGE

6.1 Background

The design of the on-site systems is in accordance with the Town of Gilbert's *Public Works and Engineering Standards and Details.* Haestad Method's FlowMaster was used to locate and size the scuppers and catch basin.

6.2 Methodology

The Rational Method was used to determine the peak onsite flows. The rational Equation relates the rainfall intensity, a runoff coefficient and the watershed size to generate the peak flow. The roadway was divided into five (5) drainage areas, three of the basins based on the proposed grades north of the bridge. The other two basins are based on the half street improvements constructed with the new commercial development. The existing scuppers on the bridge that currently drain to the EMF will

be eliminated and all this pavement drainage will go into the storm water storage trenches and basins. For the on-site street drainage, the 10-year, 50-year storm and 100-year storm events were determined for each drainage area. Per the Town of Gilbert, the 10-year storm event shall only inundate one lane of traffic per half street. The 50-year event must be contained within the street right of way and the 100-year event contained below the finished floors.

Precipitation data was determined for the entire project site, and the Depth-Duration-Frequency (DDF) and Intensity-Duration-Frequency (IDF) curves were generated. A minimum time of concentration of 10 minutes was used. A weighted runoff coefficient was determined based on the areas of pavement and landscaping. Hydrology calculations are included in Appendix B. Refer to the Drainage Areas Map, Figure 3, for the delineated drainage areas, flow paths and locations of concentration points.

For each drainage area, the flow rate, cross slope and longitudinal slope were entered into the FlowMaster, which reflects methods presented in the *Urban Drainage Design Manual, Hydraulic Engineering Circular No. 22 (HEC-22).* A value of 0.016 was used for Manning's n. Scuppers were located and sized based on the limitations of one inundated travel lane. Due to the proposed roadway improvements, the catch basin southwest of bridge installed for the commercial development will need to be relocated to the new curb. The same size of catch basin has been proposed and the street capacity calculations were analyzed to verify that the opening was sufficient to handle the flows for the new road improvements.

The curb opening catch basin is per MAG Standard Detail 533 and the concrete scuppers per MAG Standard Detail 206. The detailed curb openings and street flow calculations are included in Appendix B.

6.3 Design Criteria

The following design criteria and their applications are utilized:

- Based on MAG Standard Details 206 and 533, the gutter transition to the curb openings for a curb height of 6 inches is 2 inches. This transition represents the "local gutter depression" at the openings.

- Curb opening inlets have a reduction factor of 0.75 for sump and on-grade applications. To account for the reduction, the curb opening length used for the analysis was reduced by these factors, i.e. 25% reduction from actual length.

- The TOG drainage standards state that the 10-year event shall only inundate one lane of traffic per half street. Based on the proposed multi-lane roadway cross-section, the maximum allowable spread is 16.5-ft which represents the

outside11-foot wide lane of traffic and a 5.5-foot bike lane (measured from face of curb).

7 RETENTION REQUIREMENTS

The retention basins are designed to retain the runoff from the 10-year, 24-hour storm. The volume was computed from the formula:

$$V = D*A*C$$

Where,

V = Retention volume required (cubic feet)

D = 10-year, 24-hour rainfall depth

A = Drainage Area (square feet)

C = Weighted runoff coefficient

The weighted runoff coefficients were calculated for each drainage area based on the values stated in the TOG standards.

Based on commercial and residential improvements to the adjacent properties south of the bridge, additional retention for the half street of Higley has already been accounted for. The few County parcels along Higley Road north of the bridge have limited space for the construction of retention basins. In an attempt to limit disturbance for these parcels, required storm water storage for the street improvements fronting these parcels will be achieved through rock-filled trenches and a 12" perforated pipe. By removing the runoff from the street in catch basins and a scupper and discharging onto the gravel trench along the north improvements, the water will seep through the rock-filled trenches into the perforated pipes and be stored. Uniformly graded riprap will have a void ratio of 0.4. The volume of storage will be a combination of the void space and the 12" perforated pipe. Trenches will only need to be installed on the west side of Higley Road to achieve the required volume. One drywell will be installed to aid in the removal of the storm water within the required 36 hours based on the infiltration rate provided by Torrent Resources, the drywell provider. Retention calculations are presented in Appendix C.

8 REFERENCES

Town of Gilbert, *Public Works and Engineering Standards and Details, Article 2: Drainage Engineering.*

Flood Control District of Maricopa County, *Drainage Design Manual Volume One – Hydrology*, September 2003

Flood Control District of Maricopa County, *Drainage Design Manual Volume Two – Hydraulics*, September 2003

Federal Emergency Management Agency, *FIRM Flood Insurance Rate Map, Maricopa County, Arizona*, Map No. 04013C2690H, Revised, September 30, 2005.

HNTB Corporation, *East Maricopa Floodway Capacity Assessment Final Study Report,* FCD 97-06, January 1999, Revised February 1999.

9 FIGURES

Figure 1 Project Location Map

Figure 2 FIRM Map

Figure 3 Drainage Areas Map

10 APPENDICES

Appendix A. Off-site Drainage

Appendix B. On-site Drainage

Appendix C. Retention Calculations

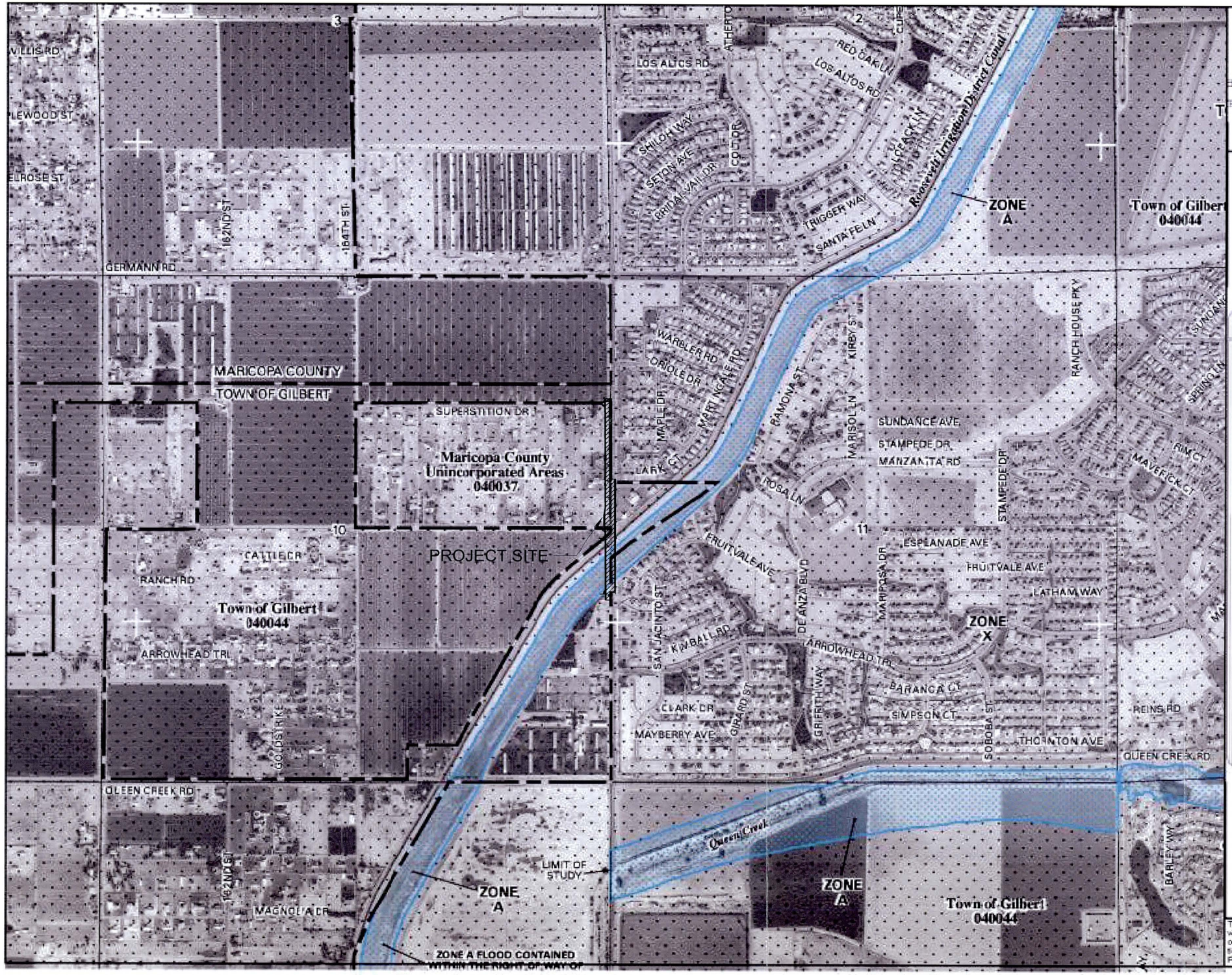

NFIP

NATIONAL FLOOD INSURANCE PROGRAM

PANEL 2690H

FIRM
FLOOD INSURANCE RATE MAP
MARICOPA COUNTY, ARIZONA
AND INCORPORATED AREAS

PANEL 2690 OF 4350

MAP NUMBER
04013C2690H
MAP REVISED
SEPTEMBER 30, 2005

Federal Emergency Management Agency

FIGURE 2: FIRM PANEL

This is an official copy of a portion of the above referenced flood map. It was extracted using F-MIT On-Line. This map does not reflect changes or amendments which may have been made subsequent to the date on the title block. For the latest product information about National Flood Insurance Program flood maps check the FEMA Flood Map Store at www.msc.fema.gov

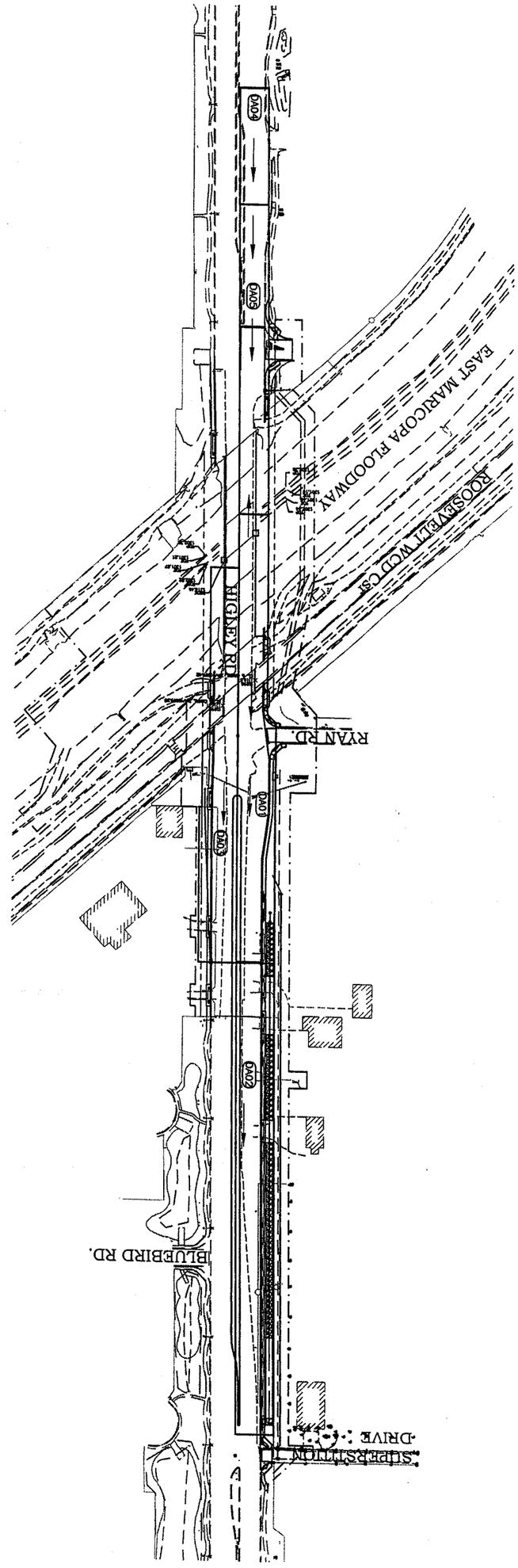

SCALE	FIGURE 3	HIGLEY ROAD – EMF TO 1370 NORTH DRAINAGE AREAS MAP GILBERT, ARIZONA	DATE: 06/12/2008	AZTEC
HORIZ. NA VERT. NA JOB NO. AZE0810				4561 E. McDowell Road Phoenix, AZ 85008-4505 Tel(602)454-0402 Fax(602)454-0403 www.aztec.us

Appendix A:

Off-Site Drainage

Base Model HEC-RAS Analysis

Adjust_Ex_for_Datum

HEC-RAS Version 3.1.3 May 2005
U.S. Army Corp of Engineers
Hydrologic Engineering Center
609 Second Street
Davis, California

```
X     X  XXXXXX    XXXX        XXXX       XX      XXXX
X     X  X        X    X      X   X     X  X    X
X     X  X        X           X   X    X    X   X
XXXXXXX  XXXX     X       XXX XXXX     XXXXXX    XXXX
X     X  X        X           X  X     X    X        X
X     X  X        X    X      X   X    X    X        X
X     X  XXXXXX    XXXX       X    X   X    X   XXXXX
```

```
*****************************************************************************
**
```

PROJECT DATA
Project Title: EMF Reach 4 (8-14-08), 97-06--Revise Ex
Project File : Adjust_Ex_for_Datum.prj
Run Date and Time: 8/28/2008 11:18:41 AM

Project in English units

Project Description:
EAST MARICOPA FLOODWAY CAPACITY ASSESSMENT (Reach 4)
FCDMC Contract No.
97-06
Prepared by HNTB Corporation, January 1999
Contact: B. Gary Sun
HNTB
Corporation
40 North Central Avenue, Suite 300
Phoenix, Arizona 85004
(602)
528-4300

Revised by Aztec, April 2008 to run input 0.1' for the Distance
Value
and subtracted 0.5-feet from the deck width to get the model to
run.
Contact: Sarah Smedley
Aztec
4561 E. McDowell Rd
Phoenix, AZ
85008
602-458-9369

REACH 4
From 1.081 miles north of the Higley Road
Bridge to Queen Creek Road
(River Mile 15.035 to Mile 13.471)

The Purpose
of the Study is to Determine Channel Capacity for Design 100-Year
Discharge.
The Water Surface Profile Was Calculated Using the U.S. Army Corps
of Engineers' HEC-RAS Computer Program, Version 3.1.3, Dated May 2005.

Subcritical Flow Run
Water Surface Profile with 100-Year Discharge Provided
by FCDMC (Dated 6-10-98)

Profile 1 - Design Discharges

The Control Line on
the Thalweg of East Maricopa Floodway is Station 5,000, and All Cross Section
Data were Stationed Looking Downstream. Cross Section Numbers Indicate in River
Miles above the Top of Drop Structure at the Downstream of the East Maricopa Floodway.

Starting Water Surface Elevations Used are the Calculated
Water Surface Elevations from Each of Three Water Surface Profiles Calculated
at River Mile 13.471 from Reach 3 HEC-RAS Runs.

****
**

PLAN DATA

Plan Title: Existing EMF Reach 4
Plan File :
r:\Phoenix\Projects\AZE0810_Higley-DB\Technical\Drainage\HEC-RAS\Adjust_Ex_for_Datum.p01

Geometry Title: EMF Reach 4
Geometry File :
r:\Phoenix\Projects\AZE0810_Higley-DB\Technical\Drainage\HEC-RAS\Adjust_Ex_for_Datum.g01

Flow Title : Profiles 1-Design, 2-Future, 3-Exist
Flow File :
r:\Phoenix\Projects\AZE0810_Higley-DB\Technical\Drainage\HEC-RAS\Adjust_Ex_for_Datum.f01

Plan Summary Information:

Number of:	Cross Sections	= 19	Multiple Openings	=	0
	Culverts	= 0	Inline Structures	=	0
	Bridges	= 1	Lateral Structures	=	0

Computational Information

Water surface calculation tolerance	=	0.01
Critical depth calculation tolerance	=	0.01
Maximum number of iterations	=	20
Maximum difference tolerance	=	0.3
Flow tolerance factor	=	0.001

Computation Options

Critical depth computed only where necessary	
Conveyance Calculation Method:	At breaks in n values only
Friction Slope Method:	Average Conveyance
Computational Flow Regime:	Subcritical Flow

****
**

FLOW DATA

Flow Title: Profiles 1-Design, 2-Future, 3-Exist
Flow File :
r:\Phoenix\Projects\AZE0810_Higley-DB\Technical\Drainage\HEC-RAS\Adjust_Ex_for_Datum.f01

Flow Data (cfs)
****

```
*******************************
* River          Reach          RS      *          Design          Future
    Existing            PF 4 *
* EMF            Reach 4        15.035  *            6900            8770
       12750           11730 *
* EMF            Reach 4        14.637  *            6900            8890
       12830           11730 *
* EMF            Reach 4        13.471  *            6900            8970
       12910           11730 *
*******************************************************************************
*******************************

Boundary Conditions
*******************************************************************************
**************************
* River          Reach          Profile          *            Upstream
         Downstream    *
*******************************************************************************
**************************
* EMF            Reach 4        Design           *       Known WS = 1315.68
     Known WS = 1309.89 *
* EMF            Reach 4        Future           *             Known WS = 0
      Known WS = 1311.2 *
* EMF            Reach 4        Existing         *             Known WS = 0
     Known WS = 1313.18 *
* EMF            Reach 4        PF 4             *             Known WS = 0
     Known WS = 1313.18 *
*******************************************************************************
**************************

*******************************************************************************
**

GEOMETRY DATA

Geometry Title: EMF Reach 4
Geometry File :
r:\Phoenix\Projects\AZE0810_Higley-DB\Technical\Drainage\HEC-RAS\Adjust_Ex_for
_Datum.g01

CROSS SECTION


RIVER: EMF
REACH: Reach 4            RS: 15.035

INPUT
Description: All elevations adjusted up 2.12' for datum change
Station Elevation Data    num=      46
     Sta    Elev     Sta    Elev     Sta    Elev     Sta    Elev     Sta
Elev
*******************************************************************************
**
 3705.97 1321.84  3713.4 1321.53 3738.74 1320.74 3776.67  1320.8  3819.2
1320.92
 3955.75 1320.58 4040.64 1320.59 4069.35 1320.48 4114.46  1320.2 4182.97
1320.02
 4262.09 1319.61 4296.59 1319.41  4335.9 1319.32 4411.86 1319.06  4523.8
1318.92
  4619.5 1318.75  4637.4 1318.68 4658.35 1318.68 4751.02 1318.56    4777
1318.12
 4790.45 1317.65 4798.95 1318.48 4808.42 1318.48 4851.64 1318.19 4852.81
1318.82
  4855.6 1318.27 4863.77 1317.74 4874.96 1318.19 4879.92 1319.62 4892.66
1319.62
 4903.41 1316.62 4928.29 1309.79 4955.37 1309.53 4978.24 1309.12 4991.56
```

```
1309.12
 5000.55 1308.99 5020.31    1309 5071.55 1309.12 5074.58 1309.58 5082.83
1312.42
 5107.43 1319.53 5118.41 1319.87 5122.89 1318.92 5158.53 1319.16 5169.23
1320.72
 5183.62 1321.55

Manning's n Values          num=        3
     Sta   n Val      Sta   n Val      Sta   n Val
**********************************************
 3705.97     .04 4892.66    .025 5107.43     .04

Bank Sta: Left   Right    Lengths: Left Channel   Right     Coeff Contr.
Expan.
       4892.66 5107.43            574.6   574.6   574.6             .1
.3
Left Levee      Station= 4892.66      Elevation= 1319.62
Right Levee     Station= 5118.41      Elevation= 1319.87

CROSS SECTION OUTPUT  Profile #Design
*****************************************************************************
*****************
* E.G. Elev (ft)          * 1318.14  * Element                 *  Left OB *
Channel * Right OB *
* Vel Head (ft)           *    0.34  * Wt. n-Val.              *          *
0.025  *          *
* W.S. Elev (ft)          * 1317.80  * Reach Len. (ft)         *  574.60  *
574.60  *  574.60  *
* Crit W.S. (ft)          * 1313.25  * Flow Area (sq ft)       *          *
1478.37  *          *
* E.G. Slope (ft/ft)      *0.000441  * Area (sq ft)            *          *
1478.37  *          *
* Q Total (cfs)           * 6900.00  * Flow (cfs)              *          *
6900.00  *          *
* Top Width (ft)          *  202.24  * Top Width (ft)          *          *
202.24  *          *
* Vel Total (ft/s)        *    4.67  * Avg. Vel. (ft/s)        *          *
4.67  *          *
* Max Chl Dpth (ft)       *    8.81  * Hydr. Depth (ft)        *          *
7.31  *          *
* Conv. Total (cfs)       *328413.2  * Conv. (cfs)             *
*328413.2  *          *
* Length Wtd. (ft)        *  574.60  * Wetted Per. (ft)        *          *
204.60  *          *
* Min Ch El (ft)          * 1308.99  * Shear (lb/sq ft)        *          *
0.20  *          *
* Alpha                   *    1.00  * Stream Power (lb/ft s) *          *
0.93  *          *
* Frctn Loss (ft)         *    0.24  * Cum Volume (acre-ft)    *          *
272.16  *          *
* C & E Loss (ft)         *    0.01  * Cum SA (acres)          *          *
37.92  *          *
*****************************************************************************
*****************

Note:    Multiple critical depths were found at this location.  The critical
depth with the lowest, valid,
         water surface was used.

CROSS SECTION OUTPUT  Profile #PF 4
*****************************************************************************
*****************
* E.G. Elev (ft)          * 1321.17  * Element                 *  Left OB *
Channel * Right OB *
* Vel Head (ft)           *    0.33  * Wt. n-Val.              *   0.040  *
0.025  *   0.040  *
```

```
* W.S. Elev (ft)          * 1320.84  * Reach Len. (ft)        *  574.60  *
574.60  *  574.60  *
* Crit W.S. (ft)          * 1314.90  * Flow Area (sq ft)      * 1463.72  *
2120.16  *   92.74  *
* E.G. Slope (ft/ft)      *0.000328  * Area (sq ft)           * 1463.72  *
2120.16  *   92.74  *
* Q Total (cfs)           *11730.00  * Flow (cfs)             * 1232.99
*10417.11  *   79.89  *
* Top Width (ft)          * 1373.28  * Top Width (ft)         * 1094.67  *
214.77  *   63.84  *
* Vel Total (ft/s)        *    3.19  * Avg. Vel. (ft/s)       *    0.84  *
4.91  *    0.86  *
* Max Chl Dpth (ft)       *   11.85  * Hydr. Depth (ft)       *    1.34  *
9.87  *    1.45  *
* Conv. Total (cfs)       *647266.9  * Conv. (cfs)            * 68037.1
*574821.2  *  4408.6  *
* Length Wtd. (ft)        *  574.60  * Wetted Per. (ft)       * 1095.17  *
217.62  *   64.06  *
* Min Ch El (ft)          * 1308.99  * Shear (lb/sq ft)       *    0.03  *
0.20  *    0.03  *
* Alpha                   *    2.11  * Stream Power (lb/ft s) *    0.02  *
0.98  *    0.03  *
* Frctn Loss (ft)         *    0.18  * Cum Volume (acre-ft)   *  123.17  *
395.47  *   12.17  *
* C & E Loss (ft)         *    0.01  * Cum SA (acres)         *   94.10  *
40.96  *    8.89  *
*******************************************************************************
*****************

Warning: Divided flow computed for this cross-section.
Note:    Multiple critical depths were found at this location.  The critical
depth with the lowest, valid,
         water surface was used.

CROSS SECTION


RIVER: EMF
REACH: Reach 4            RS: 14.926

INPUT
Description: All elevations adjusted up 2.12' for datum change
Station Elevation Data    num=      36
     Sta    Elev     Sta    Elev     Sta    Elev     Sta    Elev     Sta
Elev
*******************************************************************************
**
 3721.04 1321.44 3759.55 1321.23 3788.85 1321.17 3873.17 1321.07 3917.44
1321.22
 3986.79 1320.82 3999.54  1320.8 4100.39 1320.42 4138.86 1320.24 4218.39
1319.82
 4327.61 1319.19 4441.22 1318.99 4507.93 1318.87 4554.83 1318.76 4581.74
1318.62
 4668.45 1318.25 4729.37 1318.12 4782.05 1317.82 4849.61 1317.64 4853.45
1318.22
 4857.68 1317.76 4862.84 1317.62 4880.37 1318.84 4893.22 1318.83 4902.24
1316.32
 4927.71 1309.35 4976.94  1308.8  5006.8  1308.4 5037.93 1308.42  5071.9
1308.72
 5107.23 1319.77 5119.72 1319.12 5123.11  1318.4 5159.52 1318.48 5170.49
1320.22
 5183.69 1320.44

Manning's n Values        num=       3
     Sta   n Val     Sta   n Val     Sta   n Val
***********************************************
```

```
 3721.04     .04 4893.22     .025 5107.23     .04

Bank Sta: Left   Right    Lengths: Left Channel   Right     Coeff Contr.
Expan.
      4893.22 5107.23              915  545.66     470            .1
.3
Left Levee      Station= 4893.22      Elevation= 1318.83
Right Levee     Station= 5107.23      Elevation= 1319.77

CROSS SECTION OUTPUT  Profile #Design
*****************************************************************************
*****************
* E.G. Elev (ft)          * 1317.89  * Element                 *  Left OB *
Channel * Right OB *
* Vel Head (ft)           *    0.32  * Wt. n-Val.              *          *
0.025  *          *
* W.S. Elev (ft)          * 1317.57  * Reach Len. (ft)         *  915.00  *
545.66  *  470.00  *
* Crit W.S. (ft)          * 1312.76  * Flow Area (sq ft)       *          *
1525.79  *          *
* E.G. Slope (ft/ft)      *0.000398  * Area (sq ft)            *          *
1525.79  *          *
* Q Total (cfs)           * 6900.00  * Flow (cfs)              *          *
6900.00  *          *
* Top Width (ft)          *  202.46  * Top Width (ft)          *          *
202.46  *          *
* Vel Total (ft/s)        *    4.52  * Avg. Vel. (ft/s)        *          *
4.52  *          *
* Max Chl Dpth (ft)       *    9.17  * Hydr. Depth (ft)        *          *
7.54  *          *
* Conv. Total (cfs)       *345794.4  * Conv. (cfs)             *
*345794.4  *          *
* Length Wtd. (ft)        *  545.66  * Wetted Per. (ft)        *          *
204.92  *          *
* Min Ch El (ft)          * 1308.40  * Shear (lb/sq ft)        *          *
0.19  *          *
* Alpha                   *    1.00  * Stream Power (lb/ft s)  *          *
0.84  *          *
* Frctn Loss (ft)         *    0.22  * Cum Volume (acre-ft)    *          *
252.35  *          *
* C & E Loss (ft)         *    0.00  * Cum SA (acres)          *          *
35.25  *          *
*****************************************************************************
*****************

Note:    Multiple critical depths were found at this location.  The critical
depth with the lowest, valid,
         water surface was used.

CROSS SECTION OUTPUT  Profile #PF 4
*****************************************************************************
*****************
* E.G. Elev (ft)          * 1320.99  * Element                 *  Left OB *
Channel * Right OB *
* Vel Head (ft)           *    0.31  * Wt. n-Val.              *   0.040  *
0.025  *   0.040  *
* W.S. Elev (ft)          * 1320.68  * Reach Len. (ft)         *  915.00  *
545.66  *  470.00  *
* Crit W.S. (ft)          * 1314.41  * Flow Area (sq ft)       * 1430.20  *
2179.68  *  122.40  *
* E.G. Slope (ft/ft)      *0.000294  *.Area (sq ft)            * 1430.20  *
2179.68  *  122.40  *
* Q Total (cfs)           *11730.00  * Flow (cfs)              * 1278.28
*10345.43  *  106.29  *
* Top Width (ft)          * 1151.24  * Top Width (ft)          *  860.77  *
214.01  *   76.46  *
```

```
* Vel Total (ft/s)        *    3.14  * Avg. Vel. (ft/s)        *    0.89  *
4.75  *    0.87  *
* Max Chl Dpth (ft)       *   12.28  * Hydr. Depth (ft)        *    1.66  *
10.18  *    1.60  *
* Conv. Total (cfs)       *683870.5  * Conv. (cfs)             * 74524.8
*603148.7  *  6197.0  *
* Length Wtd. (ft)        *  606.15  * Wetted Per. (ft)        *  860.88  *
216.98  *   76.93  *
* Min Ch El (ft)          * 1308.40  * Shear (lb/sq ft)        *    0.03  *
0.18  *    0.03  *
* Alpha                   *    2.02  * Stream Power (lb/ft s) *    0.03  *
0.88  *    0.03  *
* Frctn Loss (ft)         *    0.16  * Cum Volume (acre-ft)    *  104.08  *
367.11  *   10.75  *
* C & E Loss (ft)         *    0.03  * Cum SA (acres)          *   81.21  *
38.13  *    7.96  *
*******************************************************************************
*****************

Warning: The cross-section end points had to be extended vertically for the
computed water surface.
Note:    Multiple critical depths were found at this location.  The critical
depth with the lowest, valid,
         water surface was used.

CROSS SECTION


RIVER: EMF
REACH: Reach 4            RS: 14.823

INPUT
Description: All elevations adjusted up 2.12' for datum change
Station Elevation Data     num=      39
     Sta    Elev     Sta    Elev     Sta    Elev     Sta    Elev     Sta
Elev
*******************************************************************************
**
 3552.69  1320.4 3674.44  1319.1 3717.53 1318.96 3761.03 1318.73 3874.01
1318.72
    3987 1318.66 4059.23 1318.59    4100 1318.58 4212.99 1318.46 4231.23
1318.42
 4325.97 1318.35 4429.45 1318.16  4503.5 1318.05 4551.96 1318.04 4577.54
1318.12
 4664.95 1317.94 4707.96  1317.7 4777.93 1317.42 4809.95 1317.57 4849.69
1318.32
 4852.62 1318.94 4855.68 1318.18 4862.67  1317.6 4871.34  1319.4 4891.15
1319.62
 4903.39 1315.83 4926.14 1309.25 4941.88 1308.85 4979.02 1308.51 5002.17
1308.52
 5013.27 1308.62 5038.64 1308.65 5070.05 1308.65 5109.75 1319.64 5128.17
1319.12
 5131.51 1318.56  5159.5 1318.63 5172.07 1320.21 5184.52 1321.27

Manning's n Values        num=       3
     Sta   n Val     Sta   n Val     Sta   n Val
*********************************************
 3552.69     .04 4891.15    .025 5109.75     .04

Bank Sta: Left   Right    Lengths: Left Channel   Right     Coeff Contr.
Expan.
       4891.15 5109.75           311.48  311.48  311.48             .1
.3
Left Levee      Station= 4891.15      Elevation= 1319.62
Right Levee     Station= 5109.75      Elevation= 1319.64
```

CROSS SECTION OUTPUT Profile #Design

```
*****************************************************************************
*****************
* E.G. Elev (ft)          * 1317.66  * Element                 *  Left OB *
Channel * Right OB *
* Vel Head (ft)           *    0.33  * Wt. n-Val.               *          *
0.025  *          *
* W.S. Elev (ft)          * 1317.33  * Reach Len. (ft)          *  311.48  *
311.48  *  311.48  *
* Crit W.S. (ft)          * 1312.72  * Flow Area (sq ft)        *          *
1495.29  *          *
* E.G. Slope (ft/ft)      *0.000427  * Area (sq ft)             *          *
1495.29  *          *
* Q Total (cfs)           * 6900.00  * Flow (cfs)               *          *
6900.00  *          *
* Top Width (ft)          *  202.88  * Top Width (ft)           *          *
202.88  *          *
* Vel Total (ft/s)        *    4.61  * Avg. Vel. (ft/s)         *          *
4.61  *          *
* Max Chl Dpth (ft)       *    8.82  * Hydr. Depth (ft)         *          *
7.37  *          *
* Conv. Total (cfs)       *334028.3  * Conv. (cfs)              *
*334028.3  *          *
* Length Wtd. (ft)        *  311.48  * Wetted Per. (ft)         *          *
205.22  *          *
* Min Ch El (ft)          * 1308.51  * Shear (lb/sq ft)         *          *
0.19  *          *
* Alpha                   *    1.00  * Stream Power (lb/ft s)   *          *
0.90  *          *
* Frctn Loss (ft)         *    0.13  * Cum Volume (acre-ft)     *          *
233.43  *          *
* C & E Loss (ft)         *    0.00  * Cum SA (acres)           *          *
32.71  *          *
*****************************************************************************
*****************
```

Note: Multiple critical depths were found at this location. The critical depth with the lowest, valid,
water surface was used.

CROSS SECTION OUTPUT Profile #PF 4

```
*****************************************************************************
*****************
* E.G. Elev (ft)          * 1320.80  * Element                 *  Left OB *
Channel * Right OB *
* Vel Head (ft)           *    0.21  * Wt. n-Val.               *   0.040  *
0.025  *   0.040  *
* W.S. Elev (ft)          * 1320.59  * Reach Len. (ft)          *  311.48  *
311.48  *  311.48  *
* Crit W.S. (ft)          * 1314.36  * Flow Area (sq ft)        * 2819.58  *
2189.41  *   99.55  *
* E.G. Slope (ft/ft)      *0.000228  * Area (sq ft)             * 2819.58  *
2189.41  *   99.55  *
* Q Total (cfs)           *11730.00  * Flow (cfs)               * 2600.87  *
9056.32  *   72.81  *
* Top Width (ft)          * 1623.85  * Top Width (ft)           * 1338.46  *
218.60  *   66.79  *
* Vel Total (ft/s)        *    2.30  * Avg. Vel. (ft/s)         *    0.92  *
4.14  *    0.73  *
* Max Chl Dpth (ft)       *   12.08  * Hydr. Depth (ft)         *    2.11  *
10.02  *    1.49  *
* Conv. Total (cfs)       *776055.0  * Conv. (cfs)              *172073.2
*599164.4  *  4817.3  *
* Length Wtd. (ft)        *  311.48  * Wetted Per. (ft)         * 1339.04  *
221.61  *   66.96  *
* Min Ch El (ft)          * 1308.51  * Shear (lb/sq ft)         *    0.03  *
```

```
0.14  *    0.02  *
* Alpha                    *    2.54  * Stream Power (lb/ft s) *    0.03  *
0.58  *    0.02  *
* Frctn Loss (ft)          *    0.06  * Cum Volume (acre-ft)   *   59.45  *
339.75  *    9.56  *
* C & E Loss (ft)          *    0.01  * Cum SA (acres)         *   58.11  *
35.42  *    7.19  *
*******************************************************************************
*****************

Warning: The cross-section end points had to be extended vertically for the
computed water surface.
Note:    Multiple critical depths were found at this location.  The critical
depth with the lowest, valid,
         water surface was used.

CROSS SECTION


RIVER: EMF
REACH: Reach 4            RS: 14.764

INPUT
Description: Upstream End of 70' Wide Low Drop Structure. All elevations
             adjusted up 2.12' for datum change
Station Elevation Data    num=      48
     Sta    Elev     Sta    Elev     Sta    Elev     Sta    Elev     Sta
Elev
*******************************************************************************
**
 3422.47 1320.12 3524.94 1319.03 3567.37 1318.89 3570.53 1319.22 3571.59
1318.92
 3644.85 1318.66 3666.31  1318.7 3740.35 1318.44 3819.18 1318.37 3924.87
1318.22
 3962.47 1318.24 4042.17 1318.11 4150.85 1317.97 4248.78 1317.96 4376.83
1317.72
 4406.74 1317.68 4489.82 1317.61  4518.9 1317.66 4678.42 1317.77 4715.79
1317.72
 4763.52 1317.41 4821.84 1317.09    4833 1317.44 4835.29 1317.78 4850.37
1317.92
 4853.04 1318.56 4855.73 1318.07 4864.53 1317.64 4878.42 1318.93 4891.75
1318.92
 4911.38 1313.19 4924.49 1309.02 4928.62 1308.91 4953.96 1308.54 4967.95
1308.42
  5001.7 1308.62 5010.45 1308.57 5049.66 1308.68 5056.31    1309 5077.43
1309.72
 5080.37  1309.8 5090.21 1312.78 5106.85 1319.72 5120.15 1319.51 5124.07
1318.02
 5159.53 1318.94 5168.49 1320.29 5183.77 1321.03

Manning's n Values        num=       3
     Sta   n Val     Sta   n Val     Sta   n Val
*********************************************
 3422.47     .04 4891.75    .025 5106.85     .04

Bank Sta: Left   Right    Lengths: Left Channel   Right     Coeff Contr.
Expan.
       4891.75 5106.85            52.59   52.59   52.59             .1
.3
Left Levee      Station= 4891.75      Elevation= 1318.92
Right Levee     Station= 5106.85      Elevation= 1319.72

CROSS SECTION OUTPUT  Profile #Design
*******************************************************************************
*****************
* E.G. Elev (ft)         * 1317.53  * Element                 *  Left OB *
```

```
Channel * Right OB *
* Vel Head (ft)          *    0.32  * Wt. n-Val.              *          *
0.025  *          *
* W.S. Elev (ft)         * 1317.21  * Reach Len. (ft)         *   52.59  *
52.59  *   52.59  *
* Crit W.S. (ft)         * 1312.64  * Flow Area (sq ft)       *          *
1508.36  *          *
* E.G. Slope (ft/ft)     *0.000416  * Area (sq ft)            *          *
1508.36  *          *
* Q Total (cfs)          * 6900.00  * Flow (cfs)              *          *
6900.00  *          *
* Top Width (ft)         *  203.20  * Top Width (ft)          *          *
203.20  *          *
* Vel Total (ft/s)       *    4.57  * Avg. Vel. (ft/s)        *          *
4.57  *          *
* Max Chl Dpth (ft)      *    8.79  * Hydr. Depth (ft)        *          *
7.42  *          *
* Conv. Total (cfs)      *338303.6  * Conv. (cfs)             *
*338303.6  *          *
* Length Wtd. (ft)       *   52.59  * Wetted Per. (ft)        *          *
205.77  *          *
* Min Ch El (ft)         * 1308.42  * Shear (lb/sq ft)        *          *
0.19  *          *
* Alpha                  *    1.00  * Stream Power (lb/ft s) *          *
0.87  *          *
* Frctn Loss (ft)        *    0.05  * Cum Volume (acre-ft)    *          *
222.69  *          *
* C & E Loss (ft)        *    0.22  * Cum SA (acres)          *          *
31.26  *          *
*******************************************************************************
*****************

Warning: The velocity head has changed by more than 0.5 ft (0.15 m).  This may
indicate the need for
         additional cross sections.
Warning: The conveyance ratio (upstream conveyance divided by downstream
conveyance) is less than
         0.7 or greater than 1.4.  This may indicate the need for additional
cross sections.
Note:    Multiple critical depths were found at this location.  The critical
depth with the lowest, valid,
         water surface was used.

CROSS SECTION OUTPUT  Profile #PF 4
*******************************************************************************
*****************
* E.G. Elev (ft)         * 1320.72  * Element                *  Left OB *
Channel * Right OB *
* Vel Head (ft)          *    0.17  * Wt. n-Val.              *   0.040  *
0.025  *   0.040  *
* W.S. Elev (ft)         * 1320.56  * Reach Len. (ft)         *   52.59  *
52.59  *   52.59  *
* Crit W.S. (ft)         * 1314.22  * Flow Area (sq ft)       * 3531.03  *
2216.42  *  102.29  *
* E.G. Slope (ft/ft)     *0.000187  * Area (sq ft)            * 3531.03  *
2216.42  *  102.29  *
* Q Total (cfs)          *11730.00  * Flow (cfs)              * 3217.37  *
8444.08  *   68.55  *
* Top Width (ft)         * 1751.51  * Top Width (ft)          * 1469.28  *
215.10  *   67.13  *
* Vel Total (ft/s)       *    2.01  * Avg. Vel. (ft/s)        *    0.91  *
3.81  *    0.67  *
* Max Chl Dpth (ft)      *   12.14  * Hydr. Depth (ft)        *    2.40  *
10.30  *    1.52  *
* Conv. Total (cfs)      *857739.8  * Conv. (cfs)             *235265.7
*617461.7  *  5012.4  *
```

```
* Length Wtd. (ft)        *   52.59  * Wetted Per. (ft)       * 1470.01  *
218.42  *   67.52  *
* Min Ch El (ft)          * 1308.42  * Shear (lb/sq ft)       *    0.03  *
0.12  *    0.02  *
* Alpha                   *    2.66  * Stream Power (lb/ft s) *    0.03  *
0.45  *    0.01  *
* Frctn Loss (ft)         *    0.03  * Cum Volume (acre-ft)   *   36.74  *
324.00  *    8.84  *
* C & E Loss (ft)         *    0.32  * Cum SA (acres)         *   48.07  *
33.87  *    6.71  *
*****************************************************************************
*****************

Warning: The cross-section end points had to be extended vertically for the
computed water surface.
Warning: The velocity head has changed by more than 0.5 ft (0.15 m).  This may
indicate the need for
         additional cross sections.
Warning: The conveyance ratio (upstream conveyance divided by downstream
conveyance) is less than
         0.7 or greater than 1.4.  This may indicate the need for additional
cross sections.
Note:    Multiple critical depths were found at this location.  The critical
depth with the lowest, valid,
         water surface was used.

CROSS SECTION


RIVER: EMF
REACH: Reach 4            RS: 14.754

INPUT
Description: Wier Crest of 70' Wide Low Drop Structure. All elevations
adjusted
             up 2.12' for datum change
Station Elevation Data    num=      50
     Sta    Elev     Sta    Elev     Sta    Elev     Sta    Elev     Sta
Elev
*****************************************************************************
**
 3400.48 1320.08 3499.69 1319.02 3547.73 1318.86 3551.31 1319.23 3552.51
1318.92
 3622.02 1318.65 3649.96  1318.7 3726.55 1318.41 3839.53 1318.23 3973.09
1318.12
 4065.51 1318.03 4148.82 1317.93 4211.45 1317.82 4363.61  1317.6 4404.48
1317.62
 4449.81 1317.58 4517.47 1317.55 4578.45 1317.66 4630.46 1317.71 4743.44
1317.62
 4782.29 1317.32 4829.36 1316.95 4834.13 1317.67 4849.85 1317.93 4853.18
1318.82
 4864.53 1317.56 4877.11 1319.12 4914.93 1319.23 4922.02 1319.11 4927.71
1318.72
 4936.21 1318.79 4954.85 1312.18 4959.83 1310.85 4965.99 1308.74 4998.87
1308.62
  5021.8 1308.57 5035.55 1308.44 5041.61 1310.53  5049.5 1312.78 5062.21
1318.32
 5065.12 1319.04 5078.45 1319.05 5090.06 1319.61 5096.42 1319.73 5109.24
1319.82
 5119.37 1319.55 5122.93 1318.21 5156.46 1318.96 5169.34 1319.99 5184.16
1320.72

Manning's n Values        num=       3
     Sta   n Val     Sta   n Val     Sta   n Val
*********************************************
 3400.48     .04 4936.21    .025 5065.12     .04
```

```
Bank Sta: Left   Right    Lengths: Left Channel   Right     Coeff Contr.
Expan.
       4936.21 5065.12            87.83   87.83   87.83            .1
.3
Left Levee      Station= 4914.93      Elevation= 1319.23
Right Levee     Station= 5109.24      Elevation= 1319.82

CROSS SECTION OUTPUT  Profile #Design
*******************************************************************************
*****************
* E.G. Elev (ft)          * 1317.25  * Element                 *  Left OB *
Channel * Right OB *
* Vel Head (ft)           *    2.55  * Wt. n-Val.              *          *
0.025  *          *
* W.S. Elev (ft)          * 1314.71  * Reach Len. (ft)         *   87.83  *
87.83  *   87.83  *
* Crit W.S. (ft)          * 1314.71  * Flow Area (sq ft)       *          *
538.66  *          *
* E.G. Slope (ft/ft)      *0.005465  * Area (sq ft)            *          *
538.66  *          *
* Q Total (cfs)           * 6900.00  * Flow (cfs)              *          *
6900.00  *          *
* Top Width (ft)          *  106.19  * Top Width (ft)          *          *
106.19  *          *
* Vel Total (ft/s)        *   12.81  * Avg. Vel. (ft/s)        *          *
12.81  *          *
* Max Chl Dpth (ft)       *    6.27  * Hydr. Depth (ft)        *          *
5.07  *          *
* Conv. Total (cfs)       * 93334.2  * Conv. (cfs)             *          *
93334.2  *          *
* Length Wtd. (ft)        *   87.83  * Wetted Per. (ft)        *          *
108.22  *          *
* Min Ch El (ft)          * 1308.44  * Shear (lb/sq ft)        *          *
1.70  *          *
* Alpha                   *    1.00  * Stream Power (lb/ft s)  *          *
21.75  *          *
* Frctn Loss (ft)         *    0.13  * Cum Volume (acre-ft)    *          *
221.45  *          *
* C & E Loss (ft)         *    0.61  * Cum SA (acres)          *          *
31.07  *          *
*******************************************************************************
*****************

Warning: The energy equation could not be balanced within the specified number
of iterations.  The
         program used critical depth for the water surface and continued on
with the calculations.
Warning: The velocity head has changed by more than 0.5 ft (0.15 m).  This may
indicate the need for
         additional cross sections.
Warning: The conveyance ratio (upstream conveyance divided by downstream
conveyance) is less than
         0.7 or greater than 1.4.  This may indicate the need for additional
cross sections.
Warning: The energy loss was greater than 1.0 ft (0.3 m). between the current
and previous cross
         section.  This may indicate the need for additional cross sections.
Warning: During the standard step iterations, when the assumed water surface
was set equal to critical
         depth, the calculated water surface came back below critical depth.
This indicates that there
         is not a valid subcritical answer.  The program defaulted to critical
depth.
Note:    Multiple critical depths were found at this location.  The critical
depth with the lowest, valid,
```

water surface was used.

CROSS SECTION OUTPUT Profile #PF 4

```
*****************************************************************************
*****************
* E.G. Elev (ft)          * 1320.38  * Element                 *  Left OB *
Channel * Right OB *
* Vel Head (ft)           *    3.36  * Wt. n-Val.              *          *
0.025  *          *
* W.S. Elev (ft)          * 1317.02  * Reach Len. (ft)         *   87.83  *
87.83  *   87.83  *
* Crit W.S. (ft)          * 1317.02  * Flow Area (sq ft)       *          *
797.59  *          *
* E.G. Slope (ft/ft)      *0.004949  * Area (sq ft)            *          *
797.59  *          *
* Q Total (cfs)           *11730.00  * Flow (cfs)              *
*11730.00  *          *
* Top Width (ft)          *  118.01  * Top Width (ft)           *          *
118.01  *          *
* Vel Total (ft/s)        *   14.71  * Avg. Vel. (ft/s)         *          *
14.71  *          *
* Max Chl Dpth (ft)       *    8.58  * Hydr. Depth (ft)         *          *
6.76  *          *
* Conv. Total (cfs)       *166740.4  * Conv. (cfs)              *
*166740.4  *          *
* Length Wtd. (ft)        *   87.83  * Wetted Per. (ft)         *          *
120.91  *          *
* Min Ch El (ft)          * 1308.44  * Shear (lb/sq ft)         *          *
2.04  *          *
* Alpha                   *    1.00  * Stream Power (lb/ft s)   *          *
29.97  *          *
* Frctn Loss (ft)         *    0.13  * Cum Volume (acre-ft)     *   34.61  *
322.18  *    8.77  *
* C & E Loss (ft)         *    0.79  * Cum SA (acres)           *   47.18  *
33.67  *    6.67  *
*****************************************************************************
*****************
```

Warning: The energy equation could not be balanced within the specified number of iterations. The
program used critical depth for the water surface and continued on with the calculations.
Warning: The velocity head has changed by more than 0.5 ft (0.15 m). This may indicate the need for
additional cross sections.
Warning: The conveyance ratio (upstream conveyance divided by downstream conveyance) is less than
0.7 or greater than 1.4. This may indicate the need for additional cross sections.
Warning: The energy loss was greater than 1.0 ft (0.3 m). between the current and previous cross
section. This may indicate the need for additional cross sections.
Warning: During the standard step iterations, when the assumed water surface was set equal to critical
depth, the calculated water surface came back below critical depth. This indicates that there
is not a valid subcritical answer. The program defaulted to critical depth.
Note: Multiple critical depths were found at this location. The critical depth with the lowest, valid,
water surface was used.

CROSS SECTION

RIVER: EMF

```
REACH: Reach 4          RS: 14.738

INPUT
Description: Downstream End of 70' Wide Low Drop Structure. All elevations
             adjusted up 2.12' for datum change
Station Elevation Data    num=      60
     Sta    Elev     Sta    Elev     Sta    Elev     Sta    Elev     Sta
Elev
*****************************************************************************
**
 3363.76    1320 3457.54    1319 3514.95 1318.81 3519.23 1319.26 3520.66
1318.82
  3583.9 1318.62 3622.68 1318.69 3687.41 1318.45 3696.73 1318.45 3703.17
1318.62
 3726.82  1318.3 3772.74 1318.07 3885.72 1318.04 3998.71 1317.96 4066.94
1317.92
 4111.71 1317.76 4140.99  1317.7 4196.67 1317.55 4255.81 1317.55 4337.68
1317.62
 4411.46 1317.62 4450.67 1317.58 4511.21 1317.45 4563.67 1317.42 4676.64
1317.52
 4789.64 1317.33 4818.76 1317.19 4830.01 1317.04 4834.78 1317.77  4850.4
1318.12
 4856.05 1318.01 4865.15 1316.64 4873.08 1317.72 4877.36 1318.12 4889.59
1318.36
 4903.47 1318.81 4909.72 1316.72 4916.23 1313.84 4938.22 1306.72 4940.73
1306.42
 4947.04 1304.55 4966.63 1304.54 4983.02 1304.57 4993.81 1304.82 4999.54
1304.87
 5014.94 1304.63 5033.25 1304.61    5045 1304.69 5049.38 1304.62 5054.09
1304.79
 5060.35 1305.32  5063.2 1305.73 5073.86 1309.87 5085.66 1313.52 5097.92
1318.81
 5120.78 1318.52 5124.39 1317.29 5152.73 1317.53 5170.68 1319.32 5184.65
1320.59

Manning's n Values        num=       3
     Sta   n Val     Sta   n Val     Sta   n Val
*************************************************
 3363.76     .04 4903.47    .025 5097.92     .04

Bank Sta: Left   Right    Lengths: Left Channel   Right     Coeff Contr.
Expan.
       4903.47 5097.92           528.63  528.63  528.63             .1
.3
Left Levee      Station= 4903.47      Elevation= 1318.81
Right Levee     Station= 5097.92      Elevation= 1318.81

CROSS SECTION OUTPUT  Profile #Design
*****************************************************************************
*****************
* E.G. Elev (ft)          * 1313.77  * Element                 *  Left OB *
Channel * Right OB *
* Vel Head (ft)           *    0.51  * Wt. n-Val.              *          *
0.025  *          *
* W.S. Elev (ft)          * 1313.26  * Reach Len. (ft)         *  528.63  *
528.63  *  528.63  *
* Crit W.S. (ft)          * 1309.32  * Flow Area (sq ft)       *          *
1204.41  *          *
* E.G. Slope (ft/ft)      *0.000680  * Area (sq ft)            *          *
1204.41  *          *
* Q Total (cfs)           * 6900.00  * Flow (cfs)              *          *
6900.00  *          *
* Top Width (ft)          *  166.79  * Top Width (ft)          *          *
166.79  *          *
* Vel Total (ft/s)        *    5.73  * Avg. Vel. (ft/s)        *          *
5.73  *          *
```

```
* Max Chl Dpth (ft)      *    8.72  * Hydr. Depth (ft)*      *          *
7.22  *          *
* Conv. Total (cfs)      *264623.1  * Conv. (cfs)          *
*264623.1  *          *
* Length Wtd. (ft)       *  528.63  * Wetted Per. (ft)      *          *
169.46  *          *
* Min Ch El (ft)         * 1304.54  * Shear (lb/sq ft)      *          *
0.30  *          *
* Alpha                  *    1.00  * Stream Power (lb/ft s) *          *
1.73  *          *
* Frctn Loss (ft)        *    0.27  * Cum Volume (acre-ft)   *          *
219.70  *          *
* C & E Loss (ft)        *    0.06  * Cum SA (acres)         *          *
30.80  *          *
*******************************************************************************
*****************
```

Note: Multiple critical depths were found at this location. The critical depth with the lowest, valid,
water surface was used.

CROSS SECTION OUTPUT Profile #PF 4

```
*******************************************************************************
*****************
* E.G. Elev (ft)         * 1316.86  * Element               *  Left OB *
Channel * Right OB *
* Vel Head (ft)          *    0.74  * Wt. n-Val.             *          *
0.025  *          *
* W.S. Elev (ft)         * 1316.12  * Reach Len. (ft)        *  528.63  *
528.63  *  528.63  *
* Crit W.S. (ft)         * 1311.16  * Flow Area (sq ft)      *          *
1702.82  *          *
* E.G. Slope (ft/ft)     *0.000694  * Area (sq ft)           *          *
1702.82  *          *
* Q Total (cfs)          *11730.00  * Flow (cfs)             *
*11730.00  *          *
* Top Width (ft)         *  180.63  * Top Width (ft)         *          *
180.63  *          *
* Vel Total (ft/s)       *    6.89  * Avg. Vel. (ft/s)       *          *
6.89  *          *
* Max Chl Dpth (ft)      *   11.58  * Hydr. Depth (ft)       *          *
9.43  *          *
* Conv. Total (cfs)      *445404.8  * Conv. (cfs)           *
*445404.8  *          *
* Length Wtd. (ft)       *  528.63  * Wetted Per. (ft)       *          *
184.45  *          *
* Min Ch El (ft)         * 1304.54  * Shear (lb/sq ft)       *          *
0.40  *          *
* Alpha                  *    1.00  * Stream Power (lb/ft s) *          *
2.75  *          *
* Frctn Loss (ft)        *    0.25  * Cum Volume (acre-ft)   *   34.61  *
319.65  *    8.77  *
* C & E Loss (ft)        *    0.11  * Cum SA (acres)         *   47.18  *
33.37  *    6.67  *
*******************************************************************************
*****************
```

Note: Multiple critical depths were found at this location. The critical depth with the lowest, valid,
water surface was used.

CROSS SECTION

RIVER: EMF
REACH: Reach 4 RS: 14.637

```
INPUT
Description: Q(D)=6,900 cfs, Q(F)=8,890 cfs & Q(E)=12,830 cfs. All elevations
             adjusted up 2.12' for datum change.
Station Elevation Data    num=      62
     Sta    Elev     Sta    Elev     Sta    Elev     Sta    Elev     Sta
Elev
*****************************************************************************
**
 3142.76 1319.54 3203.81 1318.88 3317.64  1318.5 3326.11  1319.4 3328.96
1318.52
 3354.49 1318.46 3458.47 1318.65 3468.96 1318.61  3500.2 1318.62 3532.52
1318.72
 3598.83 1318.64 3663.09 1318.73 3699.13 1318.73    3702 1318.95 3717.46
1319.22
 3722.79 1318.89 3728.25 1318.16 3798.92 1317.67  3824.8 1317.42 3836.06
1317.46
 3849.18 1317.36 3888.48 1317.19 3894.96 1317.82 3932.07 1318.02 3943.85
1317.44
 3963.78 1317.06 3969.89    1317 3981.05 1316.52 3986.96 1315.92 4050.86
1315.68
 4124.87  1315.7 4163.79 1315.66 4198.92 1315.65 4276.77 1315.42 4346.99
1315.3
 4421.04 1315.25 4480.49 1315.24 4502.76 1315.18 4569.13 1314.82 4643.18
1314.66
  4695.3 1314.56 4728.73 1314.51 4828.89 1314.92 4838.75 1315.42 4852.41
1315.87
 4855.25 1314.42 4865.15 1313.42 4878.33 1315.06 4894.16 1314.82 4928.52
1304.45
 4937.29  1304.4 5010.82 1304.41 5034.56 1304.29 5064.52 1304.52 5077.51
1305.01
 5096.24 1309.89 5115.93 1315.09 5128.36 1315.61 5132.63 1314.92 5149.24
1315.35
 5169.91 1318.34  5184.9 1319.58

Manning's n Values        num=       3
     Sta   n Val     Sta   n Val     Sta   n Val
***********************************************
 3142.76     .04 4894.16    .025 5115.93     .04

Bank Sta: Left   Right    Lengths: Left Channel   Right     Coeff Contr.
Expan.
       4894.16 5115.93              720 1188.15    1270             .1
.3
Ineffective Flow     num=       1
   Sta L   Sta R    Elev  Permanent
 3142.76 3932.07 1319.12       F
Left Levee      Station= 4852.41      Elevation= 1315.87
Right Levee     Station= 5128.36      Elevation= 1315.61

CROSS SECTION OUTPUT  Profile #Design
*****************************************************************************
*****************
* E.G. Elev (ft)          * 1313.44  * Element                 *  Left OB *
Channel * Right OB *
* Vel Head (ft)           *    0.31  * Wt. n-Val.              *          *
0.025  *          *
* W.S. Elev (ft)          * 1313.13  * Reach Len. (ft)         *  720.00  *
1188.15  * 1270.00  *
* Crit W.S. (ft)          * 1308.39  * Flow Area (sq ft)       *          *
1547.68  *          *
* E.G. Slope (ft/ft)      *0.000395  * Area (sq ft)            *          *
1547.68  *          *
* Q Total (cfs)           * 6900.00  * Flow (cfs)              *          *
6900.00  *          *
* Top Width (ft)          *  208.76  * Top Width (ft)          *          *
```

```
208.76  *          *
* Vel Total (ft/s)       *    4.46  * Avg. Vel. (ft/s)       *          *
4.46  *          *
* Max Chl Dpth (ft)      *    8.84  * Hydr. Depth (ft)       *          *
7.41  *          *
* Conv. Total (cfs)      *347166.3  * Conv. (cfs)            *
*347166.3  *          *
* Length Wtd. (ft)       * 1188.15  * Wetted Per. (ft)       *          *
211.09  *          *
* Min Ch El (ft)         * 1304.29  * Shear (lb/sq ft)       *          *
0.18  *          *
* Alpha                  *    1.00  * Stream Power (lb/ft s) *          *
0.81  *          *
* Frctn Loss (ft)        *    0.50  * Cum Volume (acre-ft)   *          *
203.00  *          *
* C & E Loss (ft)        *    0.00  * Cum SA (acres)         *          *
28.52  *          *
*******************************************************************************
*****************

Note:    Multiple critical depths were found at this location.  The critical
depth with the lowest, valid,
         water surface was used.

CROSS SECTION OUTPUT  Profile #PF 4
*******************************************************************************
*****************
* E.G. Elev (ft)         * 1316.50  * Element                *  Left OB *
Channel * Right OB *
* Vel Head (ft)          *    0.38  * Wt. n-Val.             *   0.040  *
0.025  *   0.040  *
* W.S. Elev (ft)         * 1316.12  * Reach Len. (ft)        *  720.00  *
1188.15  * 1270.00  *
* Crit W.S. (ft)         * 1310.00  * Flow Area (sq ft)      *  854.36  *
2199.02  *   31.71  *
* E.G. Slope (ft/ft)     *0.000347  * Area (sq ft)           *  854.36  *
2199.02  *   31.71  *
* Q Total (cfs)          *11730.00  * Flow (cfs)             *  567.04
*11143.77  *   19.19  *
* Top Width (ft)         * 1169.61  * Top Width (ft)         *  909.19  *
221.77  *   38.65  *
* Vel Total (ft/s)       *    3.80  * Avg. Vel. (ft/s)       *    0.66  *
5.07  *    0.61  *
* Max Chl Dpth (ft)      *   11.83  * Hydr. Depth (ft)       *    0.94  *
9.92  *    0.82  *
* Conv. Total (cfs)      *629622.9  * Conv. (cfs)            * 30436.4
*598156.2  *  1030.3  *
* Length Wtd. (ft)       * 1173.33  * Wetted Per. (ft)       *  909.73  *
224.61  *   38.77  *
* Min Ch El (ft)         * 1304.29  * Shear (lb/sq ft)       *    0.02  *
0.21  *    0.02  *
* Alpha                  *    1.69  * Stream Power (lb/ft s) *    0.01  *
1.08  *    0.01  *
* Frctn Loss (ft)        *    0.44  * Cum Volume (acre-ft)   *   29.43  *
295.98  *    8.58  *
* C & E Loss (ft)        *    0.01  * Cum SA (acres)         *   41.66  *
30.93  *    6.44  *
*******************************************************************************
*****************

Note:    Multiple critical depths were found at this location.  The critical
depth with the lowest, valid,
         water surface was used.

CROSS SECTION
```

```
RIVER: EMF
REACH: Reach 4            RS: 14.412

INPUT
Description: All elevations adjusted up 2.12' for datum change
Station Elevation Data    num=      54
     Sta    Elev     Sta    Elev     Sta    Elev     Sta    Elev     Sta
Elev
*******************************************************************************
**
 3422.92 1319.48 3475.55 1318.86 3595.99 1318.41 3605.55 1319.44 3608.78
1318.42
 3621.36  1318.4 3682.92 1318.52  3698.6 1318.41 3744.61 1318.28 3760.04
1318.32
 3764.05 1319.22 3781.11  1319.3 3786.52 1318.29 3798.82  1317.8 3802.95
1318.32
 3812.51 1317.68 3814.38 1317.18 3835.67  1316.9 3846.42 1316.62 3911.92
1316.57
 3957.49 1316.46 3973.35 1316.45 4068.54 1316.22 4126.87 1315.92 4197.98
1315.71
 4290.68 1315.61 4341.83 1315.52 4401.75 1315.37 4512.82 1315.02 4572.37
1314.88
 4623.88 1314.76 4695.57 1314.74 4734.96 1314.71 4819.86 1314.72 4825.97
1315.39
 4845.06 1315.36 4857.32 1313.94 4871.73 1314.68 4885.65 1314.62 4898.05
1310.78
 4919.22 1304.26 4964.77 1303.98 4993.91 1303.83  4994.5 1303.72 5009.11
1304
 5066.41 1304.65 5099.61 1314.62 5112.58  1314.4 5115.39 1313.82 5140.16
1314.06
 5161.77 1318.45  5171.5 1318.35 5175.35 1318.57 5177.04 1319.22

Manning's n Values        num=       3
     Sta   n Val     Sta   n Val     Sta   n Val
*************************************************
 3422.92     .04 4885.65    .025 5099.61     .04

Bank Sta: Left   Right    Lengths: Left Channel   Right     Coeff Contr.
Expan.
       4885.65 5099.61           594.77  594.77  594.77            .1
.3
Left Levee      Station= 4845.06      Elevation= 1315.36
Right Levee     Station= 5099.61      Elevation= 1314.62

CROSS SECTION OUTPUT  Profile #Design
*******************************************************************************
*****************
* E.G. Elev (ft)          * 1312.93  * Element                 *  Left OB *
Channel * Right OB *
* Vel Head (ft)           *    0.35  * Wt. n-Val.              *          *
0.025  *          *
* W.S. Elev (ft)          * 1312.59  * Reach Len. (ft)         *  594.77  *
594.77  *  594.77  *
* Crit W.S. (ft)          * 1308.13  * Flow Area (sq ft)       *          *
1462.46  *          *
* E.G. Slope (ft/ft)      *0.000453  * Area (sq ft)            *          *
1462.46  *          *
* Q Total (cfs)           * 6900.00  * Flow (cfs)              *          *
6900.00  *          *
* Top Width (ft)          *  200.63  * Top Width (ft)          *          *
200.63  *          *
* Vel Total (ft/s)        *    4.72  * Avg. Vel. (ft/s)        *          *
4.72  *          *
* Max Chl Dpth (ft)       *    8.87  * Hydr. Depth (ft)        *          *
7.29  *          *
```

```
* Conv. Total (cfs)       *324161.4  * Conv. (cfs)          *
*324161.4  *          *
* Length Wtd. (ft)        *  594.77  * Wetted Per. (ft)      *          *
203.07  *          *
* Min Ch El (ft)          * 1303.72  * Shear (lb/sq ft)      *          *
0.20  *          *
* Alpha                   *    1.00  * Stream Power (lb/ft s) *          *
0.96  *          *
* Frctn Loss (ft)         *    0.27  * Cum Volume (acre-ft)   *          *
161.94  *          *
* C & E Loss (ft)         *    0.00  * Cum SA (acres)         *          *
22.93  *          *
*******************************************************************************
*****************

Note:    Multiple critical depths were found at this location.  The critical
depth with the lowest, valid,
         water surface was used.

CROSS SECTION OUTPUT  Profile #PF 4
*******************************************************************************
*****************
* E.G. Elev (ft)          * 1316.05  * Element               *  Left OB *
Channel * Right OB *
* Vel Head (ft)           *    0.46  * Wt. n-Val.            *   0.040  *
0.025  *   0.040  *
* W.S. Elev (ft)          * 1315.59  * Reach Len. (ft)        *  594.77  *
594.77  *  594.77  *
* Crit W.S. (ft)          * 1309.76  * Flow Area (sq ft)      *  350.79  *
2091.19  *   64.80  *
* E.G. Slope (ft/ft)      *0.000416  * Area (sq ft)           *  350.79  *
2091.19  *   64.80  *
* Q Total (cfs)           *11730.00  * Flow (cfs)             *  189.27
*11481.00  *   59.73  *
* Top Width (ft)          *  845.70  * Top Width (ft)         *  583.66  *
213.96  *   48.08  *
* Vel Total (ft/s)        *    4.68  * Avg. Vel. (ft/s)       *    0.54  *
5.49  *    0.92  *
* Max Chl Dpth (ft)       *   11.87  * Hydr. Depth (ft)       *    0.60  *
9.77  *    1.35  *
* Conv. Total (cfs)       *575066.1  * Conv. (cfs)            *  9279.0
*562858.6  *  2928.4  *
* Length Wtd. (ft)        *  594.77  * Wetted Per. (ft)       *  583.80  *
217.00  *   48.30  *
* Min Ch El (ft)          * 1303.72  * Shear (lb/sq ft)       *    0.02  *
0.25  *    0.03  *
* Alpha                   *    1.35  * Stream Power (lb/ft s) *    0.01  *
1.37  *    0.03  *
* Frctn Loss (ft)         *    0.25  * Cum Volume (acre-ft)   *   19.47  *
237.47  *    7.17  *
* C & E Loss (ft)         *    0.00  * Cum SA (acres)         *   29.33  *
24.98  *    5.17  *
*******************************************************************************
*****************

Note:    Multiple critical depths were found at this location.  The critical
depth with the lowest, valid,
         water surface was used.

CROSS SECTION


RIVER: EMF
REACH: Reach 4            RS: 14.3

INPUT
```

```
Description: All elevations adjusted up 2.12' for datum change
Station Elevation Data    num=      42
     Sta    Elev     Sta    Elev     Sta    Elev     Sta    Elev     Sta
Elev
*******************************************************************************
**
 3566.83 1319.02 3589.22 1318.75 3663.88 1318.47 3665.33 1316.58 3671.76
1317.5
 3673.16 1317.42 3698.46 1316.94 3731.24 1316.88 3781.07 1316.68 3857.96
1316.43
 3892.15 1316.32 3955.87 1316.33  4003.2 1316.24 4087.76 1315.92 4114.28
1315.84
  4180.5 1315.82 4317.55 1315.56 4405.13 1315.33 4447.47 1315.33 4480.01
1315.13
 4558.56 1314.72 4669.63 1314.59 4704.65 1314.56 4781.72 1314.36 4820.93
1314.55
 4825.52 1315.02  4844.9 1314.71  4847.8 1314.08 4855.97 1313.49 4871.58
1314.61
 4885.81 1314.32 4891.36 1312.68 4920.49    1304 5003.16 1303.66 5063.74
1303.9
 5089.82 1311.32  5100.3 1314.28 5112.06  1314.1 5115.09 1313.43 5138.86
1313.69
 5159.66 1318.02 5174.16 1318.26

Manning's n Values        num=       3
     Sta   n Val     Sta   n Val     Sta   n Val
***********************************************
 3566.83     .04 4885.81    .025  5100.3     .04

Bank Sta: Left   Right    Lengths: Left Channel   Right     Coeff Contr.
Expan.
       4885.81  5100.3              840  571.41     525             .1
.3
Left Levee      Station= 4871.58      Elevation= 1314.61
Right Levee     Station=  5100.3      Elevation= 1314.28

CROSS SECTION OUTPUT  Profile #Design
*******************************************************************************
*****************
* E.G. Elev (ft)          * 1312.66  * Element                 *  Left OB *
Channel * Right OB *
* Vel Head (ft)           *    0.35  * Wt. n-Val.              *          *
0.025  *          *
* W.S. Elev (ft)          * 1312.32  * Reach Len. (ft)         *  840.00  *
571.41  *  525.00  *
* Crit W.S. (ft)          * 1307.86  * Flow Area (sq ft)       *          *
1459.28  *          *
* E.G. Slope (ft/ft)      *0.000457  * Area (sq ft)            *          *
1459.28  *          *
* Q Total (cfs)           * 6900.00  * Flow (cfs)              *          *
6900.00  *          *
* Top Width (ft)          *  200.77  * Top Width (ft)          *          *
200.77  *          *
* Vel Total (ft/s)        *    4.73  * Avg. Vel. (ft/s)        *          *
4.73  *          *
* Max Chl Dpth (ft)       *    8.66  * Hydr. Depth (ft)        *          *
7.27  *          *
* Conv. Total (cfs)       *322901.2  * Conv. (cfs)             *
*322901.2  *          *
* Length Wtd. (ft)        *  571.41  * Wetted Per. (ft)        *          *
203.16  *          *
* Min Ch El (ft)          * 1303.66  * Shear (lb/sq ft)        *          *
0.20  *          *
* Alpha                   *    1.00  * Stream Power (lb/ft s) *          *
0.97  *          *
* Frctn Loss (ft)         *    0.25  * Cum Volume (acre-ft)   *          *
```

```
142.00  *          *
* C & E Loss (ft)        *    0.00  * Cum SA (acres)        *          *
20.19  *          *
*****************************************************************************
*****************

Note:    Multiple critical depths were found at this location.  The critical
depth with the lowest, valid,
         water surface was used.

CROSS SECTION OUTPUT  Profile #PF 4
*****************************************************************************
*****************
* E.G. Elev (ft)         * 1315.80  * Element                 *  Left OB *
Channel * Right OB *
* Vel Head (ft)          *    0.46  * Wt. n-Val.              *   0.040  *
0.025  *   0.040  *
* W.S. Elev (ft)         * 1315.34  * Reach Len. (ft)         *  840.00  *
571.41  *  525.00  *
* Crit W.S. (ft)         * 1309.50  * Flow Area (sq ft)       *  303.15  *
2094.77  *   67.28  *
* E.G. Slope (ft/ft)     *0.000416  * Area (sq ft)            *  303.15  *
2094.77  *   67.28  *
* Q Total (cfs)          *11730.00  * Flow (cfs)              *  167.75
*11497.28  *   64.97  *
* Top Width (ft)         *  746.55  * Top Width (ft)          *  485.56  *
214.49  *   46.50  *
* Vel Total (ft/s)       *    4.76  * Avg. Vel. (ft/s)        *    0.55  *
5.49  *    0.97  *
* Max Chl Dpth (ft)      *   11.68  * Hydr. Depth (ft)        *    0.62  *
9.77  *    1.45  *
* Conv. Total (cfs)      *575121.1  * Conv. (cfs)             *  8224.6
*563710.9  *  3185.6  *
* Length Wtd. (ft)       *  576.14  * Wetted Per. (ft)        *  485.72  *
217.44  *   46.75  *
* Min Ch El (ft)         * 1303.66  * Shear (lb/sq ft)        *    0.02  *
0.25  *    0.04  *
* Alpha                  *    1.30  * Stream Power (lb/ft s)  *    0.01  *
1.37  *    0.04  *
* Frctn Loss (ft)        *    0.23  * Cum Volume (acre-ft)    *   15.00  *
208.89  *    6.27  *
* C & E Loss (ft)        *    0.01  * Cum SA (acres)          *   22.03  *
22.06  *    4.53  *
*****************************************************************************
*****************

Note:    Multiple critical depths were found at this location.  The critical
depth with the lowest, valid,
         water surface was used.

CROSS SECTION


RIVER: EMF
REACH: Reach 4            RS: 14.191

INPUT
Description: All elevations adjusted up 2.12' for datum change
Station Elevation Data    num=      59
     Sta     Elev     Sta     Elev     Sta     Elev     Sta     Elev     Sta
Elev
*****************************************************************************
**
 3430.03 1318.36 3445.46 1318.24 3704.18 1317.52 3730.05 1316.61 3738.54
1316.44
 3866.17 1316.26 3895.73 1316.25 3950.98 1316.22 4000.68 1316.04 4021.78
```

```
1315.99
 4045.25 1315.85  4092.6 1315.77 4135.18 1315.82 4194.79 1315.89 4304.97
1315.6
 4357.65 1315.46 4367.36 1316.79 4373.25 1316.62 4380.86 1316.69 4390.57
1316.31
 4396.55 1315.19 4409.58 1313.19 4425.32 1309.82 4443.88 1310.29 4462.94
1313.01
 4479.87 1315.82 4487.26 1316.32 4495.81 1317.12 4518.72 1317.02 4526.13
1314.11
 4535.61  1314.9 4542.14 1314.91 4565.02 1314.42 4621.05 1314.18 4648.88
1314.07
 4654.03 1314.11 4673.19    1314 4792.91 1313.92 4807.78 1313.98 4826.92
1314.2
  4832.6 1314.74 4848.48 1314.46 4862.28 1312.92 4874.59  1314.1  4890.8
1314.05
 4916.27 1305.34 4921.28 1303.73 4942.73 1303.42 4985.48 1303.41 5001.69
1303.32
 5070.94 1304.06  5076.1 1305.41 5098.91 1312.72 5103.47 1314.32 5117.06
1313.7
 5119.73 1313.36 5142.62 1313.71 5163.38 1318.52 5179.14 1318.61

Manning's n Values        num=       3
     Sta   n Val     Sta   n Val     Sta   n Val
***********************************************
 3430.03     .04  4890.8    .025 5103.47     .04

Bank Sta: Left   Right    Lengths: Left Channel   Right     Coeff Contr.
Expan.
        4890.8 5103.47          1011.04 1011.04 1011.04             .1
.3
Ineffective Flow     num=       1
   Sta L   Sta R    Elev  Permanent
 3430.03 4518.72 1318.12       F
Left Levee      Station=  4832.6      Elevation= 1314.74
Right Levee     Station= 5103.47      Elevation= 1314.32
Blocked Obstructions     num=       1
   Sta L   Sta R    Elev
************************
 4367.36    4495 1316.79

CROSS SECTION OUTPUT  Profile #Design
*******************************************************************************
*****************
* E.G. Elev (ft)         * 1312.41  * Element                 *  Left OB *
Channel * Right OB *
* Vel Head (ft)          *    0.34  * Wt. n-Val.              *          *
0.025  *          *
* W.S. Elev (ft)         * 1312.07  * Reach Len. (ft)         * 1011.04  *
1011.04  * 1011.04  *
* Crit W.S. (ft)         * 1307.52  * Flow Area (sq ft)       *          *
1485.02  *          *
* E.G. Slope (ft/ft)     *0.000430  * Area (sq ft)            *          *
1485.02  *          *
* Q Total (cfs)          * 6900.00  * Flow (cfs)              *          *
6900.00  *          *
* Top Width (ft)         *  200.30  * Top Width (ft)          *          *
200.30  *          *
* Vel Total (ft/s)       *    4.65  * Avg. Vel. (ft/s)        *          *
4.65  *          *
* Max Chl Dpth (ft)      *    8.75  * Hydr. Depth (ft)        *          *
7.41  *          *
* Conv. Total (cfs)      *332732.3  * Conv. (cfs)             *
*332732.3  *          *
* Length Wtd. (ft)       * 1011.04  * Wetted Per. (ft)        *          *
202.90  *          *
* Min Ch El (ft)         * 1303.32  * Shear (lb/sq ft)        *          *
```

```
0.20  *          *
* Alpha                    *    1.00  * Stream Power (lb/ft s) *          *
0.91  *          *
* Frctn Loss (ft)          *    0.46  * Cum Volume (acre-ft)   *          *
122.69  *          *
* C & E Loss (ft)          *    0.00  * Cum SA (acres)         *          *
17.56  *          *
*******************************************************************************
*****************

Note:    Multiple critical depths were found at this location.  The critical
depth with the lowest, valid,
         water surface was used.

CROSS SECTION OUTPUT  Profile #PF 4
*******************************************************************************
*****************
* E.G. Elev (ft)           * 1315.56  * Element                 *  Left OB *
Channel * Right OB *
* Vel Head (ft)            *    0.44  * Wt. n-Val.              *   0.040  *
0.025  *   0.040  *
* W.S. Elev (ft)           * 1315.13  * Reach Len. (ft)         * 1011.04  *
1011.04  * 1011.04  *
* Crit W.S. (ft)           * 1309.13  * Flow Area (sq ft)       *  364.95  *
2121.61  *   60.18  *
* E.G. Slope (ft/ft)       *0.000389  * Area (sq ft)            *  364.95  *
2121.61  *   60.18  *
* Q Total (cfs)            *11730.00  * Flow (cfs)              *  266.14
*11410.70  *   53.17  *
* Top Width (ft)           *  625.19  * Top Width (ft)          *  367.26  *
212.67  *   45.26  *
* Vel Total (ft/s)         *    4.61  * Avg. Vel. (ft/s)        *    0.73  *
5.38  *    0.88  *
* Max Chl Dpth (ft)        *   11.81  * Hydr. Depth (ft)        *    0.99  *
9.98  *    1.33  *
* Conv. Total (cfs)        *594599.7  * Conv. (cfs)             * 13490.6
*578414.1  *  2695.1  *
* Length Wtd. (ft)         * 1011.04  * Wetted Per. (ft)        *  367.66  *
215.97  *   45.46  *
* Min Ch El (ft)           * 1303.32  * Shear (lb/sq ft)        *    0.02  *
0.24  *    0.03  *
* Alpha                    *    1.33  * Stream Power (lb/ft s) *    0.02  *
1.28  *    0.03  *
* Frctn Loss (ft)          *    0.41  * Cum Volume (acre-ft)   *    8.56  *
181.24  *    5.50  *
* C & E Loss (ft)          *    0.00  * Cum SA (acres)         *   13.80  *
19.26  *    3.97  *
*******************************************************************************
*****************

Note:    Multiple critical depths were found at this location.  The critical
depth with the lowest, valid,
         water surface was used.

CROSS SECTION


RIVER: EMF
REACH: Reach 4            RS: 14

INPUT
Description: Ineffective Flow Area Upstream of Higley Road Bridge. All
             elevations adjusted up 2.12' for datum change.
Station Elevation Data    num=      38
     Sta     Elev     Sta     Elev     Sta     Elev     Sta     Elev     Sta
Elev
```

```
*****************************************************************************
**
  4030.6 1316.82 4039.42 1315.57 4103.08 1314.92 4117.51 1314.92 4237.57
1314.75
 4267.03 1314.72 4372.08 1314.54 4416.57 1314.42 4506.59 1314.38 4566.09
1314.29
 4641.08 1314.23 4676.38 1314.27 4715.62 1314.22 4775.59 1313.97 4824.41
1313.72
 4830.23 1314.16 4847.44 1313.76 4850.16 1314.52 4853.82 1313.65 4864.27
1312.74
 4889.58 1313.52 4919.85 1304.35 4926.48 1304.12 4959.63 1303.39 4994.21
1303.24
  5008.4 1303.02 5030.42 1303.15 5044.23 1303.32 5072.31 1303.38 5103.68
1313.9
 5117.88 1313.57 5120.37  1312.6 5126.51 1314.32 5143.86 1314.72 5149.85
1315.02
 5159.64 1316.99 5170.27  1317.3  5180.2 1317.72

Manning's n Values          num=       3
     Sta   n Val     Sta   n Val     Sta   n Val
***********************************************
  4030.6     .04 4889.58    .025 5103.68     .04

Bank Sta: Left   Right    Lengths: Left Channel   Right     Coeff Contr.
Expan.
       4889.58 5103.68              390  204.54      80             .3
.5
Ineffective Flow     num=       1
   Sta L   Sta R    Elev  Permanent
  4030.6    4520 1318.12       F
Left Levee      Station= 4850.16      Elevation= 1314.52
Right Levee     Station= 5103.68      Elevation=  1313.9

CROSS SECTION OUTPUT  Profile #Design
*****************************************************************************
*****************
* E.G. Elev (ft)          * 1311.94  * Element                 *  Left OB *
Channel * Right OB *
* Vel Head (ft)           *    0.36  * Wt. n-Val.              *          *
0.025  *          *
* W.S. Elev (ft)          * 1311.59  * Reach Len. (ft)         *  390.00  *
204.54  *   80.00  *
* Crit W.S. (ft)          * 1307.32  * Flow Area (sq ft)       *          *
1434.71  *          *
* E.G. Slope (ft/ft)      *0.000483  * Area (sq ft)            *          *
1434.71  *          *
* Q Total (cfs)           * 6900.00  * Flow (cfs)              *          *
6900.00  *          *
* Top Width (ft)          *  200.81  * Top Width (ft)          *          *
200.81  *          *
* Vel Total (ft/s)        *    4.81  * Avg. Vel. (ft/s)        *          *
4.81  *          *
* Max Chl Dpth (ft)       *    8.56  * Hydr. Depth (ft)        *          *
7.14  *          *
* Conv. Total (cfs)       *313807.4  * Conv. (cfs)             *
*313807.4  *          *
* Length Wtd. (ft)        *  204.54  * Wetted Per. (ft)        *          *
203.23  *          *
* Min Ch El (ft)          * 1303.02  * Shear (lb/sq ft)        *          *
0.21  *          *
* Alpha                   *    1.00  * Stream Power (lb/ft s) *          *
1.02  *          *
* Frctn Loss (ft)         *    0.12  * Cum Volume (acre-ft)    *          *
88.80  *          *
* C & E Loss (ft)         *    0.00  * Cum SA (acres)          *          *
12.91  *          *
```

```
*****************************************************************************
*****************

Note:    Multiple critical depths were found at this location.  The critical
depth with the lowest, valid,
         water surface was used.

CROSS SECTION OUTPUT  Profile #PF 4
*****************************************************************************
*****************
* E.G. Elev (ft)          * 1315.15  * Element                 *  Left OB *
Channel * Right OB *
* Vel Head (ft)           *    0.48  * Wt. n-Val.              *   0.040  *
0.025  *   0.040  *
* W.S. Elev (ft)          * 1314.67  * Reach Len. (ft)         *  390.00  *
204.54  *   80.00  *
* Crit W.S. (ft)          * 1308.92  * Flow Area (sq ft)       *  227.37  *
2081.08  *   27.31  *
* E.G. Slope (ft/ft)      *0.000431  * Area (sq ft)            *  269.09  *
2081.08  *   27.31  *
* Q Total (cfs)           *11730.00  * Flow (cfs)              *  126.80
*11586.43  *   16.77  *
* Top Width (ft)          *  845.52  * Top Width (ft)          *  593.40  *
214.10  *   38.01  *
* Vel Total (ft/s)        *    5.02  * Avg. Vel. (ft/s)        *    0.56  *
5.57  *    0.61  *
* Max Chl Dpth (ft)       *   11.65  * Hydr. Depth (ft)        *    0.62  *
9.72  *    0.72  *
* Conv. Total (cfs)       *564923.8  * Conv. (cfs)             *  6106.8
*558009.2  *   807.9  *
* Length Wtd. (ft)        *  205.45  * Wetted Per. (ft)        *  369.86  *
217.19  *   38.44  *
* Min Ch El (ft)          * 1303.02  * Shear (lb/sq ft)        *    0.02  *
0.26  *    0.02  *
* Alpha                   *    1.21  * Stream Power (lb/ft s) *    0.01  *
1.44  *    0.01  *
* Frctn Loss (ft)         *    0.11  * Cum Volume (acre-ft)    *    1.20  *
132.46  *    4.49  *
* C & E Loss (ft)         *    0.03  * Cum SA (acres)          *    2.66  *
14.30  *    3.01  *
*****************************************************************************
*****************

Note:    Multiple critical depths were found at this location.  The critical
depth with the lowest, valid,
         water surface was used.

CROSS SECTION


RIVER: EMF
REACH: Reach 4            RS: 13.961

INPUT
Description: Higley Road Bridge (Upstream Face). All elevations adjusted up
             2.12' for datum change.
6 Span Bridge with Riprap
             Protection
Manning n Value of .030 used for Channel
Use Field
             Survey Data for This Cross Section
Skew Angle 41.63 Degrees,
             Cross Section Data Adjusted
Station Elevation Data    num=      22
     Sta    Elev     Sta    Elev     Sta    Elev     Sta    Elev     Sta
Elev
```

```
*****************************************************************************
**
 4807.89 1317.52 4840.55 1317.42 4854.42 1317.38 4855.03 1312.93 4867.07
1311.94
 4898.11 1311.94 4901.46 1309.28 4917.23 1304.52 4948.05 1303.46 4994.94
1303.5
 5012.22 1302.39 5024.43 1301.67 5030.47 1301.92 5042.29 1303.65 5071.67
1304.36
  5089.7 1308.57 5097.72 1311.17 5123.85 1311.93 5130.25 1313.39  5133.9
1314.41
 5135.84 1317.24 5165.08 1317.08

Manning's n Values        num=       3
     Sta   n Val     Sta   n Val     Sta   n Val
*********************************************
 4807.89     .04 4854.42     .03 5135.84     .04

Bank Sta: Left   Right    Lengths: Left Channel   Right     Coeff Contr.
Expan.
       4854.42 5135.84            79.19   79.19   79.19             .3
.5
Left Levee      Station= 4854.42      Elevation= 1317.38
Right Levee     Station= 5135.84      Elevation= 1317.24

CROSS SECTION OUTPUT  Profile #Design
*****************************************************************************
*****************
* E.G. Elev (ft)         * 1311.82  * Element                *  Left OB *
Channel * Right OB *
* Vel Head (ft)          *    0.36  * Wt. n-Val.             *          *
0.030  *          *
* W.S. Elev (ft)         * 1311.46  * Reach Len. (ft)        *    0.10  *
0.10  *    0.10  *
* Crit W.S. (ft)         * 1307.33  * Flow Area (sq ft)      *          *
1424.92  *          *
* E.G. Slope (ft/ft)     *0.000751  * Area (sq ft)           *          *
1424.92  *          *
* Q Total (cfs)          * 6900.00  * Flow (cfs)             *          *
6900.00  *          *
* Top Width (ft)         *  208.83  * Top Width (ft)         *          *
208.83  *          *
* Vel Total (ft/s)       *    4.84  * Avg. Vel. (ft/s)       *          *
4.84  *          *
* Max Chl Dpth (ft)      *    9.79  * Hydr. Depth (ft)       *          *
6.82  *          *
* Conv. Total (cfs)      *251836.1  * Conv. (cfs)            *
*251836.1  *          *
* Length Wtd. (ft)       *    0.10  * Wetted Per. (ft)       *          *
211.40  *          *
* Min Ch El (ft)         * 1301.67  * Shear (lb/sq ft)       *          *
0.32  *          *
* Alpha                  *    1.00  * Stream Power (lb/ft s) *          *
1.53  *          *
* Frctn Loss (ft)        *          * Cum Volume (acre-ft)   *          *
82.09  *          *
* C & E Loss (ft)        *          * Cum SA (acres)         *          *
11.95  *          *
*****************************************************************************
*****************

Note:    Multiple critical depths were found at this location.  The critical
depth with the lowest, valid,
         energy was used.

CROSS SECTION OUTPUT  Profile #PF 4
*****************************************************************************
```

```
*****************
* E.G. Elev (ft)          * 1315.01  * Element                 *  Left OB *
Channel * Right OB *
* Vel Head (ft)           *    0.42  * Wt. n-Val.              *          *
0.030  *          *
* W.S. Elev (ft)          * 1314.59  * Reach Len. (ft)         *    0.10  *
0.10  *    0.10  *
* Crit W.S. (ft)          * 1308.93  * Flow Area (sq ft)       *          *
2250.45  *          *
* E.G. Slope (ft/ft)      *0.000700  * Area (sq ft)            *          *
2250.45  *          *
* Q Total (cfs)           *11730.00  * Flow (cfs)              *
*11730.00  *          *
* Top Width (ft)          *  279.22  * Top Width (ft)          *          *
279.22  *          *
* Vel Total (ft/s)        *    5.21  * Avg. Vel. (ft/s)        *          *
5.21  *          *
* Max Chl Dpth (ft)       *   12.92  * Hydr. Depth (ft)        *          *
8.06  *          *
* Conv. Total (cfs)       *443197.8  * Conv. (cfs)             *
*443197.8  *          *
* Length Wtd. (ft)        *    0.10  * Wetted Per. (ft)        *          *
283.85  *          *
* Min Ch El (ft)          * 1301.67  * Shear (lb/sq ft)        *          *
0.35  *          *
* Alpha                   *    1.00  * Stream Power (lb/ft s) *          *
1.81  *          *
* Frctn Loss (ft)         *          * Cum Volume (acre-ft)    *          *
122.29  *    4.46  *
* C & E Loss (ft)         *          * Cum SA (acres)          *          *
13.15  *    2.97  *
*******************************************************************************
*****************
```

Note: Multiple critical depths were found at this location. The critical depth with the lowest, valid,
energy was used.

BRIDGE

RIVER: EMF
REACH: Reach 4 RS: 13.954

INPUT
Description: Higley Road 6-Span Bridge
Use Field Survey Data for this Cross
Section
Elongated Piers With Semi-Circular Ends
Distance from Upstream XS = .1
Deck/Roadway Width = 78.69
Weir Coefficient = 2.6
Upstream Deck/Roadway Coordinates
num= 18

Sta	Hi Cord	Lo Cord	Sta	Hi Cord	Lo Cord	Sta	Hi Cord	Lo Cord
4807.89	1317.62	1317.12	4855.03	1317.95	1312.93	4855.77	1317.95	1314.59
4861.52	1317.99	1314.59	4899.6	1318.15	1314.8	4901.04	1318.19	1314.81
4936.41	1318.37	1314.89	4948.05	1318.4	1314.92	4974.83	1318.46	1314.97
4995.15	1318.43	1314.92	5012.49	1318.42	1314.91	5042.39	1318.37	1314.59
5050.76	1318.35	1314.61	5088.54	1318.2	1314.65	5088.74	1318.2	1314.65
5127.12	1317.96	1314.45	5135.84	1317.87	1314.62	5165.36	1317.53	1316.12

Upstream Bridge Cross Section Data
Station Elevation Data num= 22

Sta	Elev	Sta	Elev	Sta	Elev	Sta	Elev	Sta

```
Elev
*****************************************************************************
**
 4807.89 1317.52 4840.55 1317.42 4854.42 1317.38 4855.03 1312.93 4867.07
1311.94
 4898.11 1311.94 4901.46 1309.28 4917.23 1304.52 4948.05 1303.46 4994.94
1303.5
 5012.22 1302.39 5024.43 1301.67 5030.47 1301.92 5042.29 1303.65 5071.67
1304.36
  5089.7 1308.57 5097.72 1311.17 5123.85 1311.93 5130.25 1313.39  5133.9
1314.41
 5135.84 1317.24 5165.08 1317.08

Manning's n Values        num=       3
     Sta   n Val     Sta   n Val     Sta   n Val
*********************************************
 4807.89     .04 4854.42     .03 5135.84     .04

Bank Sta: Left   Right    Coeff Contr.   Expan.
       4854.42 5135.84             .3       .5
Left Levee      Station= 4854.42      Elevation= 1317.38
Right Levee     Station= 5135.84      Elevation= 1317.24

Downstream  Deck/Roadway Coordinates
    num=      19
     Sta Hi Cord Lo Cord     Sta Hi Cord Lo Cord     Sta Hi Cord Lo Cord
*********************************************************************
  4814.7 1317.65 1316.12 4861.52 1317.99 1314.12  4864.8    1318 1314.59
  4899.6 1318.15 1314.55 4903.76 1318.17 1314.54 4936.41 1318.37 1314.66
 4950.55 1318.41 1314.74 4974.83 1318.46 1314.83 4997.42 1318.43 1314.92
 5012.49 1318.42 1314.87 5044.21 1318.36 1314.79 5050.76 1318.35 1314.78
 5088.74  1318.2 1314.73 5090.93 1318.18 1314.72 5127.12 1317.96 1314.75
 5135.98 1317.87 1314.76 5136.06 1317.87 1313.59 5165.36 1317.53 1315.12
 5171.86 1317.42 1317.12

Downstream Bridge Cross Section Data
Station Elevation Data    num=      21
     Sta    Elev     Sta    Elev     Sta    Elev     Sta    Elev     Sta
Elev
*****************************************************************************
**
  4814.7 1317.08 4855.13 1317.11 4857.13 1317.09 4870.98 1312.36 4892.66
1310.98
 4901.97 1308.98 4920.34 1303.94  4948.7 1303.17 4995.86 1303.84 5004.41
1302.7
 5016.54 1301.77 5027.69 1302.52 5043.04 1303.71  5068.4 1303.34 5089.23
1309.16
    5098 1311.49 5126.96  1312.7 5131.94  1313.8 5136.06 1313.59  5136.2
1317.3
 5171.86 1317.28

Manning's n Values        num=       3
     Sta   n Val     Sta   n Val     Sta   n Val
*********************************************
  4814.7     .04 4857.13     .03  5136.2     .04

Bank Sta: Left   Right    Coeff Contr.   Expan.
       4857.13  5136.2             .3       .5
Left Levee      Station= 4857.13      Elevation= 1317.09
Right Levee     Station=  5136.2      Elevation=  1317.3

Upstream Embankment side slope              =       0 horiz. to 1.0 vertical
Downstream Embankment side slope            =       0 horiz. to 1.0 vertical
Maximum allowable submergence for weir flow =     .95
Elevation at which weir flow begins         =
Energy head used in spillway design         =
```

```
Spillway height used in design                =
Weir crest shape                              = Broad Crested

Number of Piers =  5

Pier Data
Pier Station     Upstream= 4901.04    Downstream= 4903.76
Upstream     num=       2
    Width   Elev    Width   Elev
*******************************
       2 1308.28       2 1315.12
Downstream     num=       2
    Width   Elev    Width   Elev
*******************************
       2 1308.16       2 1315.12

Pier Data
Pier Station     Upstream= 4948.05    Downstream= 4950.55
Upstream     num=       2
    Width   Elev    Width   Elev
*******************************
       2 1302.46       2 1315.12
Downstream     num=       2
    Width   Elev    Width   Elev
*******************************
       2 1302.71       2 1315.12

Pier Data
Pier Station     Upstream= 4995.15    Downstream= 4997.42
Upstream     num=       2
    Width   Elev    Width   Elev
*******************************
       2  1302.5       2 1315.12
Downstream     num=       2
    Width   Elev    Width   Elev
*******************************
       2 1302.84       2 1315.12

Pier Data
Pier Station     Upstream= 5042.39    Downstream= 5044.21
Upstream     num=       2
    Width   Elev    Width   Elev
*******************************
       2 1302.65       2 1315.12
Downstream     num=       2
    Width   Elev    Width   Elev
*******************************
       2 1302.17       2 1315.12

Pier Data
Pier Station     Upstream= 5088.54    Downstream= 5090.93
Upstream     num=       2
    Width   Elev    Width   Elev
*******************************
       2 1307.57       2 1315.12
Downstream     num=       2
    Width   Elev    Width   Elev
*******************************
       2 1307.98       2 1315.12

Number of Bridge Coefficient Sets =  1

Low Flow Methods and Data
       Energy
       Momentum                Cd   =    1.33
       Yarnell                 KVal =      .9
```

Selected Low Flow Methods = Highest Energy Answer

High Flow Method
Energy Only

Additional Bridge Parameters
Add Friction component to Momentum
Do not add Weight component to Momentum
Class B flow critical depth computations use critical depth inside the bridge at the upstream end
Criteria to check for pressure flow = Upstream energy grade line

BRIDGE OUTPUT Profile #Design

E.G. US. (ft)	1311.82	Element	Inside BR US		
Inside BR DS					
W.S. US. (ft)	1311.46	E.G. Elev (ft)	1311.80		
1311.65					
Q Total (cfs)	6900.00	W.S. Elev (ft)	1311.40		
1311.24					
Q Bridge (cfs)	6900.00	Crit W.S. (ft)	1307.41		
1307.34					
Q Weir (cfs)		Max Chl Dpth (ft)	9.73		
9.46					
Weir Sta Lft (ft)		Vel Total (ft/s)	5.09		
5.16					
Weir Sta Rgt (ft)		Flow Area (sq ft)	1356.02		
1337.88					
Weir Submerg		Froude # Chl	0.34		
0.35					
Weir Max Depth (ft)		Specif Force (cu ft)	6305.84		
6179.21					
Min El Weir Flow (ft)	1317.54	Hydr Depth (ft)	6.89		
6.74					
Min El Prs (ft)	1314.97	W.P. Total (ft)	255.64		
255.50					
Delta EG (ft)	0.18	Conv. Total (cfs)	204280.8		
199820.7					
Delta WS (ft)	0.19	Top Width (ft)	196.77		
198.39					
BR Open Area (sq ft)	2183.19	Frctn Loss (ft)			
BR Open Vel (ft/s)	5.16	C & E Loss (ft)			
Coef of Q		Shear Total (lb/sq ft)	0.38		
0.39					
Br Sel Method	Momentum	Power Total (lb/ft s)	1.92		
2.01					

BRIDGE OUTPUT Profile #PF 4

E.G. US. (ft)	1315.01	Element	Inside BR US		
Inside BR DS					
W.S. US. (ft)	1314.59	E.G. Elev (ft)	1314.99		
1314.85					
Q Total (cfs)	11730.00	W.S. Elev (ft)	1314.52		
1314.36					
Q Bridge (cfs)	11730.00	Crit W.S. (ft)	1309.05		
1308.96					
Q Weir (cfs)		Max Chl Dpth (ft)	12.85		
12.59					
Weir Sta Lft (ft)		Vel Total (ft/s)	5.47		

```
*       5.62  *
* Weir Sta Rgt (ft)      *            * Flow Area (sq ft)      *    2142.61
*    2085.92  *
* Weir Submerg           *            * Froude # Chl           *       0.34
*       0.35  *
* Weir Max Depth (ft)    *            * Specif Force (cu ft)   *   12621.10
*   12421.37  *
* Min El Weir Flow (ft)  *    1317.54 * Hydr Depth (ft)        *       8.53
*       8.00  *
* Min El Prs (ft)        *    1314.97 * W.P. Total (ft)        *     378.36
*     350.63  *
* Delta EG (ft)          *       0.16 * Conv. Total (cfs)      *   337164.3
*   339209.2  *
* Delta WS (ft)          *       0.18 * Top Width (ft)         *     251.25
*     260.88  *
* BR Open Area (sq ft)   *    2183.19 * Frctn Loss (ft)        *
*              *
* BR Open Vel (ft/s)     *       5.62 * C & E Loss (ft)        *
*              *
* Coef of Q              *            * Shear Total (lb/sq ft) *       0.43
*       0.44  *
* Br Sel Method          *   Momentum * Power Total (lb/ft s)  *       2.34
*       2.50  *
*******************************************************************************
***************
```

CROSS SECTION

RIVER: EMF
REACH: Reach 4 RS: 13.946

INPUT
Description: Higley Road Bridge (Downstream Face). All elevations adjusted up 2.12' for datum change.
6 Span Bridge with Riprap Protection
Manning n Value of .030 used for Channel
Use Field Survey Data for This Cross Section
Skew Angle 41.71 Degrees,
Cross Section Data Adjusted
Station Elevation Data num= 21

```
     Sta    Elev     Sta    Elev     Sta    Elev     Sta    Elev     Sta
Elev
*******************************************************************************
**
  4814.7 1317.08 4855.13 1317.11 4857.13 1317.09 4870.98 1312.36 4892.66
1310.98
 4901.97 1308.98 4920.34 1303.94  4948.7 1303.17 4995.86 1303.84 5004.41
1302.7
 5016.54 1301.77 5027.69 1302.52 5043.04 1303.71  5068.4 1303.34 5089.23
1309.16
    5098 1311.49 5126.96  1312.7 5131.94  1313.8 5136.06 1313.59  5136.2
1317.3
 5171.86 1317.28
```

Manning's n Values num= 3

```
     Sta   n Val     Sta   n Val     Sta   n Val
*************************************************
  4814.7     .04 4857.13     .03  5136.2     .04
```

```
Bank Sta: Left   Right    Lengths: Left Channel   Right     Coeff Contr.
Expan.
       4857.13  5136.2               35  184.27     320             .3
.5
```

Left Levee Station= 4857.13 Elevation= 1317.09
Right Levee Station= 5136.2 Elevation= 1317.3

CROSS SECTION OUTPUT Profile #Design

```
*****************************************************************************
*****************
* E.G. Elev (ft)          * 1311.65  * Element                 *  Left OB *
Channel * Right OB *
* Vel Head (ft)           *    0.38  * Wt. n-Val.              *          *
0.030  *          *
* W.S. Elev (ft)          * 1311.27  * Reach Len. (ft)         *   35.00  *
184.27  *  320.00  *
* Crit W.S. (ft)          * 1307.23  * Flow Area (sq ft)       *          *
1399.77  *          *
* E.G. Slope (ft/ft)      *0.000796  * Area (sq ft)            *          *
1399.77  *          *
* Q Total (cfs)           * 6900.00  * Flow (cfs)              *          *
6900.00  *          *
* Top Width (ft)          *  209.02  * Top Width (ft)          *          *
209.02  *          *
* Vel Total (ft/s)        *    4.93  * Avg. Vel. (ft/s)        *          *
4.93  *          *
* Max Chl Dpth (ft)       *    9.50  * Hydr. Depth (ft)        *          *
6.70  *          *
* Conv. Total (cfs)       *244633.9  * Conv. (cfs)             *
*244633.9  *          *
* Length Wtd. (ft)        *  184.27  * Wetted Per. (ft)        *          *
211.19  *          *
* Min Ch El (ft)          * 1301.77  * Shear (lb/sq ft)        *          *
0.33  *          *
* Alpha                   *    1.00  * Stream Power (lb/ft s)  *          *
1.62  *          *
* Frctn Loss (ft)         *    0.12  * Cum Volume (acre-ft)    *          *
79.64  *          *
* C & E Loss (ft)         *    0.00  * Cum SA (acres)          *          *
11.59  *          *
*****************************************************************************
*****************
```

Note: Multiple critical depths were found at this location. The critical depth with the lowest, valid,
energy was used.

CROSS SECTION OUTPUT Profile #PF 4

```
*****************************************************************************
*****************
* E.G. Elev (ft)          * 1314.85  * Element                 *  Left OB *
Channel * Right OB *
* Vel Head (ft)           *    0.45  * Wt. n-Val.              *          *
0.030  *          *
* W.S. Elev (ft)          * 1314.40  * Reach Len. (ft)         *   35.00  *
184.27  *  320.00  *
* Crit W.S. (ft)          * 1308.86  * Flow Area (sq ft)       *          *
2183.25  *          *
* E.G. Slope (ft/ft)      *0.000741  * Area (sq ft)            *          *
2183.25  *          *
* Q Total (cfs)           *11730.00  * Flow (cfs)              *
*11730.00  *          *
* Top Width (ft)          *  271.09  * Top Width (ft)          *          *
271.09  *          *
* Vel Total (ft/s)        *    5.37  * Avg. Vel. (ft/s)        *          *
5.37  *          *
* Max Chl Dpth (ft)       *   12.63  * Hydr. Depth (ft)        *          *
8.05  *          *
* Conv. Total (cfs)       *430770.7  * Conv. (cfs)             *
*430770.7  *          *
```

```
*-Length Wtd. (ft)        *  184.69  * Wetted Per. (ft)       *          *
274.60  *          *
* Min Ch El (ft)          * 1301.77  * Shear (lb/sq ft)       *          *
0.37  *          *
* Alpha                   *    1.00  * Stream Power (lb/ft s) *          *
1.98  *          *
* Frctn Loss (ft)         *    0.11  * Cum Volume (acre-ft)   *          *
118.45  *    4.46  *
* C & E Loss (ft)         *    0.02  * Cum SA (acres)         *          *
12.68  *    2.97  *
*****************************************************************************
*****************
```

Note: Multiple critical depths were found at this location. The critical depth with the lowest, valid,
energy was used.

CROSS SECTION

RIVER: EMF
REACH: Reach 4 RS: 13.911

INPUT
Description: All elevations adjusted up 2.12' for datum change.
Station Elevation Data num= 16

```
     Sta    Elev     Sta    Elev     Sta    Elev     Sta    Elev     Sta
Elev
*****************************************************************************
**
 4841.43 1317.22 4853.38  1316.5 4870.61 1317.18 4880.66 1316.67 4906.08
1308.62
 4920.61 1303.72 4938.27 1303.31 5001.12    1303 5069.78 1303.67 5074.56
1303.7
 5104.87 1313.32 5116.39 1313.25 5120.37 1312.13  5142.7 1312.39 5166.32
1316.56
 5181.39 1316.92
```

Manning's n Values num= 3

```
     Sta   n Val     Sta   n Val     Sta   n Val
*********************************************
 4841.43     .04 4870.61    .025 5104.87     .04
```

Bank Sta: Left Right Lengths: Left Channel Right Coeff Contr.
Expan.

```
       4870.61 5104.87              275  368.56     380             .3
.5
```

Left Levee Station= 4870.61 Elevation= 1317.18
Right Levee Station= 5104.87 Elevation= 1313.32

CROSS SECTION OUTPUT Profile #Design

```
*****************************************************************************
*****************
* E.G. Elev (ft)          * 1311.52  * Element                 *  Left OB *
Channel * Right OB *
* Vel Head (ft)           *    0.39  * Wt. n-Val.              *          *
0.025  *          *
* W.S. Elev (ft)          * 1311.13  * Reach Len. (ft)         *  275.00  *
368.56  *  380.00  *
* Crit W.S. (ft)          * 1307.20  * Flow Area (sq ft)       *          *
1375.51  *          *
* E.G. Slope (ft/ft)      *0.000552  * Area (sq ft)            *          *
1375.51  *          *
* Q Total (cfs)           * 6900.00  * Flow (cfs)              *          *
6900.00  *          *
* Top Width (ft)          *  199.82  * Top Width (ft)          *          *
```

```
199.82  *          *
* Vel Total (ft/s)       *    5.02  * Avg. Vel. (ft/s)       *          *
5.02  *          *
* Max Chl Dpth (ft)      *    8.13  * Hydr. Depth (ft)       *          *
6.88  *          *
* Conv. Total (cfs)      *293552.2  * Conv. (cfs)            *
*293552.2  *          *
* Length Wtd. (ft)       *  368.56  * Wetted Per. (ft)       *          *
202.17  *          *
* Min Ch El (ft)         * 1303.00  * Shear (lb/sq ft)       *          *
0.23  *          *
* Alpha                  *    1.00  * Stream Power (lb/ft s) *          *
1.18  *          *
* Frctn Loss (ft)        *    0.22  * Cum Volume (acre-ft)   *          *
73.77  *          *
* C & E Loss (ft)        *    0.01  * Cum SA (acres)         *          *
10.72  *          *
*******************************************************************************
*****************

Note:    Multiple critical depths were found at this location.  The critical
depth with the lowest, valid,
         water surface was used.

CROSS SECTION OUTPUT  Profile #PF 4
*******************************************************************************
*****************
* E.G. Elev (ft)         * 1314.72  * Element                *  Left OB *
Channel * Right OB *
* Vel Head (ft)          *    0.51  * Wt. n-Val.             *          *
0.025  *   0.040  *
* W.S. Elev (ft)         * 1314.20  * Reach Len. (ft)        *  275.00  *
368.56  *  380.00  *
* Crit W.S. (ft)         * 1308.79  * Flow Area (sq ft)      *          *
2018.34  *   69.35  *
* E.G. Slope (ft/ft)     *0.000490  * Area (sq ft)           *          *
2018.34  *   69.35  *
* Q Total (cfs)          *11730.00  * Flow (cfs)             *
*11657.50  *   72.50  *
* Top Width (ft)         *  264.53  * Top Width (ft)         *          *
216.42  *   48.11  *
* Vel Total (ft/s)       *    5.62  * Avg. Vel. (ft/s)       *          *
5.78  *    1.05  *
* Max Chl Dpth (ft)      *   11.20  * Hydr. Depth (ft)       *          *
9.33  *    1.44  *
* Conv. Total (cfs)      *529660.8  * Conv. (cfs)            *
*526387.3  *  3273.5  *
* Length Wtd. (ft)       *  368.62  * Wetted Per. (ft)       *          *
219.59  *   48.42  *
* Min Ch El (ft)         * 1303.00  * Shear (lb/sq ft)       *          *
0.28  *    0.04  *
* Alpha                  *    1.05  * Stream Power (lb/ft s) *          *
1.63  *    0.05  *
* Frctn Loss (ft)        *    0.19  * Cum Volume (acre-ft)   *          *
109.56  *    4.21  *
* C & E Loss (ft)        *    0.01  * Cum SA (acres)         *          *
11.65  *    2.80  *
*******************************************************************************
*****************

Note:    Multiple critical depths were found at this location.  The critical
depth with the lowest, valid,
         water surface was used.

CROSS SECTION
```

```
RIVER: EMF
REACH: Reach 4            RS: 13.842

INPUT
Description: All elevations adjusted up 2.12' for datum change.
Station Elevation Data    num=      26
     Sta    Elev     Sta    Elev     Sta    Elev     Sta    Elev     Sta
Elev
*******************************************************************************
**
 4551.05 1321.02 4564.55 1317.24 4611.63 1316.91 4621.86 1316.94 4639.67
1316.83
 4689.87 1316.32 4745.86 1315.89 4829.57 1315.79 4836.88 1315.73 4842.99
1317.83
 4850.21 1315.22 4866.43 1315.39 4870.85 1316.57 4878.98 1316.86 4884.46
1316.85
 4926.45 1303.82 4999.22 1303.11 5003.91 1303.01 5042.99 1303.26 5079.17
1303.53
 5109.48 1313.22 5122.04 1313.39 5126.64 1312.76 5153.02 1312.69 5174.09
1316.82
 5189.06 1316.92

Manning's n Values        num=       3
     Sta   n Val     Sta   n Val     Sta   n Val
*************************************************
 4551.05     .04 4884.46    .025 5109.48     .04

Bank Sta: Left   Right    Lengths: Left Channel   Right     Coeff Contr.
Expan.
       4884.46 5109.48              350  455.16     480             .1
.3
Left Levee      Station= 4842.99      Elevation= 1317.83
Right Levee     Station= 5122.04      Elevation= 1313.39

CROSS SECTION OUTPUT  Profile #Design
*******************************************************************************
*****************
* E.G. Elev (ft)          * 1311.29  * Element                 *  Left OB *
Channel * Right OB *
* Vel Head (ft)           *    0.43  * Wt. n-Val.              *          *
0.025  *          *
* W.S. Elev (ft)          * 1310.86  * Reach Len. (ft)         *  350.00  *
455.16  *  480.00  *
* Crit W.S. (ft)          * 1307.26  * Flow Area (sq ft)       *          *
1310.41  *          *
* E.G. Slope (ft/ft)      *0.000642  * Area (sq ft)            *          *
1310.41  *          *
* Q Total (cfs)           * 6900.00  * Flow (cfs)              *          *
6900.00  *          *
* Top Width (ft)          *  198.33  * Top Width (ft)          *          *
198.33  *          *
* Vel Total (ft/s)        *    5.27  * Avg. Vel. (ft/s)        *          *
5.27  *          *
* Max Chl Dpth (ft)       *    7.85  * Hydr. Depth (ft)        *          *
6.61  *          *
* Conv. Total (cfs)       *272223.3  * Conv. (cfs)             *
*272223.3  *          *
* Length Wtd. (ft)        *  455.16  * Wetted Per. (ft)        *          *
200.55  *          *
* Min Ch El (ft)          * 1303.01  * Shear (lb/sq ft)        *          *
0.26  *          *
* Alpha                   *    1.00  * Stream Power (lb/ft s) *          *
1.38  *          *
* Frctn Loss (ft)         *    0.28  * Cum Volume (acre-ft)    *          *
62.41  *          *
```

```
* C & E Loss (ft)          *    0.01  * Cum SA (acres)          *          *
9.04  *          *
*****************************************************************************
*****************

Note:    Multiple critical depths were found at this location.  The critical
depth with the lowest, valid,
         water surface was used.

CROSS SECTION OUTPUT  Profile #PF 4
*****************************************************************************
*****************
* E.G. Elev (ft)          * 1314.52  * Element                 *  Left OB *
Channel * Right OB *
* Vel Head (ft)           *    0.55  * Wt. n-Val.              *          *
0.025  *   0.040  *
* W.S. Elev (ft)          * 1313.97  * Reach Len. (ft)         *  350.00  *
455.16  *  480.00  *
* Crit W.S. (ft)          * 1308.87  * Flow Area (sq ft)       *          *
1956.20  *   49.25  *
* E.G. Slope (ft/ft)      *0.000544  * Area (sq ft)            *          *
1956.20  *   49.25  *
* Q Total (cfs)           *11730.00  * Flow (cfs)              *
*11687.85  *   42.15  *
* Top Width (ft)          *  265.77  * Top Width (ft)          *          *
215.72  *   50.05  *
* Vel Total (ft/s)        *    5.85  * Avg. Vel. (ft/s)        *          *
5.97  *    0.86  *
* Max Chl Dpth (ft)       *   10.96  * Hydr. Depth (ft)        *          *
9.07  *    0.98  *
* Conv. Total (cfs)       *502694.6  * Conv. (cfs)             *
*500888.3  *  1806.2  *
* Length Wtd. (ft)        *  455.30  * Wetted Per. (ft)        *          *
218.78  *   50.21  *
* Min Ch El (ft)          * 1303.01  * Shear (lb/sq ft)        *          *
0.30  *    0.03  *
* Alpha                   *    1.04  * Stream Power (lb/ft s)  *          *
1.82  *    0.03  *
* Frctn Loss (ft)         *    0.24  * Cum Volume (acre-ft)    *          *
92.75  *    3.69  *
* C & E Loss (ft)         *    0.01  * Cum SA (acres)          *          *
9.82  *    2.37  *
*****************************************************************************
*****************

Note:    Multiple critical depths were found at this location.  The critical
depth with the lowest, valid,
         water surface was used.

CROSS SECTION


RIVER: EMF
REACH: Reach 4            RS: 13.755

INPUT
Description: All elevations adjusted up 2.12' for datum change.
Station Elevation Data    num=      38
     Sta    Elev     Sta    Elev     Sta    Elev     Sta    Elev     Sta
Elev
*****************************************************************************
**
 4346.51 1319.92 4355.11 1319.75 4382.62 1318.89 4410.37 1318.52 4428.28
1318.15
  4437.3 1318.07 4445.43 1317.72 4472.69  1317.7 4489.46 1317.12 4538.68
1316.82
```

```
 4567.32 1316.49 4586.96 1316.11 4603.26  1315.9 4627.02 1316.32 4640.37
1320.8
 4658.19 1319.95 4671.96  1313.9 4689.09 1313.21 4710.97 1313.12 4827.33
1313.09
 4840.54 1319.04  4851.8 1318.68  4859.9 1314.79 4872.31 1315.12 4876.99
1316.52
 4890.52  1316.3 4934.94 1302.89 4945.61 1302.64 4985.71 1302.62  4997.1
1302.88
 5017.45 1302.86 5083.19  1302.9 5114.85 1312.63 5126.01 1312.72 5130.76
1311.8
 5159.16  1311.8 5179.99 1316.08 5184.27 1316.17

Manning's n Values        num=       3
     Sta   n Val     Sta   n Val     Sta   n Val
*********************************************
 4346.51     .04 4890.52    .025 5114.85     .04

Bank Sta: Left   Right    Lengths: Left Channel   Right     Coeff Contr.
Expan.
       4890.52 5114.85              500     500     500             .1
.3
Left Levee      Station= 4876.99      Elevation= 1316.52
Right Levee     Station= 5126.01      Elevation= 1312.72
Blocked Obstructions     num=       2
   Sta L   Sta R    Elev   Sta L   Sta R    Elev
*********************************************
 4346.51    4640 1319.92    4658 4840.54 1319.04

CROSS SECTION OUTPUT  Profile #Design
*******************************************************************************
*****************
* E.G. Elev (ft)         * 1311.00  * Element                 *  Left OB *
Channel * Right OB *
* Vel Head (ft)          *    0.40  * Wt. n-Val.              *          *
0.025  *          *
* W.S. Elev (ft)         * 1310.60  * Reach Len. (ft)         *  500.00  *
500.00  *  500.00  *
* Crit W.S. (ft)         * 1306.73  * Flow Area (sq ft)       *          *
1352.26  *          *
* E.G. Slope (ft/ft)     *0.000581  * Area (sq ft)            *          *
1352.26  *          *
* Q Total (cfs)          * 6900.00  * Flow (cfs)              *          *
6900.00  *          *
* Top Width (ft)         *  198.84  * Top Width (ft)          *          *
198.84  *          *
* Vel Total (ft/s)       *    5.10  * Avg. Vel. (ft/s)        *          *
5.10  *          *
* Max Chl Dpth (ft)      *    7.98  * Hydr. Depth (ft)        *          *
6.80  *          *
* Conv. Total (cfs)      *286299.3  * Conv. (cfs)             *
*286299.3  *          *
* Length Wtd. (ft)       *  500.00  * Wetted Per. (ft)        *          *
201.14  *          *
* Min Ch El (ft)         * 1302.62  * Shear (lb/sq ft)        *          *
0.24  *          *
* Alpha                  *    1.00  * Stream Power (lb/ft s)  *          *
1.24  *          *
* Frctn Loss (ft)        *    0.28  * Cum Volume (acre-ft)    *          *
48.50  *          *
* C & E Loss (ft)        *    0.01  * Cum SA (acres)          *          *
6.96  *          *
*******************************************************************************
*****************

Note:    Multiple critical depths were found at this location.  The critical
depth with the lowest, valid,
```

water surface was used.

CROSS SECTION OUTPUT Profile #PF 4

```
*****************************************************************************
*****************
* E.G. Elev (ft)          * 1314.27  * Element                 *  Left OB *
Channel * Right OB *
* Vel Head (ft)           *    0.52  * Wt. n-Val.               *          *
0.025  *   0.040  *
* W.S. Elev (ft)          * 1313.76  * Reach Len. (ft)          *  500.00  *
500.00  *  500.00  *
* Crit W.S. (ft)          * 1308.37  * Flow Area (sq ft)        *          *
2010.21  *   83.95  *
* E.G. Slope (ft/ft)      *0.000494  * Area (sq ft)             *          *
2010.21  *   83.95  *
* Q Total (cfs)           *11730.00  * Flow (cfs)               *
*11637.15  *   92.85  *
* Top Width (ft)          *  269.72  * Top Width (ft)           *          *
215.90  *   53.82  *
* Vel Total (ft/s)        *    5.60  * Avg. Vel. (ft/s)         *          *
5.79  *    1.11  *
* Max Chl Dpth (ft)       *   11.13  * Hydr. Depth (ft)         *          *
9.31  *    1.56  *
* Conv. Total (cfs)       *528022.6  * Conv. (cfs)              *
*523843.1  *  4179.4  *
* Length Wtd. (ft)        *  500.00  * Wetted Per. (ft)         *          *
218.97  *   54.11  *
* Min Ch El (ft)          * 1302.62  * Shear (lb/sq ft)         *          *
0.28  *    0.05  *
* Alpha                   *    1.06  * Stream Power (lb/ft s)   *          *
1.64  *    0.05  *
* Frctn Loss (ft)         *    0.24  * Cum Volume (acre-ft)     *          *
72.03  *    2.96  *
* C & E Loss (ft)         *    0.01  * Cum SA (acres)           *          *
7.57  *    1.80  *
*****************************************************************************
*****************
```

Note: Multiple critical depths were found at this location. The critical depth with the lowest, valid,
water surface was used.

CROSS SECTION

RIVER: EMF
REACH: Reach 4 RS: 13.661

INPUT
Description: All elevations adjusted up 2.12' for datum change.
Station Elevation Data num= 57

```
     Sta    Elev     Sta    Elev     Sta    Elev     Sta    Elev     Sta
Elev
*****************************************************************************
**
 4183.93 1322.42 4200.85 1321.52 4220.13 1320.06 4220.72 1320.22 4225.26
1318.9
 4229.39 1318.06    4252 1317.46 4259.66 1317.52 4266.52 1317.42 4300.05
1317.55
  4311.8  1318.3 4330.02 1318.89 4358.73 1319.45 4364.51 1316.62 4375.31
1316.99
 4383.32 1316.78 4392.08 1316.73 4396.63 1315.51 4400.77 1316.42 4410.17
1315.02
 4434.72  1315.3 4474.29 1315.52 4481.85  1315.5 4536.21 1316.42 4551.06
1315.9
 4564.86 1316.36 4603.11 1317.45  4609.9 1317.37 4658.58 1315.72 4722.03
```

```
1313.82
 4764.12 1313.41  4788.5 1313.75 4824.21 1314.33 4829.82 1314.42 4834.24
1313.68
 4839.89 1312.04 4846.12 1312.73 4850.08 1314.65  4869.4 1315.62 4878.08
1316.29
 4879.08 1316.13 4890.75 1316.21 4918.56  1307.3 4933.01 1302.82 4959.44
1302.44
 4974.64 1302.18  5000.6 1301.88 5005.74 1301.88 5014.49 1302.22  5021.7
1302.25
 5082.42 1302.48 5115.14 1312.42 5126.79 1312.33 5129.98 1311.12  5159.9
1311.48
 5179.65 1316.17 5192.04 1316.25

Manning's n Values        num=       3
     Sta   n Val     Sta   n Val     Sta   n Val
*********************************************
 4183.93     .04 4890.75    .025 5115.14     .04

Bank Sta: Left   Right    Lengths: Left Channel   Right     Coeff Contr.
Expan.
       4890.75 5115.14              500     500     500             .1
.3
Left Levee      Station= 4890.75      Elevation= 1316.21
Right Levee     Station= 5115.14      Elevation= 1312.42

CROSS SECTION OUTPUT  Profile #Design
*****************************************************************************
*****************
* E.G. Elev (ft)          * 1310.72  * Element                 *  Left OB *
Channel * Right OB *
* Vel Head (ft)           *    0.38  * Wt. n-Val.              *          *
0.025  *          *
* W.S. Elev (ft)          * 1310.34  * Reach Len. (ft)         *  500.00  *
500.00  *  500.00  *
* Crit W.S. (ft)          * 1306.27  * Flow Area (sq ft)       *          *
1392.48  *          *
* E.G. Slope (ft/ft)      *0.000528  * Area (sq ft)            *          *
1392.48  *          *
* Q Total (cfs)           * 6900.00  * Flow (cfs)              *          *
6900.00  *          *
* Top Width (ft)          *  199.22  * Top Width (ft)          *          *
199.22  *          *
* Vel Total (ft/s)        *    4.96  * Avg. Vel. (ft/s)        *          *
4.96  *          *
* Max Chl Dpth (ft)       *    8.46  * Hydr. Depth (ft)        *          *
6.99  *          *
* Conv. Total (cfs)       *300226.8  * Conv. (cfs)             *
*300226.8  *          *
* Length Wtd. (ft)        *  500.00  * Wetted Per. (ft)        *          *
201.55  *          *
* Min Ch El (ft)          * 1301.88  * Shear (lb/sq ft)        *          *
0.23  *          *
* Alpha                   *    1.00  * Stream Power (lb/ft s)  *          *
1.13  *          *
* Frctn Loss (ft)         *    0.27  * Cum Volume (acre-ft)    *          *
32.74  *          *
* C & E Loss (ft)         *    0.00  * Cum SA (acres)          *          *
4.68  *          *
*****************************************************************************
*****************

Note:    Multiple critical depths were found at this location.  The critical
depth with the lowest, valid,
         water surface was used.

CROSS SECTION OUTPUT  Profile #PF 4
```

```
*******************************************************************************
*****************
* E.G. Elev (ft)          * 1314.03  * Element                 *  Left OB *
Channel * Right OB *
* Vel Head (ft)           *    0.49  * Wt. n-Val.               *          *
0.025  *   0.040  *
* W.S. Elev (ft)          * 1313.54  * Reach Len. (ft)          *  500.00  *
500.00  *  500.00  *
* Crit W.S. (ft)          * 1307.89  * Flow Area (sq ft)        *          *
2060.32  *   95.16  *
* E.G. Slope (ft/ft)      *0.000454  * Area (sq ft)             *          *
2060.32  *   95.16  *
* Q Total (cfs)           *11730.00  * Flow (cfs)               *
*11619.96  *  110.04  *
* Top Width (ft)          *  269.47  * Top Width (ft)           *          *
216.05  *   53.42  *
* Vel Total (ft/s)        *    5.44  * Avg. Vel. (ft/s)         *          *
5.64  *    1.16  *
* Max Chl Dpth (ft)       *   11.66  * Hydr. Depth (ft)         *          *
9.54  *    1.78  *
* Conv. Total (cfs)       *550582.9  * Conv. (cfs)              *
*545418.1  *  5164.9  *
* Length Wtd. (ft)        *  500.00  * Wetted Per. (ft)         *          *
219.19  *   53.89  *
* Min Ch El (ft)          * 1301.88  * Shear (lb/sq ft)         *          *
0.27  *    0.05  *
* Alpha                   *    1.06  * Stream Power (lb/ft s)   *          *
1.50  *    0.06  *
* Frctn Loss (ft)         *    0.23  * Cum Volume (acre-ft)     *          *
48.66  *    1.93  *
* C & E Loss (ft)         *    0.00  * Cum SA (acres)           *          *
5.09  *    1.18  *
*******************************************************************************
*****************
```

Note: Multiple critical depths were found at this location. The critical depth with the lowest, valid,
water surface was used.

CROSS SECTION

RIVER: EMF
REACH: Reach 4 RS: 13.566

INPUT
Description: All elevations adjusted up 2.12' for datum change.
Station Elevation Data num= 52

```
     Sta     Elev     Sta     Elev     Sta     Elev     Sta     Elev     Sta
Elev
*******************************************************************************
**
 3918.56 1326.47 3928.99 1322.95 3947.33 1322.82 3952.92 1321.45 3956.52
1322.06
 3965.45 1320.29 3991.61 1319.81 4017.16 1319.32 4056.43 1318.67 4083.12
1318.32
 4133.87 1317.58 4195.22  1316.6 4214.73 1316.42 4263.92 1315.82 4297.79
1315.19
 4348.89 1314.07 4413.87  1313.3 4426.76 1313.32 4485.21 1312.94 4502.82
1313.12
 4509.96 1312.98 4518.57 1313.01 4532.69 1313.32 4542.66 1313.37 4612.34
1314.09
 4640.09 1314.29 4658.32 1314.33 4714.44 1314.62  4774.1 1314.96 4793.19
1315.31
 4806.59 1315.83 4819.28 1316.16 4827.87 1321.32 4840.83 1320.87 4846.28
1316.93
```

```
 4858.79 1316.28 4863.04 1315.39 4875.09 1316.12 4887.86 1316.29 4936.05
1302.56
 4958.48  1302.2 5007.87 1301.87 5042.34 1301.62 5055.28 1301.58 5078.85
1302.04
 5102.61 1309.37 5111.94 1312.17 5127.25 1311.82 5129.61 1311.55 5158.02
1311.29
 5179.18 1316.15 5192.63 1316.49

Manning's n Values        num=       3
     Sta   n Val     Sta   n Val     Sta   n Val
*********************************************
 3918.56     .04 4887.86    .025 5111.94     .04

Bank Sta: Left   Right    Lengths: Left Channel   Right     Coeff Contr.
Expan.
       4887.86 5111.94              500     500     500             .1
.3
Left Levee      Station= 4887.86      Elevation= 1316.29
Right Levee     Station= 5111.94      Elevation= 1312.17

CROSS SECTION OUTPUT  Profile #Design
*****************************************************************************
*****************
* E.G. Elev (ft)          * 1310.45  * Element                 *  Left OB *
Channel * Right OB *
* Vel Head (ft)           *    0.40  * Wt. n-Val.              *          *
0.025  *          *
* W.S. Elev (ft)          * 1310.05  * Reach Len. (ft)         *  500.00  *
500.00  *  500.00  *
* Crit W.S. (ft)          * 1306.03  * Flow Area (sq ft)       *          *
1359.63  *          *
* E.G. Slope (ft/ft)      *0.000556  * Area (sq ft)            *          *
1359.63  *          *
* Q Total (cfs)           * 6900.00  * Flow (cfs)              *          *
6900.00  *          *
* Top Width (ft)          *  195.09  * Top Width (ft)          *          *
195.09  *          *
* Vel Total (ft/s)        *    5.07  * Avg. Vel. (ft/s)        *          *
5.07  *          *
* Max Chl Dpth (ft)       *    8.47  * Hydr. Depth (ft)        *          *
6.97  *          *
* Conv. Total (cfs)       *292589.3  * Conv. (cfs)             *
*292589.3  *          *
* Length Wtd. (ft)        *  500.00  * Wetted Per. (ft)        *          *
197.35  *          *
* Min Ch El (ft)          * 1301.58  * Shear (lb/sq ft)        *          *
0.24  *          *
* Alpha                   *    1.00  * Stream Power (lb/ft s) *          *
1.21  *          *
* Frctn Loss (ft)         *    0.23  * Cum Volume (acre-ft)    *          *
16.95  *          *
* C & E Loss (ft)         *    0.03  * Cum SA (acres)          *          *
2.41  *          *
*****************************************************************************
*****************

Note:    Multiple critical depths were found at this location.  The critical
depth with the lowest, valid,
         water surface was used.

CROSS SECTION OUTPUT  Profile #PF 4
*****************************************************************************
*****************
* E.G. Elev (ft)          * 1313.79  * Element                 *  Left OB *
Channel * Right OB *
* Vel Head (ft)           *    0.51  * Wt. n-Val.              *          *
```

```
0.025  *   0.040  *
* W.S. Elev (ft)          * 1313.28  * Reach Len. (ft)        *  500.00  *
500.00  *  500.00  *
* Crit W.S. (ft)          * 1307.68  * Flow Area (sq ft)      *          *
2024.79  *   85.09  *
* E.G. Slope (ft/ft)      *0.000475  * Area (sq ft)           *          *
2024.79  *   85.09  *
* Q Total (cfs)           *11730.00  * Flow (cfs)             *
*11637.88  *   92.12  *
* Top Width (ft)          *  268.29  * Top Width (ft)         *          *
213.53  *   54.76  *
* Vel Total (ft/s)        *    5.56  * Avg. Vel. (ft/s)       *          *
5.75  *    1.08  *
* Max Chl Dpth (ft)       *   11.70  * Hydr. Depth (ft)       *          *
9.48  *    1.55  *
* Conv. Total (cfs)       *538357.7  * Conv. (cfs)            *
*534129.9  *  4227.8  *
* Length Wtd. (ft)        *  500.00  * Wetted Per. (ft)       *          *
216.55  *   55.01  *
* Min Ch El (ft)          * 1301.58  * Shear (lb/sq ft)       *          *
0.28  *    0.05  *
* Alpha                   *    1.06  * Stream Power (lb/ft s) *          *
1.59  *    0.05  *
* Frctn Loss (ft)         *    0.20  * Cum Volume (acre-ft)   *          *
25.22  *    0.90  *
* C & E Loss (ft)         *    0.04  * Cum SA (acres)         *          *
2.62  *    0.56  *
*******************************************************************************
*****************

Note:    Multiple critical depths were found at this location.  The critical
depth with the lowest, valid,
         water surface was used.

CROSS SECTION


RIVER: EMF
REACH: Reach 4            RS: 13.471

INPUT
Description: Upstream End of Reach 3. All elevations adjusted up 2.12' for
             datum change.
Q(D)=6,900 cfs, Q(F)=8,970 cfs & Q(E)=12,910
             cfs
Start Water Surface Elevations Used for This Cross Section
             Were Calculated from Reach 3 HEC-RAS Runs
Station Elevation Data    num=      32
     Sta    Elev     Sta    Elev     Sta    Elev     Sta    Elev     Sta
Elev
*******************************************************************************
**
 4667.89 1316.02 4683.64 1315.64    4692 1315.52 4706.01 1318.04  4713.6
1319.31
 4722.09 1318.42  4729.7 1318.05 4741.51 1318.12 4778.38  1317.9 4793.66
1317.67
 4800.51 1315.92 4804.12 1317.11 4808.22 1315.83 4826.85  1315.4 4845.01
1315.22
 4856.34 1316.62 4872.16 1316.23 4878.86 1314.37 4922.23 1302.17 4925.17
1302.06
 4959.53 1302.02 5001.83 1301.69 5006.27 1301.72 5057.94 1301.55 5069.75
1301.62
 5093.27 1302.12 5126.43 1311.62 5140.83 1311.39 5142.94 1311.05 5161.38
1311.43
 5180.69 1315.72 5193.03 1316.32
```

```
                                Adjust_Ex_for_Datum
Manning's n Values          num=        3
     Sta   n Val      Sta   n Val      Sta   n Val
**********************************************
 4667.89     .04 4872.16    .025 5126.43     .04

Bank Sta: Left   Right    Lengths: Left Channel   Right     Coeff Contr.
Expan.
       4872.16 5126.43                 0       0       0             .3
.5
Left Levee      Station= 4856.34      Elevation= 1316.62
Right Levee     Station= 5193.03      Elevation= 1316.32

CROSS SECTION OUTPUT  Profile #Design
*****************************************************************************
*****************
* E.G. Elev (ft)          * 1310.18  * Element                 *  Left OB *
Channel * Right OB *
* Vel Head (ft)           *    0.29  * Wt. n-Val.              *          *
0.025  *          *
* W.S. Elev (ft)          * 1309.89  * Reach Len. (ft)         *          *
    *          *
* Crit W.S. (ft)          * 1305.46  * Flow Area (sq ft)       *          *
1593.36  *          *
* E.G. Slope (ft/ft)      *0.000397  * Area (sq ft)            *          *
1593.36  *          *
* Q Total (cfs)           * 6900.00  * Flow (cfs)              *          *
6900.00  *          *
* Top Width (ft)          *  225.61  * Top Width (ft)          *          *
225.61  *          *
* Vel Total (ft/s)        *    4.33  * Avg. Vel. (ft/s)        *          *
4.33  *          *
* Max Chl Dpth (ft)       *    8.34  * Hydr. Depth (ft)        *          *
7.06  *          *
* Conv. Total (cfs)       *346400.0  * Conv. (cfs)             *
*346400.0  *          *
* Length Wtd. (ft)        *          * Wetted Per. (ft)        *          *
227.77  *          *
* Min Ch El (ft)          * 1301.55  * Shear (lb/sq ft)        *          *
0.17  *          *
* Alpha                   *    1.00  * Stream Power (lb/ft s) *          *
0.75  *          *
* Frctn Loss (ft)         *          * Cum Volume (acre-ft)    *          *
    *          *
* C & E Loss (ft)         *          * Cum SA (acres)          *          *
    *          *
*****************************************************************************
*****************

Note:    Multiple critical depths were found at this location.  The critical
depth with the lowest, valid,
         water surface was used.

CROSS SECTION OUTPUT  Profile #PF 4
*****************************************************************************
*****************
* E.G. Elev (ft)          * 1313.55  * Element                 *  Left OB *
Channel * Right OB *
* Vel Head (ft)           *    0.37  * Wt. n-Val.              *          *
0.025  *   0.040  *
* W.S. Elev (ft)          * 1313.18  * Reach Len. (ft)         *          *
    *          *
* Crit W.S. (ft)          * 1306.94  * Flow Area (sq ft)       *          *
2369.49  *   70.92  *
* E.G. Slope (ft/ft)      *0.000335  * Area (sq ft)            *          *
2369.49  *   70.92  *
* Q Total (cfs)           *11730.00  * Flow (cfs)              *
```

```
*11662.74  *   67.26  *
* Top Width (ft)        *  286.17  * Top Width (ft)        *          *
243.34  *   42.83  *
* Vel Total (ft/s)      *    4.81  * Avg. Vel. (ft/s)      *          *
4.92  *    0.95  *
* Max Chl Dpth (ft)     *   11.63  * Hydr. Depth (ft)      *          *
9.74  *    1.66  *
* Conv. Total (cfs)     *640889.9  * Conv. (cfs)           *
*637215.0  *  3674.9  *
* Length Wtd. (ft)      *          * Wetted Per. (ft)      *          *
246.20  *   43.05  *
* Min Ch El (ft)        * 1301.55  * Shear (lb/sq ft)      *          *
0.20  *    0.03  *
* Alpha                 *    1.04  * Stream Power (lb/ft s) *          *
0.99  *    0.03  *
* Frctn Loss (ft)       *          * Cum Volume (acre-ft)  *          *
    *          *
* C & E Loss (ft)       *          * Cum SA (acres)        *          *
    *          *
*******************************************************************************
*****************

Note:    Multiple critical depths were found at this location.  The critical
depth with the lowest, valid,
        water surface was used.

*******************************************************************************
**

SUMMARY OF MANNING'S N VALUES

River:EMF
*****************************************************************
*     Reach      *   River Sta.   *   n1    *   n2    *   n3    *
*****************************************************************
*Reach 4         *    15.035      *      .04*     .025*      .04*
*Reach 4         *    14.926      *      .04*     .025*      .04*
*Reach 4         *    14.823      *      .04*     .025*      .04*
*Reach 4         *    14.764      *      .04*     .025*      .04*
*Reach 4         *    14.754      *      .04*     .025*      .04*
*Reach 4         *    14.738      *      .04*     .025*      .04*
*Reach 4         *    14.637      *      .04*     .025*      .04*
*Reach 4         *    14.412      *      .04*     .025*      .04*
*Reach 4         *    14.3        *      .04*     .025*      .04*
*Reach 4         *    14.191      *      .04*     .025*      .04*
*Reach 4         *    14          *      .04*     .025*      .04*
*Reach 4         *    13.961      *      .04*      .03*      .04*
*Reach 4         *    13.954      *Bridge   *        *         *
*Reach 4         *    13.946      *      .04*      .03*      .04*
*Reach 4         *    13.911      *      .04*     .025*      .04*
*Reach 4         *    13.842      *      .04*     .025*      .04*
*Reach 4         *    13.755      *      .04*     .025*      .04*
*Reach 4         *    13.661      *      .04*     .025*      .04*
*Reach 4         *    13.566      *      .04*     .025*      .04*
*Reach 4         *    13.471      *      .04*     .025*      .04*
*****************************************************************

*******************************************************************************
**

SUMMARY OF REACH LENGTHS

River: EMF
*****************************************************************
*     Reach      *   River Sta.   *  Left   * Channel *  Right  *
*****************************************************************
```

			Adjust_Ex_for_Datum		
*Reach 4	*	15.035	* 574.6*	574.6*	574.6*
*Reach 4	*	14.926	* 915*	545.66*	470*
*Reach 4	*	14.823	* 311.48*	311.48*	311.48*
*Reach 4	*	14.764	* 52.59*	52.59*	52.59*
*Reach 4	*	14.754	* 87.83*	87.83*	87.83*
*Reach 4	*	14.738	* 528.63*	528.63*	528.63*
*Reach 4	*	14.637	* 720*	1188.15*	1270*
*Reach 4	*	14.412	* 594.77*	594.77*	594.77*
*Reach 4	*	14.3	* 840*	571.41*	525*
*Reach 4	*	14.191	* 1011.04*	1011.04*	1011.04*
*Reach 4	*	14	* 390*	204.54*	80*
*Reach 4	*	13.961	* 79.19*	79.19*	79.19*
*Reach 4	*	13.954	*Bridge *	*	*
*Reach 4	*	13.946	* 35*	184.27*	320*
*Reach 4	*	13.911	* 275*	368.56*	380*
*Reach 4	*	13.842	* 350*	455.16*	480*
*Reach 4	*	13.755	* 500*	500*	500*
*Reach 4	*	13.661	* 500*	500*	500*
*Reach 4	*	13.566	* 500*	500*	500*
*Reach 4	*	13.471	* 0*	0*	0*

****

****
**

SUMMARY OF CONTRACTION AND EXPANSION COEFFICIENTS
River: EMF

* Reach	*	River Sta.	* Contr.	* Expan. *
*Reach 4	*	15.035	* .1*	.3*
*Reach 4	*	14.926	* .1*	.3*
*Reach 4	*	14.823	* .1*	.3*
*Reach 4	*	14.764	* .1*	.3*
*Reach 4	*	14.754	* .1*	.3*
*Reach 4	*	14.738	* .1*	.3*
*Reach 4	*	14.637	* .1*	.3*
*Reach 4	*	14.412	* .1*	.3*
*Reach 4	*	14.3	* .1*	.3*
*Reach 4	*	14.191	* .1*	.3*
*Reach 4	*	14	* .3*	.5*
*Reach 4	*	13.961	* .3*	.5*
*Reach 4	*	13.954	*Bridge *	*
*Reach 4	*	13.946	* .3*	.5*
*Reach 4	*	13.911	* .3*	.5*
*Reach 4	*	13.842	* .1*	.3*
*Reach 4	*	13.755	* .1*	.3*
*Reach 4	*	13.661	* .1*	.3*
*Reach 4	*	13.566	* .1*	.3*
*Reach 4	*	13.471	* .3*	.5*

****

****
**

ERRORS WARNINGS AND NOTES
Errors Warnings and Notes for Plan : Ex REACH 4

River: EMF Reach: Reach 4 RS: 15.035 Profile: Design
Note: Multiple critical depths were found at this location. The critical depth with the lowest, valid, water surface was used.
River: EMF Reach: Reach 4 RS: 15.035 Profile: PF 4
Warning:Divided flow computed for this cross-section.
Note: Multiple critical depths were found at this location. The

critical depth with the lowest, valid, water surface was
used.
River: EMF Reach: Reach 4 RS: 14.926 Profile: Design
Note: Multiple critical depths were found at this location. The
critical depth with the lowest, valid, water surface was
used.
River: EMF Reach: Reach 4 RS: 14.926 Profile: PF 4
Warning:The cross-section end points had to be extended vertically for
the computed water surface.
Note: Multiple critical depths were found at this location. The
critical depth with the lowest, valid, water surface was
used.
River: EMF Reach: Reach 4 RS: 14.823 Profile: Design
Note: Multiple critical depths were found at this location. The
critical depth with the lowest, valid, water surface was
used.
River: EMF Reach: Reach 4 RS: 14.823 Profile: PF 4
Warning:The cross-section end points had to be extended vertically for
the computed water surface.
Note: Multiple critical depths were found at this location. The
critical depth with the lowest, valid, water surface was
used.
River: EMF Reach: Reach 4 RS: 14.764 Profile: Design
Warning:The velocity head has changed by more than 0.5 ft (0.15 m). This
may indicate the need for additional cross sections.
Warning:The conveyance ratio (upstream conveyance divided by downstream
conveyance) is less than 0.7 or greater than 1.4.
This may indicate the need for additional cross sections.
Note: Multiple critical depths were found at this location. The
critical depth with the lowest, valid, water surface was
used.
River: EMF Reach: Reach 4 RS: 14.764 Profile: PF 4
Warning:The cross-section end points had to be extended vertically for
the computed water surface.
Warning:The velocity head has changed by more than 0.5 ft (0.15 m). This
may indicate the need for additional cross sections.
Warning:The conveyance ratio (upstream conveyance divided by downstream
conveyance) is less than 0.7 or greater than 1.4.
This may indicate the need for additional cross sections.
Note: Multiple critical depths were found at this location. The
critical depth with the lowest, valid, water surface was
used.
River: EMF Reach: Reach 4 RS: 14.754 Profile: Design
Warning:The energy equation could not be balanced within the specified
number of iterations. The program used critical depth
for the water surface and continued on with the calculations.
Warning:The velocity head has changed by more than 0.5 ft (0.15 m). This
may indicate the need for additional cross sections.
Warning:The conveyance ratio (upstream conveyance divided by downstream
conveyance) is less than 0.7 or greater than 1.4.
This may indicate the need for additional cross sections.
Warning:The energy loss was greater than 1.0 ft (0.3 m). between the
current and previous cross section. This may indicate
the need for additional cross sections.
Warning:During the standard step iterations, when the assumed water
surface was set equal to critical depth, the calculated
water surface came back below critical depth. This indicates
that there is not a valid subcritical answer. The
program defaulted to critical depth.
Note: Multiple critical depths were found at this location. The
critical depth with the lowest, valid, water surface was
used.
River: EMF Reach: Reach 4 RS: 14.754 Profile: PF 4
Warning:The energy equation could not be balanced within the specified
number of iterations. The program used critical depth
for the water surface and continued on with the calculations.

Warning:The velocity head has changed by more than 0.5 ft (0.15 m). This may indicate the need for additional cross sections.

Warning:The conveyance ratio (upstream conveyance divided by downstream conveyance) is less than 0.7 or greater than 1.4.
This may indicate the need for additional cross sections.

Warning:The energy loss was greater than 1.0 ft (0.3 m). between the current and previous cross section. This may indicate
the need for additional cross sections.

Warning:During the standard step iterations, when the assumed water surface was set equal to critical depth, the calculated
water surface came back below critical depth. This indicates that there is not a valid subcritical answer. The
program defaulted to critical depth.

Note: Multiple critical depths were found at this location. The critical depth with the lowest, valid, water surface was
used.

River: EMF Reach: Reach 4 RS: 14.738 Profile: Design

Note: Multiple critical depths were found at this location. The critical depth with the lowest, valid, water surface was
used.

River: EMF Reach: Reach 4 RS: 14.738 Profile: PF 4

Note: Multiple critical depths were found at this location. The critical depth with the lowest, valid, water surface was
used.

River: EMF Reach: Reach 4 RS: 14.637 Profile: Design

Note: Multiple critical depths were found at this location. The critical depth with the lowest, valid, water surface was
used.

River: EMF Reach: Reach 4 RS: 14.637 Profile: PF 4

Note: Multiple critical depths were found at this location. The critical depth with the lowest, valid, water surface was
used.

River: EMF Reach: Reach 4 RS: 14.412 Profile: Design

Note: Multiple critical depths were found at this location. The critical depth with the lowest, valid, water surface was
used.

River: EMF Reach: Reach 4 RS: 14.412 Profile: PF 4

Note: Multiple critical depths were found at this location. The critical depth with the lowest, valid, water surface was
used.

River: EMF Reach: Reach 4 RS: 14.3 Profile: Design

Note: Multiple critical depths were found at this location. The critical depth with the lowest, valid, water surface was
used.

River: EMF Reach: Reach 4 RS: 14.3 Profile: PF 4

Note: Multiple critical depths were found at this location. The critical depth with the lowest, valid, water surface was
used.

River: EMF Reach: Reach 4 RS: 14.191 Profile: Design

Note: Multiple critical depths were found at this location. The critical depth with the lowest, valid, water surface was
used.

River: EMF Reach: Reach 4 RS: 14.191 Profile: PF 4

Note: Multiple critical depths were found at this location. The critical depth with the lowest, valid, water surface was
used.

River: EMF Reach: Reach 4 RS: 14 Profile: Design

Note: Multiple critical depths were found at this location. The critical depth with the lowest, valid, water surface was
used.

River: EMF Reach: Reach 4 RS: 14 Profile: PF 4

Note: Multiple critical depths were found at this location. The critical depth with the lowest, valid, water surface was
used.

River: EMF Reach: Reach 4 RS: 13.961 Profile: Design

Note: Multiple critical depths were found at this location. The

critical depth with the lowest, valid, energy was used.
River: EMF Reach: Reach 4 RS: 13.961 Profile: PF 4
Note: Multiple critical depths were found at this location. The critical depth with the lowest, valid, energy was used.
River: EMF Reach: Reach 4 RS: 13.946 Profile: Design
Note: Multiple critical depths were found at this location. The critical depth with the lowest, valid, energy was used.
River: EMF Reach: Reach 4 RS: 13.946 Profile: PF 4
Note: Multiple critical depths were found at this location. The critical depth with the lowest, valid, energy was used.
River: EMF Reach: Reach 4 RS: 13.911 Profile: Design
Note: Multiple critical depths were found at this location. The critical depth with the lowest, valid, water surface was used.
River: EMF Reach: Reach 4 RS: 13.911 Profile: PF 4
Note: Multiple critical depths were found at this location. The critical depth with the lowest, valid, water surface was used.
River: EMF Reach: Reach 4 RS: 13.842 Profile: Design
Note: Multiple critical depths were found at this location. The critical depth with the lowest, valid, water surface was used.
River: EMF Reach: Reach 4 RS: 13.842 Profile: PF 4
Note: Multiple critical depths were found at this location. The critical depth with the lowest, valid, water surface was used.
River: EMF Reach: Reach 4 RS: 13.755 Profile: Design
Note: Multiple critical depths were found at this location. The critical depth with the lowest, valid, water surface was used.
River: EMF Reach: Reach 4 RS: 13.755 Profile: PF 4
Note: Multiple critical depths were found at this location. The critical depth with the lowest, valid, water surface was used.
River: EMF Reach: Reach 4 RS: 13.661 Profile: Design
Note: Multiple critical depths were found at this location. The critical depth with the lowest, valid, water surface was used.
River: EMF Reach: Reach 4 RS: 13.661 Profile: PF 4
Note: Multiple critical depths were found at this location. The critical depth with the lowest, valid, water surface was used.
River: EMF Reach: Reach 4 RS: 13.566 Profile: Design
Note: Multiple critical depths were found at this location. The critical depth with the lowest, valid, water surface was used.
River: EMF Reach: Reach 4 RS: 13.566 Profile: PF 4
Note: Multiple critical depths were found at this location. The critical depth with the lowest, valid, water surface was used.
River: EMF Reach: Reach 4 RS: 13.471 Profile: Design
Note: Multiple critical depths were found at this location. The critical depth with the lowest, valid, water surface was used.
River: EMF Reach: Reach 4 RS: 13.471 Profile: PF 4
Note: Multiple critical depths were found at this location. The critical depth with the lowest, valid, water surface was used.

Proposed Model HEC-RAS Analysis

Adjusted_Prop_for_datum

HEC-RAS Version 3.1.3 May 2005
U.S. Army Corp of Engineers
Hydrologic Engineering Center
609 Second Street
Davis, California

```
X     X  XXXXXX    XXXX        XXXX       XX      XXXX
X     X  X        X    X      X   X     X  X    X
X     X  X        X           X   X    X    X   X
XXXXXXX  XXXX     X       XXX XXXX     XXXXXX    XXXX
X     X  X        X           X  X     X    X        X
X     X  X        X    X      X   X    X    X        X
X     X  XXXXXX    XXXX       X    X   X    X   XXXXX
```

****
**

PROJECT DATA
Project Title: Prop EMF Reach 4 (8-13-08), 97-06-Revise
Project File : Adjusted_Prop_for_datum.prj
Run Date and Time: 8/28/2008 11:01:51 AM

Project in English units

Project Description:
EAST MARICOPA FLOODWAY CAPACITY ASSESSMENT (Reach 4)
FCDMC Contract No.
97-06
Prepared by HNTB Corporation, January 1999
Contact: B. Gary Sun
HNTB
Corporation
40 North Central Avenue, Suite 300
Phoenix, Arizona 85004
(602)
528-4300

Edited by Aztec, April 2008
Contact Sarah Smedley
Aztec
4561 E.
McDowell Road
Phoenix, AZ 85008
602-458-9269

REACH 4
from 1.081 miles
north of the Higley Road Bridge to Queen Creek Road
(River Mile 15.035 to Mile
13.471)

The Purpose of the Study is to Determine Channel Capacity for the
Design Discharge.
The Water Surface Profile Was Calculated Using the U.S.
Army Corps of Engineers' HEC-RAS Computer Program, Version 3.1.3, Dated May
2005, as Implemented by Haestad Methods, Inc.

Subcritical Flow Run
1 Water
Surface Profile with 100-Year Discharge Provided by FCDMC (Dated
6-10-98)
Profile 1 - Design Discharge

The Control Line on the Thalweg of
East Maricopa Floodway is Station 5,000, and All Cross
Section Data were
Stationed Looking Downstream. Cross Section Numbers Indicate in River
Miles
above the Top of Drop Structure at the Downstream of the East Maricopa
Floodway.

Starting Water Surface Elevations Used are the Calculated Water
Surface Elevations from the Surface Profile Calculated at River Mile 13.471
from Reach 3 HEC-RAS Runs. ******* Autodesk, Inc. HEC-2 Input Data file
****
********** Minimum Data Input **********

****

****
**

PLAN DATA

Plan Title: Prop Reach 4
Plan File :
r:\Phoenix\Projects\AZE0810_Higley-DB\Technical\Drainage\HEC-RAS\Adjusted_Prop
_for_datum.p01

Geometry Title: EMF Reach 4
Geometry File :
r:\Phoenix\Projects\AZE0810_Higley-DB\Technical\Drainage\HEC-RAS\Adjusted_Prop
_for_datum.g01

Flow Title : 1-Design, 2-Future, 3-Exist, 4-Full Bank
Flow File :
r:\Phoenix\Projects\AZE0810_Higley-DB\Technical\Drainage\HEC-RAS\Adjusted_Prop
_for_datum.f01

Plan Summary Information:

Number of:	Cross Sections	= 19	Multiple Openings	=	0
	Culverts	= 0	Inline Structures	=	0
	Bridges	= 1	Lateral Structures	=	0

Computational Information
Water surface calculation tolerance = 0.01
Critical depth calculation tolerance = 0.01
Maximum number of iterations = 20
Maximum difference tolerance = 0.3
Flow tolerance factor = 0.001

Computation Options
Critical depth computed only where necessary
Conveyance Calculation Method: At breaks in n values only
Friction Slope Method: Average Conveyance
Computational Flow Regime: Subcritical Flow

****
**

FLOW DATA

Flow Title: 1-Design, 2-Future, 3-Exist, 4-Full Bank
Flow File :
r:\Phoenix\Projects\AZE0810_Higley-DB\Technical\Drainage\HEC-RAS\Adjusted_Prop

_for_datum.f01

Flow Data (cfs)
****
****
* River Reach RS * Design Future
Existing Full Bank PF 5 *
* EMF Reach 4 15.035 * 6900 8770
12750 20000 11730 *
* EMF Reach 4 14.637 * 6900 8890
12830 20000 11730 *
* EMF Reach 4 13.471 * 6900 8970
12910 20000 11730 *
****
****

Boundary Conditions
****
****
* River Reach Profile * Upstream
Downstream *
****
****
* EMF Reach 4 Design *
Known WS = 1309.89 *
* EMF Reach 4 Future *
Known WS = 1311.2 *
* EMF Reach 4 Existing *
Known WS = 1313.18 *
* EMF Reach 4 Full Bank *
Known WS = 1313.18 *
* EMF Reach 4 PF 5 *
Known WS = 1313.18 *
****
****

****
**

GEOMETRY DATA

Geometry Title: EMF Reach 4
Geometry File :
r:\Phoenix\Projects\AZE0810_Higley-DB\Technical\Drainage\HEC-RAS\Adjusted_Prop
_for_datum.g01

CROSS SECTION

RIVER: EMF
REACH: Reach 4 RS: 15.035

INPUT
Description: All elevations adjusted up 2.12' for datum change.
Station Elevation Data num= 46
Sta Elev Sta Elev Sta Elev Sta Elev Sta
Elev
****
**
3705.97 1321.84 3713.4 1321.53 3738.74 1320.74 3776.67 1320.8 3819.2
1320.92
3955.75 1320.58 4040.64 1320.59 4069.35 1320.48 4114.46 1320.2 4182.97
1320.02
4262.09 1319.61 4296.59 1319.41 4335.9 1319.32 4411.86 1319.06 4523.8
1318.92
4619.5 1318.75 4637.4 1318.68 4658.35 1318.68 4751.02 1318.56 4777

```
1318.12
 4790.45 1317.65 4798.95 1318.48 4808.42 1318.48 4851.64 1318.19 4852.81
1318.82
  4855.6 1318.27 4863.77 1317.74 4874.96 1318.19 4879.92 1319.62 4892.66
1319.62
 4903.41 1316.62 4928.29 1309.79 4955.37 1309.53 4978.24 1309.12 4991.56
1309.12
 5000.55 1308.99 5020.31    1309 5071.55 1309.12 5074.58 1309.58 5082.83
1312.42
 5107.43 1319.53 5118.41 1319.87 5122.89 1318.92 5158.53 1319.16 5169.23
1320.72
 5183.62 1321.55

Manning's n Values        num=       3
     Sta   n Val     Sta   n Val     Sta   n Val
*********************************************
 3705.97     .04 4892.66    .025 5107.43     .04

Bank Sta: Left   Right    Lengths: Left Channel   Right     Coeff Contr.
Expan.
       4892.66 5107.43            574.6   574.6   574.6             .1
.3
Left Levee      Station= 4892.66      Elevation= 1319.62
Right Levee     Station= 5118.41      Elevation= 1319.87

CROSS SECTION OUTPUT  Profile #Design
*****************************************************************************
*****************
* E.G. Elev (ft)          * 1318.14  * Element                 *  Left OB *
Channel * Right OB *
* Vel Head (ft)           *    0.34  * Wt. n-Val.              *          *
0.025  *          *
* W.S. Elev (ft)          * 1317.80  * Reach Len. (ft)         *  574.60  *
574.60  *  574.60  *
* Crit W.S. (ft)          * 1313.25  * Flow Area (sq ft)       *          *
1478.37  *          *
* E.G. Slope (ft/ft)      *0.000441  * Area (sq ft)            *          *
1478.37  *          *
* Q Total (cfs)           * 6900.00  * Flow (cfs)              *          *
6900.00  *          *
* Top Width (ft)          *  202.24  * Top Width (ft)          *          *
202.24  *          *
* Vel Total (ft/s)        *    4.67  * Avg. Vel. (ft/s)        *          *
4.67  *          *
* Max Chl Dpth (ft)       *    8.81  * Hydr. Depth (ft)        *          *
7.31  *          *
* Conv. Total (cfs)       *328413.2  * Conv. (cfs)             *
*328413.2  *          *
* Length Wtd. (ft)        *  574.60  * Wetted Per. (ft)        *          *
204.60  *          *
* Min Ch El (ft)          * 1308.99  * Shear (lb/sq ft)        *          *
0.20  *          *
* Alpha                   *    1.00  * Stream Power (lb/ft s)  *          *
0.93  *          *
* Frctn Loss (ft)         *    0.24  * Cum Volume (acre-ft)    *          *
272.69  *          *
* C & E Loss (ft)         *    0.01  * Cum SA (acres)          *          *
37.90  *          *
*****************************************************************************
*****************

Note:    Multiple critical depths were found at this location.  The critical
depth with the lowest, valid,
         water surface was used.

CROSS SECTION OUTPUT  Profile #PF 5
```

```
*****************************************************************************
*****************
* E.G. Elev (ft)          * 1321.17  * Element                 *  Left OB *
Channel * Right OB *
* Vel Head (ft)           *    0.33  * Wt. n-Val.              *   0.040  *
0.025  *   0.040  *
* W.S. Elev (ft)          * 1320.84  * Reach Len. (ft)         *  574.60  *
574.60  *  574.60  *
* Crit W.S. (ft)          * 1314.90  * Flow Area (sq ft)       * 1463.72  *
2120.16  *   92.74  *
* E.G. Slope (ft/ft)      *0.000328  * Area (sq ft)            * 1463.72  *
2120.16  *   92.74  *
* Q Total (cfs)           *11730.00  * Flow (cfs)              * 1232.99
*10417.11  *   79.89  *
* Top Width (ft)          * 1373.28  * Top Width (ft)          * 1094.67  *
214.77  *   63.84  *
* Vel Total (ft/s)        *    3.19  * Avg. Vel. (ft/s)        *    0.84  *
4.91  *    0.86  *
* Max Chl Dpth (ft)       *   11.85  * Hydr. Depth (ft)        *    1.34  *
9.87  *    1.45  *
* Conv. Total (cfs)       *647266.9  * Conv. (cfs)             * 68037.1
*574821.2  *  4408.6  *
* Length Wtd. (ft)        *  574.60  * Wetted Per. (ft)        * 1095.17  *
217.62  *   64.06  *
* Min Ch El (ft)          * 1308.99  * Shear (lb/sq ft)        *    0.03  *
0.20  *    0.03  *
* Alpha                   *    2.11  * Stream Power (lb/ft s) *    0.02  *
0.98  *    0.03  *
* Frctn Loss (ft)         *    0.18  * Cum Volume (acre-ft)    *  133.50  *
398.71  *   12.90  *
* C & E Loss (ft)         *    0.01  * Cum SA (acres)          *  100.20  *
40.32  *    9.01  *
*****************************************************************************
*****************
```

Warning: Divided flow computed for this cross-section.
Note: Multiple critical depths were found at this location. The critical depth with the lowest, valid,
water surface was used.

CROSS SECTION

RIVER: EMF
REACH: Reach 4 RS: 14.926

INPUT
Description: All elevations adjusted up 2.12' for datum change.
Station Elevation Data num= 36

```
     Sta    Elev     Sta    Elev     Sta    Elev     Sta    Elev     Sta
Elev
*****************************************************************************
**
 3721.04 1321.44 3759.55 1321.23 3788.85 1321.17 3873.17 1321.07 3917.44
1321.22
 3986.79 1320.82 3999.54  1320.8 4100.39 1320.42 4138.86 1320.24 4218.39
1319.82
 4327.61 1319.19 4441.22 1318.99 4507.93 1318.87 4554.83 1318.76 4581.74
1318.62
 4668.45 1318.25 4729.37 1318.12 4782.05 1317.82 4849.61 1317.64 4853.45
1318.22
 4857.68 1317.76 4862.84 1317.62 4880.37 1318.84 4893.22 1318.83 4902.24
1316.32
 4927.71 1309.35 4976.94  1308.8  5006.8  1308.4 5037.93 1308.42  5071.9
1308.72
 5107.23 1319.77 5119.72 1319.12 5123.11  1318.4 5159.52 1318.48 5170.49
```

```
1320.22
 5183.69 1320.44

Manning's n Values          num=        3
     Sta   n Val      Sta   n Val      Sta   n Val
*********************************************
 3721.04     .04 4893.22    .025 5107.23     .04

Bank Sta: Left   Right    Lengths: Left Channel   Right     Coeff Contr.
Expan.
       4893.22 5107.23              915  545.66     470             .1
.3
Left Levee      Station= 4893.22      Elevation= 1318.83
Right Levee     Station= 5107.23      Elevation= 1319.77

CROSS SECTION OUTPUT  Profile #Design
*****************************************************************************
*****************
* E.G. Elev (ft)          * 1317.89  * Element                 *  Left OB *
Channel * Right OB *
* Vel Head (ft)           *    0.32  * Wt. n-Val.              *          *
0.025  *          *
* W.S. Elev (ft)          * 1317.57  * Reach Len. (ft)         *  915.00  *
545.66  *  470.00  *
* Crit W.S. (ft)          * 1312.76  * Flow Area (sq ft)       *          *
1525.79  *          *
* E.G. Slope (ft/ft)      *0.000398  * Area (sq ft)            *          *
1525.79  *          *
* Q Total (cfs)           * 6900.00  * Flow (cfs)              *          *
6900.00  *          *
* Top Width (ft)          *  202.46  * Top Width (ft)          *          *
202.46  *          *
* Vel Total (ft/s)        *    4.52  * Avg. Vel. (ft/s)        *          *
4.52  *          *
* Max Chl Dpth (ft)       *    9.17  * Hydr. Depth (ft)        *          *
7.54  *          *
* Conv. Total (cfs)       *345794.4  * Conv. (cfs)             *
*345794.4  *          *
* Length Wtd. (ft)        *  545.66  * Wetted Per. (ft)        *          *
204.92  *          *
* Min Ch El (ft)          * 1308.40  * Shear (lb/sq ft)        *          *
0.19  *          *
* Alpha                   *    1.00  * Stream Power (lb/ft s)  *          *
0.84  *          *
* Frctn Loss (ft)         *    0.22  * Cum Volume (acre-ft)    *          *
252.87  *          *
* C & E Loss (ft)         *    0.00  * Cum SA (acres)          *          *
35.23  *          *
*****************************************************************************
*****************

Note:    Multiple critical depths were found at this location.  The critical
depth with the lowest, valid,
         water surface was used.

CROSS SECTION OUTPUT  Profile #PF 5
*****************************************************************************
*****************
* E.G. Elev (ft)          * 1320.99  * Element                 *  Left OB *
Channel * Right OB *
* Vel Head (ft)           *    0.31  * Wt. n-Val.              *   0.040  *
0.025  *   0.040  *
* W.S. Elev (ft)          * 1320.68  * Reach Len. (ft)         *  915.00  *
545.66  *  470.00  *
* Crit W.S. (ft)          * 1314.41  * Flow Area (sq ft)       * 1430.20  *
2179.68  *  122.40  *
```

```
                                Adjusted_Prop_for_datum
 * E.G. Slope (ft/ft)      *0.000294  * Area (sq ft)           * 1430.20  *
 2179.68  *  122.40  *
 * Q Total (cfs)           *11730.00  * Flow (cfs)             * 1278.28
 *10345.43  *  106.29  *
 * Top Width (ft)          * 1151.24  * Top Width (ft)         *  860.77  *
 214.01  *   76.46  *
 * Vel Total (ft/s)        *    3.14  * Avg. Vel. (ft/s)       *    0.89  *
 4.75  *    0.87  *
 * Max Chl Dpth (ft)       *   12.28  * Hydr. Depth (ft)       *    1.66  *
 10.18  *    1.60  *
 * Conv. Total (cfs)       *683870.5  * Conv. (cfs)            * 74524.8
 *603148.7  *  6197.0  *
 * Length Wtd. (ft)        *  606.15  * Wetted Per. (ft)       *  860.88  *
 216.98  *   76.93  *
 * Min Ch El (ft)          * 1308.40  * Shear (lb/sq ft)       *    0.03  *
 0.18  *    0.03  *
 * Alpha                   *    2.02  * Stream Power (lb/ft s) *    0.03  *
 0.88  *    0.03  *
 * Frctn Loss (ft)         *    0.16  * Cum Volume (acre-ft)   *  114.41  *
 370.35  *   11.49  *
 * C & E Loss (ft)         *    0.03  * Cum SA (acres)         *   87.31  *
 37.50  *    8.08  *
*******************************************************************************
*****************

Warning: The cross-section end points had to be extended vertically for the
computed water surface.
Note:    Multiple critical depths were found at this location.  The critical
depth with the lowest, valid,
         water surface was used.

CROSS SECTION


RIVER: EMF
REACH: Reach 4            RS: 14.823

INPUT
Description: All elevations adjusted up 2.12' for datum change.
Station Elevation Data    num=      39
     Sta    Elev     Sta    Elev     Sta    Elev     Sta    Elev     Sta
Elev
*******************************************************************************
**
 3552.69  1320.4 3674.44  1319.1 3717.53 1318.96 3761.03 1318.73 3874.01
1318.72
    3987 1318.66 4059.23 1318.59    4100 1318.58 4212.99 1318.46 4231.23
1318.42
 4325.97 1318.35 4429.45 1318.16  4503.5 1318.05 4551.96 1318.04 4577.54
1318.12
 4664.95 1317.94 4707.96  1317.7 4777.93 1317.42 4809.95 1317.57 4849.69
1318.32
 4852.62 1318.94 4855.68 1318.18 4862.67  1317.6 4871.34  1319.4 4891.15
1319.62
 4903.39 1315.83 4926.14 1309.25 4941.88 1308.85 4979.02 1308.51 5002.17
1308.52
 5013.27 1308.62 5038.64 1308.65 5070.05 1308.65 5109.75 1319.64 5128.17
1319.12
 5131.51 1318.56  5159.5 1318.63 5172.07 1320.21 5184.52 1321.27

Manning's n Values        num=       3
     Sta   n Val     Sta   n Val     Sta   n Val
*************************************************
 3552.69     .04 4891.15    .025 5109.75     .04

Bank Sta: Left   Right    Lengths: Left Channel   Right     Coeff Contr.
```

```
Expan.
      4891.15 5109.75          311.48  311.48  311.48            .1
.3
Left Levee      Station= 4891.15      Elevation= 1319.62
Right Levee     Station= 5109.75      Elevation= 1319.64

CROSS SECTION OUTPUT  Profile #Design
*****************************************************************************
*****************
* E.G. Elev (ft)          * 1317.66  * Element                 *  Left OB *
Channel * Right OB *
* Vel Head (ft)           *    0.33  * Wt. n-Val.              *          *
0.025  *          *
* W.S. Elev (ft)          * 1317.33  * Reach Len. (ft)         *  311.48  *
311.48  *  311.48  *
* Crit W.S. (ft)          * 1312.72  * Flow Area (sq ft)       *          *
1495.29  *          *
* E.G. Slope (ft/ft)      *0.000427  * Area (sq ft)            *          *
1495.29  *          *
* Q Total (cfs)           * 6900.00  * Flow (cfs)              *          *
6900.00  *          *
* Top Width (ft)          *  202.88  * Top Width (ft)          *          *
202.88  *          *
* Vel Total (ft/s)        *    4.61  * Avg. Vel. (ft/s)        *          *
4.61  *          *
* Max Chl Dpth (ft)       *    8.82  * Hydr. Depth (ft)        *          *
7.37  *          *
* Conv. Total (cfs)       *334028.3  * Conv. (cfs)             *
*334028.3  *          *
* Length Wtd. (ft)        *  311.48  * Wetted Per. (ft)        *          *
205.22  *          *
* Min Ch El (ft)          * 1308.51  * Shear (lb/sq ft)        *          *
0.19  *          *
* Alpha                   *    1.00  * Stream Power (lb/ft s)  *          *
0.90  *          *
* Frctn Loss (ft)         *    0.13  * Cum Volume (acre-ft)    *          *
233.95  *          *
* C & E Loss (ft)         *    0.00  * Cum SA (acres)          *          *
32.69  *          *
*****************************************************************************
*****************

Note:    Multiple critical depths were found at this location.  The critical
depth with the lowest, valid,
         water surface was used.

CROSS SECTION OUTPUT  Profile #PF 5
*****************************************************************************
*****************
* E.G. Elev (ft)          * 1320.80  * Element                 *  Left OB *
Channel * Right OB *
* Vel Head (ft)           *    0.21  * Wt. n-Val.              *   0.040  *
0.025  *   0.040  *
* W.S. Elev (ft)          * 1320.59  * Reach Len. (ft)         *  311.48  *
311.48  *  311.48  *
* Crit W.S. (ft)          * 1314.36  * Flow Area (sq ft)       * 2819.58  *
2189.41  *   99.55  *
* E.G. Slope (ft/ft)      *0.000228  * Area (sq ft)            * 2819.58  *
2189.41  *   99.55  *
* Q Total (cfs)           *11730.00  * Flow (cfs)              * 2600.87  *
9056.32  *   72.81  *
* Top Width (ft)          * 1623.85  * Top Width (ft)          * 1338.46  *
218.60  *   66.79  *
* Vel Total (ft/s)        *    2.30  * Avg. Vel. (ft/s)        *    0.92  *
4.14  *    0.73  *
* Max Chl Dpth (ft)       *   12.08  * Hydr. Depth (ft)        *    2.11  *
```

```
10.02  *    1.49  *
* Conv. Total (cfs)      *776055.0  * Conv. (cfs)            *172073.2
*599164.4  *  4817.3  *
* Length Wtd. (ft)       *  311.48  * Wetted Per. (ft)       * 1339.04  *
221.61  *   66.96  *
* Min Ch El (ft)         * 1308.51  * Shear (lb/sq ft)       *    0.03  *
0.14  *    0.02  *
* Alpha                  *    2.54  * Stream Power (lb/ft s) *    0.03  *
0.58  *    0.02  *
* Frctn Loss (ft)        *    0.06  * Cum Volume (acre-ft)   *   69.78  *
342.99  *   10.29  *
* C & E Loss (ft)        *    0.01  * Cum SA (acres)         *   64.21  *
34.79  *    7.31  *
*******************************************************************************
*****************

Warning: The cross-section end points had to be extended vertically for the
computed water surface.
Note:    Multiple critical depths were found at this location.  The critical
depth with the lowest, valid,
         water surface was used.

CROSS SECTION


RIVER: EMF
REACH: Reach 4            RS: 14.764

INPUT
Description: Upstream End of 70' Wide Low Drop Structure. All elevations
             adjusted up 2.12' for datum change.
Station Elevation Data    num=      48
     Sta    Elev     Sta    Elev     Sta    Elev     Sta    Elev     Sta
Elev
*******************************************************************************
**
 3422.47 1320.12 3524.94 1319.03 3567.37 1318.89 3570.53 1319.22 3571.59
1318.92
 3644.85 1318.66 3666.31  1318.7 3740.35 1318.44 3819.18 1318.37 3924.87
1318.22
 3962.47 1318.24 4042.17 1318.11 4150.85 1317.97 4248.78 1317.96 4376.83
1317.72
 4406.74 1317.68 4489.82 1317.61  4518.9 1317.66 4678.42 1317.77 4715.79
1317.72
 4763.52 1317.41 4821.84 1317.09    4833 1317.44 4835.29 1317.78 4850.37
1317.92
 4853.04 1318.56 4855.73 1318.07 4864.53 1317.64 4878.42 1318.93 4891.75
1318.92
 4911.38 1313.19 4924.49 1309.02 4928.62 1308.91 4953.96 1308.54 4967.95
1308.42
  5001.7 1308.62 5010.45 1308.57 5049.66 1308.68 5056.31    1309 5077.43
1309.72
 5080.37  1309.8 5090.21 1312.78 5106.85 1319.72 5120.15 1319.51 5124.07
1318.02
 5159.53 1318.94 5168.49 1320.29 5183.77 1321.03

Manning's n Values        num=       3
     Sta   n Val     Sta   n Val     Sta   n Val
*************************************************
 3422.47     .04 4891.75    .025 5106.85     .04

Bank Sta: Left   Right    Lengths: Left Channel   Right     Coeff Contr.
Expan.
       4891.75 5106.85            52.59   52.59   52.59             .1
.3
Left Levee      Station= 4891.75      Elevation= 1318.92
```

Right Levee Station= 5106.85 Elevation= 1319.72

CROSS SECTION OUTPUT Profile #Design

```
*****************************************************************************
*****************
* E.G. Elev (ft)          * 1317.53  * Element                 *  Left OB *
Channel * Right OB *
* Vel Head (ft)           *    0.32  * Wt. n-Val.              *          *
0.025  *          *
* W.S. Elev (ft)          * 1317.21  * Reach Len. (ft)          *   52.59  *
52.59  *   52.59  *
* Crit W.S. (ft)          * 1312.64  * Flow Area (sq ft)        *          *
1508.36  *          *
* E.G. Slope (ft/ft)      *0.000416  * Area (sq ft)             *          *
1508.36  *          *
* Q Total (cfs)           * 6900.00  * Flow (cfs)               *          *
6900.00  *          *
* Top Width (ft)          *  203.20  * Top Width (ft)           *          *
203.20  *          *
* Vel Total (ft/s)        *    4.57  * Avg. Vel. (ft/s)         *          *
4.57  *          *
* Max Chl Dpth (ft)       *    8.79  * Hydr. Depth (ft)         *          *
7.42  *          *
* Conv. Total (cfs)       *338303.6  * Conv. (cfs)              *
*338303.6  *          *
* Length Wtd. (ft)        *   52.59  * Wetted Per. (ft)         *          *
205.77  *          *
* Min Ch El (ft)          * 1308.42  * Shear (lb/sq ft)         *          *
0.19  *          *
* Alpha                   *    1.00  * Stream Power (lb/ft s)   *          *
0.87  *          *
* Frctn Loss (ft)         *    0.05  * Cum Volume (acre-ft)     *          *
223.21  *          *
* C & E Loss (ft)         *    0.22  * Cum SA (acres)           *          *
31.24  *          *
*****************************************************************************
*****************
```

Warning: The velocity head has changed by more than 0.5 ft (0.15 m). This may indicate the need for
additional cross sections.
Warning: The conveyance ratio (upstream conveyance divided by downstream conveyance) is less than
0.7 or greater than 1.4. This may indicate the need for additional cross sections.
Note: Multiple critical depths were found at this location. The critical depth with the lowest, valid,
water surface was used.

CROSS SECTION OUTPUT Profile #PF 5

```
*****************************************************************************
*****************
* E.G. Elev (ft)          * 1320.72  * Element                 *  Left OB *
Channel * Right OB *
* Vel Head (ft)           *    0.17  * Wt. n-Val.              *   0.040  *
0.025  *   0.040  *
* W.S. Elev (ft)          * 1320.56  * Reach Len. (ft)          *   52.59  *
52.59  *   52.59  *
* Crit W.S. (ft)          * 1314.22  * Flow Area (sq ft)        * 3531.03  *
2216.42  *  102.29  *
* E.G. Slope (ft/ft)      *0.000187  * Area (sq ft)             * 3531.03  *
2216.42  *  102.29  *
* Q Total (cfs)           *11730.00  * Flow (cfs)               * 3217.37  *
8444.08  *   68.55  *
* Top Width (ft)          * 1751.51  * Top Width (ft)           * 1469.28  *
215.10  *   67.13  *
```

```
                                   Adjusted_Prop_for_datum
* Vel Total (ft/s)        *    2.01  * Avg. Vel. (ft/s)       *    0.91  *
3.81  *    0.67  *
* Max Chl Dpth (ft)       *   12.14  * Hydr. Depth (ft)       *    2.40  *
10.30  *    1.52  *
* Conv. Total (cfs)       *857739.8  * Conv. (cfs)            *235265.7
*617461.7  *  5012.4  *
* Length Wtd. (ft)        *   52.59  * Wetted Per. (ft)       * 1470.01  *
218.42  *   67.52  *
* Min Ch El (ft)          * 1308.42  * Shear (lb/sq ft)       *    0.03  *
0.12  *    0.02  *
* Alpha                   *    2.66  * Stream Power (lb/ft s) *    0.03  *
0.45  *    0.01  *
* Frctn Loss (ft)         *    0.03  * Cum Volume (acre-ft)   *   47.07  *
327.23  *    9.57  *
* C & E Loss (ft)         *    0.32  * Cum SA (acres)         *   54.17  *
33.24  *    6.83  *
*****************************************************************************
*****************

Warning: The cross-section end points had to be extended vertically for the
computed water surface.
Warning: The velocity head has changed by more than 0.5 ft (0.15 m).  This may
indicate the need for
         additional cross sections.
Warning: The conveyance ratio (upstream conveyance divided by downstream
conveyance) is less than
         0.7 or greater than 1.4.  This may indicate the need for additional
cross sections.
Note:    Multiple critical depths were found at this location.  The critical
depth with the lowest, valid,
         water surface was used.

CROSS SECTION


RIVER: EMF
REACH: Reach 4            RS: 14.754

INPUT
Description: Wier Crest of 70' Wide Low Drop Structure. All elevations
adjusted
             up 2.12' for datum change.
Station Elevation Data    num=      50
     Sta    Elev     Sta    Elev     Sta    Elev     Sta    Elev     Sta
Elev
*****************************************************************************
**
 3400.48 1320.08 3499.69 1319.02 3547.73 1318.86 3551.31 1319.23 3552.51
1318.92
 3622.02 1318.65 3649.96  1318.7 3726.55 1318.41 3839.53 1318.23 3973.09
1318.12
 4065.51 1318.03 4148.82 1317.93 4211.45 1317.82 4363.61  1317.6 4404.48
1317.62
 4449.81 1317.58 4517.47 1317.55 4578.45 1317.66 4630.46 1317.71 4743.44
1317.62
 4782.29 1317.32 4829.36 1316.95 4834.13 1317.67 4849.85 1317.93 4853.18
1318.82
 4864.53 1317.56 4877.11 1319.12 4914.93 1319.23 4922.02 1319.11 4927.71
1318.72
 4936.21 1318.79 4954.85 1312.18 4959.83 1310.85 4965.99 1308.74 4998.87
1308.62
  5021.8 1308.57 5035.55 1308.44 5041.61 1310.53  5049.5 1312.78 5062.21
1318.32
 5065.12 1319.04 5078.45 1319.05 5090.06 1319.61 5096.42 1319.73 5109.24
1319.82
 5119.37 1319.55 5122.93 1318.21 5156.46 1318.96 5169.34 1319.99 5184.16
```

1320.72

Manning's n Values num= 3

Sta	n Val	Sta	n Val	Sta	n Val
3400.48	.04	4936.21	.025	5065.12	.04

Bank Sta: Left	Right	Lengths: Left	Channel	Right	Coeff Contr.	Expan.
4936.21	5065.12	87.83	87.83	87.83	.1	.3

Left Levee Station= 4914.93 Elevation= 1319.23
Right Levee Station= 5109.24 Elevation= 1319.82

CROSS SECTION OUTPUT Profile #Design

E.G. Elev (ft)	1317.25	Element		Left OB	Channel	Right OB
Vel Head (ft)	2.55	Wt. n-Val.			0.025	
W.S. Elev (ft)	1314.71	Reach Len. (ft)		87.83	87.83	87.83
Crit W.S. (ft)	1314.71	Flow Area (sq ft)			538.66	
E.G. Slope (ft/ft)	0.005465	Area (sq ft)			538.66	
Q Total (cfs)	6900.00	Flow (cfs)			6900.00	
Top Width (ft)	106.19	Top Width (ft)			106.19	
Vel Total (ft/s)	12.81	Avg. Vel. (ft/s)			12.81	
Max Chl Dpth (ft)	6.27	Hydr. Depth (ft)			5.07	
Conv. Total (cfs)	93334.2	Conv. (cfs)			93334.2	
Length Wtd. (ft)	87.83	Wetted Per. (ft)			108.22	
Min Ch El (ft)	1308.44	Shear (lb/sq ft)			1.70	
Alpha	1.00	Stream Power (lb/ft s)			21.75	
Frctn Loss (ft)	0.13	Cum Volume (acre-ft)			221.98	
C & E Loss (ft)	0.61	Cum SA (acres)			31.06	

Warning: The energy equation could not be balanced within the specified number of iterations. The
program used critical depth for the water surface and continued on with the calculations.
Warning: The velocity head has changed by more than 0.5 ft (0.15 m). This may indicate the need for
additional cross sections.
Warning: The conveyance ratio (upstream conveyance divided by downstream conveyance) is less than
0.7 or greater than 1.4. This may indicate the need for additional cross sections.
Warning: The energy loss was greater than 1.0 ft (0.3 m). between the current and previous cross
section. This may indicate the need for additional cross sections.
Warning: During the standard step iterations, when the assumed water surface was set equal to critical

depth, the calculated water surface came back below critical depth. This indicates that there
is not a valid subcritical answer. The program defaulted to critical depth.
Note: Multiple critical depths were found at this location. The critical depth with the lowest, valid,
water surface was used.

CROSS SECTION OUTPUT Profile #PF 5

E.G. Elev (ft)	1320.38	Element	Left OB	Channel	Right OB
Vel Head (ft)	3.36	Wt. n-Val.		0.025	
W.S. Elev (ft)	1317.02	Reach Len. (ft)	87.83	87.83	87.83
Crit W.S. (ft)	1317.02	Flow Area (sq ft)		797.59	
E.G. Slope (ft/ft)	0.004949	Area (sq ft)		797.59	
Q Total (cfs)	11730.00	Flow (cfs)		11730.00	
Top Width (ft)	118.01	Top Width (ft)		118.01	
Vel Total (ft/s)	14.71	Avg. Vel. (ft/s)		14.71	
Max Chl Dpth (ft)	8.58	Hydr. Depth (ft)		6.76	
Conv. Total (cfs)	166740.4	Conv. (cfs)		166740.4	
Length Wtd. (ft)	87.83	Wetted Per. (ft)		120.91	
Min Ch El (ft)	1308.44	Shear (lb/sq ft)		2.04	
Alpha	1.00	Stream Power (lb/ft s)		29.97	
Frctn Loss (ft)	0.13	Cum Volume (acre-ft)	44.94	325.41	9.50
C & E Loss (ft)	0.79	Cum SA (acres)	53.28	33.03	6.79

Warning: The energy equation could not be balanced within the specified number of iterations. The
program used critical depth for the water surface and continued on with the calculations.
Warning: The velocity head has changed by more than 0.5 ft (0.15 m). This may indicate the need for
additional cross sections.
Warning: The conveyance ratio (upstream conveyance divided by downstream conveyance) is less than
0.7 or greater than 1.4. This may indicate the need for additional cross sections.
Warning: The energy loss was greater than 1.0 ft (0.3 m). between the current and previous cross
section. This may indicate the need for additional cross sections.
Warning: During the standard step iterations, when the assumed water surface was set equal to critical
depth, the calculated water surface came back below critical depth. This indicates that there
is not a valid subcritical answer. The program defaulted to critical depth.
Note: Multiple critical depths were found at this location. The critical depth with the lowest, valid,

Adjusted_Prop_for_datum
water surface was used.

CROSS SECTION

RIVER: EMF
REACH: Reach 4 RS: 14.738

INPUT
Description: Downstream End of 70' Wide Low Drop Structure. All elevations adjusted up 2.12' for datum change.
Station Elevation Data num= 60

Sta	Elev	Sta	Elev	Sta	Elev	Sta	Elev	Sta	Elev
3363.76	1320	3457.54	1319	3514.95	1318.81	3519.23	1319.26	3520.66	1318.82
3583.9	1318.62	3622.68	1318.69	3687.41	1318.45	3696.73	1318.45	3703.17	1318.62
3726.82	1318.3	3772.74	1318.07	3885.72	1318.04	3998.71	1317.96	4066.94	1317.92
4111.71	1317.76	4140.99	1317.7	4196.67	1317.55	4255.81	1317.55	4337.68	1317.62
4411.46	1317.62	4450.67	1317.58	4511.21	1317.45	4563.67	1317.42	4676.64	1317.52
4789.64	1317.33	4818.76	1317.19	4830.01	1317.04	4834.78	1317.77	4850.4	1318.12
4856.05	1318.01	4865.15	1316.64	4873.08	1317.72	4877.36	1318.12	4889.59	1318.36
4903.47	1318.81	4909.72	1316.72	4916.23	1313.84	4938.22	1306.72	4940.73	1306.42
4947.04	1304.55	4966.63	1304.54	4983.02	1304.57	4993.81	1304.82	4999.54	1304.87
5014.94	1304.63	5033.25	1304.61	5045	1304.69	5049.38	1304.62	5054.09	1304.79
5060.35	1305.32	5063.2	1305.73	5073.86	1309.87	5085.66	1313.52	5097.92	1318.81
5120.78	1318.52	5124.39	1317.29	5152.73	1317.53	5170.68	1319.32	5184.65	1320.59

Manning's n Values num= 3

Sta	n Val	Sta	n Val	Sta	n Val
3363.76	.04	4903.47	.025	5097.92	.04

Bank Sta: Left	Right	Lengths: Left	Channel	Right	Coeff Contr.	Expan.
4903.47	5097.92	528.63	528.63	528.63	.1	.3

Left Levee Station= 4903.47 Elevation= 1318.81
Right Levee Station= 5097.92 Elevation= 1318.81

CROSS SECTION OUTPUT Profile #Design

* E.G. Elev (ft)	* 1313.80	* Element	* Left OB	Channel	* Right OB *
* Vel Head (ft)	* 0.50	* Wt. n-Val.	*	0.025	* *
* W.S. Elev (ft)	* 1313.30	* Reach Len. (ft)	* 528.63	528.63	* 528.63 *
* Crit W.S. (ft)	* 1309.32	* Flow Area (sq ft)	*	1210.87	* *
* E.G. Slope (ft/ft)	*0.000669	* Area (sq ft)	*	1210.87	* *

Adjusted_Prop_for_datum

```
* Q Total (cfs)          * 6900.00  * Flow (cfs)              *          *
6900.00  *          *
* Top Width (ft)         *  167.04  * Top Width (ft)          *          *
167.04  *          *
* Vel Total (ft/s)       *    5.70  * Avg. Vel. (ft/s)        *          *
5.70  *          *
* Max Chl Dpth (ft)      *    8.76  * Hydr. Depth (ft)        *          *
7.25  *          *
* Conv. Total (cfs)      *266723.3  * Conv. (cfs)             *
*266723.3  *          *
* Length Wtd. (ft)       *  528.63  * Wetted Per. (ft)        *          *
169.72  *          *
* Min Ch El (ft)         * 1304.54  * Shear (lb/sq ft)        *          *
0.30  *          *
* Alpha                  *    1.00  * Stream Power (lb/ft s)  *          *
1.70  *          *
* Frctn Loss (ft)        *    0.26  * Cum Volume (acre-ft)    *          *
220.21  *          *
* C & E Loss (ft)        *    0.06  * Cum SA (acres)          *          *
30.78  *          *
*****************************************************************************
*****************
```

Note: Multiple critical depths were found at this location. The critical depth with the lowest, valid,
water surface was used.

CROSS SECTION OUTPUT Profile #PF 5

```
*****************************************************************************
*****************
* E.G. Elev (ft)         * 1316.97  * Element                 *  Left OB *
Channel * Right OB *
* Vel Head (ft)          *    0.72  * Wt. n-Val.              *          *
0.025  *          *
* W.S. Elev (ft)         * 1316.26  * Reach Len. (ft)         *  528.63  *
528.63  *  528.63  *
* Crit W.S. (ft)         * 1311.16  * Flow Area (sq ft)       *          *
1726.85  *          *
* E.G. Slope (ft/ft)     *0.000665  * Area (sq ft)            *          *
1726.85  *          *
* Q Total (cfs)          *11730.00  * Flow (cfs)              *
*11730.00  *          *
* Top Width (ft)         *  181.23  * Top Width (ft)          *          *
181.23  *          *
* Vel Total (ft/s)       *    6.79  * Avg. Vel. (ft/s)        *          *
6.79  *          *
* Max Chl Dpth (ft)      *   11.72  * Hydr. Depth (ft)        *          *
9.53  *          *
* Conv. Total (cfs)      *454840.0  * Conv. (cfs)             *
*454840.0  *          *
* Length Wtd. (ft)       *  528.63  * Wetted Per. (ft)        *          *
185.11  *          *
* Min Ch El (ft)         * 1304.54  * Shear (lb/sq ft)        *          *
0.39  *          *
* Alpha                  *    1.00  * Stream Power (lb/ft s)  *          *
2.63  *          *
* Frctn Loss (ft)        *    0.24  * Cum Volume (acre-ft)    *   44.94  *
322.87  *    9.50  *
* C & E Loss (ft)        *    0.11  * Cum SA (acres)          *   53.28  *
32.73  *    6.79  *
*****************************************************************************
*****************
```

Warning: The conveyance ratio (upstream conveyance divided by downstream conveyance) is less than
0.7 or greater than 1.4. This may indicate the need for additional

```
cross sections.
Note:    Multiple critical depths were found at this location.  The critical
depth with the lowest, valid,
         water surface was used.

CROSS SECTION


RIVER: EMF
REACH: Reach 4            RS: 14.637

INPUT
Description: Q(D)=6,900 cfs, Q(F)=8,890 cfs & Q(E)=12,830 cfs. All elevations
             adjusted up 2.12' for datum change.
Station Elevation Data    num=      62
     Sta    Elev     Sta    Elev     Sta    Elev     Sta    Elev     Sta
Elev
*******************************************************************************
**
 3142.76 1319.54 3203.81 1318.88 3317.64  1318.5 3326.11  1319.4 3328.96
1318.52
 3354.49 1318.46 3458.47 1318.65 3468.96 1318.61  3500.2 1318.62 3532.52
1318.72
 3598.83 1318.64 3663.09 1318.73 3699.13 1318.73    3702 1318.95 3717.46
1319.22
 3722.79 1318.89 3728.25 1318.16 3798.92 1317.67  3824.8 1317.42 3836.06
1317.46
 3849.18 1317.36 3888.48 1317.19 3894.96 1317.82 3932.07 1318.02 3943.85
1317.44
 3963.78 1317.06 3969.89    1317 3981.05 1316.52 3986.96 1315.92 4050.86
1315.68
 4124.87  1315.7 4163.79 1315.66 4198.92 1315.65 4276.77 1315.42 4346.99
1315.3
 4421.04 1315.25 4480.49 1315.24 4502.76 1315.18 4569.13 1314.82 4643.18
1314.66
  4695.3 1314.56 4728.73 1314.51 4828.89 1314.92 4838.75 1315.42 4852.41
1315.87
 4855.25 1314.42 4865.15 1313.42 4878.33 1315.06 4894.16 1314.82 4928.52
1304.45
 4937.29  1304.4 5010.82 1304.41 5034.56 1304.29 5064.52 1304.52 5077.51
1305.01
 5096.24 1309.89 5115.93 1315.09 5128.36 1315.61 5132.63 1314.92 5149.24
1315.35
 5169.91 1318.34  5184.9 1319.58

Manning's n Values        num=       3
     Sta   n Val     Sta   n Val     Sta   n Val
************************************************
 3142.76     .04 4894.16    .025 5115.93     .04

Bank Sta: Left   Right    Lengths: Left Channel   Right     Coeff Contr.
Expan.
       4894.16 5115.93              720 1188.15    1270             .1
.3
Ineffective Flow     num=       1
   Sta L   Sta R    Elev  Permanent
 3142.76 3932.07 1319.12       F
Left Levee      Station= 4852.41      Elevation= 1315.87
Right Levee     Station= 5128.36      Elevation= 1315.61

CROSS SECTION OUTPUT  Profile #Design
*******************************************************************************
*****************
* E.G. Elev (ft)          * 1313.48  * Element                 *  Left OB *
Channel * Right OB *
* Vel Head (ft)           *    0.31  * Wt. n-Val.              *          *
```

```
0.025  *          *
* W.S. Elev (ft)          * 1313.17  * Reach Len. (ft)        *  720.00  *
1188.15  * 1270.00  *
* Crit W.S. (ft)          * 1308.39  * Flow Area (sq ft)      *          *
1556.37  *          *
* E.G. Slope (ft/ft)      *0.000388  * Area (sq ft)           *          *
1556.37  *          *
* Q Total (cfs)           * 6900.00  * Flow (cfs)             *          *
6900.00  *          *
* Top Width (ft)          *  209.05  * Top Width (ft)         *          *
209.05  *          *
* Vel Total (ft/s)        *    4.43  * Avg. Vel. (ft/s)       *          *
4.43  *          *
* Max Chl Dpth (ft)       *    8.88  * Hydr. Depth (ft)       *          *
7.44  *          *
* Conv. Total (cfs)       *350084.4  * Conv. (cfs)            *
*350084.4  *          *
* Length Wtd. (ft)        * 1188.15  * Wetted Per. (ft)       *          *
211.40  *          *
* Min Ch El (ft)          * 1304.29  * Shear (lb/sq ft)       *          *
0.18  *          *
* Alpha                   *    1.00  * Stream Power (lb/ft s) *          *
0.79  *          *
* Frctn Loss (ft)         *    0.49  * Cum Volume (acre-ft)   *          *
203.42  *          *
* C & E Loss (ft)         *    0.00  * Cum SA (acres)         *          *
28.50  *          *
*******************************************************************************
*****************
```

Note: Multiple critical depths were found at this location. The critical depth with the lowest, valid,
water surface was used.

CROSS SECTION OUTPUT Profile #PF 5

```
*******************************************************************************
*****************
* E.G. Elev (ft)          * 1316.63  * Element                *  Left OB *
Channel * Right OB *
* Vel Head (ft)           *    0.35  * Wt. n-Val.             *   0.040  *
0.025  *   0.040  *
* W.S. Elev (ft)          * 1316.27  * Reach Len. (ft)        *  720.00  *
1188.15  * 1270.00  *
* Crit W.S. (ft)          * 1310.00  * Flow Area (sq ft)      *  991.54  *
2232.45  *   37.62  *
* E.G. Slope (ft/ft)      *0.000322  * Area (sq ft)           *  991.54  *
2232.45  *   37.62  *
* Q Total (cfs)           *11730.00  * Flow (cfs)             *  699.23
*11006.63  *   24.14  *
* Top Width (ft)          * 1172.14  * Top Width (ft)         *  910.68  *
221.77  *   39.69  *
* Vel Total (ft/s)        *    3.60  * Avg. Vel. (ft/s)       *    0.71  *
4.93  *    0.64  *
* Max Chl Dpth (ft)       *   11.98  * Hydr. Depth (ft)       *    1.09  *
10.07  *    0.95  *
* Conv. Total (cfs)       *653702.5  * Conv. (cfs)            * 38967.3
*613389.9  *  1345.2  *
* Length Wtd. (ft)        * 1169.27  * Wetted Per. (ft)       *  911.22  *
224.61  *   39.83  *
* Min Ch El (ft)          * 1304.29  * Shear (lb/sq ft)       *    0.02  *
0.20  *    0.02  *
* Alpha                   *    1.77  * Stream Power (lb/ft s) *    0.02  *
0.99  *    0.01  *
* Frctn Loss (ft)         *    0.41  * Cum Volume (acre-ft)   *   38.92  *
298.84  *    9.28  *
* C & E Loss (ft)         *    0.01  * Cum SA (acres)         *   47.76  *
```

```
30.29  *    6.55  *
*****************************************************************************
*****************

Note:    Multiple critical depths were found at this location.  The critical
depth with the lowest, valid,
         water surface was used.

CROSS SECTION


RIVER: EMF
REACH: Reach 4            RS: 14.412

INPUT
Description: All elevations adjusted up 2.12' for datum change.
Station Elevation Data    num=      54
     Sta    Elev     Sta    Elev     Sta    Elev     Sta    Elev     Sta
Elev
*****************************************************************************
**
 3422.92 1319.48 3475.55 1318.86 3595.99 1318.41 3605.55 1319.44 3608.78
1318.42
 3621.36  1318.4 3682.92 1318.52  3698.6 1318.41 3744.61 1318.28 3760.04
1318.32
 3764.05 1319.22 3781.11  1319.3 3786.52 1318.29 3798.82  1317.8 3802.95
1318.32
 3812.51 1317.68 3814.38 1317.18 3835.67  1316.9 3846.42 1316.62 3911.92
1316.57
 3957.49 1316.46 3973.35 1316.45 4068.54 1316.22 4126.87 1315.92 4197.98
1315.71
 4290.68 1315.61 4341.83 1315.52 4401.75 1315.37 4512.82 1315.02 4572.37
1314.88
 4623.88 1314.76 4695.57 1314.74 4734.96 1314.71 4819.86 1314.72 4825.97
1315.39
 4845.06 1315.36 4857.32 1313.94 4871.73 1314.68 4885.65 1314.62 4898.05
1310.78
 4919.22 1304.26 4964.77 1303.98 4993.91 1303.83  4994.5 1303.72 5009.11
1304
 5066.41 1304.65 5099.61 1314.62 5112.58  1314.4 5115.39 1313.82 5140.16
1314.06
 5161.77 1318.45  5171.5 1318.35 5175.35 1318.57 5177.04 1319.22

Manning's n Values        num=       3
     Sta   n Val     Sta   n Val     Sta   n Val
*************************************************
 3422.92     .04 4885.65    .025 5099.61     .04

Bank Sta: Left   Right    Lengths: Left Channel   Right     Coeff Contr.
Expan.
       4885.65 5099.61           594.77  594.77  594.77             .1
.3
Left Levee      Station= 4845.06      Elevation= 1315.36
Right Levee     Station= 5099.61      Elevation= 1314.62

CROSS SECTION OUTPUT  Profile #Design
*****************************************************************************
*****************
* E.G. Elev (ft)          * 1312.98  * Element                 *  Left OB *
Channel * Right OB *
* Vel Head (ft)           *    0.34  * Wt. n-Val.              *          *
0.025  *          *
* W.S. Elev (ft)          * 1312.64  * Reach Len. (ft)         *  594.77  *
594.77  *  594.77  *
* Crit W.S. (ft)          * 1308.13  * Flow Area (sq ft)       *          *
1473.05  *          *
```

```
                                Adjusted_Prop_for_datum
* E.G. Slope (ft/ft)      *0.000443  * Area (sq ft)            *          *
1473.05  *          *
* Q Total (cfs)           * 6900.00  * Flow (cfs)              *          *
6900.00  *          *
* Top Width (ft)          *  200.98  * Top Width (ft)          *          *
200.98  *          *
* Vel Total (ft/s)        *    4.68  * Avg. Vel. (ft/s)        *          *
4.68  *          *
* Max Chl Dpth (ft)       *    8.92  * Hydr. Depth (ft)        *          *
7.33  *          *
* Conv. Total (cfs)       *327693.8  * Conv. (cfs)             *
*327693.8  *          *
* Length Wtd. (ft)        *  594.77  * Wetted Per. (ft)        *          *
203.43  *          *
* Min Ch El (ft)          * 1303.72  * Shear (lb/sq ft)        *          *
0.20  *          *
* Alpha                   *    1.00  * Stream Power (lb/ft s) *          *
0.94  *          *
* Frctn Loss (ft)         *    0.26  * Cum Volume (acre-ft)    *          *
162.11  *          *
* C & E Loss (ft)         *    0.00  * Cum SA (acres)          *          *
22.91  *          *
*******************************************************************************
*****************

Note:    Multiple critical depths were found at this location.  The critical
depth with the lowest, valid,
         water surface was used.

CROSS SECTION OUTPUT  Profile #PF 5
*******************************************************************************
*****************
* E.G. Elev (ft)          * 1316.21  * Element                 *  Left OB *
Channel * Right OB *
* Vel Head (ft)           *    0.43  * Wt. n-Val.              *   0.040  *
0.025  *   0.040  *
* W.S. Elev (ft)          * 1315.78  * Reach Len. (ft)         *  594.77  *
594.77  *  594.77  *
* Crit W.S. (ft)          * 1309.76  * Flow Area (sq ft)       *  473.91  *
2131.31  *   73.90  *
* E.G. Slope (ft/ft)      *0.000385  * Area (sq ft)            *  473.91  *
2131.31  *   73.90  *
* Q Total (cfs)           *11730.00  * Flow (cfs)              *  263.57
*11395.84  *   70.59  *
* Top Width (ft)          *  973.53  * Top Width (ft)          *  710.56  *
213.96  *   49.00  *
* Vel Total (ft/s)        *    4.38  * Avg. Vel. (ft/s)        *    0.56  *
5.35  *    0.96  *
* Max Chl Dpth (ft)       *   12.06  * Hydr. Depth (ft)        *    0.67  *
9.96  *    1.51  *
* Conv. Total (cfs)       *598005.8  * Conv. (cfs)             * 13437.0
*580969.9  *  3598.9  *
* Length Wtd. (ft)        *  594.77  * Wetted Per. (ft)        *  710.70  *
217.00  *   49.24  *
* Min Ch El (ft)          * 1303.72  * Shear (lb/sq ft)        *    0.02  *
0.24  *    0.04  *
* Alpha                   *    1.45  * Stream Power (lb/ft s) *    0.01  *
1.26  *    0.03  *
* Frctn Loss (ft)         *    0.23  * Cum Volume (acre-ft)    *   26.81  *
239.33  *    7.65  *
* C & E Loss (ft)         *    0.00  * Cum SA (acres)          *   34.36  *
24.35  *    5.26  *
*******************************************************************************
*****************

Note:    Multiple critical depths were found at this location.  The critical
```

Adjusted_Prop_for_datum
depth with the lowest, valid,
water surface was used.

CROSS SECTION

RIVER: EMF
REACH: Reach 4 RS: 14.3

INPUT
Description: All elevations adjusted up 2.12' for datum change.
Station Elevation Data num= 42

```
     Sta    Elev     Sta    Elev     Sta    Elev     Sta    Elev     Sta
Elev
*****************************************************************************
**
 3566.83 1319.02 3589.22 1318.75 3663.88 1318.47 3665.33 1316.58 3671.76
1317.5
 3673.16 1317.42 3698.46 1316.94 3731.24 1316.88 3781.07 1316.68 3857.96
1316.43
 3892.15 1316.32 3955.87 1316.33  4003.2 1316.24 4087.76 1315.92 4114.28
1315.84
  4180.5 1315.82 4317.55 1315.56 4405.13 1315.33 4447.47 1315.33 4480.01
1315.13
 4558.56 1314.72 4669.63 1314.59 4704.65 1314.56 4781.72 1314.36 4820.93
1314.55
 4825.52 1315.02  4844.9 1314.71  4847.8 1314.08 4855.97 1313.49 4871.58
1314.61
 4885.81 1314.32 4891.36 1312.68 4920.49    1304 5003.16 1303.66 5063.74
1303.9
 5089.82 1311.32  5100.3 1314.28 5112.06  1314.1 5115.09 1313.43 5138.86
1313.69
 5159.66 1318.02 5174.16 1318.26
```

Manning's n Values num= 3

```
     Sta   n Val     Sta   n Val     Sta   n Val
*****************************************
 3566.83     .04 4885.81    .025  5100.3     .04
```

```
Bank Sta: Left   Right    Lengths: Left Channel   Right     Coeff Contr.
Expan.
       4885.81  5100.3              840  571.41     525             .1
.3
Left Levee      Station= 4871.58      Elevation= 1314.61
Right Levee     Station=  5100.3      Elevation= 1314.28
```

CROSS SECTION OUTPUT Profile #Design

```
*****************************************************************************
*****************
* E.G. Elev (ft)         * 1312.72  * Element               *  Left OB *
Channel * Right OB *
* Vel Head (ft)          *    0.34  * Wt. n-Val.            *          *
0.025  *          *
* W.S. Elev (ft)         * 1312.38  * Reach Len. (ft)       *  840.00  *
571.41  *  525.00  *
* Crit W.S. (ft)         * 1307.86  * Flow Area (sq ft)     *          *
1471.26  *          *
* E.G. Slope (ft/ft)     *0.000446  * Area (sq ft)          *          *
1471.26  *          *
* Q Total (cfs)          * 6900.00  * Flow (cfs)            *          *
6900.00  *          *
* Top Width (ft)         *  201.18  * Top Width (ft)        *          *
201.18  *          *
* Vel Total (ft/s)       *    4.69  * Avg. Vel. (ft/s)      *          *
4.69  *          *
* Max Chl Dpth (ft)      *    8.72  * Hydr. Depth (ft)      *          *
```

```
7.31  *          *
* Conv. Total (cfs)      *326869.2  * Conv. (cfs)            *
*326869.2  *          *
* Length Wtd. (ft)       *  571.41  * Wetted Per. (ft)       *          *
203.58  *          *
* Min Ch El (ft)         * 1303.66  * Shear (lb/sq ft)       *          *
0.20  *          *
* Alpha                  *    1.00  * Stream Power (lb/ft s) *          *
0.94  *          *
* Frctn Loss (ft)        *    0.25  * Cum Volume (acre-ft)   *          *
142.01  *          *
* C & E Loss (ft)        *    0.00  * Cum SA (acres)         *          *
20.16  *          *
*******************************************************************************
*****************

Note:    Multiple critical depths were found at this location.  The critical
depth with the lowest, valid,
         water surface was used.

CROSS SECTION OUTPUT  Profile #PF 5
*******************************************************************************
*****************
* E.G. Elev (ft)         * 1315.98  * Element                *  Left OB *
Channel * Right OB *
* Vel Head (ft)          *    0.43  * Wt. n-Val.             *   0.040  *
0.025  *   0.040  *
* W.S. Elev (ft)         * 1315.55  * Reach Len. (ft)        *  840.00  *
571.41  *  525.00  *
* Crit W.S. (ft)         * 1309.50  * Flow Area (sq ft)      *  412.59  *
2139.46  *   77.07  *
* E.G. Slope (ft/ft)     *0.000382  * Area (sq ft)           *  412.59  *
2139.46  *   77.07  *
* Q Total (cfs)          *11730.00  * Flow (cfs)             *  242.87
*11410.17  *   76.96  *
* Top Width (ft)         *  826.86  * Top Width (ft)         *  564.87  *
214.49  *   47.50  *
* Vel Total (ft/s)       *    4.46  * Avg. Vel. (ft/s)       *    0.59  *
5.33  *    1.00  *
* Max Chl Dpth (ft)      *   11.89  * Hydr. Depth (ft)       *    0.73  *
9.97  *    1.62  *
* Conv. Total (cfs)      *600265.6  * Conv. (cfs)            * 12428.7
*583898.6  *  3938.3  *
* Length Wtd. (ft)       *  578.01  * Wetted Per. (ft)       *  565.03  *
217.44  *   47.77  *
* Min Ch El (ft)         * 1303.66  * Shear (lb/sq ft)       *    0.02  *
0.23  *    0.04  *
* Alpha                  *    1.39  * Stream Power (lb/ft s) *    0.01  *
1.25  *    0.04  *
* Frctn Loss (ft)        *    0.21  * Cum Volume (acre-ft)   *   20.76  *
210.17  *    6.62  *
* C & E Loss (ft)        *    0.01  * Cum SA (acres)         *   25.65  *
21.42  *    4.60  *
*******************************************************************************
*****************

Note:    Multiple critical depths were found at this location.  The critical
depth with the lowest, valid,
         water surface was used.

CROSS SECTION


RIVER: EMF
REACH: Reach 4            RS: 14.191
```

```
INPUT
Description: All elevations adjusted up 2.12' for datum change.
Station Elevation Data    num=      59
     Sta    Elev     Sta    Elev     Sta    Elev     Sta    Elev     Sta
Elev
*****************************************************************************
**
 3430.03 1318.36 3445.46 1318.24 3704.18 1317.52 3730.05 1316.61 3738.54
1316.44
 3866.17 1316.26 3895.73 1316.25 3950.98 1316.22 4000.68 1316.04 4021.78
1315.99
 4045.25 1315.85  4092.6 1315.77 4135.18 1315.82 4194.79 1315.89 4304.97
1315.6
 4357.65 1315.46 4367.36 1316.79 4373.25 1316.62 4380.86 1316.69 4390.57
1316.31
 4396.55 1315.19 4409.58 1313.19 4425.32 1309.82 4443.88 1310.29 4462.94
1313.01
 4479.87 1315.82 4487.26 1316.32 4495.81 1317.12 4518.72 1317.02 4526.13
1314.11
 4535.61  1314.9 4542.14 1314.91 4565.02 1314.42 4621.05 1314.18 4648.88
1314.07
 4654.03 1314.11 4673.19    1314 4792.91 1313.92 4807.78 1313.98 4826.92
1314.2
  4832.6 1314.74 4848.48 1314.46 4862.28 1312.92 4874.59  1314.1  4890.8
1314.05
 4916.27 1305.34 4921.28 1303.73 4942.73 1303.42 4985.48 1303.41 5001.69
1303.32
 5070.94 1304.06  5076.1 1305.41 5098.91 1312.72 5103.47 1314.32 5117.06
1313.7
 5119.73 1313.36 5142.62 1313.71 5163.38 1318.52 5179.14 1318.61

Manning's n Values        num=       3
     Sta   n Val     Sta   n Val     Sta   n Val
***********************************************
 3430.03     .04  4890.8    .025 5103.47     .04

Bank Sta: Left   Right    Lengths: Left Channel   Right     Coeff Contr.
Expan.
        4890.8 5103.47          1011.04 1011.04 1011.04             .1
.3
Ineffective Flow     num=       1
   Sta L   Sta R    Elev  Permanent
 3430.03 4518.72 1318.12       F
Left Levee      Station=  4832.6      Elevation= 1314.74
Right Levee     Station= 5103.47      Elevation= 1314.32
Blocked Obstructions     num=       1
   Sta L   Sta R    Elev
************************
 4367.36    4495 1316.79

CROSS SECTION OUTPUT  Profile #Design
*****************************************************************************
*****************
* E.G. Elev (ft)          * 1312.47  * Element                 *  Left OB *
Channel * Right OB *
* Vel Head (ft)           *    0.33  * Wt. n-Val.              *          *
0.025  *          *
* W.S. Elev (ft)          * 1312.14  * Reach Len. (ft)         * 1011.04  *
1011.04  * 1011.04  *
* Crit W.S. (ft)          * 1307.52  * Flow Area (sq ft)       *          *
1498.29  *          *
* E.G. Slope (ft/ft)      *0.000419  * Area (sq ft)            *          *
1498.29  *          *
* Q Total (cfs)           * 6900.00  * Flow (cfs)              *          *
6900.00  *          *
* Top Width (ft)          *  200.70  * Top Width (ft)          *          *
```

```
200.70  *          *
* Vel Total (ft/s)       *    4.61  * Avg. Vel. (ft/s)       *          *
4.61  *          *
* Max Chl Dpth (ft)      *    8.82  * Hydr. Depth (ft)       *          *
7.47  *          *
* Conv. Total (cfs)      *337234.7  * Conv. (cfs)            *
*337234.7  *          *
* Length Wtd. (ft)       * 1011.04  * Wetted Per. (ft)       *          *
203.32  *          *
* Min Ch El (ft)         * 1303.32  * Shear (lb/sq ft)       *          *
0.19  *          *
* Alpha                  *    1.00  * Stream Power (lb/ft s) *          *
0.89  *          *
* Frctn Loss (ft)        *    0.45  * Cum Volume (acre-ft)   *          *
122.53  *          *
* C & E Loss (ft)        *    0.00  * Cum SA (acres)         *          *
17.53  *          *
*******************************************************************************
*****************

Note:    Multiple critical depths were found at this location.  The critical
depth with the lowest, valid,
         water surface was used.

CROSS SECTION OUTPUT  Profile #PF 5
*******************************************************************************
*****************
* E.G. Elev (ft)         * 1315.76  * Element                *  Left OB *
Channel * Right OB *
* Vel Head (ft)          *    0.41  * Wt. n-Val.             *   0.040  *
0.025  *   0.040  *
* W.S. Elev (ft)         * 1315.36  * Reach Len. (ft)        * 1011.04  *
1011.04  * 1011.04  *
* Crit W.S. (ft)         * 1309.13  * Flow Area (sq ft)      *  449.03  *
2170.26  *   70.65  *
* E.G. Slope (ft/ft)     *0.000354  * Area (sq ft)           *  449.03  *
2170.26  *   70.65  *
* Q Total (cfs)          *11730.00  * Flow (cfs)             *  358.33
*11306.37  *   65.30  *
* Top Width (ft)         *  626.76  * Top Width (ft)         *  367.84  *
212.67  *   46.25  *
* Vel Total (ft/s)       *    4.36  * Avg. Vel. (ft/s)       *    0.80  *
5.21  *    0.92  *
* Max Chl Dpth (ft)      *   12.03  * Hydr. Depth (ft)       *    1.22  *
10.20  *    1.53  *
* Conv. Total (cfs)      *623195.4  * Conv. (cfs)            * 19037.4
*600688.6  *  3469.4  *
* Length Wtd. (ft)       * 1011.04  * Wetted Per. (ft)       *  368.29  *
215.97  *   46.48  *
* Min Ch El (ft)         * 1303.32  * Shear (lb/sq ft)       *    0.03  *
0.22  *    0.03  *
* Alpha                  *    1.38  * Stream Power (lb/ft s) *    0.02  *
1.16  *    0.03  *
* Frctn Loss (ft)        *    0.37  * Cum Volume (acre-ft)   *   12.45  *
181.91  *    5.73  *
* C & E Loss (ft)        *    0.00  * Cum SA (acres)         *   16.66  *
18.62  *    4.03  *
*******************************************************************************
*****************

Note:    Multiple critical depths were found at this location.  The critical
depth with the lowest, valid,
         water surface was used.

CROSS SECTION
```

```
RIVER: EMF
REACH: Reach 4            RS: 14

INPUT
Description: Ineffective Flow Area Upstream of Higley Road Bridge. All
             elevations adjusted up 2.12' for datum change.
Station Elevation Data    num=      38
     Sta    Elev     Sta    Elev     Sta    Elev     Sta    Elev     Sta
Elev
*****************************************************************************
**
  4030.6 1316.82 4039.42 1315.57 4103.08 1314.92 4117.51 1314.92 4237.57
1314.75
 4267.03 1314.72 4372.08 1314.54 4416.57 1314.42 4506.59 1314.38 4566.09
1314.29
 4641.08 1314.23 4676.38 1314.27 4715.62 1314.22 4775.59 1313.97 4824.41
1313.72
 4830.23 1314.16 4847.44 1313.76 4850.16 1314.52 4853.82 1313.65 4864.27
1312.74
 4889.58 1313.52 4919.85 1304.35 4926.48 1304.12 4959.63 1303.39 4994.21
1303.24
  5008.4 1303.02 5030.42 1303.15 5044.23 1303.32 5072.31 1303.38 5103.68
1313.9
 5117.88 1313.57 5120.37  1312.6 5126.51 1314.32 5143.86 1314.72 5149.85
1315.02
 5159.64 1316.99 5170.27  1317.3  5180.2 1317.72

Manning's n Values        num=       3
     Sta   n Val     Sta   n Val     Sta   n Val
***********************************************
  4030.6     .04 4889.58    .025 5103.68     .04

Bank Sta: Left   Right    Lengths: Left Channel   Right     Coeff Contr.
Expan.
       4889.58 5103.68            356.5  171.04    46.5             .3
.5
Ineffective Flow     num=       1
   Sta L   Sta R    Elev  Permanent
  4030.6    4520 1318.12        F
Left Levee      Station= 4850.16      Elevation= 1314.52
Right Levee     Station= 5103.68      Elevation=  1313.9

CROSS SECTION OUTPUT  Profile #Design
*****************************************************************************
*****************
* E.G. Elev (ft)         * 1312.02  * Element                 *  Left OB *
Channel * Right OB *
* Vel Head (ft)          *    0.35  * Wt. n-Val.              *          *
0.025  *          *
* W.S. Elev (ft)         * 1311.67  * Reach Len. (ft)         *  356.50  *
171.04  *   46.50  *
* Crit W.S. (ft)         * 1307.32  * Flow Area (sq ft)       *          *
1451.30  *          *
* E.G. Slope (ft/ft)     *0.000467  * Area (sq ft)            *          *
1451.30  *          *
* Q Total (cfs)          * 6900.00  * Flow (cfs)              *          *
6900.00  *          *
* Top Width (ft)         *  201.33  * Top Width (ft)          *          *
201.33  *          *
* Vel Total (ft/s)       *    4.75  * Avg. Vel. (ft/s)        *          *
4.75  *          *
* Max Chl Dpth (ft)      *    8.65  * Hydr. Depth (ft)        *          *
7.21  *          *
* Conv. Total (cfs)      *319308.9  * Conv. (cfs)             *
*319308.9  *          *
```

Adjusted_Prop_for_datum

* Length Wtd. (ft)	* 171.04	* Wetted Per. (ft)	*	* 203.78	*
* Min Ch El (ft)	* 1303.02	* Shear (lb/sq ft)	*	* 0.21	*
* Alpha	* 1.00	* Stream Power (lb/ft s)	*	* 0.99	*
* Frctn Loss (ft)	* 0.10	* Cum Volume (acre-ft)	*	* 88.30	*
* C & E Loss (ft)	* 0.01	* Cum SA (acres)	*	* 12.86	*

****

Note: Multiple critical depths were found at this location. The critical depth with the lowest, valid, water surface was used.

CROSS SECTION OUTPUT Profile #PF 5

****

* E.G. Elev (ft)	* 1315.39	* Element	* Left OB	* Channel	* Right OB	*
* Vel Head (ft)	* 0.44	* Wt. n-Val.	* 0.040	* 0.025	* 0.040	*
* W.S. Elev (ft)	* 1314.95	* Reach Len. (ft)	* 356.50	* 171.04	* 46.50	*
* Crit W.S. (ft)	* 1308.92	* Flow Area (sq ft)	* 329.92	* 2140.48	* 38.92	*
* E.G. Slope (ft/ft)	*0.000385	* Area (sq ft)	* 461.30	* 2140.48	* 38.92	*
* Q Total (cfs)	*11730.00	* Flow (cfs)	* 222.96	*11481.32	* 25.71	*
* Top Width (ft)	* 1048.01	* Top Width (ft)	* 789.19	* 214.10	* 44.72	*
* Vel Total (ft/s)	* 4.67	* Avg. Vel. (ft/s)	* 0.68	* 5.36	* 0.66	*
* Max Chl Dpth (ft)	* 11.93	* Hydr. Depth (ft)	* 0.89	* 10.00	* 0.87	*
* Conv. Total (cfs)	*597475.1	* Conv. (cfs)	* 11356.9	*584808.6	* 1309.6	*
* Length Wtd. (ft)	* 172.67	* Wetted Per. (ft)	* 369.86	* 217.19	* 45.15	*
* Min Ch El (ft)	* 1303.02	* Shear (lb/sq ft)	* 0.02	* 0.24	* 0.02	*
* Alpha	* 1.29	* Stream Power (lb/ft s)	* 0.01	* 1.27	* 0.01	*
* Frctn Loss (ft)	* 0.09	* Cum Volume (acre-ft)	* 1.89	* 131.88	* 4.46	*
* C & E Loss (ft)	* 0.01	* Cum SA (acres)	* 3.23	* 13.67	* 2.98	*

****

Note: Multiple critical depths were found at this location. The critical depth with the lowest, valid, water surface was used.

CROSS SECTION

RIVER: EMF
REACH: Reach 4 RS: 13.968

INPUT
Description: Higley Road Bridge (Upstream Face). All elevations adjusted up 2.12' for datum change.

```
6 Span Bridge with Riprap
              Protection
Manning n Value of .030 used for Channel
Use Field
              Survey Data for This Cross Section
Skew Angle 41.63 Degrees,
              Cross Section Data Adjusted
Station Elevation Data    num=      22
     Sta    Elev     Sta    Elev     Sta    Elev     Sta    Elev     Sta
Elev
*****************************************************************************
**
 4807.89 1317.74 4840.55 1317.64 4854.42  1317.6 4855.03 1313.15 4867.07
1312.16
 4898.11 1312.16 4901.46  1309.5 4917.23 1304.74 4948.05 1303.68 4994.94
1303.72
 5012.22 1302.61 5024.43 1301.89 5030.47 1302.14 5042.29 1303.87 5071.67
1304.58
  5089.7 1308.79 5097.72 1311.39 5123.85 1312.15 5130.25 1313.61  5133.9
1314.63
 5135.84 1317.46 5165.08  1317.3

Manning's n Values        num=       3
     Sta   n Val     Sta   n Val     Sta   n Val
***********************************************
 4807.89     .04 4854.42     .03 5135.84     .04

Bank Sta: Left   Right    Lengths: Left Channel   Right     Coeff Contr.
Expan.
       4854.42 5135.84           147.84  147.84  147.84             .3
.5
Left Levee      Station= 4854.42      Elevation=  1317.6
Right Levee     Station= 5135.84      Elevation= 1317.46

CROSS SECTION OUTPUT  Profile #Design
*****************************************************************************
*****************
* E.G. Elev (ft)          * 1311.91  * Element                 *  Left OB *
Channel * Right OB *
* Vel Head (ft)           *    0.38  * Wt. n-Val.              *          *
0.030  *          *
* W.S. Elev (ft)          * 1311.53  * Reach Len. (ft)         *    2.00  *
2.00  *    2.00  *
* Crit W.S. (ft)          * 1307.55  * Flow Area (sq ft)       *          *
1394.26  *          *
* E.G. Slope (ft/ft)      *0.000780  * Area (sq ft)            *          *
1394.26  *          *
* Q Total (cfs)           * 6900.00  * Flow (cfs)              *          *
6900.00  *          *
* Top Width (ft)          *  203.53  * Top Width (ft)          *          *
203.53  *          *
* Vel Total (ft/s)        *    4.95  * Avg. Vel. (ft/s)        *          *
4.95  *          *
* Max Chl Dpth (ft)       *    9.64  * Hydr. Depth (ft)        *          *
6.85  *          *
* Conv. Total (cfs)       *247058.1  * Conv. (cfs)             *
*247058.1  *          *
* Length Wtd. (ft)        *    2.00  * Wetted Per. (ft)        *          *
206.05  *          *
* Min Ch El (ft)          * 1301.89  * Shear (lb/sq ft)        *          *
0.33  *          *
* Alpha                   *    1.00  * Stream Power (lb/ft s)  *          *
1.63  *          *
* Frctn Loss (ft)         *    0.00  * Cum Volume (acre-ft)    *          *
82.71  *          *
* C & E Loss (ft)         *    0.01  * Cum SA (acres)          *          *
```

```
12.06  *          *
*****************************************************************************
*****************

Note:    Multiple critical depths were found at this location.  The critical
depth with the lowest, valid,
         energy was used.

CROSS SECTION OUTPUT  Profile #PF 5
*****************************************************************************
*****************
* E.G. Elev (ft)          * 1315.29  * Element                 *  Left OB *
Channel * Right OB *
* Vel Head (ft)           *    0.41  * Wt. n-Val.              *          *
0.030  *          *
* W.S. Elev (ft)          * 1314.87  * Reach Len. (ft)         *    2.00  *
2.00  *    2.00  *
* Crit W.S. (ft)          * 1309.14  * Flow Area (sq ft)       *          *
2269.12  *          *
* E.G. Slope (ft/ft)      *0.000682  * Area (sq ft)            *          *
2269.12  *          *
* Q Total (cfs)           *11730.00  * Flow (cfs)              *
*11730.00  *          *
* Top Width (ft)          *  279.27  * Top Width (ft)          *          *
279.27  *          *
* Vel Total (ft/s)        *    5.17  * Avg. Vel. (ft/s)        *          *
5.17  *          *
* Max Chl Dpth (ft)       *   12.98  * Hydr. Depth (ft)        *          *
8.13  *          *
* Conv. Total (cfs)       *449187.2  * Conv. (cfs)             *
*449187.2  *          *
* Length Wtd. (ft)        *    2.00  * Wetted Per. (ft)        *          *
284.00  *          *
* Min Ch El (ft)          * 1301.89  * Shear (lb/sq ft)        *          *
0.34  *          *
* Alpha                   *    1.00  * Stream Power (lb/ft s)  *          *
1.76  *          *
* Frctn Loss (ft)         *    0.00  * Cum Volume (acre-ft)    *          *
123.22  *    4.44  *
* C & E Loss (ft)         *    0.03  * Cum SA (acres)          *          *
12.70  *    2.96  *
*****************************************************************************
*****************

Warning: The conveyance ratio (upstream conveyance divided by downstream
conveyance) is less than
         0.7 or greater than 1.4.  This may indicate the need for additional
cross sections.
Note:    Multiple critical depths were found at this location.  The critical
depth with the lowest, valid,
         energy was used.

BRIDGE


RIVER: EMF
REACH: Reach 4            RS: 13.954

INPUT
Description: Higley Road 6-Span Bridge
Use Field Survey Data for this Cross
             Section
Elongated Piers With Semi-Circular Ends
Distance from Upstream XS =       2
Deck/Roadway Width        =     144
Weir Coefficient          =     2.6
```

Upstream Deck/Roadway Coordinates
num= 18

Sta	Hi Cord	Lo Cord	Sta	Hi Cord	Lo Cord	Sta	Hi Cord	Lo Cord
4807.89	1317.62	1316.64	4855.03	1317.95	1312.45	4855.77	1317.95	1314.11
4861.52	1317.99	1314.11	4899.6	1318.15	1314.32	4901.04	1318.19	1314.33
4936.41	1318.37	1314.41	4948.05	1318.4	1314.44	4974.83	1318.46	1314.49
4995.15	1318.43	1314.44	5012.49	1318.42	1314.43	5042.39	1318.37	1314.11
5050.76	1318.35	1314.13	5088.54	1318.2	1314.17	5088.74	1318.2	1314.17
5127.12	1317.96	1313.97	5135.84	1317.87	1314.14	5165.36	1317.53	1315.64

Upstream Bridge Cross Section Data
Station Elevation Data num= 22

Sta	Elev	Sta	Elev	Sta	Elev	Sta	Elev	Sta	Elev
4807.89	1317.74	4840.55	1317.64	4854.42	1317.6	4855.03	1313.15	4867.07	1312.16
4898.11	1312.16	4901.46	1309.5	4917.23	1304.74	4948.05	1303.68	4994.94	1303.72
5012.22	1302.61	5024.43	1301.89	5030.47	1302.14	5042.29	1303.87	5071.67	1304.58
5089.7	1308.79	5097.72	1311.39	5123.85	1312.15	5130.25	1313.61	5133.9	1314.63
5135.84	1317.46	5165.08	1317.3						

Manning's n Values num= 3

Sta	n Val	Sta	n Val	Sta	n Val
4807.89	.04	4854.42	.03	5135.84	.04

Bank Sta: Left	Right	Coeff Contr.	Expan.
4854.42	5135.84	.3	.5

Left Levee Station= 4854.42 Elevation= 1317.6
Right Levee Station= 5135.84 Elevation= 1317.46

Downstream Deck/Roadway Coordinates
num= 19

Sta	Hi Cord	Lo Cord	Sta	Hi Cord	Lo Cord	Sta	Hi Cord	Lo Cord
4814.7	1317.65	1315.64	4861.52	1317.99	1313.64	4864.8	1318	1314.11
4899.6	1318.15	1314.07	4903.76	1318.17	1314.06	4936.41	1318.37	1314.18
4950.55	1318.41	1314.26	4974.83	1318.46	1314.35	4997.42	1318.43	1314.44
5012.49	1318.42	1314.39	5044.21	1318.36	1314.31	5050.76	1318.35	1314.3
5088.74	1318.2	1314.25	5090.93	1318.18	1314.24	5127.12	1317.96	1314.27
5135.98	1317.87	1314.28	5136.06	1317.87	1313.11	5165.36	1317.53	1314.64
5171.86	1317.42	1316.64						

Downstream Bridge Cross Section Data
Station Elevation Data num= 21

Sta	Elev	Sta	Elev	Sta	Elev	Sta	Elev	Sta	Elev
4814.7	1317.6	4855.13	1317.63	4857.13	1317.61	4870.98	1312.88	4892.66	1311.5
4901.97	1309.5	4920.34	1304.46	4948.7	1303.69	4995.86	1304.36	5004.41	1303.22
5016.54	1302.29	5027.69	1303.04	5043.04	1304.23	5068.4	1303.86	5089.23	1309.68
5098	1312.01	5126.96	1313.22	5131.94	1314.32	5136.06	1314.11	5136.2	1317.82
5171.86	1317.8								

Manning's n Values num= 3

```
                                Adjusted_Prop_for_datum
     Sta   n Val      Sta   n Val      Sta   n Val
*********************************************
  4814.7     .04 4857.13     .03  5136.2     .04

Bank Sta: Left   Right    Coeff Contr.   Expan.
       4857.13  5136.2              .3       .5
Left Levee       Station= 4857.13      Elevation= 1317.61
Right Levee      Station=  5136.2      Elevation= 1317.82

Upstream Embankment side slope              =       0 horiz. to 1.0 vertical
Downstream Embankment side slope            =       0 horiz. to 1.0 vertical
Maximum allowable submergence for weir flow =     .95
Elevation at which weir flow begins         =
Energy head used in spillway design         =
Spillway height used in design              =
Weir crest shape                            = Broad Crested

Number of Piers =  5

Pier Data
Pier Station     Upstream= 4901.04    Downstream= 4903.76
Upstream     num=       2
    Width   Elev    Width   Elev
*********************************
       2  1308.5       2 1315.12
Downstream     num=       2
    Width   Elev    Width   Elev
*********************************
       2 1308.68       2 1315.12

Pier Data
Pier Station     Upstream= 4948.05    Downstream= 4950.55
Upstream     num=       2
    Width   Elev    Width   Elev
*********************************
       2 1302.68       2 1315.12
Downstream     num=       2
    Width   Elev    Width   Elev
*********************************
       2 1303.23       2 1315.12

Pier Data
Pier Station     Upstream= 4995.15    Downstream= 4997.42
Upstream     num=       2
    Width   Elev    Width   Elev
*********************************
       2 1302.72       2 1315.12
Downstream     num=       2
    Width   Elev    Width   Elev
*********************************
       2 1303.36       2 1315.12

Pier Data
Pier Station     Upstream= 5042.39    Downstream= 5044.21
Upstream     num=       2
    Width   Elev    Width   Elev
*********************************
       2 1302.87       2 1315.12
Downstream     num=       2
    Width   Elev    Width   Elev
*********************************
       2 1302.69       2 1315.12

Pier Data
Pier Station     Upstream= 5088.54    Downstream= 5090.93
Upstream     num=       2
```

```
                                Adjusted_Prop_for_datum
    Width   Elev    Width   Elev
*******************************
       2 1307.79       2 1315.12
Downstream     num=        2
    Width   Elev    Width   Elev
*******************************
       2  1308.5       2 1315.12

Number of Bridge Coefficient Sets =  1

Low Flow Methods and Data
       Energy
       Momentum                Cd    =    1.33
       Yarnell                 KVal =      .9
Selected Low Flow Methods = Highest Energy Answer

High Flow Method
       Energy Only

Additional Bridge Parameters
       Add Friction component to Momentum
       Do not add Weight component to Momentum
       Class B flow critical depth computations use critical depth
           inside the bridge at the upstream end
       Criteria to check for pressure flow = Upstream energy grade line

BRIDGE OUTPUT  Profile #Design
*******************************************************************************
***************
* E.G. US. (ft)          *    1311.91  * Element                 *Inside BR US
*Inside BR DS *
* W.S. US. (ft)          *    1311.53  * E.G. Elev (ft)          *    1311.89
*    1311.68  *
* Q Total (cfs)          *    6900.00  * W.S. Elev (ft)          *    1311.48
*    1311.19  *
* Q Bridge (cfs)         *    6900.00  * Crit W.S. (ft)          *    1307.65
*    1307.86  *
* Q Weir (cfs)           *             * Max Chl Dpth (ft)       *       9.58
*       8.90  *
* Weir Sta Lft (ft)      *             * Vel Total (ft/s)        *       5.20
*       5.61  *
* Weir Sta Rgt (ft)      *             * Flow Area (sq ft)       *    1328.16
*    1229.17  *
* Weir Submerg           *             * Froude # Chl            *       0.35
*       0.39  *
* Weir Max Depth (ft)    *             * Specif Force (cu ft)    *    6136.22
*    5557.39  *
* Min El Weir Flow (ft)  *    1317.66  * Hydr Depth (ft)         *       6.93
*       6.44  *
* Min El Prs (ft)        *    1314.49  * W.P. Total (ft)         *     249.04
*     242.24  *
* Delta EG (ft)          *       0.25  * Conv. Total (cfs)       *   200804.9
*   179777.1  *
* Delta WS (ft)          *       0.32  * Top Width (ft)          *     191.66
*     190.85  *
* BR Open Area (sq ft)   *    1923.13  * Frctn Loss (ft)         *       0.19
*       0.00  *
* BR Open Vel (ft/s)     *       5.61  * C & E Loss (ft)         *       0.02
*       0.02  *
* Coef of Q              *             * Shear Total (lb/sq ft)  *       0.39
*       0.47  *
* Br Sel Method          *Energy only  * Power Total (lb/ft s)   *       2.04
*       2.62  *
*******************************************************************************
***************
```

Warning: The Yarnell method gave an invalid answer. The upstream energy was less than the
downstream energy. The program defaulted to the next valid (user selected) method. If the
Yarnell method was the only one selected, the program will default to an energy based solution.
Warning: For the final momentum answer at the bridge, the upstream energy was computed lower than
the downstream energy. This is not physically possible, the momentum answer has been
disregarded.

BRIDGE OUTPUT Profile #PF 5

E.G. US. (ft)	1315.29	Element	Inside BR US
W.S. US. (ft)	1314.87	E.G. Elev (ft)	1315.25
Q Total (cfs)	11730.00	W.S. Elev (ft)	1314.73
Q Bridge (cfs)	11730.00	Crit W.S. (ft)	1309.25
Q Weir (cfs)		Max Chl Dpth (ft)	12.84
Weir Sta Lft (ft)		Vel Total (ft/s)	5.82
Weir Sta Rgt (ft)		Flow Area (sq ft)	2016.46
Weir Submerg		Froude # Chl	0.36
Weir Max Depth (ft)		Specif Force (cu ft)	12685.56
Min El Weir Flow (ft)	1317.66	Hydr Depth (ft)	
Min El Prs (ft)	1314.49	W.P. Total (ft)	619.86
Delta EG (ft)	0.46	Conv. Total (cfs)	219279.5
Delta WS (ft)	0.57	Top Width (ft)	
BR Open Area (sq ft)	1923.13	Frctn Loss (ft)	0.38
BR Open Vel (ft/s)	6.13	C & E Loss (ft)	0.02
Coef of Q		Shear Total (lb/sq ft)	0.58
Br Sel Method	Energy only	Power Total (lb/ft s)	3.38

Warning: The Yarnell method gave an invalid answer. The upstream energy was less than the
downstream energy. The program defaulted to the next valid (user selected) method. If the
Yarnell method was the only one selected, the program will default to an energy based solution.
Warning: The conveyance ratio (upstream conveyance divided by downstream conveyance) is less than
0.7 or greater than 1.4. This may indicate the need for additional cross sections.

CROSS SECTION

```
RIVER: EMF
REACH: Reach 4            RS: 13.940

INPUT
Description: Higley Road Bridge (Downstream Face). All elevations adjusted up
             2.12' for datum change.
6 Span Bridge with Riprap
             Protection
Manning n Value of .030 used for Channel
Use Field
             Survey Data for This Cross Section
Skew Angle 41.71 Degrees,
             Cross Section Data Adjusted
Station Elevation Data    num=      21
     Sta    Elev     Sta    Elev     Sta    Elev     Sta    Elev     Sta
Elev
*******************************************************************************
**
  4814.7  1317.6 4855.13 1317.63 4857.13 1317.61 4870.98 1312.88 4892.66
1311.5
 4901.97  1309.5 4920.34 1304.46  4948.7 1303.69 4995.86 1304.36 5004.41
1303.22
 5016.54 1302.29 5027.69 1303.04 5043.04 1304.23  5068.4 1303.86 5089.23
1309.68
    5098 1312.01 5126.96 1313.22 5131.94 1314.32 5136.06 1314.11  5136.2
1317.82
 5171.86  1317.8

Manning's n Values        num=       3
     Sta   n Val     Sta   n Val     Sta   n Val
*********************************************
  4814.7     .04 4857.13     .03  5136.2     .04

Bank Sta: Left   Right    Lengths: Left Channel   Right     Coeff Contr.
Expan.
       4857.13  5136.2               35  150.77   286.5             .3
.5
Left Levee      Station= 4857.13      Elevation= 1317.61
Right Levee     Station=  5136.2      Elevation= 1317.82

CROSS SECTION OUTPUT  Profile #Design
*******************************************************************************
*****************
* E.G. Elev (ft)          * 1311.66  * Element                 *  Left OB *
Channel * Right OB *
* Vel Head (ft)           *    0.45  * Wt. n-Val.              *          *
0.030  *          *
* W.S. Elev (ft)          * 1311.21  * Reach Len. (ft)         *   35.00  *
150.77  *  286.50  *
* Crit W.S. (ft)          * 1307.73  * Flow Area (sq ft)       *          *
1282.09  *          *
* E.G. Slope (ft/ft)      *0.001012  * Area (sq ft)            *          *
1282.09  *          *
* Q Total (cfs)           * 6900.00  * Flow (cfs)              *          *
6900.00  *          *
* Top Width (ft)          *  200.99  * Top Width (ft)          *          *
200.99  *          *
* Vel Total (ft/s)        *    5.38  * Avg. Vel. (ft/s)        *          *
5.38  *          *
* Max Chl Dpth (ft)       *    8.92  * Hydr. Depth (ft)        *          *
6.38  *          *
* Conv. Total (cfs)       *216940.6  * Conv. (cfs)             *
*216940.6  *          *
* Length Wtd. (ft)        *  150.77  * Wetted Per. (ft)        *          *
203.05  *          *
* Min Ch El (ft)          * 1302.29  * Shear (lb/sq ft)        *          *
```

```
0.40  *          *
* Alpha                    *    1.00  * Stream Power (lb/ft s) *          *
2.15  *          *
* Frctn Loss (ft)          *    0.11  * Cum Volume (acre-ft)   *          *
78.37  *          *
* C & E Loss (ft)          *    0.03  * Cum SA (acres)         *          *
11.42  *          *
*************************************************************************
*****************
```

Note: Multiple critical depths were found at this location. The critical depth with the lowest, valid,
energy was used.

CROSS SECTION OUTPUT Profile #PF 5

```
*************************************************************************
*****************
* E.G. Elev (ft)           * 1314.83  * Element                 *  Left OB *
Channel * Right OB *
* Vel Head (ft)            *    0.53  * Wt. n-Val.              *          *
0.030  *          *
* W.S. Elev (ft)           * 1314.30  * Reach Len. (ft)         *   35.00  *
150.77  *  286.50  *
* Crit W.S. (ft)           * 1309.38  * Flow Area (sq ft)       *          *
2015.16  *          *
* E.G. Slope (ft/ft)       *0.000954  * Area (sq ft)            *          *
2015.16  *          *
* Q Total (cfs)            *11730.00  * Flow (cfs)              *
*11730.00  *          *
* Top Width (ft)           *  268.73  * Top Width (ft)          *          *
268.73  *          *
* Vel Total (ft/s)         *    5.82  * Avg. Vel. (ft/s)        *          *
5.82  *          *
* Max Chl Dpth (ft)        *   12.01  * Hydr. Depth (ft)        *          *
7.50  *          *
* Conv. Total (cfs)        *379750.8  * Conv. (cfs)             *
*379750.8  *          *
* Length Wtd. (ft)         *  151.19  * Wetted Per. (ft)        *          *
271.54  *          *
* Min Ch El (ft)           * 1302.29  * Shear (lb/sq ft)        *          *
0.44  *          *
* Alpha                    *    1.00  * Stream Power (lb/ft s) *          *
2.57  *          *
* Frctn Loss (ft)          *    0.10  * Cum Volume (acre-ft)   *          *
116.54  *    4.44  *
* C & E Loss (ft)          *    0.01  * Cum SA (acres)         *          *
12.49  *    2.96  *
*************************************************************************
*****************
```

Warning: Divided flow computed for this cross-section.
Note: Multiple critical depths were found at this location. The critical depth with the lowest, valid,
energy was used.

CROSS SECTION

RIVER: EMF
REACH: Reach 4 RS: 13.911

INPUT
Description: All elevations adjusted up 2.12' for datum change.
Station Elevation Data num= 16

Sta	Elev	Sta	Elev	Sta	Elev	Sta	Elev	Sta	Elev

Adjusted_Prop_for_datum

```
**********************************************************************
**
 4841.43 1317.22 4853.38  1316.5 4870.61 1317.18 4880.66 1316.67 4906.08
1308.62
 4920.61 1303.72 4938.27 1303.31 5001.12    1303 5069.78 1303.67 5074.56
1303.7
 5104.87 1313.32 5116.39 1313.25 5120.37 1312.13  5142.7 1312.39 5166.32
1316.56
 5181.39 1316.92

Manning's n Values        num=       3
     Sta   n Val     Sta   n Val     Sta   n Val
*********************************************
 4841.43     .04 4870.61    .025 5104.87     .04

Bank Sta: Left   Right    Lengths: Left Channel   Right     Coeff Contr.
Expan.
       4870.61 5104.87              275  368.56     380             .3
.5
Left Levee      Station= 4870.61      Elevation= 1317.18
Right Levee     Station= 5104.87      Elevation= 1313.32

CROSS SECTION OUTPUT  Profile #Design
**************************************************************************
*****************
* E.G. Elev (ft)          * 1311.52  * Element                 *  Left OB *
Channel * Right OB *
* Vel Head (ft)           *    0.39  * Wt. n-Val.              *          *
0.025  *          *
* W.S. Elev (ft)          * 1311.13  * Reach Len. (ft)         *  275.00  *
368.56  *  380.00  *
* Crit W.S. (ft)          * 1307.20  * Flow Area (sq ft)       *          *
1375.51  *          *
* E.G. Slope (ft/ft)      *0.000552  * Area (sq ft)            *          *
1375.51  *          *
* Q Total (cfs)           * 6900.00  * Flow (cfs)              *          *
6900.00  *          *
* Top Width (ft)          *  199.82  * Top Width (ft)          *          *
199.82  *          *
* Vel Total (ft/s)        *    5.02  * Avg. Vel. (ft/s)        *          *
5.02  *          *
* Max Chl Dpth (ft)       *    8.13  * Hydr. Depth (ft)        *          *
6.88  *          *
* Conv. Total (cfs)       *293552.2  * Conv. (cfs)             *
*293552.2  *          *
* Length Wtd. (ft)        *  368.56  * Wetted Per. (ft)        *          *
202.17  *          *
* Min Ch El (ft)          * 1303.00  * Shear (lb/sq ft)        *          *
0.23  *          *
* Alpha                   *    1.00  * Stream Power (lb/ft s) *          *
1.18  *          *
* Frctn Loss (ft)         *    0.22  * Cum Volume (acre-ft)   *          *
73.77  *          *
* C & E Loss (ft)         *    0.01  * Cum SA (acres)         *          *
10.72  *          *
**************************************************************************
*****************

Note:    Multiple critical depths were found at this location.  The critical
depth with the lowest, valid,
         water surface was used.

CROSS SECTION OUTPUT  Profile #PF 5
**************************************************************************
*****************
* E.G. Elev (ft)          * 1314.72  * Element                 *  Left OB *
```

```
Channel * Right OB *
* Vel Head (ft)          *    0.51  * Wt. n-Val.            *          *
0.025  *   0.040  *
* W.S. Elev (ft)         * 1314.20  * Reach Len. (ft)       *  275.00  *
368.56  *  380.00  *
* Crit W.S. (ft)         * 1308.79  * Flow Area (sq ft)     *          *
2018.34  *   69.35  *
* E.G. Slope (ft/ft)     *0.000490  * Area (sq ft)          *          *
2018.34  *   69.35  *
* Q Total (cfs)          *11730.00  * Flow (cfs)            *
*11657.50  *   72.50  *
* Top Width (ft)         *  264.53  * Top Width (ft)        *          *
216.42  *   48.11  *
* Vel Total (ft/s)       *    5.62  * Avg. Vel. (ft/s)      *          *
5.78  *    1.05  *
* Max Chl Dpth (ft)      *   11.20  * Hydr. Depth (ft)      *          *
9.33  *    1.44  *
* Conv. Total (cfs)      *529660.8  * Conv. (cfs)           *
*526387.3  *  3273.5  *
* Length Wtd. (ft)       *  368.62  * Wetted Per. (ft)      *          *
219.59  *   48.42  *
* Min Ch El (ft)         * 1303.00  * Shear (lb/sq ft)      *          *
0.28  *    0.04  *
* Alpha                  *    1.05  * Stream Power (lb/ft s) *          *
1.63  *    0.05  *
* Frctn Loss (ft)        *    0.19  * Cum Volume (acre-ft)  *          *
109.56  *    4.21  *
* C & E Loss (ft)        *    0.01  * Cum SA (acres)        *          *
11.65  *    2.80  *
*****************************************************************************
*****************
```

Note: Multiple critical depths were found at this location. The critical depth with the lowest, valid,
water surface was used.

CROSS SECTION

RIVER: EMF
REACH: Reach 4 RS: 13.842

INPUT
Description: All elevations adjusted up 2.12' for datum change.
Station Elevation Data num= 26

```
     Sta    Elev     Sta    Elev     Sta    Elev     Sta    Elev     Sta
Elev
*****************************************************************************
**
 4551.05 1321.02 4564.55 1317.24 4611.63 1316.91 4621.86 1316.94 4639.67
1316.83
 4689.87 1316.32 4745.86 1315.89 4829.57 1315.79 4836.88 1315.73 4842.99
1317.83
 4850.21 1315.22 4866.43 1315.39 4870.85 1316.57 4878.98 1316.86 4884.46
1316.85
 4926.45 1303.82 4999.22 1303.11 5003.91 1303.01 5042.99 1303.26 5079.17
1303.53
 5109.48 1313.22 5122.04 1313.39 5126.64 1312.76 5153.02 1312.69 5174.09
1316.82
 5189.06 1316.92
```

Manning's n Values num= 3

```
     Sta   n Val     Sta   n Val     Sta   n Val
*************************************************
 4551.05     .04 4884.46    .025 5109.48     .04
```

```
                                Adjusted_Prop_for_datum
Bank Sta: Left   Right    Lengths: Left Channel   Right     Coeff Contr.
Expan.
       4884.46 5109.48              350  455.16     480             .1
.3
Left Levee      Station= 4842.99      Elevation= 1317.83
Right Levee     Station= 5122.04      Elevation= 1313.39

CROSS SECTION OUTPUT  Profile #Design
*******************************************************************************
*****************
* E.G. Elev (ft)          * 1311.29  * Element                 *  Left OB *
Channel * Right OB *
* Vel Head (ft)           *    0.43  * Wt. n-Val.              *          *
0.025  *          *
* W.S. Elev (ft)          * 1310.86  * Reach Len. (ft)         *  350.00  *
455.16  *  480.00  *
* Crit W.S. (ft)          * 1307.26  * Flow Area (sq ft)       *          *
1310.41  *          *
* E.G. Slope (ft/ft)      *0.000642  * Area (sq ft)            *          *
1310.41  *          *
* Q Total (cfs)           * 6900.00  * Flow (cfs)              *          *
6900.00  *          *
* Top Width (ft)          *  198.33  * Top Width (ft)          *          *
198.33  *          *
* Vel Total (ft/s)        *    5.27  * Avg. Vel. (ft/s)        *          *
5.27  *          *
* Max Chl Dpth (ft)       *    7.85  * Hydr. Depth (ft)        *          *
6.61  *          *
* Conv. Total (cfs)       *272223.3  * Conv. (cfs)             *
*272223.3  *          *
* Length Wtd. (ft)        *  455.16  * Wetted Per. (ft)        *          *
200.55  *          *
* Min Ch El (ft)          * 1303.01  * Shear (lb/sq ft)        *          *
0.26  *          *
* Alpha                   *    1.00  * Stream Power (lb/ft s)  *          *
1.38  *          *
* Frctn Loss (ft)         *    0.28  * Cum Volume (acre-ft)    *          *
62.41  *          *
* C & E Loss (ft)         *    0.01  * Cum SA (acres)          *          *
9.04  *          *
*******************************************************************************
*****************

Note:    Multiple critical depths were found at this location.  The critical
depth with the lowest, valid,
         water surface was used.

CROSS SECTION OUTPUT  Profile #PF 5
*******************************************************************************
*****************
* E.G. Elev (ft)          * 1314.52  * Element                 *  Left OB *
Channel * Right OB *
* Vel Head (ft)           *    0.55  * Wt. n-Val.              *          *
0.025  *   0.040  *
* W.S. Elev (ft)          * 1313.97  * Reach Len. (ft)         *  350.00  *
455.16  *  480.00  *
* Crit W.S. (ft)          * 1308.87  * Flow Area (sq ft)       *          *
1956.20  *   49.25  *
* E.G. Slope (ft/ft)      *0.000544  * Area (sq ft)            *          *
1956.20  *   49.25  *
* Q Total (cfs)           *11730.00  * Flow (cfs)              *
*11687.85  *   42.15  *
* Top Width (ft)          *  265.77  * Top Width (ft)          *          *
215.72  *   50.05  *
* Vel Total (ft/s)        *    5.85  * Avg. Vel. (ft/s)        *          *
5.97  *    0.86  *
```

```
                                Adjusted_Prop_for_datum
* Max Chl Dpth (ft)       *   10.96  * Hydr. Depth (ft)        *          *
9.07  *    0.98  *
* Conv. Total (cfs)       *502694.6  * Conv. (cfs)             *
*500888.3  *  1806.2  *
* Length Wtd. (ft)        *  455.30  * Wetted Per. (ft)        *          *
218.78  *   50.21  *
* Min Ch El (ft)          * 1303.01  * Shear (lb/sq ft)        *          *
0.30  *    0.03  *
* Alpha                   *    1.04  * Stream Power (lb/ft s) *          *
1.82  *    0.03  *
* Frctn Loss (ft)         *    0.24  * Cum Volume (acre-ft)    *          *
92.75  *    3.69  *
* C & E Loss (ft)         *    0.01  * Cum SA (acres)          *          *
9.82  *    2.37  *
*******************************************************************************
*****************

Note:    Multiple critical depths were found at this location.  The critical
depth with the lowest, valid,
         water surface was used.

CROSS SECTION


RIVER: EMF
REACH: Reach 4            RS: 13.755

INPUT
Description: All elevations adjusted up 2.12' for datum change.
Station Elevation Data    num=      38
     Sta    Elev     Sta    Elev     Sta    Elev     Sta    Elev     Sta
Elev
*******************************************************************************
**
 4346.51 1319.92 4355.11 1319.75 4382.62 1318.89 4410.37 1318.52 4428.28
1318.15
  4437.3 1318.07 4445.43 1317.72 4472.69  1317.7 4489.46 1317.12 4538.68
1316.82
 4567.32 1316.49 4586.96 1316.11 4603.26  1315.9 4627.02 1316.32 4640.37
1320.8
 4658.19 1319.95 4671.96  1313.9 4689.09 1313.21 4710.97 1313.12 4827.33
1313.09
 4840.54 1319.04  4851.8 1318.68  4859.9 1314.79 4872.31 1315.12 4876.99
1316.52
 4890.52  1316.3 4934.94 1302.89 4945.61 1302.64 4985.71 1302.62  4997.1
1302.88
 5017.45 1302.86 5083.19  1302.9 5114.85 1312.63 5126.01 1312.72 5130.76
1311.8
 5159.16  1311.8 5179.99 1316.08 5184.27 1316.17

Manning's n Values        num=       3
     Sta   n Val     Sta   n Val     Sta   n Val
*********************************************
 4346.51     .04 4890.52    .025 5114.85     .04

Bank Sta: Left   Right    Lengths: Left Channel   Right     Coeff Contr.
Expan.
       4890.52 5114.85              500     500     500             .1
.3
Left Levee      Station= 4876.99      Elevation= 1316.52
Right Levee     Station= 5126.01      Elevation= 1312.72
Blocked Obstructions     num=       2
   Sta L   Sta R    Elev   Sta L   Sta R    Elev
*********************************************
 4346.51    4640 1319.92    4658 4840.54 1319.04
```

CROSS SECTION OUTPUT Profile #Design

```
*****************************************************************************
*****************
* E.G. Elev (ft)          * 1311.00  * Element                 *  Left OB *
Channel * Right OB *
* Vel Head (ft)           *    0.40  * Wt. n-Val.               *          *
0.025 *          *
* W.S. Elev (ft)          * 1310.60  * Reach Len. (ft)          *  500.00  *
500.00  *  500.00  *
* Crit W.S. (ft)          * 1306.73  * Flow Area (sq ft)        *          *
1352.26  *          *
* E.G. Slope (ft/ft)      *0.000581  * Area (sq ft)             *          *
1352.26  *          *
* Q Total (cfs)           * 6900.00  * Flow (cfs)               *          *
6900.00  *          *
* Top Width (ft)          *  198.84  * Top Width (ft)           *          *
198.84  *          *
* Vel Total (ft/s)        *    5.10  * Avg. Vel. (ft/s)         *          *
5.10  *          *
* Max Chl Dpth (ft)       *    7.98  * Hydr. Depth (ft)         *          *
6.80  *          *
* Conv. Total (cfs)       *286299.3  * Conv. (cfs)              *
*286299.3  *          *
* Length Wtd. (ft)        *  500.00  * Wetted Per. (ft)         *          *
201.14  *          *
* Min Ch El (ft)          * 1302.62  * Shear (lb/sq ft)         *          *
0.24  *          *
* Alpha                   *    1.00  * Stream Power (lb/ft s)   *          *
1.24  *          *
* Frctn Loss (ft)         *    0.28  * Cum Volume (acre-ft)     *          *
48.50  *          *
* C & E Loss (ft)         *    0.01  * Cum SA (acres)           *          *
6.96  *          *
*****************************************************************************
*****************
```

Note: Multiple critical depths were found at this location. The critical depth with the lowest, valid,
water surface was used.

CROSS SECTION OUTPUT Profile #PF 5

```
*****************************************************************************
*****************
* E.G. Elev (ft)          * 1314.27  * Element                 *  Left OB *
Channel * Right OB *
* Vel Head (ft)           *    0.52  * Wt. n-Val.               *          *
0.025  *   0.040  *
* W.S. Elev (ft)          * 1313.76  * Reach Len. (ft)          *  500.00  *
500.00  *  500.00  *
* Crit W.S. (ft)          * 1308.37  * Flow Area (sq ft)        *          *
2010.21  *   83.95  *
* E.G. Slope (ft/ft)      *0.000494  * Area (sq ft)             *          *
2010.21  *   83.95  *
* Q Total (cfs)           *11730.00  * Flow (cfs)               *
*11637.15  *   92.85  *
* Top Width (ft)          *  269.72  * Top Width (ft)           *          *
215.90  *   53.82  *
* Vel Total (ft/s)        *    5.60  * Avg. Vel. (ft/s)         *          *
5.79  *    1.11  *
* Max Chl Dpth (ft)       *   11.13  * Hydr. Depth (ft)         *          *
9.31  *    1.56  *
* Conv. Total (cfs)       *528022.6  * Conv. (cfs)              *
*523843.1  *  4179.4  *
* Length Wtd. (ft)        *  500.00  * Wetted Per. (ft)         *          *
218.97  *   54.11  *
* Min Ch El (ft)          * 1302.62  * Shear (lb/sq ft)         *          *
```

```
0.28  *    0.05  *
* Alpha                    *    1.06  * Stream Power (lb/ft s) *          *
1.64  *    0.05  *
* Frctn Loss (ft)          *    0.24  * Cum Volume (acre-ft)   *          *
72.03  *    2.96  *
* C & E Loss (ft)          *    0.01  * Cum SA (acres)         *          *
7.57  *    1.80  *
*******************************************************************************
*****************
```

Note: Multiple critical depths were found at this location. The critical depth with the lowest, valid,
water surface was used.

CROSS SECTION

RIVER: EMF
REACH: Reach 4 RS: 13.661

INPUT
Description: All elevations adjusted up 2.12' for datum change.
Station Elevation Data num= 57

```
     Sta    Elev     Sta    Elev     Sta    Elev     Sta    Elev     Sta
Elev
*******************************************************************************
**
 4183.93 1322.42 4200.85 1321.52 4220.13 1320.06 4220.72 1320.22 4225.26
1318.9
 4229.39 1318.06    4252 1317.46 4259.66 1317.52 4266.52 1317.42 4300.05
1317.55
  4311.8  1318.3 4330.02 1318.89 4358.73 1319.45 4364.51 1316.62 4375.31
1316.99
 4383.32 1316.78 4392.08 1316.73 4396.63 1315.51 4400.77 1316.42 4410.17
1315.02
 4434.72  1315.3 4474.29 1315.52 4481.85  1315.5 4536.21 1316.42 4551.06
1315.9
 4564.86 1316.36 4603.11 1317.45  4609.9 1317.37 4658.58 1315.72 4722.03
1313.82
 4764.12 1313.41  4788.5 1313.75 4824.21 1314.33 4829.82 1314.42 4834.24
1313.68
 4839.89 1312.04 4846.12 1312.73 4850.08 1314.65  4869.4 1315.62 4878.08
1316.29
 4879.08 1316.13 4890.75 1316.21 4918.56  1307.3 4933.01 1302.82 4959.44
1302.44
 4974.64 1302.18  5000.6 1301.88 5005.74 1301.88 5014.49 1302.22  5021.7
1302.25
 5082.42 1302.48 5115.14 1312.42 5126.79 1312.33 5129.98 1311.12  5159.9
1311.48
 5179.65 1316.17 5192.04 1316.25
```

Manning's n Values num= 3

```
     Sta   n Val     Sta   n Val     Sta   n Val
*************************************************
 4183.93     .04 4890.75    .025 5115.14     .04
```

Bank Sta: Left Right Lengths: Left Channel Right Coeff Contr.
Expan.

```
       4890.75 5115.14              500     500     500             .1
.3
```

Left Levee Station= 4890.75 Elevation= 1316.21
Right Levee Station= 5115.14 Elevation= 1312.42

CROSS SECTION OUTPUT Profile #Design

```
*******************************************************************************
*****************
```

Adjusted_Prop_for_datum

```
* E.G. Elev (ft)          * 1310.72  * Element                 *  Left OB *
Channel * Right OB *
* Vel Head (ft)           *    0.38  * Wt. n-Val.              *          *
0.025  *          *
* W.S. Elev (ft)          * 1310.34  * Reach Len. (ft)         *  500.00  *
500.00  *  500.00  *
* Crit W.S. (ft)          * 1306.27  * Flow Area (sq ft)       *          *
1392.48  *          *
* E.G. Slope (ft/ft)      *0.000528  * Area (sq ft)            *          *
1392.48  *          *
* Q Total (cfs)           * 6900.00  * Flow (cfs)              *          *
6900.00  *          *
* Top Width (ft)          *  199.22  * Top Width (ft)          *          *
199.22  *          *
* Vel Total (ft/s)        *    4.96  * Avg. Vel. (ft/s)        *          *
4.96  *          *
* Max Chl Dpth (ft)       *    8.46  * Hydr. Depth (ft)        *          *
6.99  *          *
* Conv. Total (cfs)       *300226.8  * Conv. (cfs)             *
*300226.8  *          *
* Length Wtd. (ft)        *  500.00  * Wetted Per. (ft)         *          *
201.55  *          *
* Min Ch El (ft)          * 1301.88  * Shear (lb/sq ft)         *          *
0.23  *          *
* Alpha                   *    1.00  * Stream Power (lb/ft s)   *          *
1.13  *          *
* Frctn Loss (ft)         *    0.27  * Cum Volume (acre-ft)     *          *
32.74  *          *
* C & E Loss (ft)         *    0.00  * Cum SA (acres)           *          *
4.68  *          *
*******************************************************************************
*****************
```

Note: Multiple critical depths were found at this location. The critical depth with the lowest, valid,
water surface was used.

CROSS SECTION OUTPUT Profile #PF 5

```
*******************************************************************************
*****************
* E.G. Elev (ft)          * 1314.03  * Element                 *  Left OB *
Channel * Right OB *
* Vel Head (ft)           *    0.49  * Wt. n-Val.              *          *
0.025  *   0.040  *
* W.S. Elev (ft)          * 1313.54  * Reach Len. (ft)         *  500.00  *
500.00  *  500.00  *
* Crit W.S. (ft)          * 1307.89  * Flow Area (sq ft)       *          *
2060.32  *   95.16  *
* E.G. Slope (ft/ft)      *0.000454  * Area (sq ft)            *          *
2060.32  *   95.16  *
* Q Total (cfs)           *11730.00  * Flow (cfs)              *
*11619.96  *  110.04  *
* Top Width (ft)          *  269.47  * Top Width (ft)          *          *
216.05  *   53.42  *
* Vel Total (ft/s)        *    5.44  * Avg. Vel. (ft/s)        *          *
5.64  *    1.16  *
* Max Chl Dpth (ft)       *   11.66  * Hydr. Depth (ft)        *          *
9.54  *    1.78  *
* Conv. Total (cfs)       *550582.9  * Conv. (cfs)             *
*545418.1  *  5164.9  *
* Length Wtd. (ft)        *  500.00  * Wetted Per. (ft)         *          *
219.19  *   53.89  *
* Min Ch El (ft)          * 1301.88  * Shear (lb/sq ft)         *          *
0.27  *    0.05  *
* Alpha                   *    1.06  * Stream Power (lb/ft s)   *          *
1.50  *    0.06  *
```

```
                                Adjusted_Prop_for_datum
* Frctn Loss (ft)          *    0.23  * Cum Volume (acre-ft)    *          *
48.66  *    1.93  *
* C & E Loss (ft)          *    0.00  * Cum SA (acres)          *          *
5.09  *    1.18  *
*******************************************************************************
*****************

Note:    Multiple critical depths were found at this location.  The critical
depth with the lowest, valid,
         water surface was used.

CROSS SECTION


RIVER: EMF
REACH: Reach 4            RS: 13.566

INPUT
Description: All elevations adjusted up 2.12' for datum change.
Station Elevation Data    num=      52
     Sta    Elev     Sta    Elev     Sta    Elev     Sta    Elev     Sta
Elev
*******************************************************************************
**
 3918.56 1326.47 3928.99 1322.95 3947.33 1322.82 3952.92 1321.45 3956.52
1322.06
 3965.45 1320.29 3991.61 1319.81 4017.16 1319.32 4056.43 1318.67 4083.12
1318.32
 4133.87 1317.58 4195.22  1316.6 4214.73 1316.42 4263.92 1315.82 4297.79
1315.19
 4348.89 1314.07 4413.87  1313.3 4426.76 1313.32 4485.21 1312.94 4502.82
1313.12
 4509.96 1312.98 4518.57 1313.01 4532.69 1313.32 4542.66 1313.37 4612.34
1314.09
 4640.09 1314.29 4658.32 1314.33 4714.44 1314.62  4774.1 1314.96 4793.19
1315.31
 4806.59 1315.83 4819.28 1316.16 4827.87 1321.32 4840.83 1320.87 4846.28
1316.93
 4858.79 1316.28 4863.04 1315.39 4875.09 1316.12 4887.86 1316.29 4936.05
1302.56
 4958.48  1302.2 5007.87 1301.87 5042.34 1301.62 5055.28 1301.58 5078.85
1302.04
 5102.61 1309.37 5111.94 1312.17 5127.25 1311.82 5129.61 1311.55 5158.02
1311.29
 5179.18 1316.15 5192.63 1316.49

Manning's n Values        num=       3
     Sta   n Val     Sta   n Val     Sta   n Val
*********************************************
 3918.56     .04 4887.86    .025 5111.94     .04

Bank Sta: Left   Right    Lengths: Left Channel   Right     Coeff Contr.
Expan.
       4887.86 5111.94              500     500     500             .1
.3
Left Levee      Station= 4887.86      Elevation= 1316.29
Right Levee     Station= 5111.94      Elevation= 1312.17

CROSS SECTION OUTPUT  Profile #Design
*******************************************************************************
*****************
* E.G. Elev (ft)          * 1310.45  * Element                 *  Left OB *
Channel * Right OB *
* Vel Head (ft)           *    0.40  * Wt. n-Val.              *          *
0.025  *          *
* W.S. Elev (ft)          * 1310.05  * Reach Len. (ft)         *  500.00  *
```

```
500.00  *  500.00  *
* Crit W.S. (ft)          * 1306.03  * Flow Area (sq ft)      *          *
1359.63  *          *
* E.G. Slope (ft/ft)      *0.000556  * Area (sq ft)           *          *
1359.63  *          *
* Q Total (cfs)           * 6900.00  * Flow (cfs)             *          *
6900.00  *          *
* Top Width (ft)          *  195.09  * Top Width (ft)         *          *
195.09  *          *
* Vel Total (ft/s)        *    5.07  * Avg. Vel. (ft/s)       *          *
5.07  *          *
* Max Chl Dpth (ft)       *    8.47  * Hydr. Depth (ft)       *          *
6.97  *          *
* Conv. Total (cfs)       *292589.3  * Conv. (cfs)            *
*292589.3  *          *
* Length Wtd. (ft)        *  500.00  * Wetted Per. (ft)       *          *
197.35  *          *
* Min Ch El (ft)          * 1301.58  * Shear (lb/sq ft)       *          *
0.24  *          *
* Alpha                   *    1.00  * Stream Power (lb/ft s) *          *
1.21  *          *
* Frctn Loss (ft)         *    0.23  * Cum Volume (acre-ft)   *          *
16.95  *          *
* C & E Loss (ft)         *    0.03  * Cum SA (acres)         *          *
2.41  *          *
*****************************************************************************
*****************

Note:    Multiple critical depths were found at this location.  The critical
depth with the lowest, valid,
         water surface was used.

CROSS SECTION OUTPUT  Profile #PF 5
*****************************************************************************
*****************
* E.G. Elev (ft)          * 1313.79  * Element               *  Left OB *
Channel * Right OB *
* Vel Head (ft)           *    0.51  * Wt. n-Val.             *          *
0.025  *   0.040  *
* W.S. Elev (ft)          * 1313.28  * Reach Len. (ft)        *  500.00  *
500.00  *  500.00  *
* Crit W.S. (ft)          * 1307.68  * Flow Area (sq ft)      *          *
2024.79  *   85.09  *
* E.G. Slope (ft/ft)      *0.000475  * Area (sq ft)           *          *
2024.79  *   85.09  *
* Q Total (cfs)           *11730.00  * Flow (cfs)             *
*11637.88  *   92.12  *
* Top Width (ft)          *  268.29  * Top Width (ft)         *          *
213.53  *   54.76  *
* Vel Total (ft/s)        *    5.56  * Avg. Vel. (ft/s)       *          *
5.75  *    1.08  *
* Max Chl Dpth (ft)       *   11.70  * Hydr. Depth (ft)       *          *
9.48  *    1.55  *
* Conv. Total (cfs)       *538357.7  * Conv. (cfs)            *
*534129.9  *  4227.8  *
* Length Wtd. (ft)        *  500.00  * Wetted Per. (ft)       *          *
216.55  *   55.01  *
* Min Ch El (ft)          * 1301.58  * Shear (lb/sq ft)       *          *
0.28  *    0.05  *
* Alpha                   *    1.06  * Stream Power (lb/ft s) *          *
1.59  *    0.05  *
* Frctn Loss (ft)         *    0.20  * Cum Volume (acre-ft)   *          *
25.22  *    0.90  *
* C & E Loss (ft)         *    0.04  * Cum SA (acres)         *          *
2.62  *    0.56  *
*****************************************************************************
```

```
*****************

Note:    Multiple critical depths were found at this location.  The critical
depth with the lowest, valid,
         water surface was used.

CROSS SECTION


RIVER: EMF
REACH: Reach 4            RS: 13.471

INPUT
Description: Upstream End of Reach 3. All elevations adjusted up 2.12' for
             datum change.
Q(D)=6,900 cfs, Q(F)=8,970 cfs & Q(E)=12,910
             cfs
Start Water Surface Elevations Used for This Cross Section
             Were Calculated from Reach 3 HEC-RAS Runs
Station Elevation Data    num=      32
     Sta    Elev     Sta    Elev     Sta    Elev     Sta    Elev     Sta
Elev
*******************************************************************************
**
 4667.89 1316.02 4683.64 1315.64    4692 1315.52 4706.01 1318.04  4713.6
1319.31
 4722.09 1318.42  4729.7 1318.05 4741.51 1318.12 4778.38  1317.9 4793.66
1317.67
 4800.51 1315.92 4804.12 1317.11 4808.22 1315.83 4826.85  1315.4 4845.01
1315.22
 4856.34 1316.62 4872.16 1316.23 4878.86 1314.37 4922.23 1302.17 4925.17
1302.06
 4959.53 1302.02 5001.83 1301.69 5006.27 1301.72 5057.94 1301.55 5069.75
1301.62
 5093.27 1302.12 5126.43 1311.62 5140.83 1311.39 5142.94 1311.05 5161.38
1311.43
 5180.69 1315.72 5193.03 1316.32

Manning's n Values        num=       3
     Sta   n Val     Sta   n Val     Sta   n Val
***********************************************
 4667.89     .04 4872.16    .025 5126.43     .04

Bank Sta: Left   Right    Lengths: Left Channel   Right     Coeff Contr.
Expan.
       4872.16 5126.43                0       0       0             .3
.5
Left Levee      Station= 4856.34      Elevation= 1316.62
Right Levee     Station= 5193.03      Elevation= 1316.32

CROSS SECTION OUTPUT  Profile #Design
*******************************************************************************
*****************
* E.G. Elev (ft)          * 1310.18  * Element                 *  Left OB *
Channel * Right OB *
* Vel Head (ft)           *    0.29  * Wt. n-Val.              *          *
0.025  *          *
* W.S. Elev (ft)          * 1309.89  * Reach Len. (ft)         *          *
   *          *
* Crit W.S. (ft)          * 1305.46  * Flow Area (sq ft)       *          *
1593.36  *          *
* E.G. Slope (ft/ft)      *0.000397  * Area (sq ft)            *          *
1593.36  *          *
* Q Total (cfs)           * 6900.00  * Flow (cfs)              *          *
6900.00  *          *
* Top Width (ft)          *  225.61  * Top Width (ft)          *          *
```

```
225.61  *          *
* Vel Total (ft/s)       *    4.33  * Avg. Vel. (ft/s)       *          *
4.33  *          *
* Max Chl Dpth (ft)      *    8.34  * Hydr. Depth (ft)       *          *
7.06  *          *
* Conv. Total (cfs)      *346400.0  * Conv. (cfs)            *
*346400.0  *          *
* Length Wtd. (ft)       *          * Wetted Per. (ft)       *          *
227.77  *          *
* Min Ch El (ft)         * 1301.55  * Shear (lb/sq ft)       *          *
0.17  *          *
* Alpha                  *    1.00  * Stream Power (lb/ft s) *          *
0.75  *          *
* Frctn Loss (ft)        *          * Cum Volume (acre-ft)   *          *
    *          *
* C & E Loss (ft)        *          * Cum SA (acres)         *          *
    *          *
*******************************************************************************
*****************

Note:    Multiple critical depths were found at this location.  The critical
depth with the lowest, valid,
         water surface was used.

CROSS SECTION OUTPUT  Profile #PF 5
*******************************************************************************
*****************
* E.G. Elev (ft)         * 1313.55  * Element                *  Left OB *
Channel * Right OB *
* Vel Head (ft)          *    0.37  * Wt. n-Val.             *          *
0.025  *   0.040  *
* W.S. Elev (ft)         * 1313.18  * Reach Len. (ft)        *          *
    *          *
* Crit W.S. (ft)         * 1306.94  * Flow Area (sq ft)      *          *
2369.49  *   70.92  *
* E.G. Slope (ft/ft)     *0.000335  * Area (sq ft)           *          *
2369.49  *   70.92  *
* Q Total (cfs)          *11730.00  * Flow (cfs)             *
*11662.74  *   67.26  *
* Top Width (ft)         *  286.17  * Top Width (ft)         *          *
243.34  *   42.83  *
* Vel Total (ft/s)       *    4.81  * Avg. Vel. (ft/s)       *          *
4.92  *    0.95  *
* Max Chl Dpth (ft)      *   11.63  * Hydr. Depth (ft)       *          *
9.74  *    1.66  *
* Conv. Total (cfs)      *640889.9  * Conv. (cfs)            *
*637215.0  *  3674.9  *
* Length Wtd. (ft)       *          * Wetted Per. (ft)       *          *
246.20  *   43.05  *
* Min Ch El (ft)         * 1301.55  * Shear (lb/sq ft)       *          *
0.20  *    0.03  *
* Alpha                  *    1.04  * Stream Power (lb/ft s) *          *
0.99  *    0.03  *
* Frctn Loss (ft)        *          * Cum Volume (acre-ft)   *          *
    *          *
* C & E Loss (ft)        *          * Cum SA (acres)         *          *
    *          *
*******************************************************************************
*****************

Note:    Multiple critical depths were found at this location.  The critical
depth with the lowest, valid,
         water surface was used.

*******************************************************************************
**
```

SUMMARY OF MANNING'S N VALUES

River:EMF

Reach	River Sta.	n1	n2	n3
Reach 4	15.035	.04	.025	.04
Reach 4	14.926	.04	.025	.04
Reach 4	14.823	.04	.025	.04
Reach 4	14.764	.04	.025	.04
Reach 4	14.754	.04	.025	.04
Reach 4	14.738	.04	.025	.04
Reach 4	14.637	.04	.025	.04
Reach 4	14.412	.04	.025	.04
Reach 4	14.3	.04	.025	.04
Reach 4	14.191	.04	.025	.04
Reach 4	14	.04	.025	.04
Reach 4	13.968	.04	.03	.04
Reach 4	13.954	Bridge		
Reach 4	13.940	.04	.03	.04
Reach 4	13.911	.04	.025	.04
Reach 4	13.842	.04	.025	.04
Reach 4	13.755	.04	.025	.04
Reach 4	13.661	.04	.025	.04
Reach 4	13.566	.04	.025	.04
Reach 4	13.471	.04	.025	.04

****
**

SUMMARY OF REACH LENGTHS

River: EMF

Reach	River Sta.	Left	Channel	Right
Reach 4	15.035	574.6	574.6	574.6
Reach 4	14.926	915	545.66	470
Reach 4	14.823	311.48	311.48	311.48
Reach 4	14.764	52.59	52.59	52.59
Reach 4	14.754	87.83	87.83	87.83
Reach 4	14.738	528.63	528.63	528.63
Reach 4	14.637	720	1188.15	1270
Reach 4	14.412	594.77	594.77	594.77
Reach 4	14.3	840	571.41	525
Reach 4	14.191	1011.04	1011.04	1011.04
Reach 4	14	356.5	171.04	46.5
Reach 4	13.968	147.84	147.84	147.84
Reach 4	13.954	Bridge		
Reach 4	13.940	35	150.77	286.5
Reach 4	13.911	275	368.56	380
Reach 4	13.842	350	455.16	480
Reach 4	13.755	500	500	500
Reach 4	13.661	500	500	500
Reach 4	13.566	500	500	500
Reach 4	13.471	0	0	0

****
**

SUMMARY OF CONTRACTION AND EXPANSION COEFFICIENTS
River: EMF

Adjusted_Prop_for_datum

Reach	River Sta.	Contr.	Expan.
Reach 4	15.035	.1	.3
Reach 4	14.926	.1	.3
Reach 4	14.823	.1	.3
Reach 4	14.764	.1	.3
Reach 4	14.754	.1	.3
Reach 4	14.738	.1	.3
Reach 4	14.637	.1	.3
Reach 4	14.412	.1	.3
Reach 4	14.3	.1	.3
Reach 4	14.191	.1	.3
Reach 4	14	.3	.5
Reach 4	13.968	.3	.5
Reach 4	13.954	Bridge	
Reach 4	13.940	.3	.5
Reach 4	13.911	.3	.5
Reach 4	13.842	.1	.3
Reach 4	13.755	.1	.3
Reach 4	13.661	.1	.3
Reach 4	13.566	.1	.3
Reach 4	13.471	.3	.5

****
**

ERRORS WARNINGS AND NOTES
Errors Warnings and Notes for Plan : Prop REACH 4

River: EMF Reach: Reach 4 RS: 15.035 Profile: Design
Note: Multiple critical depths were found at this location. The critical depth with the lowest, valid, water surface was used.
River: EMF Reach: Reach 4 RS: 15.035 Profile: PF 5
Warning:Divided flow computed for this cross-section.
Note: Multiple critical depths were found at this location. The critical depth with the lowest, valid, water surface was used.
River: EMF Reach: Reach 4 RS: 14.926 Profile: Design
Note: Multiple critical depths were found at this location. The critical depth with the lowest, valid, water surface was used.
River: EMF Reach: Reach 4 RS: 14.926 Profile: PF 5
Warning:The cross-section end points had to be extended vertically for the computed water surface.
Note: Multiple critical depths were found at this location. The critical depth with the lowest, valid, water surface was used.
River: EMF Reach: Reach 4 RS: 14.823 Profile: Design
Note: Multiple critical depths were found at this location. The critical depth with the lowest, valid, water surface was used.
River: EMF Reach: Reach 4 RS: 14.823 Profile: PF 5
Warning:The cross-section end points had to be extended vertically for the computed water surface.
Note: Multiple critical depths were found at this location. The critical depth with the lowest, valid, water surface was used.
River: EMF Reach: Reach 4 RS: 14.764 Profile: Design
Warning:The velocity head has changed by more than 0.5 ft (0.15 m). This may indicate the need for additional cross sections.
Warning:The conveyance ratio (upstream conveyance divided by downstream conveyance) is less than 0.7 or greater than 1.4.
This may indicate the need for additional cross sections.

Note: Multiple critical depths were found at this location. The critical depth with the lowest, valid, water surface was used.

River: EMF Reach: Reach 4 RS: 14.764 Profile: PF 5

Warning:The cross-section end points had to be extended vertically for the computed water surface.

Warning:The velocity head has changed by more than 0.5 ft (0.15 m). This may indicate the need for additional cross sections.

Warning:The conveyance ratio (upstream conveyance divided by downstream conveyance) is less than 0.7 or greater than 1.4. This may indicate the need for additional cross sections.

Note: Multiple critical depths were found at this location. The critical depth with the lowest, valid, water surface was used.

River: EMF Reach: Reach 4 RS: 14.754 Profile: Design

Warning:The energy equation could not be balanced within the specified number of iterations. The program used critical depth for the water surface and continued on with the calculations.

Warning:The velocity head has changed by more than 0.5 ft (0.15 m). This may indicate the need for additional cross sections.

Warning:The conveyance ratio (upstream conveyance divided by downstream conveyance) is less than 0.7 or greater than 1.4. This may indicate the need for additional cross sections.

Warning:The energy loss was greater than 1.0 ft (0.3 m). between the current and previous cross section. This may indicate the need for additional cross sections.

Warning:During the standard step iterations, when the assumed water surface was set equal to critical depth, the calculated water surface came back below critical depth. This indicates that there is not a valid subcritical answer. The program defaulted to critical depth.

Note: Multiple critical depths were found at this location. The critical depth with the lowest, valid, water surface was used.

River: EMF Reach: Reach 4 RS: 14.754 Profile: PF 5

Warning:The energy equation could not be balanced within the specified number of iterations. The program used critical depth for the water surface and continued on with the calculations.

Warning:The velocity head has changed by more than 0.5 ft (0.15 m). This may indicate the need for additional cross sections.

Warning:The conveyance ratio (upstream conveyance divided by downstream conveyance) is less than 0.7 or greater than 1.4. This may indicate the need for additional cross sections.

Warning:The energy loss was greater than 1.0 ft (0.3 m). between the current and previous cross section. This may indicate the need for additional cross sections.

Warning:During the standard step iterations, when the assumed water surface was set equal to critical depth, the calculated water surface came back below critical depth. This indicates that there is not a valid subcritical answer. The program defaulted to critical depth.

Note: Multiple critical depths were found at this location. The critical depth with the lowest, valid, water surface was used.

River: EMF Reach: Reach 4 RS: 14.738 Profile: Design

Note: Multiple critical depths were found at this location. The critical depth with the lowest, valid, water surface was used.

River: EMF Reach: Reach 4 RS: 14.738 Profile: PF 5

Warning:The conveyance ratio (upstream conveyance divided by downstream conveyance) is less than 0.7 or greater than 1.4. This may indicate the need for additional cross sections.

Note: Multiple critical depths were found at this location. The critical depth with the lowest, valid, water surface was used.

River: EMF Reach: Reach 4 RS: 14.637 Profile: Design

Note: Multiple critical depths were found at this location. The critical depth with the lowest, valid, water surface was used.

River: EMF Reach: Reach 4 RS: 14.637 Profile: PF 5

Note: Multiple critical depths were found at this location. The critical depth with the lowest, valid, water surface was used.

River: EMF Reach: Reach 4 RS: 14.412 Profile: Design

Note: Multiple critical depths were found at this location. The critical depth with the lowest, valid, water surface was used.

River: EMF Reach: Reach 4 RS: 14.412 Profile: PF 5

Note: Multiple critical depths were found at this location. The critical depth with the lowest, valid, water surface was used.

River: EMF Reach: Reach 4 RS: 14.3 Profile: Design

Note: Multiple critical depths were found at this location. The critical depth with the lowest, valid, water surface was used.

River: EMF Reach: Reach 4 RS: 14.3 Profile: PF 5

Note: Multiple critical depths were found at this location. The critical depth with the lowest, valid, water surface was used.

River: EMF Reach: Reach 4 RS: 14.191 Profile: Design

Note: Multiple critical depths were found at this location. The critical depth with the lowest, valid, water surface was used.

River: EMF Reach: Reach 4 RS: 14.191 Profile: PF 5

Note: Multiple critical depths were found at this location. The critical depth with the lowest, valid, water surface was used.

River: EMF Reach: Reach 4 RS: 14 Profile: Design

Note: Multiple critical depths were found at this location. The critical depth with the lowest, valid, water surface was used.

River: EMF Reach: Reach 4 RS: 14 Profile: PF 5

Note: Multiple critical depths were found at this location. The critical depth with the lowest, valid, water surface was used.

River: EMF Reach: Reach 4 RS: 13.968 Profile: Design

Note: Multiple critical depths were found at this location. The critical depth with the lowest, valid, energy was used.

River: EMF Reach: Reach 4 RS: 13.968 Profile: PF 5

Warning:The conveyance ratio (upstream conveyance divided by downstream conveyance) is less than 0.7 or greater than 1.4. This may indicate the need for additional cross sections.

Note: Multiple critical depths were found at this location. The critical depth with the lowest, valid, energy was used.

River: EMF Reach: Reach 4 RS: 13.954 Profile: Design

Warning:The Yarnell method gave an invalid answer. The upstream energy was less than the downstream energy. The program defaulted to the next valid (user selected) method. If the Yarnell method was the only one selected, the program will default to an energy based solution.

Warning:For the final momentum answer at the bridge, the upstream energy was computed lower than the downstream energy. This is not physically possible, the momentum answer has been disregarded.

River: EMF Reach: Reach 4 RS: 13.954 Profile: PF 5

Warning:The Yarnell method gave an invalid answer. The upstream energy was less than the downstream energy. The program defaulted to the next valid (user selected) method. If the Yarnell method was the only one selected, the program will default to an energy based solution.

River: EMF Reach: Reach 4 RS: 13.954 Profile: PF 5 Downstream

Warning:The conveyance ratio (upstream conveyance divided by downstream

conveyance) is less than 0.7 or greater than 1.4.
This may indicate the need for additional cross sections.
River: EMF Reach: Reach 4 RS: 13.940 Profile: Design
Note: Multiple critical depths were found at this location. The critical depth with the lowest, valid, energy was used.
River: EMF Reach: Reach 4 RS: 13.940 Profile: PF 5
Warning:Divided flow computed for this cross-section.
Note: Multiple critical depths were found at this location. The critical depth with the lowest, valid, energy was used.
River: EMF Reach: Reach 4 RS: 13.911 Profile: Design
Note: Multiple critical depths were found at this location. The critical depth with the lowest, valid, water surface was used.
River: EMF Reach: Reach 4 RS: 13.911 Profile: PF 5
Note: Multiple critical depths were found at this location. The critical depth with the lowest, valid, water surface was used.
River: EMF Reach: Reach 4 RS: 13.842 Profile: Design
Note: Multiple critical depths were found at this location. The critical depth with the lowest, valid, water surface was used.
River: EMF Reach: Reach 4 RS: 13.842 Profile: PF 5
Note: Multiple critical depths were found at this location. The critical depth with the lowest, valid, water surface was used.
River: EMF Reach: Reach 4 RS: 13.755 Profile: Design
Note: Multiple critical depths were found at this location. The critical depth with the lowest, valid, water surface was used.
River: EMF Reach: Reach 4 RS: 13.755 Profile: PF 5
Note: Multiple critical depths were found at this location. The critical depth with the lowest, valid, water surface was used.
River: EMF Reach: Reach 4 RS: 13.661 Profile: Design
Note: Multiple critical depths were found at this location. The critical depth with the lowest, valid, water surface was used.
River: EMF Reach: Reach 4 RS: 13.661 Profile: PF 5
Note: Multiple critical depths were found at this location. The critical depth with the lowest, valid, water surface was used.
River: EMF Reach: Reach 4 RS: 13.566 Profile: Design
Note: Multiple critical depths were found at this location. The critical depth with the lowest, valid, water surface was used.
River: EMF Reach: Reach 4 RS: 13.566 Profile: PF 5
Note: Multiple critical depths were found at this location. The critical depth with the lowest, valid, water surface was used.
River: EMF Reach: Reach 4 RS: 13.471 Profile: Design
Note: Multiple critical depths were found at this location. The critical depth with the lowest, valid, water surface was used.
River: EMF Reach: Reach 4 RS: 13.471 Profile: PF 5
Note: Multiple critical depths were found at this location. The critical depth with the lowest, valid, water surface was used.

Scour Calculations

AZTEC ENGINEERING
4561 E. McDowell Road
Phoenix, AZ 85008-4505
Phone (602) 454-0402
Fax (602) 454-0403

Project: HIGLEY-DB
Computed by: TAD
Checked by: RHF
Sheet Name:
Project No: AZE0810
Date: 7-29-08
Date: 7-31-08
Sheet: 1 Of: 1

HIGLEY ROAD BRIDGE
OVER EMF
SCOUR RESULTS (500-yr)

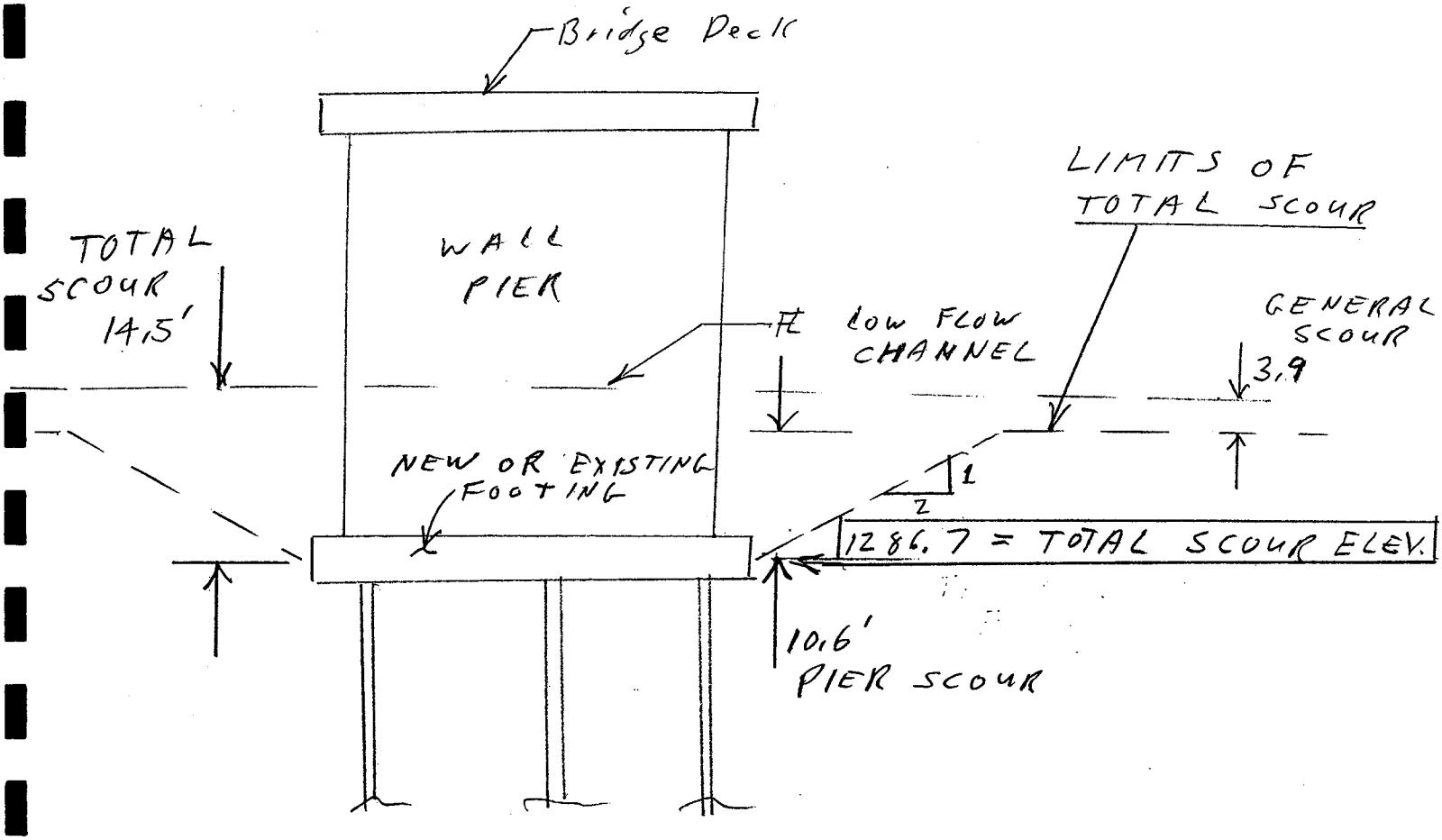

AZTEC ENGINEERING
4561 E. McDowell Road
Phoenix, AZ 85008-4505
Phone (602) 454-0402
Fax (602) 454-0403

Project: Higley Rd. Bridge Scour | Project No: AZE0810
Computed by: TAB | Date: 7-21-08
Checked by: RHF | Date: 7-29-08
Sheet Name: General Scour | Sheet: 1 | Of: 2

GENERAL SCOUR (500-YR)

HIGLEY RD., BRIDGE OVER EMF

REFERENCE

COMPUTING DEGRADATION AND LOCAL SCOUR - BOR

HEC-18 pg. 11-1

NINYO & MOOR Geotech Report Boring Log & Sieve analysis

LACEY EQUATION

$$d_m = 0.47 \left(\frac{Q}{f}\right)^{1/3}$$

$Q = 11{,}730$ cfs

$f = 1.76 (D_m)^{1/2}$, $D_m = 1.25 \times D_{50}$ (mm)

$D_{50} = 0.11$ mm $\therefore$ $D_m = 0.14$

$f = 0.66$

$d_m = 11.9$

$d_s = Z\, d_m$

$Z = 0.25$ for Straight Reach

$d_s = 0.25 \times 11.9$

$d_s = 3.0'$

TOTAL SCOUR

$D_s = 1.3(d_s) + Y_s$

$D_s = 1.3(3.0) + 10.6'$

$D_s = 14.5$

Ys on Sht 2 of 2

SCOUR ELEVATION

$E_s = E_{BED} - D_s$ $\quad E_{BED} = 1301.2$

$E_s = 1301.2 - 14.5$

$E_s = 1286.7$

NEW AZTEC SURVEY

AZTEC ENGINEERING
4561 E. McDowell Road
Phoenix, AZ 85008-4505
Phone (602) 454-0402
Fax (602) 454-0403

Project: Higley Road Bridge Scour | Project No: AZE0810
Computed by: RHF | Date: 7-21-08
Checked by: TAB | Date: 7-25-08
Sheet Name: PIER SCOUR-500-yr | Sheet: 2 Of: 2

References

Pier Contraction Scour

U.S. Cross Section = 13.968, Q = 11,730 cfs (1.7 * 6,900 cfs) — EMF HEC-RAS

$Y_s/Y_1 = 2.0\,(K_1 K_2 K_3 K_4)\left(\frac{a}{Y_1}\right)^{0.65}(Fr_1)^{0.43}$ — HEC-18 pg 36 Eq. 21

Y_s = Pier Contraction Scour Depth (m)

Y_1 = Flow Depth directly U.S. of the Pier = 12.98' = 3.956 m — EMF HEC-RAS

K_1 = Correction factor for pier nose shape (Fig 7, Table 2) = 1.0 (round) — HEC-18, pg 37

K_2 = Correction for angle of attack of flow (Table 3, Eq. 23) $\theta = \phi \therefore K_2 = 1.0$ — HEC-18, pg 37

K_3 = Correction for bed condition from Table 4 (Use clear water Scour) = 1.1 — HEC18, pg 37

K_4 = Correction for armoring by bed material size (use most conservative) = 1.0 — HEC18, pg 38

pier width = 2.0' = 0.610 m — Higley Rd. Plans

Fr_1 = Froude number at cross-section 13.968 = 0.32 — EMF HEC-RAS

Debris = 4' = 1.219 m

a = pier width + Debris = 0.610 m + 1.219 m = 1.829 m

V_1 = 5.17 fps = 1.576 m/s — EMF HEC-RAS

g = 32.2 ft/s² = 9.81 m/s²

Y_s/Y_1 = 0.816

$\boxed{Y_s = 3.229\text{ m} = 10.59'}$

HEC-RAS Plan: Prop REACH 4 River: EMF Reach: Reach 4 Profile: PF 5

Reach	River Sta	Profile	Q Total	Min Ch El	W.S. Elev	Crit W.S.	E.G. Elev	E.G. Slope	Vel Chnl	Flow Area	Top Width	Froude # Chl
			(cfs)	(ft)	(ft)	(ft)	(ft)	(ft/ft)	(ft/s)	(sq ft)	(ft)	
Reach 4	15.035	PF 5	11730.00	1308.99	1320.84	1314.90	1321.17	0.000328	4.91	3676.62	1373.28	0.28
Reach 4	14.926	PF 5	11730.00	1308.40	1320.68	1314.41	1320.99	0.000294	4.75	3732.28	1151.24	0.26
Reach 4	14.823	PF 5	11730.00	1308.51	1320.59	1314.36	1320.80	0.000228	4.14	5108.54	1623.85	0.23
Reach 4	14.764	PF 5	11730.00	1308.42	1320.56	1314.22	1320.72	0.000187	3.81	5849.75	1751.51	0.21
Reach 4	14.754	PF 5	11730.00	1308.44	1317.02	1317.02	1320.38	0.004949	14.71	797.59	118.01	1.00
Reach 4	14.738	PF 5	11730.00	1304.54	1316.26	1311.16	1316.97	0.000665	6.79	1726.85	181.23	0.39
Reach 4	14.637	PF 5	11730.00	1304.29	1316.27	1310.00	1316.63	0.000322	4.93	3261.60	1172.14	0.27
Reach 4	14.412	PF 5	11730.00	1303.72	1315.78	1309.76	1316.21	0.000385	5.35	2679.12	973.53	0.30
Reach 4	14.3	PF 5	11730.00	1303.66	1315.55	1309.50	1315.98	0.000382	5.33	2629.12	826.86	0.30
Reach 4	14.191	PF 5	11730.00	1303.32	1315.36	1309.13	1315.76	0.000354	5.21	2689.93	626.76	0.29
Reach 4	14	PF 5	11730.00	1303.02	1314.95	1308.92	1315.39	0.000385	5.36	2509.33	1048.01	0.30
Reach 4	13.968	PF 5	11730.00	1301.89	1314.87	1309.14	1315.29	0.000682	5.17	2269.12	279.27	0.32
Reach 4	13.954		Bridge									
Reach 4	13.940	PF 5	11730.00	1302.29	1314.30	1309.38	1314.83	0.000954	5.82	2015.16	268.73	0.37
Reach 4	13.911	PF 5	11730.00	1303.00	1314.20	1308.79	1314.72	0.000490	5.78	2087.69	264.53	0.33
Reach 4	13.842	PF 5	11730.00	1303.01	1313.97	1308.87	1314.52	0.000544	5.97	2005.46	265.77	0.35
Reach 4	13.755	PF 5	11730.00	1302.62	1313.76	1308.37	1314.27	0.000494	5.79	2094.16	269.72	0.33
Reach 4	13.661	PF 5	11730.00	1301.88	1313.54	1307.89	1314.03	0.000454	5.64	2155.48	269.47	0.32
Reach 4	13.566	PF 5	11730.00	1301.58	1313.28	1307.68	1313.79	0.000475	5.75	2109.87	268.29	0.33
Reach 4	13.471	PF 5	11730.00	1301.55	1313.18	1306.94	1313.55	0.000335	4.92	2440.42	286.17	0.28

GRAVEL		SAND			FINES	
Coarse	Fine	Coarse	Medium	Fine	SILT	CLAY

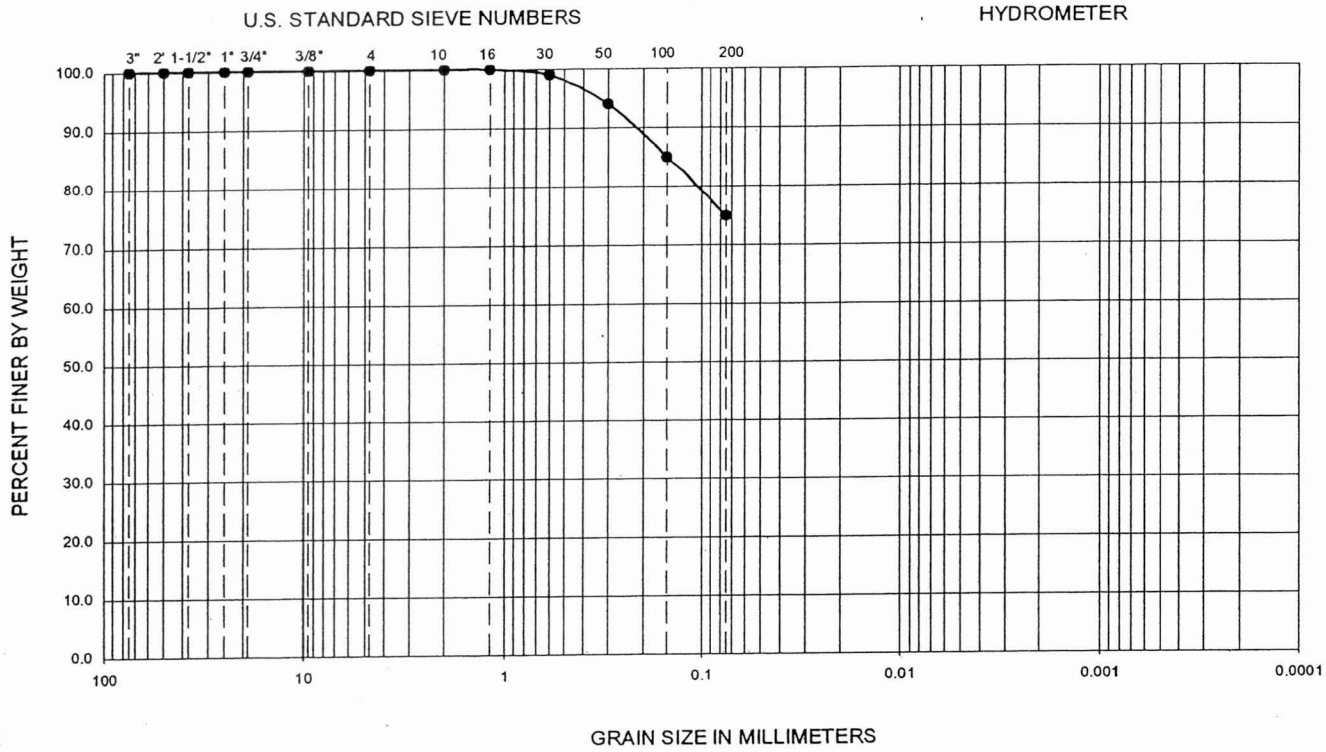

Symbol	Sample Location	Depth (ft)	Liquid Limit	Plastic Limit	Plasticity Index	D_{10}	D_{30}	D_{60}	C_u	C_c	Passing No. 200 (%)	USCS
●	B-3	3.5-5	23	18	5	--	--	--	--	--	75	CL-ML

PERFORMED IN GENERAL ACCORDANCE WITH ASTM D 422-63 (02)

dm = 0.075mm

Ninyo & Moore	GRADATION TEST RESULTS	FIGURE
PROJECT NO. / DATE	HIGLEY ROAD BRIDGE IMPROVEMENTS EAST MARICOPA FLOODWAY TO 1,370 FEET NORTH GILBERT, ARIZONA	B-2
602130001 / 7/08		

GRAVEL		SAND			FINES	
Coarse	Fine	Coarse	Medium	Fine	SILT	CLAY

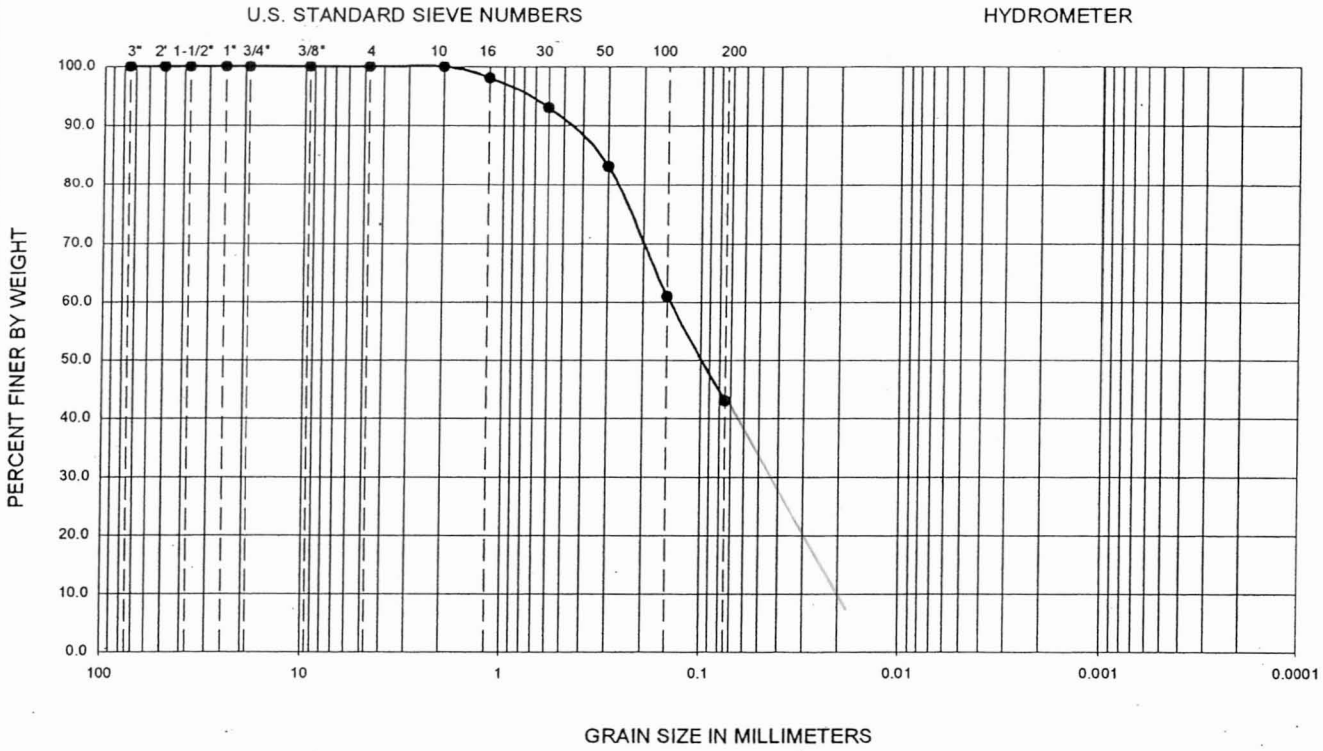

$D_{16} = .02$
$D_{50} = .1$
$D_{60} = .45$

Symbol	Sample Location	Depth (ft)	Liquid Limit	Plastic Limit	Plasticity Index	D_{10}	D_{30}	D_{60}	C_u	C_c	Passing No. 200 (%)	USCS
●	B-4	23.5-25	NP	NP	NP	--	--	--	--	--	43	SM

PERFORMED IN GENERAL ACCORDANCE WITH ASTM D 422-63 (02)

NP - INDICATES NON-PLASTIC

$d_{50} = 0.1$ mm

Ninyo & Moore	GRADATION TEST RESULTS	FIGURE
PROJECT NO. 602130001 / DATE 7/08	HIGLEY ROAD BRIDGE IMPROVEMENTS EAST MARICOPA FLOODWAY TO 1,370 FEET NORTH GILBERT, ARIZONA	B-3

GRAVEL		SAND			FINES	
Coarse	Fine	Coarse	Medium	Fine	SILT	CLAY

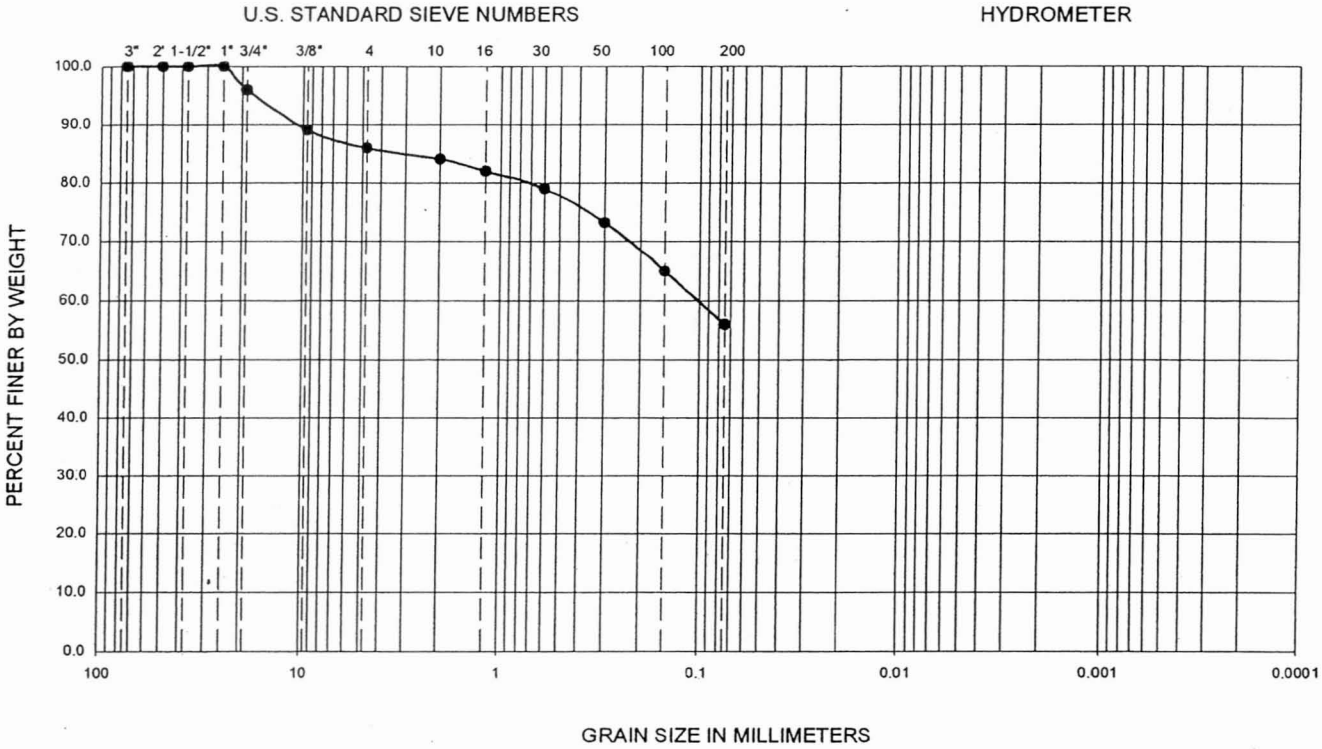

Symbol	Sample Location	Depth (ft)	Liquid Limit	Plastic Limit	Plasticity Index	D_{10}	D_{30}	D_{60}	C_u	C_c	Passing No. 200 (%)	USCS
●	B-5	43.5-45	31	18	13	--	--	--	--	--	56	CL

PERFORMED IN GENERAL ACCORDANCE WITH ASTM D 422-63 (02)

$d_{50} = 0.075$ mm

Ninyo & Moore	GRADATION TEST RESULTS	FIGURE
PROJECT NO. / DATE	HIGLEY ROAD BRIDGE IMPROVEMENTS EAST MARICOPA FLOODWAY TO 1,370 FEET NORTH GILBERT, ARIZONA	B-4
602130001 / 7/08		

GRAVEL		SAND			FINES	
Coarse	Fine	Coarse	Medium	Fine	SILT	CLAY

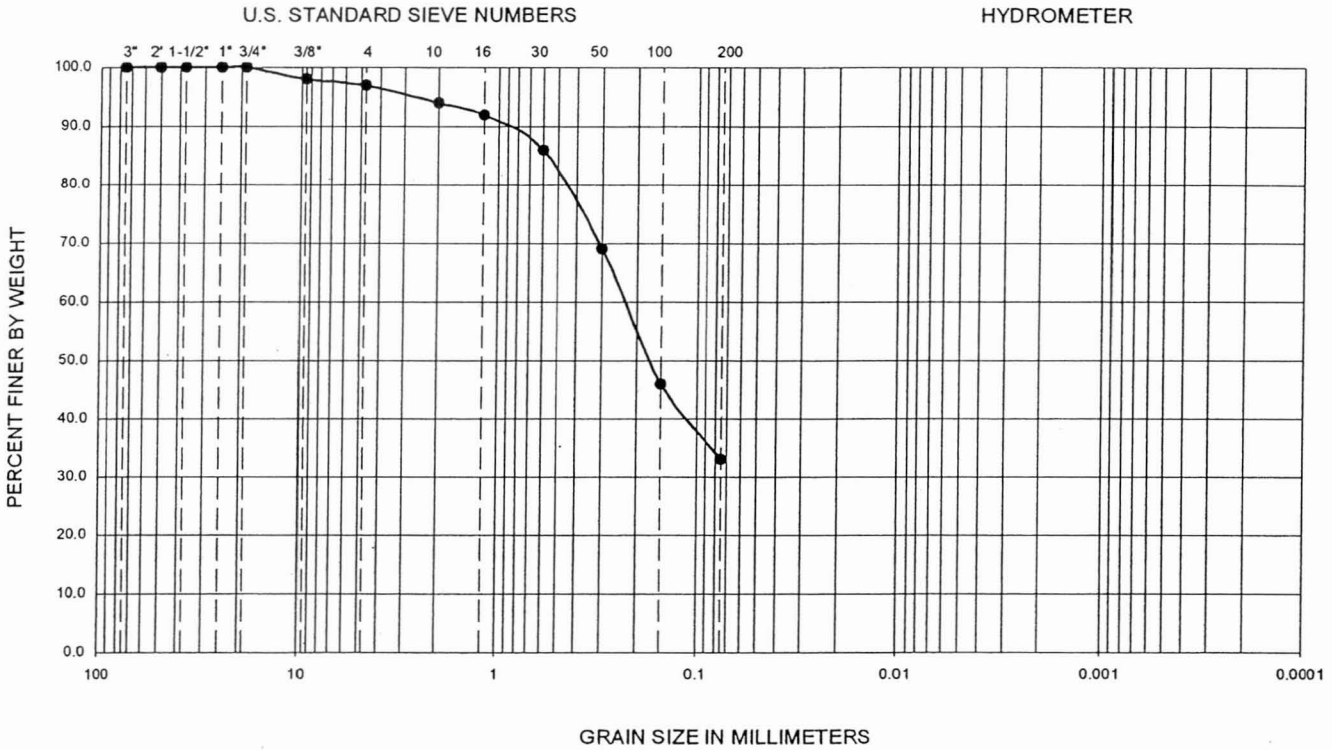

Symbol	Sample Location	Depth (ft)	Liquid Limit	Plastic Limit	Plasticity Index	D_{10}	D_{30}	D_{60}	C_u	C_c	Passing No. 200 (%)	USCS
●	B-7	6-7.5	NP	NP	NP	--	--	--	--	--	33	SM

PERFORMED IN GENERAL ACCORDANCE WITH ASTM D 422-63 (02)

NP - INDICATES NON-PLASTIC

$d_{50} = 0.17$ mm

Ninyo & Moore	GRADATION TEST RESULTS	FIGURE
PROJECT NO. 602130001 / DATE 7/08	HIGLEY ROAD BRIDGE IMPROVEMENTS EAST MARICOPA FLOODWAY TO 1,370 FEET NORTH GILBERT, ARIZONA	B-5

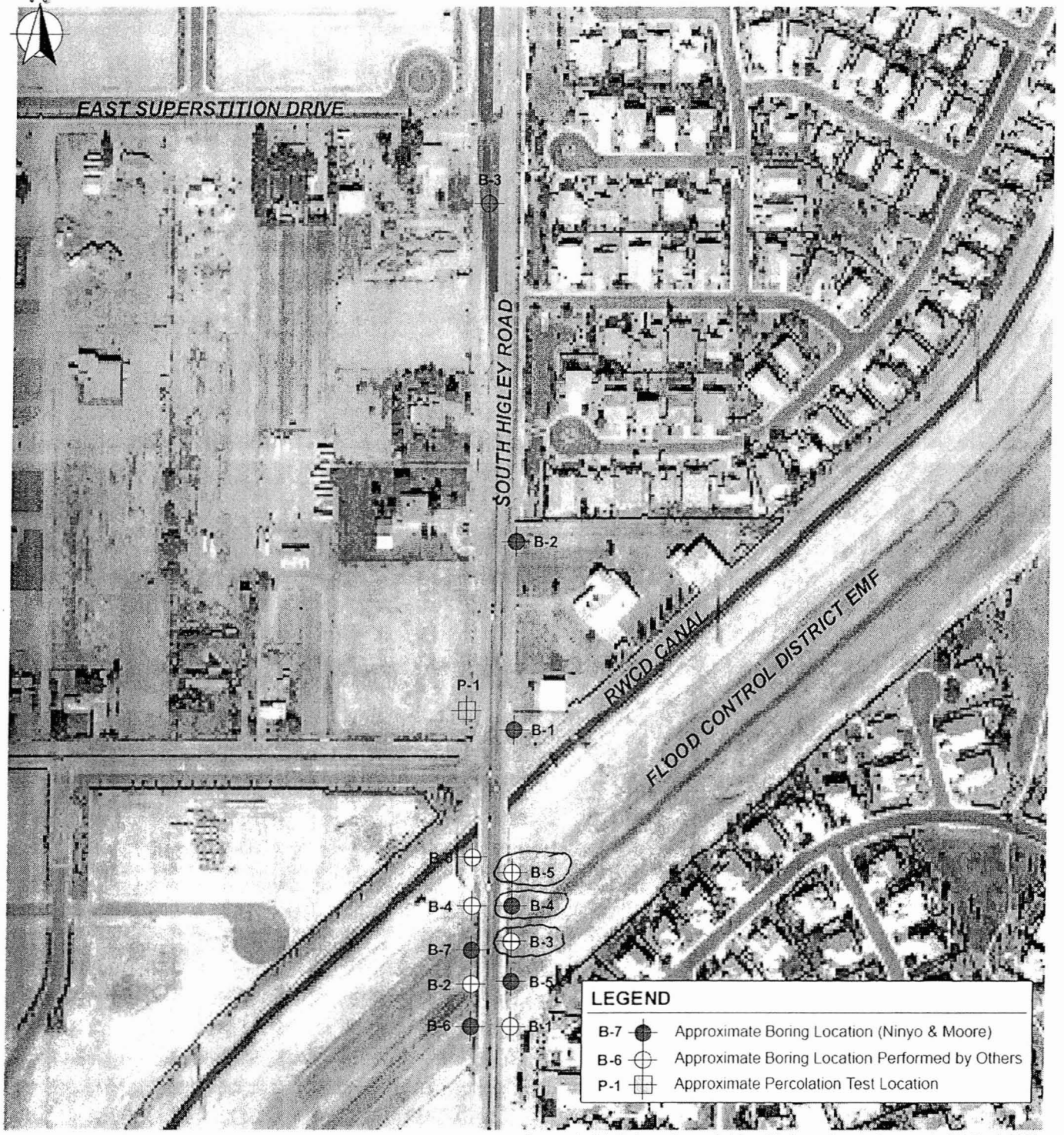

Source: Aerial photograph supplied from Maricopa County Assessor's GIS Dept, 2008

0 280

Approximate Scale:
1 inch = 280 feet

Ninyo & Moore	SITE LOCATION MAP	FIGURE
PROJECT NO.: 602130001 / DATE: 7/08	HIGLEY ROAD BRIDGE IMPROVEMENTS EAST MARICOPA FLOODWAY TO 1,370 FEET NORTH GILBERT, ARIZONA	2

file no: 2130blm0708b

AZTEC ENGINEERING
4561 E. McDowell Road
Phoenix, AZ 85008-4505
Phone (602) 454-0402
Fax (602) 454-0403

Project: AZE0810 Higley Rd DB
Project No:
Computed by: RHF
Date: 8-14-08
Checked by:
Date:
Sheet Name
Sheet: 1 Of: 4

Scour Depth at Existing 30" Waterline (100-YR)

100-Yr General Scour Depth = 3.3'
100-Yr Pier Scour Depth = 9.6' 1291.6
100-Yr Total Scour Depth = 12.9' 1288.3

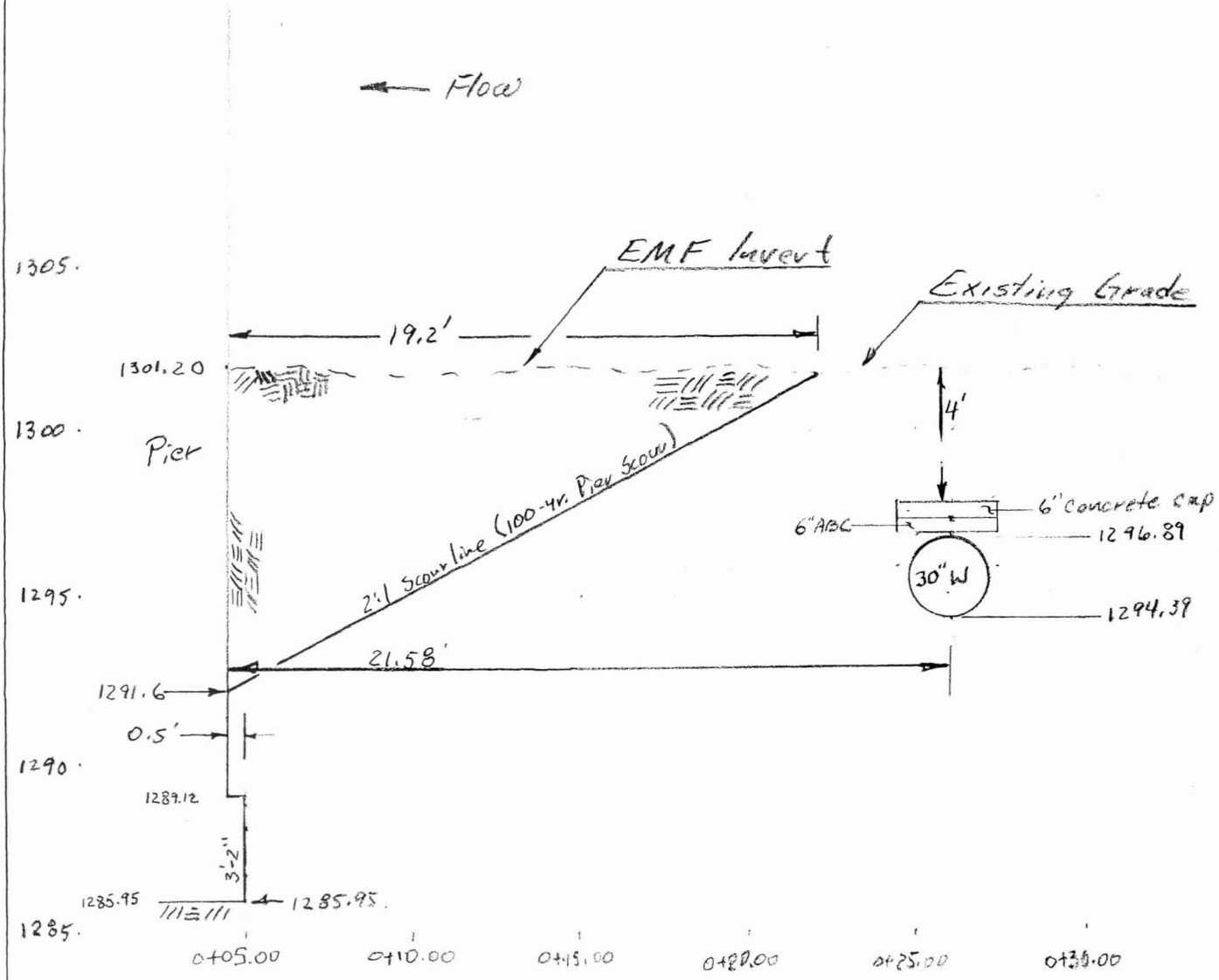

1" = 5'

AZTEC ENGINEERING
4561 E. McDowell Road
Phoenix, AZ 85008-4505
Phone (602) 454-0402
Fax (602) 454-0403

Project: HIGLEY-DB | Project No: AZE0810
Computed by: TAD | Date: 7-29-08
Checked by: RHF | Date: 7-31-08
Sheet Name: | Sheet: 2 Of: 4

HIGLEY ROAD BRIDGE OVER EMF

SCOUR RESULTS (100-yr)

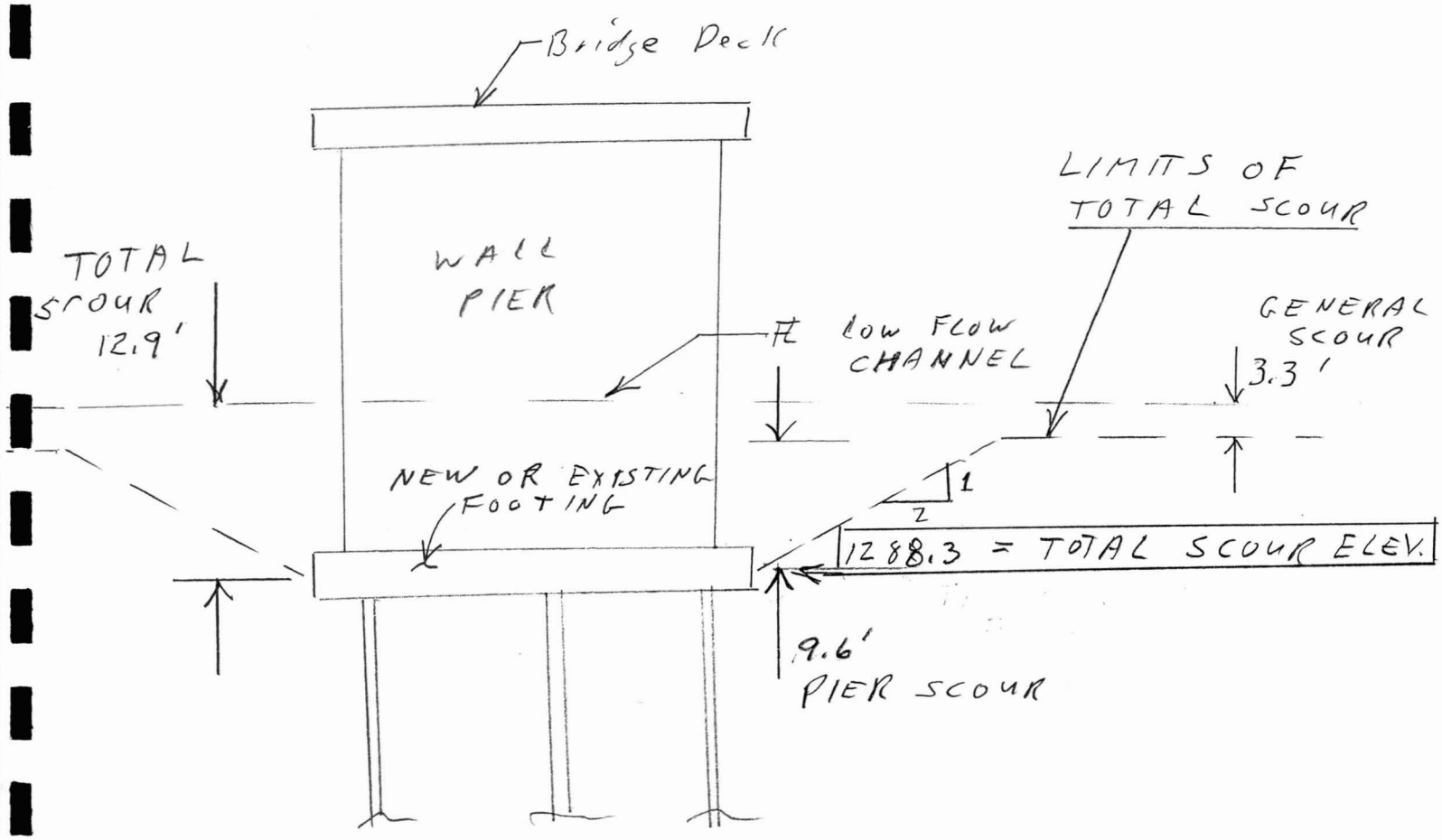

AZTEC ENGINEERING
4561 E. McDowell Road
Phoenix, AZ 85008-4505
Phone (602) 454-0402
Fax (602) 454-0403

Project: Higley Rd DB - Bridge Scour | Project No: AZEOB10
Computed by: RHF | Date: 8-18-08
Checked by: | Date:
Sheet Name: General Scour Calcs. | Sheet: 3 | Of: 4

References

General Scour (100-yr)

Higley Rd., Bridge over the EMF

Lacey Equation

Computing Degradation and local scour - BOR

$$d_m = 0.47 \left(\frac{Q}{f}\right)^{1/3}$$

HEC-18: pg 11-12

$Q = 6900$ cfs

$f = 1.76 (D_m)^{0.5}$, $D_m = 1.25 * d_{50}$ (mm)

$d_{50} = 0.11$ mm $\therefore D_m = 0.14$

$f = 0.66$

NINYO & Moore Geotech Report Boring Log: Sieve Analysis

$d_m = 9.96$

$d_s = 0.25 * 9.96$

$\boxed{d_s = 2.5'}$

Total Scour:

$D_s = 1.3 (d_s) + Y_s$

$D_s = 1.3 (2.5') + 9.6'$

$D_s = 12.9'$

Ys on sheet 3 of 3

Scour Elevation

$E_s = E_{bed} - D_s$

$E_s = 1301.2 - 12.9$

$\boxed{E_s = 1288.30}$

New Aztec Survey

AZTEC ENGINEERING
4561 E. McDowell Road
Phoenix, AZ 85008-4505
Phone (602) 454-0402
Fax (602) 454-0403

Project: Higley Rd DB Bridge Scour | Project No: AZE0810
Computed by: RHF | Date: 8-18-08
Checked by: | Date:
Sheet Name: Pier Scour; 100-yr | Sheet: 4 | Of: 4

References

Pier Contraction Scour

U.S. X-sec: 13.968, Q = 6,900 cfs (Design 100-yr. Flow) — EMF: HEC-RAS

$Y_s/Y_1 = 2.0\,(K_1 K_2 K_3 K_4)\left(\frac{a}{Y_1}\right)^{0.65}(Fr_1)^{0.43}$ — HEC-18 pg 36 EQ. 21

Y_s = Pier Contraction Scour Depth (m)

Y_1 = Flow Depth Directly U.S. of the Pier = 9.64' = 2.938m — EMF: HEC-RAS

K_1 = Correction factor for pier nose shape (Fig 7, Table 2) = 1.0 (round) — HEC-18: pg 37

K_2 = Correction for angle of attack of flow (Table 3, Eq. 23) $\theta = \emptyset$ ∴ $K_2 = 1.0$ — HEC-18: pg 37

K_3 = Correction for bed condition from Table 4 (Use Clear Water Scour) = 1.1 — HEC18: pg 37

K_4 = Correction for armoring by bed material size (use most conservative) = 1.0 — HEC18: pg 38

pier width = 2.0' = 0.610 m — Higley Rd Plans

Fr_1 = Froude number at cross section 13.968 = 0.33 — EMF HEC-RAS

Debris = 4' = 1.219 m

a = pier width + Debris = 0.610m + 1.219m = 1.829m

V_1 = 4.95 fps = 1.509 m/s — EMF HEC-RAS

g = 32.2 ft/s² = 9.81 m/s²

Y_s/Y_1 = 1.00

$\boxed{Y_s = 2.938\,m = 9.64'}$

HEC-RAS Plan: Prop REACH 4 River: EMF Reach: Reach 4 Profile: Design

Reach	River Sta	Profile	Q Total	Min Ch El	W.S. Elev	Crit W.S.	E.G. Elev	E.G. Slope	Vel Chnl	Flow Area	Top Width	Froude # Chl
			(cfs)	(ft)	(ft)	(ft)	(ft)	(ft/ft)	(ft/s)	(sq ft)	(ft)	
Reach 4	15.035	Design	6900.00	1308.99	1317.80	1313.25	1318.14	0.000441	4.67	1478.37	202.24	0.30
Reach 4	14.926	Design	6900.00	1308.40	1317.57	1312.76	1317.89	0.000398	4.52	1525.79	202.46	0.29
Reach 4	14.823	Design	6900.00	1308.51	1317.33	1312.72	1317.66	0.000427	4.61	1495.29	202.88	0.30
Reach 4	14.764	Design	6900.00	1308.42	1317.21	1312.64	1317.53	0.000416	4.57	1508.36	203.20	0.30
Reach 4	14.754	Design	6900.00	1308.44	1314.71	1314.71	1317.25	0.005465	12.81	538.66	106.19	1.00
Reach 4	14.738	Design	6900.00	1304.54	1313.30	1309.32	1313.80	0.000669	5.70	1210.87	167.04	0.37
Reach 4	14.637	Design	6900.00	1304.29	1313.17	1308.39	1313.48	0.000388	4.43	1556.37	209.05	0.29
Reach 4	14.412	Design	6900.00	1303.72	1312.64	1308.13	1312.98	0.000443	4.68	1473.05	200.98	0.30
Reach 4	14.3	Design	6900.00	1303.66	1312.38	1307.86	1312.72	0.000446	4.69	1471.26	201.18	0.31
Reach 4	14.191	Design	6900.00	1303.32	1312.14	1307.52	1312.47	0.000419	4.61	1498.29	200.70	0.30
Reach 4	14	Design	6900.00	1303.02	1311.67	1307.32	1312.02	0.000467	4.75	1451.30	201.33	0.31
Reach 4	13.968	Design	6900.00	1301.89	1311.53	1307.55	1311.91	0.000780	4.95	1394.26	203.53	0.33
Reach 4	13.954		Bridge									
Reach 4	13.940	Design	6900.00	1302.29	1311.21	1307.73	1311.66	0.001012	5.38	1282.09	200.99	0.38
Reach 4	13.911	Design	6900.00	1303.00	1311.13	1307.20	1311.52	0.000552	5.02	1375.51	199.82	0.34
Reach 4	13.842	Design	6900.00	1303.01	1310.86	1307.26	1311.29	0.000642	5.27	1310.41	198.33	0.36
Reach 4	13.755	Design	6900.00	1302.62	1310.60	1306.73	1311.00	0.000581	5.10	1352.26	198.84	0.34
Reach 4	13.661	Design	6900.00	1301.88	1310.34	1306.27	1310.72	0.000528	4.96	1392.48	199.22	0.33
Reach 4	13.566	Design	6900.00	1301.58	1310.05	1306.03	1310.45	0.000556	5.07	1359.63	195.09	0.34
Reach 4	13.471	Design	6900.00	1301.55	1309.89	1305.46	1310.18	0.000397	4.33	1593.36	225.61	0.29

Appendix B:

On-Site Drainage

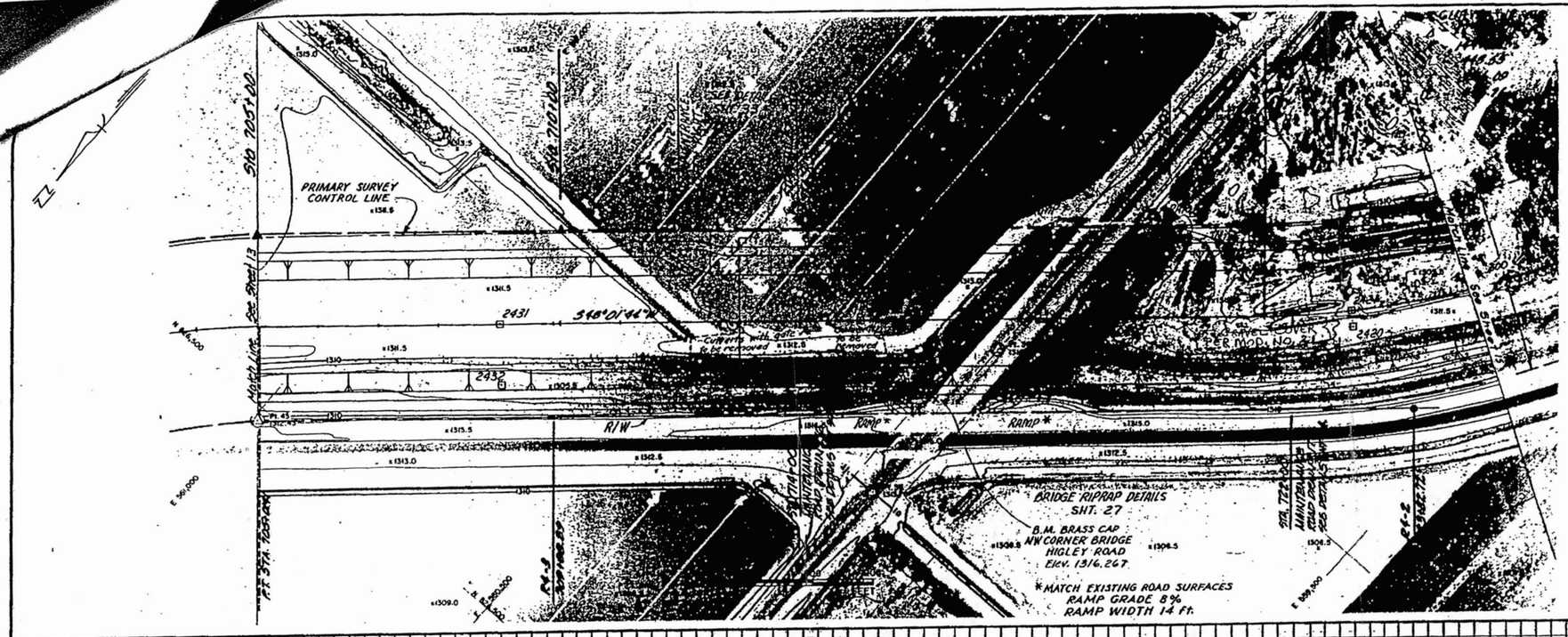
PRIMARY SURVEY CONTROL LINE
STA 705+00
STA 710+00
Match Line See Sheet 13
2431
S48°01'44"W
2432
2420
R/W
Ramp *
Ramp *
BRIDGE RIPRAP DETAILS
SHT. 27
B.M. BRASS CAP
NW CORNER BRIDGE
HIGLEY ROAD
Elev. 1316.267
*MATCH EXISTING ROAD SURFACES
RAMP GRADE 8%
RAMP WIDTH 14 ft.

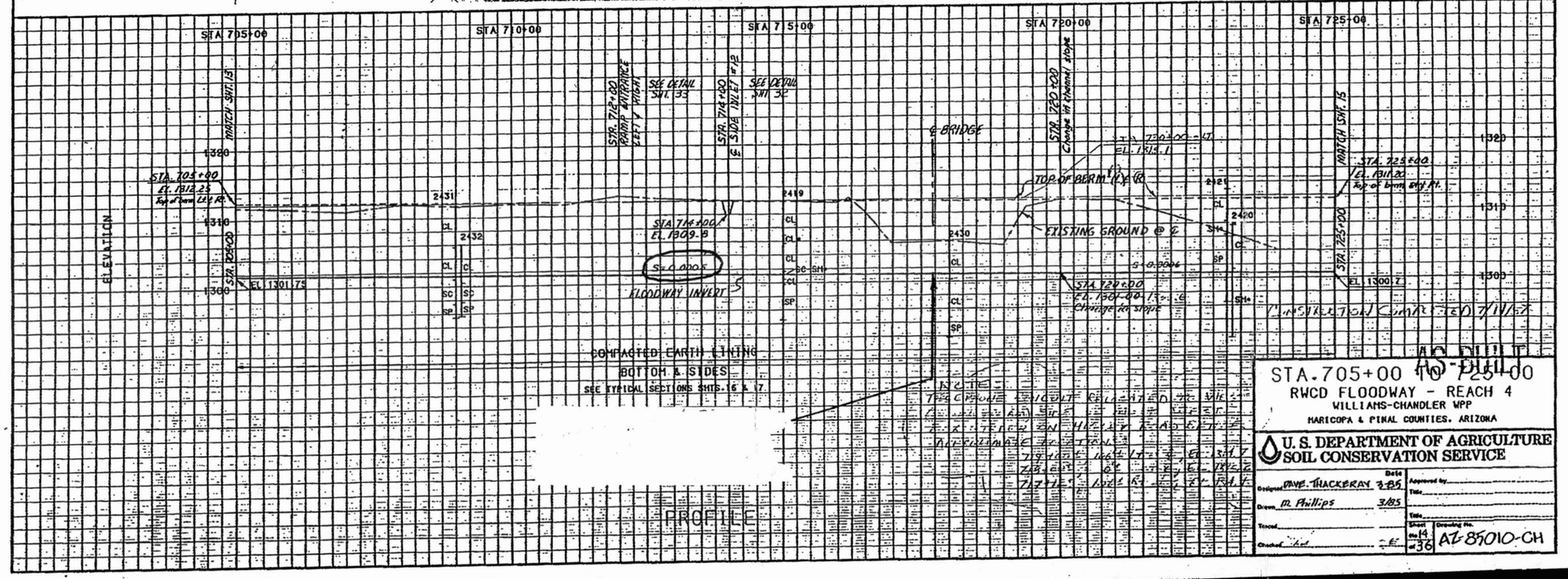
STA 705+00
STA 710+00
STA 715+00
STA 720+00
STA 725+00
MATCH SHT. 13
STA. 712+00 RAMP ALIGNMENT SEE TYPICAL
SEE DETAIL SHT. 33
STA. 714+00 ℄ SIDE INLET #13
SEE DETAIL SHT. 32
℄ BRIDGE
STA. 720+00 Change in channel slope
MATCH SHT. 15
STA. 725+00
EL. 1312.25
STA. 714+00
EL. 1309.8
FLOODWAY INVERT
EL 1301.75
TOP OF BERM
EXISTING GROUND @ ℄
STA. 720+00
EL. 1301.00
Change in slope
EL 1300.7
ELEVATION
COMPACTED EARTH LINING
BOTTOM & SIDES
SEE TYPICAL SECTIONS SHTS. 16 & 17
PROFILE
STA. 705+00 TO 725+00
RWCD FLOODWAY - REACH 4
WILLIAMS-CHANDLER WPP
MARICOPA & PINAL COUNTIES, ARIZONA
U. S. DEPARTMENT OF AGRICULTURE
SOIL CONSERVATION SERVICE
Designed DAVE THACKERAY 3-85
Drawn M. Phillips 3/85
Traced
Checked
Approved by
Title
Sheet 14 of 36
Drawing No. AZ-85010-CH

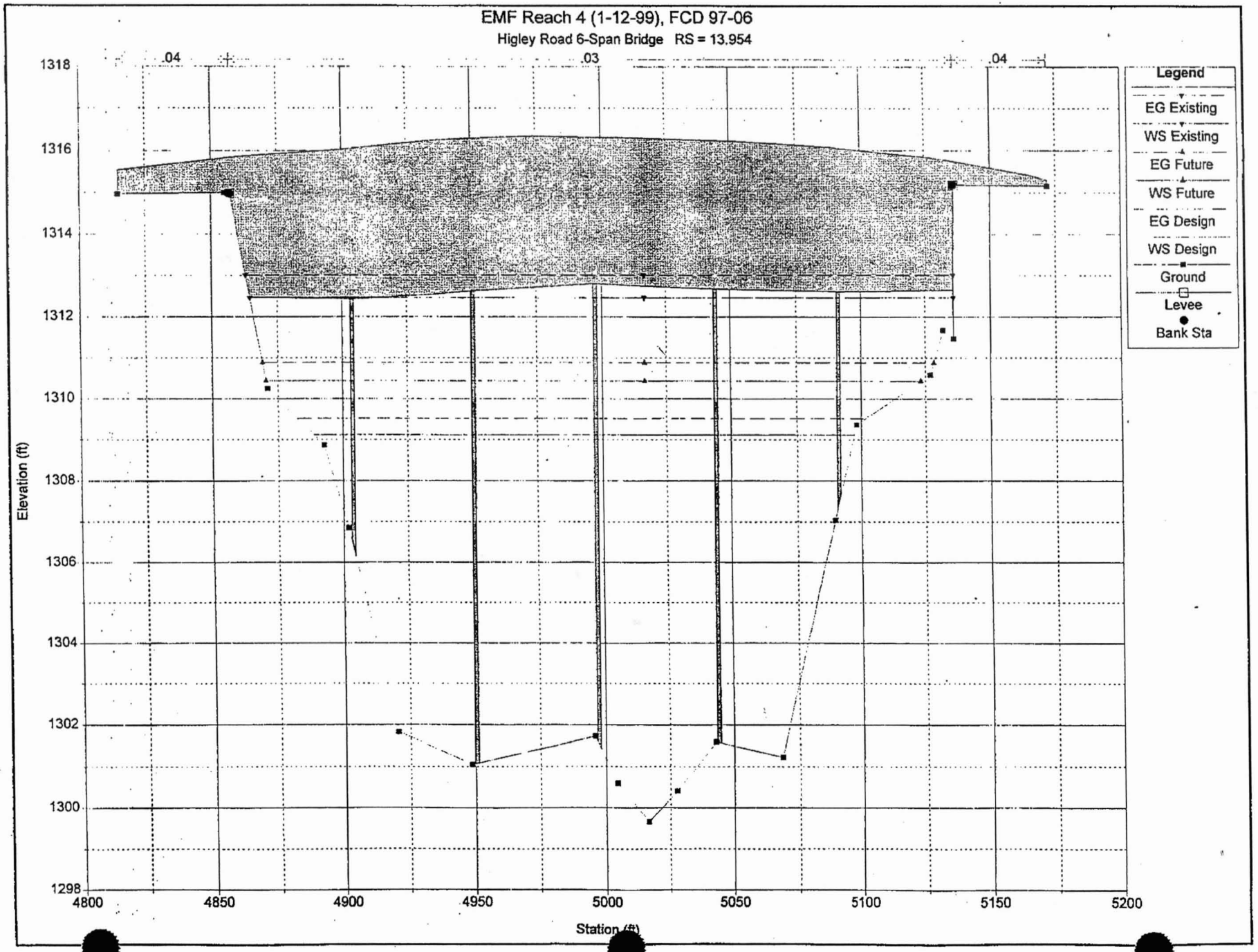
EMF Reach 4 (1-12-99), FCD 97-06
Higley Road 6-Span Bridge RS = 13.954
.04
.03
.04
Legend
EG Existing
WS Existing
EG Future
WS Future
EG Design
WS Design
Ground
Levee
Bank Sta
Elevation (ft)
1318
1316
1314
1312
1310
1308
1306
1304
1302
1300
1298
4800
4850
4900
4950
5000
5050
5100
5150
5200
Station (ft)

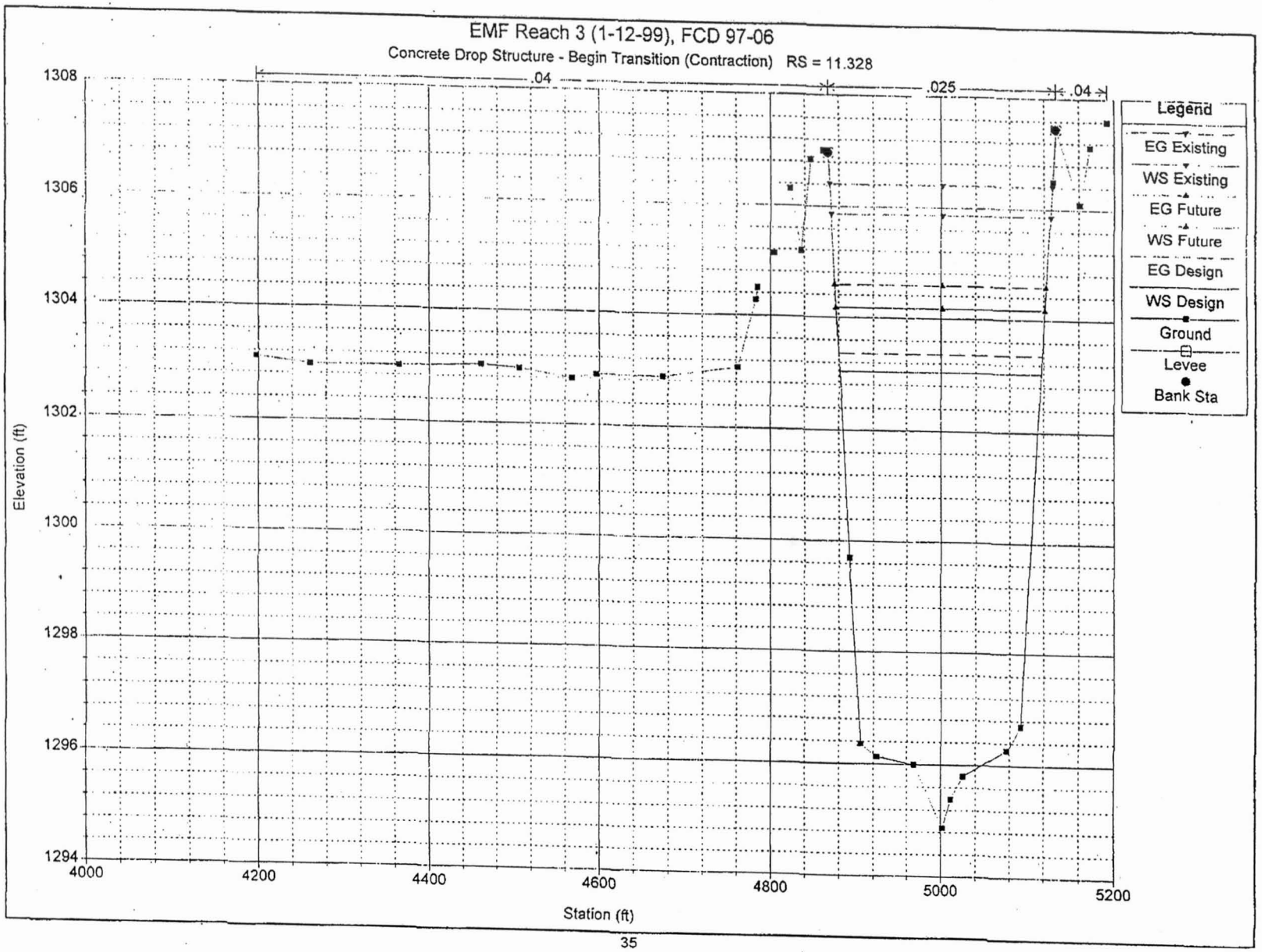
EMF Reach 3 (1-12-99), FCD 97-06
Concrete Drop Structure - Begin Transition (Contraction) RS = 11.328
.04
.025
.04
Legend
EG Existing
WS Existing
EG Future
WS Future
EG Design
WS Design
Ground
Levee
Bank Sta
Elevation (ft)
1308
1306
1304
1302
1300
1298
1296
1294
4000
4200
4400
4600
4800
5000
5200
Station (ft)

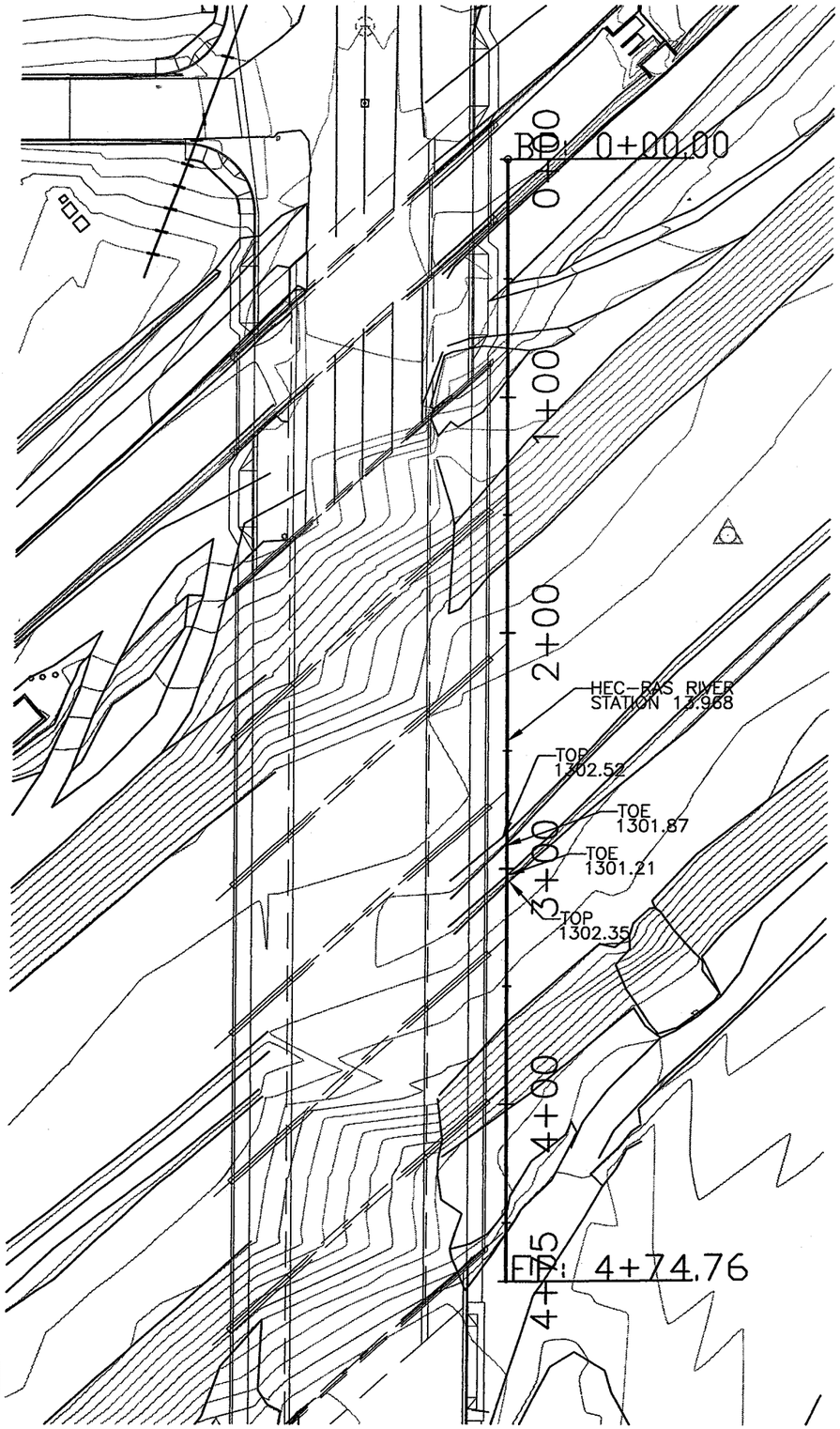

HEC-RAS RIVER STATION 13.968

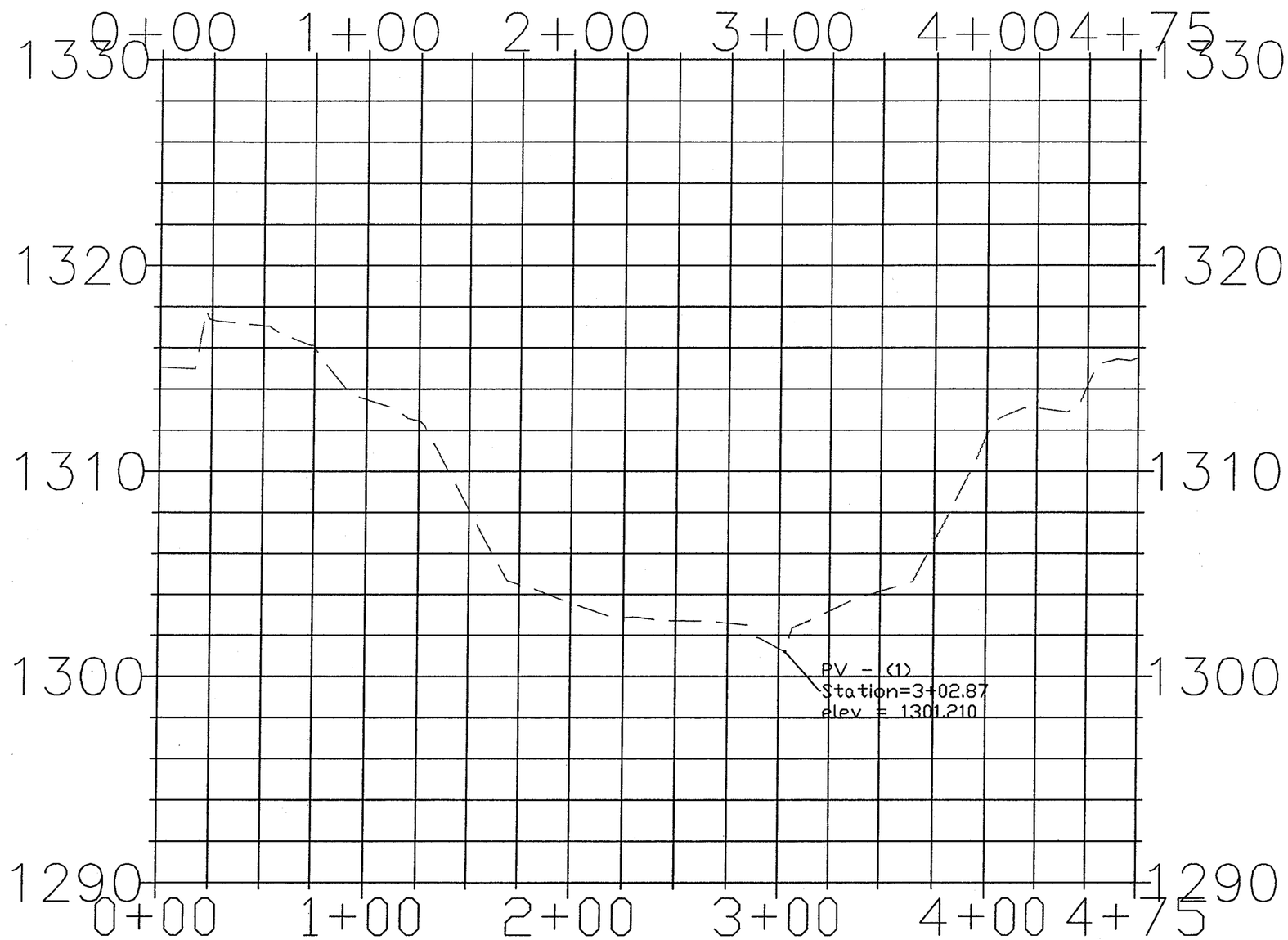

SCALE 1" = 60'

Hydrology

AZTEC
www.aztec.us

Precipitation
ADOT Hydrology Manual

Project:	Higley DB	By:	Sarah Smedley, P.E.
		Date:	1/30/2008
		Project #:	AZE0810

RAINFALL DEPTH-DURATION-FREQUENCY (D-D-F) WORKSHEET
AND INTENSITY-DURATION-FREQUENCY (I-D-F)CURVES

PART A

Determine rainfall depths from the isopluvial maps (Appendix B):

2-year, 6-hour		P2,6'	=	1.09
2-year, 24-hour		P2,24'	=	1.48
100-year, 6-hour		P100,6'	=	2.51
100-year, 24-hour		P100,24'	=	3.46

PART B

Compute the following:

2-year, 1-hour		P2,1'	=	0.7
100-year, 1-hour		P100,1'	=	1.9
2-year, 2-hour		P2,2'	=	0.9
2-year, 3-hour		P2,3'	=	0.9
2-year, 12-hour		P2,12'	=	1.3
100-year, 2-hour		P100,2'	=	2.1
100-year, 3-hour		P100,3'	=	2.2
100-year, 12-hour		P100,12'	=	3.0

Note: 5" denotes 5 minutes, etc.; 1'denotes 1 hour, etc.

PART C

Determine the short-duration rainfall zone **(Figure 1-1):**

Zone = 8

Determine the short-duration rainfall ratios **(Table 1-1):**

Duration (Minutes)	Ratio			
	2-year		100-year	
5	A=	0.34	E=	0.30
10	B=	0.51	F=	0.46
15	C=	0.62	G=	0.59
30	D=	0.82	H=	0.80

Compute the following:

2-year, 5-min		P2,5"	=	0.3
2-year, 10-min		P2,10"	=	0.4
2-year, 15-min		P2,15"	=	0.5
2-year, 30-min		P2,30"	=	0.6
100-year, 5-min		P100,5"	=	0.6
100-year, 10-min		P100,10"	=	0.9
100-year, 15-min		P100, 15"	=	1.1
100-year, 30-min		P100, 30"	=	1.5

Note: 5" denotes 5 minutes, etc.; 1' denotes 1hour, etc.

PART D

For any flood frequency (T-yr) other than 2-year or 100-year calculate the rainfall depth for each rainfall duration (t) by the following equation:

(not printed, see manual)

Where X and Y for a selected frequency (T-yr) are:

Frequency (T-yr)	X	Y
5-year	0.674	0.278
10-year	0.496	0.449
25-year	0.293	0.669
50-year	0.146	0.835
500-year	-0.337	1.381

	Frequency, T-yr				
	5	10	25	50	500
5-min	0.33	0.38	0.45	0.51	0.69
10-min	0.50	0.57	0.69	0.77	1.06
15-min	0.62	0.72	0.87	0.99	1.37
30-min	0.83	0.97	1.18	1.34	1.86
1-hour	1.02	1.21	1.47	1.67	2.33
2-hour	1.16	1.37	1.65	1.87	2.59
3-hour	1.26	1.47	1.77	2.00	2.77
6-hour	1.43	1.67	2.00	2.25	3.10
12-hour	1.70	1.98	2.37	2.68	3.69
24-hour	1.96	2.29	2.75	3.11	4.28

PART E

Depth - Duration - Frequency (DDF)

Rainfall Depth, in inches							
	Frequency, in years						
Duration	2	5	10	25	50	100	500
5-min	0.25	0.33	0.38	0.45	0.51	0.56	0.69
10-min	0.38	0.50	0.57	0.69	0.77	0.86	1.06
15-min	0.46	0.62	0.72	0.87	0.99	1.10	1.37
30-min	0.61	0.83	0.97	1.18	1.34	1.49	1.86
1-hour	0.75	1.02	1.21	1.47	1.67	1.87	2.33
2-hour	0.86	1.16	1.37	1.65	1.87	2.09	2.59
3-hour	0.94	1.26	1.47	1.77	2.00	2.23	2.77
6-hour	1.09	1.43	1.67	2.00	2.25	2.51	3.10
12-hour	1.29	1.70	1.98	2.37	2.68	2.99	3.69
24-hour	1.48	1.96	2.29	2.75	3.11	3.46	4.28

Intensity - Duration - Frequency (IDF)

Rainfall Intensity, in inches per hour								
		Frequency, in years						
Duration	minutes	2	5	10	25	50	100	500
5-min	5	3.04	3.92	4.53	5.39	6.06	6.73	8.27
10-min	10	2.28	2.97	3.45	4.12	4.64	5.16	6.35
15-min	15	1.85	2.47	2.90	3.49	3.95	4.41	5.47
30-min	30	1.22	1.65	1.95	2.36	2.68	2.99	3.72
1-hour	60	0.75	1.02	1.21	1.47	1.67	1.87	2.33
2-hour	120	0.43	0.58	0.68	0.82	0.93	1.04	1.30
3-hour	180	0.31	0.42	0.49	0.59	0.67	0.74	0.92
6-hour	360	0.18	0.24	0.28	0.33	0.38	0.42	0.52
12-hour	720	0.11	0.14	0.16	0.20	0.22	0.25	0.31
24-hour	1440	0.06	0.08	0.10	0.11	0.13	0.14	0.18

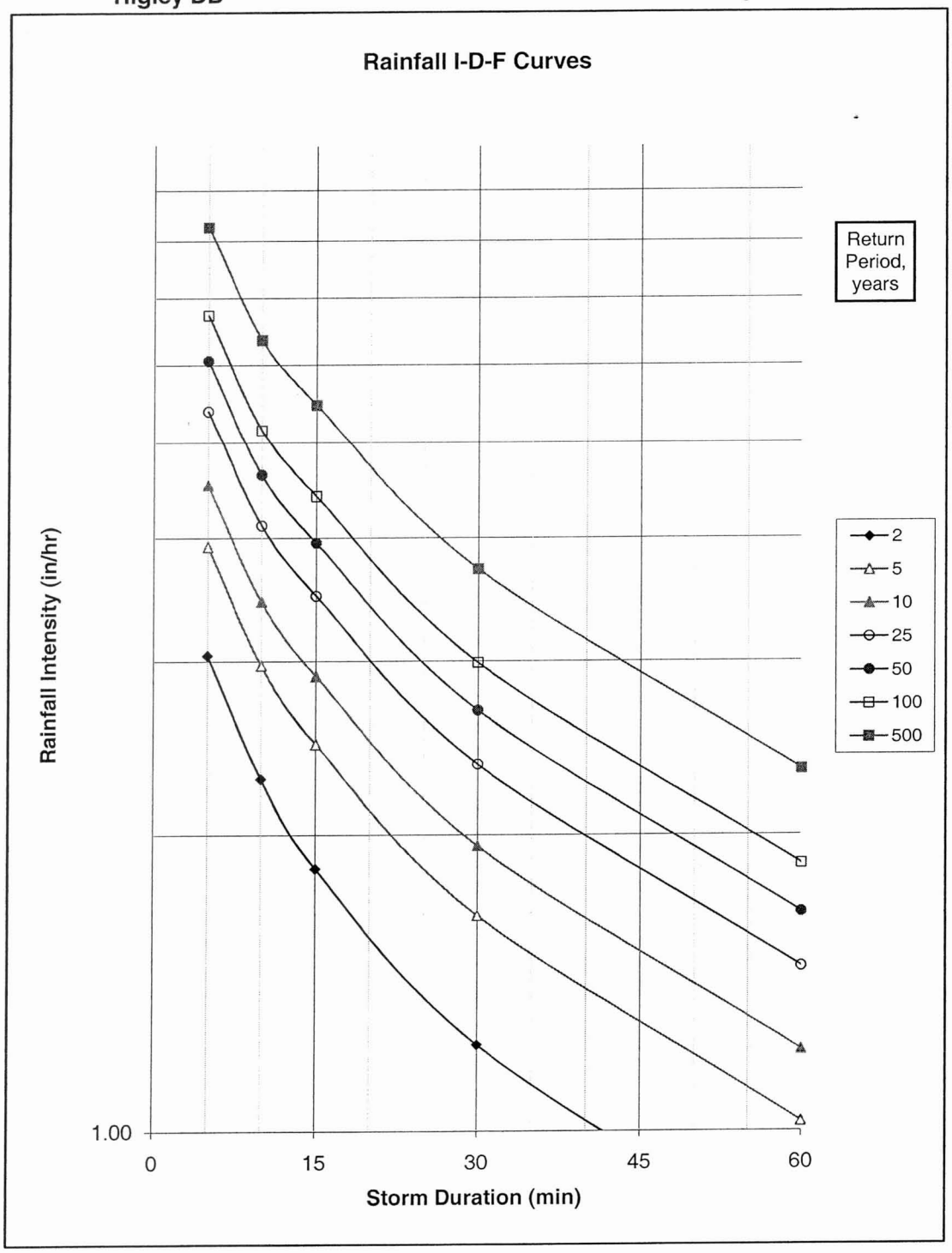
Rainfall I-D-F Curves
Rainfall Intensity (in/hr)
1.00
0
15
30
45
60
Storm Duration (min)
Return Period, years
2
5
10
25
50
100
500

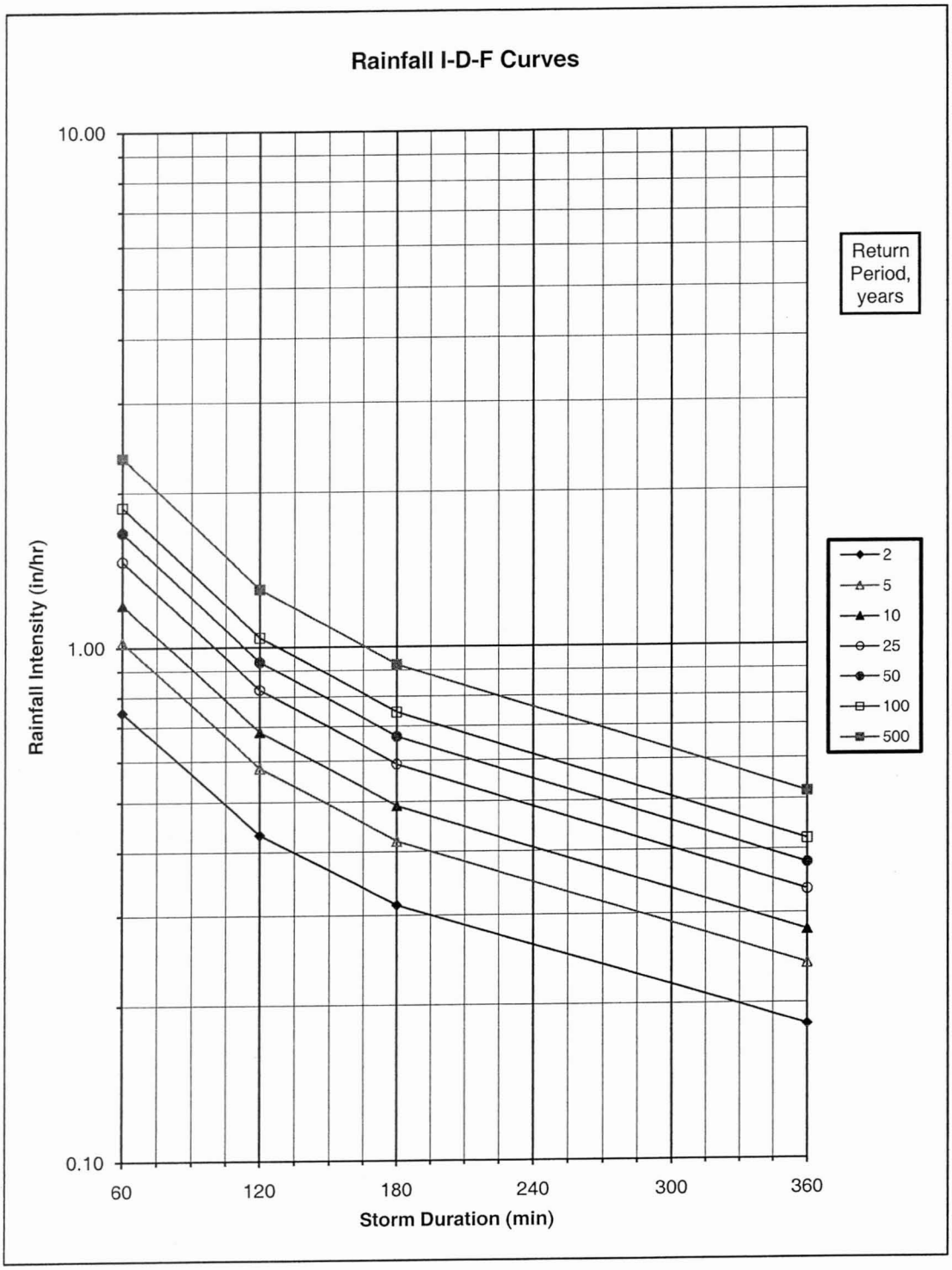
Rainfall I-D-F Curves
10.00
1.00
0.10
Rainfall Intensity (in/hr)
60
120
180
240
300
360
Storm Duration (min)
Return Period, years
2
5
10
25
50
100
500

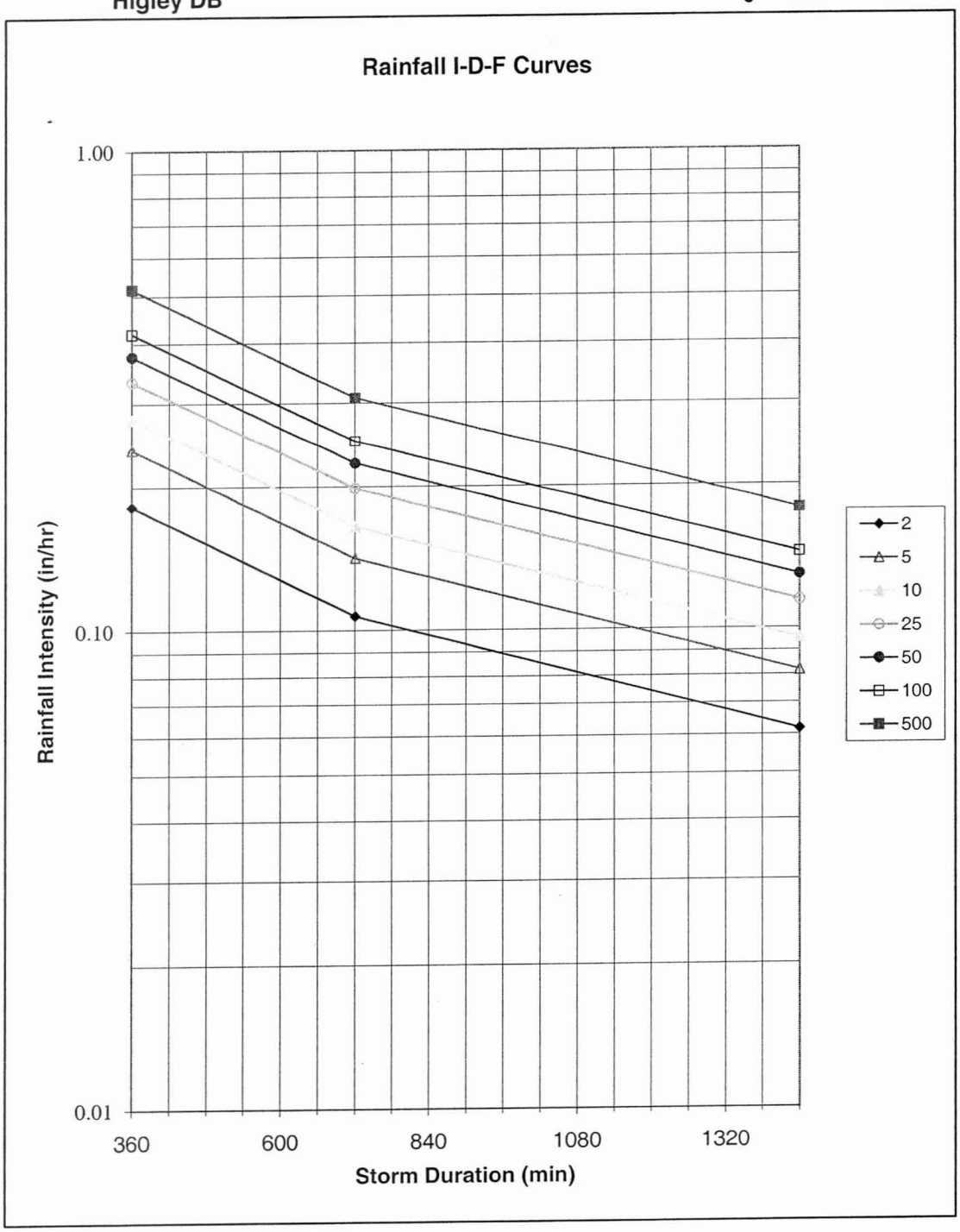
Rainfall I-D-F Curves
1.00
0.10
0.01
Rainfall Intensity (in/hr)
360
600
840
1080
1320
Storm Duration (min)
2
5
10
25
50
100
500

Rainfall Intensities, Inches/Hour						
Time minutes	10-Year Event	25-Year Event	50-Year Event	100-Year Event	500-Year Event	
10	3.45	4.12	4.64	5.16	6.35	ADOT MANUAL
11	3.33	3.98	4.49	5.00	6.17	Interpolated Values
12	3.22	3.86	4.35	4.84	5.98	Interpolated Values
13	3.11	3.73	4.21	4.70	5.81	Interpolated Values
14	3.00	3.61	4.08	4.55	5.63	Interpolated Values
15	2.90	3.49	3.95	4.41	5.47	ADOT MANUAL
16	2.82	3.40	3.85	4.30	5.33	Interpolated Values
17	2.75	3.31	3.75	4.19	5.19	Interpolated Values
18	2.68	3.23	3.66	4.08	5.06	Interpolated Values
19	2.61	3.14	3.56	3.98	4.93	Interpolated Values
20	2.54	3.06	3.47	3.87	4.81	Interpolated Values
21	2.47	2.98	3.38	3.78	4.69	Interpolated Values
22	2.41	2.91	3.29	3.68	4.57	Interpolated Values
23	2.34	2.83	3.21	3.58	4.45	Interpolated Values
24	2.28	2.76	3.13	3.49	4.34	Interpolated Values
25	2.22	2.69	3.05	3.40	4.23	Interpolated Values
26	2.17	2.62	2.97	3.32	4.12	Interpolated Values
27	2.11	2.55	2.89	3.23	4.02	Interpolated Values
28	2.05	2.49	2.82	3.15	3.91	Interpolated Values
29	2.00	2.42	2.75	3.07	3.81	Interpolated Values
30	1.95	2.36	2.68	2.99	3.72	ADOT MANUAL
31	1.92	2.32	2.63	2.94	3.66	Interpolated Values
32	1.89	2.29	2.59	2.90	3.60	Interpolated Values
33	1.86	2.25	2.55	2.85	3.55	Interpolated Values
34	1.83	2.21	2.51	2.81	3.49	Interpolated Values
35	1.80	2.18	2.47	2.76	3.44	Interpolated Values
36	1.77	2.15	2.43	2.72	3.39	Interpolated Values
37	1.74	2.11	2.40	2.68	3.33	Interpolated Values
38	1.72	2.08	2.36	2.64	3.28	Interpolated Values
39	1.69	2.05	2.32	2.60	3.23	Interpolated Values
40	1.66	2.01	2.29	2.56	3.18	Interpolated Values
41	1.64	1.98	2.25	2.52	3.13	Interpolated Values
42	1.61	1.95	2.22	2.48	3.08	Interpolated Values
43	1.58	1.92	2.18	2.44	3.04	Interpolated Values
44	1.56	1.89	2.15	2.40	2.99	Interpolated Values
45	1.53	1.86	2.11	2.36	2.94	Interpolated Values
46	1.51	1.83	2.08	2.33	2.90	Interpolated Values
47	1.49	1.80	2.05	2.29	2.85	Interpolated Values
48	1.46	1.77	2.02	2.26	2.81	Interpolated Values
49	1.44	1.75	1.98	2.22	2.76	Interpolated Values
50	1.42	1.72	1.95	2.19	2.72	Interpolated Values
51	1.39	1.69	1.92	2.15	2.68	Interpolated Values
52	1.37	1.67	1.89	2.12	2.64	Interpolated Values
53	1.35	1.64	1.86	2.09	2.60	Interpolated Values
54	1.33	1.61	1.83	2.05	2.56	Interpolated Values
55	1.31	1.59	1.81	2.02	2.52	Interpolated Values
56	1.29	1.56	1.78	1.99	2.48	Interpolated Values
57	1.27	1.54	1.75	1.96	2.44	Interpolated Values
58	1.25	1.52	1.72	1.93	2.40	Interpolated Values
59	1.23	1.49	1.70	1.90	2.37	Interpolated Values
60	1.21	1.47	1.67	1.87	2.33	ADOT MANUAL

Note: Interpolated Values as determined between the ADOT Manual Values
The precip values were taken to the log(10) prior to interpolation.
The minute values remained the same for interpolation.

Project Name:	**Higley Rd DB**	Date:	**6/13/2008**
Subject:	**10-, 50-, & 100-Year Peak Discharge**	Computed By:	**SSS**
Location:	**Town of Gilbert**	Checked By:	**RHF**

AZTEC www.aztec.us

Drainage Area DA01

10-yr, 10 min Intensity =	3.45	in/hr
Hydrologic Zone =	8	
Length of Longest Flowpath =	854	feet
	0.16	miles
Upper Elevation=	1318.44	feet
Lower Elevation=	1311.41	feet
Slope of Longest Flowpath =	43.46	ft/mi
Kb =	0.0395	

$Tc=11.4L^{0.50}K_b^{0.52}S^{-0.31}I^{-0.38}$

Trials **10-Year Event**

Tc (min)	I(in/hr)	Calculated Tc (min)	
9	3.66	9.7	
10	3.45	9.9	OK

Minimum 10 Min. Tc

Trials **50-Year Event**

Tc (min)	I(in/hr)	Calculated Tc (min)	
9	4.92	8.7	
10	4.64	8.9	OK
11	4.49	9.0	

Minimum 10 Min. Tc

Trials **100-Year Event**

Tc (min)	I(in/hr)	Calculated Tc (min)	
7	6.10	8.0	
8	5.79	8.2	
9	5.47	8.3	
10	5.16	8.5	OK

Minimum 10 Min. Tc

Denotes information that needs to be entered.

Q=CIA **10-Year Event**

$C_{10} = C_{50}/1.20$

C_{RD}=	0.75	
C_D=	0.58	
$C_{Composite}$=	0.73	
I=	3.45	in/hr
Area (Roadway) =	1.03	acres
Area (Desert LS)=	0.16	acres
Total Area=	1.19	acres

10-Year,1-Hour Storm Event= **3.0** cfs

Q=CIA **50-Year Event**

C_{50} Per Town of Gilbert Engineering Standards

C_{RD}=	0.90	
C_D=	0.70	
$C_{Composite}$=	0.87	
I=	4.64	in/hr
Area (Roadway) =	1.03	acres
Area (Desert LS)=	0.16	acres
Total Area=	1.19	acres

50-Year,1-Hour Storm Event= **4.8** cfs

Q=CIA **100-Year Event**

$C_{100} = 1.25*C_{10}$

C_{RD}=	0.94	
C_D=	0.73	
$C_{Composite}$=	0.91	
I=	5.16	in/hr
Area (Roadway) =	1.03	acres
Area (Desert LS)=	0.16	acres
Total Area=	1.19	acres

100-Year,1-Hour Storm Event= **5.6** cfs

Project Name:	**Higley Road DB**	Date:	**6/13/2008**
Subject:	**10-, 50-, & 100-Year Peak Discharge**	Computed By:	**SSS**
Location:	**Town of Gilbert**	Checked By:	**RHF**

AZTEC www.aztec.us

Drainage Area DA02

10-yr, 10 min Intensity =	3.45	in/hr
Hydrologic Zone =	8	
Length of Longest Flowpath =	888	feet
	0.17	miles
Upper Elevation=	1312.43	feet
Lower Elevation=	1308.87	feet
Slope of Longest Flowpath =	21.17	ft/mi
Kb =	0.0391	

$Tc=11.4L^{0.50}K_b^{0.52}S^{-0.31}I^{-0.38}$

Trials **10-Year Event**

Tc (min)	I(in/hr)	Calculated Tc (min)	
5	4.53	11.4	
13	3.11	13.1	OK

Minimum 10 Min. Tc

Trials **50-Year Event**

Tc (min)	I(in/hr)	Calculated Tc (min)	
5	6.06	10.2	
12	4.35	11.5	OK

Minimum 10 Min. Tc

Trials **100-Year Event**

Tc (min)	I(in/hr)	Calculated Tc (min)	
5	6.73	9.8	
11	5.00	10.9	OK

Minimum 10 Min. Tc

Denotes information that needs to be entered.

Q=CIA **10-Year Event**

$C_{10} = C_{50}/1.20$

C_{RD}=	0.75	
C_D=	0.58	
$C_{Composite}$=	0.69	
I=	3.11	in/hr
Area (Roadway) =	0.93	acres
Area (Desert LS)=	0.46	acres
Total Area=	1.39	acres

10-Year,1-Hour Storm Event= **3.0** cfs

Q=CIA **50-Year Event**

C_{50} Per Town of Gilbert Engineering Standards

C_{RD}=	0.90	
C_D=	0.70	
$C_{Composite}$=	0.83	
I=	4.35	in/hr
Area (Roadway) =	0.93	acres
Area (Desert LS)=	0.46	acres
Total Area=	1.39	acres

50-Year,1-Hour Storm Event= **5.0** cfs

Q=CIA **100-Year Event**

$C_{100} = 1.25*C_{10}$

C_{RD}=	0.94	
C_D=	0.73	
$C_{Composite}$=	0.87	
I=	5.00	in/hr
Area (Roadway) =	0.93	acres
Area (Desert LS)=	0.46	acres
Total Area=	1.39	acres

100-Year,1-Hour Storm Event= **6.0** cfs

Project Name:	Higley Road DB	Date:	6/13/2008
Subject:	10-, 50-, & 100-Year Peak Discharge	Computed By:	SSS
Location:	Town of Gilbert	Checked By:	RHF

AZTEC www.aztec.us

AZE0810

Drainage Area DA03

10-yr, 10 min Intensity =	3.45	in/hr
Hydrologic Zone =	8	
Length of Longest Flowpath =	751	feet
	0.14	miles
Upper Elevation=	1318.25	feet
Lower Elevation=	1311.41	feet
Slope of Longest Flowpath =	48.09	ft/mi
Kb =	0.0399	

$Tc=11.4L^{0.50}K_b^{0.52}S^{-0.31}I^{-0.38}$

Trials **10-Year Event**

Tc (min)	I(in/hr)	Calculated Tc (min)	
9	3.66	8.9	
10	3.45	9.1	OK

Minimum 10 min. Tc

Trials **50-Year Event**

Tc (min)	I(in/hr)	Calculated Tc (min)	
8	5.21	7.8	
10	4.64	8.1	OK

Minimum 10 min. Tc

Trials **100-Year Event**

Tc (min)	I(in/hr)	Calculated Tc (min)	
7	6.10	7.3	
10	5.16	7.8	OK

Minimum 10 min. Tc

Denotes information that needs to be entered.

Q=CIA **10-Year Event**

$C_{10} = C_{50}/1.20$

C_{RD}=	0.75	
C_D=	0.58	
$C_{Composite}$=	0.72	
I=	3.45	in/hr
Area (Roadway) =	0.82	acres
Area (Desert LS)=	0.20	acres
Total Area=	1.02	acres

10-Year,1-Hour Storm Event= **2.5** cfs

Q=CIA **50-Year Event**

C_{50} Per Town of Gilbert Engineering Standards

C_{RD}=	0.90	
C_D=	0.70	
$C_{Composite}$=	0.86	
I=	4.64	in/hr
Area (Roadway) =	0.82	acres
Area (Desert LS)=	0.20	acres
Total Area=	1.02	acres

50-Year,1-Hour Storm Event= **4.1** cfs

Q=CIA **100-Year Event**

$C_{100} = 1.25*C_{10}$

C_{RD}=	0.94	
C_D=	0.73	
$C_{Composite}$=	0.90	
I=	5.16	in/hr
Area (Roadway) =	0.82	acres
Area (Desert LS)=	0.20	acres
Total Area=	1.02	acres

100-Year,1-Hour Storm Event= **4.7** cfs

Project Name:	**Higley Road DB**	Date:	**6/13/2008**
Subject:	**10-, 50-, & 100-Year Peak Discharge**	Computed By:	**SSS**
Location:	**Town of Gilbert**	Checked By:	**RHF**

AZTEC www.aztec.us

Drainage Area DA04

10-yr, 10 min Intensity =	3.45	in/hr
Hydrologic Zone =	8	
Length of Longest Flowpath =	235	feet
	0.04	miles
Upper Elevation=	1318.90	feet
Lower Elevation=	1317.16	feet
Slope of Longest Flowpath =	39.09	ft/mi
Kb =	0.0437	

$Tc=11.4L^{0.50}K_b^{0.52}S^{-0.31}I^{-0.38}$

Trials **10-Year Event**

Tc (min)	I(in/hr)	Calculated Tc (min)	
5	4.53	5.1	
6	4.31	5.2	
10	3.45	5.7	OK

Trials **50-Year Event**

Tc (min)	I(in/hr)	Calculated Tc (min)	
5	6.06	4.6	
6	5.78	4.7	
10	4.64	5.1	OK

Trials **100-Year Event**

Tc (min)	I(in/hr)	Calculated Tc (min)	
5	6.73	4.4	
6	6.41	4.5	
10	5.16	4.9	OK

Denotes information that needs to be entered.

Q=CIA **10-Year Event**

$C_{10} = C_{50}/1.20$

C_{RD}=	0.75	
C_D=	0.58	
$C_{Composite}$=	0.75	
I=	3.45	in/hr
Area (Roadway) =	0.26	acres
Area (Desert LS)=	0.00	acres
Total Area=	0.26	acres

10-Year,1-Hour Storm Event= **0.7** cfs

Q=CIA **50-Year Event**

C_{50} Per Town of Gilbert Engineering Standards

C_{RD}=	0.90	
C_D=	0.70	
$C_{Composite}$=	0.90	
I=	4.64	in/hr
Area (Roadway) =	0.26	acres
Area (Desert LS)=	0.00	acres
Total Area=	0.26	acres

50-Year,1-Hour Storm Event= **1.1** cfs

Q=CIA **100-Year Event**

$C_{100} = 1.25*C_{10}$

C_{RD}=	0.94	
C_D=	0.73	
$C_{Composite}$=	0.94	
I=	5.16	in/hr
Area (Roadway) =	0.26	acres
Area (Desert LS)=	0.00	acres
Total Area=	0.26	acres

100-Year,1-Hour Storm Event= **1.3** cfs

Project Name:	**Higley Road DB**	Date:	**6/13/2008**
Subject:	**10-, 50-, & 100-Year Peak Discharge**	Computed By:	**SSS**
Location:	**Town of Gilbert**	Checked By:	**RHF**

AZTEC www.aztec.us

Drainage Area DA05

10-yr, 10 min Intensity =	3.45	in/hr
Hydrologic Zone =	8	
Length of Longest Flowpath =	248	feet
	0.05	miles
Upper Elevation=	1318.44	feet
Lower Elevation=	1316.20	feet
Slope of Longest Flowpath =	47.69	ft/mi
Kb =	0.0410	

$Tc=11.4L^{0.50}K_b^{0.52}S^{-0.31}I^{-0.38}$

Trials **10-Year Event**

Tc (min)	I(in/hr)	Calculated Tc (min)	
5	4.53	4.8	
10	3.45	5.3	OK

Trials **50-Year Event**

Tc (min)	I(in/hr)	Calculated Tc (min)	
5	6.06	4.3	
10	4.64	4.7	OK

Trials **100-Year Event**

Tc (min)	I(in/hr)	Calculated Tc (min)	
5	6.73	4.1	
10	5.16	4.6	OK

Denotes information that needs to be entered.

Q=CIA **10-Year Event**

$C_{10} = C_{50}/1.20$

C_{RD}=	0.75	
C_D=	0.58	
$C_{Composite}$=	0.75	
I=	3.45	in/hr
Area (Roadway) =	0.69	acres
Area (Desert LS)=	0.00	acres
Total Area=	0.69	acres

10-Year,1-Hour Storm Event= **1.8** cfs

Q=CIA **50-Year Event**

C_{50} Per Town of Gilbert Engineering Standards

C_{RD}=	0.90	
C_D=	0.70	
$C_{Composite}$=	0.90	
I=	4.64	in/hr
Area (Roadway) =	0.69	acres
Area (Desert LS)=	0.00	acres
Total Area=	0.69	acres

50-Year,1-Hour Storm Event= **2.9** cfs

Q=CIA **100-Year Event**

$C_{100} = 1.25*C_{10}$

C_{RD}=	0.94	
C_D=	0.73	
$C_{Composite}$=	0.94	
I=	5.16	in/hr
Area (Roadway) =	0.69	acres
Area (Desert LS)=	0.00	acres
Total Area=	0.69	acres

100-Year,1-Hour Storm Event= **3.3** cfs

Hydraulics

Worksheet for CB-01 10-yr COMBO

Project Description

Solve For	Efficiency

Input Data

Discharge	3.00	ft^3/s
Slope	0.00400	ft/ft
Gutter Width	2.50	ft
Gutter Cross Slope	0.06	ft/ft
Road Cross Slope	0.03	ft/ft
Roughness Coefficient	0.016	
Local Depression	2.00	in
Local Depression Width	2.50	ft
Grate Width	1.83	ft
Grate Length	3.00	ft
Grate Type	P-50 mm x 100 mm (P-1-7/8"-4")	
Clogging	0.00	%
Curb Opening Length	4.80	ft

Options

Calculation Option	Use Both
Grate Flow Option	Exclude None

Results

Efficiency	80.61	%
Intercepted Flow	2.42	ft^3/s
Bypass Flow	0.58	ft^3/s
Spread	10.62	ft
Depth	0.35	ft
Flow Area	1.51	ft^2
Gutter Depression	0.08	ft
Total Depression	0.25	ft
Velocity	1.98	ft/s
Splash Over Velocity	6.13	ft/s
Frontal Flow Factor	1.00	
Side Flow Factor	0.38	
Grate Flow Ratio	0.46	
Equivalent Cross Slope	0.08340	ft/ft
Active Grate Length	3.00	ft
Length Factor	0.19	
Total Interception Length	9.64	ft

Worksheet for CB-01 10-yr COMBO

Messages

Notes	Provide MAG STD. DET. 533 M1, L=6. (APPLYING 20% CLOGGING FACTOR, EFFECTIVE INTERCEPTION LENGTH = 4.8')

Worksheet for Gutter DA-01 10-yr

Project Description

Solve For	Spread

Input Data

Channel Slope	0.00400	ft/ft
Discharge	3.00	ft^3/s
Gutter Width	1.42	ft
Gutter Cross Slope	0.06	ft/ft
Road Cross Slope	0.03	ft/ft
Roughness Coefficient	0.016	

Results

Spread	11.05	ft
Flow Area	1.56	ft^2
Depth	0.32	ft
Gutter Depression	0.05	ft
Velocity	1.92	ft/s

Worksheet for CB-02 10-YR SCUPPER

Project Description

Solve For	Efficiency

Input Data

Discharge	3.58	ft^3/s
Slope	0.00280	ft/ft
Gutter Width	1.42	ft
Gutter Cross Slope	0.06	ft/ft
Road Cross Slope	0.03	ft/ft
Roughness Coefficient	0.016	
Curb Opening Length	6.40	ft
Local Depression	2.00	in
Local Depression Width	1.42	ft

Results

Efficiency	82.30	%
Intercepted Flow	2.95	ft^3/s
Bypass Flow	0.63	ft^3/s
Spread	12.68	ft
Depth	0.36	ft
Flow Area	2.04	ft^2
Gutter Depression	0.05	ft
Total Depression	0.21	ft
Velocity	1.75	ft/s
Equivalent Cross Slope	0.07002	ft/ft
Length Factor	0.62	
Total Interception Length	10.36	ft

Messages

Notes	Provide MAG STD. DET. 206, L=8. (APPLYING 20% CLOGGING FACTOR, EFFECTIVE CURB OPENING LENGTH = 6.4')

Worksheet for Gutter DA-02 10-yr

Project Description

Solve For	Spread

Input Data

Channel Slope	0.00280	ft/ft
Discharge	3.48	ft^3/s
Gutter Width	1.42	ft
Gutter Cross Slope	0.06	ft/ft
Road Cross Slope	0.03	ft/ft
Roughness Coefficient	0.016	

Results

Spread	12.54	ft
Flow Area	2.00	ft^2
Depth	0.36	ft
Gutter Depression	0.05	ft
Velocity	1.74	ft/s

Worksheet for CB-03 10-yr COMBO

Project Description

Solve For	Efficiency

Input Data

Discharge	2.50	ft^3/s
Slope	0.00400	ft/ft
Gutter Width	2.50	ft
Gutter Cross Slope	0.06	ft/ft
Road Cross Slope	0.03	ft/ft
Roughness Coefficient	0.016	
Local Depression	2.00	in
Local Depression Width	2.50	ft
Grate Width	1.83	ft
Grate Length	3.00	ft
Grate Type	P-50 mm x 100 mm (P-1-7/8"-4")	
Clogging	0.00	%
Curb Opening Length	4.80	ft

Options

Calculation Option	Use Both
Grate Flow Option	Exclude None

Results

Efficiency	83.70	%
Intercepted Flow	2.09	ft^3/s
Bypass Flow	0.41	ft^3/s
Spread	9.83	ft
Depth	0.33	ft
Flow Area	1.31	ft^2
Gutter Depression	0.08	ft
Total Depression	0.25	ft
Velocity	1.90	ft/s
Splash Over Velocity	6.13	ft/s
Frontal Flow Factor	1.00	
Side Flow Factor	0.40	
Grate Flow Ratio	0.49	
Equivalent Cross Slope	0.08705	ft/ft
Active Grate Length	3.00	ft
Length Factor	0.21	
Total Interception Length	8.70	ft

Worksheet for CB-03 10-yr COMBO

Messages

Notes	Provide MAG STD. DET. 533 M1, L=6. (APPLYING 20% CLOGGING FACTOR, EFFECTIVE INTERCEPTION LENGTH = 4.8')

Worksheet for Gutter DA-03 10-yr

Project Description

Solve For	Spread

Input Data

Channel Slope	0.00400	ft/ft
Discharge	2.50	ft^3/s
Gutter Width	1.42	ft
Gutter Cross Slope	0.06	ft/ft
Road Cross Slope	0.03	ft/ft
Roughness Coefficient	0.016	

Results

Spread	10.30	ft
Flow Area	1.36	ft^2
Depth	0.31	ft
Gutter Depression	0.05	ft
Velocity	1.84	ft/s

Worksheet for CB-04 10-YR no grate

Project Description

Solve For	Efficiency

Input Data

Discharge	0.70	ft^3/s
Slope	0.00678	ft/ft
Gutter Width	1.42	ft
Gutter Cross Slope	0.06	ft/ft
Road Cross Slope	0.03	ft/ft
Roughness Coefficient	0.016	
Curb Opening Length	4.40	ft
Local Depression	2.00	in
Local Depression Width	1.42	ft

Results

Efficiency	98.11	%
Intercepted Flow	0.69	ft^3/s
Bypass Flow	0.01	ft^3/s
Spread	5.52	ft
Depth	0.19	ft
Flow Area	0.41	ft^2
Gutter Depression	0.05	ft
Total Depression	0.21	ft
Velocity	1.69	ft/s
Equivalent Cross Slope	0.11921	ft/ft
Length Factor	0.89	
Total Interception Length	4.95	ft

Messages

Notes	Existing MAG STD. DET. 531, (APPLYING 20% CLOGGING FACTOR, EFFECTIVE INTERCEPTION LENGTH = 4.4')

Worksheet for CB-05 10-yr COMBO

Project Description

Solve For	Spread

Input Data

Discharge	2.04	ft^3/s
Gutter Width	2.50	ft
Gutter Cross Slope	0.06	ft/ft
Road Cross Slope	0.03	ft/ft
Local Depression	2.00	in
Local Depression Width	2.50	ft
Grate Width	1.83	ft
Grate Length	3.00	ft
Grate Type	P-50 mm (P-1-7/8")	
Clogging	50.00	%
Curb Opening Length	2.40	ft
Opening Height	0.50	ft
Curb Throat Type	Horizontal	
Throat Incline Angle	90.00	degrees

Options

Calculation Option	Use Both

Results

Spread	5.50	ft
Depth	0.22	ft
Gutter Depression	0.09	ft
Total Depression	0.25	ft
Open Grate Area	2.47	ft^2
Active Grate Weir Length	4.83	ft

Messages

Notes	Provide MAG STD. DET. 533 M1, L=0.

Worksheet for Gutter DA-05 10-yr

Project Description

Solve For	Spread

Input Data

Channel Slope	0.01100	ft/ft
Discharge	1.80	ft^3/s
Gutter Width	1.42	ft
Gutter Cross Slope	0.06	ft/ft
Road Cross Slope	0.03	ft/ft
Roughness Coefficient	0.016	

Results

Spread	7.39	ft
Flow Area	0.72	ft^2
Depth	0.23	ft
Gutter Depression	0.05	ft
Velocity	2.51	ft/s

Appendix C:

Retention Calculations

AZTEC ENGINEERING
4561 E. McDowell Road
Phoenix, AZ 85008-4505
Phone (602) 454-0402
Fax (602) 454-0403

Project: Higley DB
Project No: AZF 0810
Computed by: SSS
Date: 08/05/08
Checked by: RHF
Date: 8-15-08
Sheet Name:
Sheet: Of:

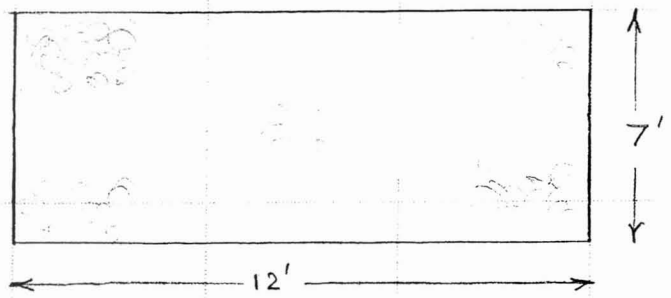

$V_R = 15209' + 6077'$
$= 21286'$ CF

$V_R' = V_{pipe}' + V_{Trench}' + 111.47'$ [111.47 represents the length of pipe between trenches]

$= V_{pipe}' + 0.4[L \times 12 \times 7 - (V_{pipe})]' + 111.47'$

$= V_{pipe}' - 0.4 V_{pipe}' + 33.6L' + 111.47'$

$= 0.6 V_{pipe}' + 33.6L' + 111.47'$

$= 0.6\left(L \times \frac{3.14 \times (1)^2}{4}\right)' + 33.6L' + 111.47'$

$= 0.471L' + 33.6L' + 111.47'$

$21286' = 34.071L' + 111.47'$

$L = \frac{21286' - 111.47'}{34.071}$

$= 621.148 \simeq 622'$.

Site: Higley DB
Location: Higley Road
Description: Onsite Retention
Reference: Town of Gilbert Public Works and Engineering Standards and Details

AZTEC
www.aztec.us

Drainage Area DA01

Ground Cover	A (Acres)	C (10 yr)	C x A
Roadway	1.03	0.75	0.77
Desert Landscape	0.16	0.58	0.09
Totals	1.19		0.87

Drainage Area DA02

Ground Cover	A (Acres)	C (10 yr)	C x A
Roadway	0.93	0.75	0.70
Desert Landscape	0.46	0.58	0.27
Totals	1.39		0.96

Volume Required:

10-Year, 24-Hour Rainfall Depth (D)	2.29	Inches
Total Area =	112,385	ft^2
Total Area =	2.58	acre
C Value =	0.71	weighted runoff coefficient

V_{req} = DAC

V_{req} = **15,209** cu.ft.
V_{req} = **0.35** acre-feet

Site: Higley DB
Location: Higley Road
Description: Onsite Retention
Reference: Town of Gilbert Public Works and Engineering Standards and Details

AZTEC
www.aztec.us

Drainage Area DA-03

Ground Cover	A (Acres)	C (10 yr)	C x A
Roadway	0.82	0.75	0.62
Desert Landscape	0.20	0.58	0.12
Totals	1.02		0.73

10-Year, 24-Hour Rainfall Depth (D)	2.29	Inches
Total Area =	44,431	ft^2
Total Area =	1.02	acre
C Value =	0.72	weighted runoff coefficient

Volume Required:

$V_{req} = DAC$

V_{req} =	**6,077**	cu.ft.
V_{req} =	**0.14**	acre-feet

Inlet Analysis for Interception and Carry-over flows													
Location Name	Inlet Type	Grate	Grate Dimensions	Wing (L) / Scupper Length	Length After 20% Clogging	Inlet Type	Spread	Carry-over from	Upstream Qb (cfs)	Q Generated (cfs)	Qt (cfs)	Qi (cfs)	Qb (cfs)
CB-01	MAG 533	P-1-7/8x4	1.83'x3'	6	4.80	Continuous	10.62	None	0.00	3.00	3.00	2.42	0.58
CB-02	MAG 206	None	None	8	6.40	Continuous	12.68	CB-01	0.58	3.00	3.58	2.95	0.63
CB-03	MAG 533	P-1-7/8x4	1.83'x3'	6	4.80	Continuous	9.83	None	0.00	2.50	2.50	2.09	0.41
CB-04	Ex. MAG 531	None	None	5.5	4.40	Continuous	5.52	None	0.00	0.70	0.70	0.69	0.01
CB-05	MAG 533	P-1-7/8x4	1.83'x3'	0	2.40	Sump	5.50	CB-04	0.01	1.80	1.81	1.81	0.00