Structural Evaluation for 100-yr Scour Event of Existing South Central Avenue Bridge Phoenix Rio Salado Project

Property of
Flood Control District of MC Library
2801 West Durango
Phoenix, AZ 85009

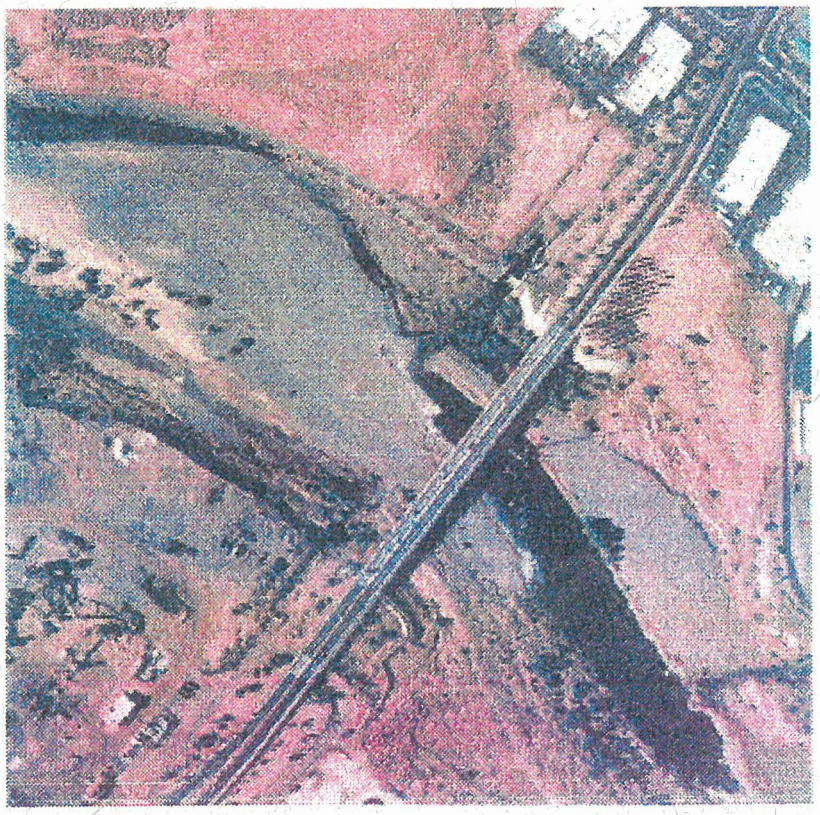

City of Phoenix

U.S. Army Corps Of Engineers
Los Angeles District

WEST CONSULTANTS, INC.

Submitted by: T·Y·LIN INTERNATIONAL

January 28, 2000

WEST CONSULTANTS, INC.

4500 South Lakeshore Drive, Suite 210
Tempe, Arizona 85282-7054
(480) 345-2155 phone (480) 345-2156 fax

LETTER OF TRANSMITTAL

JOB NO.: 250A02	DATE: 2/15/00
ATTENTION:	
Jatin Desai	
Re.:	
Phoenix Rio Salado Grade Control Structure at Central Ave.	

U.S. Army Corps of Engineers
911 Wilshire Blvd., Design Section A
Los Angeles, CA 90017

GENTLEMEN:

WE ARE SENDING YOU

- [X] Enclosed
- [ ] Under Separate Cover
- [ ] Drawings
- [ ] Prints
- [X] Plans
- [ ] Change order
- [ ] Copy of Letter
- [ ] Samples

Other: Reports

COPIES	DATE	NO.	DESCRIPTION
2	Feb-00		99% Plans of Central Avenue Grade Control Structure and Aprons
2	Feb-00		Structural Evaluation for 100-yr Scour Event of Existing Central Ave. Bridge

THESE ARE TRANSMITTED as checked below:

- [ ] For approval
- [ ] For your use
- [ ] As requested
- [X] For review & comment
- [ ]
- [ ] Approved as submitted
- [ ] Approved as noted
- [ ] Please return
- [ ] Resubmit ___ copies for approval
- [ ] Submit ___ copies for distribution
- [ ] Return ___ corrected prints

FLOOD CONTROL DISTRICT
RECEIVED
FEB 15 2000

CHENG	P & PM
PIO	REG
ADMIN	PWLMGT
FINANCE	FILE
O & M	
ENGR	
REMARKS	JSR

Remarks:

COPY TO Walt Kinsler, City of Phoenix - 1 plan set, 1 report
Don Rerick, FCD - 1 plan set, 1 report

SIGNED: Dennis L. Richards
Dennis L. Richards

Structural Evaluation for 100-yr Scour Event of Existing South Central Avenue Bridge Phoenix Rio Salado Project

Prepared for
U.S. Army Corps of Engineers
Los Angeles District

Prepared by
T.Y. Lin International, Inc.
1270 E. Broadway, Suite 122
Tempe, Arizona 85282

Contract:
DACW09-97-D-0022

January 28, 2000

Registered Professional Engineer (Civil)
CERTIFICATE NO.
33653
HELVETHIA M.
PEREZ-DURAN
Date Signed 1/28/00
ARIZONA U.S.A.

T·Y·LIN INTERNATIONAL

TABLE OF CONTENTS

1.0 EXECUTIVE SUMMARY 1

2.0 INTRODUCTION 2

3.0 BRIDGE DESCRIPTION 2

4.0 SUMMARY OF ANALYSIS..... 4

APPENDIX A - AGRA EARTH & ENVIRONMENTAL, INC - SOIL REPORT

APPENDIX B - SOUTH CENTRAL AVENUE BRIDGE CALCULATIONS

TABLE OF CONTENTS

1.0 EXECUTIVE SUMMARY 1

2.0 INTRODUCTION 2

3.0 BRIDGE DESCRIPTION 2

4.0 SUMMARY OF ANALYSIS 4

APPENDIX - SOUTH CENTRAL AVENUE BRIDGE CALCULATIONS

1.0 EXECUTIVE SUMMARY

This structural evaluation of the ***South Central Avenue Bridge*** is an addendum of the final scour evaluation performed to determine if the bridge is compromised by the proposed low flow channel condition on a 100-year event with a scour retrofit measure.

By examination, the elevation of maximum scour from the proposed low flow channel modifications for ***South Central Avenue Bridge*** is more than three feet below the bottom of footing elevation. Consequently, this structure has been recommended for retrofit. The retrofit measure proposed is a scour countermeasure for the structure. This retrofit recommendation provides scour protection for the pier footings thereby, ensuring the integrity of the structure in accordance to Arizona Department of Transportation (ADOT) standards.

The scour countermeasure is a grade control structure located immediately downstream of Central Avenue with a soil-cement apron within the low flow channel and extending through the bridge. In order to proceed with the design of Grade Control Structure (GCS) and channel lining, there is a need for a detailed and thorough hydraulic investigation for the proposed retrofit conditions of the ***South Central Avenue Bridge*** over the Salt River.

The foundations for the ***South Central Avenue Bridge*** are more than adequate to resist the stream forces associated with the 100-year peak event with a scour retrofit measure. The results indicate that the bridge stability is acceptable; therefore, the retrofit measurements as described above should be provided for this bridge structure.

2.0 INTRODUCTION

The following report summarizes the impact of the 100-year flow event on ***South Central Avenue*** structure as a result of the proposed channel conditions. This report only examines the Low Flow Channel (LFC) invert conditions. Results of the bridge scour analysis conducted by West Consultants, Inc estimates that the elevation of the Low Flow Channel Invert for the ***South Central Avenue Bridge*** is 1025.84 feet.

3.0 BRIDGE DESCRIPTION

As-built plans for the ***South Central Avenue Bridge*** were obtained and computer models generated based upon the information contained in these documents. Below is a brief description of the structure.

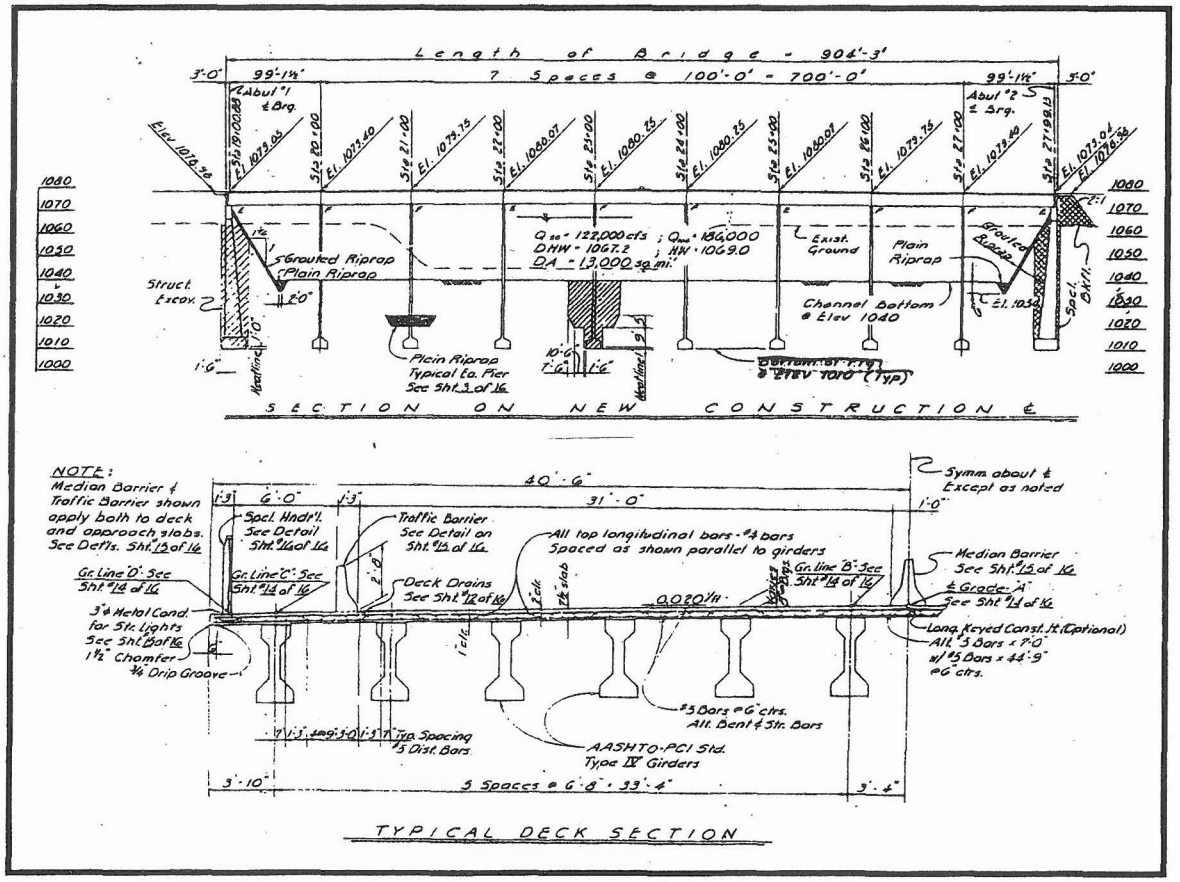

Elevation and Typical Section – South Central Avenue Bridge

Built in 1975, the South Central Avenue Bridge is a nine-span structure approximately 903-feet long and 81-feet wide.

The precast, prestressed concrete girders with cast-in-place concrete deck are supported on tapered, 2'-6" round-nose piers and spill-through, seat-type abutments. Both the abutments and the piers are founded on spread footings approximately thirty feet below the channel bottom (Elevation 1010). The elliptical-shaped dikes around the abutments are paved with 18 inch of grouted riprap to a depth of six feet below the channel bed. A buried, five-foot layer of plain riprap lies just above each pier footing.

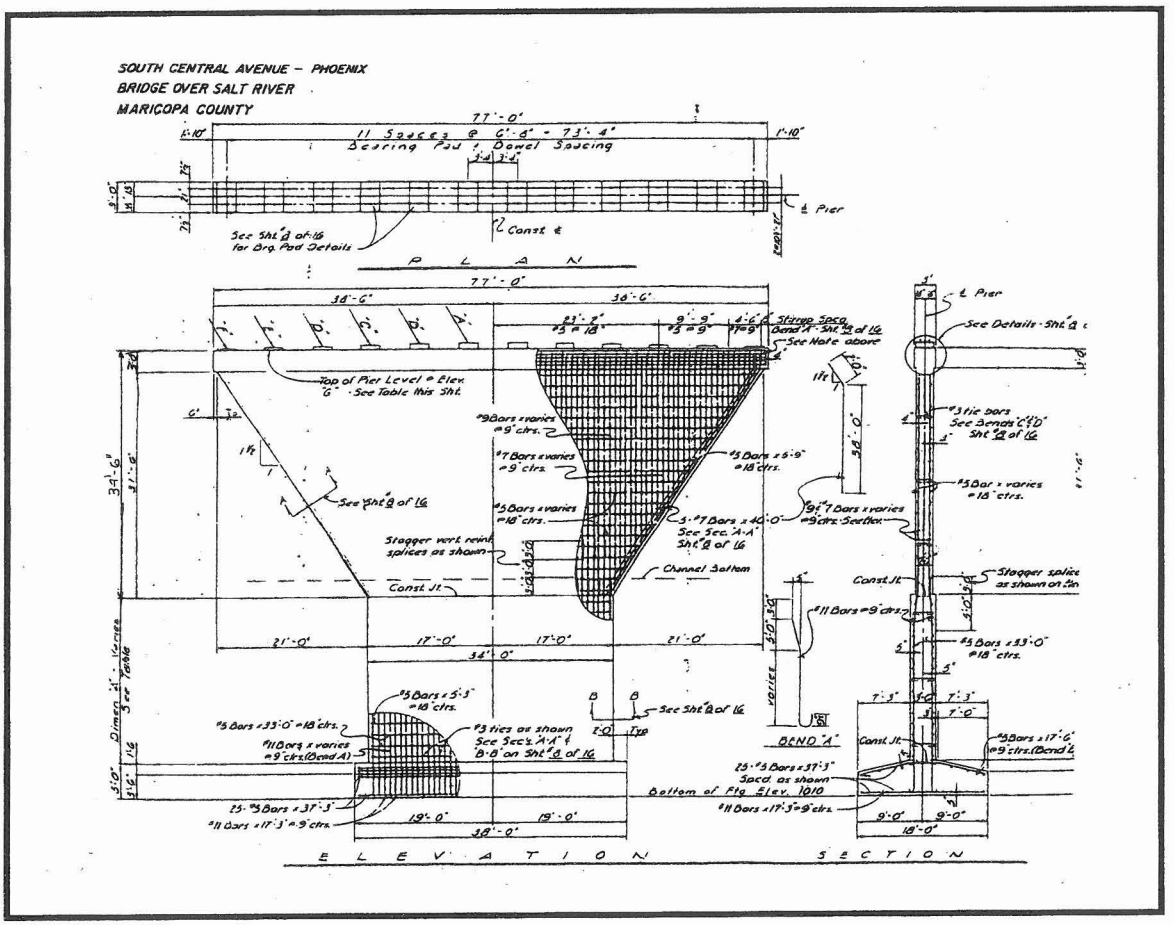

Pier Elevation and Section – South Central Avenue Bridge

4.0 SUMMARY OF ANALYSIS

The bridge scour analysis for the low-flow channel performed by West Consultants, Inc is based on the 100-year discharge of 166,000 cfs and a velocity of 14.33 fps. This discharge is considered the most critical flow; as a result, the piers are subjected to the critical flow local scour. Based on the results of the low-flow channel, the abutment scour was estimated to be insignificant at the bridge structures. For these conditions, the structural analysis only needs to be executed for Case 3 of the "Bridge Design and Detailing Manual (BD&D)". The "Bridge Design and Detailing Manual (BD&D)," Arizona Department of Transportation (ADOT), 1994 Edition provides guidelines for the analysis of bridges over waterways for four different streambed ground lines in part 1 – Section 1.2.1.

The bridge structure is verified to withstand the forces from the AASHTO load group combinations I to VI. The following figure provides a detail illustration of the four different streambed ground lines for bridges over natural waterways.

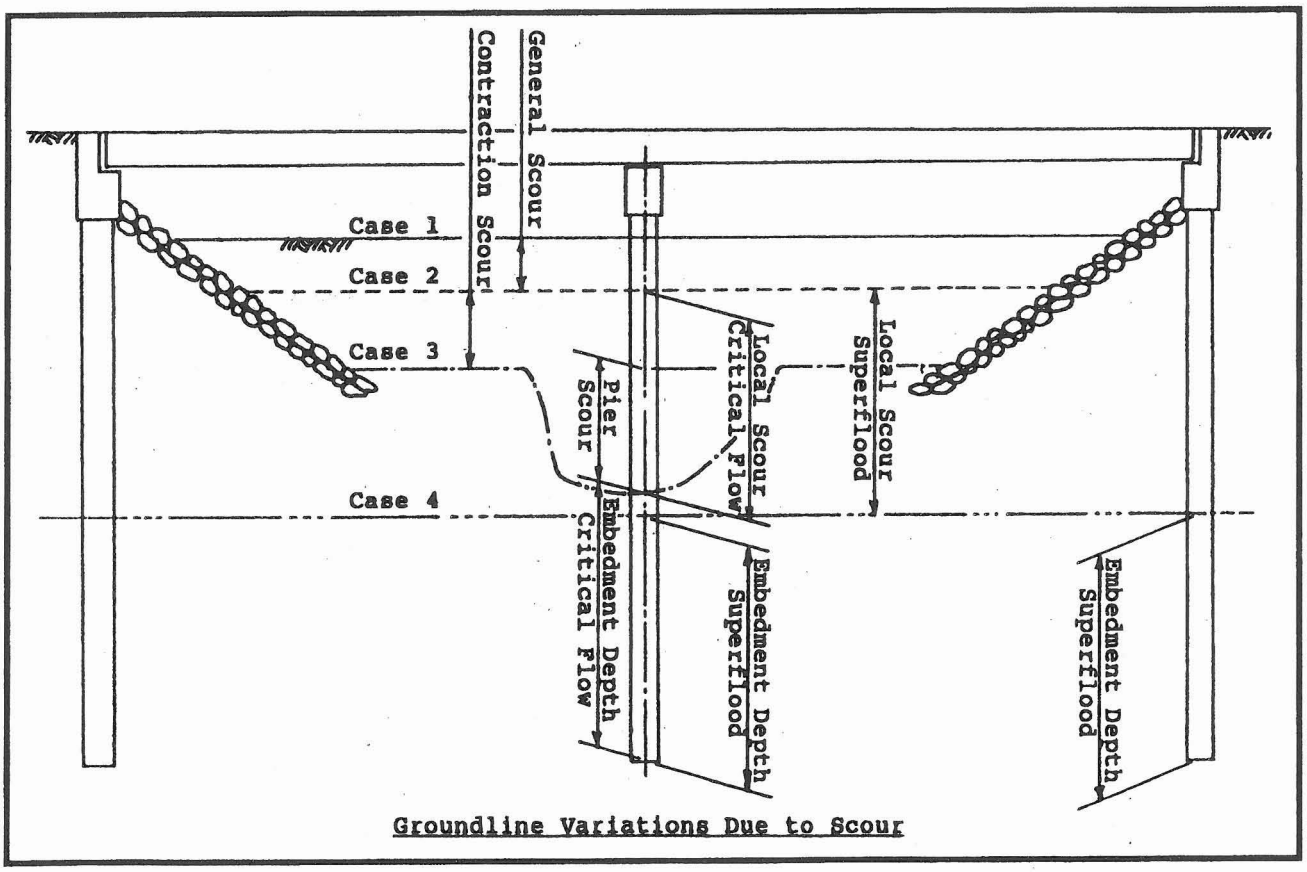

A three-dimensional, finite-element analysis of the existing bridge was performed using the structural program SAP90.

The assumptions made on the structural model for the analysis of the ***South Central Avenue Bridge*** are as follows:

- The support at the abutment is represented as a roller since there is an expansion joint at the abutment seat. As a result, most of the bridge loads are conveyed to the pier elements.

- A point of fixity at the bottom of the spread footing was assumed to ideally model the support conditions at the piers. In addition, soil springs were generated to model the stiffness and support provided at the bridge foundations. The soil springs where included in the structural model in order to approximate the existing conditions in the piers.

  In lieu of a geotechnical report, some assumptions were made about the native material within the riverbed. Soil parameters used to model the soil springs at the piers are based on a preliminary geothechnical report performed by **AGRA** Earth & Environmental, Inc on October 14, 1999. A copy of their findings is included in Appendix A. The geothechnical review was based on existing soil borings at ***Seventh Avenue Bridge***. **AGRA** Earth & Environmental, Inc has provided us with an Effective Unit Weight (γ_{soil}) of 140 pcf and a Submerged Unit Weight (γ_{sub}) of 77.6 pcf.

- The stream forces for the 100-year peak event were applied to the piers along with other loads for the appropriate load groups as per AASHTO specifications.

Finally, the demand forces generated by SAP90 were compared to the pier capacities; where the demand exceeds the capacity, additional retrofit measures must be taken.

Where the demand placed upon the pier is equal to or less than its capacity, additional retrofit measures need not be taken.

The structural analysis demonstrated that the 34-foot wide pier wall column and the 38-foot pier footing are adequate to resist the stream flow and scour associated with the 100-year peak event. The flexural demand forces from SAP90 were compared to the pier wall column flexural capacities. The structural program PCYIELD was used to determine the flexural capacity of the pier wall column based upon the area of concrete, tie spacing and longitudinal reinforcement. FAD a computer program developed to assist the Bridge Engineer in designing and analyzing spread footings subjected to eccentrically applied loads that produce biaxial bending moments was used to determine the capacity of the pier footing. The capacity/demand ratio for ***South Central Avenue Bridge*** is more than 1.00 for both structural elements.

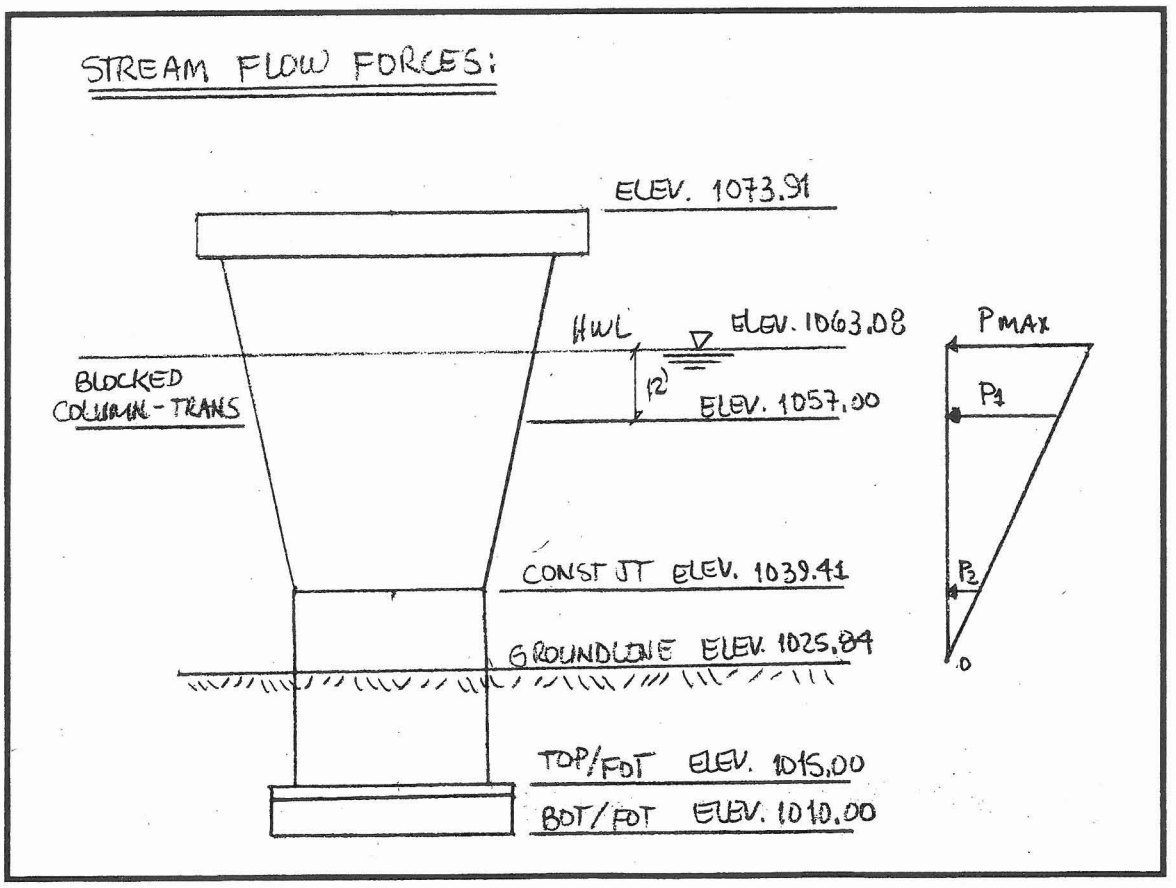

Stream Flow Force Diagram – South Central Avenue Bridge

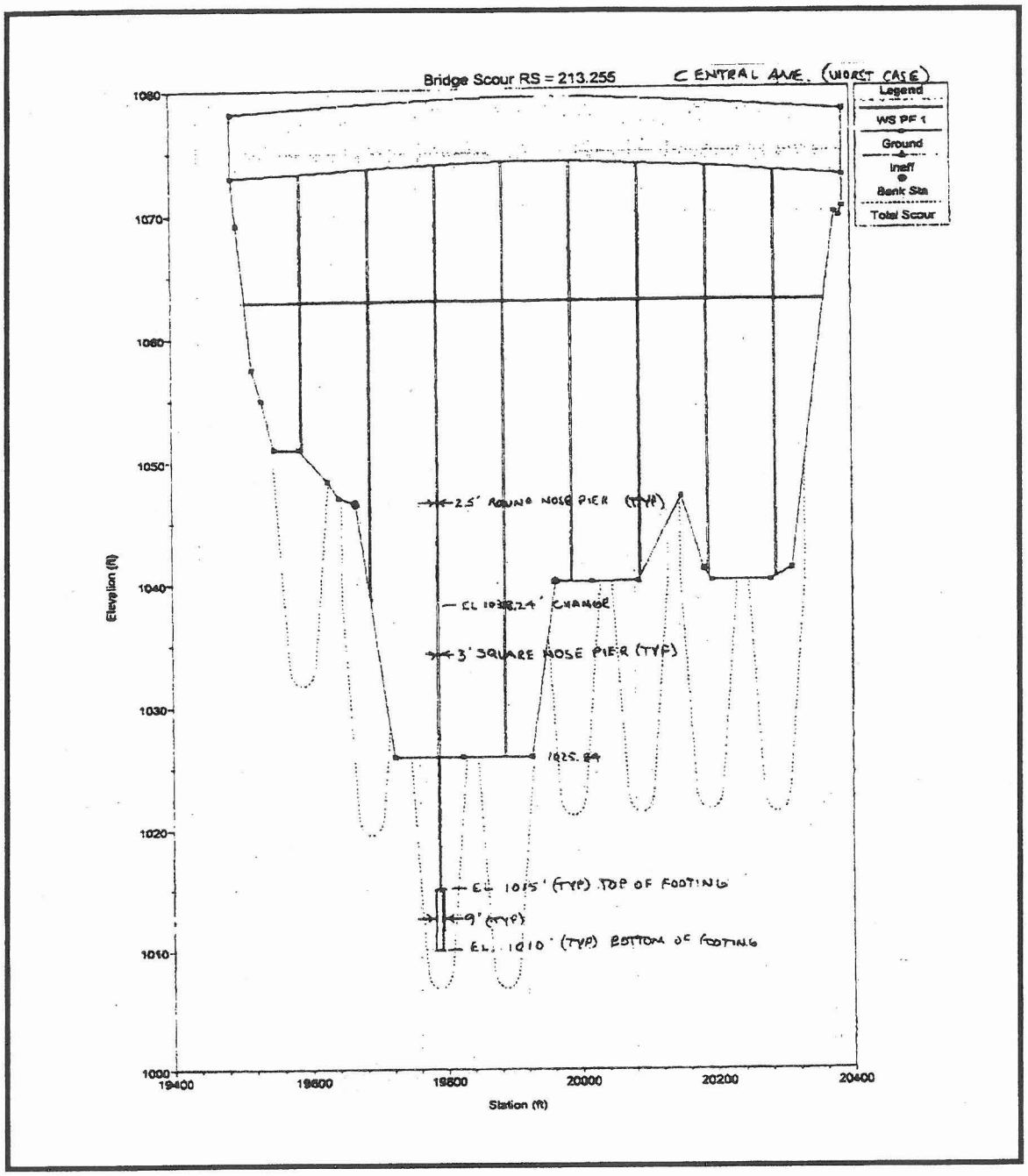

Proposed Scour – South Central Avenue

APPENDIX A

AGRA Earth & Environmental, Inc. – Soil Report

AGRA
ENGINEERING GLOBAL SOLUTIONS

AGRA Earth & Environmental, Inc.
3232 West Virginia Avenue
Phoenix
Arizona 85009-1502
Tel (602) 272-6848
Fax (602) 272-7239
Toll Free 1-800-248-AGRA

October 14, 1999
AEE Job No. 9-117-001113

U.S. Army Corps of Engineers
Los Angeles District, Installation Support Section
911 Wilshire Boulevard
Los Angeles, CA 90017-3401

Attention: Jatin T. Desai
Civil Design B
Engineering Division

Gentlemen:

RE: STRUCTURAL RETROFIT
7TH AVENUE BRIDGE
PHOENIX, ARIZONA

In response to your request, AGRA Earth & Environmental, Inc. (AEE) presents herein an evaluation of the downward and upward capacities of the existing foundations for the 7th Avenue bridge over the Salt River in Phoenix, Arizona. The evaluation was for two conditions of flood flow and resulting scour around the foundations, as provided by Daniel N. Heller, P.E., Principal with T. Y. Lin International. Ultimate downward and upward capacities are provided in this letter report, along with a brief discussion of the appropriate safety factor to use for the flood conditions assumed.

Based on the as-built plans for the 7th Avenue bridge, the foundation system consists of drilled, cast-in-place concrete shafts connected to pier caps. The shafts have a diameter of 5.0 feet from the bottom of the pier cap (about elevation 1061feet) to elevation 1032.5 feet. Below this elevation to the base of the shafts (elevation 948 feet) the shaft diameter is 7.0 feet.

Two conditions of maximum scour were evaluated, one extending to elevation 1002.8 feet and the other to elevation 1012.0 feet. These conditions are representative of the maximum scour at Piers 3 and 4. The embedded depths of the 7-foot diameter shafts for these conditions are about 55 and 64 feet, respectively.

Based on the boring logs included with the project plans, the embedded sections of the shafts at maximum scour are in very dense, well-graded gravels or sand, gravel and cobble (SGC) mixtures. The number of blows per foot required to penetrate the soil strata of interest using a Becker hammer drill advancing 6 5/8-inch outside diameter steel drive pipe was evaluated. At the location of Pier 3, the blow count values varied from 55 to 233 with a mean of 126. And at the location of Pier 4, the blow count values varied from 43 to 175 with a mean of 105. These blow counts are indicative the soil descriptions shown on the boring logs. Further, no significant

soft sand or sand and gravel layers were indicated.

Shaft capacities for compressive loads were computed using the Beta method recommended by AASHTO (1996).[1] The governing equations and the parameters assumed for the analyses are shown on the attached calculation sheets. A single SGC stratum having a saturated unit weight of 140 pounds per cubic foot (pcf) was assumed. The reinforced concrete shafts were assumed to have a total unit weight of 145 pcf. The bouyant unit weights for these materials were assumed to be 77.6 and 81.6 pcf, respectively. The unit end bearing of the shafts was assumed to be 90 kips per square foot, based on the recorded blow count values. However, for the 7 foot diameter shafts the procedure requires this value be reduced by about 40 percent.

The calculated ultimate downward, or compression, capacities are 3,914 and 4,446 kips for maximum scour elevations of 1002.8 and 1012.0 feet, respectively. The calculated ultimate upward, or tension, capacities are 2,199 and 2,790 kips, respectively. These values are for the soil and do not consider the compressive or tensile capacities of the reinforced concrete shafts.

AASHTO (1996) recommends a safety factor of 2.5 be applied to the ultimate capacities, unless a load test is conducted. However, this safety factor is intended to apply to normal loading conditions. For the extreme loading conditions associated with maximum scour events, AEE typically recommends a factor of safety of 1.5 be applied.

Should you have any questions concerning the analyses presented in this letter report, please do not hesitate in contacting either of the undersigned.

Respectfully submitted,

AGRA Earth & Environmental, Inc.

Lawrence A. Hansen, Ph.D., P.E.
Senior Vice President

Reviewed by:

Norman H. Wetz, P.E.
Senior Geotechnical Engineer

c: Addressee (1)
T. Y. Lin International
Attn: Daniel N. Heller, P.E., Principal (1)

[1] American Association of State Highway and Transportation Officials (AASHTO), 1996, Standard Specifications for Highway Bridges, Sixteenth Edition, Washington, D.C.

7TH AVE BRIDGE

ULTIMATE CAPACITY BY BETA METHOD

SCOUR ELEVATION = 1002.8'

Sheet 1 of 2
Date: 10/12/99
By: LAH
Ch. By: NHW
Job/Prop. No. 9-117-001113

$Q_{ULT} = Q_S + Q_T - W$ COMPRESSION

$= Q_S + W$ TENSION

$Q_S = \pi B \sum_{i=1}^{n} \gamma_i z_i \beta_i \Delta z_i$

$\gamma_i \cong 140 - 62.4 = 77.6$ PCF (SUBMERGED)
$\Delta z_i = 1002.8 - 948 = 54.8'$
$z_i = \frac{1}{2}(54.8) = 27.4'$
$B = 7'$
$n = 1$

$\beta_i = 1.5 - 0.135 (z_i)^{1/2}$
$= 1.5 - 0.135 (27.4)^{1/2} = 0.79$

$Q_S = \pi (7)(77.6)(27.4)(0.79)(54.8)/1000$

$= 2{,}024$ KIPS

$Q_T = q_{FT} A_T$

$q_{FT} = 90 (50/12B) = 90 (50/84) = 53.6$ KSF
$A_T = \pi B^2/4 = \pi (7)^2/4 = 38.5$ FT^2

$Q_T = 53.6 (38.5) = 2{,}064$ KIPS

$W = \gamma_c A \Delta z$ $(\gamma_c \cong 145 - 62.4 = 82.6$ PCF$)$

$= 82.6 (38.5)(54.8)/1000$

$= 174$ KIPS

$Q_{ULT} = 2{,}024 + 2{,}064 - 174 = 3{,}914$ KIPS COMPRESSION

$Q_{ULT} = 2{,}024 + 174 = 2{,}199$ KIPS TENSION

AGRA
ENGINEERING GLOBAL SOLUTIONS

7TH AVE BRIDGE

ULTIMATE CAPACITY BY BETA METHOD

SCOUR ELEVATION = 1012.0

Sheet 2 of 2
Date: 10/12/99
By: LAH
Ch. By: NHW
Job/Prop. No. 9-117-001113

SEE PREVIOUS PAGE FOR EQUATIONS

$\gamma_i = 77.6$ PCF (SUBMERGED)
$\Delta z_i = 1012.0 - 948 = 64.0'$
$z_i = \frac{1}{2}(64.0) = 32.0'$
$B = 7'$
$n = 1$

$\beta_i = 1.5 - 0.135(32.0)^{1/2}$
$= 0.74$

$Q_s = \pi(7)(77.6)(32.0)(0.74)(64.0)/1000$

$= 2{,}586$ KIPS

$Q_T = 2{,}064$ KIPS

$W = 82.6(33.5)(64.0)/1000$

$= 204$ KIPS

$Q_{ULT} = 2{,}586 + 2{,}064 - 204 = 4{,}446$ KIPS COMPRESSION

$Q_{ULT} = 2{,}586 + 204 = 2{,}790$ KIPS TENSION

AGRA
ENGINEERING GLOBAL SOLUTIONS

APPENDIX B

South Central Avenue Bridge Calculations

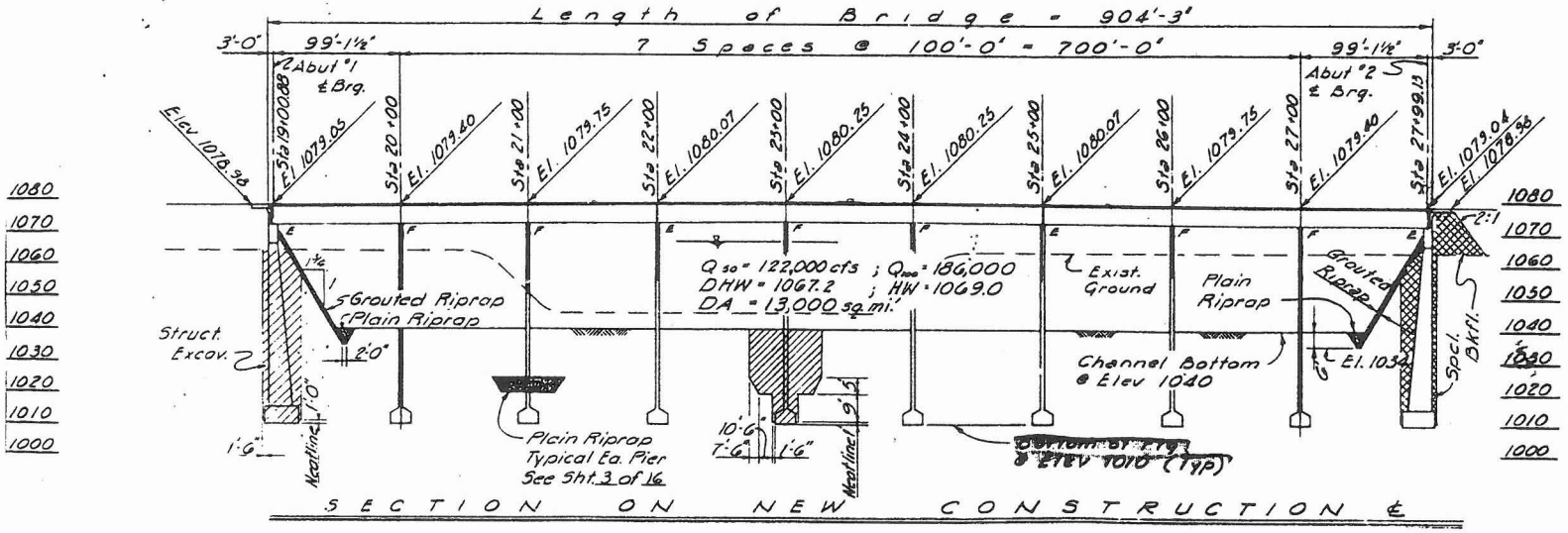

NOTE:
Median Barrier & Traffic Barrier shown apply both to deck and approach slabs. See Det'ls. Sht. #15 of 16

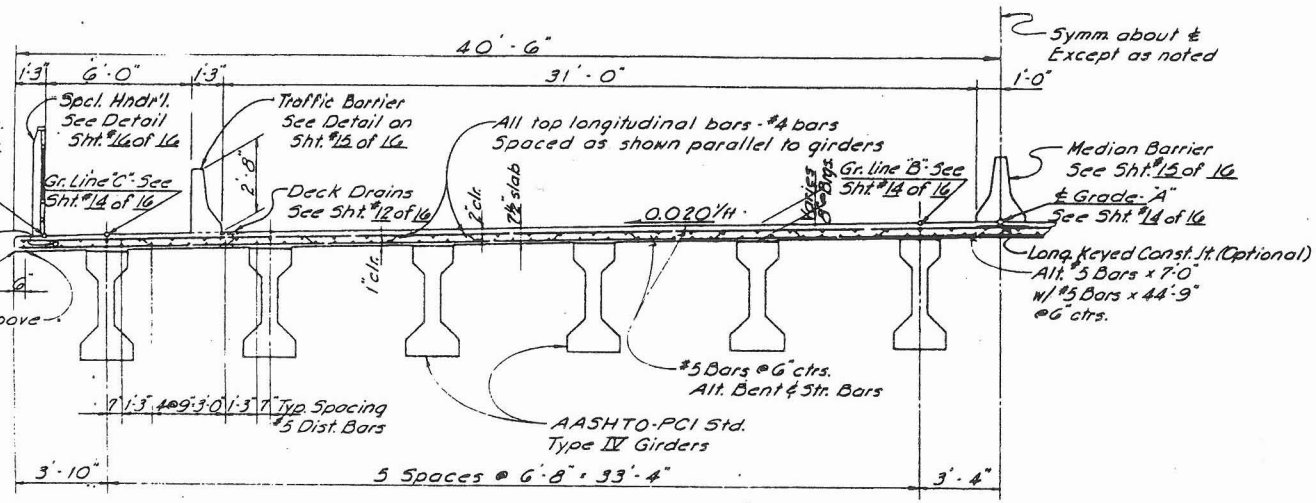

TYPICAL DECK SECTION

PRELIMINARY NOT FOR CONSTRUCTION

Project: Salt River Bridge - Scour
Item: Scour Central Group
Job No. 1317.00
Designer: VPD
Date: 9/15/99
Sheet: of
Checker:
Date:
Grid: 1/8"

PRELIMINARY INTERNATIONAL

Project: Salt River Bridges - Scale

Item: South Central Avenue

Job No. 12-7-00 Sheet: of

Designer: VDC Date: 4/15/02

Checker: Date:

Grid: 1/8"

SOUTH CENTRAL AVENUE — PHOENIX
BRIDGE OVER SALT RIVER
MARICOPA COUNTY

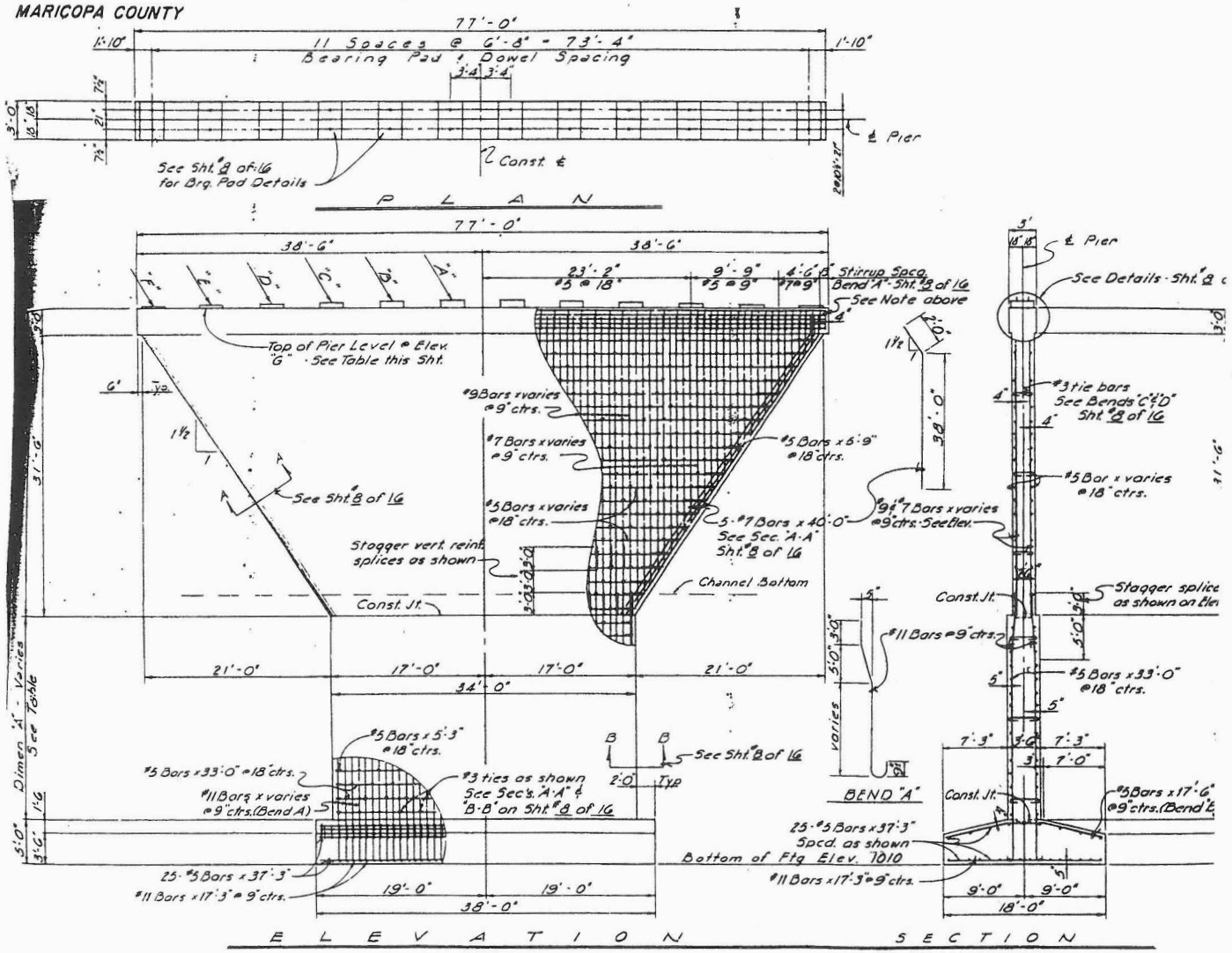

- DESIGN CONDITIONS

- 3 - THREE SPAN UNITS OF 100 ft x 81'-0" WIDTH
- HS20 LIVE LOAD - 4 LANES
- 12 AASHTO - PCI Std. Type IV GIRDERS
- ALLOW FOR 25 PSF FUTURE WEARING SURFACE

- MATERIALS

- CONCRETE : NORMAL WEIGHT

CLASS "A", $f'c = 2{,}500$ PSI - BARRIERS AND APPROACH SLAB

CLASS "D", $f'c = 3{,}000$ PSI - DECK SLAB, DIAPHRAGMS, ABUTMENTS & PIERS
$f_c = 1200$ PSI

CLASS "S", $f'c = 5250$ PSI - PRECAST AASHTO Type IV GIRDERS
$f'_{ci} = 4150$ psi

-REINFORCEMENT

ALL REINFORCING BARS ARE A615 DEFORM BILLET STEEL GRADE 40 OR 60

F_y MIN = 40,000 psi or 60,000 psi

$f_s = 20{,}000$ psi or 24,000 psi

$f_s = 20{,}000$ psi - DECK AND DIAPHRAGMS ONLY.

- GIRDER SELECTION

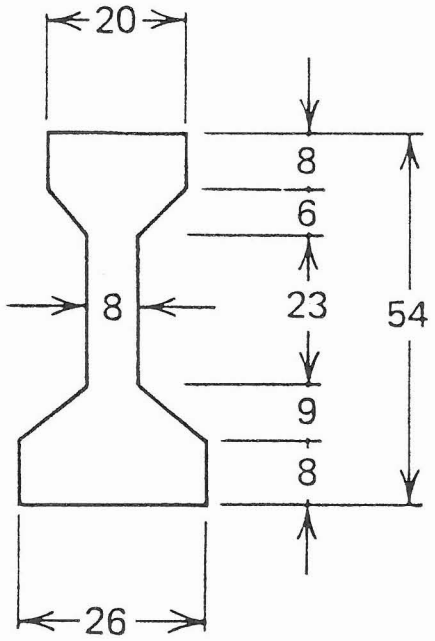

SECTION PROPERTIES

$A_c = 789$ in^2

$I = 260{,}741$ in^4

$y_b = 24.73$ in

$S_b = 10543.510$ in^3

$S_t = 8908.131$ in^3

$w_o = 822$ plf

I_{yy}

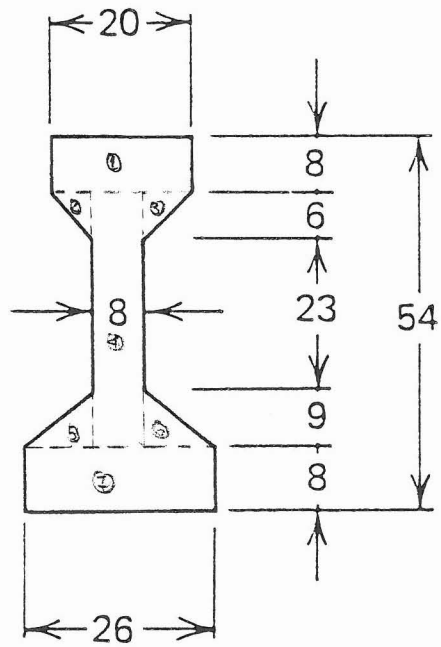

SECTION	AREA (Ft²)	X bot (Ft)	Area * X bot (Ft³)	Area (X-X bot)² (Ft⁴)	Io (Ft⁴)
1	1.111	1.083	1.2037	0.00	0.2572
2	0.125	0.91667	0.11458	0.00344	0.00174
3	0.125	1.250	0.15625	0.00349	0.00174
4	2.111	1.083	2.28704	0.00	0.07819
5	0.28125	0.833	0.23438	0.01758	0.00879
6	0.28125	1.333	0.3750	0.01758	0.00879
7	1.444	1.083	1.56481	0.00	0.56507
	Σ 5.4785		Σ 5.93576	Σ 0.04209	Σ 0.92151

$$\bar{X} = \frac{\Sigma \text{Area} * X\,bot}{\Sigma \text{Area}} = \frac{5.93576}{5.4785} = 1.083\,Ft$$

$$I_{yy} = 0.04209 + 0.92151 = 0.96360\ Ft^4$$

TYLIN INTERNATIONAL

Project:	Salt River Bridges Scour	Job No.	1317.00	Sheet:	
Item:	South Central Avenue Bridge	Designer:	VPD	Date:	9/15/99
D:\My Documents\Projects\Salt River Bridges - Scour\South Central Ave\excel\[geom.xls]COOR		Checker:		Date:	

Concrete Properties

F'c (slab):	3000 PSI
F'c (girder):	5250 PSI
No.Girders:	12

Left Outside distance:	3.833 ft
Girder Spacing:	6.667 ft
Right outside distance:	3.833 ft

Girder Properties:

Area:	5.479 ft^2
Yb:	2.061 ft^2
Yt:	2.439 ft^2
H:	4.500 ft^2
Ix:	12.574 ft^4
St:	5.155 ft^3
Sb:	6.102 ft^3

Section Properties for Superstructure:

Area:	117.208 ft^2
Ycb:	3.285 ft^2
Yct:	1.882 ft^2
Hc:	5.167 ft^2
Izz:	346 ft^4
Iyy:	56092 ft^4
Ixx:	37.475 ft^4

Izz

	Location	X ft	Width ft	Thickness ft	E ksf	Area ft^2	y ft	Area*y ft^3	A(y-ycb)^2 ft^4	I ft^4	E(I+Ay^2) ksf-ft^4
0.0 L	SLAB	0.000	81.000	0.625	449571	50.63	4.85	245.74	124.68	1.65	56793471
	HAUNCH		1.667	0.042	449571	0.83	4.52	3.77	1.27	0.00	572398
	G1				594726	5.48	2.06	11.29	8.21	12.57	12360201
	G2				594726	5.48	2.06	11.29	8.21	12.57	12360201
	G3				594726	5.48	2.06	11.29	8.21	12.57	12360201
Girders	G4				594726	5.48	2.06	11.29	8.21	12.57	12360201
	G5				594726	5.48	2.06	11.29	8.21	12.57	12360201
	G6				594726	5.48	2.06	11.29	8.21	12.57	12360201
	G7				594726	5.48	2.06	11.29	8.21	12.57	12360201
	G8				594726	5.48	2.06	11.29	8.21	12.57	12360201
	G9				594726	5.48	2.06	11.29	8.21	12.57	12360201
	G10				594726	5.48	2.06	11.29	8.21	12.57	12360201
	G11				594726	5.48	2.06	11.29	8.21	12.57	12360201
	G12				594726	5.48	2.06	11.29	8.21	12.57	12360201
					Sum:	117.21		385.01			205688279
							ycb=	3.28 ft			

Iyy

	Location	X ft	Width ft	Thickness ft	E ksf	Area ft^2	y ft	Area*y ft^3	A(y-ycb)^2 ft^4	I ft^4	E(I+Ay^2) ksf-ft^4
0.0 L	SLAB	0.000	0.625	81.000	449571	50.63	40.50	2050.31	0.00	27679.22	12443765062
	HAUNCH		0.042	1.667	449571	0.83	40.50	33.75	441.36	0.193	198508348
	G1	36.667			594726	5.48	3.83	21.00	7366.44	0.964	4381584359
	G2	30.000			594726	5.48	10.50	57.53	4931.25	0.964	2933316167
	G3	23.333			594726	5.48	17.17	94.06	2983.10	0.964	1774701613
Girders	G4	16.667			594726	5.48	23.83	130.59	1521.99	0.964	905740698
	G5	10.000			594726	5.48	30.50	167.11	547.92	0.964	326433421
	G6	3.333			594726	5.48	37.17	203.64	60.88	0.964	36779783
	G7	3.333			594726	5.48	43.83	240.17	60.88	0.964	36779783
	G8	23.333			594726	5.48	50.50	276.70	547.92	0.964	326433421
	G9	30.000			594726	5.48	57.17	313.23	1521.99	0.964	905740698
	G10	23.333			594726	5.48	63.83	349.75	2983.10	0.964	1774701613
	G11	16.667			594726	5.48	70.50	386.28	4931.25	0.964	2933316167
	G12	36.667			594726	5.48	77.17	422.81	7366.44	0.964	4381584359
					Sum:	117.21		4746.94			33359385493
							ycb=	40.50 ft			

Ixx

	Location	Width ft	Thickness ft	E ksf	E*W*T^3 ksf-ft^4
0.0 L	SLAB	81.000	0.625	449571	8890436
	HAUNCH	1.667	0.042	449571	650
Girders	G1 to G12	4.500	1.218	594726	57971795
				Sum:	66862882
					3

SLAB HAUNCH GIRDERS

$$EI=\frac{(E*W1*T1^3+E*No.\ Girders*W2*T2^3+E*No.\ Girders*W3*T3^3)}{3}$$

EI= 22287627

Ixx= 37.475 ft^4

TYLIN INTERNATIONAL

Project:	Salt River Bridges Scour	Job No.	1317.00	Sheet:	
Item:	7th Avenue Bridge	Designer:	VPD	Date:	9/15/99
D:\My Documents\Projects\Salt River Bridges - Scour\South Central Ave\excel\[geom.xls]COOR		Checker:		Date:	

SECTION PROPERTIES

HAUNCH PROPERTIES

Location	X ft	Width ft	Thickness ft	E ksf	Area ft^2	y ft	Area*y ft^3	A(y-ycb)^2 ft^4	I ft^4	E(I+Ay^2) ft^4
G1	36.667	0.042	1.667	449571	0.069	3.83	0.27	93.36	0.016	41981032
G2	30.000	0.042	1.667	449571	0.069	10.50	0.73	62.50	0.016	28105394
G3	23.333	0.042	1.667	449571	0.069	17.17	1.19	37.81	0.016	17004884
G4	16.667	0.042	1.667	449571	0.069	23.83	1.66	19.29	0.016	8679501
G5	10.000	0.042	1.667	449571	0.069	30.50	2.12	6.94	0.016	3129245
G6	3.333	0.042	1.667	449571	0.069	37.17	2.58	0.77	0.016	354118
G7	3.333	0.042	1.667	449571	0.069	43.83	3.04	0.77	0.016	354118
G8	23.333	0.042	1.667	449571	0.069	50.50	3.51	6.94	0.016	3129245
G9	30.000	0.042	1.667	449571	0.069	57.17	3.97	19.29	0.016	8679501
G10	23.333	0.042	1.667	449571	0.069	63.83	4.43	37.81	0.016	17004884
G11	16.667	0.042	1.667	449571	0.069	70.50	4.90	62.50	0.016	28105394
G12	36.667	0.042	1.667	449571	0.069	77.17	5.36	93.36	0.016	41981032
					0.833		33.75	441	0.193	198508348
						ycb=	40.500	ft		

ADDITIONAL DEAD LOAD ADDED

DIAPHRAGMS

Location	Total Load kips
ABUT 1	26.22
PIER 1	68.72
PIER 2	68.72
PIER 3	75.45
PIER 4	68.72
PIER 5	68.72
PIER 6	75.45
PIER 7	68.72
PIER 8	68.72
ABUT 2	26.22

WALL COLUMN X-SECTION PROPERTIES

② AREA = 77.00' * 3.00' = 231 Ft²

$I_x = \frac{1}{12} * 77.00' * (3.00')^3 = 173.25$ Ft⁴

$I_y = \frac{1}{12} * 3.00' * (77.00')^3 = 114133.25$ Ft⁴

$J = 0.333 * 77.00 * (3.00)^3 = 692.307$ Ft⁴

w = 231 Ft² * 0.150 kcf = 34.65 K/Ft

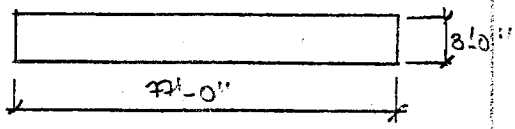

③ AREA = 76.00' * 2.50' = 190 Ft²

$I_x = \frac{1}{12} * 76.00' * (2.50')^3 = 98.96$ Ft⁴

$I_y = \frac{1}{12} * 2.50' * (76.00')^3 = 91453.33$ Ft⁴

$J = 0.333 * 76.00' * (2.50')^3 = 395.438$ Ft⁴

w = 190 Ft² * 0.150 kcf = 28.50 K/Ft

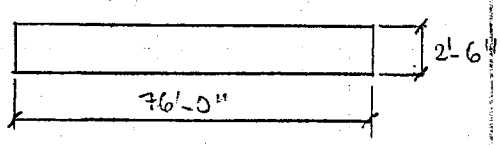

⑥ AREA = 34.00' * 2.50' = 85.0 Ft²

$I_x = \frac{1}{12} * 34.00 * (2.50)^3 = 44.27$ Ft⁴

$I_y = \frac{1}{12} * 2.50 * (34.00)^3 = 8188.33$ Ft⁴

$J = 0.333 * 34.00 * (2.50)^3 = 176.906$ Ft⁴

w = 85 Ft² * 0.150 kcf = 12.75 K/Ft

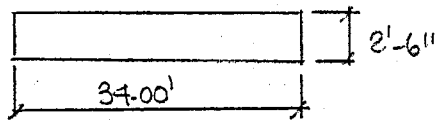

⑦ AREA = 34.00' * 3.50' = 119.00 Ft²

$I_x = \frac{1}{12} * 34.00 * (3.50)^3 = 121.48$ Ft⁴

$I_y = \frac{1}{12} * 3.50 * (34.00)^3 = 11463.67$ Ft⁴

$J = 0.333 * 34.00 * (3.50)^3 = 486.431$ Ft⁴

w = 119 Ft² * 0.150 kcf = 17.85 K/Ft

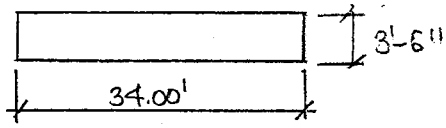

⑨ AREA = 38.00' * 18.00' = 684 Ft²

$I_x = \frac{1}{12} * 38.00' * (18.00)^3 = 18468$ Ft⁴

$I_y = \frac{1}{12} * 18.00' * (38.00)^3 = 82308$ Ft⁴

$J = 0.333 * 38.00' * (18.00)^3 = 73798.128$ Ft⁴

w = 684.0 Ft² * 0.150 kcf = 102.60 K/Ft

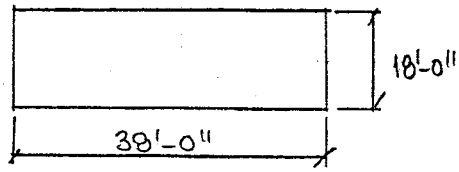

TYLIN INTERNATIONAL

Project:	Salt River Bridges Scour	Job No.	1317.00	Sheet:	
Item:	South Central Avenue Bridge	Designer:	VPD	Date:	10/21/99
D:\My Documents\Projects\Salt River Bridges - Scour\South Central Ave\excel\[geom.xls]COOR		Checker:		Date:	

COORDINATES & SECTION PROPERTIES

Description	Location	Joint No.	X ft	Y ft	Z ft	Area ft^2	Iz ft^4	Iy ft^4	Ix ft^4
ABUT 1	0.00 L	101	0.00	0.00	1078.37	117.208	345.854	56092	37.475
	0.25 L	102	25.00	0.00	1078.37	117.208	345.854	56092	37.475
	0.50 L	103	50.00	0.00	1078.37	117.208	345.854	56092	37.475
	0.75 L	104	75.00	0.00	1078.37	117.208	345.854	56092	37.475
PIER 1	1.00 L	105	100.00	0.00	1078.37	117.208	345.854	56092	37.475
	1.25 L	106	125.00	0.00	1078.37	117.208	345.854	56092	37.475
	1.50 L	107	150.00	0.00	1078.37	117.208	345.854	56092	37.475
	1.75 L	108	175.00	0.00	1078.37	117.208	345.854	56092	37.475
PIER 2	2.00 L	109	200.00	0.00	1078.37	117.208	345.854	56092	37.475
	2.25 L	110	225.00	0.00	1078.37	117.208	345.854	56092	37.475
	2.50 L	111	250.00	0.00	1078.37	117.208	345.854	56092	37.475
	2.75 L	112	275.00	0.00	1078.37	117.208	345.854	56092	37.475
PIER 3	3.00 L	113	300.00	0.00	1078.37	117.208	345.854	56092	37.475
	3.25 L	114	325.00	0.00	1078.37	117.208	345.854	56092	37.475
	3.50 L	115	350.00	0.00	1078.37	117.208	345.854	56092	37.475
	3.75 L	116	375.00	0.00	1078.37	117.208	345.854	56092	37.475
PIER 4	4.00 L	117	400.00	0.00	1078.37	117.208	345.854	56092	37.475
	4.25 L	118	425.00	0.00	1078.37	117.208	345.854	56092	37.475
	4.50 L	119	450.00	0.00	1078.37	117.208	345.854	56092	37.475
	4.75 L	120	475.00	0.00	1078.37	117.208	345.854	56092	37.475
PIER 5	5.00 L	121	500.00	0.00	1078.37	117.208	345.854	56092	37.475
	5.25 L	122	525.00	0.00	1078.37	117.208	345.854	56092	37.475
	5.50 L	123	550.00	0.00	1078.37	117.208	345.854	56092	37.475
	5.75 L	124	575.00	0.00	1078.37	117.208	345.854	56092	37.475
PIER 6	6.00 L	125	600.00	0.00	1078.37	117.208	345.854	56092	37.475
	6.25 L	126	625.00	0.00	1078.37	117.208	345.854	56092	37.475
	6.50 L	127	650.00	0.00	1078.37	117.208	345.854	56092	37.475
	6.75 L	128	675.00	0.00	1078.37	117.208	345.854	56092	37.475
PIER 7	7.00 L	129	700.00	0.00	1078.37	117.208	345.854	56092	37.475
	7.25 L	130	725.00	0.00	1078.37	117.208	345.854	56092	37.475
	7.50 L	131	750.00	0.00	1078.37	117.208	345.854	56092	37.475
	7.75 L	132	775.00	0.00	1078.37	117.208	345.854	56092	37.475
PIER 8	8.00 L	133	800.00	0.00	1078.37	117.208	345.854	56092	37.475
	8.25 L	134	825.00	0.00	1078.37	117.208	345.854	56092	37.475
	8.50 L	135	850.00	0.00	1078.37	117.208	345.854	56092	37.475
	8.75 L	136	875.00	0.00	1078.37	117.208	345.854	56092	37.475
ABUT 2	9.00 L	137	900.00	0.00	1078.37	117.208	345.854	56092	37.475
PIER 4	Top/Pier	401	400.00	0.00	1073.91	231.000	173.250	114133	692.307
	Top/Column	402	400.00	0.00	1070.91	190.000	98.960	91453	395.438
	HWL	403	400.00	0.00	1063.08	163.892	85.361	70749	341.100
	Blocked Col	404	400.00	0.00	1051.08	123.879	64.520	39019	257.823
	Const Jt	405	400.00	0.00	1039.42	85.000	44.270	8188	176.906
	Groundline	406	400.00	0.00	1025.84	119.000	121.480	11464	485.431
	Top/Footing	407	400.00	0.00	1015.00	119.000	121.480	11464	485.431
	Footing	408	400.00	0.00	1013.50	684.000	18468.0	82380	73798.1
	Bot/Footing	409	400.00	0.00	1010.00	684.000	18468.0	82380	73798.1
PIER 5	Top/Pier	501	600.00	0.00	1073.91	231.000	173.250	114133	692.307
	Top/Column	502	600.00	0.00	1070.91	190.000	98.960	91453	395.438
	HWL	503	600.00	0.00	1060.00	153.622	80.012	62605	319.726
	Blocked Col	504	600.00	0.00	1051.08	123.879	64.520	39019	257.823
	Const Jt	505	600.00	0.00	1039.42	85.000	44.270	8188	176.906
	Groundline	506	600.00	0.00	1025.84	119.000	121.480	11464	485.431
	Top/Footing	507	600.00	0.00	1015.00	119.000	121.480	11464	485.431
	Footing	508	600.00	0.00	1013.50	684.000	18468.0	82380	73798.1
	Bot/Footing	509	600.00	0.00	1010.00	684.000	18468.0	82380	73798.1

- DESIGN LOADS - PER GIRDER

- GALVANIZED METAL HANDRAIL ≅ 50 lbs/ft *2 ÷ 1000 ÷ 12 girders = 0.00833 Klf
- CONCRETE BARRIER = 0.372 K/ft *2 ÷ 12 girders = 0.0620 Klf
- CONCRETE MEDIAN = 0.477 K/ft ÷ 12 girders = 0.03976 Klf
- SLAB = 81.00 ft * $\frac{7.5}{12}$ in * 0.150 kcf ÷ 12 girders = 0.63281 Klf
- FOOS = 31.0 ft *2 * 25 psf ÷ 1000 ÷ 12 girders = 0.12917 Klf
- GIRDER = 0.822 Klf
- BUILDUP = $\frac{0.5}{12}$ in * $\frac{20}{12}$ in * 0.150 kcf = 0.01042 Klf

≅ 1.70449 Klf

- ADDITIONAL DEAD LOADS

- PIER DIAPHRAGM

5.479 ft² - 1.444 ft²

FIXED PIER = [1.833 ft * [11 * 6.667 ft * 3.833 ft] + (4.0347 ft² * 1.833 ft) - (12 * 2 * 4.0347 ft² * 0.667 ft)] * 0.150 kcf = 68.717 Kips

EXPANSION PIER = [0.667 ft * [11 * 6.667 ft * 3.833 ft] + (4.0347 ft² * 0.667 ft) - (12 * 4.0347 ft² * 0.667 ft)] * 0.150 kcf = 37.725 Kips

- ABUTMENT DIAPHRAGM

EXPANSION ABUTMENT = [0.667 ft * 81.00 ft * 3.833 ft] - [12 * 4.0347 ft² * 0.667 ft]
= 174.792 ft³ * 0.150 kcf = 26.219 Kips

- INT. DIAPHRAGM = [0.667 ft * (6.667 * 3.833 ft) - (4.0347 ft² * 0.667)] * 11
= 157.892 ft³ * 0.150 kcf = 23.684 Kips

TABLE 3.0

Symmetrical three-span continuous beam.
Constant moment of inertia.
AASHO HS20-44 loading.

N=1.0

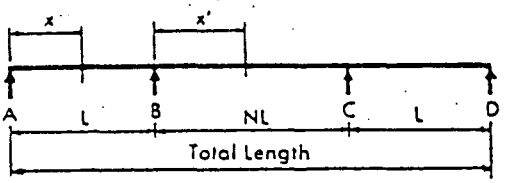

Total Length Ft.	Exter. Span Length "L"	Max. Reaction Kips.		Max. Shear Kips.		Max. Moment Kip.-ft.			Impact Coefficient				Dist.-Ft.	
		at A	at B	in AB at B	in BC at B or C	in AB at X	at B	in BC at X'	I	II	III	IV	X	X'
90	30.0	46.2	62.3	-53.0	49.6	228.1	-184.4	179.6	.300	.300	.300	.270	10.6	14.0
105	35.0	49.3	64.7	-56.5	53.1	286.6	-219.5	231.6	.300	.300	.300	.256	12.6	16.0
120	40.0	51.8	66.4	-59.0	55.7	352.4	-254.2	285.9	.300	.300	.300	.244	16.0	18.5
135	45.0	53.9	67.5	-60.8	57.8	422.2	-299.2	342.1	.294	.294	.294	.233	18.0	21.0
150	50.0	55.5	68.4	-62.3	59.4	492.8	-351.1	399.7	.286	.286	.286	.222	20.1	23.5
165	55.0	56.9	69.1	-63.4	60.8	564.0	-406.8	458.2	.278	.278	.278	.213	22.2	26.0
180	60.0	58.1	72.1	-64.3	61.9	635.7	-466.2	517.5	.270	.270	.270	.204	24.2	28.5
195	65.0	59.2	75.9	-65.1	62.8	707.6	-529.3	577.3	.263	.263	.263	.196	26.3	31.0
210	70.0	60.0	79.8	-65.7	63.6	779.9	-596.1	637.6	.256	.256	.256	.189	28.4	33.5
225	75.0	60.8	83.6	-66.2	64.2	852.3	-666.7	698.2	.250	.250	.250	.182	30.5	36.0
240	80.0	61.5	87.4	-66.6	64.8	924.9	-741.0	759.2	.244	.244	.244	.175	32.6	38.5
255	85.0	62.1	91.3	-67.0	65.3	997.6	-819.1	820.3	.238	.238	.238	.169	34.8	41.0
270	90.0	62.6	95.1	-67.4	65.7	1070.5	-900.9	881.7	.233	.233	.233	.164	36.9	43.5
285	95.0	63.1	99.0	-67.7	66.1	1143.4	-986.4	943.2	.227	.227	.227	.159	39.0	46.0
300	100.0	63.6	102.8	-67.9	66.4	1216.5	-1075.6	1004.9	.222	.222	.222	.154	41.1	48.5
315	105.0	64.0	106.6	-68.2	66.7	1289.6	-1168.6	1066.8	.217	.217	.217	.149	43.3	51.0
330	110.0	64.3	110.5	-69.4	67.1	1362.7	-1265.3	1128.7	.213	.213	.213	.145	45.4	53.5
345	115.0	64.6	114.3	-71.4	68.9	1436.0	-1365.8	1190.7	.208	.208	.208	.141	47.5	56.0
360	120.0	64.9	118.2	-73.4	70.8	1509.2	-1469.9	1252.8	.204	.204	.204	.137	49.6	58.5
Impact		I	IV	I	III	I	II	III						
Dead Load		.4000 x wL	1.1000 x wL	-.6000 x wL	.5000 x wL	.0800 x wL^2	-.1000 x wL^2	.0250 x wL^2					.4000 x L	.5000 x L

Reaction due to live load

- Live load Distribution Factors for front and Rear Axles.

"As per AASHTO 3.23.1, Lateral distribution of wheel loads at the ends of the beam shall be that produced by assuming the floor to act as a simple span between beam. For wheels or axles in other positions in the span, the lateral distribution shall be as per Table 3.23.1"

Span length $l_{span} = 100.00$ Ft

Impact factor $I = \frac{50}{l_{span}+125} = \frac{50}{100+125} = 0.222$

Beam spacing $S_{beam} = 6.667$ Ft

Spacing of axle $S_{axle} = 14$ Ft

Spacing of wheel $S_{wheel} = 6$ Ft

Reaction of front axle $R_{front} = 8$ Kips

Reaction of rear axle $R_{rear} = 32$ Kips

Distribution factor

For front and Rear axle $DF_F = \frac{S_{beam}}{11} = 0.606$

For middle axle $DF_M = \frac{S_{beam} - S_{wheel}}{S_{beam}} + 1 = 1.100$

Maximum live load Reaction

$$R_{max} = \frac{R_{rear}}{2} * DF_m + (R_{rear} + R_{front}) * \frac{(l_{span} - S_{axle})}{l_{span}} * DF_F$$

$$R_{max} = \frac{32.0}{2} * 1.10 + (32+8) * \frac{(100-14)}{100} * 0.606 = 38.448 \text{ Kips}$$

Reaction to the adjacent Beams

(the reaction to the adjacent beam will be conservatively placed as to maximize the effects being investigated)

$$R_{adj} = \frac{R_{rear}}{2} * \left(\frac{S_{wheel}}{S_{beam}}\right) + (R_{rear} + R_{front}) * \left(\frac{l_{span} - S_{axle}}{l_{span}}\right)(1 - DF_F)$$

$$R_{adj} = \frac{32.0}{2} * \left(\frac{6.00}{6.667}\right) + (32+8) * \left(\frac{100-14}{100}\right)(1-0.606) = 27.953 \text{ Kips}$$

$R_{live\ load} = 38.448$ Kips $+ 27.953$ Kips $= 66.401$ Kips $\div 2 = 33.201$ Kips $* 1.222$
$= 40.571$ Kips/wheel

Reaction due to 1 live load lane

P= 40.571 Kips

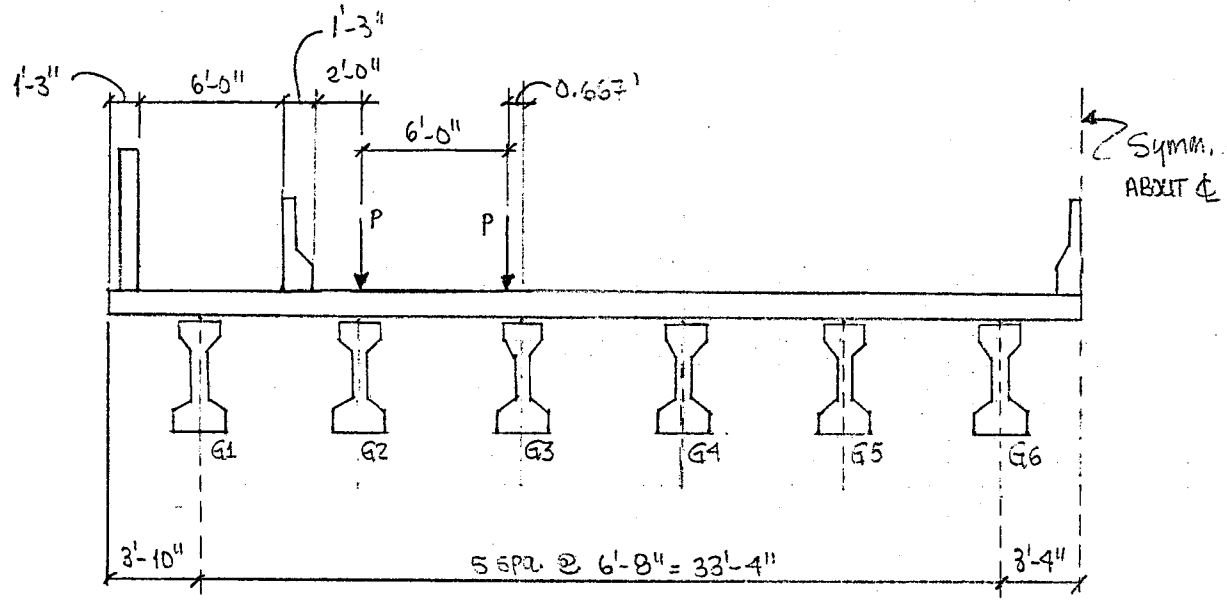

GIRDER 2

$$R_{G2} = \frac{R_{live}}{S_{beam}} * (S_{beam} - S_{wheel}) + R_{live}$$

$$R_{G2} = \frac{40.571}{6.667} * (6.667 - 6.000) + 40.571 = 44.630 \text{ Kips}$$

GIRDER 3

$$R_{G3} = \frac{R_{live}}{S_{beam}} * (S_{beam} - 0.667)$$

$$R_{G3} = \frac{40.571}{6.667} * (6.667 - 0.667) = 36.512 \text{ Kips}$$

T·Y·LIN INTERNATIONAL

Projects: Salt River Bridges - Scour | Job No. 1317.00 | Sheet: of
Item: South Central Avenue | Designer: VPD | Date: 9/16/99
Checker: | Date:
Grid: 1/8"

Reaction due to 2 live load lanes

P = 40.571 Kips

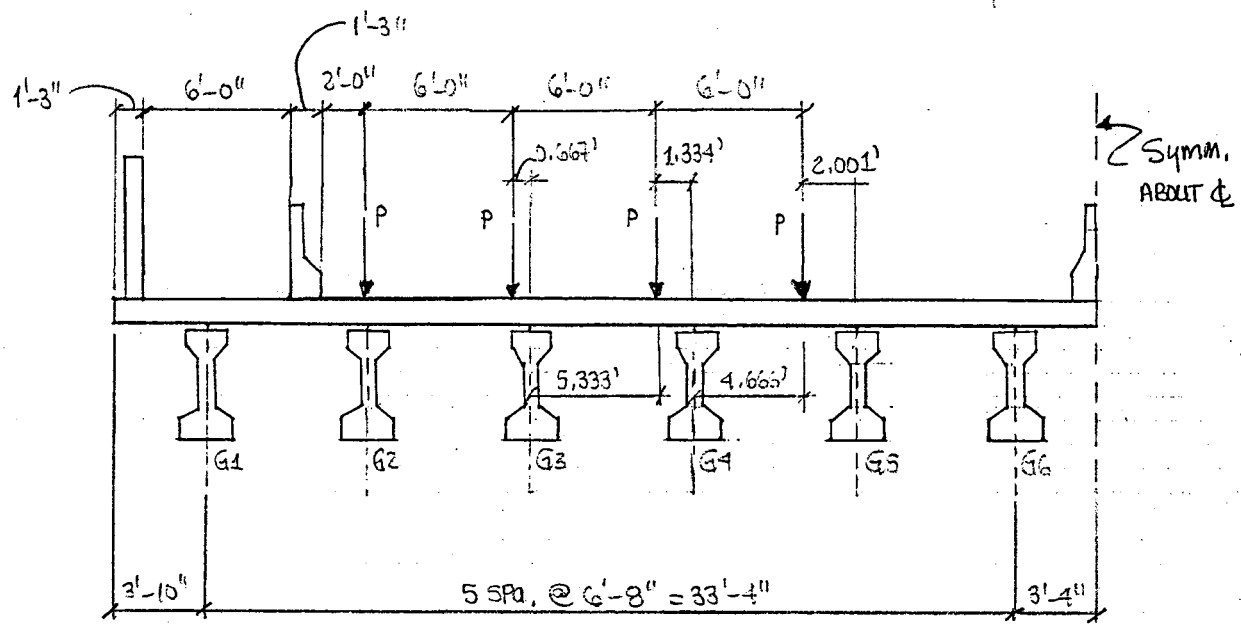

GIRDER 2

$$R_{G2} = \frac{R_{live}}{S_{beam}} * (S_{beam} - S_{wheel}) + R_{live}$$

$$R_{G2} = \frac{40.571}{6.667}(6.667 - 6.000) + 40.571 = 44.630 \text{ Kips}$$

GIRDER 3

$$R_{G3} = \frac{R_{live}}{S_{beam}} * (S_{beam} - 0.667) + \frac{R_{live}}{S_{beam}} * (S_{beam} - 5.333)$$

$$R_{G3} = \frac{40.571}{6.667} * (6.667 - 0.667) + \frac{40.571}{6.667} * (6.667 - 5.333) = 44.630 \text{ Kips}$$

GIRDER 4

$$R_{G4} = \frac{R_{live}}{S_{beam}} * (S_{beam} - 1.334) + \frac{R_{live}}{S_{beam}} * (S_{beam} - 4.666)$$

$$R_{G4} = \frac{40.571}{6.667} * (6.667 - 1.334) + \frac{40.571}{6.667} * (6.667 - 4.666) = 44.630 \text{ Kips}$$

GIRDER 5

$$R_{G5} = \frac{R_{live}}{S_{beam}} * (S_{beam} - 2.001)$$

$$R_{G5} = \frac{40.571}{6.667} * (6.667 - 2.001) = 28.394 \text{ Kips}$$

LIVE LOAD MOMENT @ BOTTOM OF WALL COLUMN.

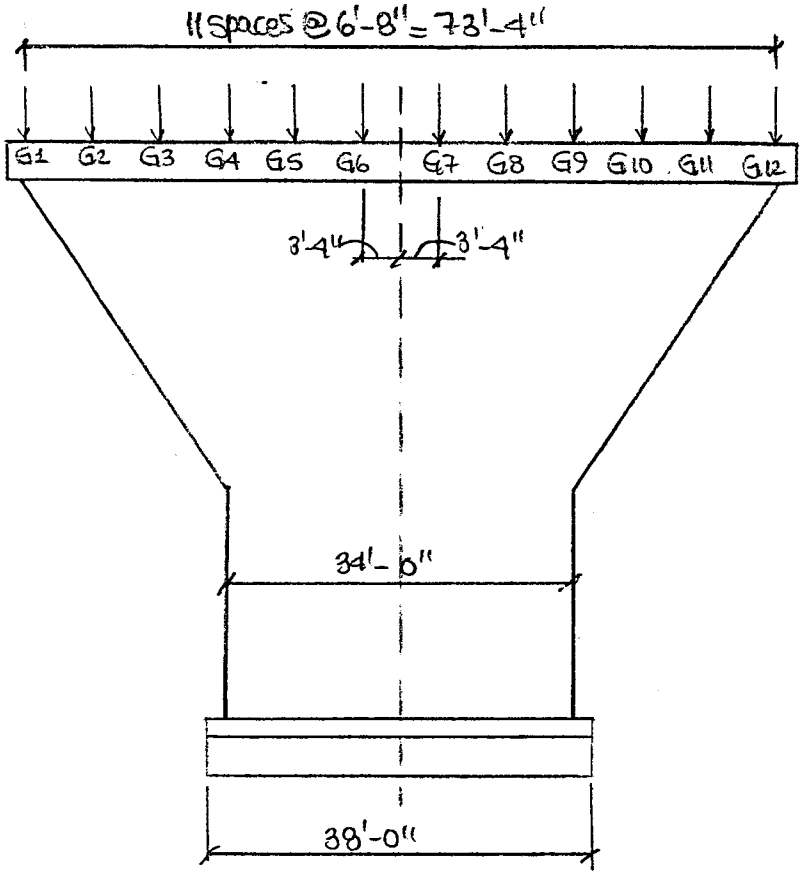

- MOMENT DUE TO 1 live load lane.

$M = 44.63^K * (4*6.667 + 3.333) + 36.512^K * (3*6.667 + 3.333)$

$M = 2190.92$ K-Ft

- MOMENT DUE TO 2 LIVE LOAD LANE

$M = 44.63^K * (4*6.667 + 3.333) + 44.63^K * (3*6.667 + 3.333) + 44.63^K (2*6.667 + 3.333) + 28.394^K * (1*6.667 + 3.333)$

$M = 3408.13$ K-Ft

- WIND LOADS

-ON SUPERSTRUCTURE

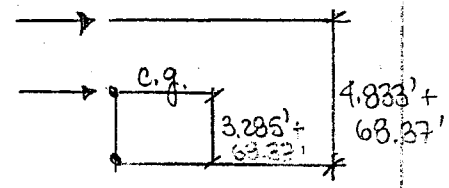

WIND LOAD = WIND $_{\text{TRANS}}^{\text{LONG}}$ * h WIND

$h_{WIND} = 4.50\ Ft + \frac{0.5''}{12} + \frac{7.5''}{12} + 4.50\ Ft = 9.667\ Ft$

POINT OF APPLICATION = $\frac{h_{WIND}}{2} = \frac{9.667}{2} = 4.833\ Ft$

$WIND\ LOAD_{TRANS} = 0.050\ KSF * 9.667\ Ft = 0.4833\ K/Ft * 1.0216 = 0.494\ K/Ft * 100\ Ft = 49.40\ Kips$

$WIND\ LOAD_{LONG} = 0.012\ KSF * 9.667\ Ft = 0.1160\ K/Ft * 1.0216 = 0.119\ K/Ft$

- OVERTURNING FORCES

$F_{WIND} = W_{OVER} * WIDTH_SUPERSTRUCTURE * LENGTH$

$W_{OVER} = 20\ Lbs/Ft^2$

POINT OF APPLICATION = 1/4 * WIDTH_SUPERSTRUCTURE

$F_{WIND} = 0.020\ KSF * 81.00\ Ft = 1.62\ K/Ft * 100\ Ft = 162.00\ Kips$

$M_{WIND} = 0.020\ KSF * 81.00\ Ft * \left(\frac{1}{4} * 81.00\ Ft\right) = 32.805\ \frac{K\text{-}Ft}{Ft}$

$M_{WIND}(P4) = 32.805\ K\text{-}Ft/Ft * 100.0\ Ft = 3280.50\ K\text{-}Ft$

$M_{WIND}(P5) = 3280.50\ K\text{-}Ft$

-ON SUBSTRUCTURE

WIND LOAD = WIND $_{\text{TRANS}}^{\text{LONG}}$ * WIDTH $_{\text{TRANS}}^{\text{LONG}}$

$\left.\begin{array}{l} WIND_{TRANS} = 40\ Lbs/Ft^2 \\ WIND_{LONG} = 40\ Lbs/Ft^2 \end{array}\right\}$ BOTH FORCES SHALL BE APPLIED SIMULTANEOUSLY

- WALL_COLUMN SEC. 1

$WIND_{TRANS} = 0.040\ KSF * 3.00\ Ft = 0.120\ K/Ft$

$WIND_{LONG} = 0.040\ KSF * 77.00\ Ft = 3.08\ K/Ft$

- WALL COLUMN SEC. 2

$WIND_{TRANS} = 0.040\ KSF * 2.50\ Ft = 0.100\ K/Ft$

$WIND_{LONG} = 0.040\ KSF * (76.00' + 65.560') = 0.831\ K/Ft$

- WIND ON LIVE LOAD

WIND ON LIVE LOAD = W LIVE LOAD_TRANS
– LONG

POINT OF APPLICATION = 6.00' FROM FLOOR SLAB

$W_{LL_TRANS} = 100$ Lbs/Ft
$W_{LL_LONG} = 40$ Lbs/Ft } BOTH FORCES SHALL BE APPLIED SIMULTANEOUSLY

DISTANCE TO LOAD $= 4.50\,Ft + \frac{0.5''}{12} + \frac{7.50''}{12} + 6.00\,Ft =$

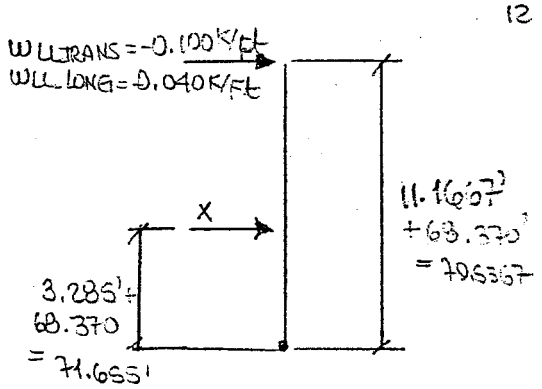

EQUIVALENT FORCES:

$W_{LL\,TRANS} = -0.100 * \frac{79.537}{71.655} = -0.111$ K/Ft

1.11 = 11.10 Kips ×100

$W_{LL\,LONG} = 0.040 * 1.11 = 0.0444$ K/Ft

- LONGITUDINAL FORCES FROM LIVE LOAD

L.F. LIVE LOAD = 5% NO. OF LANES [R.F. * (0.640 * LENGTH + 18 K)]

POINT OF APPLICATION = 6.00 Ft ABOVE THE FLOOR SLAB

NO. LANES = 31.00' ÷ 12 = 2.58 lanes Use 2 lanes +2 = 4 lanes (TOTAL WIDTH)

L.F. = 0.05 * 2 LANES * 1.00 * 0.640 K/Ft = 0.064 K/Ft * 1.11 = 0.07104 K/Ft

L.F. = 0.05 * 2 LANES * 1.00 * 18 K/Ft * 0.20 = 0.36 Kips * 1.11 = 0.3996 Kips

DISTRIBUTED @ THE 5 PIERS

CASE 3 - PIER SCOUR

SOIL SPRING CONSTANTS

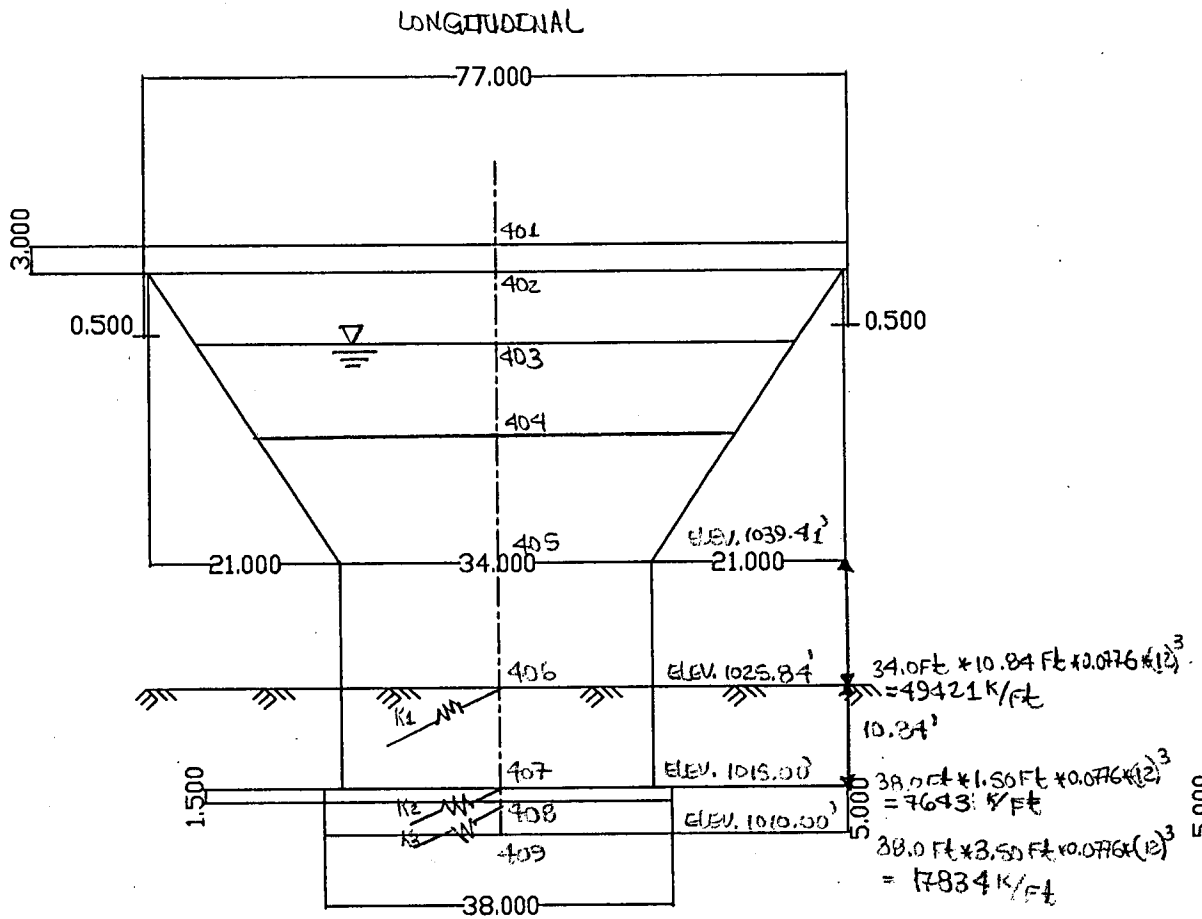

ELEVATION

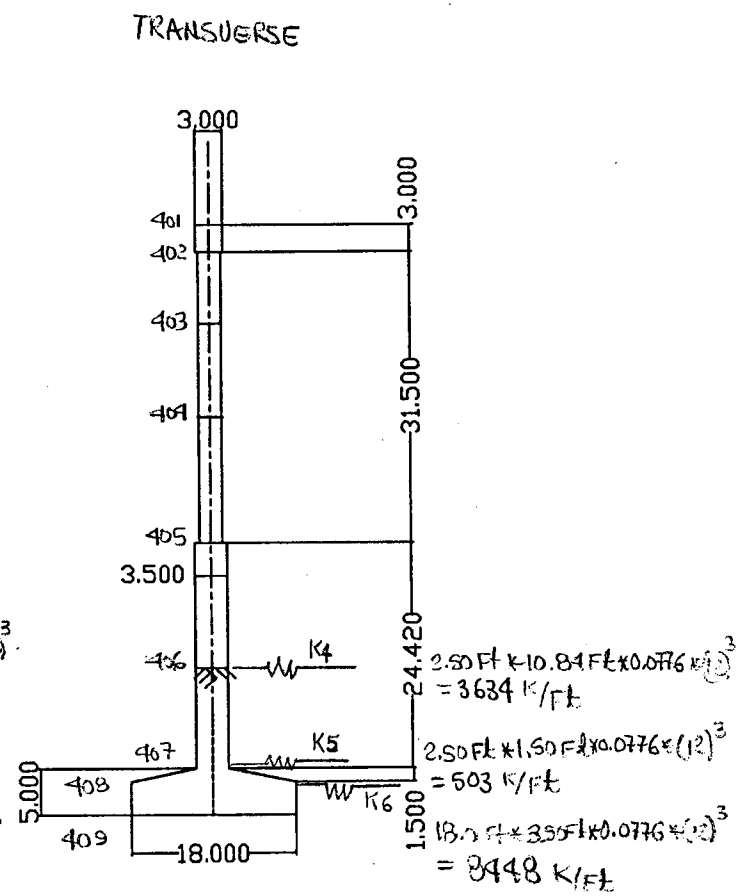

SECTION

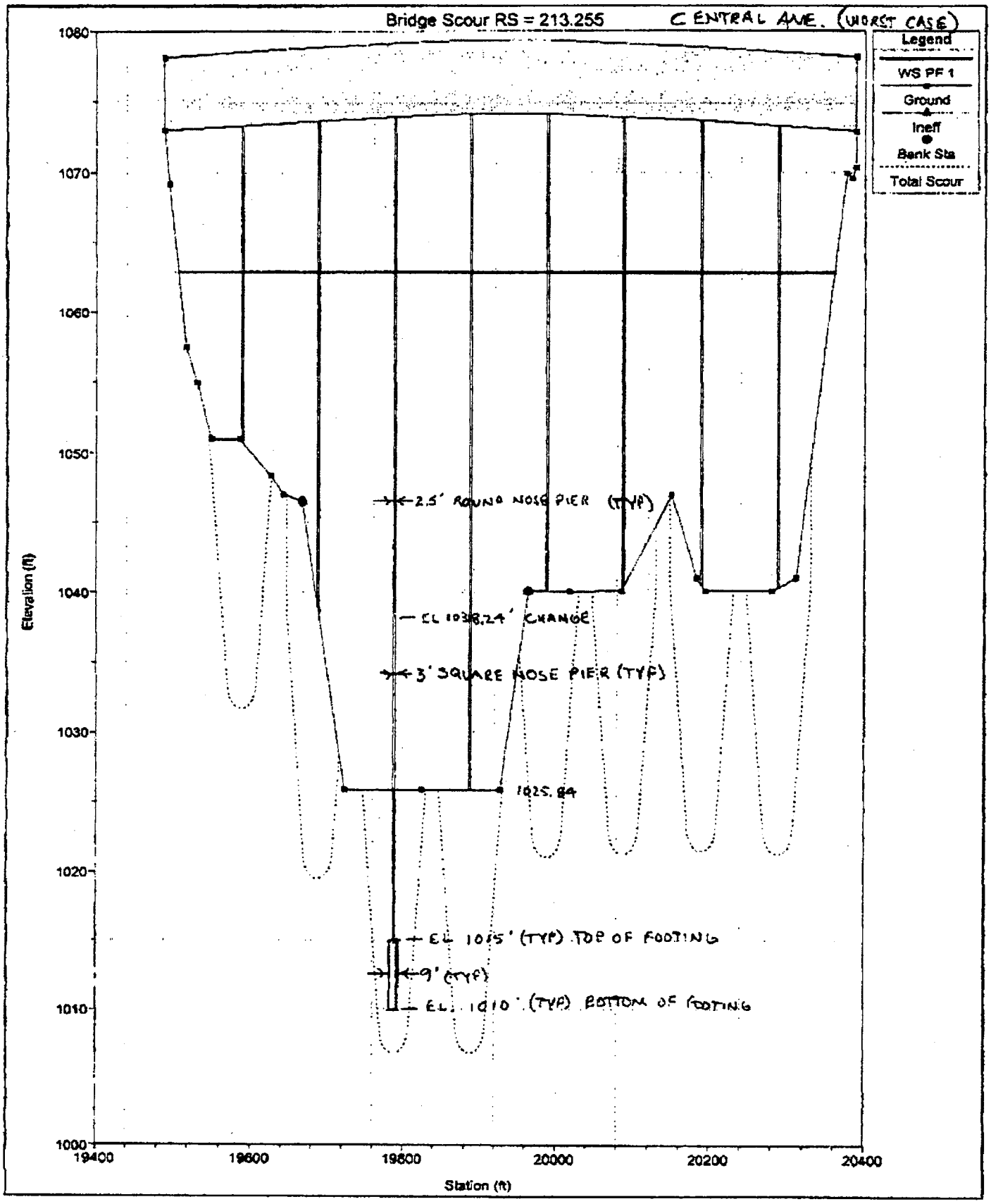
Bridge Scour RS = 213.255
CENTRAL AVE. (WORST CASE)
Legend
WS PF 1
Ground
Ineff
Bank Sta
Total Scour
Elevation (ft)
Station (ft)
1080
1070
1060
1050
1040
1030
1020
1010
1000
19400
19600
19800
20000
20200
20400
2.5' ROUND NOSE PIER (TYP)
EL 1038.24' CHANGE
3' SQUARE NOSE PIER (TYP)
1025.84
EL 1015' (TYP) TOP OF FOOTING
9' (TYP)
EL. 1010' (TYP) BOTTOM OF FOOTING

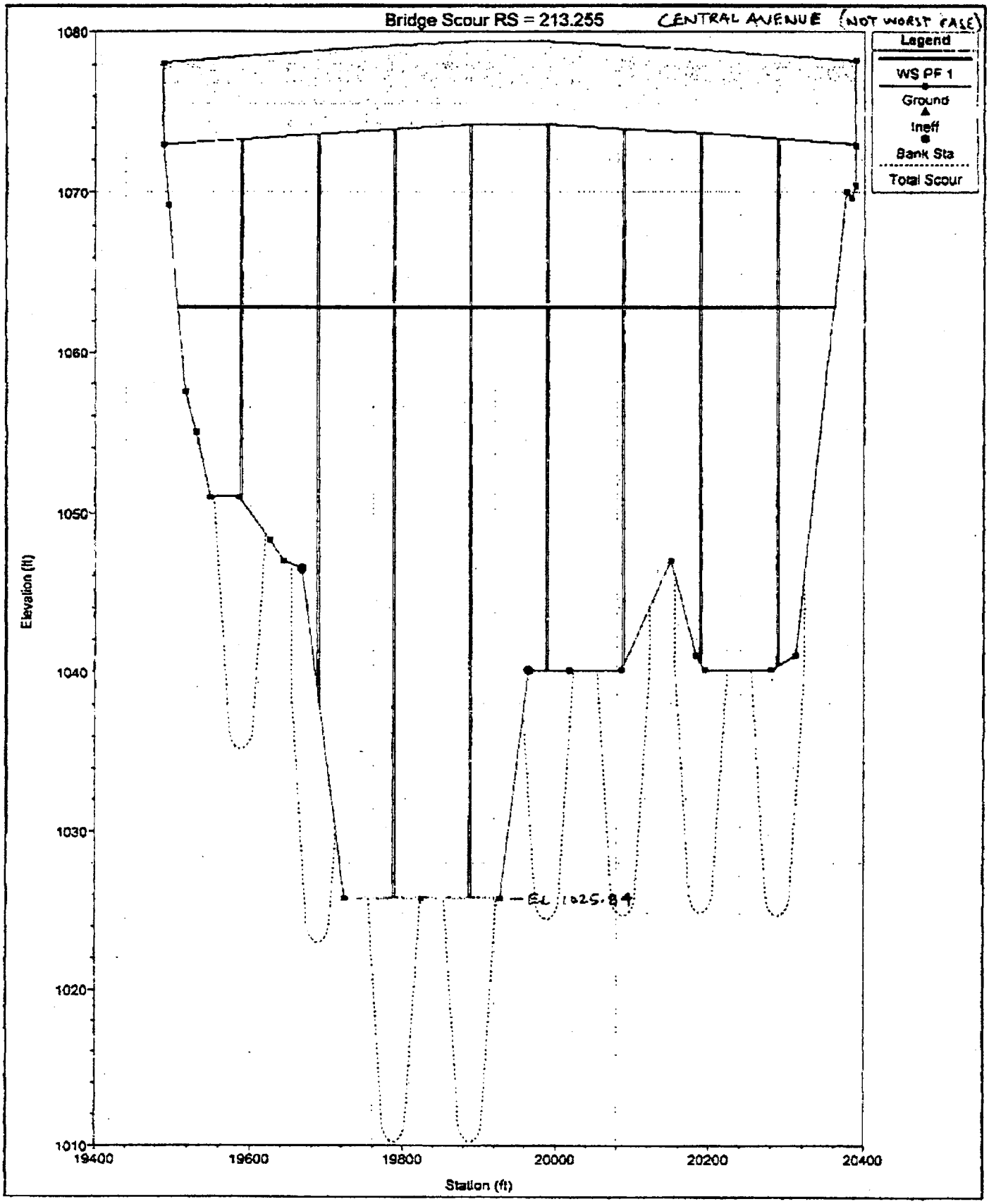
Bridge Scour RS = 213.255
CENTRAL AVENUE (NOT WORST CASE)
Legend
WS PF 1
Ground
Ineff
Bank Sta
Total Scour
EL 1025.84
Elevation (ft)
Station (ft)
1080
1070
1060
1050
1040
1030
1020
1010
19400
19600
19800
20000
20200
20400

Alternative 1 Bridge Scour With Long Term Degradation, River Station 213.255, Central Avenue Bridge

Results Computed Using HEC-RAS Version 2.2 and HEC-18 Guidelines

Hydraulic Design Data

Pier Scour

All piers have the same scour depth

Input Data

Pier Shape:	Round nose
Pier Width (ft):	6.5
Grain Size D50 (ft):	0.0787
Depth Upstream (ft):	37.24
Velocity Upstream (ft/s):	14.33 maximum velocity
K1 Nose Shape:	1
Pier Angle:	0
Pier Length (ft):	151.22
K2 Angle Coef:	1
K3 Bed Cond Coef:	1.1
Grain Size D90 (ft):	0.5741
K4 Armouring Coef:	1

Results

Scour Depth Ys (ft):	**15.6**
Froude #:	0.41
Equation:	CSU equation

Pier Scour Limited to Maximum of Ys = 2.4 * a

Alternative case analysis:

Yf	Y1	Yf/Y >>	Vf/V1	V1	Vf
12.4	37.24	0.3330	0.82	14.33	11.75

Hydraulic Design Data

Pier Scour

All piers have the same scour depth

Input Data

Pier Shape:	Square nose
Pier Width (ft):	7
Grain Size D50 (ft):	0.0787
Depth Upstream (ft):	37.24
Velocity Upstream (ft/s):	11.75
K1 Nose Shape:	1.1
Pier Angle:	0
Pier Length (ft):	151.22
K2 Angle Coef:	1
K3 Bed Cond Coef:	1.1
Grain Size D90 (ft):	0.5741
K4 Armouring Coef:	1

Results

Scour Depth Ys (ft):	**19.1**
Froude #:	0.34
Equation:	CSU equation

Note: Two feet of bulking is added to each side of piers less than 6' wide.

STREAM FLOW FORCES

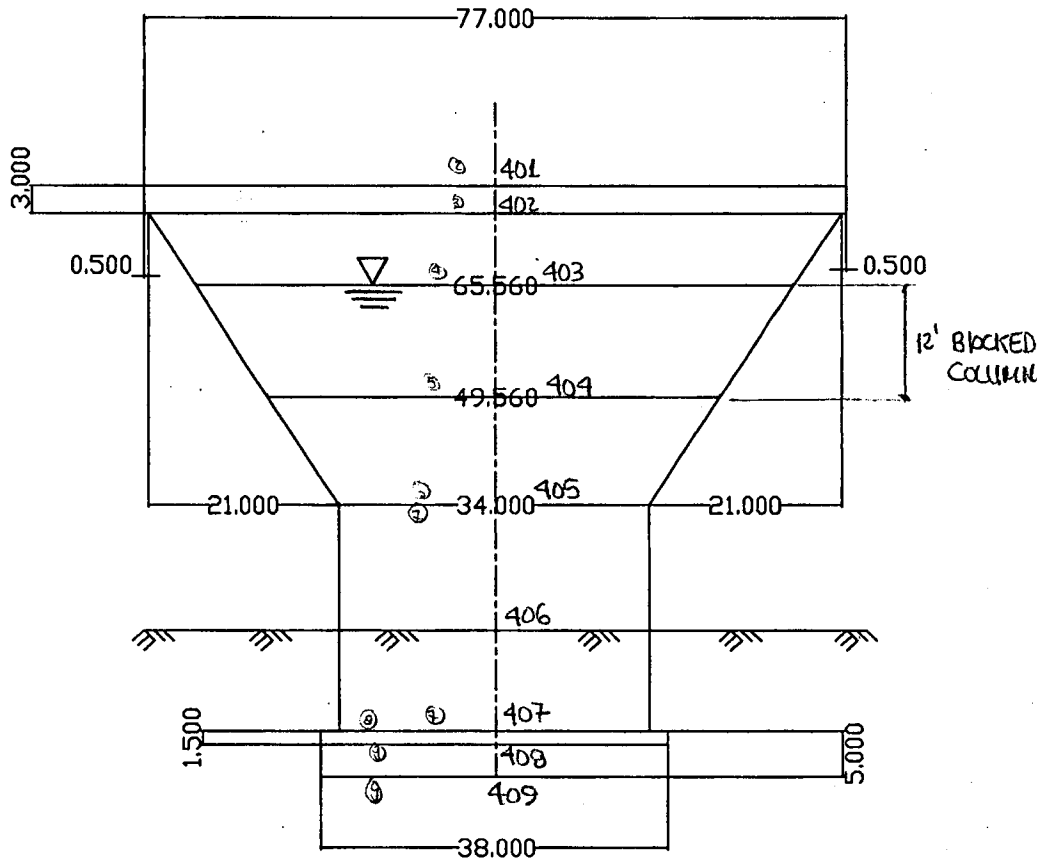

ELEVATION

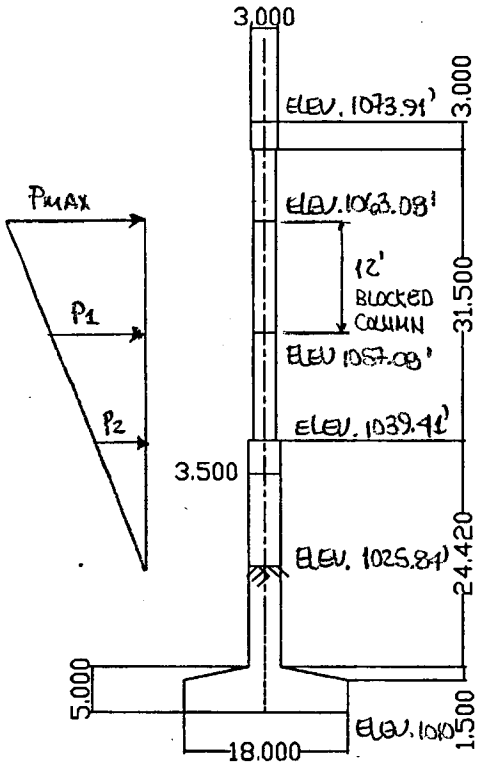

SECTION

T.Y. LIN INTERNATIONAL

Project:	Salt River Bridges - Scour	Job No.	1317.00	Sheet:	
Item:	South Central Avenue	Designer:	VPD	Date:	10/19/99
	Case 1 - General Scour - (Existing Conditions)	Checker:		Date:	

FORCE OF STREAM CURRENT ON PIERS: (AASHTO Art. 3.18.1 & ADOT BD&D Sec. 1.2.1)

MEAN VELOCITY, V = 14.33 FT/SEC
ANGLE OF ATTACK = 15 DEGREES

STREAM PRESSURE: (AASHTO Art. 3.18.1.1)

The effect of flowing water on piers and drift build-up, assuming a second-degree parabolic velocity distribution and thus a triangular pressure distribution, shall be calculated by the formula:

$$P_{avg} = K\,(V_{avg})^2 \qquad \text{(AASHTO Eqn. 3-4)}$$

where: P_{avg} = Average Stream Pressure, in pounds per square foot
V_{avg} = Average Velocity of water in feet per second
K = A Constant, 1.4 for all piers subjected to drift build-up

V_{avg} long = **3.71** ft/sec V_{avg} trans = **13.84** ft/sec

The maximum Stream Flow Pressure, P_{max}, shall be equal to twice the Average Stream Flow Pressure, P_{avg}, computed by Equation 3-4. Stream Flow Pressure shall be a triangular distribution with P_{max} located at the top of water elevation and a zero pressure located at the flow line.

$$P_{max} = 2 * K\,(V_{avg})^2 \qquad \text{where:} \qquad K = 1.4$$

P_{max} long = **38.52** psf P_{max} trans = **536.46** psf

BUOYANCY:

@ HWL =	62.40 kcf	65.60 ft	2.50 ft	=	10.23	k/ft	upward force
@ 12' BELLOW =	62.40 kcf	49.56 ft	2.50 ft	=	7.73	k/ft	upward force
@ CONST JT (Top) =	62.40 kcf	34.00 ft	2.50 ft	=	5.30	k/ft	upward force
@ CONST JT (Bot) =	62.40 kcf	34.00 ft	3.50 ft	=	7.43	k/ft	upward force

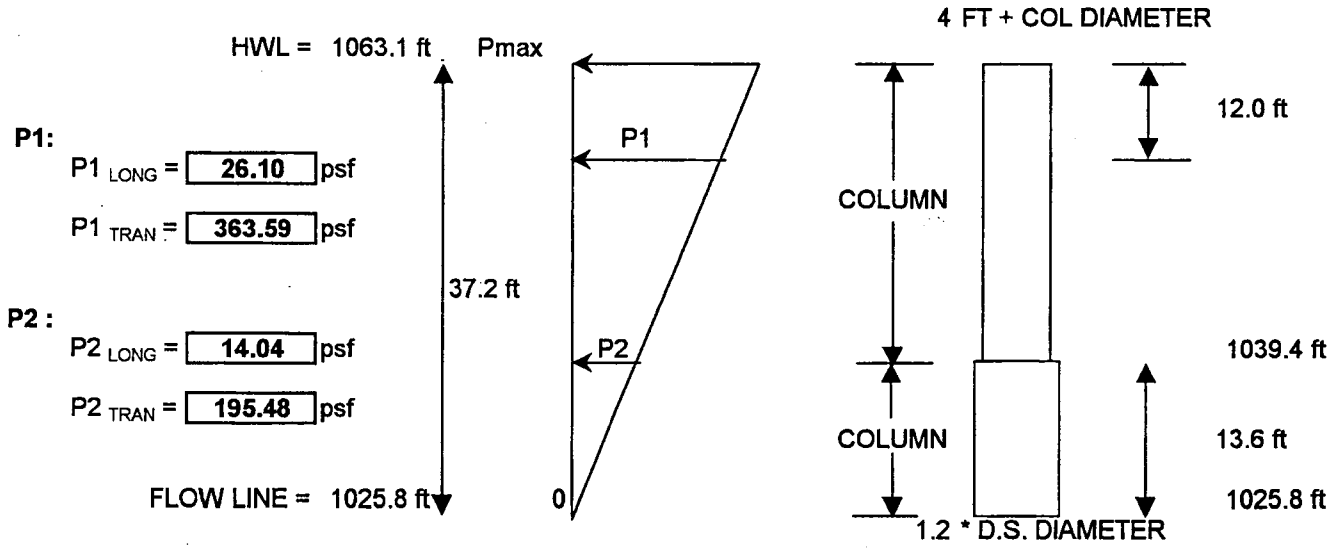

TYLIN INTERNATIONAL

Project: Salt River Bridges - Scour | Job No. 1317.00 | Sheet: of
Item: South Central Avenue | Designer: VPD | Date: 10/18/99
Checker: | Date:
Order: 1-10"

STREAM FLOW FORCES

LONGITUDINAL

BLOCKED COLUMN: @ 0.0' 0.03852 KSF * 65.560 Ft = 2.525 K/Ft
@ 12.0' 0.02610 KSF * 49.560 Ft = 1.294 K/Ft

COLUMN @12.0' 0.02610 KSF * 49.560 Ft = 1.294 K/Ft
@ 23.57' 0.01404 KSF * 34.00 Ft = 0.477 K/Ft
@ 37.24' 0.000 KSF * 34.00 Ft = 0.00 K/Ft

TRANSVERSE

BLOCKED COLUMN: @ 0.0' 0.53646 KSF * (2.50 + 2*2) = 3.487 K/Ft
@12.0' 0.36359 KSF * (2.50 + 2*2) = 2.363 K/Ft

COLUMN @12.0' 0.36359 KSF * 2.50 Ft = 0.909 K/Ft
@25.57' 0.19548 KSF * 2.50 Ft = 0.489 K/Ft
@25.57' 0.19548 KSF * 3.50 Ft = 0.684 K/Ft.
@ 37.24' 0.000 KSF * 3.50 Ft = 0.00 K/Ft

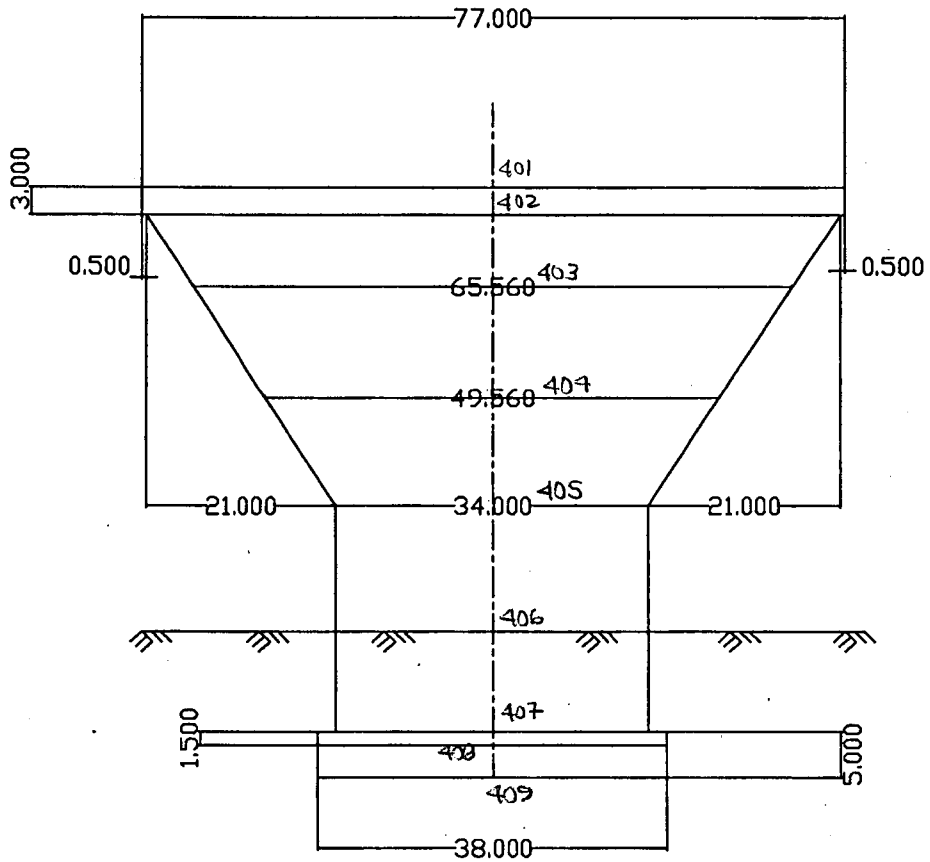

ELEVATION

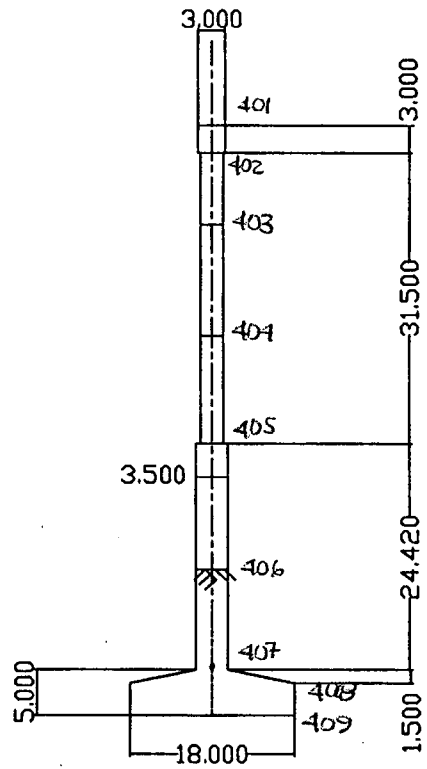

SECTION

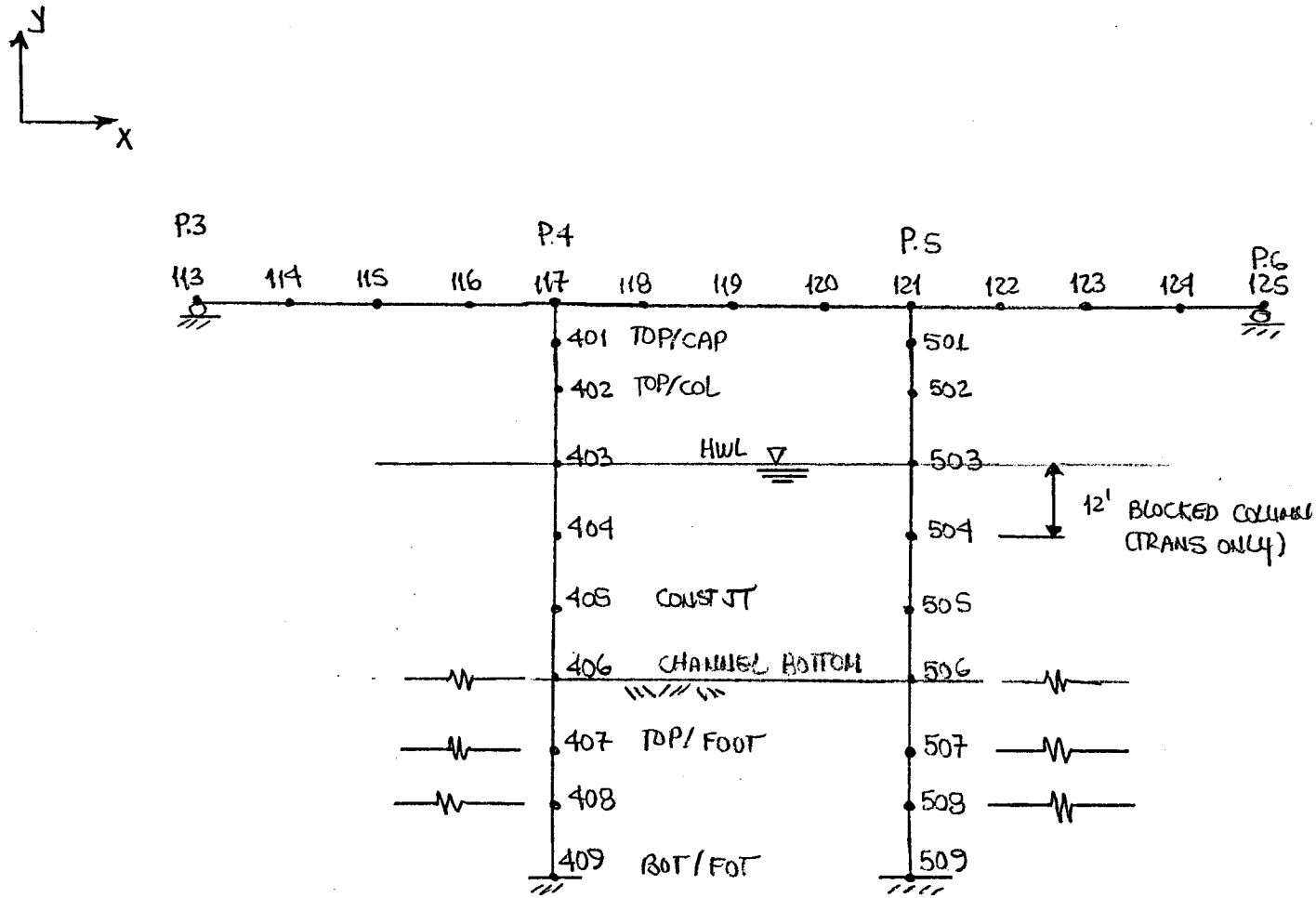

LONGITUDINAL NODAL NOMENCLATURE

PBI INTERNATIONAL

Project: Salt River Bridges - Scour
Item: South Central Avenue Bridge
Job No. 1317.00
Designer: VPD
Date: 10/20/99
Sheet
Checked
Date
Chkd. by

```
SALT RIVER BRIDGES - SCOUR  (SOUTH CENTRAL AVENUE BRIDGE)   "SC_AVELO"
C
C UNITS: KIPS, FEET, SECONDS
C
SYSTEM
C LOAD CONDITION 1, DEAD LOAD
C LOAD CONDITION 2, WIND ON STRUCTURE (TRANSVERSE, LONGITUDINAL & OVERTURNING) SU
PER
C LOAD CONDITION 3, WIND ON STRUCTURE (TRANSVERSE, LONGITUDINAL) SUB
C LOAD CONDITION 4, WIND ON LIVE LOAD
C LOAD CONDITION 5, LONGITUDINAL FORCE DUE TO LIVE LOAD
C LOAD CONDITION 6, STREAM FORCE ON COLUMN
C LOAD CONDITION 7, TEMPERATURE
C
L=7
C
JOINTS
C   CL OF SUPERSTRUCTURE
113  X=300.00  Y=1078.37  Z=0.00
114  X=325.00  Y=1078.37  Z=0.00
115  X=350.00  Y=1078.37  Z=0.00
116  X=375.00  Y=1078.37  Z=0.00
117  X=400.00  Y=1078.37  Z=0.00
118  X=425.00  Y=1078.37  Z=0.00
119  X=450.00  Y=1078.37  Z=0.00
120  X=475.00  Y=1078.37  Z=0.00
121  X=500.00  Y=1078.37  Z=0.00
122  X=525.00  Y=1078.37  Z=0.00
123  X=550.00  Y=1078.37  Z=0.00
124  X=575.00  Y=1078.37  Z=0.00
125  X=600.00  Y=1078.37  Z=0.00
C   PIER 4 - CAP
401  X=400.00  Y=1073.91  Z=0.00
C   PIER 4 - COLUMN
402  X=400.00  Y=1070.91  Z=0.00
403  X=400.00  Y=1063.08  Z=0.00
404  X=400.00  Y=1051.08  Z=0.00
405  X=400.00  Y=1039.42  Z=0.00
406  X=400.00  Y=1025.84  Z=0.00
407  X=400.00  Y=1015.00  Z=0.00
408  X=400.00  Y=1013.50  Z=0.00
409  X=400.00  Y=1010.00  Z=0.00
C   PIER 5 - CAP
501  X=500.00  Y=1073.91  Z=0.00
C   PIER 5 - COLUMN
502  X=500.00  Y=1070.91  Z=0.00
503  X=500.00  Y=1063.08  Z=0.00
504  X=500.00  Y=1051.08  Z=0.00
505  X=500.00  Y=1039.42  Z=0.00
506  X=500.00  Y=1025.84  Z=0.00
507  X=500.00  Y=1015.00  Z=0.00
508  X=500.00  Y=1013.50  Z=0.00
509  X=500.00  Y=1010.00  Z=0.00

RESTRAINTS
C   PIER 3
113  R=0 1 1 1 1 0          :ROLLER
C   PIER 4
117  R=0 0 1 1 1 0
C 401  408 1 R=0 0 1 1 1 0
409  R=1 1 1 1 1 1
C   PIER 5
121  R=0 0 1 1 1 0
C 501  508 1 R=0 0 1 1 1 0
509  R=1 1 1 1 1 1
C   PIER 6
```



```
125  R=0 1 1 1 1 0          :ROLLER

SPRINGS
C
406 K=49421,0,0,0,0,0
407 K= 7643,0,0,0,0,0
408 K=17834,0,0,0,0,0
506 K=49421,0,0,0,0,0
507 K= 7643,0,0,0,0,0
508 K=17834,0,0,0,0,0

FRAMES
C
NM=10   NL=13  Y=-1 0 0 0 0 0 0
C
C  ALL MATERIALS CONCRETE:
C  ROADWAY, 4'-6" DEEP BY 81'-0" WIDE TYPE IV AASHTO GIRDER,
C  ADDITIONAL WEIGHT/MASSS EQUIVALENT TO 2.8" BY 81'-0" CONCRETE INCLUDED TO
C  ACCOUNT FOR FUTURE WEARING SURFACE AND BARRIERS.
C SUPERSTRUCTURE, 81'-0" BY 4'-6"
1  A=117.208 I=345.854,56092.  J=37.475 AS=117.208,117.208 E=594726 TC=6E-6 W=20.
453
C TOP PIER, 77'-0" BY 3'-0"
2  A=231.000 I=173.250,114133. J=692.31 AS=231.000,231.000 E=449571 TC=6E-6 W=34.
650
C TOP WALL COLUMN, 76'-0" BY 2'-6"
3  A=190.000 I= 98.960,91453.3 J=395.44 AS=190.000,190.000 E=449571 TC=6E-6 W=28.
500
C HWL, 65'-6 3/4" BY 2'-6"
4  A=163.892 I= 85.361,70749.  J=341.10 AS=163.892,163.892 E=449571 TC=6E-6 W=24.
584
C BLOCKED COLUMN, 49'-6 3/4" BY 2'-6"
5  A=123.879 I= 64.520,39019.  J=257.82 AS=123.879,123.879 E=449571 TC=6E-6 W=18.
582
C CONST JOINT - WALL COLUMN, 34'-0" BY 2'-6"
6  A= 85.000 I= 44.270,8188.   J=176.91 AS= 85.000, 85.000 E=449571 TC=6E-6 W=12.
750
C CONST JOINT - BELOW, 34'-0" BY 3'-6"
7  A=119.000 I=121.480,11464.  J=485.43 AS=119.000,119.000 E=449571 TC=6E-6 W=17.
850
C TOP EXISTING FOOTING, 38'-0" BY 3'-6"
8  A=133.000 I=135.771,16004.  J=542.54 AS=133.000,133.000 E=449571 TC=6E-6 W=19.
950
C BOTTOM EXISTING FOOTING, 38'-0" BY 18'-0"
9  A=684.000 I=18468.,82380.   J=73798. AS=684.000,684.000 E=449571 TC=6E-6 W=102
.60
C RIGID MEMBER LINK, 39'2" BY 3'-6"
10 A=117.208 I=345.854,56092.  J=37.475 AS=117.208,117.208 E=594726 TC=6E-6 W=0.0
00
C
C Load Case I SDL (Int & Pier Diaph Load)
1  PLD= 0.000   -68.717  0
2  PLD=25.000   -68.717  0
3  PLD= 0.000   -23.684  0
C
C Load Case II LL+I (4 Lanes)
4  PLD= 0.000  -243.422  0
C
C Load Case III WIND LOAD ON STRUCTURE
C
C wind on superstructure is load #5
C tran: 50 psf on 9.667' height (GLOBAL Y DIR)
C long: 12 psf on 9.667' height (GLOBAL X DIR)
C
5  WL=0.119  0.000   0.000
C
```

```
C wind on substructure is load #6 & #7
C Fixed Pier Cap
C tran: 40 psf on  3.00' width (axis 3 - Y DIR)
C long: 40 psf on 77.00' width (axis 2 - X DIR)
C
6  WG=3.080   0.000   0.000
C
C Column
C tran: 40 psf on  2.50' width (axis 3 - Y DIR)
C long: 40 psf on 70.78' width (axis 2 - X DIR)
C
7  WG=2.831  0.000  0.000
C
C Load Case IV WIND LOAD ON LIVE LOAD
C
C wind on live load is load #8
C tran: 100 plf at 6' above deck plus half girder depth (axis 3 - Y DIR)
C long:  40 plf at 6' above deck plus half girder depth (axis 1 - X DIR)
C
8  WL= 0.044  0.000  0.000
C
C Load Case V LONGITUDINAL FORCE ON LIVE LOAD
C
C longitudinal force on live load is load #9
C long: 0.05*no.lanes*(Red.Factor*0.640k/ft) at 6' above deck
C       plus half girder depth (X-DIR)
C       0.05*no.lanes*(Red.Factor*18.0kip)*0.5(distributed at the piers only)
C       at 6' above deck plus half girder depth (X-DIR)
C
9  WL= 0.071  0.000   0.000
C
C Load Case VI STREAM FORCE
C
C Blocked Column - 65.56' by 2.5'
10 TRAP=0.0 2.525 3.487 -1.00 1.294 2.363
C Column - 49.56' by 2.5'
11 TRAP=0.0 1.294 0.909 -1.00 0.477 0.489
C Wall Column Const Jt - 34' by 2.5'
12 TRAP=0.0 0.477 0.684 -1.00 0.000 0.000
C
C Load Case VII TEMPERATURE
13 T=-40,0,0
C
C SPAN 4
113,113,114  LP=1,0          M=1   NSL=1  0  5  8  9   0  13
114,114,115                  M=1   NSL=0  0  5  8  9   0  13
115,115,116                  M=1   NSL=3  0  5  8  9   0  13
116,116,117                  M=1   NSL=0  0  5  8  9   0  13
C SPAN 5
117,117,118                  M=1   NSL=1  4  5  8  9   0  13
118,118,119                  M=1   NSL=0  0  5  8  9   0  13
119,119,120                  M=1   NSL=3  0  5  8  9   0  13
120,120,121                  M=1   NSL=0  0  5  8  9   0  13
C SPAN 6
121,121,122                  M=1   NSL=1  4  5  8  9   0  13
122,122,123                  M=1   NSL=0  0  5  8  9   0  13
123,123,124                  M=1   NSL=3  0  5  8  9   0  13
124,124,125                  M=1   NSL=2  0  5  8  9   0  13
C PIER 4 - SUPER TO CAP
400,117,401  LR=1 0 0 0 0 0  M=10
C PIER 4 - CAP
401,401,402                  M=2   NSL=0  0  6  0  0   0  13
C PIER 4 - COLUMN
402,402,403                  M=3,4 NSL=0  0  7  0  0   0  13
403,403,404                  M=4,5 NSL=0  0  0  0  0  10  13
404,404,405                  M=5,6 NSL=0  0  0  0  0  11  13
```



```
405,405,406                  M=7   NSL=0  0  0  0  0  12  13
406,406,407                  M=7,7 NSL=0  0  0  0  0   0  13
407,407,408                  M=8,9 NSL=0  0  0  0  0   0  13
408,408,409                  M=9,9 NSL=0  0  0  0  0   0  13
C PIER 5 - SUPER TO CAP
500,121,501  LR=1 0 0 0 0 0  M=10
C PIER 5 - CAP
501,501,502                  M=2   NSL=0  0  6  0  0   0  13
C PIER 5 - COLUMN
502,502,503                  M=3,4 NSL=0  0  7  0  0   0  13
503,503,504                  M=4,5 NSL=0  0  0  0  0  10  13
504,504,505                  M=5,6 NSL=0  0  0  0  0  11  13
505,505,506                  M=7   NSL=0  0  0  0  0  12  13
506,506,507                  M=7,7 NSL=0  0  0  0  0   0  13
507,507,508                  M=8,9 NSL=0  0  0  0  0   0  13
508,508,509                  M=9,9 NSL=0  0  0  0  0   0  13
C
LOADS
C Load Case V LONGITUDINAL FORCE ON LIVE LOAD
117  L=5  F=0.400, 0.000, 0.000, 0.000, 0.000, 0.000
121  L=5  F=0.400, 0.000, 0.000, 0.000, 0.000, 0.000
```

```
     $$$$$$$$     $$$$$$$$$$    $$$$$$$       $$$$$$$$       $$$$$$$
   $$$$$$$$$$    $$$$$$$$$$    $$$$$$$$$$    $$$$$$$$$$    $$$$$$$$$$
  $$            $$      $$    $$       $$   $$       $$    $$       $$
 $$            $$      $$    $$       $$   $$       $$    $$       $$
 $$$$$$$$     $$$$$$$$$$    $$$$$$$$$$     $$$$$$$$$$    $$       $$
      $$    $$      $$    $$                     $$    $$       $$
      $$    $$      $$    $$                     $$    $$       $$
$$$$$$$$$$    $$      $$    $$             $$$$$$$$$$    $$$$$$$$$$
$$$$$$$$     $$      $$    $$             $$$$$$$$       $$$$$$$
```

STRUCTURAL ANALYSIS PROGRAMS

VERSION P5.31

Copyright (C) 1978-1991
EDWARD L. WILSON
All rights reserved

C S I / S A P 9 0 - - FINITE ELEMENT ANALYSIS OF STRUCTURES PAGE 1
PROGRAM:SAP90/FILE:sc_avelo.F3F
SALT RIVER BRIDGES - SCOUR (SOUTH CENTRAL AVENUE BRIDGE) "SC_AVELO"

F R A M E E L E M E N T F O R C E S

ELT ID	LOAD COND	DIST ENDI	1-2 PLANE SHEAR	1-2 PLANE MOMENT	AXIAL FORCE	1-3 PLANE SHEAR	1-3 PLANE MOMENT	AXIAL TORQ
113								
	1	0.00			0.00			
		0.00	827.42	0.00				
		25.00	316.10	14293.94				
		25.00			0.00			
	2	0.00			0.00			
		0.00	0.07	0.00				
		25.00	0.07	1.65				
		25.00			0.00			
	3	0.00			0.00			
		0.00	0.00	0.00				
		25.00	0.00	0.00				
		25.00			-2.97			
	4	0.00			0.00			
		0.00	0.00	0.00				
		25.00	0.00	0.00				
		25.00			-1.10			
	5	0.00			0.00			
		0.00	0.00	0.00				
		25.00	0.00	0.00				
		25.00			-1.77			
	6	0.00			0.00			
		0.00	0.00	0.00				
		25.00	0.00	0.00				
		25.00			0.00			
	7	0.00			0.00			
		0.00	3.78	0.00				
		25.00	3.78	94.53				
		25.00			0.00			
114								
	1	0.00			0.00			
		0.00	316.10	14293.94				
		15.45	0.00	16736.52				
		25.00	-195.23	15804.76				
		25.00			0.00			
	2	0.00			0.00			
		0.00	0.07	1.65				
		25.00	0.07	3.30				
		25.00			0.00			
	3	0.00			-2.97			
		0.00	0.00	0.00				

C S I / S A P 9 0 - - FINITE ELEMENT ANALYSIS OF STRUCTURES PAGE 2
PROGRAM:SAP90/FILE:sc_avelo.F3F
SALT RIVER BRIDGES - SCOUR (SOUTH CENTRAL AVENUE BRIDGE) "SC_AVELO"

F R A M E E L E M E N T F O R C E S

ELT ID	LOAD COND	DIST ENDI	1-2 PLANE SHEAR	1-2 PLANE MOMENT	AXIAL FORCE	1-3 PLANE SHEAR	1-3 PLANE MOMENT	AXIAL TORQ
		25.00	0.00	0.00				
		25.00			-5.95			
	4	0.00			-1.10			
		0.00	0.00	0.00				
		25.00	0.00	0.00				
		25.00			-2.20			
	5	0.00			-1.77			
		0.00	0.00	0.00				
		25.00	0.00	0.00				
		25.00			-3.55			
	6	0.00			0.00			
		0.00	0.00	0.00				
		25.00	0.00	0.00				
		25.00			0.00			
	7	0.00			0.00			
		0.00	3.78	94.53				
		25.00	3.78	189.07				
		25.00			0.00			
115								
	1	0.00			0.00			
		0.00	-218.91	15804.76				
		25.00	-730.24	3940.35				
		25.00			0.00			
	2	0.00			0.00			
		0.00	0.07	3.30				
		25.00	0.07	4.96				
		25.00			0.00			
	3	0.00			-5.95			
		0.00	0.00	0.00				
		25.00	0.00	0.00				
		25.00			-8.93			
	4	0.00			-2.20			
		0.00	0.00	0.00				
		25.00	0.00	0.00				
		25.00			-3.30			
	5	0.00			-3.55			
		0.00	0.00	0.00				
		25.00	0.00	0.00				
		25.00			-5.32			
	6	0.00			0.00			
		0.00	0.00	0.00				

C S I / S A P 9 0 - - FINITE ELEMENT ANALYSIS OF STRUCTURES PAGE 3
PROGRAM:SAP90/FILE:sc_avelo.F3F
SALT RIVER BRIDGES - SCOUR (SOUTH CENTRAL AVENUE BRIDGE) "SC_AVELO"

F R A M E E L E M E N T F O R C E S

ELT ID	LOAD COND	DIST ENDI	1-2 PLANE SHEAR	1-2 PLANE MOMENT	AXIAL FORCE	1-3 PLANE SHEAR	1-3 PLANE MOMENT	AXIAL TORQ
		25.00	0.00	0.00				
		25.00			0.00			
	7	0.00			0.00			
		0.00	3.78	189.07				
		25.00	3.78	283.60				
		25.00			0.00			
116	----------							
	1	0.00			0.00			
		0.00	-730.24	3940.35				
		25.00	-1241.56	-20707.18				
		25.00			0.00			
	2	0.00			0.00			
		0.00	0.07	4.96				
		25.00	0.07	6.61				
		25.00			0.00			
	3	0.00			-8.93			
		0.00	0.00	0.00				
		25.00	0.00	0.00				
		25.00			-11.90			
	4	0.00			-3.30			
		0.00	0.00	0.00				
		25.00	0.00	0.00				
		25.00			-4.40			
	5	0.00			-5.32			
		0.00	0.00	0.00				
		25.00	0.00	0.00				
		25.00			-7.10			
	6	0.00			0.00			
		0.00	0.00	0.00				
		25.00	0.00	0.00				
		25.00			0.00			
	7	0.00			0.00			
		0.00	3.78	283.60				
		25.00	3.78	378.14				
		25.00			0.00			
117	----------							
	1	0.00			0.00			
		0.00	1034.49	-20707.17				
		25.00	523.17	-1236.44				
		25.00			0.00			
	2	0.00			0.00			

C S I / S A P 9 0 - - FINITE ELEMENT ANALYSIS OF STRUCTURES PAGE 4
PROGRAM:SAP90/FILE:sc_avelo.F3F
SALT RIVER BRIDGES - SCOUR (SOUTH CENTRAL AVENUE BRIDGE) "SC_AVELO"

F R A M E E L E M E N T F O R C E S

ELT ID	LOAD COND	DIST ENDI	1-2 PLANE SHEAR	1-2 PLANE MOMENT	AXIAL FORCE	1-3 PLANE SHEAR	1-3 PLANE MOMENT	AXIAL TORQ
		0.00	0.00	6.61				
		25.00	0.00	6.61				
		25.00			0.00			
	3	0.00			5.95			
		0.00	0.00	0.01				
		25.00	0.00	0.00				
		25.00			2.97			
	4	0.00			2.20			
		0.00	0.00	0.00				
		25.00	0.00	0.00				
		25.00			1.10			
	5	0.00			3.55			
		0.00	0.00	0.00				
		25.00	0.00	0.00				
		25.00			1.77			
	6	0.00			0.00			
		0.00	0.00	0.00				
		25.00	0.00	0.00				
		25.00			0.00			
	7	0.00			6.68			
		0.00	0.00	378.14				
		25.00	0.00	378.14				
		25.00			6.68			
118	----------							
	1	0.00			0.00			
		0.00	523.17	-1236.44				
		25.00	11.84	5451.18				
		25.00			0.00			
	2	0.00			0.00			
		0.00	0.00	6.61				
		25.00	0.00	6.61				
		25.00			0.00			
	3	0.00			2.97			
		0.00	0.00	0.00				
		25.00	0.00	0.00				
		25.00			0.00			
	4	0.00			1.10			
		0.00	0.00	0.00				
		25.00	0.00	0.00				
		25.00			0.00			
	5	0.00			1.77			

C S I / S A P 9 0 - - FINITE ELEMENT ANALYSIS OF STRUCTURES PAGE 5
PROGRAM:SAP90/FILE:sc_avelo.F3F
SALT RIVER BRIDGES - SCOUR (SOUTH CENTRAL AVENUE BRIDGE) "SC_AVELO"

F R A M E E L E M E N T F O R C E S

ELT ID	LOAD COND	DIST ENDI	1-2 PLANE SHEAR	1-2 PLANE MOMENT	AXIAL FORCE	1-3 PLANE SHEAR	1-3 PLANE MOMENT	AXIAL TORQ
		0.00	0.00	0.00				
		25.00	0.00	0.00				
		25.00			0.00			
	6	0.00			0.00			
		0.00	0.00	0.00				
		25.00	0.00	0.00				
		25.00			0.00			
	7	0.00			6.68			
		0.00	0.00	378.14				
		25.00	0.00	378.14				
		25.00			6.68			
119								
	1	0.00			0.00			
		0.00	-11.84	5451.18				
		25.00	-523.17	-1236.44				
		25.00			0.00			
	2	0.00			0.00			
		0.00	0.00	6.61				
		25.00	0.00	6.61				
		25.00			0.00			
	3	0.00			0.00			
		0.00	0.00	0.00				
		25.00	0.00	0.00				
		25.00			-2.97			
	4	0.00			0.00			
		0.00	0.00	0.00				
		25.00	0.00	0.00				
		25.00			-1.10			
	5	0.00			0.00			
		0.00	0.00	0.00				
		25.00	0.00	0.00				
		25.00			-1.77			
	6	0.00			0.00			
		0.00	0.00	0.00				
		25.00	0.00	0.00				
		25.00			0.00			
	7	0.00			6.68			
		0.00	0.00	378.14				
		25.00	0.00	378.14				
		25.00			6.68			

C S I / S A P 9 0 - - FINITE ELEMENT ANALYSIS OF STRUCTURES PAGE 6
PROGRAM:SAP90/FILE:sc_avelo.F3F
SALT RIVER BRIDGES - SCOUR (SOUTH CENTRAL AVENUE BRIDGE) "SC_AVELO"

F R A M E E L E M E N T F O R C E S

ELT ID	LOAD COND	DIST ENDI	1-2 PLANE SHEAR	1-2 PLANE MOMENT	AXIAL FORCE	1-3 PLANE SHEAR	1-3 PLANE MOMENT	AXIAL TORQ
120								
	1	0.00			0.00			
		0.00	-523.17	-1236.44				
		25.00	-1034.49	-20707.17				
		25.00			0.00			
	2	0.00			0.00			
		0.00	0.00	6.61				
		25.00	0.00	6.61				
		25.00			0.00			
	3	0.00			-2.97			
		0.00	0.00	0.00				
		25.00	0.00	-0.01				
		25.00			-5.95			
	4	0.00			-1.10			
		0.00	0.00	0.00				
		25.00	0.00	0.00				
		25.00			-2.20			
	5	0.00			-1.77			
		0.00	0.00	0.00				
		25.00	0.00	0.00				
		25.00			-3.55			
	6	0.00			0.00			
		0.00	0.00	0.00				
		25.00	0.00	0.00				
		25.00			0.00			
	7	0.00			6.68			
		0.00	0.00	378.14				
		25.00	0.00	378.14				
		25.00			6.68			
121								
	1	0.00			0.00			
		0.00	1241.56	-20707.18				
		25.00	730.24	3940.35				
		25.00			0.00			
	2	0.00			0.00			
		0.00	-0.07	6.61				
		25.00	-0.07	4.96				
		25.00			0.00			
	3	0.00			11.90			
		0.00	0.00	0.00				
		25.00	0.00	0.00				

C S I / S A P 9 0 - - FINITE ELEMENT ANALYSIS OF STRUCTURES PAGE 7
PROGRAM:SAP90/FILE:sc_avelo.F3F
SALT RIVER BRIDGES - SCOUR (SOUTH CENTRAL AVENUE BRIDGE) "SC_AVELO"

F R A M E E L E M E N T F O R C E S

ELT ID	LOAD COND	DIST ENDI	1-2 PLANE SHEAR	1-2 PLANE MOMENT	AXIAL FORCE	1-3 PLANE SHEAR	1-3 PLANE MOMENT	AXIAL TORQ
		25.00			8.93			
	4	0.00			4.40			
		0.00	0.00	0.00				
		25.00	0.00	0.00				
		25.00			3.30			
	5	0.00			7.10			
		0.00	0.00	0.00				
		25.00	0.00	0.00				
		25.00			5.32			
	6	0.00			0.00			
		0.00	0.00	0.00				
		25.00	0.00	0.00				
		25.00			0.00			
	7	0.00			0.00			
		0.00	-3.78	378.14				
		25.00	-3.78	283.60				
		25.00			0.00			
122	----------							
	1	0.00			0.00			
		0.00	730.24	3940.35				
		25.00	218.91	15804.76				
		25.00			0.00			
	2	0.00			0.00			
		0.00	-0.07	4.96				
		25.00	-0.07	3.30				
		25.00			0.00			
	3	0.00			8.93			
		0.00	0.00	0.00				
		25.00	0.00	0.00				
		25.00			5.95			
	4	0.00			3.30			
		0.00	0.00	0.00				
		25.00	0.00	0.00				
		25.00			2.20			
	5	0.00			5.32			
		0.00	0.00	0.00				
		25.00	0.00	0.00				
		25.00			3.55			
	6	0.00			0.00			
		0.00	0.00	0.00				
		25.00	0.00	0.00				

C S I / S A P 9 0 - - FINITE ELEMENT ANALYSIS OF STRUCTURES PAGE 8
PROGRAM:SAP90/FILE:sc_avelo.F3F
SALT RIVER BRIDGES - SCOUR (SOUTH CENTRAL AVENUE BRIDGE) "SC_AVELO"

F R A M E E L E M E N T F O R C E S

ELT ID	LOAD COND	DIST ENDI	1-2 PLANE SHEAR	1-2 PLANE MOMENT	AXIAL FORCE	1-3 PLANE SHEAR	1-3 PLANE MOMENT	AXIAL TORQ
		25.00			0.00			
	7	0.00			0.00			
		0.00	-3.78	283.60				
		25.00	-3.78	189.07				
		25.00			0.00			
123	----------							
	1	0.00			0.00			
		0.00	195.23	15804.76				
		9.55	0.00	16736.52				
		25.00	-316.10	14293.94				
		25.00			0.00			
	2	0.00			0.00			
		0.00	-0.07	3.30				
		25.00	-0.07	1.65				
		25.00			0.00			
	3	0.00			5.95			
		0.00	0.00	0.00				
		25.00	0.00	0.00				
		25.00			2.97			
	4	0.00			2.20			
		0.00	0.00	0.00				
		25.00	0.00	0.00				
		25.00			1.10			
	5	0.00			3.55			
		0.00	0.00	0.00				
		25.00	0.00	0.00				
		25.00			1.77			
	6	0.00			0.00			
		0.00	0.00	0.00				
		25.00	0.00	0.00				
		25.00			0.00			
	7	0.00			0.00			
		0.00	-3.78	189.07				
		25.00	-3.78	94.53				
		25.00			0.00			
124	----------							
	1	0.00			0.00			
		0.00	-316.10	14293.94				
		25.00	-896.14	0.00				
		25.00			0.00			
	2	0.00			0.00			

C S I / S A P 9 0 - - FINITE ELEMENT ANALYSIS OF STRUCTURES PAGE 9
PROGRAM:SAP90/FILE:sc_avelo.F3F
SALT RIVER BRIDGES - SCOUR (SOUTH CENTRAL AVENUE BRIDGE) "SC_AVELO"

F R A M E E L E M E N T F O R C E S

ELT ID	LOAD COND	DIST ENDI	1-2 PLANE SHEAR	1-2 PLANE MOMENT	AXIAL FORCE	1-3 PLANE SHEAR	1-3 PLANE MOMENT	AXIAL TORQ
		0.00	-0.07	1.65				
		25.00	-0.07	0.00				
		25.00			0.00			
	3	0.00			2.97			
		0.00	0.00	0.00				
		25.00	0.00	0.00				
		25.00			0.00			
	4	0.00			1.10			
		0.00	0.00	0.00				
		25.00	0.00	0.00				
		25.00			0.00			
	5	0.00			1.77			
		0.00	0.00	0.00				
		25.00	0.00	0.00				
		25.00			0.00			
	6	0.00			0.00			
		0.00	0.00	0.00				
		25.00	0.00	0.00				
		25.00			0.00			
	7	0.00			0.00			
		0.00	-3.78	94.53				
		25.00	-3.78	0.00				
		25.00			0.00			
400	----------							
	1	0.00			-2344.77			
		0.00	0.00	-0.01				
		4.46	0.00	-0.01				
		4.46			-2344.77			
	2	0.00			-243.36			
		0.00	0.00	0.00				
		4.46	0.00	0.00				
		4.46			-243.36			
	3	0.00			0.00			
		0.00	17.85	-0.01				
		4.46	17.85	79.60				
		4.46			0.00			
	4	0.00			0.00			
		0.00	6.60	0.00				
		4.46	6.60	29.43				
		4.46			0.00			
	5	0.00			0.00			

C S I / S A P 9 0 - - FINITE ELEMENT ANALYSIS OF STRUCTURES PAGE 10
PROGRAM:SAP90/FILE:sc_avelo.F3F
SALT RIVER BRIDGES - SCOUR (SOUTH CENTRAL AVENUE BRIDGE) "SC_AVELO"

F R A M E E L E M E N T F O R C E S

ELT ID	LOAD COND	DIST ENDI	1-2 PLANE SHEAR	1-2 PLANE MOMENT	AXIAL FORCE	1-3 PLANE SHEAR	1-3 PLANE MOMENT	AXIAL TORQ
		0.00	11.05	0.00				
		4.46	11.05	49.28				
		4.46			0.00			
	6	0.00			0.00			
		0.00	0.00	0.00		-33.96	513.24	
		4.46	0.00	0.00		-33.96	361.77	
		4.46			0.00			
	7	0.00			3.78			
		0.00	6.68	0.00				
		4.46	6.68	29.80				
		4.46			3.78			
401	----------							
	1	0.00			-2344.77			
		0.00	0.00	-0.01				
		3.00	0.00	0.00				
		3.00			-2448.72			
	2	0.00			-243.36			
		0.00	0.00	0.00				
		3.00	0.00	0.00				
		3.00			-243.36			
	3	0.00			0.00			
		0.00	17.85	79.60				
		3.00	27.09	147.01				
		3.00			0.00			
	4	0.00			0.00			
		0.00	6.60	29.43				
		3.00	6.60	49.23				
		3.00			0.00			
	5	0.00			0.00			
		0.00	11.05	49.28				
		3.00	11.05	82.43				
		3.00			0.00			
	6	0.00			0.00			
		0.00	0.00	0.00		-33.96	361.77	
		3.00	0.00	0.00		-33.96	259.88	
		3.00			0.00			
	7	0.00			3.78			
		0.00	6.68	29.80				
		3.00	6.68	49.85				
		3.00			3.78			

C S I / S A P 9 0 - - FINITE ELEMENT ANALYSIS OF STRUCTURES PAGE 11
PROGRAM:SAP90/FILE:sc_avelo.F3F
SALT RIVER BRIDGES - SCOUR (SOUTH CENTRAL AVENUE BRIDGE) "SC_AVELO"

F R A M E E L E M E N T F O R C E S

ELT ID	LOAD COND	DIST ENDI	1-2 PLANE SHEAR	1-2 PLANE MOMENT	AXIAL FORCE	1-3 PLANE SHEAR	1-3 PLANE MOMENT	AXIAL TORQ
402								
	1	0.00			-2448.72			
		0.00	0.00	0.00				
		7.83	0.00	0.00				
		7.83			-2656.55			
	2	0.00			-243.36			
		0.00	0.00	0.00				
		7.83	0.00	0.00				
		7.83			-243.36			
	3	0.00			0.00			
		0.00	27.09	147.01				
		7.83	49.26	445.91				
		7.83			0.00			
	4	0.00			0.00			
		0.00	6.60	49.23				
		7.83	6.60	100.91				
		7.83			0.00			
	5	0.00			0.00			
		0.00	11.05	82.43				
		7.83	11.05	168.95				
		7.83			0.00			
	6	0.00			0.00			
		0.00	0.00	0.00		-33.96	259.88	
		7.83	0.00	0.00		-33.96	-6.04	
		7.83			0.00			
	7	0.00			3.78			
		0.00	6.68	49.85				
		7.83	6.68	102.18				
		7.83			3.78			
403								
	1	0.00			-2656.55			
		0.00	0.00	0.00				
		12.00	0.00	0.00				
		12.00			-2915.54			
	2	0.00			-243.36			
		0.00	0.00	0.00				
		12.00	0.00	0.00				
		12.00			-243.36			
	3	0.00			0.00			
		0.00	49.26	445.91				
		12.00	49.26	1036.99				

C S I / S A P 9 0 - - FINITE ELEMENT ANALYSIS OF STRUCTURES PAGE 12
PROGRAM:SAP90/FILE:sc_avelo.F3F
SALT RIVER BRIDGES - SCOUR (SOUTH CENTRAL AVENUE BRIDGE) "SC_AVELO"

F R A M E E L E M E N T F O R C E S

ELT ID	LOAD COND	DIST ENDI	1-2 PLANE SHEAR	1-2 PLANE MOMENT	AXIAL FORCE	1-3 PLANE SHEAR	1-3 PLANE MOMENT	AXIAL TORQ
		12.00			0.00			
	4	0.00			0.00			
		0.00	6.60	100.91				
		12.00	6.60	180.11				
		12.00			0.00			
	5	0.00			0.00			
		0.00	11.05	168.95				
		12.00	11.05	301.55				
		12.00			0.00			
	6	0.00			0.00			
		0.00	0.00	0.00		-33.96	-6.04	
		11.52	22.28	141.47		0.00	-189.76	
		12.00	22.91	152.25		1.14	-189.49	
		12.00			0.00			
	7	0.00			3.78			
		0.00	6.68	102.18				
		12.00	6.68	182.37				
		12.00			3.78			
404								
	1	0.00			-2915.54			
		0.00	0.00	0.00				
		11.66	0.00	0.00				
		11.66			-3098.21			
	2	0.00			-243.36			
		0.00	0.00	0.00				
		11.66	0.00	0.00				
		11.66			-243.36			
	3	0.00			0.00			
		0.00	49.26	1036.99				
		11.66	49.26	1611.32				
		11.66			0.00			
	4	0.00			0.00			
		0.00	6.60	180.11				
		11.66	6.60	257.07				
		11.66			0.00			
	5	0.00			0.00			
		0.00	11.05	301.55				
		11.66	11.05	430.39				
		11.66			0.00			
	6	0.00			0.00			
		0.00	22.91	152.25		1.14	-189.49	

C S I / S A P 9 0 - - FINITE ELEMENT ANALYSIS OF STRUCTURES PAGE 13
PROGRAM:SAP90/FILE:sc_avelo.F3F
SALT RIVER BRIDGES - SCOUR (SOUTH CENTRAL AVENUE BRIDGE) "SC_AVELO"

F R A M E E L E M E N T F O R C E S

ELT ID	LOAD COND	DIST ENDI	1-2 PLANE SHEAR	1-2 PLANE MOMENT	AXIAL FORCE	1-3 PLANE SHEAR	1-3 PLANE MOMENT	AXIAL TORQ
		11.66	33.24	488.88		9.29	-123.94	
		11.66			0.00			
	7	0.00			3.78			
		0.00	6.68	182.37				
		11.66	6.68	260.30				
		11.66			3.78			
405								
	1	0.00			-3098.21			
		0.00	0.00	0.00				
		13.58	0.00	0.00				
		13.58			-3340.61			
	2	0.00			-243.36			
		0.00	0.00	0.00				
		13.58	0.00	0.00				
		13.58			-243.36			
	3	0.00			0.00			
		0.00	49.26	1611.32				
		13.58	49.26	2280.23				
		13.58			0.00			
	4	0.00			0.00			
		0.00	6.60	257.07				
		13.58	6.60	346.70				
		13.58			0.00			
	5	0.00			0.00			
		0.00	11.05	430.39				
		13.58	11.05	580.45				
		13.58			0.00			
	6	0.00			0.00			
		0.00	33.24	488.88		9.29	-123.94	
		13.58	36.48	969.59		13.93	44.24	
		13.58			0.00			
	7	0.00			3.78			
		0.00	6.68	260.30				
		13.58	6.68	351.05				
		13.58			3.78			
406								
	1	0.00			-3340.61			
DL		0.00	0.00	0.00				
		10.84	0.00	0.00				
		10.84			-3534.11			
	2	0.00			-243.36			

C S I / S A P 9 0 - - FINITE ELEMENT ANALYSIS OF STRUCTURES PAGE 14
PROGRAM:SAP90/FILE:sc_avelo.F3F
SALT RIVER BRIDGES - SCOUR (SOUTH CENTRAL AVENUE BRIDGE) "SC_AVELO"

F R A M E E L E M E N T F O R C E S

ELT ID	LOAD COND	DIST ENDI	1-2 PLANE SHEAR	1-2 PLANE MOMENT	AXIAL FORCE	1-3 PLANE SHEAR	1-3 PLANE MOMENT	AXIAL TORQ
		0.00	0.00	0.00				
		10.84	0.00	0.00				
U+E		10.84			-243.36			
	3	0.00			0.00			
W		0.00	-51.86	2280.23				
		10.84	-51.86	1718.06				
		10.84			0.00			
	4	0.00			0.00			
W+U		0.00	-8.51	346.70				
		10.84	-8.51	254.45				
		10.84			0.00			
	5	0.00			0.00			
LF		0.00	-14.25	580.45				
		10.84	-14.25	426.00				
		10.84			0.00			
	6	0.00			0.00			
SF		0.00	-11.13	969.59		13.93	44.24	
		10.84	-11.13	848.92		13.93	195.27	
		10.84			0.00			
	7	0.00			3.78			
T		0.00	-8.62	351.05				
		10.84	-8.62	257.64				
		10.84			3.78			
407								
	1	0.00			-3534.11			
		0.00	0.00	0.00				
		1.50	0.00	0.00				
		1.50			-3626.02			
	2	0.00			-243.36			
		0.00	0.00	0.00				
		1.50	0.00	0.00				
		1.50			-243.36			
	3	0.00			0.00			
		0.00	-51.86	1718.06				
		1.50	-51.86	1640.27				
		1.50			0.00			
	4	0.00			0.00			
		0.00	-8.51	254.45				
		1.50	-8.51	241.68				
		1.50			0.00			
	5	0.00			0.00			

C S I / S A P 9 0 - - FINITE ELEMENT ANALYSIS OF STRUCTURES PAGE 15
PROGRAM:SAP90/FILE:sc_avelo.F3F
SALT RIVER BRIDGES - SCOUR (SOUTH CENTRAL AVENUE BRIDGE) "SC_AVELO"

F R A M E E L E M E N T F O R C E S

ELT ID	LOAD COND	DIST ENDI	1-2 PLANE SHEAR	1-2 PLANE MOMENT	AXIAL FORCE	1-3 PLANE SHEAR	1-3 PLANE MOMENT	AXIAL TORQ
		0.00	-14.25	426.00				
		1.50	-14.25	404.63				
		1.50			0.00			
	6	0.00			0.00			
		0.00	-11.14	848.92		13.93	195.27	
		1.50	-11.14	832.22		13.93	216.17	
		1.50			0.00			
	7	0.00			3.78			
		0.00	-8.62	257.64				
		1.50	-8.62	244.72				
		1.50			3.78			
408								
	1	0.00			-3626.02			
		0.00	0.00	0.00				
		3.50	0.00	0.00				
		3.50			-3985.12			
	2	0.00			-243.36			
		0.00	0.00	0.00				
		3.50	0.00	0.00				
		3.50			-243.36			
	3	0.00			0.00			
		0.00	-51.85	1640.27				
		3.50	-51.85	1458.79				
		3.50			0.00			
	4	0.00			0.00			
		0.00	-8.51	241.68				
		3.50	-8.51	211.90				
		3.50			0.00			
	5	0.00			0.00			
		0.00	-14.24	404.63				
		3.50	-14.24	354.78				
		3.50			0.00			
	6	0.00			0.00			
		0.00	-11.14	832.22		13.93	216.17	
		3.50	-11.14	793.22		13.93	264.94	
		3.50			0.00			
	7	0.00			3.78			
		0.00	-8.62	244.72				
		3.50	-8.62	214.56				
		3.50			3.78			

C S I / S A P 9 0 - - FINITE ELEMENT ANALYSIS OF STRUCTURES PAGE 16
PROGRAM:SAP90/FILE:sc_avelo.F3F
SALT RIVER BRIDGES - SCOUR (SOUTH CENTRAL AVENUE BRIDGE) "SC_AVELO"

F R A M E E L E M E N T F O R C E S

ELT ID	LOAD COND	DIST ENDI	1-2 PLANE SHEAR	1-2 PLANE MOMENT	AXIAL FORCE	1-3 PLANE SHEAR	1-3 PLANE MOMENT	AXIAL TORQ
500								
	1	0.00			-2344.77			
		0.00	0.00	0.01				
		4.46	0.00	0.01				
		4.46			-2344.77			
	2	0.00			-243.36			
		0.00	0.00	0.00				
		4.46	0.00	0.00				
		4.46			-243.36			
	3	0.00			0.00			
		0.00	17.85	-0.01				
		4.46	17.85	79.60				
		4.46			0.00			
	4	0.00			0.00			
		0.00	6.60	0.00				
		4.46	6.60	29.43				
		4.46			0.00			
	5	0.00			0.00			
		0.00	11.05	0.00				
		4.46	11.05	49.28				
		4.46			0.00			
	6	0.00			0.00			
		0.00	0.00	0.00		-33.96	513.24	
		4.46	0.00	0.00		-33.96	361.77	
		4.46			0.00			
	7	0.00			3.78			
		0.00	-6.68	0.00				
		4.46	-6.68	-29.80				
		4.46			3.78			
501								
	1	0.00			-2344.77			
		0.00	0.00	0.01				
		3.00	0.00	0.00				
		3.00			-2448.72			
	2	0.00			-243.36			
		0.00	0.00	0.00				
		3.00	0.00	0.00				
		3.00			-243.36			
	3	0.00			0.00			
		0.00	17.85	79.60				
		3.00	27.09	147.01				

C S I / S A P 9 0 - - FINITE ELEMENT ANALYSIS OF STRUCTURES PAGE 17
PROGRAM:SAP90/FILE:sc_avelo.F3F
SALT RIVER BRIDGES - SCOUR (SOUTH CENTRAL AVENUE BRIDGE) "SC_AVELO"

F R A M E E L E M E N T F O R C E S

ELT ID	LOAD COND	DIST ENDI	1-2 PLANE SHEAR	1-2 PLANE MOMENT	AXIAL FORCE	1-3 PLANE SHEAR	1-3 PLANE MOMENT	AXIAL TORQ
		3.00			0.00			
	4	0.00			0.00			
		0.00	6.60	29.43				
		3.00	6.60	49.23				
		3.00			0.00			
	5	0.00			0.00			
		0.00	11.05	49.28				
		3.00	11.05	82.43				
		3.00			0.00			
	6	0.00			0.00			
		0.00	0.00	0.00		-33.96	361.77	
		3.00	0.00	0.00		-33.96	259.88	
		3.00			0.00			
	7	0.00			3.78			
		0.00	-6.68	-29.80				
		3.00	-6.68	-49.85				
		3.00			3.78			
502	----------							
	1	0.00			-2448.72			
		0.00	0.00	0.00				
		7.83	0.00	0.00				
		7.83			-2656.55			
	2	0.00			-243.36			
		0.00	0.00	0.00				
		7.83	0.00	0.00				
		7.83			-243.36			
	3	0.00			0.00			
		0.00	27.09	147.01				
		7.83	49.26	445.91				
		7.83			0.00			
	4	0.00			0.00			
		0.00	6.60	49.23				
		7.83	6.60	100.91				
		7.83			0.00			
	5	0.00			0.00			
		0.00	11.05	82.43				
		7.83	11.05	168.95				
		7.83			0.00			
	6	0.00			0.00			
		0.00	0.00	0.00		-33.96	259.88	
		7.83	0.00	0.00		-33.96	-6.04	

C S I / S A P 9 0 - - FINITE ELEMENT ANALYSIS OF STRUCTURES PAGE 18
PROGRAM:SAP90/FILE:sc_avelo.F3F
SALT RIVER BRIDGES - SCOUR (SOUTH CENTRAL AVENUE BRIDGE) "SC_AVELO"

F R A M E E L E M E N T F O R C E S

ELT ID	LOAD COND	DIST ENDI	1-2 PLANE SHEAR	1-2 PLANE MOMENT	AXIAL FORCE	1-3 PLANE SHEAR	1-3 PLANE MOMENT	AXIAL TORQ
		7.83			0.00			
	7	0.00			3.78			
		0.00	-6.68	-49.85				
		7.83	-6.68	-102.18				
		7.83			3.78			
503	----------							
	1	0.00			-2656.55			
		0.00	0.00	0.00				
		12.00	0.00	0.00				
		12.00			-2915.54			
	2	0.00			-243.36			
		0.00	0.00	0.00				
		12.00	0.00	0.00				
		12.00			-243.36			
	3	0.00			0.00			
		0.00	49.26	445.91				
		12.00	49.26	1036.99				
		12.00			0.00			
	4	0.00			0.00			
		0.00	6.60	100.91				
		12.00	6.60	180.11				
		12.00			0.00			
	5	0.00			0.00			
		0.00	11.05	168.95				
		12.00	11.05	301.55				
		12.00			0.00			
	6	0.00			0.00			
		0.00	0.00	0.00		-33.96	-6.04	
		11.52	22.28	141.47		0.00	-189.76	
		12.00	22.91	152.25		1.14	-189.49	
		12.00			0.00			
	7	0.00			3.78			
		0.00	-6.68	-102.18				
		12.00	-6.68	-182.37				
		12.00			3.78			
504	----------							
	1	0.00			-2915.54			
		0.00	0.00	0.00				
		11.66	0.00	0.00				
		11.66			-3098.21			
	2	0.00			-243.36			

C S I / S A P 9 0 - - FINITE ELEMENT ANALYSIS OF STRUCTURES PAGE 19
PROGRAM:SAP90/FILE:sc_avelo.F3F
SALT RIVER BRIDGES - SCOUR (SOUTH CENTRAL AVENUE BRIDGE) "SC_AVELO"

F R A M E E L E M E N T F O R C E S

ELT ID	LOAD COND	DIST ENDI	1-2 PLANE SHEAR	1-2 PLANE MOMENT	AXIAL FORCE	1-3 PLANE SHEAR	1-3 PLANE MOMENT	AXIAL TORQ
		0.00	0.00	0.00				
		11.66	0.00	0.00				
		11.66			-243.36			
	3	0.00			0.00			
		0.00	49.26	1036.99				
		11.66	49.26	1611.32				
		11.66			0.00			
	4	0.00			0.00			
		0.00	6.60	180.11				
		11.66	6.60	257.07				
		11.66			0.00			
	5	0.00			0.00			
		0.00	11.05	301.55				
		11.66	11.05	430.39				
		11.66			0.00			
	6	0.00			0.00			
		0.00	22.91	152.25		1.14	-189.49	
		11.66	33.24	488.88		9.29	-123.94	
		11.66			0.00			
	7	0.00			3.78			
		0.00	-6.68	-182.37				
		11.66	-6.68	-260.30				
		11.66			3.78			
505	----------							
	1	0.00			-3098.21			
		0.00	0.00	0.00				
		13.58	0.00	0.00				
		13.58			-3340.61			
	2	0.00			-243.36			
		0.00	0.00	0.00				
		13.58	0.00	0.00				
		13.58			-243.36			
	3	0.00			0.00			
		0.00	49.26	1611.32				
		13.58	49.26	2280.23				
		13.58			0.00			
	4	0.00			0.00			
		0.00	6.60	257.07				
		13.58	6.60	346.70				
		13.58			0.00			
	5	0.00			0.00			

C S I / S A P 9 0 - - FINITE ELEMENT ANALYSIS OF STRUCTURES PAGE 20
PROGRAM:SAP90/FILE:sc_avelo.F3F
SALT RIVER BRIDGES - SCOUR (SOUTH CENTRAL AVENUE BRIDGE) "SC_AVELO"

F R A M E E L E M E N T F O R C E S

ELT ID	LOAD COND	DIST ENDI	1-2 PLANE SHEAR	1-2 PLANE MOMENT	AXIAL FORCE	1-3 PLANE SHEAR	1-3 PLANE MOMENT	AXIAL TORQ
		0.00	11.05	430.39				
		13.58	11.05	580.45				
		13.58			0.00			
	6	0.00			0.00			
		0.00	33.24	488.88		9.29	-123.94	
		13.58	36.48	969.59		13.93	44.24	
		13.58			0.00			
	7	0.00			3.78			
		0.00	-6.68	-260.30				
		13.58	-6.68	-351.05				
		13.58			3.78			
506	----------							
	1	0.00			-3340.61			
		0.00	0.00	0.00				
		10.84	0.00	0.00				
		10.84			-3534.11			
	2	0.00			-243.36			
		0.00	0.00	0.00				
		10.84	0.00	0.00				
		10.84			-243.36			
	3	0.00			0.00			
		0.00	-51.86	2280.23				
		10.84	-51.86	1718.06				
		10.84			0.00			
	4	0.00			0.00			
		0.00	-8.51	346.70				
		10.84	-8.51	254.45				
		10.84			0.00			
	5	0.00			0.00			
		0.00	-14.25	580.45				
		10.84	-14.25	426.00				
		10.84			0.00			
	6	0.00			0.00			
		0.00	-11.13	969.59		13.93	44.24	
		10.84	-11.13	848.92		13.93	195.27	
		10.84			0.00			
	7	0.00			3.78			
		0.00	8.62	-351.05				
		10.84	8.62	-257.64				
		10.84			3.78			

C S I / S A P 9 0 - - FINITE ELEMENT ANALYSIS OF STRUCTURES PAGE 21
PROGRAM:SAP90/FILE:sc_avelo.F3F
SALT RIVER BRIDGES - SCOUR (SOUTH CENTRAL AVENUE BRIDGE) "SC_AVELO"

F R A M E E L E M E N T F O R C E S

ELT ID	LOAD COND	DIST ENDI	1-2 PLANE SHEAR	1-2 PLANE MOMENT	AXIAL FORCE	1-3 PLANE SHEAR	1-3 PLANE MOMENT	AXIAL TORQ
507								
	1	0.00			-3534.11			
		0.00	0.00	0.00				
		1.50	0.00	0.00				
		1.50			-3626.02			
	2	0.00			-243.36			
		0.00	0.00	0.00				
		1.50	0.00	0.00				
		1.50			-243.36			
	3	0.00			0.00			
		0.00	-51.86	1718.06				
		1.50	-51.86	1640.27				
		1.50			0.00			
	4	0.00			0.00			
		0.00	-8.51	254.45				
		1.50	-8.51	241.68				
		1.50			0.00			
	5	0.00			0.00			
		0.00	-14.25	426.00				
		1.50	-14.25	404.63				
		1.50			0.00			
	6	0.00			0.00			
		0.00	-11.14	848.92		13.93	195.27	
		1.50	-11.14	832.22		13.93	216.17	
		1.50			0.00			
	7	0.00			3.78			
		0.00	8.62	-257.64				
		1.50	8.62	-244.72				
		1.50			3.78			
508								
	1	0.00			-3626.02			
		0.00	0.00	0.00				
		3.50	0.00	0.00				
		3.50			-3985.12			
	2	0.00			-243.36			
		0.00	0.00	0.00				
		3.50	0.00	0.00				
		3.50			-243.36			
	3	0.00			0.00			
		0.00	-51.85	1640.27				
		3.50	-51.85	1458.79				

C S I / S A P 9 0 - - FINITE ELEMENT ANALYSIS OF STRUCTURES PAGE 22
PROGRAM:SAP90/FILE:sc_avelo.F3F
SALT RIVER BRIDGES - SCOUR (SOUTH CENTRAL AVENUE BRIDGE) "SC_AVELO"

F R A M E E L E M E N T F O R C E S

ELT ID	LOAD COND	DIST ENDI	1-2 PLANE SHEAR	1-2 PLANE MOMENT	AXIAL FORCE	1-3 PLANE SHEAR	1-3 PLANE MOMENT	AXIAL TORQ
		3.50			0.00			
	4	0.00			0.00			
		0.00	-8.51	241.68				
		3.50	-8.51	211.90				
		3.50			0.00			
	5	0.00			0.00			
		0.00	-14.24	404.63				
		3.50	-14.24	354.78				
		3.50			0.00			
	6	0.00			0.00			
		0.00	-11.14	832.22		13.93	216.17	
		3.50	-11.14	793.22		13.93	264.94	
		3.50			0.00			
	7	0.00			3.78			
		0.00	8.62	-244.72				
		3.50	8.62	-214.56				
		3.50			3.78			

TYLIN INTERNATIONAL

Project: Salt River Bridges-Scour | Job No. 1317.00 | Sheet: of
Item: South Central Avenue Bridge | Designer: VPD | Date: 10/20/99
Checker: | Date:
Grid: 1/10"

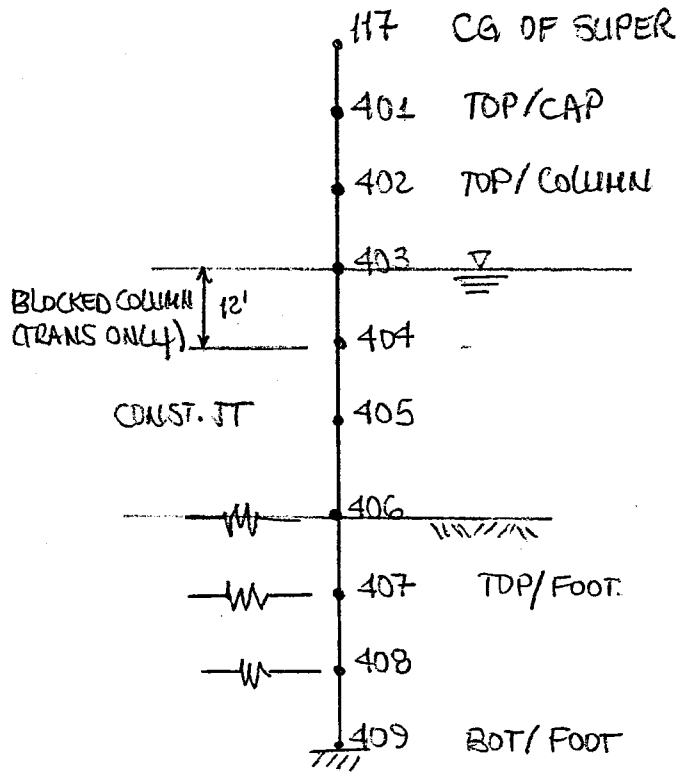

TRANSVERSE NODAL NOMENCLATURE

```
SALT RIVER BRIDGES - SCOUR  (SOUTH CENTRAL AVENUE BRIDGE)   "SC_AVETR"
C
C UNITS: KIPS, FEET, SECONDS
C
SYSTEM
C LOAD CONDITION 1, DEAD LOAD
C LOAD CONDITION 2, LIVE LOAD - 1 LANE
C LOAD CONDITION 3, LIVE LOAD - 2 LANES
C LOAD CONDITION 4, LIVE LOAD - 4 LANES
C LOAD CONDITION 5, WIND ON STRUCTURE (TRANSVERSE, LONGITUDINAL & OVERTURNING)
C LOAD CONDITION 6, WIND ON LIVE LOAD
C LOAD CONDITION 7, STREAM FORCE ON COLUMN
C LOAD CONDITION 8, TEMPERATURE
C
L=8
C
JOINTS
C   CL OF SUPERSTRUCTURE
117  X=400.00  Y=1078.37  Z=0.00
C   PIER 4 - CAP
401  X=400.00  Y=1073.91  Z=0.00
C   PIER 4 - COLUMN
402  X=400.00  Y=1070.91  Z=0.00
403  X=400.00  Y=1063.08  Z=0.00
404  X=400.00  Y=1051.08  Z=0.00
405  X=400.00  Y=1039.42  Z=0.00
406  X=400.00  Y=1025.84  Z=0.00
407  X=400.00  Y=1015.00  Z=0.00
408  X=400.00  Y=1013.50  Z=0.00
409  X=400.00  Y=1010.00  Z=0.00

RESTRAINTS
C   PIER 1
C 400   R=0 0 1 1 1 0
C 401 408 1 R=0 0 1 1 1 0
409   R=1 1 1 1 1 1

SPRINGS
C
406 K=3634,0,0,0,0,0
407 K= 503,0,0,0,0,0
408 K=8448,0,0,0,0,0

FRAMES
C
NM=9   NL=6  Y=-1 0 0 0 0 0 0 0
C
C  ALL MATERIALS CONCRETE:
C  ROADWAY, 4'-6" DEEP BY 81'-0" WIDE TYPE IV AASHTO GIRDER,
C  ADDITIONAL WEIGHT/MASSS EQUIVALENT TO 2.8" BY 81'-0" CONCRETE INCLUDED TO
C  ACCOUNT FOR FUTURE WEARING SURFACE AND BARRIERS.
C TOP PIER, 77'-0" BY 3'-0"
1  A=231.000 I=173.250,114133. J=692.31 AS=231.000,231.000 E=449571 TC=6E-6 W=34.
650
C TOP WALL COLUMN, 76'-0" BY 2'-6"
2  A=190.000 I= 98.960,91453.3 J=395.44 AS=190.000,190.000 E=449571 TC=6E-6 W=28.
500
C HWL, 65'-6 3/4" BY 2'-6"
3  A=163.892 I= 85.361,70749.  J=341.10 AS=163.892,163.892 E=449571 TC=6E-6 W=24.
584
C BLOCKED COLUMN, 49'-6 3/4" BY 2'-6"
4  A=123.879 I= 64.520,39019.  J=257.82 AS=123.879,123.879 E=449571 TC=6E-6 W=18.
582
C CONST JOINT - WALL COLUMN, 34'-0" BY 2'-6"
5  A= 85.000 I= 44.270,8188.   J=176.91 AS= 85.000, 85.000 E=449571 TC=6E-6 W=12.
750
```



```
C CONST JOINT - BELOW, 34'-0" BY 3'-6"
6  A=119.000 I=121.480,11464.  J=485.43 AS=119.000,119.000 E=449571 TC=6E-6 W=17.
850
C TOP EXISTING FOOTING, 38'-0" BY 3'-6"
7  A=133.000 I=135.771,16004.  J=542.54 AS=133.000,133.000 E=449571 TC=6E-6 W=19.
950
C BOTTOM EXISTING FOOTING, 38'-0" BY 18'-0"
8  A=684.000 I=18468.,82380.   J=73798. AS=684.000,684.000 E=449571 TC=6E-6 W=102
.60
C RIGID MEMBER LINK, 39'2" BY 3'-6"
9  A=117.208 I=345.854,56092.  J=37.475 AS=117.208,117.208 E=594726 TC=6E-6 W=0.0
00
C
C Load Case V WIND LOAD ON STRUCTURE
C
C wind on substructure is load #6 & #7
C Fixed Pier Cap
C tran: 40 psf on  3.00' width (axis 3 - Y DIR)
C long: 40 psf on 77.00' width (axis 2 - X DIR)
1  WG=0.120   0.000   0.000
C
C Column
C tran: 40 psf on  2.50' width (axis 3 - Y DIR)
C long: 40 psf on 70.78' width (axis 2 - X DIR)
2  WG=0.100  0.000  0.000
C
C Load Case VII STREAM FORCE
C
C Blocked Column - 65.56' by 2.5'
3 TRAP=0.0 3.487 2.525  -1.00 2.363     1.294
C Column - 49.56' by 2.5'
4 TRAP=0.0 0.909 1.294  -1.00 0.489 0.477
C Wall Column Const Jt - 34' by 2.5'
5 TRAP=0.0 0.684 0.477 -1.00 0.000 0.000
C
C Load Case VIII TEMPERATURE
6  T=-40,0,0
C
C PIER 4 - SUPER TO CAP
400,117,401  LR=1 0 0 0 0 0  M=9   NSL=0  0  0  0  0  0  0  6
C PIER 4 - CAP
401,401,402                  M=1   NSL=0  0  0  0  0  0  0  6
C PIER 4 - COLUMN
402,402,403                  M=2,3 NSL=0  0  0  0  1  0  0  6
403,403,404                  M=3,4 NSL=0  0  0  0  2  0  3  6
404,404,405                  M=4,5 NSL=0  0  0  0  0  0  4  6
405,405,406                  M=6   NSL=0  0  0  0  0  0  5  6
406,406,407                  M=6,6 NSL=0  0  0  0  0  0  0  6
407,407,408                  M=7,8 NSL=0  0  0  0  0  0  0  6
408,408,409                  M=8,8 NSL=0  0  0  0  0  0  0  6
C
LOADS
C Load Case I DL (Super, Abut, Int & Pier Diaph Load, & SDL)
117  L=1  F=0.000, -2344.8, 0.000, 0.000, 0.000, 0.000
C Load Case II - LL+I (1 Lanes)
117  L=2  F=0.000, -81.14, 0.000, 0.000, 0.000, 2191.
C Load Case III - LL+I (2 Lanes)
117  L=3  F=0.000, -162.3, 0.000, 0.000, 0.000, 3408.
C Load Case IV - LL+I (4 Lanes)
117  L=4  F=0.000, -243.4, 0.000, 0.000, 0.000, 0.000
C Load Case V WIND LOADS - OVERTURNING FORCE
117  L=5  F=0.000,  162.0, 0.000, 0.000, 0.000,-3281.
C Load Case V WIND LOADS - SUPERSTRUCTURE
C tran: 50 psf on 9.667' height (GLOBAL X DIR)
117  L=5  F=49.400, 0.00, 0.000, 0.000, 0.000, 0.000
C Load Case V WIND ON LIVE LOAD - SUPERSTRUCTURE
```

```
C tran: 100 plf on 9.667' height (GLOBAL X DIR)
117  L=6  F=11.10, 0.00, 0.000, 0.000, 0.000, 0.000
C Load Case VII STREAM FORCE - BUOYANCY
403  L=7  F=0.000, 10.23, 0.000, 0.000, 0.000, 0.000
404  L=7  F=0.000,  7.73, 0.000, 0.000, 0.000, 0.000
405  L=7  F=0.000,  5.30, 0.000, 0.000, 0.000, 0.000
```

```
      $$$$$$$$     $$$$$$$$$$    $$$$$$$        $$$$$$$$       $$$$$$$
     $$$$$$$$$$   $$$$$$$$$$   $$$$$$$$$$    $$$$$$$$$$$    $$$$$$$$$$
    $$           $$      $$   $$       $$   $$       $$    $$       $$
   $$           $$      $$   $$       $$   $$       $$    $$       $$
   $$$$$$$$    $$$$$$$$$$   $$$$$$$$$$     $$$$$$$$$$    $$       $$
         $$   $$      $$   $$                   $$    $$       $$
        $$   $$      $$   $$                   $$    $$       $$
$$$$$$$$$$   $$      $$   $$            $$$$$$$$$$    $$$$$$$$$$
$$$$$$$$    $$      $$   $$            $$$$$$$$       $$$$$$$
```

STRUCTURAL ANALYSIS PROGRAMS

VERSION P5.31

Copyright (C) 1978-1991
EDWARD L. WILSON
All rights reserved

C S I / S A P 9 0 - - FINITE ELEMENT ANALYSIS OF STRUCTURES PAGE 1
PROGRAM:SAP90/FILE:sc_avetr.F3F
SALT RIVER BRIDGES - SCOUR (SOUTH CENTRAL AVENUE BRIDGE) "SC_AVETR"

F R A M E E L E M E N T F O R C E S

ELT ID	LOAD COND	DIST ENDI	1-2 PLANE SHEAR	1-2 PLANE MOMENT	AXIAL FORCE	1-3 PLANE SHEAR	1-3 PLANE MOMENT	AXIAL TORQ
400								
	1	0.00			-2344.80			
		4.46			-2344.80			
	2	0.00			-81.14			
		0.00	0.00	-2191.00				
		4.46	0.00	-2191.00				
		4.46			-81.14			
	3	0.00			-162.30			
		0.00	0.00	-3408.00				
		4.46	0.00	-3408.00				
		4.46			-162.30			
	4	0.00			-243.40			
		4.46			-243.40			
	5	0.00			162.00			
		0.00	49.40	3281.00				
		4.46	49.40	3501.32				
		4.46			162.00			
	6	0.00			0.00			
		0.00	11.10	0.00				
		4.46	11.10	49.51				
		4.46			0.00			
	7	0.00			0.00			
		0.00	0.00	0.00		0.00	0.00	
		4.46	0.00	0.00		0.00	0.00	
		4.46			0.00			
	8	0.00			0.00			
		4.46			0.00			
401								
	1	0.00			-2344.80			
		3.00			-2448.75			
	2	0.00			-81.14			
		0.00	0.00	-2191.00				
		3.00	0.00	-2191.00				
		3.00			-81.14			
	3	0.00			-162.30			
		0.00	0.00	-3408.00				
		3.00	0.00	-3408.00				
		3.00			-162.30			
	4	0.00			-243.40			

C S I / S A P 9 0 - - FINITE ELEMENT ANALYSIS OF STRUCTURES PAGE 2
PROGRAM:SAP90/FILE:sc_avetr.F3F
SALT RIVER BRIDGES - SCOUR (SOUTH CENTRAL AVENUE BRIDGE) "SC_AVETR"

F R A M E E L E M E N T F O R C E S

ELT ID	LOAD COND	DIST ENDI	1-2 PLANE SHEAR	1-2 PLANE MOMENT	AXIAL FORCE	1-3 PLANE SHEAR	1-3 PLANE MOMENT	AXIAL TORQ
		3.00			-243.40			
	5	0.00			162.00			
		0.00	49.40	3501.32				
		3.00	49.40	3649.52				
		3.00			162.00			
	6	0.00			0.00			
		0.00	11.10	49.51				
		3.00	11.10	82.81				
		3.00			0.00			
	7	0.00			0.00			
		0.00	0.00	0.00		0.00	0.00	
		3.00	0.00	0.00		0.00	0.00	
		3.00			0.00			
	8	0.00			0.00			
		3.00			0.00			
402								
	1	0.00			-2448.75			
		7.83			-2656.57			
	2	0.00			-81.14			
		0.00	0.00	-2191.00				
		7.83	0.00	-2191.00				
		7.83			-81.14			
	3	0.00			-162.30			
		0.00	0.00	-3408.00				
		7.83	0.00	-3408.00				
		7.83			-162.30			
	4	0.00			-243.40			
		7.83			-243.40			
	5	0.00			162.00			
		0.00	49.40	3649.52				
		7.83	50.34	4040.00				
		7.83			162.00			
	6	0.00			0.00			
		0.00	11.10	82.81				
		7.83	11.10	169.72				
		7.83			0.00			
	7	0.00			0.00			
		0.00	0.00	0.00		0.00	0.00	
		7.83	0.00	0.00		0.00	0.00	
		7.83			0.00			

C S I / S A P 9 0 - - FINITE ELEMENT ANALYSIS OF STRUCTURES PAGE 3
PROGRAM:SAP90/FILE:sc_avetr.F3F
SALT RIVER BRIDGES - SCOUR (SOUTH CENTRAL AVENUE BRIDGE) "SC_AVETR"

F R A M E E L E M E N T F O R C E S

ELT ID	LOAD* COND	DIST ENDI	1-2 PLANE SHEAR	1-2 PLANE MOMENT	AXIAL FORCE	1-3 PLANE SHEAR	1-3 PLANE MOMENT	AXIAL TORQ
	8	0.00			0.00			
		7.83			0.00			
403	----------							
	1	0.00			-2656.57			
		12.00			-2915.57			
	2	0.00			-81.14			
		0.00	0.00	-2191.00				
		12.00	0.00	-2191.00				
		12.00			-81.14			
	3	0.00			-162.30			
		0.00	0.00	-3408.00				
		12.00	0.00	-3408.00				
		12.00			-162.30			
	4	0.00			-243.40			
		12.00			-243.40			
	5	0.00			162.00			
		0.00	50.34	4040.00				
		12.00	51.54	4651.28				
		12.00			162.00			
	6	0.00			0.00			
		0.00	11.10	169.72				
		12.00	11.10	302.92				
		12.00			0.00			
	7	0.00			10.23			
		0.00	0.00	0.00		0.00	0.00	
		12.00	35.10	224.09		22.91	152.26	
		12.00			10.23			
	8	0.00			0.00			
		12.00			0.00			
404	----------							
	1	0.00			-2915.57			
		11.66			-3098.24			
	2	0.00			-81.14			
		0.00	0.00	-2191.00				
		11.66	0.00	-2191.00				
		11.66			-81.14			
	3	0.00			-162.30			
		0.00	0.00	-3408.00				
		11.66	0.00	-3408.00				

C S I / S A P 9 0 - - FINITE ELEMENT ANALYSIS OF STRUCTURES PAGE 4
PROGRAM:SAP90/FILE:sc_avetr.F3F
SALT RIVER BRIDGES - SCOUR (SOUTH CENTRAL AVENUE BRIDGE) "SC_AVETR"

F R A M E E L E M E N T F O R C E S

ELT ID	LOAD COND	DIST ENDI	1-2 PLANE SHEAR	1-2 PLANE MOMENT	AXIAL FORCE	1-3 PLANE SHEAR	1-3 PLANE MOMENT	AXIAL TORQ
		11.66			-162.30			
	4	0.00			-243.40			
		11.66			-243.40			
	5	0.00			162.00			
		0.00	51.54	4651.28				
		11.66	51.54	5252.23				
		11.66			162.00			
	6	0.00			0.00			
		0.00	11.10	302.92				
		11.66	11.10	432.35				
		11.66			0.00			
	7	0.00			17.96			
		0.00	35.10	224.09		22.91	152.26	
		11.66	43.25	685.63		33.24	488.88	
		11.66			17.96			
	8	0.00			0.00			
		11.66			0.00			
405	----------							
	1	0.00			-3098.24			
		13.58			-3340.64			
	2	0.00			-81.14			
		0.00	0.00	-2191.00				
		13.58	0.00	-2191.00				
		13.58			-81.14			
	3	0.00			-162.30			
		0.00	0.00	-3408.00				
		13.58	0.00	-3408.00				
		13.58			-162.30			
	4	0.00			-243.40			
		13.58			-243.40			
	5	0.00			162.00			
		0.00	51.54	5252.23				
		13.58	51.54	5952.14				
		13.58			162.00			
	6	0.00			0.00			
		0.00	11.10	432.35				
		13.58	11.10	583.08				
		13.58			0.00			
	7	0.00			23.26			

C S I / S A P 9 0 - - FINITE ELEMENT ANALYSIS OF STRUCTURES PAGE 5
PROGRAM:SAP90/FILE:sc_avetr.F3F
SALT RIVER BRIDGES - SCOUR (SOUTH CENTRAL AVENUE BRIDGE) "SC_AVETR"

F R A M E E L E M E N T F O R C E S

ELT ID	LOAD COND	DIST ENDI	1-2 PLANE SHEAR	1-2 PLANE MOMENT	AXIAL FORCE	1-3 PLANE SHEAR	1-3 PLANE MOMENT	AXIAL TORQ
		0.00	43.25	685.63		33.24	488.88	
		13.58	47.89	1315.02		36.48	969.59	
		13.58			23.26			
	8	0.00			0.00			
		13.58			0.00			
406	----------							
	1	0.00			-3340.64			
DL		10.84			-3534.13			
	2	0.00			-81.14			
LL+I		0.00	8.43	-2191.00				
		10.84	8.43	-2099.62				
		10.84			-81.14			
	3	0.00			-162.30			
LL+I		0.00	13.11	-3408.00				
		10.84	13.11	-3265.86				
		10.84			-162.30			
LL+I	4	0.00			-243.40			
		10.84			-243.40			
	5	0.00			162.00			
W		0.00	27.09	5952.14				
		10.84	27.09	6245.74				
		10.84			162.00			
	6	0.00			0.00			
WOLL		0.00	8.52	583.08				
		10.84	8.52	675.46				
		10.84			0.00			
	7	0.00			23.26			
SF		0.00	41.39	1315.02		36.48	969.59	
		10.84	41.39	1763.71		36.48	1365.01	
		10.84			23.26			
T	8	0.00			0.00			
		10.84			0.00			
407	----------							
	1	0.00			-3534.13			
		1.50			-3626.04			
	2	0.00			-81.14			
		0.00	8.43	-2099.62				
		1.50	8.43	-2086.97				
		1.50			-81.14			

C S I / S A P 9 0 - - FINITE ELEMENT ANALYSIS OF STRUCTURES PAGE 6
PROGRAM:SAP90/FILE:sc_avetr.F3F
SALT RIVER BRIDGES - SCOUR (SOUTH CENTRAL AVENUE BRIDGE) "SC_AVETR"

F R A M E E L E M E N T F O R C E S

ELT ID	LOAD COND	DIST ENDI	1-2 PLANE SHEAR	1-2 PLANE MOMENT	AXIAL FORCE	1-3 PLANE SHEAR	1-3 PLANE MOMENT	AXIAL TORQ
	3	0.00			-162.30			
		0.00	13.12	-3265.86				
		1.50	13.12	-3246.18				
		1.50			-162.30			
	4	0.00			-243.40			
		1.50			-243.40			
	5	0.00			162.00			
		0.00	27.08	6245.74				
		1.50	27.08	6286.36				
		1.50			162.00			
	6	0.00			0.00			
		0.00	8.52	675.46				
		1.50	8.52	688.24				
		1.50			0.00			
	7	0.00			23.26			
		0.00	41.39	1763.71		36.48	1365.01	
		1.50	41.39	1825.79		36.48	1419.73	
		1.50			23.26			
	8	0.00			0.00			
		1.50			0.00			
408	----------							
	1	0.00			-3626.04			
		3.50			-3985.15			
	2	0.00			-81.14			
		0.00	8.44	-2086.97				
		3.50	8.44	-2057.42				
		3.50			-81.14			
	3	0.00			-162.30			
		0.00	13.13	-3246.18				
		3.50	13.13	-3200.22				
		3.50			-162.30			
	4	0.00			-243.40			
		3.50			-243.40			
	5	0.00			162.00			
		0.00	27.03	6286.36				
		3.50	27.03	6380.98				
		3.50			162.00			
	6	0.00			0.00			
		0.00	8.51	688.24				

C S I / S A P 9 0 - - FINITE ELEMENT ANALYSIS OF STRUCTURES PAGE 7
PROGRAM:SAP90/FILE:sc_avetr.F3F
SALT RIVER BRIDGES - SCOUR (SOUTH CENTRAL AVENUE BRIDGE) "SC_AVETR"

F R A M E E L E M E N T F O R C E S

ELT ID	LOAD COND	DIST ENDI	1-2 PLANE SHEAR	1-2 PLANE MOMENT	AXIAL FORCE	1-3 PLANE SHEAR	1-3 PLANE MOMENT	AXIAL TORQ
		3.50	8.51	718.05				
		3.50			0.00			
	7	0.00			23.26			
		0.00	41.37	1825.79		36.48	1419.73	
		3.50	41.37	1970.58		36.48	1547.40	
		3.50			23.26			
	8	0.00			0.00			
		3.50			0.00			

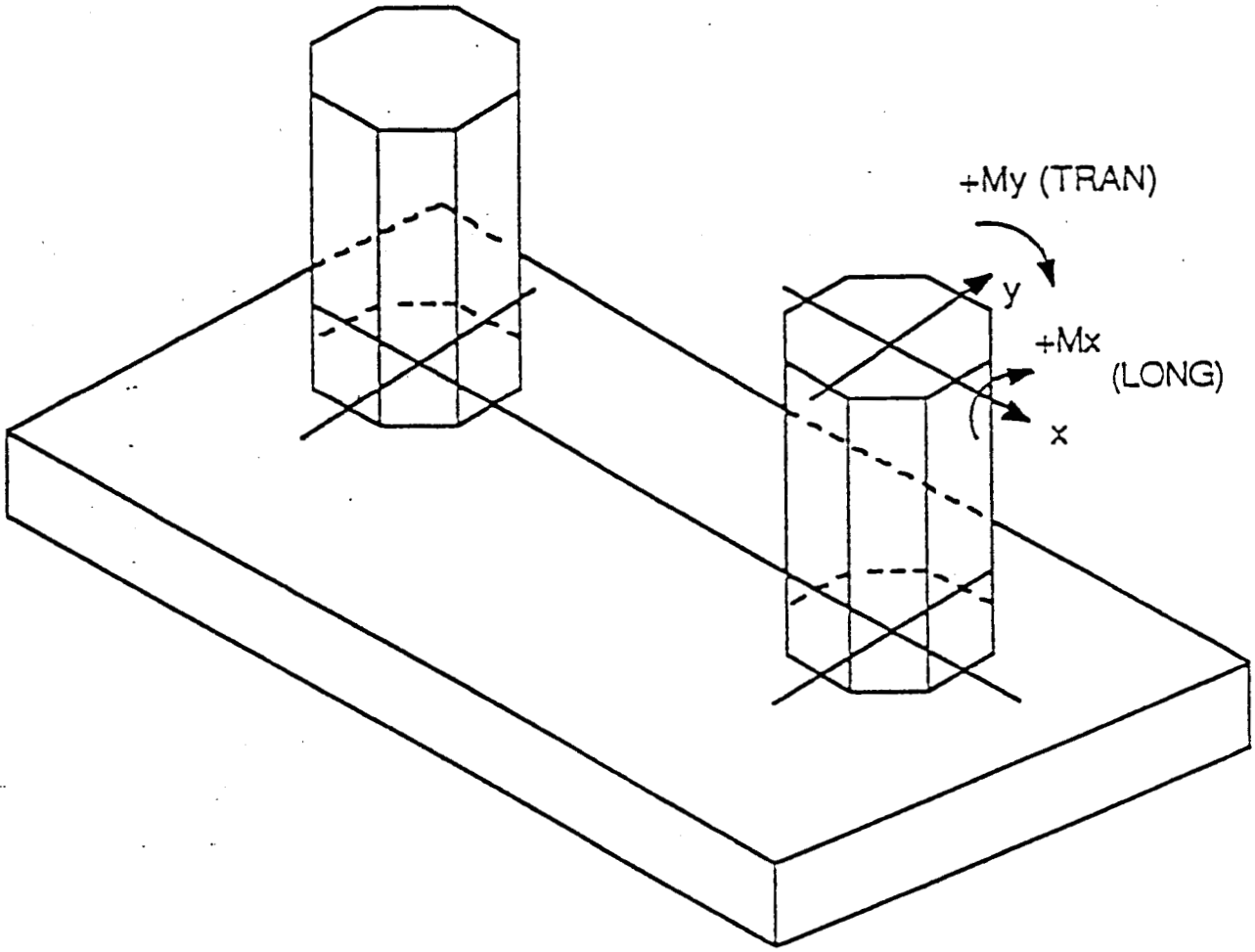

FIGURE 1-1: Isometric View of a Bent Showing the x and y Axes of the Column and the Applied Moment Directions

TYLIN INTERNATIONAL

Project: Salt River Bridges - Scour | Job No. 1317.00 | Sheet: of
Item: South Central Avenue Bridge | Designer: VPD | Date: 10/19/99
Checker: | Date:
Grid: 1/10"

BOTTOM OF WALL COLUMN

- DEAD LOAD

	N (AXIAL)	My (TRANS)	Mx (LONG)
LONG & TRAN	3534.11 K	0.00 K-Ft	0.00 K-Ft.

- LIVE LOAD - (FROM SAP 90 - LONG & TRAN)

- CASE 1 - MAX My (TRANS)

	N (AXIAL)	My (TRANS)	Mx (LONG)
WALL_COLUMN	162.284 K	3265.86 K-Ft	0.00 K-Ft

- CASE 2 - MAX Mx (LONG)

	N (AXIAL)	My (TRANS)	Mx (LONG)
WALL_COLUMN	—	—	—

- CASE 3 - MAX N (AXIAL)

	N (AXIAL)	My (TRANS)	Mx (LONG)
WALL_COLUMN	243.36 K	0.00 K-Ft	0.00 K-Ft

- WIND LOAD

- WIND LOAD FROM SUPERSTRUCTURE - SUBSTRUCTURE & OVERTURNING

	N (AXIAL)	My (TRANS)	Mx (LONG)
WALL_COLUMN	-162.00 K	6245.74 K-Ft	4999.06 K-Ft

- WIND ON LIVE LOAD

	N (AXIAL)	My (TRANS)	Mx (LONG)
WALL_COLUMN	0.00 K	675.42 K-Ft	254.45 K-Ft

- LONGITUDINAL FORCES

	N (AXIAL)	My (TRANS)	Mx (LONG)
WALL_COLUMN	0.00 K	0.00 K-Ft	426.00 K-Ft

- STREAM FORCE

	N (AXIAL)	My (TRANS)	Mx (LONG)
WALL_COLUMN	-23.26 K	1763.71 K-Ft.	1365.01 K-Ft

- TEMP -3.78 K 0.00 K-Ft. 257.64 K-Ft

```
 SALT RIVER BRIDGES SCOUR - SOUTH CENTRAL AVENUE
        2
        5
        4        92
        0
        2       1.0       6.0         1    398.66      0.00      0.00
     3000  29000000    0.0030     60000
   408.00     42.00
  -198.00     16.00    198.00     16.00      1.56        44
  -198.00      5.33    198.00      5.33      1.56         2
  -198.00     -5.33    198.00     -5.33      1.56         2
  -198.00    -16.00    198.00    -16.00      1.56        44
LOAD AT BOTTOM                      YES    SPREAD
 0.99 0.50 0.00 0.00     22.22     58.92     1    0      3.00  AGS    B
      0       0   3408       0       0   2989   651      0      0      0  1144
      0       0      0       0       0   4436   170    285      0    180   353
   3534       0    162       0     243   -162     0      0      0      4   -23
                     0       0       0                          0
                     0       0       0                          0
                     0       0       0                          0
        0       0       0       0       0       0
        0       0       0       0       0       0
        0       0       0       0       0       0
```

```
TITLE   SALT RIVER BRIDGES SCOUR - SOUTH CENTR                    PAGE  1

***************** Licensed to: T.Y. Lin International ****************
*                                                                    *
*              IAI RECOL-PC  - VERSION 2.1    06.26.89               *
*                                                                    *
**********************************************************************


COLUMN TYPE                    =  2  (RECTANGULAR)
CONCRETE LOOPS                 =  1
TOTAL NO. OF CONCRETE COORD.   =  4
STEEL REBAR PATTERN            =  5  (ROWS)
NUMBER OF STEEL REBAR ROWS     =  4
TOTAL NO. OF STEEL REBARS      = 92
PLOT TYPE                      =  0  (NO PLOT)
DESIGN TYPE                    =  2  (CHECK)
PERCENT STEEL LIMITS           =     (1.00 % MIN.  6.00 % MAX.)


*************
* BENT DATA *
*************************************************************************

NUMBER OF COLUMNS IN BENT                  =     1
OUT TO OUT DISTANCE (DIAMETER) OF SPIRAL   =398.66 (INCHES)
DISTANCE FROM TOP COLUMN PLASTIC HINGE TO
CENTER OF GRAVITY OF THE SUPERSTRUCTURE    =  0.00 (FEET)
CENTER TO CENTER SPACING OF COLUMNS        =  0.00 (FEET)


******************************
* MATERIAL PROPERTIES  (PSI) *
******************************************************************************

ULTIMATE CONCRETE COMPRESSIVE STRESS - FC =     3000.
YOUNG S MODULUS FOR CONCRETE         - EC =  3122019.
YOUNG S MODULUS FOR STEEL BARS       - ES = 29000000.
ULTIMATE CONCRETE COMPRESSIVE STRAIN - EO =      .003
YIELDING STRESS FOR STEEL BARS       - FY =    60000.
```

TITLE SALT RIVER BRIDGES SCOUR - SOUTH CENTR PAGE 2

RECTANGULAR CROSS-SECTION

HX	HY
408.00	42.00

CONCRETE COORDINATES (INCHES)

COORD	X	Y
1	204.00	21.00
2	-204.00	21.00
3	-204.00	-21.00
4	204.00	-21.00

TITLE SALT RIVER BRIDGES SCOUR - SOUTH CENTR PAGE 3

ROW PATTERN

X1	Y1	X2	Y2	AREA	BARS	ROW
-198.00	16.00	198.00	16.00	1.56	44	1
-198.00	5.33	198.00	5.33	1.56	2	2
-198.00	-5.33	198.00	-5.33	1.56	2	3
-198.00	-16.00	198.00	-16.00	1.56	44	4

STEEL REBAR COORDINATES (INCHES)

COORD	X	Y
1	-198.00	16.00
2	-188.79	16.00
3	-179.58	16.00
4	-170.37	16.00
5	-161.16	16.00
6	-151.95	16.00
7	-142.74	16.00
8	-133.53	16.00
9	-124.33	16.00
10	-115.12	16.00
11	-105.91	16.00
12	-96.70	16.00
13	-87.49	16.00
14	-78.28	16.00
15	-69.07	16.00
16	-59.86	16.00
17	-50.65	16.00
18	-41.44	16.00
19	-32.23	16.00
20	-23.02	16.00
21	-13.81	16.00
22	-4.60	16.00
23	4.60	16.00
24	13.81	16.00
25	23.02	16.00
26	32.23	16.00
27	41.44	16.00
28	50.65	16.00
29	59.86	16.00
30	69.07	16.00
31	78.28	16.00
32	87.49	16.00
33	96.70	16.00
34	105.91	16.00
35	115.12	16.00
36	124.33	16.00
37	133.53	16.00
38	142.74	16.00
39	151.95	16.00
40	161.16	16.00
41	170.37	16.00
42	179.58	16.00
43	188.79	16.00
44	198.00	16.00
45	-198.00	5.33
46	198.00	5.33
47	-198.00	-5.33
48	198.00	-5.33

49	-198.00	-16.00
50	-188.79	-16.00
51	-179.58	-16.00
52	-170.37	-16.00
53	-161.16	-16.00
54	-151.95	-16.00
55	-142.74	-16.00
56	-133.53	-16.00
57	-124.33	-16.00
58	-115.12	-16.00
59	-105.91	-16.00
60	-96.70	-16.00
61	-87.49	-16.00
62	-78.28	-16.00
63	-69.07	-16.00
64	-59.86	-16.00
65	-50.65	-16.00
66	-41.44	-16.00
67	-32.23	-16.00
68	-23.02	-16.00
69	-13.81	-16.00
70	-4.60	-16.00
71	4.60	-16.00
72	13.81	-16.00
73	23.02	-16.00
74	32.23	-16.00
75	41.44	-16.00
76	50.65	-16.00
77	59.86	-16.00
78	69.07	-16.00
79	78.28	-16.00
80	87.49	-16.00
81	96.70	-16.00
82	105.91	-16.00
83	115.12	-16.00
84	124.33	-16.00
85	133.53	-16.00
86	142.74	-16.00
87	151.95	-16.00
88	161.16	-16.00
89	170.37	-16.00
90	179.58	-16.00
91	188.79	-16.00
92	198.00	-16.00

THE MAIN LONGITUDINAL STEEL IS ASSUMED TO BE # 11 BARS.

TITLE SALT RIVER BRIDGES SCOUR - SOUTH CENTR PAGE 4

```
*************************
* INITIAL REFERENCE DATA *
*************************************************************************

TOTAL AREA OF THE SECTION                AG =    119.00 FT**2
NOMINAL AXIAL LOAD STRENGTH              PO =  51942.02 KIPS
TOTAL REINFORCEMENT AREA                AST =    143.52 IN**2
PERCENT STEEL                             =      0.84 %

GROSS MOMENT OF INERTIA ABOUT Y-AXIS   IYC =  11463.67 FT**4
GROSS MOMENT OF INERTIA ABOUT X-AXIS   IXC =    121.48 FT**4

STEEL MOMENT OF INERTIA ABOUT Y-AXIS   IYS =  102.3365 FT**4
STEEL MOMENT OF INERTIA ABOUT X-AXIS   IXS =    1.7034 FT**4
```

TITLE SALT RIVER BRIDGES SCOUR - SOUTH CENTR PAGE 5

```
**************************
* COLUMN LOAD DATA (K-FT) *
**************************************************************************
```

LOAD NAME: LOAD AT BOTTOM
FOOTING DATA FILE: YES
TYPE FOOTING: SPREAD

MOMENT DISTRIBUTION FACT :---TOP---:	:---BOTTOM---:			PERCENT	COLUMN LENGTH	STEEL TIE=1	LOCATION TOP=1	DUCTILITY FACTOR
DESIGN CRITERIA	SPC CATEGORY DAY	DAX	DBY	DBX	IMPACT	(FEET)	SPIRAL=0	BOTTOM=0	(Z)
AGS	0.99	0.50 B	0.00	0.00	22.22	58.92	1	0	3.00

COLUMN GROUP LOADS - SERVICE (K-FT)

	DEAD LOAD	PRE STRESS	:---- LL+IMPACT ---: CASE 1 TRANS MY-MAX	CASE 2 LONG MX-MAX	CASE 3 AXIAL N-MAX	WIND	WL	LF	CF-MY	TEMP	SF& BY
MY	0	0	3408	0	0	2989	651	0	0	0	11 44
MX	0	0	0	0	0	4436	170	285	0	180	3 53
P	3534	0	162	0	243	-162	0	0	0	4	- 23
PMY			0	0	0				0		
PMX			0	0	0				0		
P			0	0	0				0		

COLUMN SEISMIC AND ARBITRARY LOADS (K-FT)

(ARS)	UNREDUCED SEISMIC CASE 1 MAX TRAN	CASE 2 MAX LONG	ARBITRARY LOADS SERVICE AL1	SERVICE AL2	ARBITRARY LOADS FACTORED AL1	FACTORED AL2
MY TRAN	0.	0.	0.	0.	0.	0.
MX LONG	0.	0.	0.	0.	0.	0.
P AXIAL	0.	0.	0.	0.	0.	0.

TITLE SALT RIVER BRIDGES SCOUR - SOUTH CENTR PAGE 6

WARNING:

THE RATIO OF THE COLUMN CLEAR HEIGHT TO THE MAXIMUM WIDTH IS LESS THAN 2.5. THEREFORE, THE SECTION MAY BE A PIER WALL AND SHOULD BE DESIGNED AS A COLUMN ONLY IN THE LONGITUDINAL DIRECTION AND AS A SHEAR WALL IN THE TRANSVERSE DIRECTION (CODE 1.4.11).

THE TRANSVERE MOMENTS ARE SET EQUAL TO ZERO.

TITLE SALT RIVER BRIDGES SCOUR - SOUTH CENTR PAGE 7

```
*****************************************************
* FACTORED LOADS FOR COLUMN DESIGN CHECK  (KIP-FT) *
*****************************************************************************
```

APPLIED FACTORED MOMENTS ARE MAGNIFIED FOR SLENDERNESS IN ACCORDANCE WITH CALTRANS BRIDGE DESIGN SPECIFICATIONS. (ART 8.16.5)

LENGTH = 58.92 FT FC = 3.00 KSI FY = 60.00 KSI
STEEL = 0.84 % AST = 143.52 SQ IN

GROUP	CASE	:------ APPLIED FACTORED ------: TRANS MY	LONG MX	COMB M	AXIAL P	CAPACITY (PHI*MN) MU	PHI	RATIO MU/M	
IH	1	0.	608.	608.	3767.	14940.	0.80	24.56	OK
IH	2	0.	549.	549.	3416.	14625.	0.81	26.66	OK
IH	3	0.	835.	835.	5091.	16049.	0.76	19.23	OK
IP	1	0.	549.	549.	3416.	14625.	0.81	26.66	OK
IP	2	0.	549.	549.	3416.	14625.	0.81	26.66	OK
IP	3	0.	742.	742.	4564.	15627.	0.78	21.05	OK
II		0.	6431.	6431.	3205.	14432.	0.81	2.24	OK
III	1	0.	2888.	2888.	3563.	14758.	0.80	5.11	OK
III	2	0.	2878.	2878.	3353.	14567.	0.81	5.06	OK
III	3	0.	2928.	2928.	4817.	15834.	0.77	5.41	OK
IV	1	0.	720.	720.	3632.	14820.	0.80	20.57	OK
IV	2	0.	718.	718.	3421.	14630.	0.81	20.37	OK
IV	3	0.	798.	798.	4885.	15891.	0.77	19.91	OK
V		0.	6404.	6404.	3087.	14323.	0.82	2.24	OK
VI	1	0.	3004.	3004.	3431.	14639.	0.81	4.87	OK
VI	2	0.	2995.	2995.	3229.	14454.	0.81	4.83	OK
VI	3	0.	3044.	3044.	4637.	15686.	0.77	5.15	OK
VII	1	0.	562.	562.	3511.	14185.	0.76	25.25	OK
VII	2	0.	562.	562.	3511.	14185.	0.76	25.25	OK

NOTE: FOR CALTRANS AND SPC-C AND SPC-D ONLY THE UNREDUCED SEISMIC MOMENTS ARE REDUCED BY THE Z OR R FACTOR. FOR SPC-B BOTH THE UNREDUCED SEISMIC AXIAL AND MOMENTS ARE REDUCED BY THE Z OR R FACTOR.

TITLE SALT RIVER BRIDGES SCOUR - SOUTH CENTR PAGE 8

```
*************************************************
* MOMENT MAGNIFICATION AND BUCKLING CALCULATIONS *
*****************************************************************************
```

REFERENCE: "CALTRANS BRIDGE DESIGN SPECIFICATIONS" (ART 8.16.5)
(COLUMN ASSUMED TO BE UNBRACED AGAINST SIDESWAY.)

MAGY = MOMENT MAGNIFACTION FACTOR ABOUT Y-AXIS
MAGX = MOMENT MAGNIFACTION FACTOR ABOUT X-AXIS

PCY = CRITICAL BUCKLING LOAD ABOUT Y-AXIS
PCX = CRITICAL BUCKLING LOAD ABOUT X-AXIS

KY = EFFECTIVE LENGTH FACTOR ABOUT Y-AXIS = 2.10
KX = EFFECTIVE LENGTH FACTOR ABOUT X-AXIS = 1.19

KY*L/R = SLENDERNESS RATIO ABOUT Y-AXIS = 13.
KX*L/R = SLENDERNESS RATIO ABOUT X-AXIS = 70.

IYS = STEEL MOMENT OF INERTIA ABOUT Y-AXIS = 102.3365 FT**4
IXS = STEEL MOMENT OF INERTIA ABOUT X-AXIS = 1.7034 FT**4

GR	CA	:-MOMENT MAGNIFICATION-: TRAN MAGY	LONG MAGX	COMB MAG	CRACKED TRANSFORMED SECTION--: E*IY	E*IX	CRITICAL -----BUCKLING----: TRAN PCY	LONG PCX	AXIAL LOAD P
IH	1	1.000	1.042	1.042	2770394981.	34268287.	1785983.	68323.	2741.
IH	2	1.000	1.036	1.036	2770394981.	34268287.	1785983.	68323.	2390.
IH	3	1.000	1.058	1.058	2770394981.	34268287.	1785983.	68323.	3724.
IP	1	1.000	1.036	1.036	2770394981.	34268287.	1785983.	68323.	2390.
IP	2	1.000	1.036	1.036	2770394981.	34268287.	1785983.	68323.	2390.
IP	3	1.000	1.049	1.049	2770394981.	34268287.	1785983.	68323.	3197.
II		1.000	1.033	1.033	2770394981.	34268287.	1785983.	68323.	2180.
III	1	1.000	1.039	1.039	2770394981.	34268287.	1785983.	68323.	2538.
III	2	1.000	1.035	1.035	2770394981.	34268287.	1785983.	68323.	2327.
III	3	1.000	1.053	1.053	2770394981.	34268287.	1785983.	68323.	3450.
IV	1	1.000	1.040	1.040	2770394981.	34268287.	1785983.	68323.	2606.
IV	2	1.000	1.036	1.036	2770394981.	34268287.	1785983.	68323.	2396.
IV	3	1.000	1.054	1.054	2770394981.	34268287.	1785983.	68323.	3518.
V		1.000	1.031	1.031	2770394981.	34268287.	1785983.	68323.	2061.
VI	1	1.000	1.036	1.036	2770394981.	34268287.	1785983.	68323.	2406.
VI	2	1.000	1.033	1.033	2770394981.	34268287.	1785983.	68323.	2203.
VI	3	1.000	1.050	1.050	2770394981.	34268287.	1785983.	68323.	3270.
VII	1	1.000	1.032	1.032	2770394981.	34268287.	1785983.	68323.	2144.
VII	2	1.000	1.032	1.032	2770394981.	34268287.	1785983.	68323.	2144.

TITLE SALT RIVER BRIDGES SCOUR - SOUTH CENTR PAGE 9

COLUMN SERVICE LOADS (K-FT) AND MAXIMUM WORKING STRESSES (PSI)

YOUNG S MODULUS FOR CONCRETE - EC = 3122019. PSI
MODULAR RATIO (ES/EC) - N = 9.3

		:---- SERVICE LOADS (K-FT) ----:				:---- MAX STRESS (PSI) ----:		
GP	CASE	TRANS MY	LONG MX	COMB M	AXIAL P	CONC COMP	STEEL TEN	STEEL COMP
IH	1	0.	353.	353.	3673.	232.	0.	2086.
IH	2	0.	353.	353.	3511.	223.	0.	2004.
IH	3	0.	353.	353.	3754.	236.	0.	2127.
II		0.	3831.	3831.	2679.	612.	4074.	4366.
III	1	0.	1711.	1711.	2900.	312.	0.	2555.
III	2	0.	1711.	1711.	2770.	305.	0.	2489.
III	3	0.	1711.	1711.	2964.	315.	0.	2588.
IV	1	0.	426.	426.	2942.	199.	0.	1761.
IV	2	0.	426.	426.	2812.	192.	0.	1696.
IV	3	0.	426.	426.	3006.	202.	0.	1794.
V		0.	3549.	3549.	2395.	570.	4089.	4029.
VI	1	0.	1656.	1656.	2592.	290.	0.	2365.
VI	2	0.	1656.	1656.	2476.	284.	0.	2309.
VI	3	0.	1656.	1656.	2650.	293.	0.	2394.
DL		0.	0.	0.	3534.	193.	0.	1791.

TITLE SALT RIVER BRIDGES SCOUR - SOUTH CENTR PAGE 10

****
* SERVICE LOADS FOR FOOTING DESIGN (UNITS KIP-FT) *
****

GROUP	CASE	TRANS MY	LONG MX	COMB M	AXIAL P
IH	1	0.	353.	353.	3644.
IH	2	0.	353.	353.	3511.
IH	3	0.	353.	353.	3710.
II		0.	3831.	3831.	2679.
III	1	0.	1711.	1711.	2876.
III	2	0.	1711.	1711.	2770.
III	3	0.	1711.	1711.	2929.
IV	1	0.	426.	426.	2918.
IV	2	0.	426.	426.	2812.
IV	3	0.	426.	426.	2971.
V		0.	3549.	3549.	2395.
VI	1	0.	1656.	1656.	2571.
VI	2	0.	1656.	1656.	2476.
VI	3	0.	1656.	1656.	2618.

****
* FACTORED LOADS FOR FOOTING DESIGN (UNITS KIP-FT) *
****

GROUP	CASE	TRANS MY	LONG MX	COMB M	AXIAL P
IH	1	0.	459.	459.	4851.
IH	2	0.	459.	459.	4564.
IH	3	0.	459.	459.	4995.
IP	1	0.	459.	459.	4564.
IP	2	0.	459.	459.	4564.
IP	3	0.	459.	459.	4564.
II		0.	6226.	6226.	4354.
III	1	0.	2780.	2780.	4673.
III	2	0.	2780.	2780.	4501.
III	3	0.	2780.	2780.	4760.
IV	1	0.	693.	693.	4742.
IV	2	0.	693.	693.	4569.
IV	3	0.	693.	693.	4828.
V		0.	6211.	6211.	4191.
VI	1	0.	2899.	2899.	4499.
VI	2	0.	2899.	2899.	4333.
VI	3	0.	2899.	2899.	4582.

TITLE SALT RIVER BRIDGES SCOUR - SOUTH CENTR PAGE 11

```
*************************************************************
* PROBABLE PLASTIC MOMENT (1.3 X NOMINAL MOMENT) (KIP-FT) *
*****************************************************************************
```

CODE (8.16.4.4) AND MEMO TO DESIGNERS 15-10

FC = 3.00 KSI FY = 60.00 KSI
EO = 0.0030 IN/IN AST = 143.52 SQ IN

ANGLE	TRANS MPY	LONG MPX	COMB MP	AXIAL P	P-BALANCE (APPROX)
0.0	0.1899E-10	0.3193E+05	0.3193E+05	0.3116E+05	19473
	0.1009E-10	0.3564E+05	0.3564E+05	0.2597E+05	
	0.4185E-11	0.3829E+05	0.3829E+05	0.2077E+05	
	-.3662E-11	0.3725E+05	0.3725E+05	0.1559E+05	
	-.8391E-11	0.3236E+05	0.3236E+05	0.1039E+05	
	-.3662E-11	0.2511E+05	0.2511E+05	0.5197E+04	
	-.1312E-10	0.2241E+05	0.2241E+05	0.3537E+04	
	-.2731E-10	0.1631E+05	0.1631E+05	0.3090E+01	
	-.3204E-10	0.1169E+05	0.1169E+05	-.2593E+04	
	-.2258E-10	0.7036E+04	0.7036E+04	-.5190E+04	

TITLE SALT RIVER BRIDGES SCOUR - SOUTH CENTR PAGE 12

DESIGN ASSUMPTIONS:

1. ALL COLUMNS ARE THE SAME I.E., PRISMATIC, EQUAL LENGTH, EQUAL SPACING.
2. PLASTIC HINGES FORM AT THE TOP AND BOTTOM OF THE COLUMNS.
3. THE DISTANCE BETWEEN THE PLASTIC HINGES IS TAKEN AS THE COLUMN LENGTH.
4. THE OVER-TURNING FORCE ACTS THROUGH THE C.G. OF THE SUPERSTRUCTURE AT A DISTANCE 'CGS' ABOVE THE TOP OF THE COLUMN.
5. THE COLUMNS ARE NUMBERED FROM LEFT TO RIGHT AND THE OVERTURNING FORCE ACTS TO THE RIGHT.

```
***************************
* LONGITUDINAL DIRECTION *
*****************************************************************************
```

LOADS RESULTING FROM PLASTIC HINGING OF COLUMN NO. 1

TOP OF COLUMN	AXIAL FORCE	P = 2482. KIPS
	PLASTIC MOMENT	MP = 20624. K-FT
BOTTOM OF COLUMN	AXIAL FORCE	P = 3534. KIPS
	PLASTIC MOMENT	MP = 22401. K-FT

DESIGN SHEAR FORCE: VU = 730. KIPS

TITLE SALT RIVER BRIDGES SCOUR - SOUTH CENTR PAGE 13

TYLIN INTERNATIONAL

Project: Salt River Bridges - Scour Job No. 1317.00
Subject: South Central Avenue Bridge Author: VPD Date: 1/25/00

BOTTOM OF WALL COLUMN - CONFIGURATION

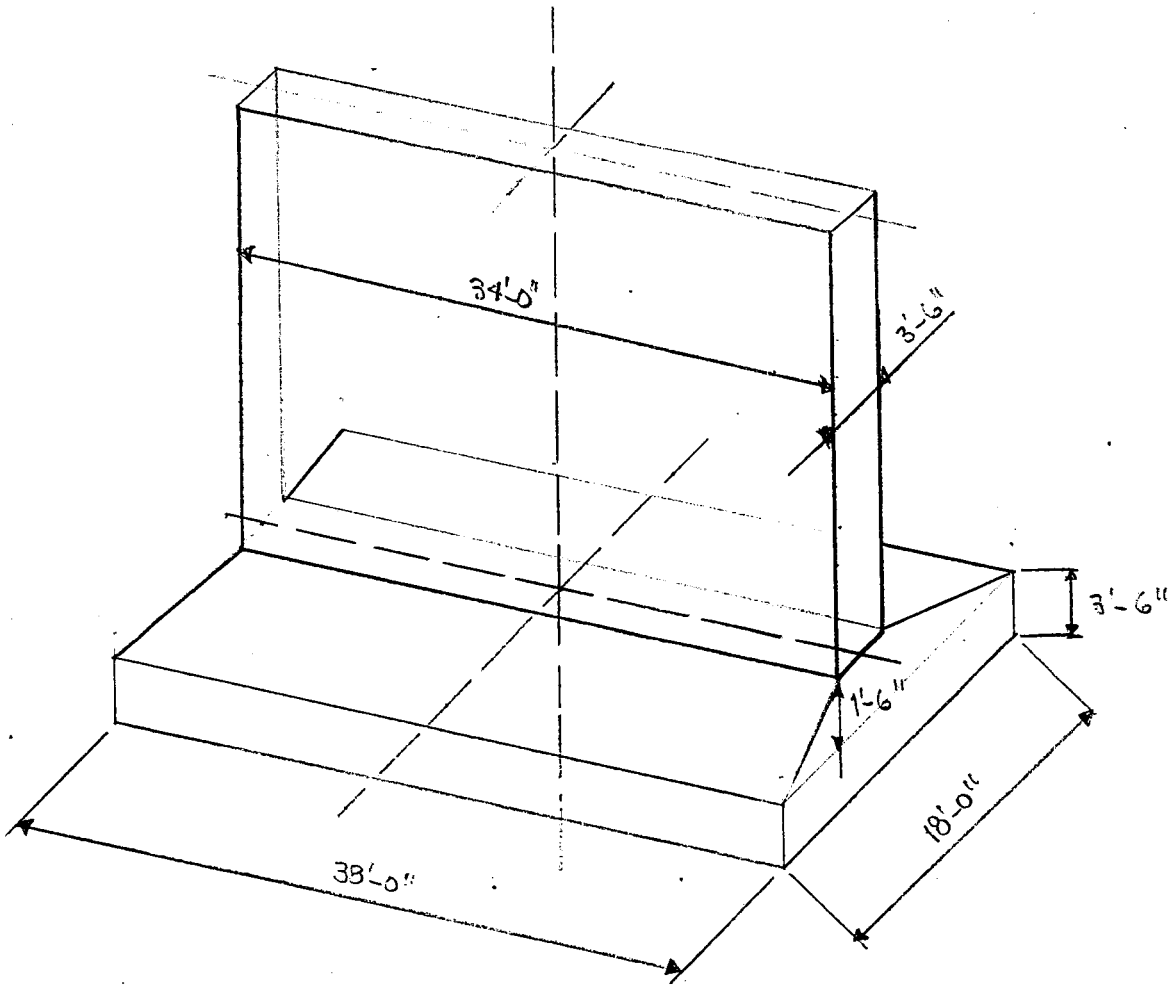

```
 SALT RIVER BRIDGES SCOUR - SOUTH CENTR    VERSION 2.1    06.26.89
    34.00      3.50    119.00     22.22  FIX  FIX          1
   DESIGN     38.00     18.00      3.50    SPREAD       5.00
    3000.    60000.     150.0
       25        51         5         5      4.00          X
       25        51         5        11      5.00          X
        5     12.00     12.00
    12.34    120.00    170.00      8.00
     0.00      0.00      0.00      0.00      0.00       0.00
LOAD AT BOTTOM                    AGS     B         1
     0         0   3408      0      0   2989   651     0     0     0  1144
     0         0      0      0      0   4436   170   285     0   180   353
  3534         0    162      0    243   -162     0     0     0     4   -23
                      0      0      0                          0
                      0      0      0                          0
                      0      0      0                          0
        0         0      0      0      0      0      0
        0         0      0      0      0      0      0
        0         0      0      0      0      0      0
       0.        0.     0.     0.     0.     0.      0.
       0.        0.     0.     0.     0.     0.  22406.
     3537.     3537.  3537.  3537.  3537.  3537.   3537.
```

```
DATE          :  10/20/99          TIME : 14:18:13

PROJECT TITLE :    SALT RIVER BRIDGES SCOUR - SOUTH CENTR      PAGE :   1

****************** Licensed to: T.Y. Lin International ******************
*                                                                       *
*    ( F A D )   PILE AND SPREAD FOOTING DESIGN PROGRAM                 *
*                  IMBSEN AND ASSOCIATES INCORPORATED                   *
*                     VERSION  2    Dec 1989                            *
*                                                                       *
*************************************************************************


****************
* COLUMN DATA *
*************************************************************************

COLUMN WIDTH X-DIR (TRANS)     =  34.00 FT
COLUMN DEPTH Y-DIR  (LONG)     =   3.50 FT
COLUMN AREA                    = 119.00 FT**2
EQUIVALENT WIDTH X-DIR (TRANS) =  34.00 FT
EQUIVALENT DEPTH Y-DIR  (LONG) =   3.50 FT
LIVE LOAD PERCENT IMPACT       =  22.22 PERCENT
END CONDITION ABOUT X-AXIS     =    FIX
END CONDITION ABOUT Y-AXIS     =    FIX
NUMBER OF COLUMNS IN BENT      =      1 COLUMNS


****************
* FOOTING DATA *
*************************************************************************

TYPE OF FOOTING ANALYSIS     = DESIGN
FOOTING LENGTH X-DIR (TRAN)  =  38.00 FT
FOOTING WIDTH  Y-DIR (LONG)  =  18.00 FT
MIN FOOTING DEPTH CONSIDERED =   3.50 FT
MAX FOOTING DEPTH CONSIDERED =   5.00 FT
TYPE OF FOOTING              = SPREAD


*******************************
* FOOTING MATERIAL PROPERTIES *
*************************************************************************

ULTIMATE CONCRETE COMPRESSIVE STRESS (FC) =  3000.0 PSI
YIELD STRESS OF STEEL REINFORCEMENT  (FY) = 60000.0 PSI
UNIT WEIGHT OF CONCRETE                   =   150.0 PCF
MODULAR RATIO (ES/EC)                (N) =     9.3
```

DATE : 10/20/99 TIME : 14:18:13

PROJECT TITLE : SALT RIVER BRIDGES SCOUR - SOUTH CENTR PAGE : 2

****
* TOP FLEXURE REINFORCEMENT DATA *
****

BAR SIZE IN X-DIR (TRAN) = 5
BAR SIZE IN Y-DIR (LONG) = 5
TOP BAR CLEARANCE = 4.00 INCHES
DIRECTION OF TOP BARS = X DIRECTION

****
* BOTTOM FLEXURE REINFORCEMENT DATA *
****

BAR SIZE IN X-DIR (TRAN) = 5
BAR SIZE IN Y-DIR (LONG) = 11
BOTTOM BAR CLEARANCE = 5.00 INCHES
DIRECTION OF BOTTOM BARS = X DIRECTION

****
* SHEAR REINFORCEMENT DATA *
****

STIRRUP BAR SIZE = 5
STIRRUP SPACING X-DIR (TRAN) = 12.00 INCHES
STIRRUP SPACING Y-DIR (LONG) = 12.00 INCHES

****
* SOIL DATA *
****

DEPTH OF EARTH COVER = 12.34 FT
UNIT WEIGHT OF COVER = 120.00 PCF
ENVIRONMENTAL FACTOR (Z) = 170.00 K/IN
NET BEARING CAPACITY (SERVICE) = 8.00 TONS/FT**2
MAX BEARING CAPACITY (SERVICE) = 8.95 TONS/FT**2
(INCLUDES WEIGHT OF OVERBURDEN)

****
* SPREAD FOOTING COST DATA *
****

CONTRACT ITEM		PRICE	UNIT
STRUCTURE EXCAVATION (BRIDGE)	=	0.00	$/CY
STRUCTURE BACKFILL (BRIDGE)	=	0.00	$/CY
STRUCTURAL CONCRETE BRIDGE FOOTING	=	0.00	$/CY
BAR REINFORCEMENT (BRIDGE)	=	0.00	$/LB

DATE : 10/20/99 TIME : 14:18:13

PROJECT TITLE : SALT RIVER BRIDGES SCOUR - SOUTH CENTR PAGE : 3

****
* FOOTING LOAD DATA (K-FT) *
****

SEISMIC ANALYSIS SPECIFICATIONS:

DESIGN CRITERIA (SDC)	PERFORMANCE CATEGORY (SPC)	MODIFICATION FACTOR (R)
AGS	B	1.000

LOAD AT BOTTOM

	DEAD LOAD	PRE STRESS	:---- LL+IMPACT ---: CASE 1 TRANS MY-MAX	CASE 2 LONG MX-MAX	CASE 3 AXIAL N-MAX	WIND	WL	LF	CF-MY	TEMP	SF& BY
MY	0	0	3408	0	0	2989	651	0	0	0	11 44
MX	0	0	0	0	0	4436	170	285	0	180	3 53
P	3534	0	162	0	243	-162	0	0	0	4	- 23
PMY			0	0	0				0		
PMX			0	0	0				0		
P			0	0	0				0		

	(ARS) UNREDUCED SEISMIC CASE 1 MAX TRAN	CASE 2 MAX LONG	ARBITRARY LOADS SERVICE AL1	SERVICE AL2	ARBITRARY LOADS FACTORED AL1	FACTORED AL2
MY TRAN	0.	0.	0.	0.	0.	0.
MX LONG	0.	0.	0.	0.	0.	0.
P AXIAL	0.	0.	0.	0.	0.	0.

PROBABLE PLASTIC (PB) LOADS (1.3 X NOMINAL MOMENT) (K-FT)

	PB1 MAX TRAN	PB2 75-DEGREE	PB3 60-DEGREE	PB4 45-DEGREE	PB5 30-DEGREE	PB6 15-DEGREE	PB7 MAX LONG
MY	0.	0.	0.	0.	0.	0.	0.
MX	0.	0.	0.	0.	0.	0.	22406.
P	3537.	3537.	3537.	3537.	3537.	3537.	3537.

DATE : 10/20/99 TIME : 14:18:13

PROJECT TITLE : SALT RIVER BRIDGES SCOUR - SOUTH CENTR PAGE : 4

****
* SERVICE LOADS (SER) FOR FOOTING DESIGN (K-FT) *
****

NOTE: RATIO = MAX BEARING CAPACITY / MAX PRESS

MAX BEARING CAPACITY (KSF) 17.90

:---------- APPLIED LOADS ----------:						MIN	MAX		
LOADING GRP	CA	TRAN MY	LONG MX	COMB M	AXIAL P	PRESS (KSF)	PRESS (KSF)	RATIO	
IH	1	3932.	353.	3948.	4839.	6.00	8.15	2.20	OK
IH	2	1144.	353.	1197.	4707.	6.45	7.32	2.45	OK
IH	3	1144.	353.	1197.	4906.	6.74	7.61	2.35	OK
II		3306.	3831.	5061.	3875.	3.04	8.30	2.16	OK
III	1	4384.	1711.	4706.	4072.	4.11	7.80	2.30	OK
III	2	2153.	1711.	2750.	3966.	4.47	7.13	2.51	OK
III	3	2153.	1711.	2750.	4125.	4.70	7.36	2.43	OK
IV	1	3146.	426.	3175.	4114.	5.08	6.95	2.58	OK
IV	2	915.	426.	1010.	4008.	5.44	6.28	2.85	OK
IV	3	915.	426.	1010.	4167.	5.67	6.51	2.75	OK
V		2952.	3549.	4617.	3591.	2.84	7.66	2.34	OK
VI	1	3914.	1656.	4250.	3766.	3.80	7.22	2.48	OK
VI	2	1923.	1656.	2538.	3672.	4.12	6.62	2.70	OK
VI	3	1923.	1656.	2538.	3814.	4.32	6.83	2.62	OK

THE FOLLOWING ARE INCLUDED IN THE APPLIED LOADS ABOVE:

WEIGHT OF COVER = 837. KIPS
WEIGHT OF FOOTING = 359. KIPS
TOTAL = 1196. KIPS

FOR GROUP II CASE THE FOOTING STRESSES AT EACH CORNER ARE:

6.77 8.30

3.04 4.56

DATE : 10/20/99 TIME : 14:18:13

PROJECT TITLE : SALT RIVER BRIDGES SCOUR - SOUTH CENTR PAGE : 5

****
* FACTORED LOADS (FAC) FOR FOOTING DESIGN (K-FT) *
****

NOTE: RATIO = MAX BEARING CAPACITY / MAX PRESS

PHI = .50

MAX BEARING CAPACITY (KSF) 25.90

:---------- APPLIED LOADS ----------:						MIN	MAX		
LOADING GRP	CA	TRAN MY	LONG MX	COMB M	AXIAL P	PRESS (KSF)	PRESS (KSF)	RATIO	
IH	1	7529.	459.	7543.	6406.	7.40	11.33	2.29	OK
IH	2	1487.	459.	1556.	6119.	8.38	9.51	2.72	OK
IH	3	1487.	459.	1556.	6550.	9.01	10.14	2.55	OK
IP	1	1487.	459.	1556.	6119.	8.38	9.51	2.72	OK
IP	2	1487.	459.	1556.	6119.	8.38	9.51	2.72	OK
IP	3	1487.	459.	1556.	6119.	8.38	9.51	2.72	OK
II		5373.	6226.	8224.	5908.	4.36	12.91	2.01	OK
III	1	7124.	2780.	7648.	6228.	6.11	12.10	2.14	OK
III	2	3499.	2780.	4469.	6056.	6.69	11.02	2.35	OK
III	3	3499.	2780.	4469.	6314.	7.07	11.39	2.27	OK
IV	1	5112.	693.	5159.	6296.	7.69	10.72	2.42	OK
IV	2	1487.	693.	1641.	6124.	8.27	9.63	2.69	OK
IV	3	1487.	693.	1641.	6382.	8.65	10.01	2.59	OK
V		5166.	6211.	8079.	5746.	4.18	12.62	2.05	OK
VI	1	6850.	2899.	7438.	6053.	5.86	11.84	2.19	OK
VI	2	3365.	2899.	4441.	5887.	6.42	10.80	2.40	OK
VI	3	3365.	2899.	4441.	6136.	6.78	11.16	2.32	OK

THE FOLLOWING ARE INCLUDED IN THE APPLIED LOADS ABOVE:

WEIGHT OF COVER = 1088. KIPS
WEIGHT OF FOOTING = 467. KIPS
TOTAL = 1554. KIPS

FOR GROUP II CASE THE FOOTING STRESSES AT EACH CORNER ARE:

10.43 12.91

4.36 6.84

DATE : 10/20/99 TIME : 14:18:13

PROJECT TITLE : SALT RIVER BRIDGES SCOUR - SOUTH CENTR PAGE : 6

****
* EARTHQUAKE LOADS (EQ) FOR FOOTING DESIGN (K-FT) *
****

NOTE: RATIO = MAX BEARING CAPACITY / MAX PRESS

ARS UNREDUCED SEISMIC (VII) & PROBABLE PLASTIC (PB)

PHI = 1.00

MAX BEARING CAPACITY (KSF) 49.90

:---------- APPLIED LOADS ----------:						MIN	MAX	
LOADING GRP	CA	TRAN MY	LONG MX	COMB M	AXIAL P	PRESS (KSF)	PRESS (KSF)	RATIO
PB1	1	0.	0.	0.	4733.	6.92	6.92	7.21 OK
PB2	1	0.	0.	0.	4733.	6.92	6.92	7.21 OK
PB3	1	0.	0.	0.	4733.	6.92	6.92	7.21 OK
PB4	1	0.	0.	0.	4733.	6.92	6.92	7.21 OK
PB5	1	0.	0.	0.	4733.	6.92	6.92	7.21 OK
PB6	1	0.	0.	0.	4733.	6.92	6.92	7.21 OK
PB7	1	0.	22406.	22406.	4733.	0.00	19.46	2.56 OK

ZERO STRESS LINE BETWEEN COORD. (-19.0, -3.8) & (19.0, -3.8)

THE FOLLOWING ARE INCLUDED IN THE APPLIED LOADS ABOVE:

WEIGHT OF COVER = 837. KIPS
WEIGHT OF FOOTING = 359. KIPS
TOTAL = 1196. KIPS

FOR GROUP PB7 CASE 1 THE FOOTING STRESSES AT EACH CORNER ARE:

19.46	19.46
0.00	0.00

DATE : 10/20/99 TIME : 14:18:13

PROJECT TITLE : SALT RIVER BRIDGES SCOUR - SOUTH CENTR PAGE : 7

****
* DESIGN OF BOTTOM FLEXURAL REINFORCEMENT *
****

NOTE: AREA OF STEEL IN THE SHORT DIRECTION FOR FACTORED AND EARTHQUAKE LOADS HAS BEEN INCREASED BY 1.36 (ART 4.4.6.3.2)

KEY TO TYPES OF LOADS:

SER = SERVICE LOADS
FAC = FACTORED LOADS PHI = 0.90
EQ = EARTHQUAKE LOADS PHI = 1.00
MIN1 = MINIMUM REINFORCEMENT (ART 8.17.1.1)
BASED ON 1.2 X THE CRACKING MOMENT
MIN2 = WAIVER OF MINIMUM REINFORCEMENT (ART 8.17.1.2)
BASED ON STEEL AREA ONE THIRD GREATER THAN REQUIRED BY ANALYSIS
MAX = MAXIMUM REINFORCEMENT (ART 8.16.3.1)
BASED ON .75 X BALANCED STEEL RATIO

FOOTING DEPTH = 3.50 FT

BAR SIZE	BAR DIR	LOAD TYPE	CONTROL GRP	CA	DEPTH EFFECTIVE (INCHES)	APPLIED MOMENT (K-FT)	REQUIRED STEEL AREA (SQ IN)	NO BARS
5	X	SER	IH	1	36.66	214.	2.99	10
11	Y	SER	IH	3	35.50	5285.	81.59	53
5	X	FAC	IH	1	36.66	304.	1.85	6
11	Y	FAC	II		35.50	8238.	72.84	47
5	X	EQ	PB7	1	36.66	278.	1.52	5
11	Y	EQ	PB7	1	35.50	13764.	111.96	72
5	X	MIN1			36.66	2609.	16.21	53
11	Y	MIN1			35.50	5507.	35.39	23
5	X	MIN2			36.66	285.	3.99	13
11	Y	MIN2			35.50	18352.	110.00	71
5	X	MAX			36.66	16991.	126.96	410
11	Y	MAX			35.50	33635.	259.54	167

********** CONTROL **********

5	X	MIN2			36.66	285.	3.99	13
11	Y	EQ	PB7	1	35.50	13764.	111.96	72

DATE : 10/20/99 TIME : 14:18:13

PROJECT TITLE : SALT RIVER BRIDGES SCOUR - SOUTH CENTR PAGE : 8

****
* DESIGN OF TOP FLEXURAL REINFORCEMENT *
****

NOTE: AREA OF STEEL IN THE SHORT DIRECTION FOR FACTORED AND EARTHQUAKE LOADS HAS BEEN INCREASED BY 1.36 (ART 4.4.6.3.2)

KEY TO TYPES OF LOADS:

SER = SERVICE LOADS
FAC = FACTORED LOADS PHI = 0.90
EQ = EARTHQUAKE LOADS PHI = 1.00
MIN1 = MINIMUM REINFORCEMENT (ART 8.17.1.1)
BASED ON 1.2 X THE CRACKING MOMENT
MIN2 = WAIVER OF MINIMUM REINFORCEMENT (ART 8.17.1.2)
BASED ON STEEL AREA ONE THIRD GREATER THAN REQUIRED BY ANALYSIS
MAX = MAXIMUM REINFORCEMENT (ART 8.16.3.1)
BASED ON .75 X BALANCED STEEL RATIO
MIN3 = MINIUMUM REINFORCEMENT (TEMPERATURE) (ART 8.20)
BASED ON 18" MAXIMUM BAR SPACING

FOOTING DEPTH = 3.50 FT

BAR SIZE	BAR DIR	LOAD TYPE	CONTROL GRP	CONTROL CA	DEPTH EFFECTIVE (INCHES)	APPLIED MOMENT (K-FT)	REQUIRED STEEL AREA (SQ IN)	NO BARS
5	X	SER	IH	1	37.66	0.	0.00	0
5	Y	SER	IH	1	36.97	0.	0.00	0
5	X	FAC	IH	1	37.66	0.	0.00	0
5	Y	FAC	IH	1	36.97	0.	0.00	0
5	X	EQ	PB7	1	37.66	63.	0.33	2
5	Y	EQ	PB7	1	36.97	1663.	12.29	40
5	X	MIN1			37.66	2609.	15.75	51
5	Y	MIN1			36.97	5507.	33.91	110
5	X	MIN2			37.66	84.	0.45	2
5	Y	MIN2			36.97	2217.	12.07	39
5	X	MAX			37.66	17930.	130.42	421
5	Y	MAX			36.97	36479.	270.29	872
5	X	MIN3			37.66	679.	4.03	13
5	Y	MIN3			36.97	1333.	8.06	26

********** CONTROL **********

5	X	MIN3			37.66	679.	4.03	13
5	Y	EQ	PB7	1	36.97	1663.	12.29	40

DATE : 10/20/99 TIME : 14:18:13

PROJECT TITLE : SALT RIVER BRIDGES SCOUR - SOUTH CENTR PAGE : 9

****
* FINAL RESULTS FOR FOOTING DESIGN *
****

FOOTING LENGTH = 38.00 FT
FOOTING WIDTH = 18.00 FT
INPUT DEPTH = 3.50 FT
FOOTING DEPTH REQUIRED FOR SHEAR = 3.50 FT
FOOTING DEPTH REQUIRED FOR MOMENT = 3.50 FT

****
* SPREAD FOOTING STRESS RESULTS *
****

LOAD TYPE	CONTROL GRP	CONTROL CA	MIN FOOTING STRESS (KSF)	CONTROL GRP	CONTROL CA	MAX FOOTING STRESS (KSF)	MAX BEARING CAPACITY (KSF)	
SER	V		2.84	II		8.30	17.90	OK
FAC	V		4.18	II		12.91	25.90	OK
EQ	PB7	1	0.00	PB7	1	19.46	49.90	OK

****
* SHEAR RESULTS *
****

DEPTH = 3.50 FT PERIMETER (BO) = 0.00 FT RATIO = CAPACITY / APPLIED

LOAD TYPE	CONTROL GRP	CONTROL CA	DEPTH EFFECTIVE (INCHES)	SHEAR APPLIED (KIPS)	SHEAR CAPACITY (KIPS)	RATIO
FAC			DY = 35.50	VY = 1360.	VUY = 2988.	2.20
EQ			DY = 35.50	VY = 2315.	VUY = 2988.	1.29

* NOTE: THE SHEAR PLANE AT DISTANCE "DX" IS OUTSIDE THE FOOTING DIMENSION.
THEREFORE, NO (VX) OR (VP) SHEAR CALCULATIONS ARE MADE.

****
* TOP AND BOTTOM FLEXURE RESULTS *
****

FOOTING DEPTH = 3.50 FT

BAR SIZE	BAR DIR	LOAD TYPE	CONTROL GRP	CONTROL CA	EFF DEPTH (IN)	APPLIED MOMENT (K-FT)	BAR SPACE (IN)	AREA REQ (SI)	BARS REQ	ERROR CODE
TOP										
5	X	MIN3			37.66	679.	17.28	4.03	13	
5	Y	EQ	PB7	1	36.97	1663.	11.47	12.29	40	
BOTTOM										
5	X	MIN2			36.66	285.	17.28	3.99	13	
11	Y	EQ	PB7	1	35.50	13764.	6.29	111.96	72	

DATE : 10/20/99 TIME : 14:18:13

PROJECT TITLE : SALT RIVER BRIDGES SCOUR - SOUTH CENTR PAGE : 10

****
* BOTTOM FLEXURAL REINFORCEMENT *
****

(AREA OF STEEL REQUIRED FOR DIFFERENT BAR SIZES)

BAR SIZE	BAR DIR	LOAD TYPE	APPLIED STRESS (PSI)	ALLOWABLE STRESS (PSI)	EFF DEPTH (IN)	BAR SPACE (IN)	REQ STEEL (SQ IN)	NO BARS	FOOT DEPTH (FT)	ERROR CODE
5	X	MIN2	17400.	24000.	36.66	15.95	4.16	14	3.50	
5	Y	EQ	18252.	36000.	35.97	1.24	112.50	363		1
6	X	MIN2	17212.	24000.	36.56	23.01	4.18	10	3.50	3
6	Y	EQ	18184.	34481.	35.68	1.73	113.52	259		1
7	X	MIN2	18049.	24000.	36.50	34.50	4.18	7	3.50	34
7	Y	EQ	18183.	30725.	35.50	2.35	114.19	191		1
8	X	MIN2	16052.	24000.	36.44	41.37	4.19	6	3.50	34
8	Y	EQ	18176.	27682.	35.31	3.08	114.91	146		1
9	X	MIN2	15257.	24000.	36.38	51.69	4.20	5	3.50	34
9	Y	EQ	18174.	25297.	35.13	3.88	115.58	116		2
10	X	MIN2	15060.	24000.	36.28	68.85	4.21	4	3.50	34
10	Y	EQ	18204.	24000.	34.84	4.91	116.66	92		
11	X	MIN2	16369.	24000.	36.19	103.19	4.22	3	3.50	34
11	Y	EQ	18108.	24000.	34.56	5.95	117.77	76		
14	X	MIN2	17073.	24000.	36.06	206.12	4.24	2	3.50	34
14	Y	EQ	17893.	24000.	34.18	8.42	119.25	54		
18	X	MIN2	9791.	24000.	35.75	205.50	4.27	2	3.50	34
18	Y	EQ	18065.	24000.	33.25	14.85	123.12	31		4

NOTE: THE DESIGNER MUST CHECK THE ERROR CODE FOR ADEQUATE DEVELOPMENT LENGTH AND BAR SPACING.

*** ERROR CODES:

1 = BAR SPACING LESS THAN THE AASHTO MINIMUM. (CODE 8.21.1)
2 = BAR SPACING LESS THAN THE PREFERRED CALTRANS MINIMUM. (BR. DES. DET.)
3 = BAR SPACING MORE THAN THE AASHTO MAXIMUM (18"). (CODE 8.20)
4 = INADEQUATE DEVELOPMENT LENGTH. (CODE 8.25)

DATE : 10/20/99 TIME : 14:18:13

PROJECT TITLE : SALT RIVER BRIDGES SCOUR - SOUTH CENTR PAGE : 11

****
* TOP FLEXURAL REINFORCEMENT *
****

(AREA OF STEEL REQUIRED FOR DIFFERENT BAR SIZES)

BAR SIZE	BAR DIR	LOAD TYPE	APPLIED STRESS (PSI)	ALLOWABLE STRESS (PSI)	EFF DEPTH (IN)	BAR SPACE (IN)	REQ STEEL (SQ IN)	NO BARS	FOOT DEPTH (FT)	ERROR CODE
4	X	MIN3	0.	24000.	37.72	17.29	2.60	13	3.50	
4	Y	EQ	0.	25254.	37.16	7.34	12.22	62		
5	X	MIN3	0.	24000.	37.66	17.28	4.03	13	3.50	
5	Y	EQ	0.	24000.	36.97	11.47	12.29	40		
6	X	MIN3	0.	24000.	37.56	17.26	5.72	13	3.50	4
6	Y	EQ	0.	24000.	36.68	15.97	12.39	29		
7	X	MIN3	0.	24000.	37.50	17.25	7.80	13	3.50	4
7	Y	MIN3	0.	24000.	36.50	17.88	15.60	26		

NOTE: THE DESIGNER MUST CHECK THE ERROR CODE FOR ADEQUATE DEVELOPMENT LENGTH AND BAR SPACING.

*** ERROR CODES:

1 = BAR SPACING LESS THAN THE AASHTO MINIMUM. (CODE 8.21.1)
2 = BAR SPACING LESS THAN THE PREFERRED CALTRANS MINIMUM. (BR. DES. DET.)
3 = BAR SPACING MORE THAN THE AASHTO MAXIMUM (18"). (CODE 8.20)
4 = INADEQUATE DEVELOPMENT LENGTH. (CODE 8.25)

DATE : 10/20/99 TIME : 14:18:13

PROJECT TITLE : SALT RIVER BRIDGES SCOUR - SOUTH CENTR PAGE : 12

****
* MINIMUM, PREFERRED BAR SPACING & DEVELOPMENT LENGTH *
****

UNITS INCHES

THE CLEAR DISTANCE BETWEEN PARALLEL BARS SHALL NOT BE LESS THAN
1.5 BAR DIAMETERS (NOMINAL), 1.5 TIMES THE MAXIMUM SIZE COURSE AGGREGATE,
NOR 1.5 INCHES. (CODE 8.21.1))

PREFERRED CENTER TO CENTER SPACING BASED ON BRIDGE DESIGN DETAILS P 13-20

BAR SIZE	BAR AREA	NOMINAL DIAMETER	MIN CLEAR DISTANCE	DEFORMED DIAMETER	MINIMUM C. TO C. SPACING	PREFERRED C. TO C. SPACING	DEVELOPMENT LENGTH SPC<6"	DEVELOPMENT LENGTH SPC>=6"
4	.20	.500	2.250	.563	2.813	3.250	12	12
5	.31	.625	2.250	.688	2.938	3.500	15	12
6	.44	.750	2.250	.875	3.125	3.750	19	15
7	.60	.875	2.250	1.000	3.250	4.000	26	20
8	.79	1.000	2.250	1.125	3.375	4.250	34	27
9	1.00	1.128	2.250	1.250	3.500	4.500	42	34
10	1.27	1.270	2.250	1.438	3.688	4.750	54	43
11	1.56	1.410	2.250	1.625	3.875	5.000	66	53
14	2.25	1.693	2.539	1.875	4.414	5.500	90	72
18	4.00	2.257	3.386	2.500	5.886	6.000	116	93

*** ERROR CODES:

1 = BAR SPACING LESS THAN THE AASHTO MINIMUM. (CODE 8.21.1)
2 = BAR SPACING LESS THAN THE PREFERRED CALTRANS MINIMUM. (BR. DES. DET.)
3 = BAR SPACING MORE THAN THE AASHTO MAXIMUM (18"). (CODE 8.20)
4 = INADEQUATE DEVELOPMENT LENGTH. (CODE 8.25)

DATE : 10/20/99 TIME : 14:18:13

PROJECT TITLE : SALT RIVER BRIDGES SCOUR - SOUTH CENTR PAGE : 13

****
* BAR REINFORCING STEEL *
****

BAR TYPE	BAR SIZE	NO BAR	LENGTH (FT)	WEIGHT (LB/FT)	WEIGHT (LBS)
TOP					
X-BAR	5	13	37.3	1.043	506.
Y-BAR	5	40	17.3	1.043	723.
BOTTOM					
X-BAR	5	13	37.3	1.043	506.
Y-BAR	11	72	17.3	5.313	6631.
STIRRUP	5	746	4.1	1.043	3177.

NOTE: STIRRUPS ARE REQUIRED IN A BAND EXTENDING 6 INCHES
MAXIMUM FROM THE COLUMN REINFORCEMENT TO
35 INCHES FROM THE FACE OF THE COLUMN IN THE "X" DIRECTION AND
87 INCHES FROM THE FACE OF THE COLUMN IN THE "Y" DIRECTION.

****
* QUANTITIES AND ESTIMATED COST - SPREAD FOOTING *
****

CONTRACT ITEM	UNIT	QUANTITY	PRICE	AMOUNT
STRUCTURE EXCAVATION (BR)	CY	469.	0.00	0.
STRUCTURE BACKFILL (BR)	CY	381.	0.00	0.
STRUCTURE CONCRETE, BR FTG	CY	89.	0.00	0.
BAR REINFORCEMENT (BR)	LB	11543.	0.00	0.
TOTAL COST				0.

DATE : 10/20/99 TIME : 14:18:13

PROJECT TITLE : SALT RIVER BRIDGES SCOUR - SOUTH CENTR PAGE : 14