Final Technical Drainage Memorandum
SR 202L Bridge Scour Evaluations for Salt River Bridge Pier Design

PACKAGE DESCRIPTION: Final Technical Drainage Memorandum — SR 202L Bridge Scour Evaluations for Salt River Bridge Pier Design	DATE: 3/31/2009	SUBMITTAL NO.: 042

The Design Task Manager and Design Manager certify that quality control activities have been conducted throughout the report preparation process in compliance with the Design Quality Management Plan and all contractual requirements.
The Design Task Manager and Design Manager certify that the deliverable is complete, checked and is being submitted as final.

COMMENTS:

RECEIVED
JUN 24 2009 4:40pm
STANLEY CONSULTANTS
SR202DB GC

SIGNED: Daniel E. Stough — DATE: 3/31/2009 — Daniel E. Stough 6-22-09 — DES 8/04/09
DESIGN TASK MANAGER

SIGNED: — DATE: 3/31/09 — 6-22-09 — BD 8/4/2009
DESIGN MANAGER

The Design Quality Assurance Manager (DQAM) certifies that the following reviews have been completed and that all comments have been resolved:
☒ Report Checking ☒ Design Coordination Reviews ☒ Independent Technical Review ☒ ADOT Oversight Review

The DQAM certifies that that design quality control procedures have followed the Design Quality Management Plan, that the Responsible Engineer has signed the report prepared under his or her direction, and by signing this release, the DQAM approves the audit process and procedures conducted in support of this approval.

COMMENTS:

SIGNED: Natalie Hyland — DATE: 4/2/09 — 6/24/09 — NO QA APPROVAL NEEDED - NO CHANGE SINCE 6/24 SUBMITTAL BD
DESIGN QUALITY ASSURANCE MANAGER

The KSJV Project Manager has verified that:
☑ The Report/ is complete and approved.

COMMENTS:

SIGNED: — DATE: 6/24/09 — 8/5/09
KSJV PROJECT MANAGER

The General Engineering Consultant Project Manager has accepted the Report.

RECEIVED
AUG 05 2009 11:06pm
STANLEY CONSULTANTS
SR202DB GC

COMMENTS:

SIGNED: R E Weston — DATE: 8/5/09
GEC PROJECT MANAGER

ADOT Project Manager has accepted the Report.

COMMENTS:

SIGNED: Annette Riley — DATE: 8/5/09
ADOT PROJECT MANAGER

Kiewit Joint Venture SUNDT

REPORT APPROVAL

RECEIVED
AUG 0 5 2009
KIEWIT /SUNDT JOINT VENTURE

PACKAGE DESCRIPTION: Final Technical Drainage Memorandum — SR 202L Bridge Scour Evaluations for Salt River Bridge Pier Design	DATE: 3/31/2009	SUBMITTAL NO.: 042

The Design Task Manager and Design Manager certify that quality control activities have been conducted throughout the report preparation process in compliance with the Design Quality Management Plan and all contractual requirements.
The Design Task Manager and Design Manager certify that the deliverable is complete, checked and is being submitted as final.

COMMENTS:

RECEIVED
JUN 2 4 2009 4:40pm
STANLEY CONSULTANTS
SR202DB GC

SIGNED: Daniel E. Stoughton DATE: 3/31/2009 Daniel E. Stoughton 6-22-09
DESIGN TASK MANAGER

SIGNED: DATE: 3/31/09 6-22-09
DESIGN MANAGER

DEJ 8/04/09
BD 8/4/2009

The Design Quality Assurance Manager (DQAM) certifies that the following reviews have been completed and that all comments have been resolved:
☒ Report Checking ☒ Design Coordination Reviews ☒ Independent Technical Review ☒ ADOT Oversight Review

The DQAM certifies that that design quality control procedures have followed the Design Quality Management Plan, that the Responsible Engineer has signed the report prepared under his or her direction, and by signing this release, the DQAM approves the audit process and procedures conducted in support of this approval.

COMMENTS:

SIGNED: Natalie Hyland DATE: 4/2/09
DESIGN QUALITY ASSURANCE MANAGER

6/24/09
NO QA APPROVAL NEEDED - NO CHANGE SINCE 042 SUBMITTAL
BD

The KSJV Project Manager has verified that:
☑ The Report/ is complete and approved.

COMMENTS:

SIGNED: DATE: 6/24/09
KSJV PROJECT MANAGER

8/5/09

The General Engineering Consultant Project Manager has accepted the Report.

RECEIVED
AUG 0 5 2009 11:06pm
STANLEY CONSULTANTS
SR202DB GC

COMMENTS:

SIGNED: DATE: 8/5/09
GEC PROJECT MANAGER

ADOT Project Manager has accepted the Report.

COMMENTS:

SIGNED: Annette Riley DATE: 8/5/09
ADOT PROJECT MANAGER

RECEIVED

AUG 0 5 2009

KIEWIT /SUNDT JOINT VENTURE

Kiewit Joint Venture SUNDT INDEPENDENT TECHNICAL REVIEW REPORT

Project Name:	*SR202L Widening Design-Build*
Project Element:	*Addendum No. 2 to Final Technical Drainage Memo Salt River Scour Evaluations for Pier Design*

Identifying Information

This section is to be completed by the Task Manager.

Assigned Independent Technical Reviewer: Dennis Jermeland

Deliverable to be reviewed: *Addendum No. 2 to Final Technical Drainage Memo Salt River Scour Evaluations for Pier Design*

Work Product Originator: Dave Schaub

Review Scope: *Review technical concepts with respect to AASHTO and ADOT specifications and guidelines; identify areas of design and/or construction risk.*

Reviewer's comments required by: *06/18/09*

Submitted by: Avi Schmerer — 06/18/09

Task Manager Signature — **Date**

Reviewer Report

This section is to be completed by the Independent Technical Reviewer.

Check box A **or** B:

A. ☐ Reviewer performed review and has no comments.

June 13, 2005

Independent Technical Reviewer Signature — **Date**

or

B. ☒ The Reviewer's comments have been provided on:

- ☐ Deliverable
- ☐ Review Comment Summary and Resolution Form (SQF #02.06-1)
- ☒ Other Redlines

This section is to be completed after verification of comment incorporation, if box B is checked off above.

Check box C **or** D and E:

C. ☒ Back-check of Reviewer's comments has been performed by Originator AND all issues have been resolved between Originator and Reviewer.

or

D. ☐ Unresolved issues have been submitted to the Task Manager, Design Manager or designee for resolution.

and

E. ☒ Verification of correct incorporation of resolved comments into final document is complete.

06/18/09

Independent Technical Reviewer Signature — **Date**

APPROVAL and DISTRIBUTION

*To be signed after box A **or** E are completed.*

☑ The review has been completed. Any significant issues not resolved between the Reviewer and the Originator have been resolved by the Approver.

6/22/09

Task Manager — **Date**

Distribution:

Project Central File – Quality folder

Addendum No. 2
to
Final Technical Drainage Memorandum

RECEIVED

AUG 0 5 2009

KIEWIT /SUNDT JOINT VENTURE

SR 202L
Bridge Scour Evaluations
for
Salt River Bridge Pier Design

Registered Professional Engineer (Civil) CERTIFICATE NO. 23663 DAVID J. SCHAUB Date Signed 6-23-09 ARIZONA U.S.A.

Expires 6/30/2010

June 23, 2009

INTRODUCTION

The Arizona Department of Transportation (ADOT) has contracted with Kiewit Sundt Joint Venture (KSJV) for the design/build widening of State Route 202L from SR51 to SR101. URS Corporation (URS) has prepared the *Final Technical Drainage Memorandum,* March 27, 2009. This memorandum documents the pier scour for the proposed widening of the SR 202L Bridges over the Salt River.

Subsequent to the publication of the Salt River Scour Report, it has been determined that the anticipated scour for two drilled shafts needs to be calculated. These drilled shafts are for the new outside columns for Piers 4 and 5 Eastbound. These columns are downstream of Grade Control Structure (G.C.S.) No. 5 and behind the CSA bank protection. Piers 5 and 4 are located 205 feet and 311 feet, respectively, downstream of the G.C.S. Piers 5 and 4 are located 50 feet and 70 feet, respectively, behind the CSA bank protection toedown. Although, it is considered improbable that a substantial portion of this bank protection would fail during the Superflood event, it is considered prudent to structurally design these new drilled shafts for the total scour of the Superflood Event. A scour depth is not required for the 100-year event, because the flow will be contained by the bank protection.

The remaining eastbound piers and Abutment No. 1 to the west have large setback distances from the CSA bank protection toedown and design for scour is not required. For example, the new outside column for Pier 3 is located 417 feet downstream of the G.C.S., and 113 feet behind the CSA bank protection toedown. Offset distances increase for the remaining structures to the west.

Piers 4 and 5 are located downstream of the HEC-RAS model used to evaluate the scour potential for the Salt River Bridge. The hydraulic data for these piers are contained in the original design document (CRSS Civil Engineers, Inc., *"Salt River Hydraulic Design Grade Control No.4 to McClintock Drive Bridge,"* August 1991). This document, which contains the design of CSA bank protection along this river reach, has not been located. Therefore, the water surface elevations at these piers were obtained from the As-Built construction documents as shown on attached Figure 10. Using this information, the recently surveyed streambed elevation, and the hydraulic characteristics at RS 120.5, the hydraulic characteristics at Piers 4 and 5 were determined as shown in attached revised Tables 5 and 6. The method of determining these characteristics is further described within these tables as Note 5.

The attached scour calculations are based on the information and methodology contained in the *Final Technical Drainage Memorandum,* March 27, 2009. The new scour calculations are contained in the following two tables:

- Table 2O – Pier 4EB Scour Calculations
- Table 2P – Pier 5EB Scour Calculations

The recommended scour hole bottom elevation for Piers 4EB and 5EB is 1124.0 for the Superflood flow. This value was determined with a circular drilled shaft diameter of 96" (8 feet). This scour elevation augments those contained in Table 1 of the *Final Technical Drainage Memorandum.*

RECEIVED

AUG 0 5 2009

KIEWIT /SUNDT JOINT VENTURE

TO ACCOMPANY ADDENDUM NO. 4

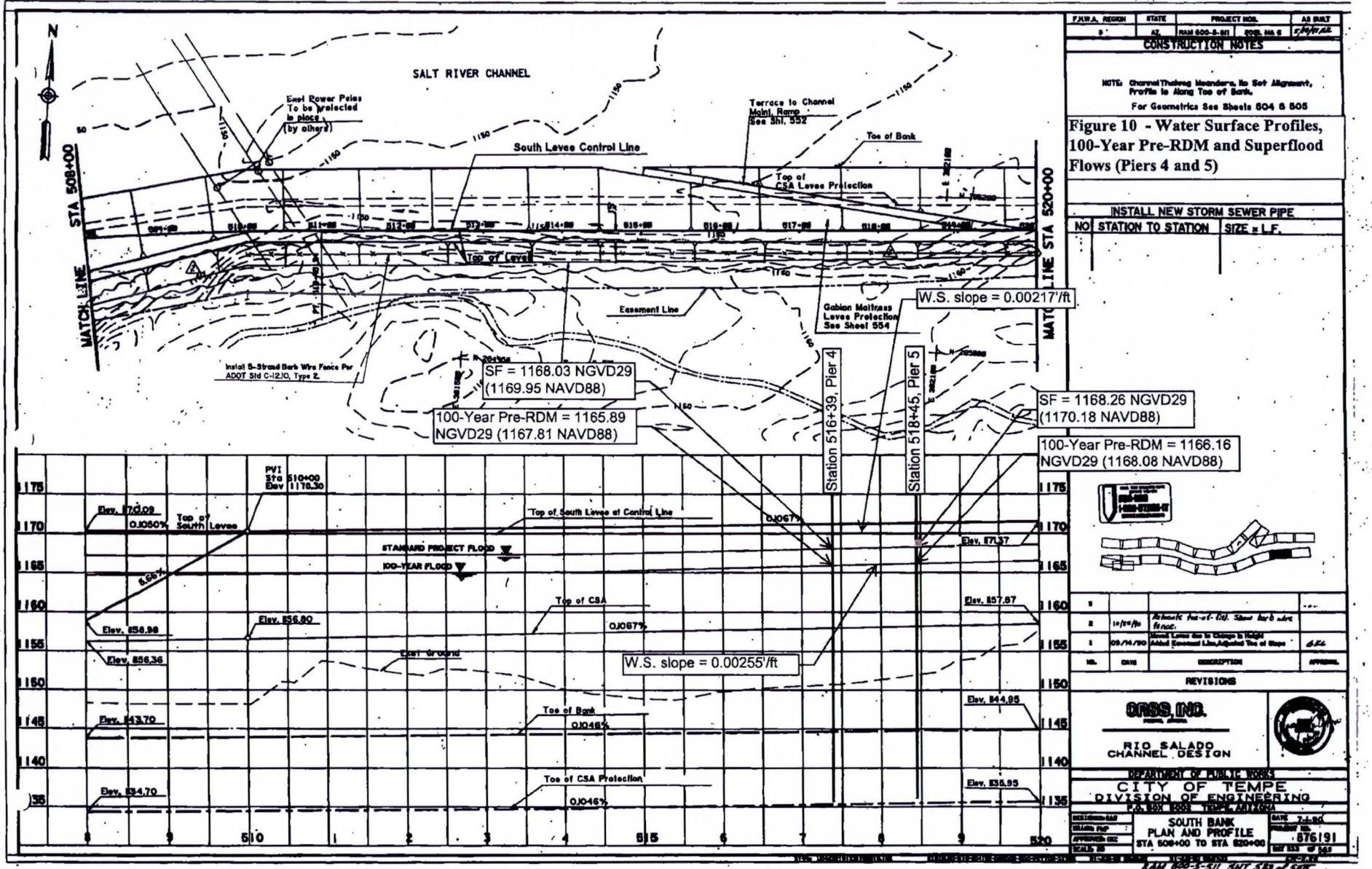

Figure 10 - Water Surface Profiles, 100-Year Pre-RDM and Superflood Flows (Piers 4 and 5)

TRACS NO. H0861 01 C

Table 2O

PIER SCOUR: FHWA (HEC 18) CSU Equation — ***ADOT CONTROLLING***

Project:	SR 202 Crossing of the Salt River	**Computed by:**	Dave Schaub
Location:	**Pier 4EB Scour Depth @ Bridge**	**Date:**	16-Jun-09
Description:	**Without Debris**	**Checked by:**	
	Elevations In 1988 Datum	**Date:**	
	HEC-RAS RS 120.50 Modified[1]		

ADOT Methodology

References:

1) FHWA, *Evaluating Scour At Bridges* (HEC-18), Fourth Edition, May 2001
2) ADOT, *Highway Drainage Design Manual-Hydraulics*, January 2006
3) Tucson, ***Standards Manual for Drainage Design & Floodplain Management***, (Revised July 98)
4) SLA Inc., ***Final Hydraulics & Scour Analysis Report-Salt River***, July 1997

Pier Input:

Pier Diameter:	8.00	ft
Debris:	0.00	ft on each side
Effective Pier Diameter (a):	8.00	ft

Hydraulic Input:

Storm Event (Years):	Post-100-yr	Pre-100-yr	SF
Flow, Q (cfs):	N/A	215,000	250,000
W.S.E., (ft):	N/A	1167.81	1169.95
Depth of Flow, Y_1 (ft):	N/A	23.81	25.95
Average Velocity, V_1 (fps):	N/A	9.87	10.40
Froude Number, Fr_1:	N/A	0.36	0.36

Correction Factors:

Pier Type, K_1 (ADOT Policy):	1.0	***Cylindrical Columns***
Angle of Attack, K_2:	1.0	
Bed Condition, K_3:	1.1	
Armouring, K_4:	1.0	

Particle Size: (Ref. 4)

D_{52}:	90.5	mm	3.563	inches
D_{89}:	181.0	mm	7.126	inches

Scour Equation: $Y_s/Y_1 = 2*K_1*K_2*K_3*K_4*(a/Y_1)^{0.65}Fr_1^{0.43}$

Local Pier Scour

Post-RDM 100-yr Scour Depth (ft)	**Y_s (Post 100-yr) =**	N/A	
Pre-RDM 100-yr Scour Depth (ft)	**Y_s (Pre 100-yr) =**		16.62
SF Scour Depth (ft)	**Y_s (SF) =**		17.12

Additional Scour Components

General Scour: Zeller Equation (1981)

General Scour (GS) (ft) at X-Section	N/A	0.00	0.00
General Scour (GS)(ft) Average, Station 120.5 to 238	N/A	1.44	2.29
General Scour (ft) Selected: larger of 2 above GSs	N/A	1.44	2.29
Long Term Degradation (ft) — Downstream Tempe Town Lake Dam	N/A	0	0
Bend Scour (ft)	N/A	0	0

Total Scour

Total Post-RDM 100-yr Scour Depth:	N/A		
Total Pre-RDM 100-yr Scour Depth:		18.06	
Total SF Scour Depth:			19.42
Min. Channel Elevation (Survey)(1988 Datum):	1144.00	1144.00	1144.00
Scour Hole Bottom Elevation:	**N/A**	**1125.94**	**1124.58**
Recommended Scour Hole Bottom Elevation:	**N/A**	**N/A**	**1124.00**

Notes:

1) The water surface elevations for the Pre-RDM 100-year and the Superflood events were obtained from As-Built Plan-Ram 600-5-511, Sheet 533-South Bank Plan & Profile. These elevations were converted to NAVD88 by adding 1.92 feet. The minimum channel elevation of 1144 was obtained from current project surveys. This information was used to revise the HEC-RAS Hydraulic Characteristics contained in revised Tables 5 and 6.

Table 2P

PIER SCOUR: FHWA (HEC 18) CSU Equation — ***ADOT CONTROLLING***

Project:	SR 202 Crossing of the Salt River	**Computed by:**	Dave Schaub
Location:	**Pier 5EB Scour Depth @ Bridge**	**Date:**	16-Jun-09
Description:	**Without Debris**	**Checked by:**	
	Elevations in 1988 Datum	**Date:**	
	HEC-RAS RS 120.50 Modified[1]		

ADOT Methodology

References:

1) FHWA, *Evaluating Scour At Bridges* (HEC-18), Fourth Edition, May 2001
2) ADOT, *Highway Drainage Design Manual-Hydraulics*, January 2006
3) Tucson, ***Standards Manual for Drainage Design & Floodplain Management***, (Revised July 98)
4) SLA Inc., ***Final Hydraulics & Scour Analysis Report-Salt River***, July 1997

Pier Input:

Pier Diameter:	8.00	ft
Debris:	0.00	ft on each side
Effective Pier Diameter (a):	8.00	ft

Hydraulic Input:

Storm Event (Years):	Post-100-yr	Pre-100-yr	SF
Flow, Q (cfs):	N/A	215,000	250,000
W.S.E., (ft):	N/A	1168.08	1170.18
Depth of Flow, Y_1 (ft):	N/A	24.04	26.18
Average Velocity, V_1 (fps):	N/A	9.76	10.31
Froude Number, Fr_1:	N/A	0.35	0.36

Correction Factors:

Pier Type, K_1 (ADOT Policy):	1.0	***Cylindrical Columns***
Angle of Attack, K_2:	1.0	
Bed Condition, K_3:	1.1	
Armouring, K_4:	1.0	

Particle Size: (Ref. 4)

D_{52}:	90.5	mm	3.563	inches
D_{89}:	181.0	mm	7.126	inches

Scour Equation: $Y_s/Y_1 = 2*K_1*K_2*K_3*K_4*(a/Y_1)^{0.65}Fr_1^{0.43}$

Local Pier Scour

Post-RDM 100-yr Scour Depth (ft)	**Y_s (Post 100-yr) =**	N/A	
Pre-RDM 100-yr Scour Depth (ft)	**Y_s (Pre 100-yr) =**		16.47
SF Scour Depth (ft)	**Y_s (SF) =**		17.18

General Scour: Zeller Equation (1981)

Additional Scour Components

General Scour (GS) (ft) at X-Section	N/A	0.00	0.00
General Scour (GS)(ft) Average, Station 120.5 to 238	N/A	1.44	2.29
General Scour (ft) Selected: larger of 2 above GSs	N/A	1.44	2.29
Long Term Degradation (ft) — Downstream Tempe Town Lake Dam	N/A	0	0
Bend Scour (ft)	N/A	0	0

Total Scour

Total Post-RDM 100-yr Scour Depth:	N/A		
Total Pre-RDM 100-yr Scour Depth:		17.92	
Total SF Scour Depth:			19.47
Min. Channel Elevation (Survey)(1988 Datum):	1144.00	1144.00	1144.00
Scour Hole Bottom Elevation:	**N/A**	**1126.08**	**1124.53**
Recommended Scour Hole Bottom Elevation:	**N/A**	**N/A**	**1124.00**

Notes:

1) The water surface elevations for the Pre-RDM 100-year and the Superflood events were obtained from As-Built Plan-Ram 600-5-511, Sheet 533-South Bank Plan & Profile. These elevations were converted to NAVD88 by adding 1.92 feet. The minimum channel elevation of 1144 was obtained from current project surveys. This information was used to revise the HEC-RAS Hydraulic Characteristics contained in revised Tables 5 and 6.

Table 5

Revised 17 June 2009 to include Piers 4 and 5[5]

HEC-RAS Hydraulic Characteristics

100-Year (215,000 cfs) Pre-RDM (Roosevelt Dam Modification)[1]

River Sta	Q Total	Min Ch El	W.S. Elev	Flow Depth	E.G. Slope	Vel Chnl	Flow Area	Top Width	Hydraulic Depth[2]	General Scour[3][4]	Froude # Chl
	(cfs)	(ft)	(ft)	(ft)	(ft/ft)	(ft/s)	(sq ft)	(ft)	(ft)	(ft)	
241.2	220,000	1,150.13	1180.22	30.09	0.000406	7.72	28637.69	1109.94	25.80	0.00	0.26
241.1	220,000	1,150.13	1180.21	30.08	0.000399	7.66	28846.21	1116.28	25.84	0.00	0.26
240.6	220,000	1,150.13	1180.19	30.06	0.000400	7.66	28830.54	1112.09	25.92	0.00	0.26
240.5	220,000	1,150.33	1180.16	29.83	0.000384	7.60	28744.77	1113.97	25.80	0.03	0.25
240.4	220,000	1,149.65	1180.16	30.51	0.000375	7.48	29518.98	1111.41	26.56	0.00	0.25
240.3	220,000	1,149.91	1180.06	30.15	0.000403	7.70	28727.35	1133.8	25.34	0.12	0.26
240.2	220,000	1,150.14	1179.97	29.83	0.000406	7.86	28083.15	1035.37	27.12	0.00	0.26
240.1	220,000	1,150.14	1179.95	29.81	0.000403	7.85	28003.59	1026.47	27.28	0.00	0.26
240	220,000	1,150.14	1179.9	29.76	0.000415	8.00	27491.90	1263.21	21.76	2.70	0.27
239	215,000	1,150.28	1179.17	28.89	0.000614	9.60	22509.06	1068.88	21.06	3.95	0.32
238	215,000	1,147.46	1178.99	31.53	0.000545	9.16	23580.48	1124.89	20.96	4.32	0.3
237	215,000	1,144.48	1178.72	34.24	0.000678	8.91	24124.88	1082.58	22.28	0.56	0.29
236	215,000	1,141.75	1177.67	35.92	0.001137	10.95	19638.42	909.42	21.59	1.41	0.35
235	215,000	1,140.40	1176.28	35.88	0.002033	12.74	16730.26	769.03	21.76	0.00	0.42
234	215,000	1,139.08	1174.81	35.73	0.002752	13.89	15371.51	803.03	19.14	0.43	0.47
233	215,000	1,139.58	1173.41	33.83	0.003008	14.46	14802.02	826.96	17.90	1.53	0.5
232	215,000	1,136.91	1172.68	35.77	0.002439	13.29	16024.42	886.19	18.08	1.29	0.45
231	215,000	1,138.86	1172.13	33.27	0.001903	12.25	17487.51	909.42	19.23	0.68	0.42
230	215,000	1,144.00	1171.17	27.17	0.002116	12.65	16996.08	743.89	22.85	0.00	0.46
229	215,000	1,142.07	1171.17	29.10	0.001219	10.16	21103.16	900	23.45	0.00	0.36
228	215,000	1,146.06	1170.78	24.72	0.001072	9.44	22235.20	1294.4	17.18	0.73	0.35
123.55	215,000	1,147.99	1169.64	21.65	0.001540	11.59	18484.59	1039.44	17.78	1.59	0.46
123.075	Bridge										
122.65	215,000	1,147.94	1168.75	20.81	0.001360	11.48	17861.15	1010.8	17.67	2.26	0.45
122	215,000	1,147.95	1168.7	20.75	0.001400	11.59	18090.06	1184.81	15.27	3.61	0.46
120.5	215,000	1,148.88	1168.51	19.63	0.001709	11.88	18235.28	1300.97	14.02	3.28	0.49
Number of Values		25.00	25.00	25.00		25.00			25.00	25.00	25.00
Average		1,146.18	1,175.74	29.56		10.14			21.67	1.14	0.36
Piers 5[5]	215,000	1,144.00	1168.08	24.08	0.002550	9.76	22017.78	1300.97	16.92	0.00	0.35
Piers 4[5]	215,000	1,144.00	1167.81	23.81	0.002550	9.87	21788.28	1300.97	16.75	0.00	0.36

Notes:

1. The HEC-RAS model was developed from project contour maps and field surveys to determine bank locations and the ground surface below water.
2. Hydraulic Depth Equation: HD = (Flow Area/Top Width)
3. General Scour Equation: $y_{gs} = y_{max}\{[(0.0685V_m^{0.8})/(y_h^{0.4}S_e^{0.3})]-1\}$

   Zeller Equation

   Where:
   - y_{gs} = general scour depth, (ft)
   - y_{max} = maximum depth of flow, (ft)
   - V_m = average velocity of flow, (fps)
   - y_h = hydraulic depth of flow, (ft)
   - S_e = energy slope, (ft/ft)
4. Minimum General Scour = Average of Scour Depths from River Station 120.5 to 238. GS_{ave} = 1.44
5. The HEC-RAS Hydraulic Characteristics for Piers 4 and 5 are base on a modification of the Hydraulic Characteristics for HEC-RAS RS 120.5. This modification was performed as follows:
   - a. The water surface elevations for the Pre-RDM 100-year and the Superflood events were obtained from As-Built Plan-Ram 600-5-511, Sheet 533-South Bank Plan & Profile.
   - b. The minimum channel elevation of 1144 was obtained from current project surveys.
   - c. The E.G. slope was set equal to the W.S. slope obtained from As-Built Plan-Ram 600-5-511, Sheet 533-South Bank Plan & Profile.
   - d. The flow area was increased by multiply the increase in water depth by the approximate channel bottom width of 850 feet. This width was set equal to the water width shown on current aerial photos. For example, Area (Pier 5) = 18235.28 + ((1148.88-1144.0)-(1168.51-1168.08)) x 850 = 22017.78.
   - e. The new channel velocity was determined with this new flow area.
   - f. The Froude # was computed with the standard formula: $F = V/(gD)^{0.5}$.

Table 6

Revised 17 June 2009 to include Piers 4 and 5[5]

HEC-RAS Hydraulic Characteristics

Superflood (250,000 cfs) Pre-RDM (Roosevelt Dam Modification)[1]

River Sta	Q Total	Min Ch El	W.S. Elev	Flow Depth	E.G. Slope	Vel Chnl	Flow Area	Top Width	Hydraulic Depth[2]	General Scour[3][4]	Froude # Chl
	(cfs)	(ft)	(ft)	(ft)	(ft/ft)	(ft/s)	(sq ft)	(ft)	(ft)	(ft)	
241.2	250,000	1,150.13	1182.83	32.70	0.000382	7.96	31542.84	1114.78	28.30	0.08	0.26
241.1	250,000	1,150.13	1182.83	32.70	0.000375	7.90	31768.00	1120.61	28.35	0.04	0.25
240.6	250,000	1,150.13	1182.8	32.67	0.000376	7.91	31747.22	1120	28.35	0.05	0.26
240.5	250,000	1,150.33	1182.77	32.44	0.000361	7.82	31666.59	1122.58	28.21	0.21	0.25
240.4	250,000	1,149.65	1182.77	33.12	0.000356	7.75	32448.91	1130.45	28.70	0.00	0.25
240.3	250,000	1,149.91	1182.68	32.77	0.000380	7.95	31626.18	1146.75	27.58	0.44	0.26
240.2	250,000	1,150.14	1182.58	32.44	0.000387	8.15	30789.97	1040.68	29.59	0.00	0.26
240.1	250,000	1,150.14	1182.56	32.42	0.000385	8.14	30685.07	1030.91	29.77	0.00	0.26
240	250,000	1,150.14	1182.5	32.36	0.000397	8.31	30114.48	1278.24	23.56	3.36	0.26
239	250,000	1,150.28	1181.66	31.38	0.000619	10.21	24617.50	1217.57	20.22	6.62	0.33
238	250,000	1,147.46	1181.48	34.02	0.000553	9.76	25747.25	1192.98	21.58	6.02	0.31
237	250,000	1,144.48	1181.2	36.72	0.000749	9.55	26266.84	1156.42	22.71	1.28	0.3
236	250,000	1,141.75	1179.99	38.24	0.001228	11.76	21239.11	920.81	23.07	1.81	0.37
235	250,000	1,140.40	1178.39	37.99	0.002225	13.72	18026.24	799.09	22.56	0.00	0.43
234	250,000	1,139.08	1176.73	37.65	0.003016	14.98	16535.83	819.02	20.19	0.90	0.49
233	250,000	1,139.58	1176.09	36.51	0.002509	13.77	18194.78	979.48	18.58	1.67	0.45
232	250,000	1,136.91	1174.7	37.79	0.002667	14.34	17299.90	906.51	19.08	1.86	0.47
231	250,000	1,138.86	1174.13	35.27	0.002064	13.18	18871.86	982.71	19.20	1.99	0.44
230	250,000	1,144.00	1173.13	29.13	0.002247	13.53	18457.40	773.63	23.86	0.00	0.47
229	250,000	1,142.07	1173.18	31.11	0.001292	10.87	22906.89	1106.99	20.69	0.36	0.37
228	250,000	1,146.06	1172.8	26.74	0.001103	10.01	24339.46	1376.63	17.68	1.54	0.36
123.55	250,000	1,147.99	1171.64	23.65	0.001502	12.15	20510.26	1063.61	19.28	2.06	0.46
123.075	Bridge										
122.65	250,000	1,147.94	1170.71	22.77	0.001313	12.01	19844.82	1116.39	17.78	3.61	0.45
122	250,000	1,147.95	1170.68	22.73	0.001353	12.14	20094.48	1363.16	14.74	5.64	0.46
120.5	250,000	1,148.88	1170.51	21.63	0.001622	12.37	20377.73	1569.96	12.98	5.68	0.48
Number of Values		25.00	25.00	25.00		25.00			25.00	25.00	25.00
Average		1,146.18	1,178.05	31.88		10.65			22.66	1.81	0.36
Piers 5[5]	250,000	1,144.00	1170.18	26.18	0.002170	10.31	24245.23	1569.96	15.44	0.00	0.36
Piers 4[5]	250,000	1,144.00	1169.95	25.95	0.002170	10.40	24049.73	1569.96	15.32	0.00	0.36

Notes:

1. The HEC-RAS model was developed from project contour maps and field surveys to determine bank locations and the ground surface below water.
2. Hydraulic Depth Equation: HD = (Flow Area/Top Width)
3. General Scour Equation: $y_{gs} = y_{max}\{[(0.0685V_m^{0.8})/(y_h^{0.4}S_e^{0.3})]-1\}$

   Zeller Equation

   Where:
   - y_{gs} = general scour depth, (ft)
   - y_{max} = maximum depth of flow, (ft)
   - V_m = average velocity of flow, (fps)
   - y_h = hydraulic depth of flow, (ft)
   - S_e = energy slope, (ft/ft)
4. Minimum General Scour = Average of Scour Depths from River Station 120.5 to 238. GS_{ave} = 2.29
5. The HEC-RAS Hydraulic Characteristics for Piers 4 and 5 are base on a modification of the Hydraulic Characteristics for HEC-RAS RS 120.5. This modification was performed as follows:
   a. The water surface elevations for the Pre-RDM 100-year and the Superflood events were obtained from As-Built Plan-Ram 600-5-511, Sheet 533-South Bank Plan & Profile.
   b. The minimum channel elevation of 1144 was obtained from current project surveys.
   c. The E.G. slope was set equal to the W.S. slope obtained from As-Built Plan-Ram 600-5-511, Sheet 533-South Bank Plan & Profile.
   d. The flow area was increased by multiply the increase in water depth by the approximate channel bottom width of 850 feet. This width was set equal to the water width shown on current aerial photos. For example, Area (Pier 5) = 20377.73 + ((1148.88-1144.0)-(1170.51-1170.18)) x 850 = 24245.23.
   e. The new channel velocity was determined with this new flow area.
   f. The Froude # was computed with the standard formula: $F = V/(gD)^{0.5}$.

Kiewit Joint Venture SUNDT

INDEPENDENT TECHNICAL REVIEW REPORT

Project Name:	*SR202L Widening Design-Build*
Project Element:	*Addendum No. 1 to Drainage Final Technical Memo Salt River Scour Evaluations for Pier Design*

Identifying Information

This section is to be completed by the Task Manager.

Assigned Independent Technical Reviewer: Dennis Jermeland

Deliverable to be reviewed: *Final technical Drainage Memorandum, SR202l, Bridge Scour Evluations, Salt river bridge*

Work Product Originator: Dave Schaub

Review Scope: *Review technical concepts with respect to AASHTO and ADOT specifications and guidelines; identify areas of design and/or construction risk.*

Reviewer's comments required by: *05/28/09*

Submitted by: Avi Schmerer — 05/27/09

Task Manager Signature — **Date**

Reviewer Report

This section is to be completed by the Independent Technical Reviewer.

Check box A **or** B:

A. ☐ Reviewer performed review and has no comments.

Independent Technical Reviewer Signature — **Date**

or

B. ☒ The Reviewer's comments have been provided on:

- ☐ Deliverable
- ☐ Review Comment Summary and Resolution Form (SQF #02.06-1)
- ☒ Other Redlines

This section is to be completed after verification of comment incorporation, if box B is checked off above.

Check box C **or** D and E:

C. ☒ Back-check of Reviewer's comments has been performed by Originator AND all issues have been resolved between Originator and Reviewer.

or

D. ☐ Unresolved issues have been submitted to the Task Manager, Design Manager or designee for resolution.

and

E. ☒ Verification of correct incorporation of resolved comments into final document is complete.

Dennis Jermeland — 05/28/2009

Independent Technical Reviewer Signature — **Date**

APPROVAL and DISTRIBUTION

*To be signed after box A **or** E are completed.*

☑ The review has been completed. Any significant issues not resolved between the Reviewer and the Originator have been resolved by the Approver.

RC Ling — 6/19/09

Task Manager — **Date**

Distribution:

Project Central File – Quality folder

Addendum No. 1
to
Final Technical Drainage Memorandum

SR 202L
Bridge Scour Evaluations
for
Salt River Bridge Pier Design

Registered Professional Engineer (Civil)
CERTIFICATE NO. 23663
DAVID J. SCHAUB
Date Signed 5-27-09
ARIZONA U.S.A.

Expires 6/30/2010

May 27, 2009

INTRODUCTION

The Arizona Department of Transportation (ADOT) has contracted with Kiewit Sundt Joint Venture (KSJV) for the design/build widening of State Route 202L from SR51 to SR101. URS Corporation (URS) has prepared the *Final Technical Drainage Memorandum,* March 23, 2009. This memorandum documents the pier scour for the proposed widening of the SR 202L Bridges over the Salt River.

Subsequent to the publication of the Salt River Scour Report, it has been determined that the anticipated scour for one pier drilled shaft needs to be revised and the scour needs to be determined for the east abutment drilled shaft. These drilled shafts are for the new outside column for Pier 33 Westbound and for the new outside column for Abutment 02 Eastbound, Ramp ES. For Pier 33 Westbound, the new column and existing adjacent column have less than the 16-foot clearance, and therefore, it is necessary to assume an equivalent column width. This larger width results in a greater scour depth. For Abutment 02 Eastbound, the column is just behind the CSA bank, and therefore, it is necessary to design for scour from the Superflood flow event. A scour depth is not required for the 100-year event, because the flow will be contained by the CSA bank.

The attached scour calculations are based on the information and methodology contained in the *Final Technical Drainage Memorandum,* March 23, 2009. The new scour calculations are contained in the following two tables:

- Table 2M – Pier 33WB Scour Calculations
- Table 2N – Abutment 02EB, Ramp E-S Scour Calculations

The recommended scour hole bottom elevations at Pier 33WB for the Pre-RDM 100-year and the Superflood flows are 1108.0 and 1106.0, respectively. These values have been determined with an equivalent column width of 15.75 feet for the new 78"/96" column/drilled shaft adjacent to the existing 96"/108" column/drilled shaft. The equivalent width was determined by adding the two column widths and the radius increase for each column/drilled shaft. These scour elevations supersede those shown for Pier 33WB in Table 1 of the *Final Technical Drainage Memorandum.* The memorandum contains scour depths based on the premise that all new piers are located at a minimum clear distance of 16 feet from adjacent existing columns. This is correct for all columns except Pier 33WB.

The recommended scour hole bottom elevation at Abutment 02EB, Ramp E-S for the Superflood flow is 1114.0. This value has been determined with an equivalent column width of 12.0 feet for the new 72" column/drilled shaft and the adjacent existing 72" column/drilled shaft. The equivalent width was determined by adding the two column widths. Scour values for this abutment are not contained in the *Final Technical Drainage Memorandum.*

Table 2M

78"/96" and 96"/108" Columns/Drilled Shafts acting as a Single Unit (15.75')[1]

PIER SCOUR: FHWA (HEC 18) CSU Equation — ***ADOT CONTROLLING***

Project:	SR 202 Crossing of the Salt River	**Computed by:**	Dave Schaub
Location:	**Pier 33WB Scour Depth @ Bridge**	**Date:**	27-May-09
Description:	**15.75' Equivalent Drilled-Shaft Without Debris[1]**	**Checked by:**	
	Elevations in 1988 Datum	**Date:**	
	HEC-RAS RS 236		

ADOT Methodology

References:
1) FHWA, *Evaluating Scour At Bridges* (HEC-18), May 2001 &
2) ADOT, *Highway Drainage Design Manual-Hydraulics*, January 2006
3) Tucson, ***Standards Manual for Drainage Design & Floodplain Management***, (Revised July 98)
4) SLA Inc., ***Final Hydraulics & Scour Analysis Report-Salt River***, July 1007

Pier Input:

Pier Diameter:	15.75	ft
Debris:	0.00	ft on each side
Effective Pier Diameter (a):	15.75	ft

Hydraulic Input:

Storm Event (Years):	Post-100-yr	Pre-100-yr	SF
Flow, Q (cfs):	169,000	215,000	250,000
W.S.E., (ft):	1174.04	1177.67	1179.99
Depth of Flow, Y_1 (ft):	32.29	35.92	38.24
Average Velocity, V_1 (fps):	9.87	10.95	11.76
Froude Number, Fr_1:	0.34	0.35	0.37

Correction Factors:

Pier Type, K_1 (ADOT Policy):	1.0	***Cylindrical Columns***
Angle of Attack, K_2:	1.0	
Bed Condition, K_3:	1.1	
Armouring, K_4:	1.0	

Particle Size:

D_{52}:	90.5	mm	3.563	inches
D89:	181.0	mm	7.126	inches

Scour Equation: $Y_s/Y_1 = 2*K_1*K_2*K_3*K_4*(a/Y_1)^{0.65}Fr_1^{0.43}$

Local Pier Scour

Pre-RDM 100-yr Scour Depth (ft)	**Y_s (Post 100-yr) =**	28.01	
Post-RDM 100-yr Scour Depth (ft)	**Y_s (Pre 100-yr) =**		29.44
SF Scour Depth (ft)	**Y_s (SF) =**		30.82

Additional Scour Components

General Scour: Zeller Equation

General Scour (GS) (ft) at X-Section	0.94	1.41	1.81
General Scour (GS)(ft) Average, Station 120.5 to 238	0.63	1.44	2.29
General Scour (ft) Selected: larger of 2 above GSs	0.94	1.44	2.29
Long Term Degradation (ft) — Downstream Grade Control Structure	0	0	0
Bend Scour (ft)	0	0	0

Total Scour

Total Post-RDM 100-yr Scour Depth:	28.96		
Total Pre-RDM 100-yr Scour Depth:		30.89	
Total SF Scour Depth:			33.12
Min. Channel Elevation (HEC-RAS)(1988 Datum):	1141.75	1141.75	1141.75
Min. Channel Elevation Selected:	1139.08	1139.08	1139.08
Scour Hole Bottom Elevation:	**1110.12**	**1108.19**	**1105.96**
Recommended Scour Hole Bottom Elevation:	**N/A**	**1108.00**	**1106.00**

(1) Proposed Column & Existing Column have less than 16-foot clear distance, and therefore, it is necessary to assume an equivalent Column Width as follows:
Added 9" to 78" Column and 6" to 96" Column to account for 96" & 108" Drilled-Shafts
Equivalent Width = (9"+78") (6"+96") = 15.75 (ft)

Table 2N

72-inch & 72-Inch Drilled Shafts acting as a Single Unit (12')[1][2]

PIER SCOUR: FHWA (HEC 18) CSU Equation — ***ADOT CONTROLLING***

Project:	SR 202 Crossing of the Salt River	**Computed by:**	Dave Schaub
Location:	**Abut 02 EB Ramp E-S Scour Depth @ Bridge**	**Date:**	27-May-09
Description:	**12.00' Equivalent Drilled-Shaft Without Debris[1]**	**Checked by:**	
	Elevations in 1988 Datum	**Date:**	
	HEC-RAS RS 237		

ADOT Methodology

References:
1) FHWA, *Evaluating Scour At Bridges* (HEC-18), May 2001 &
2) ADOT, *Highway Drainage Design Manual-Hydraulics*, January 2006
3) Tucson, *Standards Manual for Drainage Design & Floodplain Management*, (Revised July 98)
4) SLA Inc., *Final Hydraulics & Scour Analysis Report-Salt River*, July 1007

Pier Input:

Pier Diameter:	12.00	ft
Debris:	0.00	ft on each side
Effective Pier Diameter (a):	12.00	ft

Hydraulic Input:

Storm Event (Years):	Post-100-yr	Pre-100-yr	SF
Flow, Q (cfs):	169,000	215,000	250,000
W.S.E., (ft):	1174.92	1178.72	1181.20
Depth of Flow, Y_1 (ft):	30.44	34.24	36.72
Average Velocity, V_1 (fps):	8.07	8.91	9.55
Froude Number, Fr_1:	0.28	0.29	0.30

Correction Factors:

Pier Type, K_1 (ADOT Policy):	1.0	***Cylindrical Columns***
Angle of Attack, K_2:	1.0	
Bed Condition, K_3:	1.1	
Armouring, K_4:	1.0	

Particle Size:

D_{52}:	90.5	mm	3.563	inches
D89:	181.0	mm	7.126	inches

Scour Equation: $Y_s/Y_1 = 2*K_1*K_2*K_3*K_4*(a/Y_1)^{0.65}Fr_1^{0.43}$

Local Pier Scour

Pre-RDM 100-yr Scour Depth (ft)	**Y_s (Post 100-yr) =**	21.15	
Post-RDM 100-yr Scour Depth (ft)	**Y_s (Pre 100-yr) =**		22.38
SF Scour Depth (ft)	**Y_s (SF) =**		23.27

General Scour: Zeller Equation

Additional Scour Components

General Scour (GS) (ft) at X-Section	0.08	0.56	1.28
General Scour (GS)(ft) Average, Station 120.5 to 238	0.63	1.44	2.29
General Scour (ft) Selected: larger of 2 above GSs	0.63	1.44	2.29
Long Term Degradation (ft) — Downstream Grade Control Structure	0	0	0
Bend Scour (ft)	0	0	0

Total Scour

Total Post-RDM 100-yr Scour Depth:	21.78		
Total Pre-RDM 100-yr Scour Depth:		23.82	
Total SF Scour Depth:			25.56
Min. Channel Elevation (HEC-RAS)(1988 Datum):	1144.48	1144.48	1144.48
Min. Channel Elevation Selected:	1139.08	1139.08	1139.08
Scour Hole Bottom Elevation:	**1117.30**	**1115.26**	**1113.52**
Recommended Hole Bottom Elevation:	**N/A**	**N/A**	**1114.00**

(1) Proposed Column & Existing Column have less than 16-foot clear distance (17' C-C), and therefore, it is necessary to assume an equivalent Column Width as follows:
72" Column/Drilled-Shaft and 72" Column/Drilled-Shaft
Equivalent Width = 72 + 72 = 12 (ft)

(2) Column is located behind the CSA bank, and therefore, it only needs to be structurally designed for the Superflood Flow Event.

Final Technical Drainage Memorandum

SR 202L
Bridge Scour Evaluations
for
Salt River Bridge Pier Design

Registered Professional Engineer (Civil)
CERTIFICATE NO. 23863
DAVID J. SCHAUB
Date Signed 3-27-09
ARIZONA U.S.A.
Expires 6/30/2010

March 27, 2009

INTRODUCTION

The Arizona Department of Transportation (ADOT) has contracted with Kiewit Sundt Joint Venture (KSJV) for the design/build widening of State Route 202L from SR51 to SR101. URS Corporation (URS) has prepared the following memorandum to document the pier scour for the proposed widening of the SR 202L Bridges over the Salt River. Supporting figures and tables include:

FIGURES

- Figure 1 – Project Location Map
- Figure 2 – Salt River Bridge Foundation Plans – Drawings S-21.32 thru S-21.55
- Figure 3 – HEC-RAS Cross-Sections Map
- Figure 4 - Salt River, Stage-Discharge Curve, Grade Control Structure #5
- Figure 5 – Chart for Estimating F_{bo} (After Blench)
- Figure 6 – HEC-RAS Water Surface Profiles, Pre-RDM 100-Year & Superflood
- Figure 7 – HEC-RAS Cross-Sections
- Figure 8 – 100-Year Pre-RDM Scour Profile, Salt River Bridge
- Figure 9 – Superflood Pre-RDM Scour Profile, Salt River Bridge

TABLES

- Table 1 – Pier Scour Summary-Recommended Scour Inverts-ADOT Methodology
- Table 2 – Pier Scour Summary-ADOT Methodology
  - Table 2A – Pier 8EB/6WB Scour Calculations
  - Table 2B – Pier 9EB/7WB Scour Calculations
  - Table 2C – Pier 11EB/9WB Scour Calculations
  - Table 2D – Pier 14EB/12WB Scour Calculations
  - Table 2E – Pier 17EB/15WB Scour Calculations
  - Table 2F – Pier 20EB/18WB Scour Calculations
  - Table 2G – Pier 23EB/21WB Scour Calculations
  - Table 2H – Pier 25EB/23WB Scour Calculations
  - Table 2I – Pier 28EB/26WB Scour Calculations
  - Table 2J – Pier 31EB/29WB Scour Calculations
  - Table 2K – Pier 34EB/32WB Scour Calculations
  - Table 2L – Pier 37EB/35WB Scour Calculations
- Table 3 – General Scour Calculations-100-Year (169,000 cfs) Post-RDM
- Table 4 – General Scour Calculations-100-Year (215,000 cfs) Pre-RDM
- Table 5 – General Scour Calculations-Superflood (250,000 cfs) Pre-RDM

- Table 6 – HEC-RAS Report

DESIGN PROCEDURE

The following outline provides the reviewer the design procedure used. Arizona Department of Transportation (ADOT) and Flood Control District of Maricopa County (FCDMC) have slightly different methodologies on estimating scour depths. These differences are discussed in the following procedure. The procedure steps are summarized in the order they were performed and should be the approach taken when reviewed.

Scour Methodology for Piers

The total scour is comprised of several scour components. These are discussed as follows:

1. ***Contraction Scour:*** Contraction scour is a form of scour occurring at a particular location, such as a bridge crossing. The channelization and bank protection along the Salt River has significantly reduced the probability of contraction scour. The most significant portion of contraction scour is when overbank flow is redirected around the abutment into the main channel. The Initial Drainage Report recommended a value of zero (0) for contraction scour and this report concurs with this recommendation.

2. ***General Scour:*** General scour consists of the vertical lowering of the channel bed over relatively short time periods, usually during a single flood event. For the ADOT Methodology, the general scour is determined with the Zeller (1981) equation. For the FCDMC Methodology, the general scour is determined as the average of values determined with the Lacey and Blench equations.

3. ***Long-Term Degradation:*** Use a value of zero because of the Grade Control Structure #5 (G.C.S. #5) located just downstream of the McClintock Bridge and the downstream Tempe Town Lake Dams (the nearest one is located just upstream of the Salt River/Indian Bend Wash confluence). The grade control structure and dams will limit the degradation of the Salt River. The existing thalweg depression upstream of G.C.S. #5 is the remnant of historic aggregate mining within this river reach. The existing overall reach slope through the depressed area is definitely below the equilibrium slope. The Simons, Li and Associates, Inc., report entitled, *"Final Hydraulic & Scour Analysis Report, Salt River, East Papago Freeway,"* July 1997 estimated the equilibrium slope through the bridge reach to be 0.00037 ft/ft. Therefore, the existing thalweg depression is in an aggrading condition and over time the depression is expected to fill in.

4. ***Low-Flow Incisement***: Use a value of zero because of G.C.S. #5 and the Salt River Dams as explained for long-term degradation. Review of field surveys indicates that low-flow incisement has not occurred within the vicinity of the SR 202L Bridge crossing of Salt River. In fact, there is a permanent lake just upstream of the grade control structure that was created by historic aggregate mining within the river bed. The depressed area is approximately one mile long with a maximum depth of 12.0 feet below the grade control structure. Since the total scour depth will be subtracted from the existing low thalweg, a low-flow incisement value is not considered necessary.

5. ***Bed-Form Scour:*** Two types of bed-form scour are anti-dune scour and dune scour. Anti-dunes can form either during transitional flow, between subcritical and supercritical flow, or during

supercritical flow. Transitional flow conditions do not occur through this reach of the Salt River. Use a value of zero (0) for anti-dune scour. The Salt River is not a sand bed watercourse and dune scour is not anticipated. Use a value of zero (0) for dune scour.

6. ***Local-Pier Scour:*** Local pier scour is computed with the CSU equation for both live-bed and clear-water pier scour. The equation predicts maximum pier scour depths. Values need to be determined for four (4) factors. These are K_1, K_2, K_3, and K_4. The ADOT Hydraulic Drainage Design Manual considers the pier shape to be affected by debris and considers K_1 as 1.1. However, the Salt River water depth is substantially greater than 12 feet and the calculation without debris provides a greater scour depth. Therefore, K_1 is 1.0, which is in agreement with ADOT's direction at a December 9, 2008 project coordination meeting. The other factors, as stated in the ADOT manual, are $K_2 = 1.0$ (round columns, no correction for 15 degree angle of flow between flow direction and alignment of pier), $K_3 = 1.1$ (plane bed conditions), and $K_4 = 1.0$ (no decrease due to streambed armoring). For this equation, it is assumed that the bed material is sufficiently fine-grained so that the material gradation does not affect the predicted scour.

The total pier scour is determined as follows:

1. ***Design Flows:***
   a. ADOT stated in the Request for Proposals (RFP) that the scour depths shall be determined for the Critical Design Flow of 215,000 cfs and the Super Flood Flow of 250,000 cfs. The U.S. Army Corps of Engineers stated that the Pre-Roosevelt Dam Modification (Pre-RDM) Salt River design flows are 215,000 cfs for the 100-year flow and 250,000 cfs for the Superflood Flow. ADOT requires that bridge foundations be designed to withstand scour from the lesser of the 500-year flood event or the event causing overtopping of the approach roadway. The bridge needs to also withstand the 100-year flood event. For these scour calculations, the 100-year flood event is assumed to be the Critical Design Flow of 215,000 cfs and the 500-year flood event is assumed to be the Superflood flow of 250,000 cfs.
   b. FCDMC has agreed that the pier scour "Zone-of-Influence" on the existing bank protection and grade control structure can be determined using the Post Roosevelt Dam Modification (Post-RDM) 100-year peak flow of 169,000 cfs.
2. ***Scour Components other than Local Pier Scour:*** Calculate these scour components as discussed above.
3. ***Local-Pier Scour:*** The ADOT Bridge Hydraulic Guidelines recommends increasing the pier width by 2 feet on both sides of the pier to account for debris. Other ADOT guidelines state that the debris should be assumed to be the depth of water, but no greater than 12 feet. Flow depths within this reach of the Salt River are substantially greater than 12 feet for all discharges. The guidelines also state that when the clear distance between columns is less than 16 feet, then methods described in HEC 18 shall be used to estimate equivalent effective widths. The proposed 6.5-foot diameter columns are placed at a clear distance of 16 feet or greater. The drilled shafts have a diameter of 8-foot. Since debris is not placed around the 6.5-foot diameter columns, the 8-foot shaft will be used for the determination of local pier scour.

4. ***Factor of Safety:*** The ADOT Methodology does not recommend a factor of safety and none is applied to these calculations. The FCDMC Methodology recommends a thirty percent (30%) factor of safety. The factor of safety need not be applied to the local pier scour when it is computed with 2 feet of debris around the column. Since debris has not been added to the columns, the factor of safety is applied to all scour components as well as the local pier scour.

5. ***Recommended Scour Invert:*** The "Initial Drainage Report," October 2007 used average hydraulic characteristics for the twelve cross-sections through the bridge length of the river to determine the total scour depth at all piers. As explained for long-term degradation and low-flow incisement, the depressed area upstream of G.C.S. # 5 results in tremendous vertical differences (0 to 12 feet below the top of G.C.S.#5) in the thalweg throughout the length of the approximately 1 mile long bridge. As a result, each cross-section exhibits different hydraulic characteristics, which produce different scour depths. The average scour for the entire reach would over-estimate total scour on the upgrade approach from the low thalweg to G.C.S. #5 and under-estimate scour within the low thalweg of the depression. Furthermore, the piers, spaced at 140-foot intervals, are perpendicular to the direction of flow. Each pier could be a single bridge crossing of the Salt River. Therefore, this evaluation determined the total scour depth for each pier bent based on the hydraulic characteristics of the river at that location. The scour invert elevation of the scour hole at each pier was determined by subtracting the total scour from the lowest channel invert (thalweg) along the river cross-section at that pier bent. Recommended scour inverts were then determined for six (6) pier groups along the bridge length to simplify the structural design of the bridge. This concept was also used on the original bridge design.

HECRAS MODEL

Salt River through the SR 202L Bridge site and Grade Control Structure #5 is modeled using the U.S. Army Crops of Engineers' HEC-RAS (Version 4.0). The results of the model are summarized in Tables 3 through 6. The preparation of the HEC-RAS model is described below:

1. ***Methodology:*** The HEC-RAS model has the ability to compute water surface elevations for three (3) flow regimes: Subcritical, Supercritical, and Mixed. Supercritical flow does not occur through this reach of the Salt River, and therefore, the Subcritical Flow Regime was selected as the most realistic flow regime and the most applicable for design purposes.

2. ***Topographic Data Set:*** Topographic data were obtained from field surveys, recently flown contour maps, and as-built plans. The as-built plans are based on the NGVD29 datum and the current project plans are based on the NAVD88 datum. The as-built elevations were converted to the NAVD88 datum by adding 1.92 feet to the as-built plan elevations. The HEC-RAS model is based on the NAVD88 datum. The project contours were developed from aerial surveys and do not reflect the ground elevation within the large lake located both upstream and downstream of Grade Control Structure #5. Field surveys were performed in 2009 to determine the location of the Cement Stabilized Alluvium (CSA) banks and the bottom of the pond. These data were used to create a revised contour map for this evaluation.

3. ***River Cross-Section Locations:*** The river cross-section identification numbers and locations are set to those used by SLA, Inc. in the HEC-2 model developed for the report entitled, *"Hydraulic and Sediment Transport Analysis Report, Salt River Bank Protection Design, South Bank Upstream of Pima Freeway, Bank Sta. 33+00 to 73+00,"* April 1994.

4. ***Thalweg Depression, Cross-Section 120.5 to 239:*** As previously discussed under long term degradation and low-flow incisement, the river reach from Cross-Section (G.C.S. #5) 120.5 to 239 is depressed below the grade control structure a maximum of 12 feet at Cross-Section 232. Because the length of this depression is approximately 1 mile, it is anticipated that during major flow events flow would occur at full depth through the depressed area. This is a conservative approach since the total scour depths will be subtracted from the current lowest thalweg elevation.

5. ***Thalweg Adjustments, Cross-Section 120.5 to 239:*** Figure 8 and 9 show a smoothing of the thalweg between Cross-Sections 120.5 and 239. During the rising limb of a major event, some smoothing of the thalweg ridges and valleys is anticipated. It is anticipated that the ridge at Cross-Section 230 would be flattened and that the upstream rising portion of the thalweg would be scoured as shown on the figures. The scour material could be assumed to fill the low point at Cross-Section 232. However, this evaluation assumed that the material would not redeposit within this reach and that the low point would remain. These adjustments were not made in the HEC-RAS model, but were used to determine the low point of each channel cross-section. The scour invert for each pier was then determined by subtracting the total estimated pier scour depth from the smoothed channel invert.

6. ***Existing and Proposed SR 202L Bridge Piers:*** These piers are modeled as obstructions in the cross-sections.

7. ***Existing SR101L Bridge Piers:*** Approximately 1200 feet upstream (distance along south bank of Salt River) the SR101L bridges cross the Salt River in a south-north direction. These bridges are modeled with Cross-Sections 240.1, 240.3, 240.5, and 241.1. The piers for these bridges were not included in the model because they would not affect the velocity or the water surface elevations at the downstream cross-sections. This reach of the river is in subcritical flow and that means the hydraulic conditions of the river are balanced between cross-sections in a downstream to upstream direction. For this project, the subcritical flow calculations begin at downstream G.C.S. #5 and proceed upstream through the SR 202 L Bridge, prior to reaching the SR 101L bridges.

8. ***Boundary Conditions:*** Subcritical flow regime was used for this analysis, and therefore, boundary conditions are required at downstream Grade Control Structure #5, River Station 120.5. Based on current survey, the low point of the grade control structure is 1148.88. The downstream flow discharges into Tempe Town Lake, which has a normal surface elevation of 1149.6 based on field survey. The boundary conditions at the grade control structure were obtained from SLA, Inc., report entitled, *"Bridge Hydraulics Report, Pima Freeway Crossing of the Salt River,"* October 1992. The HEC-2 data in this report contains a stage-discharge table for 10-year, 20-year, 50-year, and Superflood flows. These values were used to plot the stage-discharge curve for Grade Control Structure #5 (see Figure 4). The stages were corrected to the project NAVD88 Datum. The starting elevations at the grade control structure were obtained from these data. These data show the Superflood starting elevation to be 1170.80. However, this historic report used a starting elevation of 1170.51, which is critical flow, for the Superflood. Therefore, this current scour evaluation also used a starting elevation of 1170.51.

9. ***Energy Loss Coefficients:*** Roughness coefficients were determined based on streambed material. Manning's 'n' roughness coefficients selected are: 0.02 for the CSA, and 0.035 for any wired-tied riprap upper bank protection and the bottom of the channel. Any existing

vegetation within the channel is assumed to be removed during extreme flow events. Contraction/expansion loss coefficients were set at 0.1/0.3 for this relatively straight channel and at 0.3/0.5 through the McClintock Bridge.

10. ***Channel Reach Lengths:*** Channel reach lengths between cross-sections were taken along and parallel to an assumed channel thalweg that is located approximately half-way between the hardbanks. Flow will occur in this manner during extreme flow events.

SALT RIVER PEAK FLOW FREQUENCIES

The U.S. Army Corps of Engineers developed peak flow frequencies (10-, 20-, 50-, 100-year, and Superflood) for Salt River during the Gila River and Tributaries hydrologic study in 1982. These flows were documented by Simons, Li and Associates, Inc., in the report entitled, "*Hydraulic and Scour Analysis for the East Papago Crossing of Indian Bend Wash,*" March 1990. The Superflood value of 250,000 cfs was used by Simons, Li and Associates, Inc., in the report entitled, *"Bridge Hydraulics Report, Pima Freeway Crossing of the Salt River,"* October 1992. These peak flows and frequencies are:

PRE-ROOSEVELT DAM MODIFICATION DISCHARGES	
Return Period or Description	**Peak Discharge (cfs)**
10-year	93,000
20-year	135,000
50-year	160,000
100-year	215,000
Superflood	250,000

After completion of the Roosevelt Dam Modification, the U.S. Army Corps of Engineers performed a second study on discharge to frequency relationships at select points within the Gila River Basin. The peak flows and frequencies for the Salt River at the Mill Avenue Bridge are:

POST-ROOSEVELT DAM MODIFICATION DISCHARGES	
Return Period (years)	**Peak Discharge (cfs)**
10-year	55,000
50-year	140,000
100-year	169,000
500-year	243,000

ADOT stated in the RFP that the scour depths shall be determined for the Critical Design Flow of 215,000 cfs (100-year Pre-RDM) and the Superflood Flow of 250,000 cfs. These values were used in this evaluation. FCDMC has agreed that the pier scour "Zone-of-Influence" on the existing bank protection can be determined with the Post-RDM 100-year peak flow of 169,000 cfs.

CHANNEL BED ARMORING

For this reach of the Salt River, armoring analysis was performed by Simons, Li and Associates, Inc., and documented in the report entitled, *"Final Hydraulic & Scour Analysis Report, Salt River, East Papago Freeway,"* July 1997. This analysis estimated an armor depth of 4.8 feet, and an equilibrium slope of 0.00037 ft/ft.

Sediment transport calculations were performed using the balanced hydrograph and the characteristic Salt River grain size distributions. This report states that, "Two bed-material populations are typically present in the Salt River. One represents a surface armor layer, while the other represents a subsurface parent material." The report also states that, "These representative gradations are consistent with composite sediment routing gradations used by SLA on several reaches of the Salt River. This report does not contain any additional references to a soils report to document these gradations. Cursory reviews of previous reports show some documentation for these values.

These two gradations are as follows:

Particle Size (mm)	Surface Material (Percent Finer)	Subsurface Material (Percent Finer)
362	100	100
181	89	95
90.5	52	76
45.2	44	69
22.6	35	60
11.31	28	52
5.66	21	44
2.00	16	36
0.500	8	21
0.125	3	11

These gradations are presented here for information only since ADOT does not consider a reduction in scour depth based on armoring of the bed material, and therefore, $K_4 = 1.0$ in the pier scour equation. Furthermore, the bed material gradation does not affect the scour calculations contained in this report.

SCOUR CALCULATIONS FOR PIERS AND RECOMMENDATIONS

Based on a 9 December 2008 meeting with the FCDMC it was agreed that the design of the bridge piers may be in accordance with ADOT's scour methodology and the determination of the pier scour "Zone-of-Influence" on the existing bank protection and grade control structure will be in accordance with FCDMC's scour methodology. This Technical Memorandum contains scour calculations (ADOT Methodology) for the design of the bridge. Scour calculations (FCDMC Methodology) for determining the pier scour "Zone-of-Influence" on the CSA banks and grade control structure will be under a separate Technical Memorandum.

Table 1 summarizes the recommended scour parameters and depths developed by the ADOT Methodology that should be used for the structural design of the new foundations.

Table 2 summarizes the calculated scour parameters and depths developed by the ADOT Methodology. This table also contains scour depths for the Post RDM 100-year flow of 169,000 cfs. These calculations are included for information only, and are not to be used to perform the structural design for the bridge foundations.

Tables 2A through 2L are the scour calculation sheets for new bridge columns near a HEC-RAS cross-section. As stated above, these calculation sheets contain scour depths for the Post RDM 100-year flow of 169,000 cfs. These calculations are for information only, and are not for bridge foundation design.

Tables 3 through 5 summarize the general scour calculations and the hydraulic characteristics (averages velocities and flow depths) for the three peak flows modeled with the HEC-RAS program.

Table 6 is the HEC-RAS report for two required design flows (215,000 cfs and 250,000 cfs).

A review of previous design reports indicates that the existing bank protection has been designed for the Post-RDM 100-year flow of 215,000 cfs. Therefore, it is recommended that new columns located within the existing bank protection be structurally designed for scour from only the Superflood flow of 250,000 cfs. These new columns will not experience scour during the 100-year event. The foundations for new columns not protected by bank protection will need to be structurally designed for total scour depths determined by the ADOT Methodology for the Critical Design flow and the Superflood flow.

F.H.W.A. REGION	STATE	PROJECT NO.	SHEET NO.	TOTAL SHEETS	AS BUILT
9	ARIZ.	202-A-NFA			
		202L MA 000			

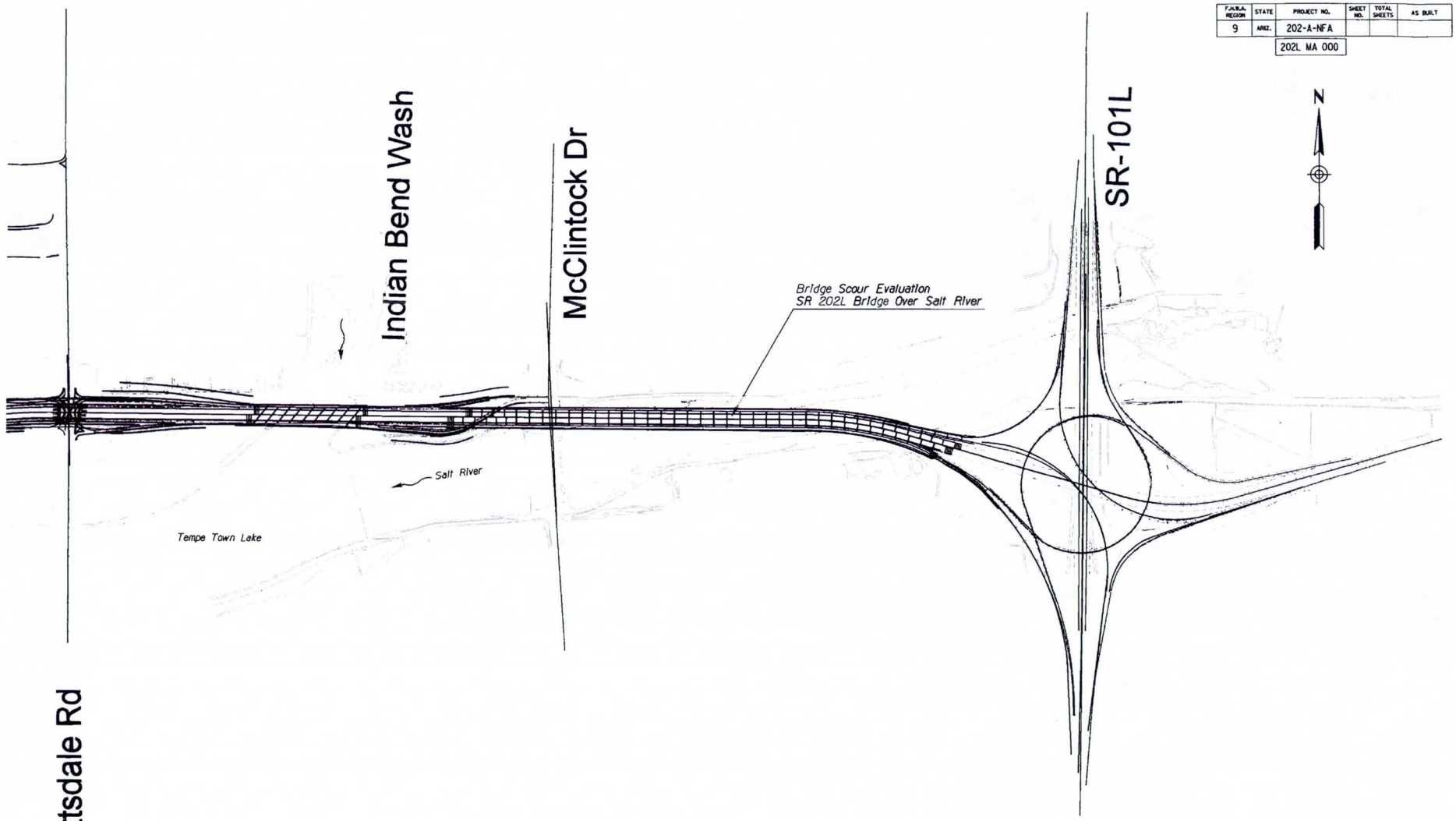

REV	DATE	DESCRIPTION	BY
	/ /		
	/ /		
	/ /		
	/ /		
	/ /		
	/ /		
	/ /		
	/ /		
	/ /		

	NAME	DATE
DESIGN	D. SCHAUB	02/09
DRAWN	K. BEGAY	02/09
CHECKED		02/09

URS

ARIZONA DEPARTMENT OF TRANSPORTATION
INTERMODAL TRANSPORTATION DIVISION
ROADWAY DESIGN SERVICES

FIGURE 1
PROJECT LOCATION MAP

ROUTE	LOCATION
SR 202L	SR 202/SR 51 TI TO SR 101L

TRACS NO. H6871 01C | 202-A-NFA

PRELIMINARY
sub%
Review
NOT FOR CONSTRUCTION OR RECORDING

DWG NO
___ OF ___

P:\TRANSPORTATION\Kiewit\SR 202 Design Build\CADD\Exhibits\Drainage\CADD\Plan\h6871ex3.dgn
3/3/2009 12:50:39 PM

F.A.H.A. REGION	STATE	PROJECT NO.	SHEET NO.	TOTAL SHEETS	AS BUILT
9	ARIZ.	202-A-NFA			
		202L MA 0			

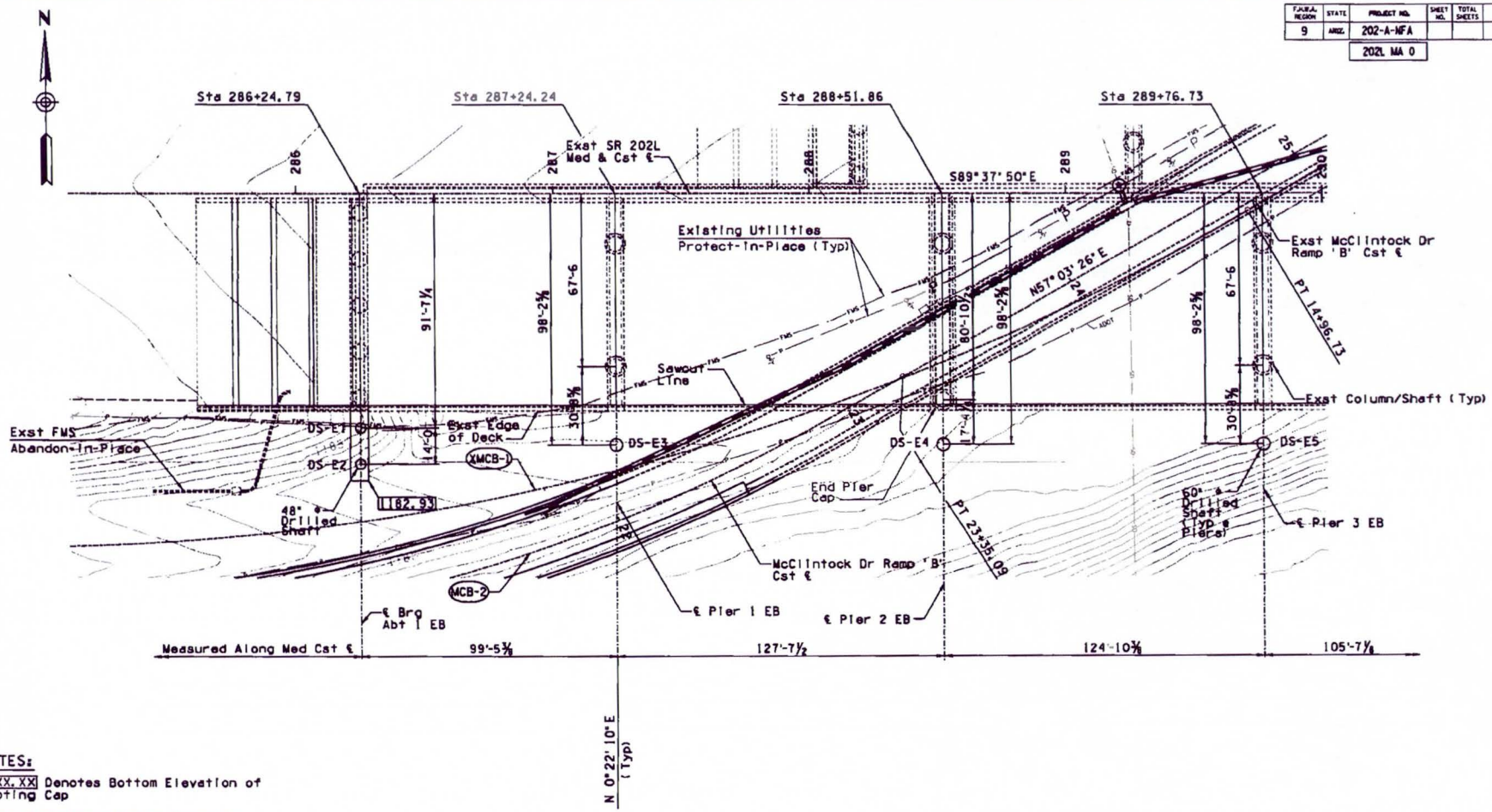

NOTES:

XXXX.XX Denotes Bottom Elevation of Footing Cap

Final Foundation Design Report by DMJM Harris dated November 2007.

Refer to Geotechnical Technical Memorandum No. 4 Bridge Foundation Recommendations by HDR dated February 13, 2009 for further foundation/geotechnical data.

Exst electrical conduit located in exterior bridge barrier to be removed and relocated.

Exst FMS hung between exst exterior girders to remain. Protect in place.

PARTIAL FOUNDATION PLAN EASTBOUND

Scale: 1" = 20'-0

Figure 2 (1 of 24)

REV	DATE	DESCRIPTION	BY
0	/ /		
	/ /		
	/ /		
	/ /		
	/ /		
	/ /		
	/ /		
	/ /		
	/ /		
	/ /		

	NAME	DATE
DESIGN	JRP	11/09
DRAWN	DMC	11/09
CHECKED	DMH	11/09

TALIN INTERNATIONAL
Civil and Structural Engineers

ROUTE	MILEPOST	STRUCTURE NO.
202L	8.17	2268/2269

TRACS NO. H6871 01 C

ARIZONA DEPARTMENT OF TRANSPORTATION
INTERMODAL TRANSPORTATION DIVISION
BRIDGE GROUP

STA 286+
SALT RIVER BRIDGE EB & WB WDNG
FOUNDATION PLAN EB 1
I-10 / SR 51 - SR 101L

202-A-NFA

PRELIMINARY
95%
Reviewer
NOT FOR CONSTRUCTION OR RECORDING

DWG. S-21 . 32 OF 133

___ OF ___

DESIGN FILE: P:\SR 202 Design Build\CADD\Plans\Structures\TY Lin Bridges\221679.00 202 Design Build\CADD\2268 Salt River EB\180X\32.S2268_FP1.dgn
DATE: 2/23/2009 TIME: 11:48:31 AM

FEDERAL REGION	STATE	PROJECT NO.	SHEET NO.	TOTAL SHEETS	AS BUILT
9	ARIZ.	202-A-NFA			

202L MA 0

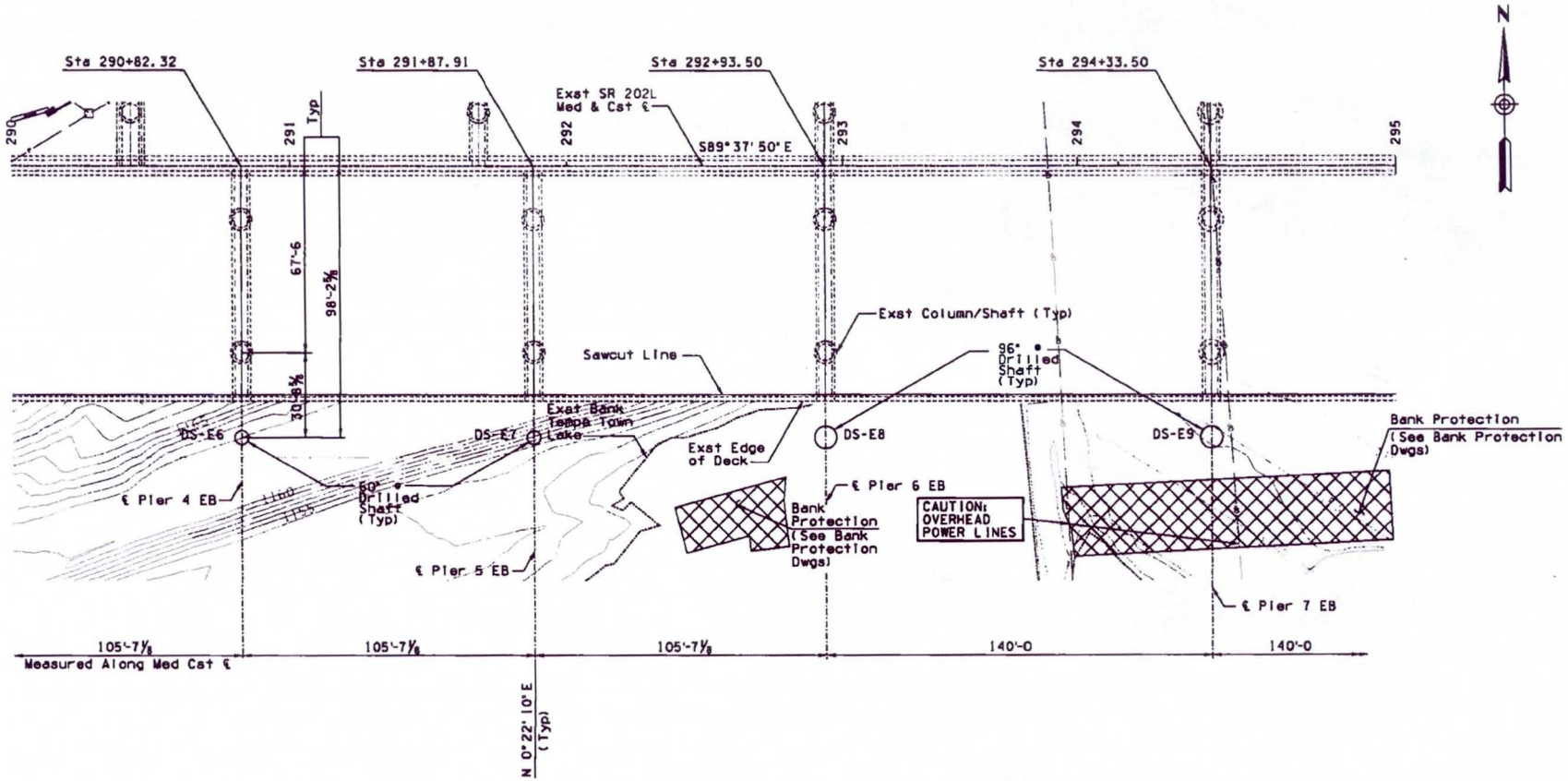

PARTIAL FOUNDATION PLAN EASTBOUND

Scale: 1" = 20'-0

Figure 2 (2 of 24)

REV	DATE	DESCRIPTION	BY
0	/ /		
	/ /		
	/ /		
	/ /		
	/ /		
	/ /		
	/ /		
	/ /		
	/ /		

	NAME	DATE
DESIGN	JRP	11/08
DRAWN	DMC	11/08
CHECKED	DMH	11/08

TYLIN INTERNATIONAL
Civil and Structural Engineers

ROUTE	MILEPOST	STRUCTURE NO.
202L	8.17	2268/2269

TRACS NO. H6871 01 C

ARIZONA DEPARTMENT OF TRANSPORTATION
INTERMODAL TRANSPORTATION DIVISION
BRIDGE GROUP

STA 286+
SALT RIVER BRIDGE EB & WB WDNG
FOUNDATION PLAN EB 2

I-10 / SR 51 - SR 101L

202-A-NFA

PRELIMINARY
95%
Review
NOT FOR CONSTRUCTION OR RECORDING

DWG. S-21 , 33 OF 133

___ OF ___

DESIGN FILE: P:\SR 202 Design Build\CADD\Plans\Structures\TY Lin Bridges\221679.00 202 Design Build\CADD\2268 Salt River EB\100%\33.S2268_FP2.dgn
DATE: 2/23/2009 TIME: 11:48:46 AM

FEDERAL REGION	STATE	PROJECT NO.	SHEET NO.	TOTAL SHEETS	AS BUILT
9	ARIZ.	202-A-NFA			
		202L MA 0			

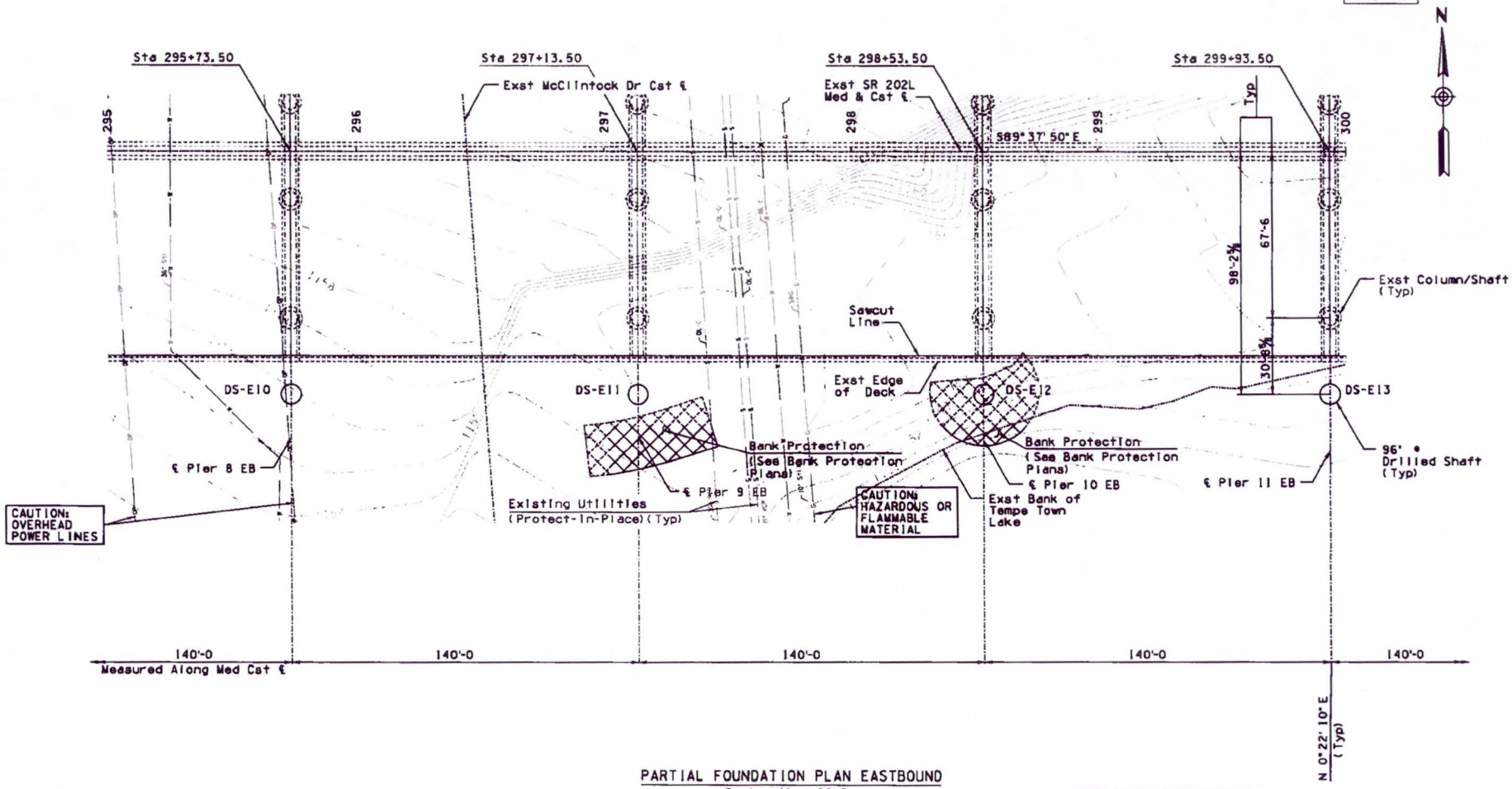

PARTIAL FOUNDATION PLAN EASTBOUND
Scale: 1" = 20'-0

Figure 2 (3 of 24)

REV	DATE	DESCRIPTION	BY
1	/ /		
	/ /		
	/ /		
	/ /		
	/ /		
	/ /		
	/ /		
	/ /		
	/ /		
	/ /		

	NAME	DATE
DESIGN		
DRAWN		
CHECKED		

TAYLOR INTERNATIONAL
Civil and Structural Engineers

ROUTE	MILEPOST	STRUCTURE NO.
202L	8.17	2268/2269

TRACS NO. H6871 01 C

ARIZONA DEPARTMENT OF TRANSPORTATION
INTERMODAL TRANSPORTATION DIVISION
BRIDGE GROUP

STA 286+
SALT RIVER BRIDGE EB & WB WDNG
FOUNDATION PLAN EB 3

I-10 / SR 51 - SR 101L

202-A-NFA

PRELIMINARY
95%
Review
NOT FOR CONSTRUCTION OR RECORDING

DWG. S-21 .34 OF 133

___ OF ___

DESIGN FILE: P:\SR 202 Design Build\CADD\Plans\Structures\TY Lin Bridges\221679.00 202 Design Build\CADD\2268 Salt River EB\100X\34_S2268_FP3.dgn
DATE: 2/23/2009 TIME: 11:48:59 AM

F.H.W.A. REGION	STATE	PROJECT NO.	SHEET NO.	TOTAL SHEETS	AS BUILT
9	ARIZ.	202-A-NFA			
		202L MA 0			

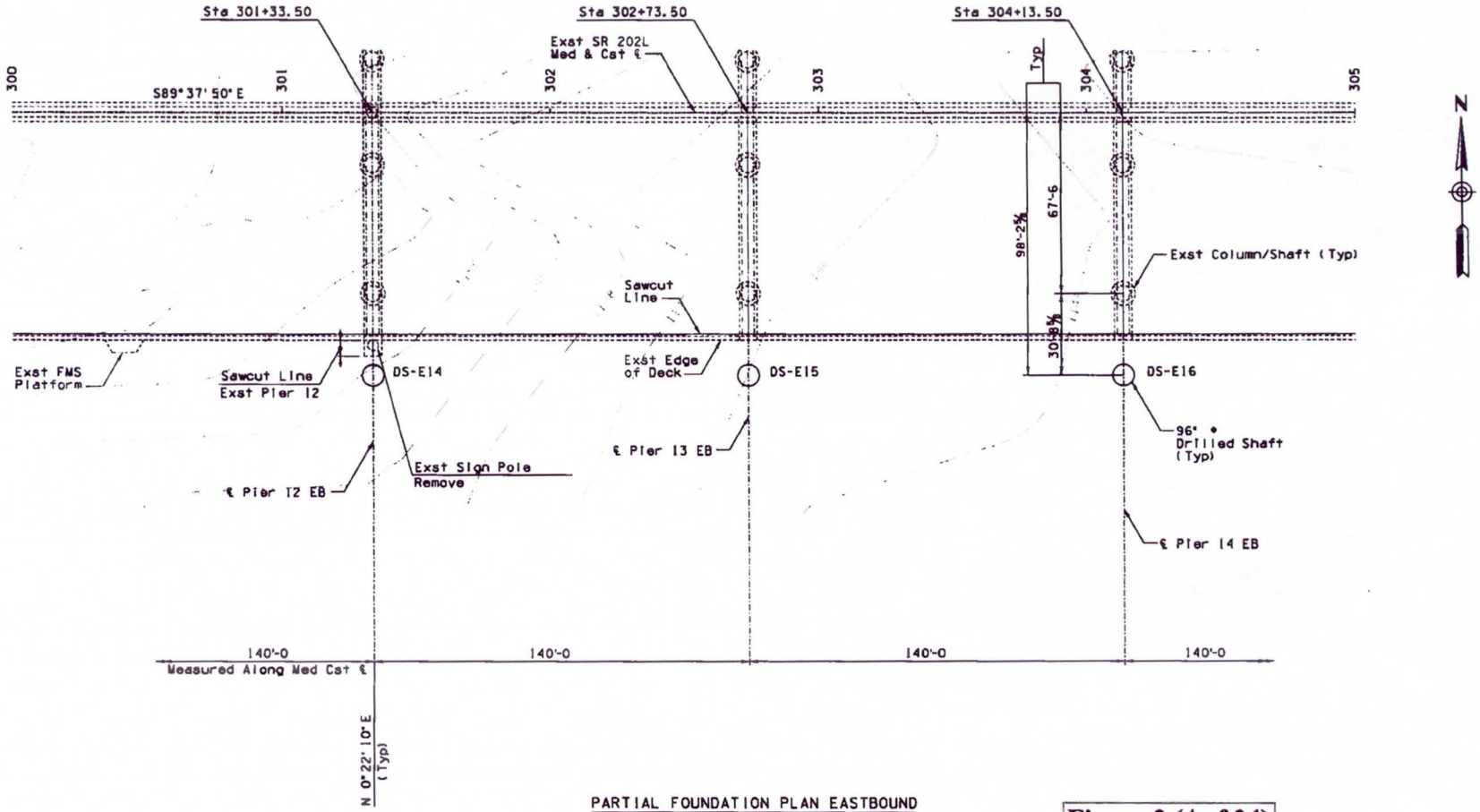

PARTIAL FOUNDATION PLAN EASTBOUND

Scale: 1" = 20'-0

Figure 2 (4 of 24)

REV	DATE	DESCRIPTION	BY
0	/ /		
	/ /		
	/ /		
	/ /		
	/ /		
	/ /		
	/ /		
	/ /		
	/ /		
	/ /		

	NAME	DATE
DESIGN	JRP	11/08
DRAWN	GMC	11/08
CHECKED	QNH	11/08

TYLIN INTERNATIONAL
Civil and Structural Engineers

ROUTE	MILEPOST	TRACEABLE NO.
202L	8.17	2268/2269

ARIZONA DEPARTMENT OF TRANSPORTATION
INTERMODAL TRANSPORTATION DIVISION
BRIDGES GROUP

STA 286+
SALT RIVER BRIDGE EB & WB WDNG
FOUNDATION PLAN EB 4

I-10 / SR 51 - SR 101L

TRACS NO. H6871 01 C | 202-A-NFA

PRELIMINARY
95%
Review
NOT FOR CONSTRUCTION OR RECORDING

DWG. S-21 . 35 OF 133

___ OF ___

DESIGN FILE: P:\SR 202 Design Build\CADD\Plans\Structures\TY Lin Bridges\221679.00 202 Design Build\CADD\2268 Salt River EB\100%\35_S2268_FP4.dgn
DATE: 2/23/2009 TIME: 11:49:18 AM

FEDERAL REGION	STATE	PROJECT NO.	SHEET NO.	TOTAL SHEETS	AS BUILT
9	ARIZ.	202-A-NFA			
		202L MA 0			

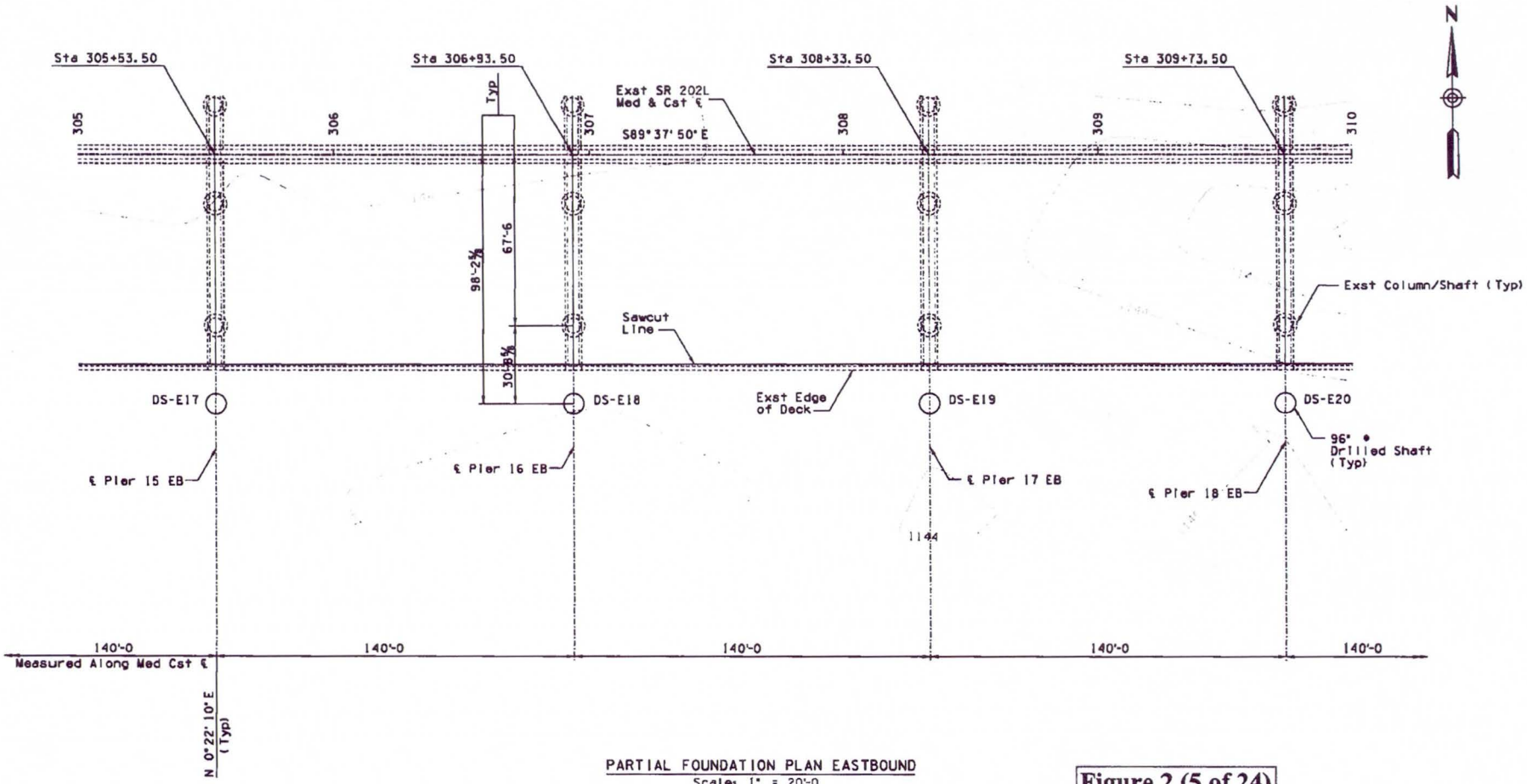

PARTIAL FOUNDATION PLAN EASTBOUND

Scale: 1" = 20'-0

Figure 2 (5 of 24)

REV	DATE	DESCRIPTION	BY
0	/ /		
	/ /		
	/ /		
	/ /		
	/ /		
	/ /		
	/ /		
	/ /		
	/ /		
	/ /		

	NAME	DATE
DESIGN	JRP	11/08
DRAWN	CMC	11/08
CHECKED	DMH	11/08

TYLIN INTERNATIONAL
Civil and Structural Engineers

ROUTE	MILEPOST	STRUCTURE NO.
202L	8.17	2268/2269

TRACS NO. H6871 01 C

ARIZONA DEPARTMENT OF TRANSPORTATION
INTERMODAL TRANSPORTATION DIVISION
BRIDGE GROUP

STA 286+
SALT RIVER BRIDGE EB & WB WDNG
FOUNDATION PLAN EB 5

I-10 / SR 51 - SR 101L

202-A-NFA

PRELIMINARY
95%
Reviewer
NOT FOR CONSTRUCTION OR RECORDING

DWG. S-21 .36 OF 133

___ OF ___

DESIGN FILE: P:\SR 202 Design Build\CADD\Plans\Structures\TY Lin Bridges\221679.00 202 Design Build\CADD\2268 Salt River EB\100%\36.S2268.FP5.dgn
DATE: 2/23/2009 TIME: 11:49:31 AM

F.A.H.A. REGION	STATE	PROJECT NO.	SHEET NO.	TOTAL SHEETS	AS BUILT
9	ARIZ.	202-A-NFA			

202L MA 0

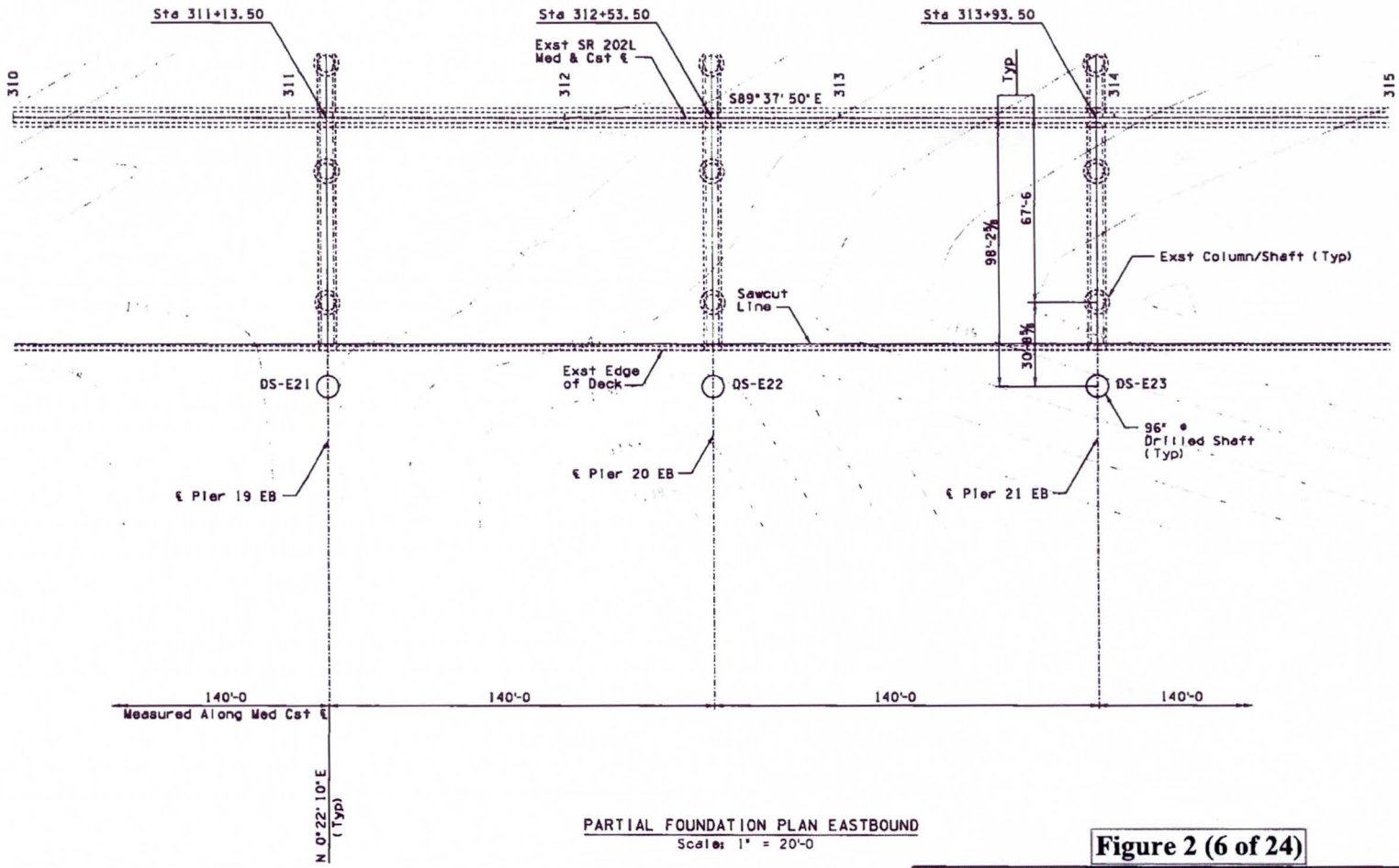

PARTIAL FOUNDATION PLAN EASTBOUND
Scale: 1" = 20'-0

Figure 2 (6 of 24)

REV	DATE	DESCRIPTION	BY
0	/ /		
	/ /		
	/ /		
	/ /		
	/ /		
	/ /		
	/ /		
	/ /		
	/ /		
	/ /		

	NAME	DATE
DESIGN	JRP	11/08
DRAWN	DMC	11/08
CHECKED	DMH	11/08

TALIN INTERNATIONAL
Civil and Structural Engineers

ROUTE	MILEPOST	STRUCTURE NO.
202L	8.17	2268/2269

TRACS NO. H6871 01 C

ARIZONA DEPARTMENT OF TRANSPORTATION
INTERMODAL TRANSPORTATION DIVISION
BRIDGE GROUP

STA 286+
SALT RIVER BRIDGE EB & WB WDNG
FOUNDATION PLAN EB 6

I-10 / SR 51 - SR 101L

202-A-NFA

PRELIMINARY
95%
Review
NOT FOR CONSTRUCTION OR RECORDING

DWG. S-21 .37 OF 133

___ OF ___

DESIGN FILE: P:\SR 202 Design Build\CADD\Plans\Structures\TY Lin Bridges\221679.00 202 Design Build\CADD\2268 Salt River EB\100X\37_S2268.FP6.dgn
DATE: 2/23/2009 TIME: 11:49:43 AM

F.H.W.A. REGION	STATE	PROJECT NO.	SHEET NO.	TOTAL SHEETS	AS BUILT
9	ARIZ.	202-A-NFA			
		202L MA 0			

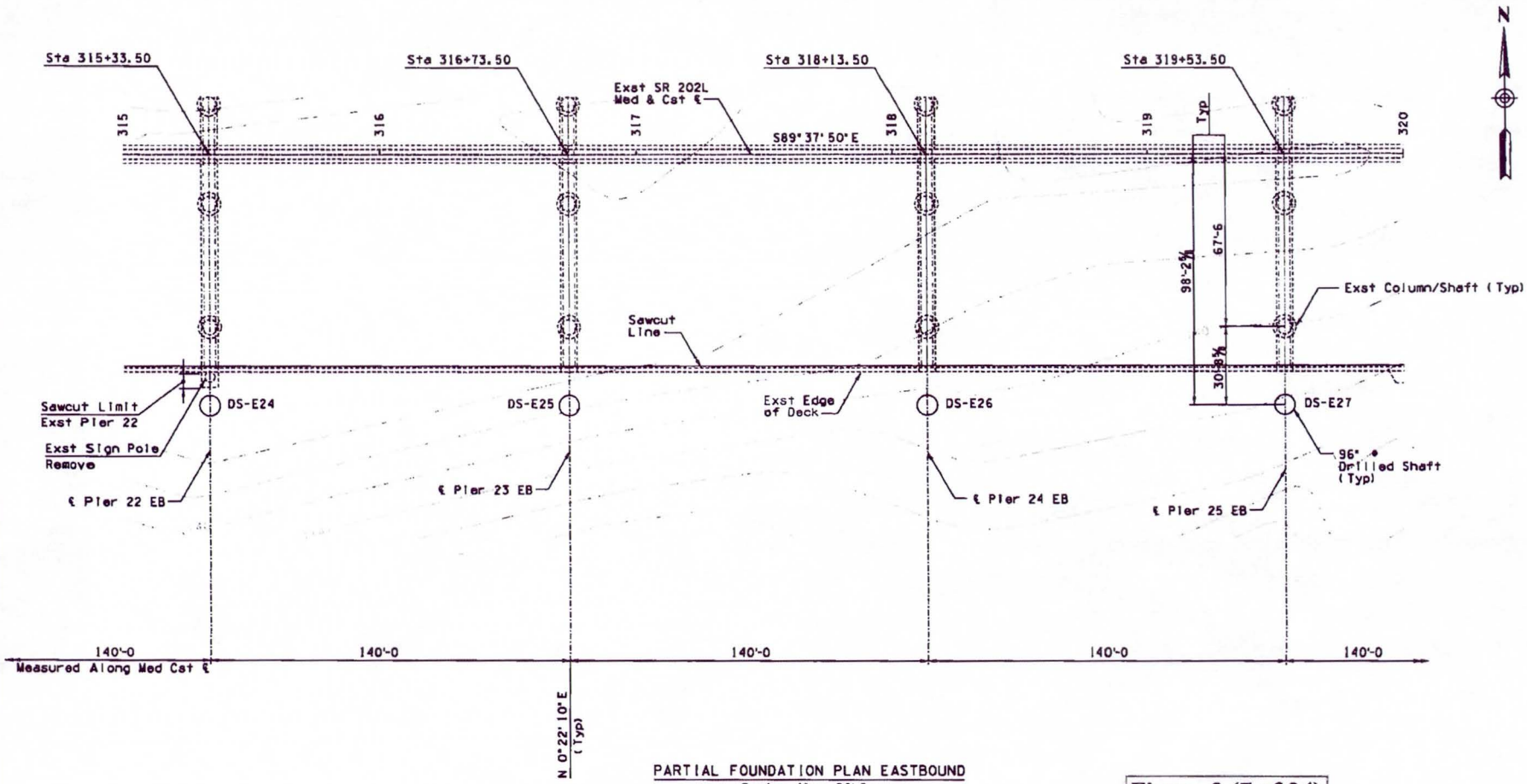

PARTIAL FOUNDATION PLAN EASTBOUND

Scale: 1" = 20'-0

Figure 2 (7 of 24)

REV	DATE	DESCRIPTION	BY
0	/ /		
	/ /		
	/ /		
	/ /		
	/ /		
	/ /		
	/ /		
	/ /		
	/ /		
	/ /		

	NAME	DATE
DESIGN	JPP	11/08
DRAWN	CMC	11/08
CHECKED	DMH	11/08

TAYLOR INTERNATIONAL
Civil and Structural Engineers

ROUTE	MILEPOST	STRUCTURE NO.
202L	8.17	2268/2269

ARIZONA DEPARTMENT OF TRANSPORTATION
INTERMODAL TRANSPORTATION DIVISION
BRIDGE GROUP

STA 286+
SALT RIVER BRIDGE EB & WB WDNG
FOUNDATION PLAN EB 7
I-10 / SR 51 - SR 101L

TRACS NO. H6871 01 C | 202-A-NFA

PRELIMINARY
95%
Review
NOT FOR CONSTRUCTION OR RECORDING

DWG. S-21 .38 OF 133

___ OF ___

DESIGN FILE: P:\SR 202 Design Build\CADD\Plans\Structures\TY Lin Bridges\221679.00 202 Design Build\CADD\2268 Salt River EB\100%\38_S2268_FP7.dgn
DATE: 2/23/2009 TIME: 11:49:55 AM

FEDERAL REGION	STATE	PROJECT NO.	SHEET NO.	TOTAL SHEETS	AS BUILT
9	ARIZ.	202-A-NFA			
		202L MA 0			

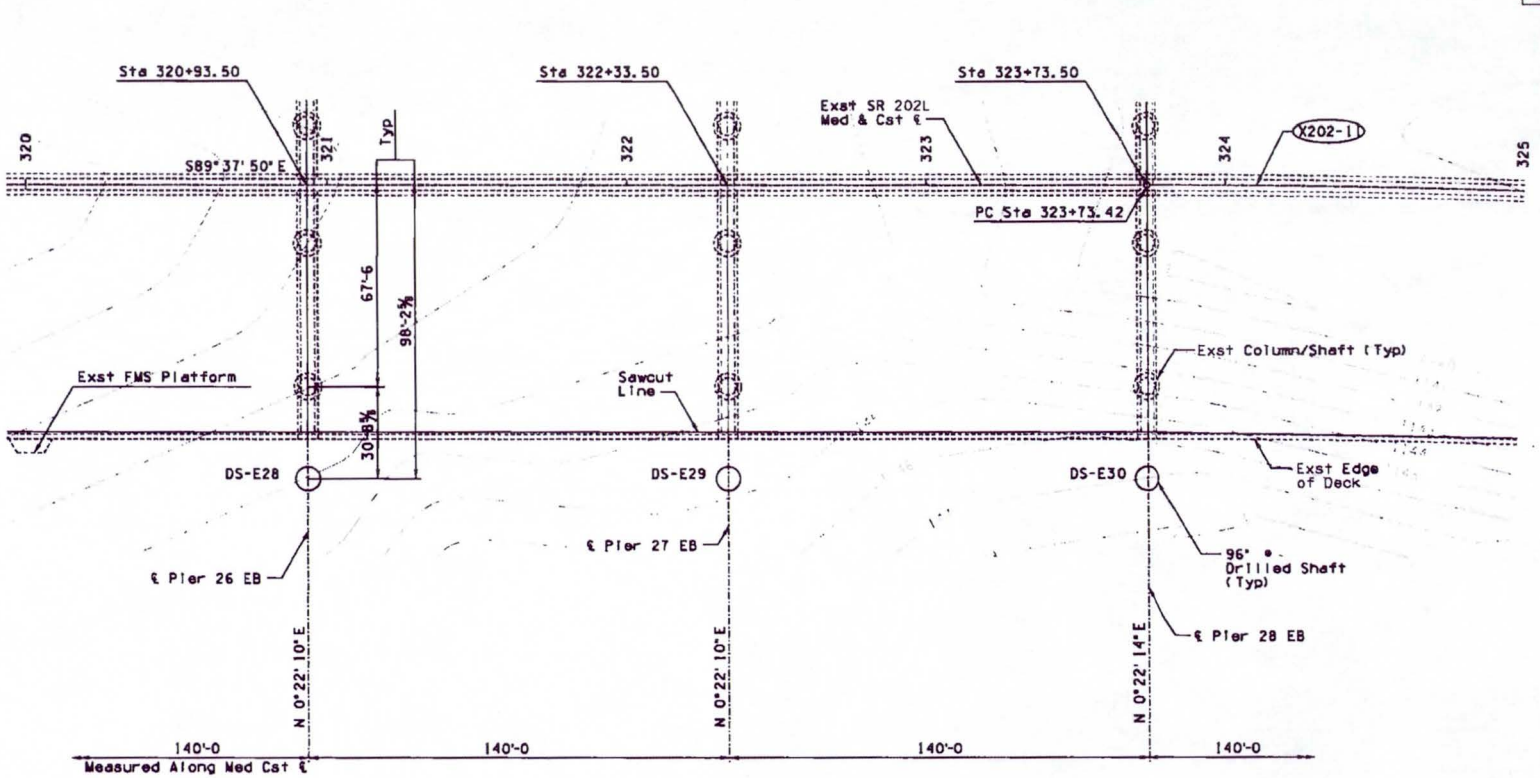

PARTIAL FOUNDATION PLAN EASTBOUND
Scale: 1" = 20'-0

Figure 2 (8 of 24)

REV	DATE	DESCRIPTION	BY
0	/ /		
	/ /		
	/ /		
	/ /		
	/ /		
	/ /		
	/ /		
	/ /		
	/ /		

	NAME	DATE
DESIGN	JRP	11/08
DRAWN	DMC	11/08
CHECKED	DMM	11/08

TYLIN INTERNATIONAL
Civil and Structural Engineers

ARIZONA DEPARTMENT OF TRANSPORTATION
INTERMODAL TRANSPORTATION DIVISION
BRIDGE GROUP

STA 286+
SALT RIVER BRIDGE EB & WB WDNG
FOUNDATION PLAN EB 8

I-10 / SR 51 - SR 101L

ROUTE	MILEPOST	STRUCTURE NO.
202L	8.17	2268/2269

TRACS NO. H6871 01 C

202-A-NFA

PRELIMINARY
95%
Review
NOT FOR CONSTRUCTION OR RECORDING

DWG. S-21 , 39 OF 133

___ OF ___

DESIGN FILE: P:\SR 202 Design Build\CADD\Plans\Structures\TY Lin Bridges\221679.00 202 Design Build\CADD\2268 Salt River EB\180X\39_S2268_FPB.dgn
DATE: 2/23/2009 TIME: 11:58:07 AM

F.H.W.A. REGION	STATE	PROJECT NO.	SHEET NO.	TOTAL SHEETS	AS BUILT
9	ARIZ.	202-A-NFA			
		202L MA 0			

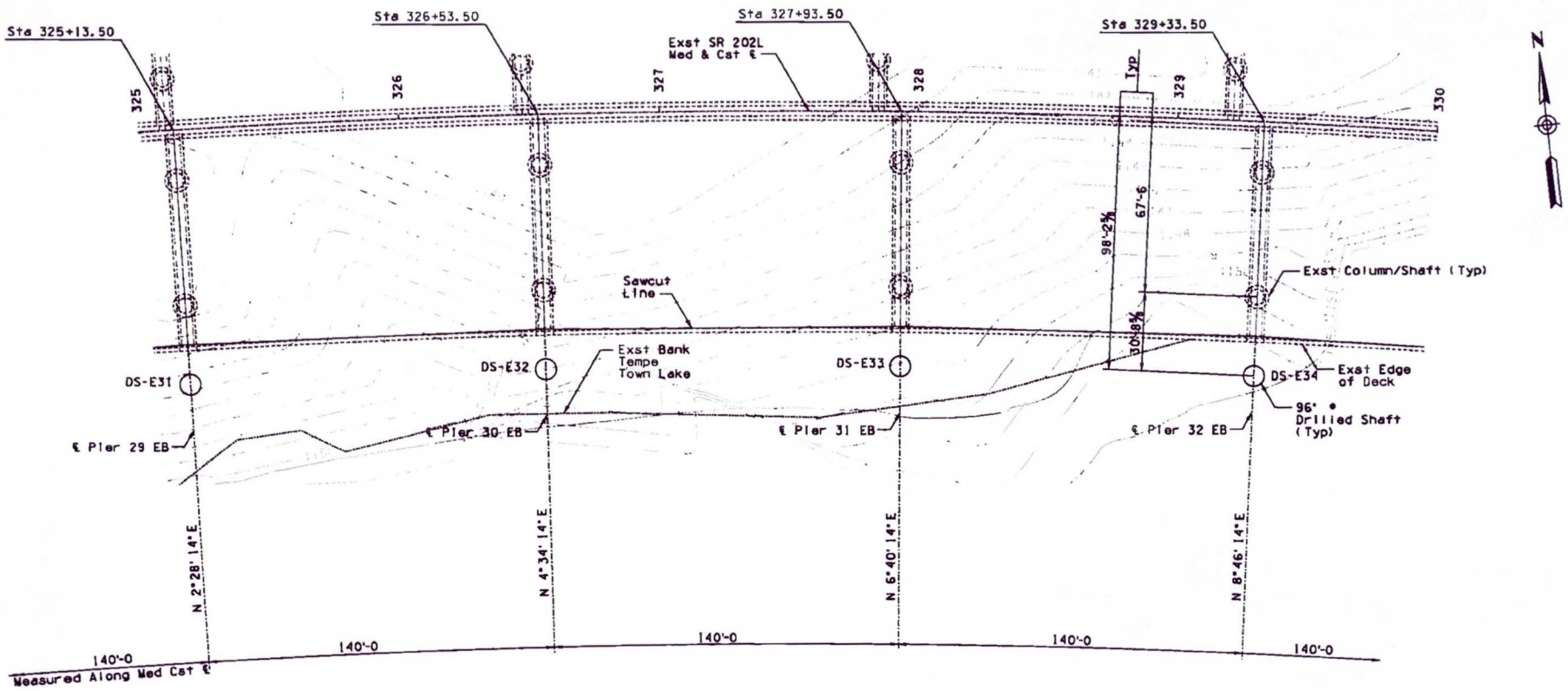

PARTIAL FOUNDATION PLAN EASTBOUND
Scale: 1" = 20'-0

Figure 2 (9 of 24)

REV	DATE	DESCRIPTION	BY
0	/ /		
	/ /		
	/ /		
	/ /		
	/ /		
	/ /		
	/ /		
	/ /		

	NAME	DATE
DESIGN	JPP	11/08
DRAWN	CMC	11/08
CHECKED	DHH	11/08

PALIN INTERNATIONAL
Civil and Structural Engineers

ROUTE	MILEPOST	STRUCTURE NO.
202L	8.17	2268/2269

ARIZONA DEPARTMENT OF TRANSPORTATION
INTERMODAL TRANSPORTATION DIVISION
BRIDGE GROUP

STA 286+
SALT RIVER BRIDGE EB & WB WDNG
FOUNDATION PLAN EB 9

I-10 / SR 51 - SR 101L

TRACS NO. H6871 01 C | 202-A-NFA

PRELIMINARY
95%
Review
NOT FOR CONSTRUCTION OR RECORDING

DWG. S-21 ,40 OF 133

___ OF ___

DESIGN FILE: P:\SR 202 Design Build\CADD\Plans\Structures\TY Lin Bridges\221679.00 202 Design Build\CADD\2268 Salt River EB\100X\40_S2268_FP9.dgn
DATE: 2/23/2009 TIME: 11:50:23 AM

FAHWA REGION	STATE	PROJECT NO.	SHEET NO.	TOTAL SHEETS	AS BUILT
9	ARIZ.	202-A-NFA			
		202L MA 0			

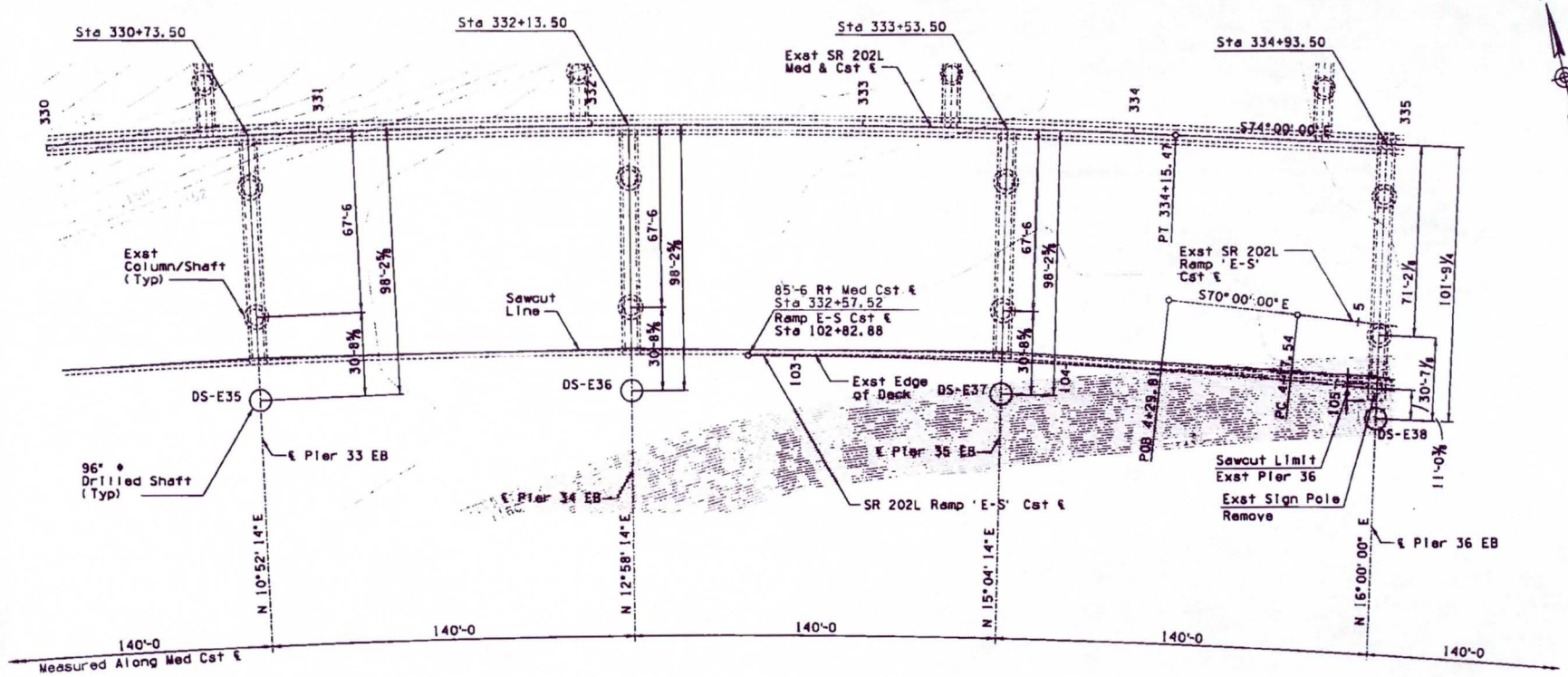

PARTIAL FOUNDATION PLAN EASTBOUND
Scale: 1" = 20'-0

Figure 2 (10 of 24)

REV	DATE	DESCRIPTION	BY
0	/ /		

	NAME	DATE
DESIGN	JRP	11/08
DRAWN	DMC	11/08
CHECKED	DNH	11/08

TYLIN INTERNATIONAL
Civil and Structural Engineers

ARIZONA DEPARTMENT OF TRANSPORTATION
INTERMODAL TRANSPORTATION DIVISION
BRIDGE GROUP

STA 286+
SALT RIVER BRIDGE EB & WB WDNG
FOUNDATION PLAN EB 10

I-10 / SR 51 - SR 101L

ROUTE	HIGHWAY	STRUCTURE NO.
202L	8.17	2268/2269

TRACS NO. H6871 01 C | 202-A-NFA

PRELIMINARY
95%
Review
NOT FOR CONSTRUCTION OR RECORDING

DWG. S-21 .41 OF 133
___ OF ___

DESIGN FILE: P:\SR 202 Design Build\CADD\Plans\Structures\TY Lin Bridges\221679.00 202 Design Build\CADD\2268 Salt River EB\100%\41_S2268_FP10.dgn
DATE: 2/23/2009 TIME: 11:50:35 AM

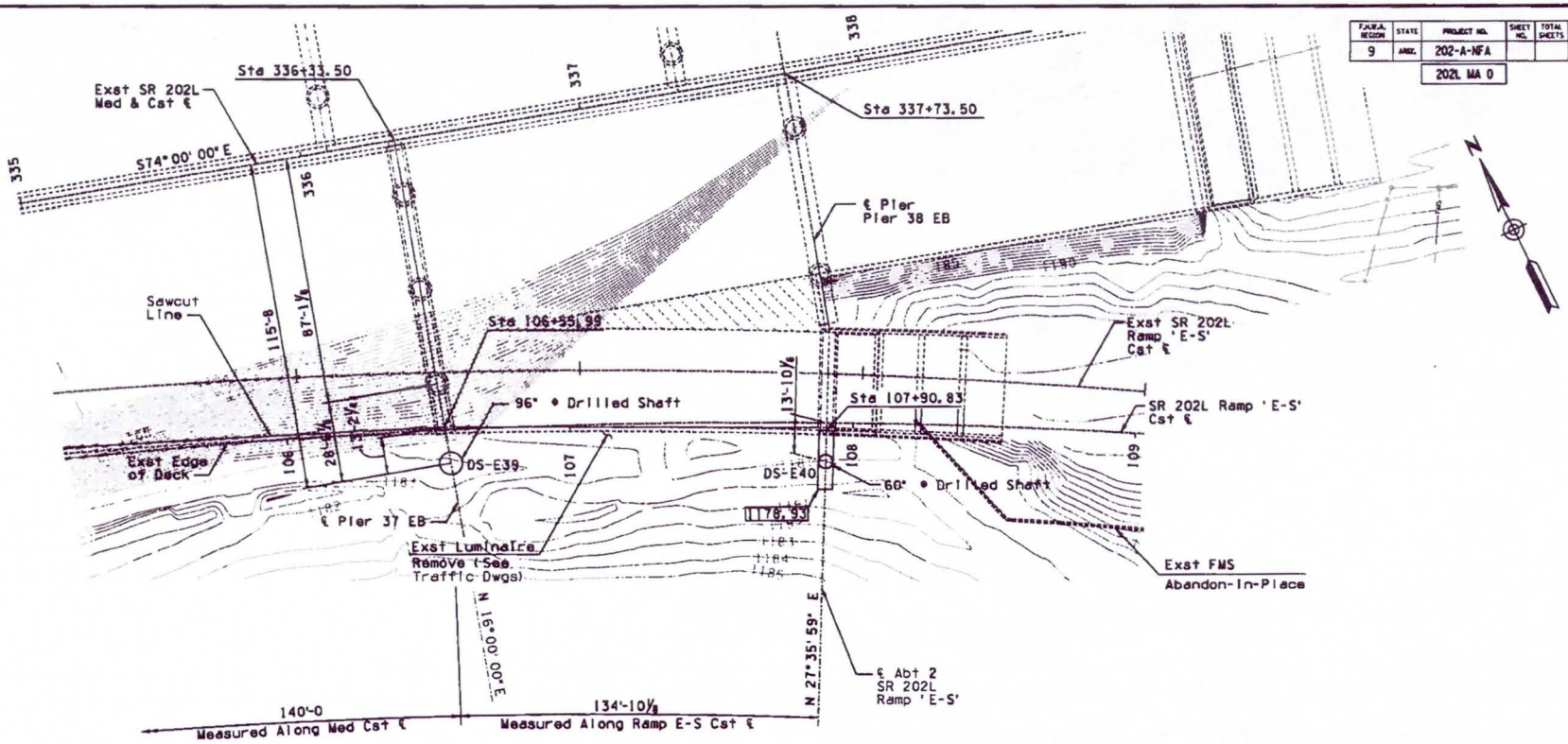

F.H.W.A. REGION	STATE	PROJECT NO.	SHEET NO.	TOTAL SHEETS	AS BUILT
9	ARIZ.	202-A-NFA			

202L MA 0

PARTIAL FOUNDATION PLAN EASTBOUND

Scale: 1" = 20'-0

Figure 2 (11 of 24)

REV	DATE	DESCRIPTION	BY
0	/ /		
	/ /		
	/ /		
	/ /		
	/ /		
	/ /		
	/ /		
	/ /		
	/ /		

	NAME	DATE
DESIGN	JPP	11/08
DRAWN	CMC	11/08
CHECKED	DMH	11/08

TYLIN INTERNATIONAL
Civil and Structural Engineers

DATE	MILEPOST	STRUCTURE NO.
202L	8.17	2268/2269

TRACS NO. H6871 01 C

ARIZONA DEPARTMENT OF TRANSPORTATION
INTERMODAL TRANSPORTATION DIVISION
BRIDGE GROUP

STA 286+
SALT RIVER BRIDGE EB & WB WDNG
FOUNDATION PLAN EB II

I-10 / SR 51 - SR 101L

202-A-NFA

PRELIMINARY
95%
Reviewer
NOT FOR CONSTRUCTION OR RECORDING

DWG. S-21 , 42 OF 133

___ OF ___

DESIGN FILE: P:\SR 202 Design Build\CADD\Plans\Structures\TY Lin Bridges\221679.00 202 Design Build\CADD\2268 Salt River EB\100Z\42.S2268_FP11.dgn
DATE: 2/23/2009 TIME: 11:50:49 AM

F.H.W.A. REGION	STATE	PROJECT NO.	SHEET NO.	TOTAL SHEETS	AS BUILT
9	ARIZ.	202-A-NFA			

202L MA 0

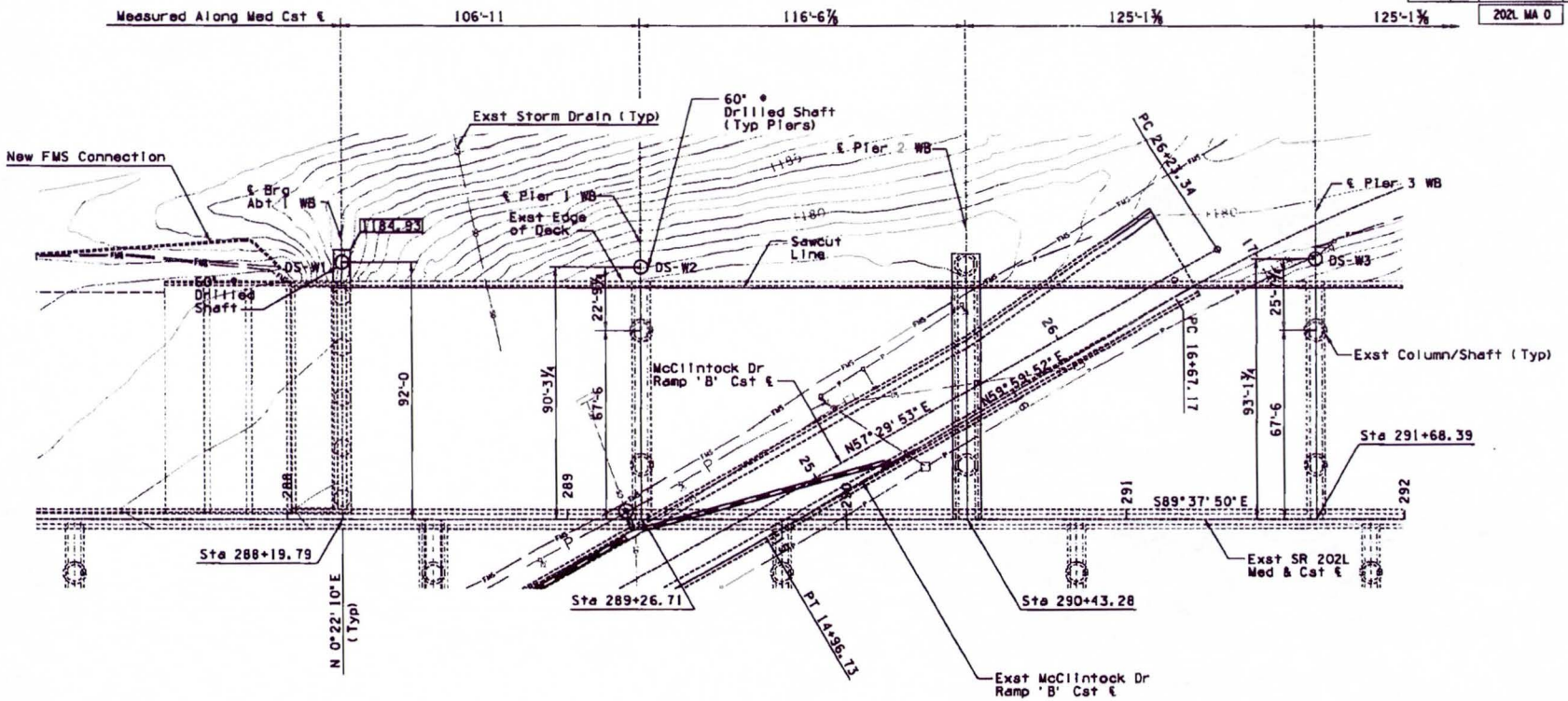

NOTES:

XXXX.XX Denotes Bottom Elevation of Footing Cap

Final Foundation Design Report by DMJM Harris dated November 2007.

Refer to Geotechnical Technical Memorandum No. 4 Bridge Foundation Recommendations by HDR dated February 13, 2009 for further foundation/geotechnical data.

Exst electrical conduit located in exterior bridge barrier to be removed and relocated.

Exst FWS hung between exst exterior girders to remain. Protect in place.

PARTIAL FOUNDATION PLAN WESTBOUND

Scale: 1" = 20'-0

Figure 2 (12 of 24)

REV	DATE	DESCRIPTION	BY
0	/ /		
	/ /		
	/ /		
	/ /		
	/ /		
	/ /		
	/ /		
	/ /		
	/ /		

	NAME	DATE
DESIGN	JRP	11/08
DRAWN	CMC	11/08
CHECKED	KLH	11/08

TYLIN INTERNATIONAL
Civil and Structural Engineers

ROUTE	MILEPOST	STRUCTURE NO.
202L	8.17	2268/2269

TRACS NO. H6871 01 C

ARIZONA DEPARTMENT OF TRANSPORTATION
INTERMODAL TRANSPORTATION DIVISION
BRIDGE GROUP
STA 286+
SALT RIVER BRIDGE EB & WB WDNG
FOUNDATION PLAN WB 1
I-10 / SR 51 - SR 101L

202-A-NFA

PRELIMINARY 95% Review
NOT FOR CONSTRUCTION OR RECORDING

DWG. S-21 .43 OF 133

___ OF ___

DESIGN FILE: P:\SR 202 Design Build\CADD\Plans\Structures\TY Lin Bridges\221679.88 202 Design Build\CADD\2269 Salt River WB\100X\43_S2269_FL12.dgn
DATE: 2/23/2009 TIME: 11:51:48 AM

F.A.H.A. REGION	STATE	PROJECT NO.	SHEET NO.	TOTAL SHEETS	AS BUILT
9	ARIZ.	202-A-NFA			
		202L MA 0			

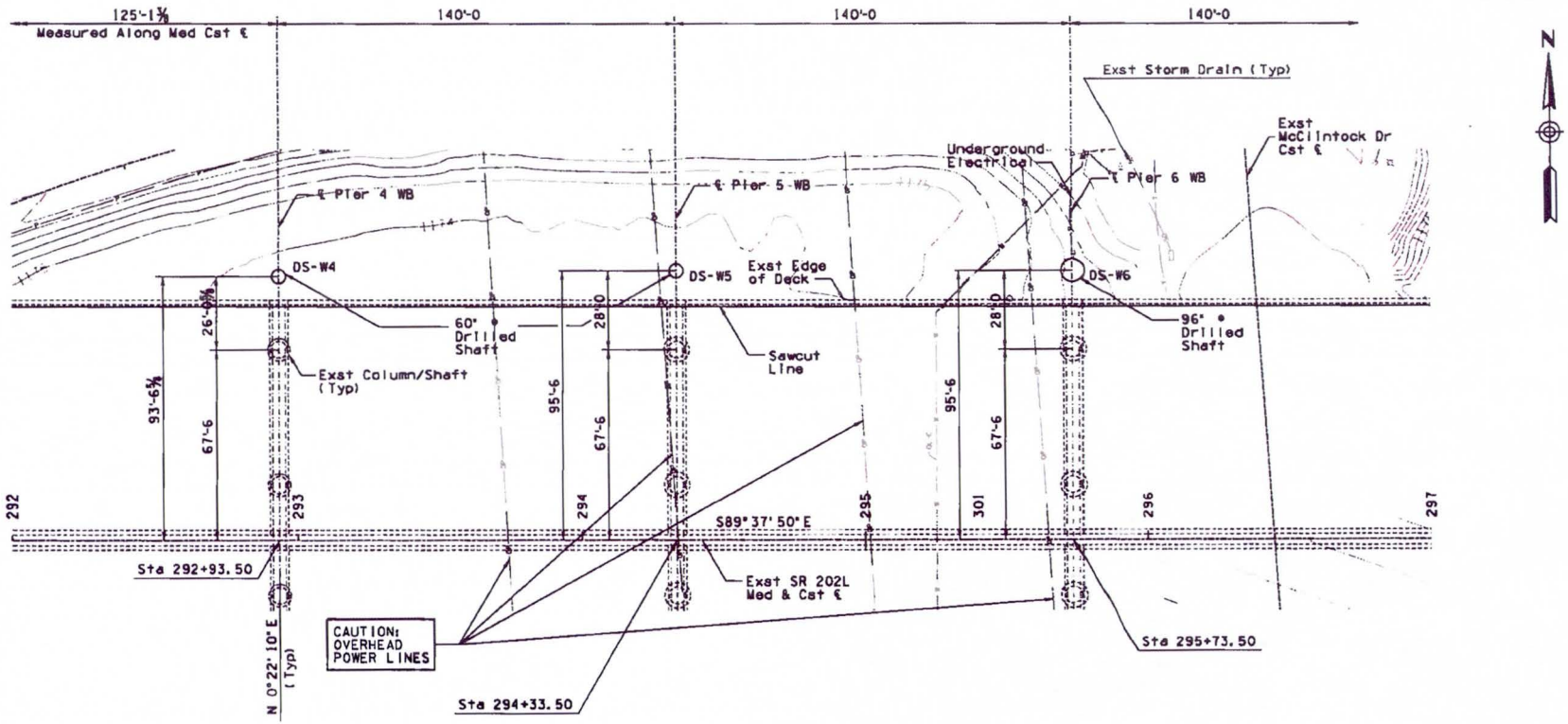

PARTIAL FOUNDATION PLAN WESTBOUND

Scale: 1" = 20'-0

Figure 2 (13 of 24)

REV	DATE	DESCRIPTION	BY
0	/ /		
	/ /		
	/ /		
	/ /		
	/ /		
	/ /		
	/ /		
	/ /		
	/ /		

	NAME	DATE
DESIGN	JRP	11/08
DRAWN	CMC	11/08
CHECKED	KLH	11/08

TYLIN INTERNATIONAL
Civil and Structural Engineers

ROUTE	MILEPOST	STRUCTURE NO.
202L	8.17	2268/2269

TRACS NO. H6871 01 C

ARIZONA DEPARTMENT OF TRANSPORTATION
INTERMODAL TRANSPORTATION DIVISION
BRIDGE GROUP

STA 286+
SALT RIVER BRIDGE EB & WB WDNG
FOUNDATION PLAN WB 2

I-10 / SR 51 - SR 101L

202-A-NFA

PRELIMINARY
95%
Review
NOT FOR CONSTRUCTION OR RECORDING

DWG. S-21 .44 OF 133

___ OF ___

DESIGN FILE: P:\SR 202 Design Build\CADD\Plans\Structures\TY Lin Bridges\221679.00 202 Design Build\CADD\2269 Salt River WB\100%\44_S2269_FL13.dgn
DATE: 2/23/2009 TIME: 11:52:04 AM

FEDERAL REGION	STATE	PROJECT NO.	SHEET NO.	TOTAL SHEETS	AS BUILT
9	ARIZ.	202-A-NFA			
		202L MA 0			

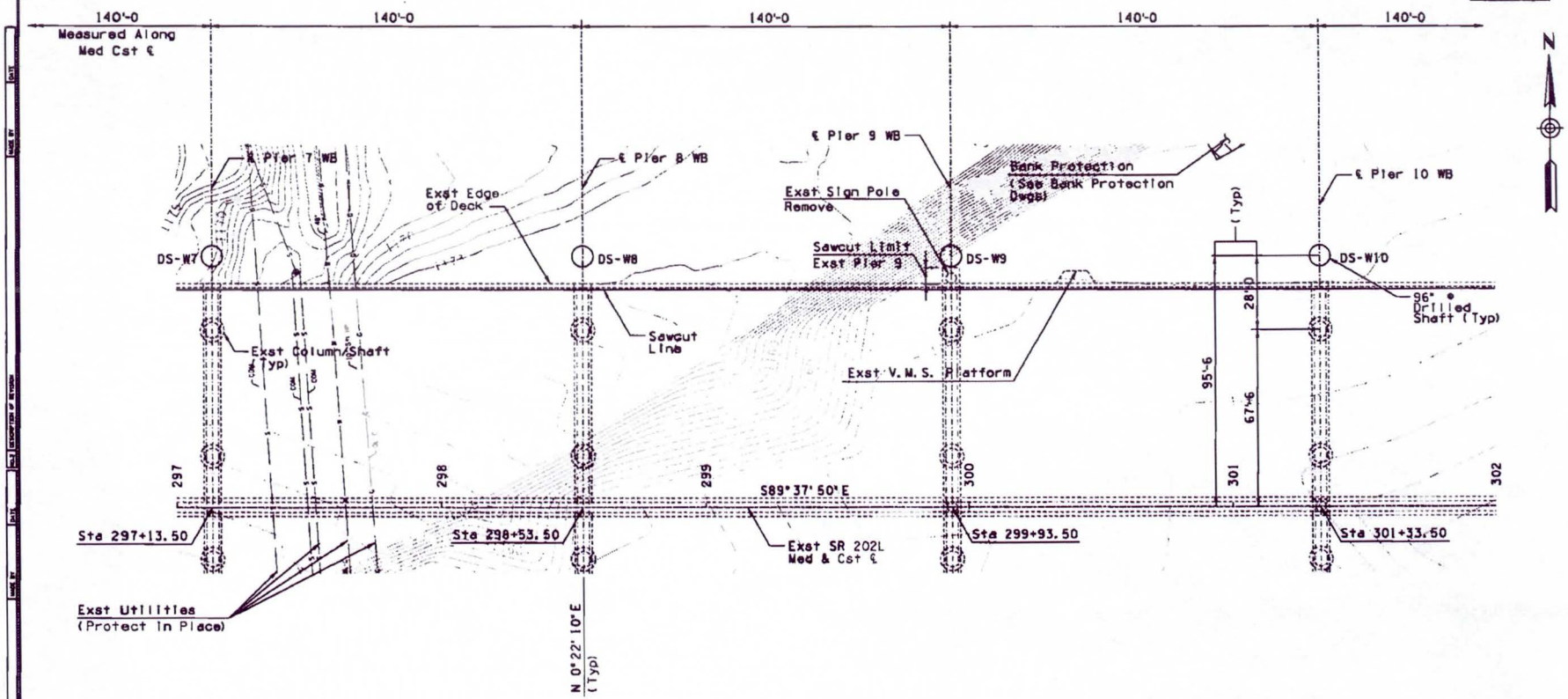

PARTIAL FOUNDATION PLAN WESTBOUND
Scale: 1" = 20'-0

Figure 2 (14 of 24)

REV	DATE	DESCRIPTION	BY
0	/ /		
	/ /		
	/ /		
	/ /		
	/ /		
	/ /		
	/ /		
	/ /		
	/ /		

	NAME	DATE
DESIGN	JRP	11/08
DRAWN	DMC	11/08
CHECKED	KLH	11/08

TYLIN INTERNATIONAL
Civil and Structural Engineers

ROUTE	MILEPOST	STRUCTURE NO.
202L	8.17	2268/2269

TRACS NO. H6871 01 C

ARIZONA DEPARTMENT OF TRANSPORTATION
INTERMODAL TRANSPORTATION DIVISION
BRIDGE GROUP

STA 286+
SALT RIVER BRIDGE EB & WB WDNG
FOUNDATION PLAN WB 3

I-10 / SR 51 - SR 101L

202-A-NFA

PRELIMINARY
95%
Review
NOT FOR CONSTRUCTION OR RECORDING

DWG. S-21 .45 OF 133
___ OF ___

DESIGN FILE: P:\SR 202 Design Build\CADD\Plans\Structures\TY Lin Bridges\221679.00 202 Design Build\CADD\2269 Salt River WB\100%\45_S2269_FL14.dgn
DATE: 2/23/2009 TIME: 11:52:15 AM

FHWA REGION	STATE	PROJECT NO.	SHEET NO.	TOTAL SHEETS	AS BUILT
9	ARIZ.	202-A-NFA			
		202L MA 0			

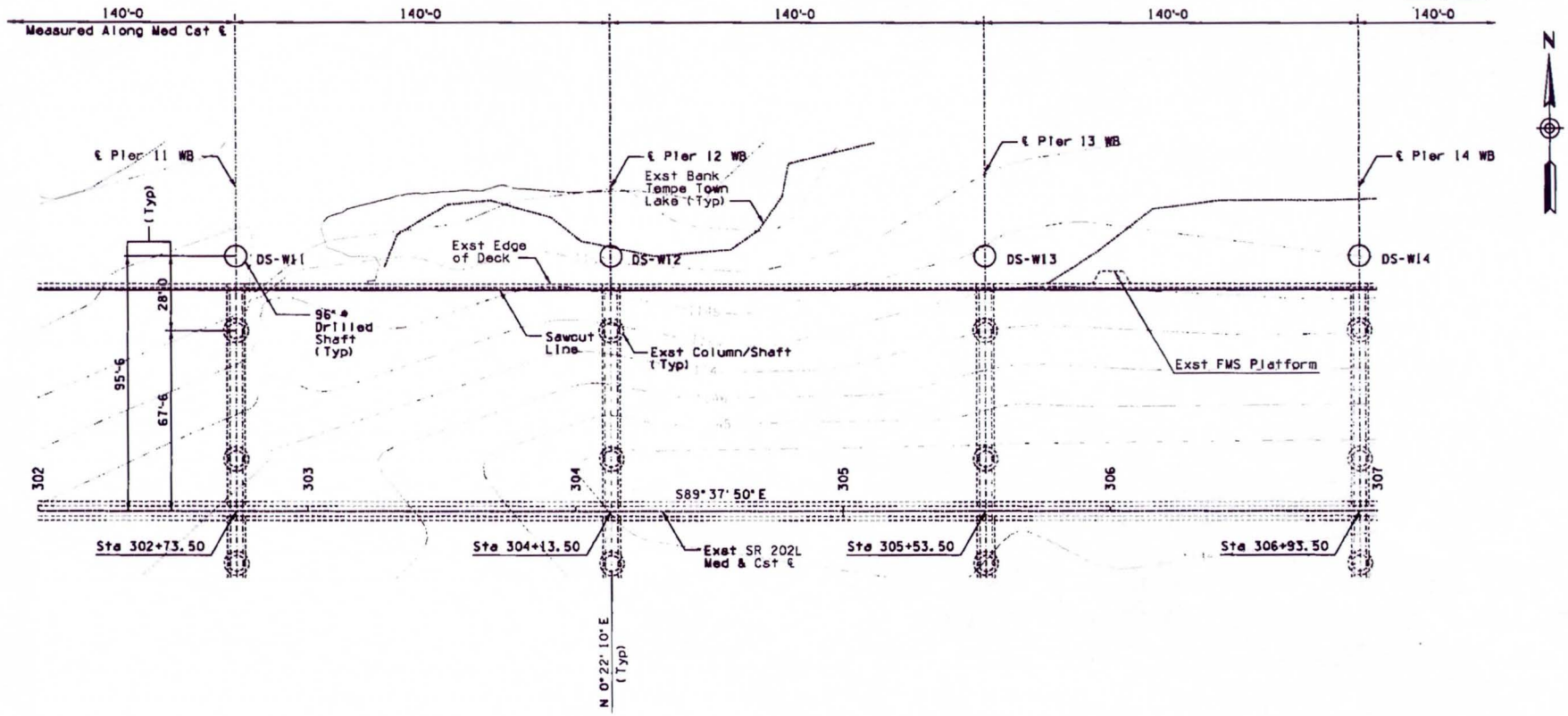

PARTIAL FOUNDATION PLAN WESTBOUND

Scale: 1" = 20'-0

Figure 2 (15 of 24)

REV	DATE	DESCRIPTION	BY
0	/ /		
	/ /		
	/ /		
	/ /		
	/ /		
	/ /		
	/ /		
	/ /		
	/ /		

	NAME	DATE
DESIGN	JPP	11/08
DRAWN	DMC	11/08
CHECKED	ELM	11/08

TY-LIN INTERNATIONAL
Civil and Structural Engineers

ROUTE	MILEPOST	STRUCTURE NO.
202L	8.17	2268/2269

TRACS NO. H6871 01 C

ARIZONA DEPARTMENT OF TRANSPORTATION
INTERMODAL TRANSPORTATION DIVISION
BRIDGE GROUP

STA 286+
SALT RIVER BRIDGE EB & WB WDNG
FOUNDATION PLAN WB 4

I-10 / SR 51 - SR 101L

202-A-NFA

PRELIMINARY
95%
Review
NOT FOR CONSTRUCTION OR RECORDING

DWG. S-21 , 46 OF 133

___ OF ___

DESIGN FILE: P:\SR 202 Design Build\CADD\Plans\Structures\TY Lin Bridges\221679.00 202 Design Build\CADD\2269 Salt River WB\100%\46_S2269_FL15.dgn
DATE: 2/23/2009 TIME: 11:52:25 AM

FJHWA REGION	STATE	PROJECT NO.	SHEET NO.	TOTAL SHEETS	AS BUILT
9	ARIZ.	202-A-NFA			
		202L MA 0			

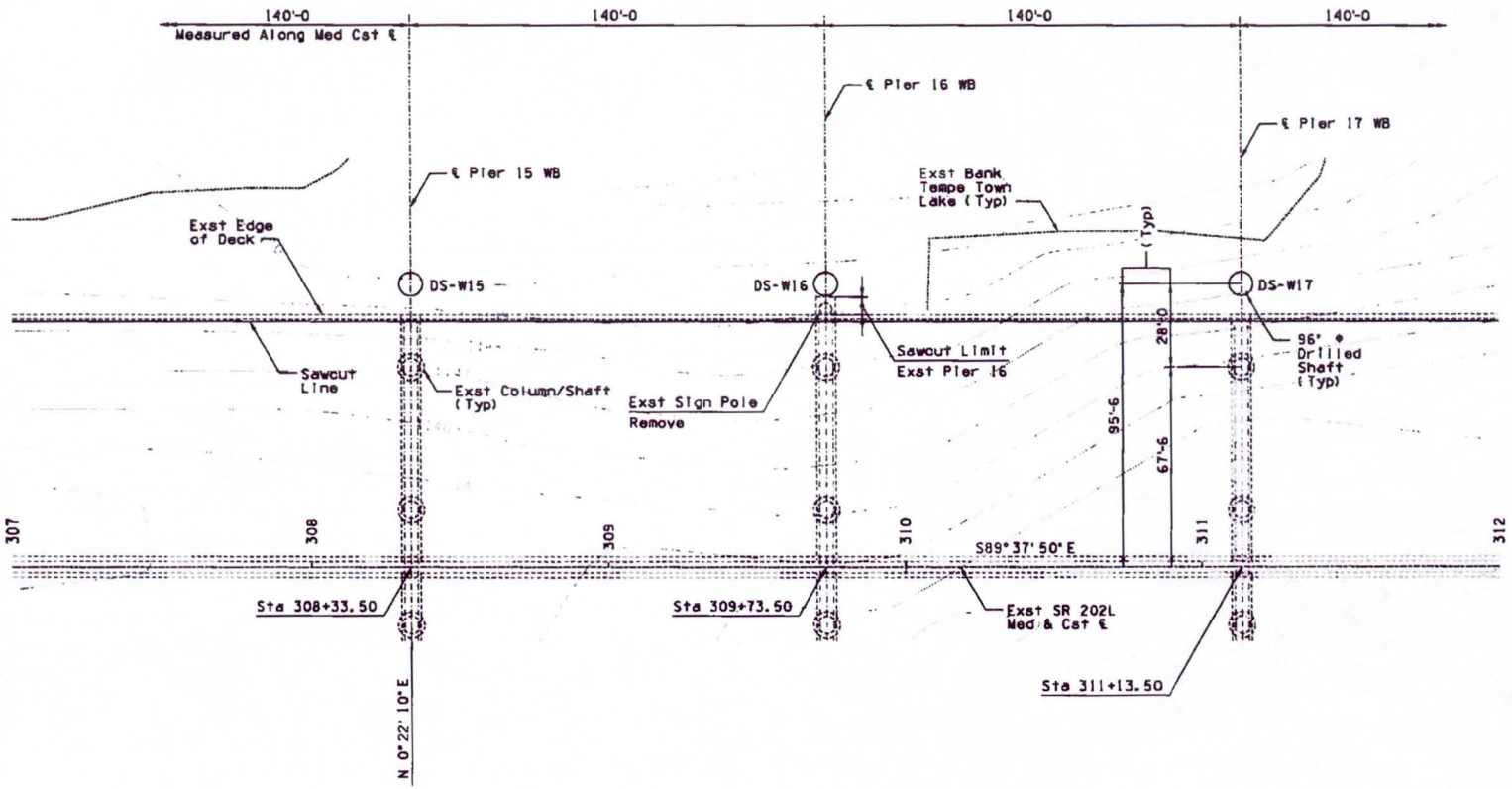

PARTIAL FOUNDATION PLAN WESTBOUND

Scale: 1" = 20'-0

Figure 2 (16 of 24)

REV	DATE	DESCRIPTION	BY
0	/ /		
	/ /		
	/ /		
	/ /		
	/ /		
	/ /		
	/ /		
	/ /		
	/ /		

	NAME	DATE
DESIGN	JRP	11/08
DRAWN	CMC	11/08
CHECKED	KLH	11/08

TYLIN INTERNATIONAL
Civil and Structural Engineers

ROUTE	MILEPOST	STRUCTURE NO.
202L	8.17	2268/2269

TRACS NO. H6871 01 C

ARIZONA DEPARTMENT OF TRANSPORTATION
INTERMODAL TRANSPORTATION DIVISION
BRIDGE GROUP

STA 286+
SALT RIVER BRIDGE EB & WB WDNG
FOUNDATION PLAN WB 5

I-10 / SR 51 - SR 101L

202-A-NFA

PRELIMINARY
95%
Review
NOT FOR CONSTRUCTION OR RECORDING

DWG. S-21 , 47 OF 133

___ OF ___

DESIGN FILE: P:\SR 202 Design Build\CADD\Plans\Structures\TY Lin Bridges\221679.00 202 Design Build\CADD\2269 Salt River WB\100%\47_S2269_FL16.dgn
DATE: 2/23/2009 TIME: 11:52:36 AM

FAHWA REGION	STATE	PROJECT NO.	SHEET NO.	TOTAL SHEETS	AS BUILT
9	ARIZ.	202-A-NFA			
		202L MA 0			

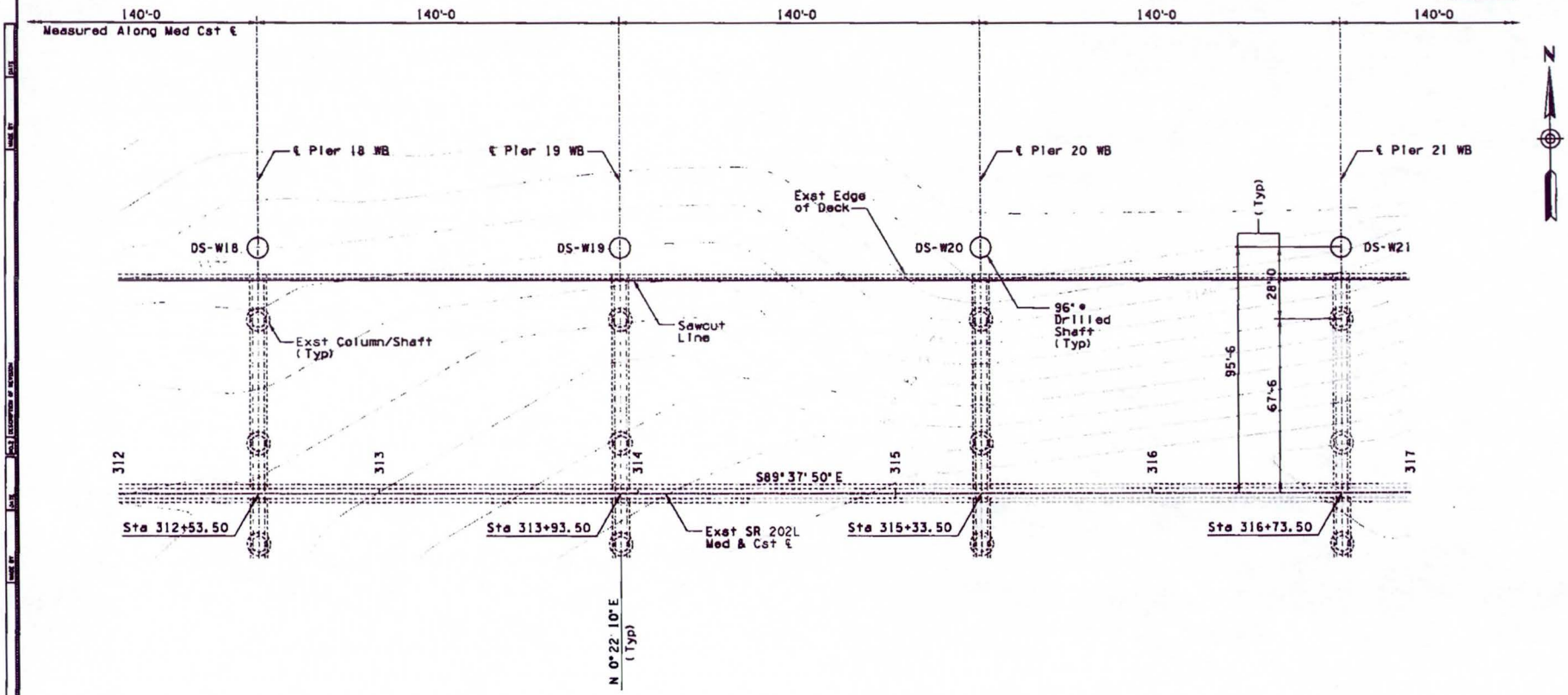

PARTIAL FOUNDATION PLAN WESTBOUND

Scale: 1" = 20'-0

Figure 2 (17 of 24)

REV	DATE	DESCRIPTION	BY
1	/ /		
	/ /		
	/ /		
	/ /		
	/ /		
	/ /		
	/ /		
	/ /		
	/ /		

	NAME	DATE
DESIGN	JRP	11/08
DRAWN	DMC	11/08
CHECKED	KLH	11/08

TYLIN INTERNATIONAL
Civil and Structural Engineers

ROUTE	MILEPOST	ENGINEERING NO.
202L	8.17	2268/2269

TRACS NO. H6871 01 C

ARIZONA DEPARTMENT OF TRANSPORTATION
INTERMODAL TRANSPORTATION DIVISION
BRIDGE GROUP

STA 286+
SALT RIVER BRIDGE EB & WB WDNG
FOUNDATION PLAN WB 6

I-10 / SR 51 - SR 101L

202-A-NFA

PRELIMINARY
95%
Review
NOT FOR CONSTRUCTION OR RECORDING

DWG. S-21 ,48 OF 133

___ OF ___

DESIGN FILE: P:\SR 202 Design Build\CADD\Plans\Structures\TY Lin Bridges\221679.88 202 Design Build\CADD\2269 Salt River WB\100%\48_S2269_FL17.dgn
DATE: 2/23/2009 TIME: 11:52:47 AM

F.H.W.A. REGION	STATE	PROJECT NO.	SHEET NO.	TOTAL SHEETS	AS BUILT
9	ARIZ.	202-A-NFA			
		202L MA D			

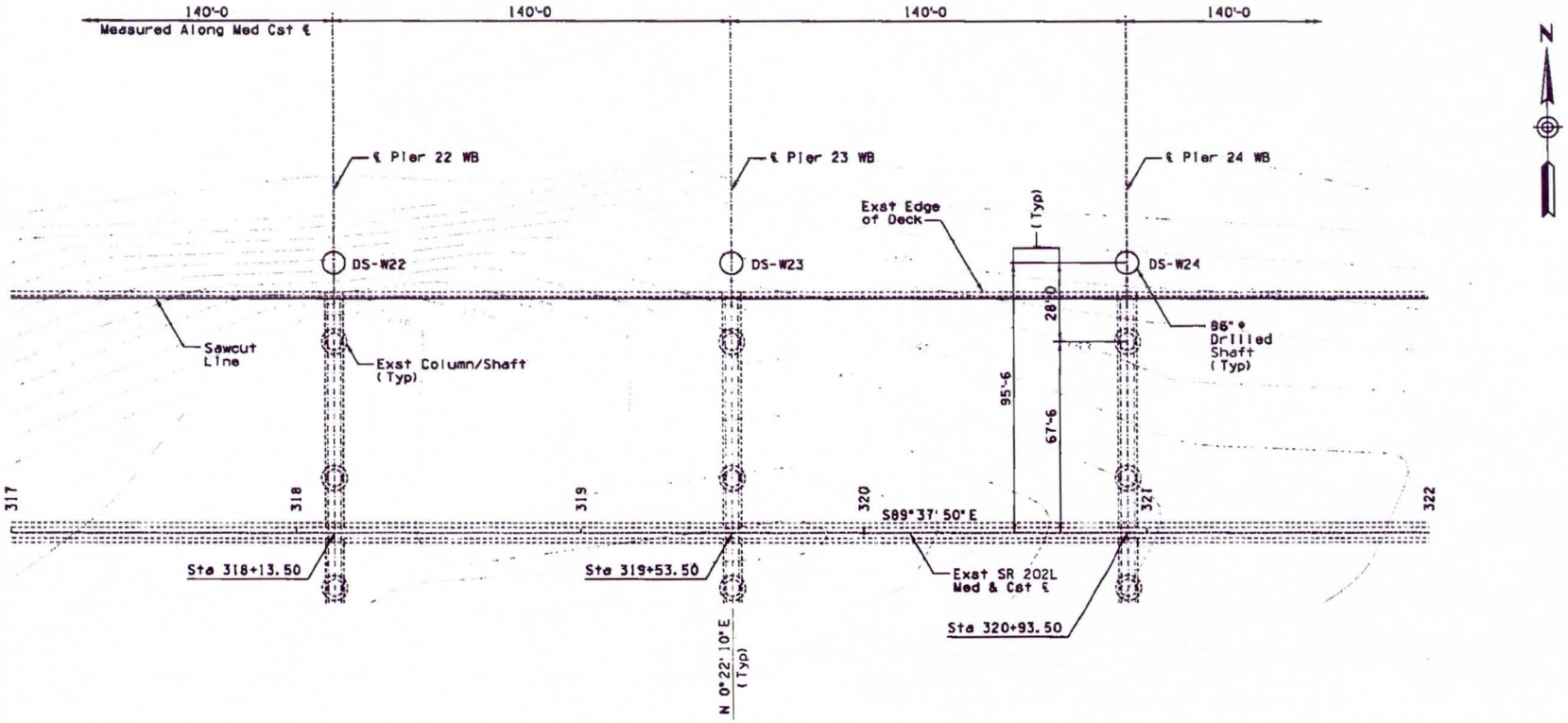

PARTIAL FOUNDATION PLAN WESTBOUND

Scale: 1" = 20'-0

Figure 2 (18 of 24)

REV	DATE	DESCRIPTION	BY
0	/ /		
	/ /		
	/ /		
	/ /		
	/ /		
	/ /		
	/ /		
	/ /		
	/ /		
	/ /		

	NAME	DATE
DESIGN	JPP	11/08
DRAWN	CMC	11/08
CHECKED	RLH	11/08

TYLIN INTERNATIONAL
Civil and Structural Engineers

ROUTE	MILEPOST	STRUCTURE NO.
202L	8.17	2268/2269

TRACS NO. H6871 01 C

ARIZONA DEPARTMENT OF TRANSPORTATION
INTERMODAL TRANSPORTATION DIVISION
BRIDGE GROUP

STA 286+
SALT RIVER BRIDGE EB & WB WDNG
FOUNDATION PLAN WB 7

I-10 / SR 51 - SR 101L

202-A-NFA

PRELIMINARY
95%
Review
NOT FOR CONSTRUCTION OR RECORDING

DWG. S-21 , 49 OF 133

___ OF ___

DESIGN FILE: P:\SR 202 Design Build\CADD\Plans\Structures\TY Lin Bridges\221679.00 202 Design Build\CADD\2269 Salt River WB\100%\49_S2269_FL18.dgn
DATE: 2/23/2009 TIME: 11:52:58 AM

F.A.H.W.A. REGION	STATE	PROJECT NO.	SHEET NO.	TOTAL SHEETS	AS BUILT
9	ARIZ.	202-A-NFA			
		202L MA 0			

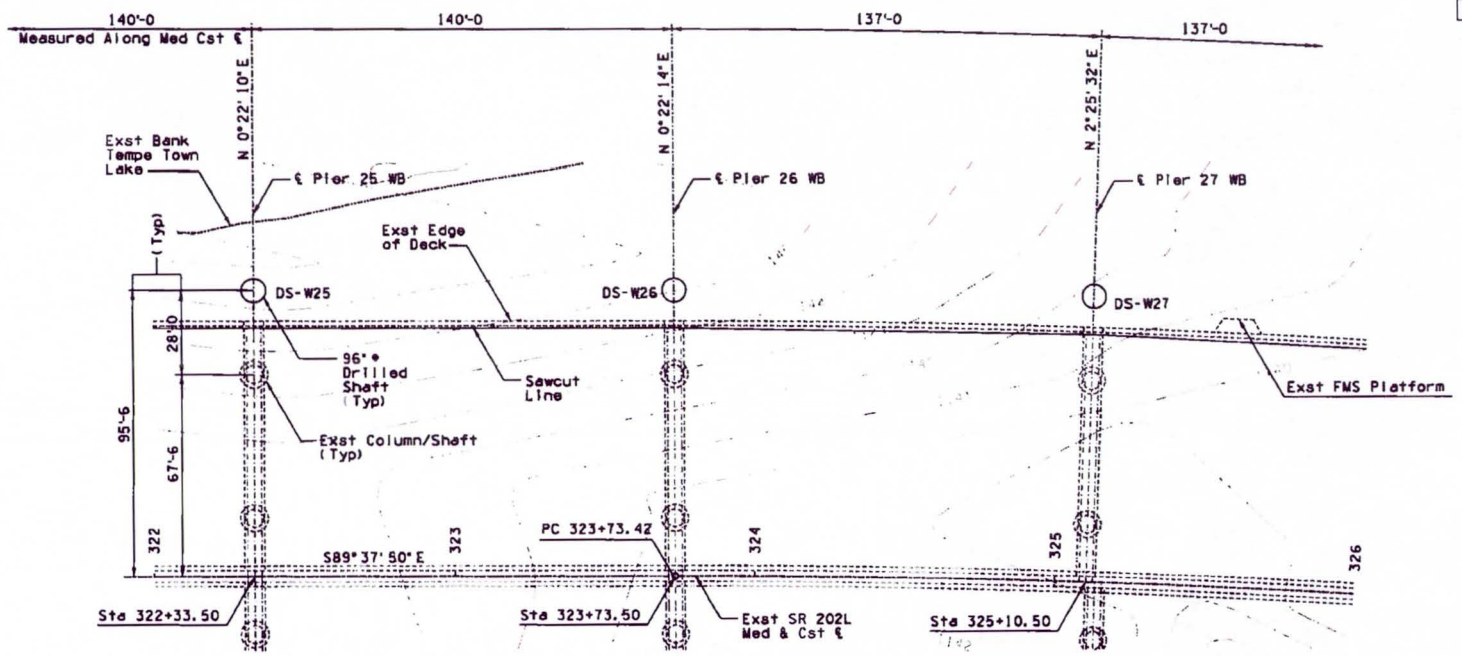

PARTIAL FOUNDATION PLAN WESTBOUND

Scale: 1" = 20'-0

Figure 2 (19 of 24)

REV	DATE	DESCRIPTION	BY
0	/ /		
	/ /		
	/ /		
	/ /		
	/ /		
	/ /		
	/ /		
	/ /		
	/ /		

	NAME	DATE
DESIGN	JRP	11/08
DRAWN	CMC	11/08
CHECKED	KLH	11/08

TALLIN INTERNATIONAL
Civil and Structural Engineers

ROUTE	MILEPOST	STRUCTURE NO.
202L	8.17	2268/2269

TRACS NO. H6871 01 C

ARIZONA DEPARTMENT OF TRANSPORTATION
INTERMODAL TRANSPORTATION DIVISION
BRIDGE GROUP

STA 286+
SALT RIVER BRIDGE EB & WB WDNG
FOUNDATION PLAN WB 8
I-10 / SR 51 - SR 101L

202-A-NFA

PRELIMINARY
95%
Review
NOT FOR CONSTRUCTION OR RECORDING

DWG. S-21 , 50 OF 133

___ OF ___

DESIGN FILE: P:\SR 202 Design Build\CADD\Plans\Structures\TY Lin Bridges\221679.00 202 Design Build\CADD\2269 Salt River WB\100%\50_S2269_FL19.dgn
DATE: 2/23/2009 TIME: 11:53:11 AM

FEDERAL REGION	STATE	PROJECT NO.	SHEET NO.	TOTAL SHEETS	AS BUILT
9	ARIZ.	202-A-NFA			
		202L MA 0			

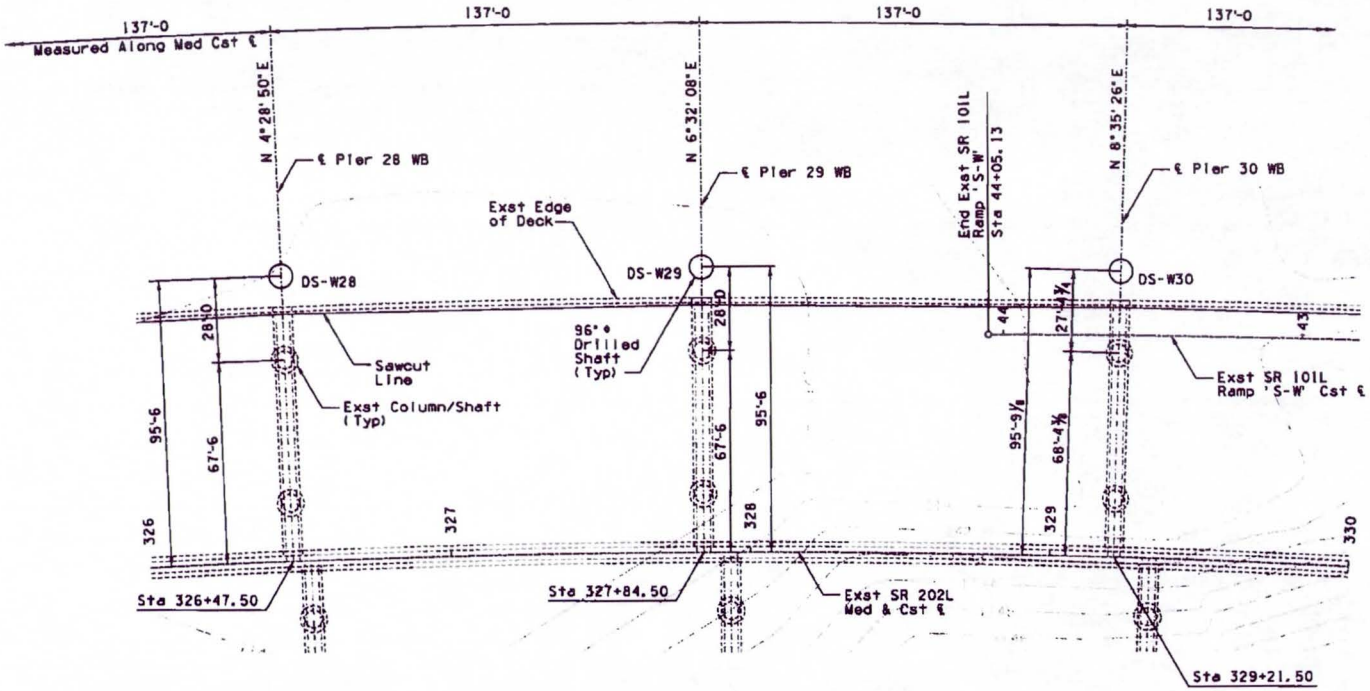

PARTIAL FOUNDATION PLAN WESTBOUND

Scale: 1" = 20'-0

Figure 2 (20 of 24)

REV	DATE	DESCRIPTION	BY
0	/ /		
	/ /		
	/ /		
	/ /		
	/ /		
	/ /		
	/ /		
	/ /		
	/ /		
	/ /		

	NAME	DATE
DESIGN	JRP	11/08
DRAWN	GMC	11/08
CHECKED	KLH	11/08

TYLIN INTERNATIONAL
Civil and Structural Engineers

ROUTE	MILEPOST	STRUCTURE NO.
202L	8.17	2268/2269

TRACS NO. H6871 01 C

ARIZONA DEPARTMENT OF TRANSPORTATION
INTERMODAL TRANSPORTATION DIVISION
BRIDGE GROUP

STA 286+
SALT RIVER BRIDGE EB & WB WDNG
FOUNDATION PLAN WB 9

I-10 / SR 51 - SR 101L

202-A-NFA

PRELIMINARY
95%
Review
NOT FOR CONSTRUCTION OR RECORDING

DWG. S-21 . 51 OF 133

___ OF ___

DESIGN FILE: P:\SR 202 Design Build\CADD\Plans\Structures\TY Lin Bridges\221679.00 202 Design Build\CADD\2269 Salt River WB\100%\51_S2269_FL28.dgn
DATE: 2/23/2009 TIME: 11:53:22 AM

FHWA REGION	STATE	PROJECT NO.	SHEET NO.	TOTAL SHEETS	AS BUILT
9	ARIZ.	202-A-NFA			
		202L MA 0			

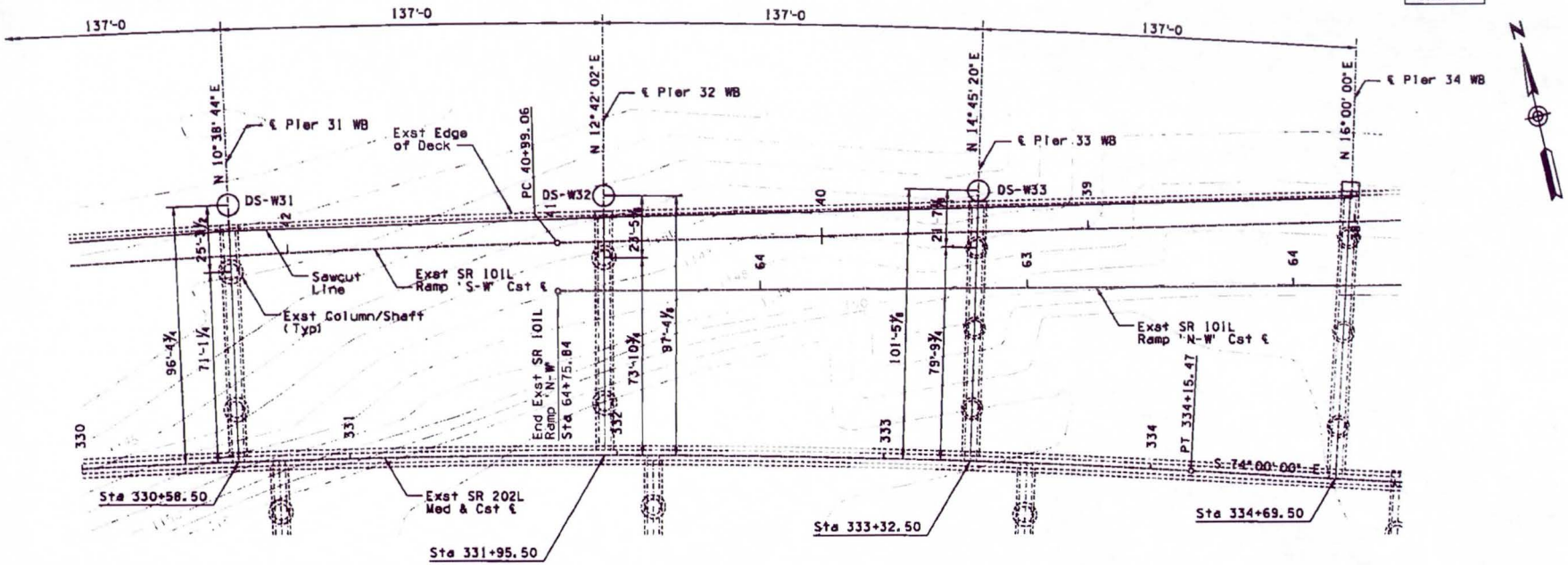

PARTIAL FOUNDATION PLAN WESTBOUND

Scale: 1" = 20'-0

Figure 2 (21 of 24)

REV	DATE	DESCRIPTION	BY
0	/ /		
	/ /		
	/ /		
	/ /		
	/ /		
	/ /		
	/ /		
	/ /		
	/ /		

	NAME	DATE
DESIGN	JRP	11/08
DRAWN	DMC	11/08
CHECKED	KLH	11/08

TYLIN INTERNATIONAL
Civil and Structural Engineers

ROUTE	MILEPOST	STRUCTURE NO.
202L	8.17	2268/2269

TRACS NO. H6871 01 C

ARIZONA DEPARTMENT OF TRANSPORTATION
INTERMODAL TRANSPORTATION DIVISION
BRIDGE GROUP

STA 286+
SALT RIVER BRIDGE EB & WB WDNG
FOUNDATION PLAN WB 10

I-10 / SR 51 - SR 101L

202-A-NFA

PRELIMINARY
95%
Review
NOT FOR CONSTRUCTION OR RECORDING

DWG. S-21 .52 OF 133

___ OF ___

DESIGN FILE: P:\SR 202 Design Build\CADD\Plans\Structures\TY Lin Bridges\221679.80 202 Design Build\CADD\2269 Salt River WB\100%\52_S2269_FL21.dgn
DATE: 2/23/2009 TIME: 11:53:33 AM

F.A.H.A. REGION	STATE	PROJECT NO.	SHEET NO.	TOTAL SHEETS	AS BUILT
9	ARIZ.	202-A-NFA			
		202L MA 0			

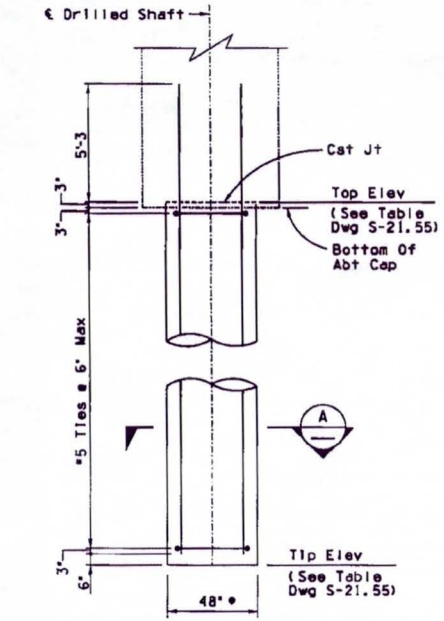

TYPICAL ABUTMENT DRILLED SHAFT
(Abt 1 EB)
Scale: 3/8" = 1'-0

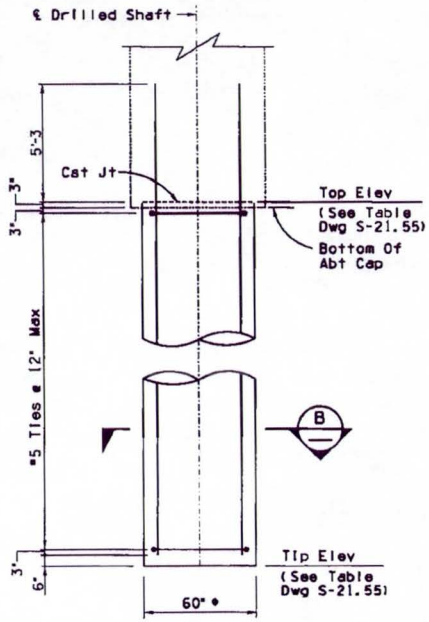

TYPICAL ABUTMENT DRILLED SHAFT
(Abt 1 WB , Abt 2 Ramp E-S)
Scale: 3/8" = 1'-0

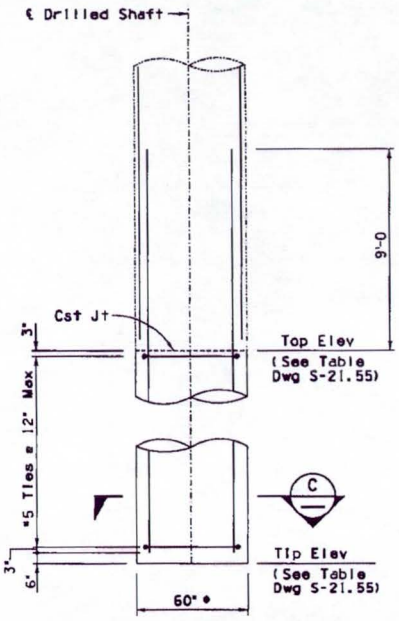

TYPICAL PIER DRILLED SHAFT
(Piers 1-5)
Scale: 3/8" = 1'-0

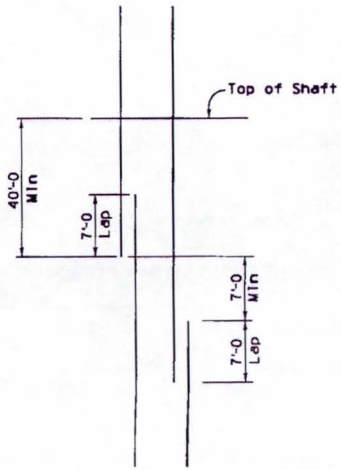

#11 DRILLED SHAFT LAP SPLICE DETAIL
(Abt and 60" ϕ Shafts)
Not To Scale

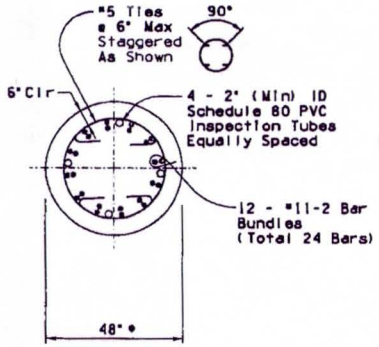

SECTION A
Scale: 1/2" = 1'-0

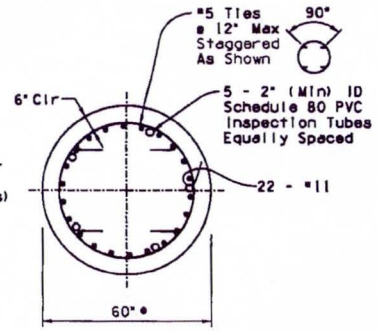

SECTION B
Scale: 1/2" = 1'-0

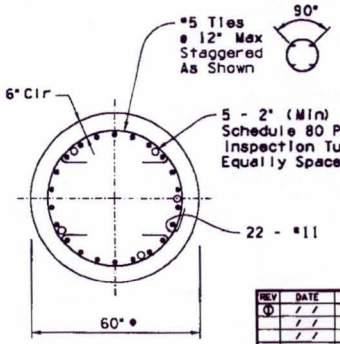

SECTION C
Scale: 1/2" = 1'-0

Figure 2 (22 of 24)

REV	DATE	DESCRIPTION	BY
0	/ /		
	/ /		
	/ /		
	/ /		
	/ /		
	/ /		
	/ /		
	/ /		
	/ /		

	NAME	DATE
DESIGN	KLM	12/08
DRAWN	RPC	12/08
CHECKED	JRP	12/08

TYLIN INTERNATIONAL
Civil and Structural Engineers

ROUTE	MILEPOST	STRUCTURE NO.
202L	8.17	2268/2269

ARIZONA DEPARTMENT OF TRANSPORTATION
INTERMODAL TRANSPORTATION DIVISION
BRIDGE GROUP

STA 286+
SALT RIVER BRIDGE EB & WB WDNG
DRILLED SHAFT DETAILS 1

I-10 / SR 51 - SR 101L

TRACS NO. H6871 01 C | 202-A-NFA

PRELIMINARY
95%
Review
NOT FOR CONSTRUCTION OR RECORDING

DWG. S-21 .53 OF (53)

___ OF ___

DESIGN FILE: P:\SR 202 Design Build\CADD\Plans\Structures\TY Lin Bridges\221679.00 202 Design Build\CADD\2268 Salt River EB\100X\53_S2268_DSL.dgn
DATE: 2/24/2009 TIME: 5:37:48 PM

F.H.W.A. REGION	STATE	PROJECT NO.	SHEET NO.	TOTAL SHEETS	AS BUILT
9	ARIZ.	202-A-NFA			
		202L MA 0			

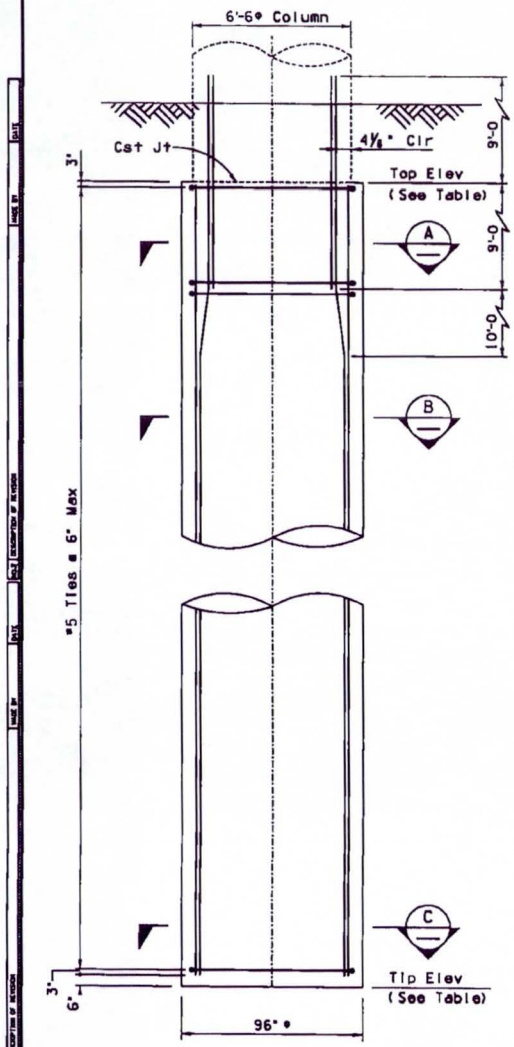

TYPICAL PIER DRILLED SHAFT

(EB Piers 6-37 & WB Piers 6-33)
Not To Scale

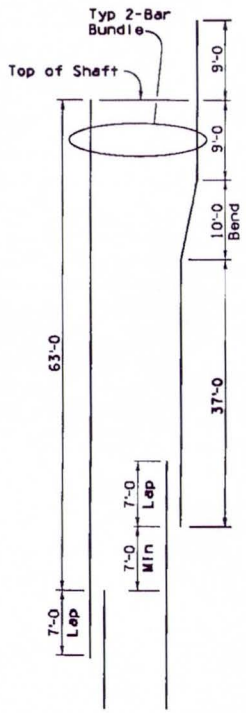

#11 DRILLED SHAFT LAP SPLICE DETAIL

(96" ø Shafts)
Not To Scale

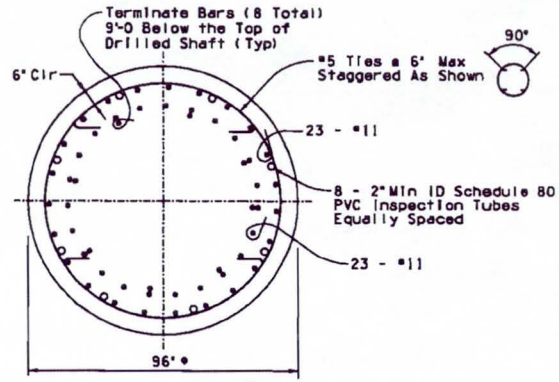

SECTION A
Scale: 1/2" = 1'-0

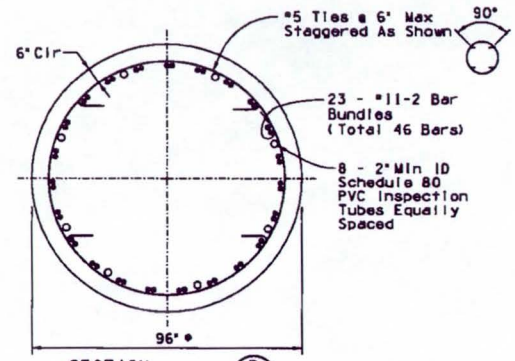

SECTION B
Scale: 1/2" = 1'-0

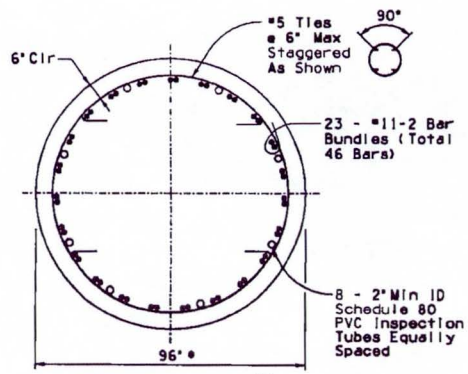

SECTION C
Scale: 1/2" = 1'-0

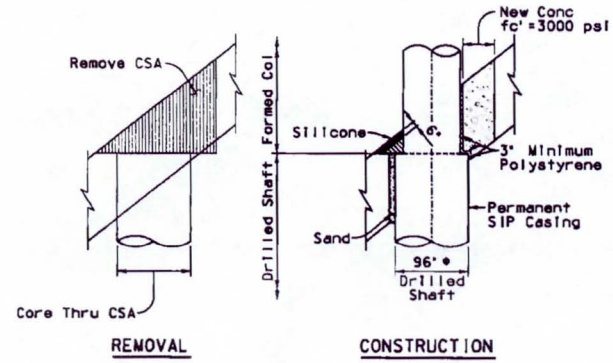

DRILLED SHAFT SEAL

No Scale

NOTE:

The silicone joint sealant shall be applied according to the Provisions of the Standard Specifications, Section 1011-8.

Figure 2 (23 of 24)

REV	DATE	DESCRIPTION	BY
0	/ /		
	/ /		
	/ /		
	/ /		
	/ /		
	/ /		
	/ /		
	/ /		
	/ /		
	/ /		

	NAME	DATE
DESIGN	KLM	12/08
DRAWN	RPC	12/08
CHECKED	JRP	12/08

TYLIN INTERNATIONAL
Civil and Structural Engineers

ROUTE	MILEPOST	STRUCTURE NO.
202L	8.17	2268/2269

ARIZONA DEPARTMENT OF TRANSPORTATION
INTERMODAL TRANSPORTATION DIVISION
BRIDGE GROUP

STA 286+
SALT RIVER BRIDGE EB & WB WDNG
DRILLED SHAFT DETAILS 2

I-10 / SR 51 - SR 101L

PRELIMINARY
95%
Review
NOT FOR CONSTRUCTION OR RECORDING

DWG. S-21 .54 OF 153

TRACS NO. H6871 01 C | 202-A-NFA | ___ OF ___

DESIGN FILE: P:\SR 202 Design Build\CADD\Plans\Structures\TY Lin Bridges\221679.88 202 Design Build\CADD\2268 Salt River EB\188Z\54_S2268_DS2.dgn
DATE: 2/25/2009 TIME: 9:53:56 AM

F.A.H.W.A. REGION	STATE	PROJECT NO.	SHEET NO.	TOTAL SHEETS	AS BUILT
9	ARIZ.	202-A-NFA			
		202L MA 0			

DRILLED SHAFT TABLE

East Bound

Location	ID	Northing	Easting	Diameter (Inches)	Top Elev	Tip Elev	Design Load (kips)	Axial Capacity (kips)	Group Efficiency Factor
Abt 1	DS-E1	886226.2906	701251.3450	48	1181.18	1109.00	465	694	0.67
Abt 1	DS-E2	886212.2909	701251.2548	48	1181.18	1109.00	465	694	0.67
Pier 1	DS-E3	886219.0351	701350.7504	60	1179.00	1110.00	1445	1897	0.76
Pier 2	DS-E4	886218.2125	701478.3678	60	1174.00	1035.00	1458	2430	0.60
Pier 3	DS-E5	886217.4076	701603.2352	60	1169.00	1082.00	1495	1963	0.76
Pier 4	DS-E6	886216.7269	701708.8230	60	1159.00	1085.00	1327	1742	0.76
Pier 5	DS-E7	886216.0463	701814.4108	60	1154.00	1060.00	1453	1907	0.76
Pier 6	DS-E8	886215.3657	701919.9986	96	1147.00	1074.00	2092	3000	0.70
Pier 7	DS-E9	886214.4632	702059.9957	96	1147.00	1074.00	2092	3000	0.70
Pier 8	DS-E10	886213.5608	702199.9928	96	1147.00	1044.00	2161	3099	0.70
Pier 9	DS-E11	886212.6584	702339.9899	96	1147.00	1050.00	2079	2982	0.70
Pier 10	DS-E12	886211.7559	702479.9870	96	1147.00	1055.00	2023	2901	0.70
Pier 11	DS-E13	886210.8535	702619.9841	96	1147.00	1038.00	2120	3041	0.70
Pier 12	DS-E14	886209.9511	702759.9811	96	1147.00	1043.00	2038	2922	0.70
Pier 13	DS-E15	886209.0486	702899.9782	96	1147.00	1042.00	2041	2927	0.70
Pier 14	DS-E16	886208.1462	703039.9753	96	1147.00	1071.00	2030	2912	0.70
Pier 15	DS-E17	886207.2438	703179.9724	96	1147.00	1074.00	1987	2850	0.70
Pier 16	DS-E18	886206.3413	703319.9695	96	1147.00	1041.00	2027	2908	0.70
Pier 17	DS-E19	886205.4389	703459.9666	96	1147.00	1041.00	2017	2893	0.70
Pier 18	DS-E20	886204.5365	703599.9637	96	1147.00	1067.00	1934	2774	0.70
Pier 19	DS-E21	886203.6340	703739.9608	96	1147.00	1065.00	2021	2898	0.70
Pier 20	DS-E22	886202.7316	703879.9579	96	1147.00	1065.00	2019	2895	0.70
Pier 21	DS-E23	886201.8292	704019.9550	96	1147.00	1065.00	2022	2900	0.70
Pier 22	DS-E24	886200.9267	704159.9521	96	1147.00	1063.00	2036	2920	0.70
Pier 23	DS-E25	886200.0243	704299.9491	96	1147.00	1063.00	2038	2923	0.70
Pier 24	DS-E26	886199.1219	704439.9462	96	1147.00	1065.00	2022	2900	0.70
Pier 25	DS-E27	886198.2194	704579.9433	96	1147.00	1064.00	2026	2906	0.70
Pier 26	DS-E28	886197.3170	704719.9404	96	1147.00	1062.00	2028	2909	0.70
Pier 27	DS-E29	886196.4146	704859.9375	96	1147.00	1065.00	2022	2900	0.70
Pier 28	DS-E30	886195.5122	704999.9326	96	1147.00	1061.00	2029	2910	0.70
Pier 29	DS-E31	886192.1309	705136.2831	96	1147.00	1061.00	2028	2909	0.70
Pier 30	DS-E32	886183.7556	705272.4182	96	1147.00	1065.00	2005	2875	0.70
Pier 31	DS-E33	886170.3974	705408.1549	96	1147.00	1050.00	2032	2914	0.70
Pier 32	DS-E34	886152.0743	705543.3110	96	1147.00	1050.00	2033	2915	0.70
Pier 33	DS-E35	886128.8108	705677.7049	96	1147.00	1060.00	1959	2809	0.70
Pier 34	DS-E36	886100.6383	705811.1561	96	1147.00	1039.00	2069	2967	0.70
Pier 35	DS-E37	886067.5946	705943.4853	96	1155.00	1050.00	1982	2841	0.70
Pier 36	DS-E38	886026.5020	706075.6827	96	1170.00	1040.00	2073	2922	0.71
Pier 37	DS-E39	885974.5455	706206.4264	96	1152.00	1055.00	1921	2768	0.69
Abt 2	DS-E40	885917.6557	706325.8748	60	1179.18	1120.18	885	1321	0.67

DRILLED SHAFT TABLE

West Bound

Location	ID	Northing	Easting	Diameter (Inches)	Top Elev	Tip Elev	Design Load (kips)	* Axial Capacity (kips)	Group Efficiency Factor
Abt 1	DS-W1	886405.6758	701447.5055	60	1183.18	1130.00	515	769	0.67
Pier 1	DS-W2	886406.2157	701554.4313	60	1176.00	1131.00	861	1253	0.69
Pier 2	N/A	N/A	N/A	N/A	N/A	N/A	N/A	N/A	N/A
Pier 3	DS-W3	886407.5327	701796.1247	60	1176.00	1131.00	1089	1525	0.71
Pier 4	DS-W4	886407.4659	701921.2369	60	1172.00	1127.00	1153	1600	0.72
Pier 5	DS-W5	886406.5635	702061.2341	60	1172.00	1112.00	1326	1884	0.70
Pier 6	DS-W6	886405.6610	702201.2313	96	1176.00	1081.00	1829	2700	0.68
Pier 7	DS-W7	886406.3732	702341.2387	96	1168.00	1081.00	1829	2700	0.68
Pier 8	DS-W8	886405.4707	702481.2357	96	1171.00	1081.00	1829	2700	0.68
Pier 9	DS-W9	886404.5683	702621.2328	96	1150.00	1065.00	1812	2675	0.68
Pier 10	DS-W10	886403.6659	702761.2300	96	1147.00	1074.00	1829	2700	0.68
Pier 11	DS-W11	886402.7634	702901.2270	96	1147.00	1074.00	1693	2500	0.68
Pier 12	DS-W12	886401.8610	703041.2240	96	1147.00	1074.00	1693	2500	0.68
Pier 13	DS-W13	886400.9586	703181.2211	96	1147.00	1074.00	1693	2500	0.68
Pier 14	DS-W14	886400.0561	703321.2184	96	1147.00	1067.00	1653	2440	0.68
Pier 15	DS-W15	886399.1537	703461.2153	96	1147.00	1045.00	1784	2634	0.68
Pier 16	DS-W16	886398.2513	703601.2126	96	1147.00	1067.00	1653	2440	0.68
Pier 17	DS-W17	886397.3488	703741.2097	96	1147.00	1065.00	1897	2800	0.68
Pier 18	DS-W18	886396.4464	703881.2068	96	1147.00	1065.00	1897	2800	0.68
Pier 19	DS-W19	886395.5440	704021.2037	96	1147.00	1065.00	1897	2800	0.68
Pier 20	DS-W20	886394.6415	704161.2009	96	1147.00	1065.00	1829	2700	0.68
Pier 21	DS-W21	886393.7391	704301.1980	96	1147.00	1065.00	1829	2700	0.68
Pier 22	DS-W22	886392.8367	704441.1950	96	1147.00	1065.00	1829	2700	0.68
Pier 23	DS-W23	886391.9342	704581.1922	96	1147.00	1065.00	1880	2775	0.68
Pier 24	DS-W24	886391.0318	704721.1893	96	1147.00	1065.00	1880	2775	0.68
Pier 25	DS-W25	886390.1294	704861.1864	96	1147.00	1065.00	1880	2775	0.68
Pier 26	DS-W26	886389.2269	705001.1853	96	1147.00	1065.00	1880	2775	0.68
Pier 27	DS-W27	886385.8010	705141.5613	96	1147.00	1065.00	1863	2750	0.68
Pier 28	DS-W28	886377.3436	705281.7241	96	1147.00	1065.00	1863	2750	0.68
Pier 29	DS-W29	886363.8656	705421.4935	96	1147.00	1065.00	1863	2750	0.68
Pier 30	DS-W30	886345.6418	705560.7286	96	1147.00	1065.00	1850	2750	0.67
Pier 31	DS-W31	886322.8038	705699.2991	96	1147.00	1065.00	1650	2750	0.60
Pier 32	DS-W32	886295.3119	705837.0526	96	1147.00	1065.00	1620	2700	0.60
Pier 33	DS-W33	886265.8211	705974.5368	96	1147.00	1065.00	1620	2700	0.60

NOTE:
* Axial Capacity is the product of the Group Efficiency Factor times the Capacity from the design chart.

DRILLED SHAFT NOTES:

1. Drilled Shafts shall be constructed in accordance with the requirements of Section 609 of the Standard Specifications.
2. In the event of a weak layer (silt, clay, loose sand, etc.) at the recommended elevation of the shaft bottom, the shaft and the reinforcing cage shall be extended to bear on firm soil as determined by the Engineer.
3. Inspection tubes shall not be attached to the longitudinal reinforcement and shall be placed between longitudinal reinforcement.
4. Any construction joint not shown on the project plans shall require the approval of the Engineer prior to construction.
5. Drilled shaft excavation is not permitted within 48 hours of completion of concrete placement of an adjacent drilled shaft. An adjacent drilled shaft is any drilled shaft within 4 diameters, measured center to center.

Figure 2 (24 of 24)

REV	DATE	DESCRIPTION	BY
0	/ /		
	/ /		
	/ /		
	/ /		
	/ /		
	/ /		
	/ /		
	/ /		
	/ /		

	NAME	DATE
DESIGN	KLM	12/08
DRAWN	RPC	12/08
CHECKED	JRP	12/08

TY-LIN INTERNATIONAL
Civil and Structural Engineers

ROUTE	SUBPROJ	STRUCTURE NO.
202L	8.17	2268/2269

TRACS NO. H6871 01 C

ARIZONA DEPARTMENT OF TRANSPORTATION
INTERMODAL TRANSPORTATION DIVISION
BRIDGE GROUP
STA 286+
SALT RIVER BRIDGE EB & WB WDNG
DRILLED SHAFT DETAIL 3
I-10 / SR 51 - SR 101L

202-A-NFA

PRELIMINARY
95%
Review
NOT FOR CONSTRUCTION OR RECORDING

DWG. 5-21 .55 OF 153

___ OF ___

DESIGN FILE: P:\SR 202 Design Build\CADD\Plans\Structures\TY Lin Bridges\221679.00 202 Design Build\CADD\2268 Salt River EB\100X\55_S2268_053.dgn
DATE: 2/23/2009 TIME: 4:18:21 PM

Figure 4
Salt River, Stage-Discharge Curve
River Station 120.5
Grade Control Structure #5

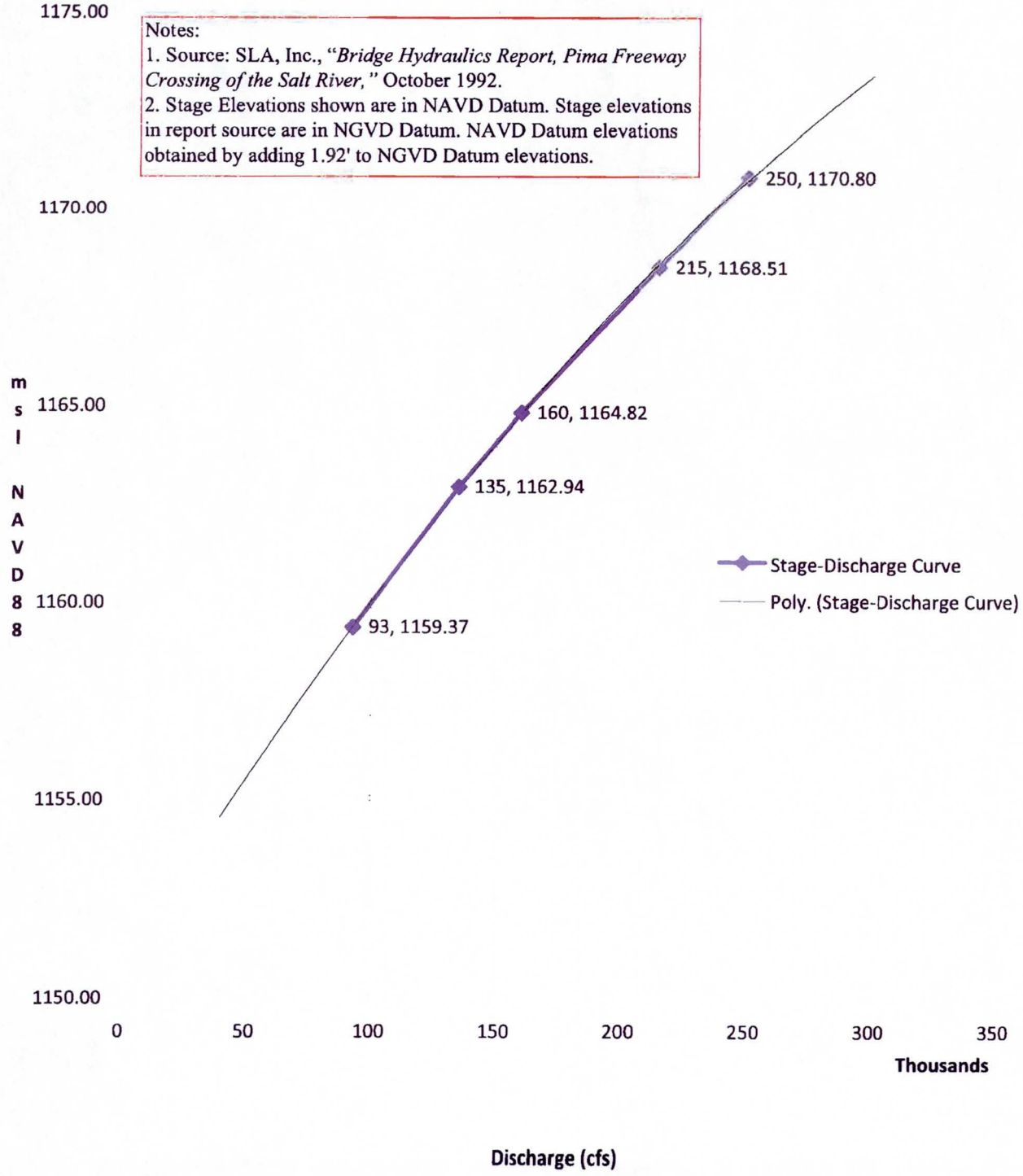

Figure 5
Chart for Estimating F_{bo} (After Blench)

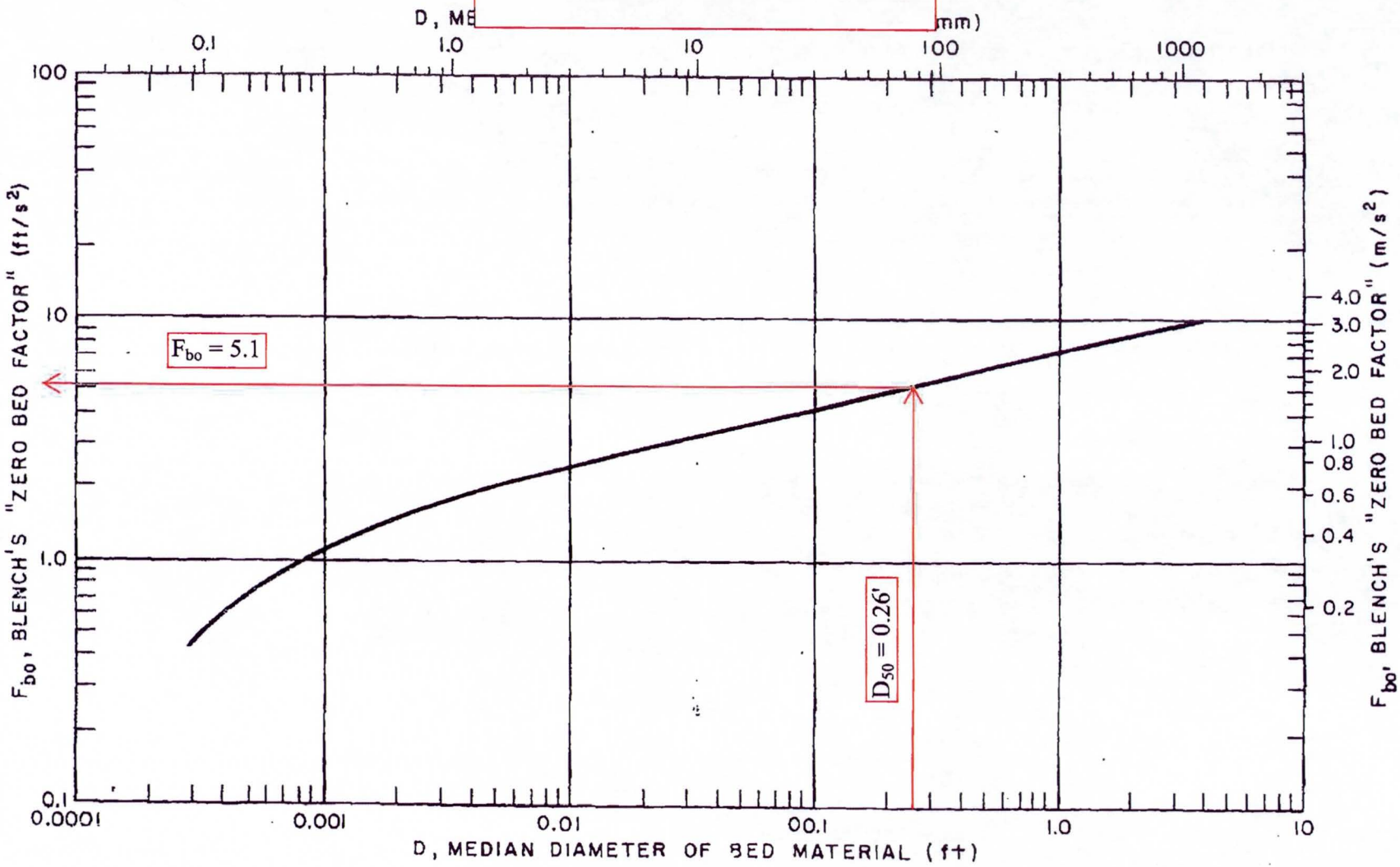

CHART FOR ESTIMATING F_{bo} (AFTER BLENCH)

Figure 9. - Chart for estimating F_{bo} (after Blench, 1969).

F.A.H.W.A. REGION	STATE	PROJECT NO.	SHEET NO.	TOTAL SHEETS	AS BUILT
9	ARIZ.	202-A-NFA			
		202L MA 000			

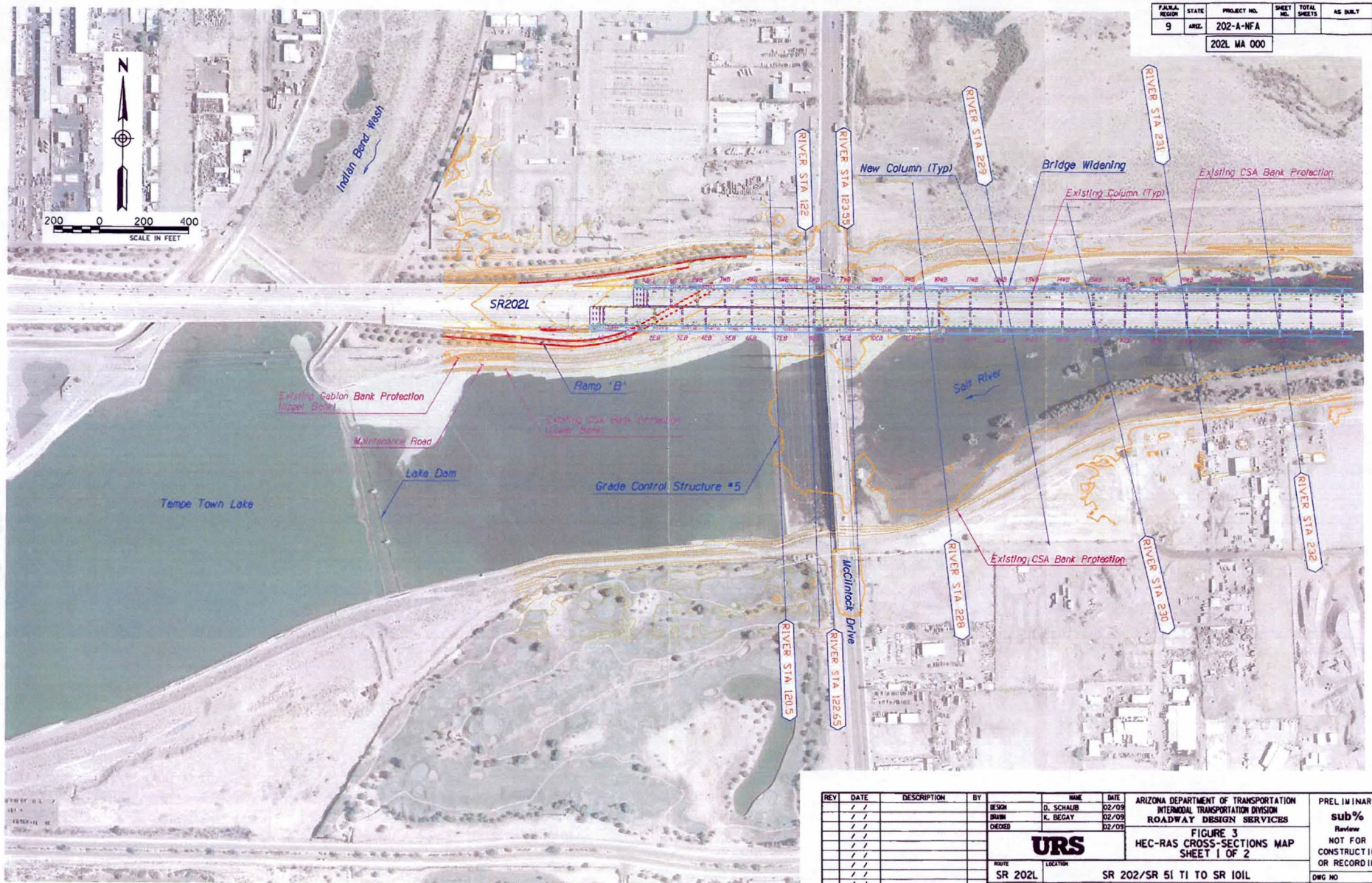

REV	DATE	DESCRIPTION	BY
	/ /		
	/ /		
	/ /		
	/ /		
	/ /		
	/ /		
	/ /		
	/ /		
	/ /		
	/ /		

	NAME	DATE
DESIGN	D. SCHAUB	02/09
DRAWN	K. BEGAY	02/09
CHECKED		02/09

URS

ARIZONA DEPARTMENT OF TRANSPORTATION
INTERMODAL TRANSPORTATION DIVISION
ROADWAY DESIGN SERVICES

FIGURE 3
HEC-RAS CROSS-SECTIONS MAP
SHEET 1 OF 2

ROUTE: SR 202L
LOCATION: SR 202/SR 51 TI TO SR 101L

TRACS NO. H6871 01C | 202-A-NFA

PRELIMINARY
sub%
Review
NOT FOR CONSTRUCTION OR RECORDING

DWG NO ___ OF ___

SURVEY NO. | FINISHED PLANS | REVISIONS | LOCATION | DATE | SURVEY NO. | FINISHED PLANS | REVISIONS | LOCATION | DATE

F.H.W.A. REGION	STATE	PROJECT NO.	SHEET NO.	TOTAL SHEETS	AS BUILT
9	ARIZ.	202-A-NFA			
		202L MA 000			

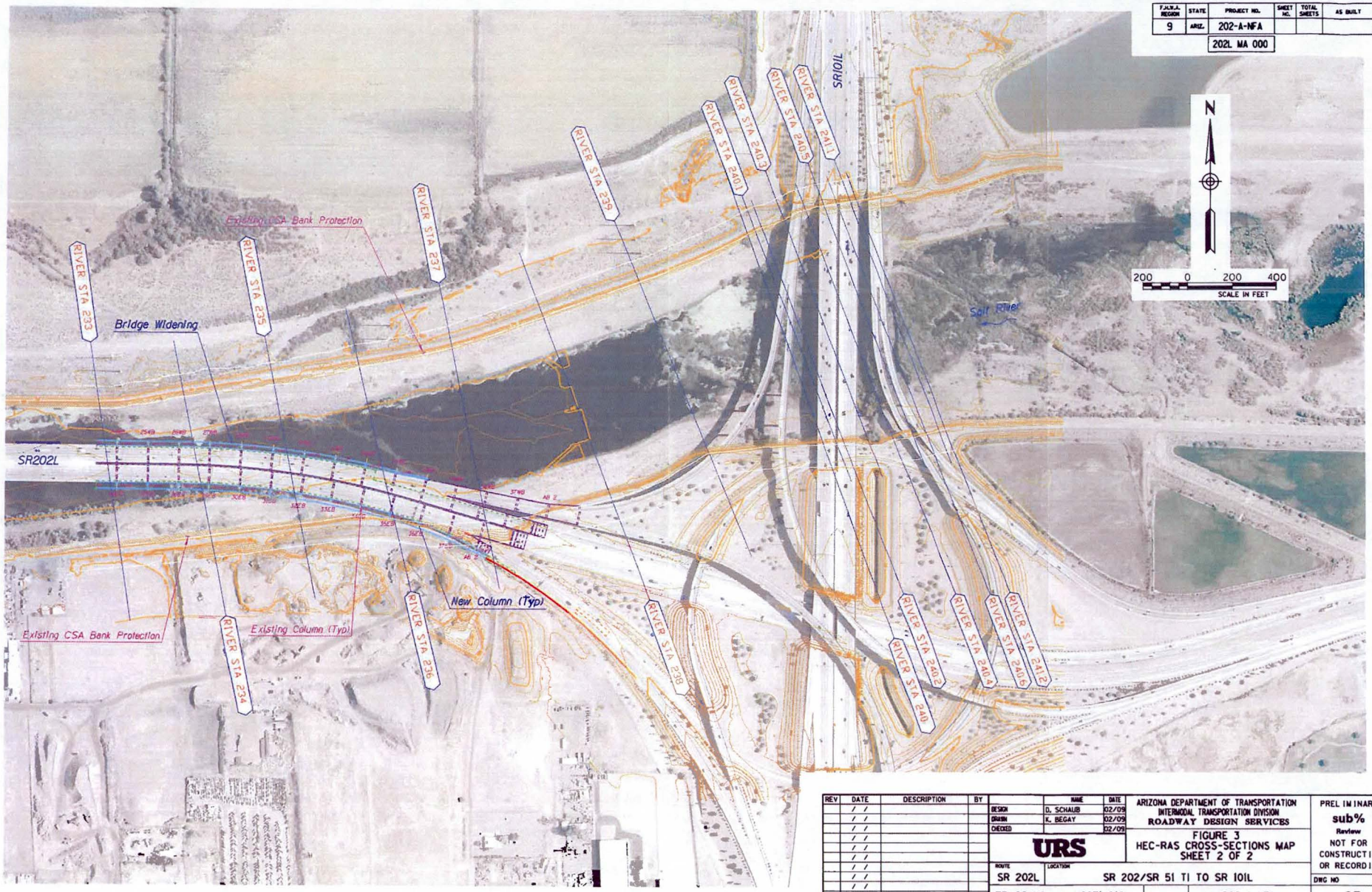

REV	DATE	DESCRIPTION	BY
	/ /		
	/ /		
	/ /		
	/ /		
	/ /		
	/ /		
	/ /		
	/ /		
	/ /		

	NAME	DATE
DESIGN	D. SCHAUB	02/09
DRAWN	K. BEGAY	02/09
CHECKED		02/09

URS

ARIZONA DEPARTMENT OF TRANSPORTATION
INTERMODAL TRANSPORTATION DIVISION
ROADWAY DESIGN SERVICES

FIGURE 3
HEC-RAS CROSS-SECTIONS MAP
SHEET 2 OF 2

ROUTE: SR 202L
LOCATION: SR 202/SR 51 TI TO SR 101L

TRACS NO. H6871 01C | 202-A-NFA

PRELIMINARY
sub%
Review
NOT FOR CONSTRUCTION OR RECORDING

DWG NO
___ OF ___

SURVEY NO. | FINISHED PLANS | REVISIONS | LOCATION | DATE | SURVEY NO. | FINISHED PLANS | REVISIONS | LOCATION | DATE

Figure 6 - HEC-RAS Water Surface Profiles for
Pre-RDM 100-Year and Superflood

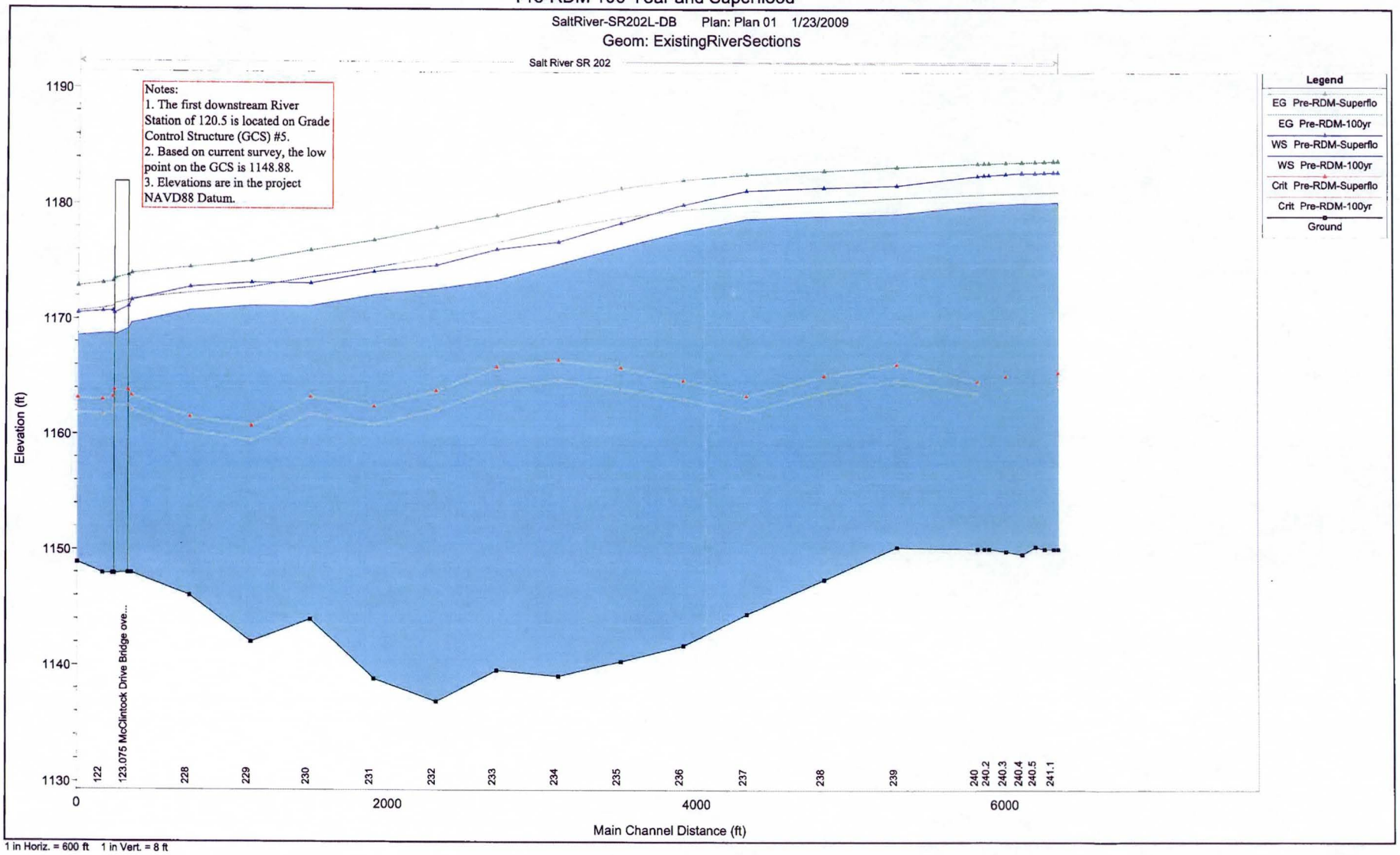

1 in Horiz. = 600 ft 1 in Vert. = 8 ft

Figure 7
HEC-RAS Cross-Sections

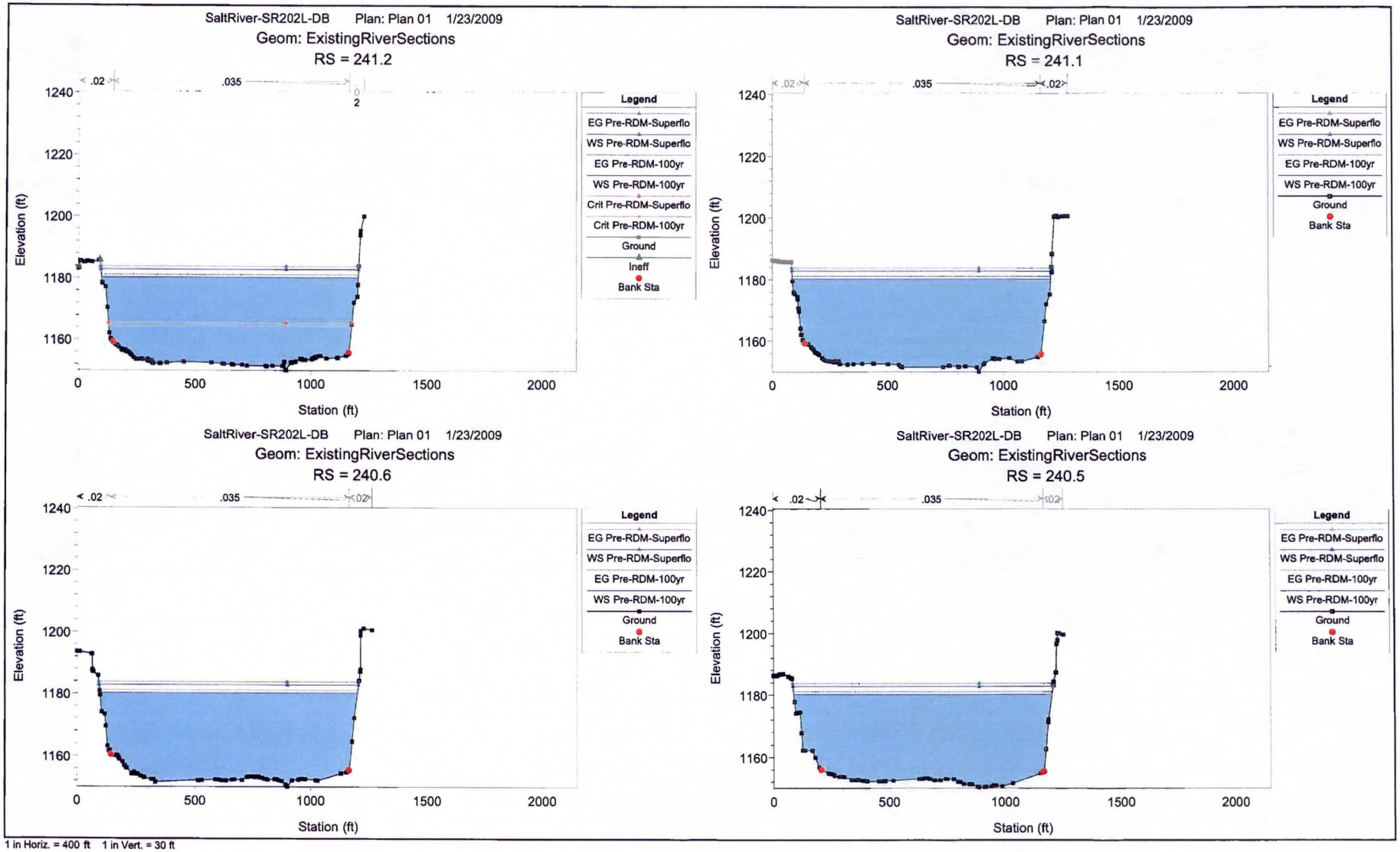

1 in Horiz. = 400 ft 1 in Vert. = 30 ft

Figure 7
HEC-RAS Cross-Sections

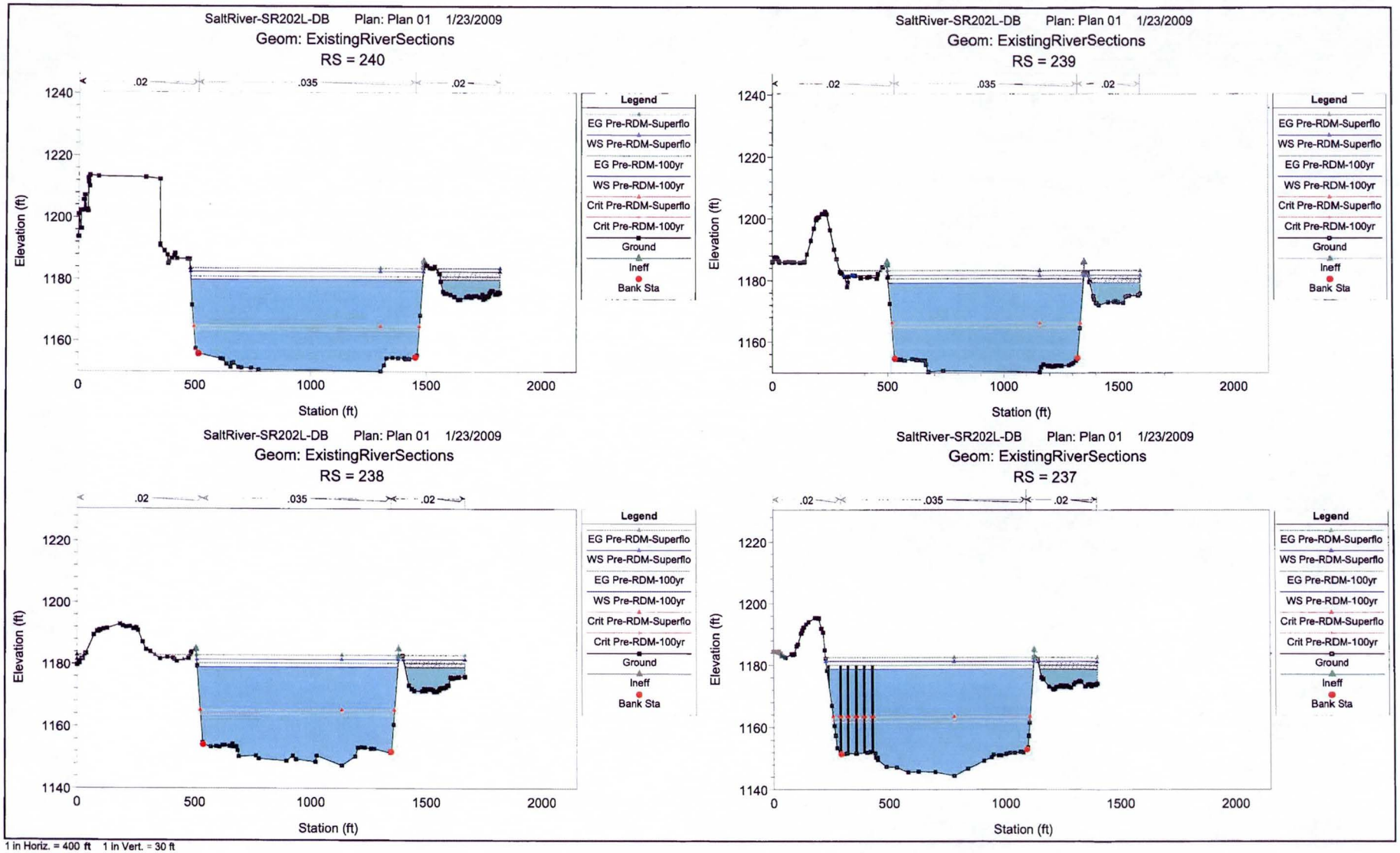

1 in Horiz. = 400 ft 1 in Vert. = 30 ft

Figure 7
HEC-RAS Cross-Sections

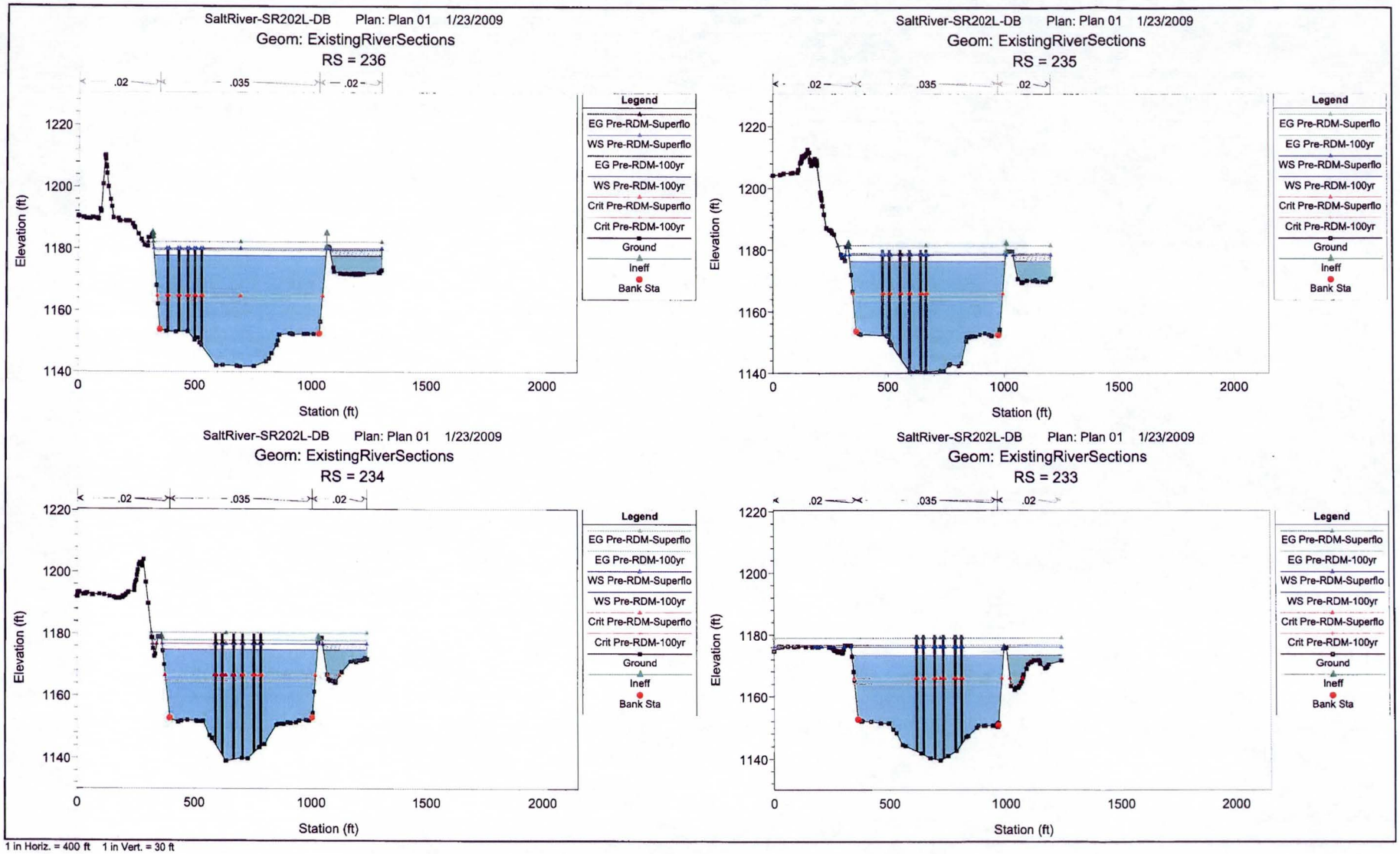

1 in Horiz. = 400 ft 1 in Vert. = 30 ft

Figure 7
HEC-RAS Cross-Sections

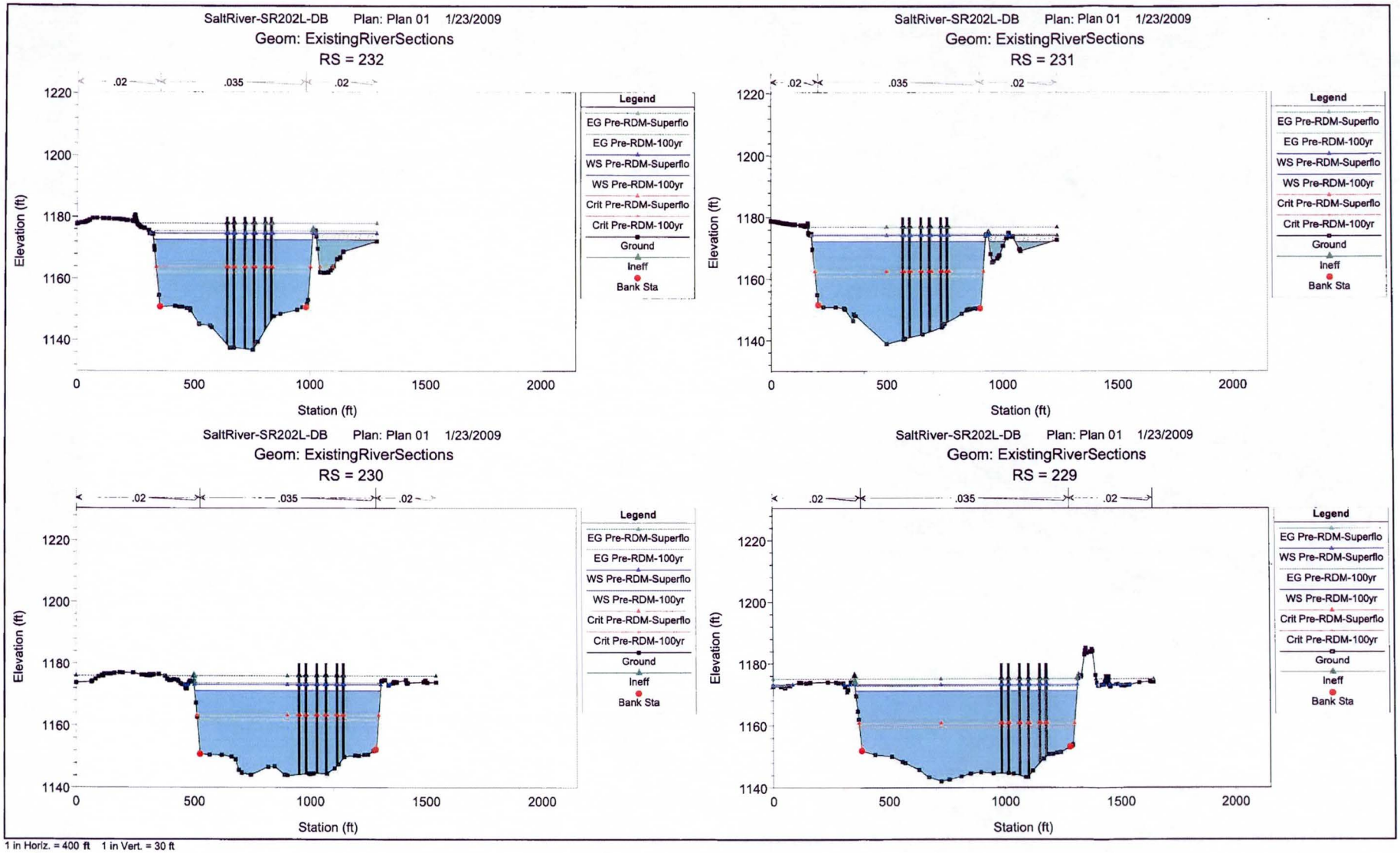

1 in Horiz. = 400 ft 1 in Vert. = 30 ft

Figure 7
HEC-RAS Cross-Sections

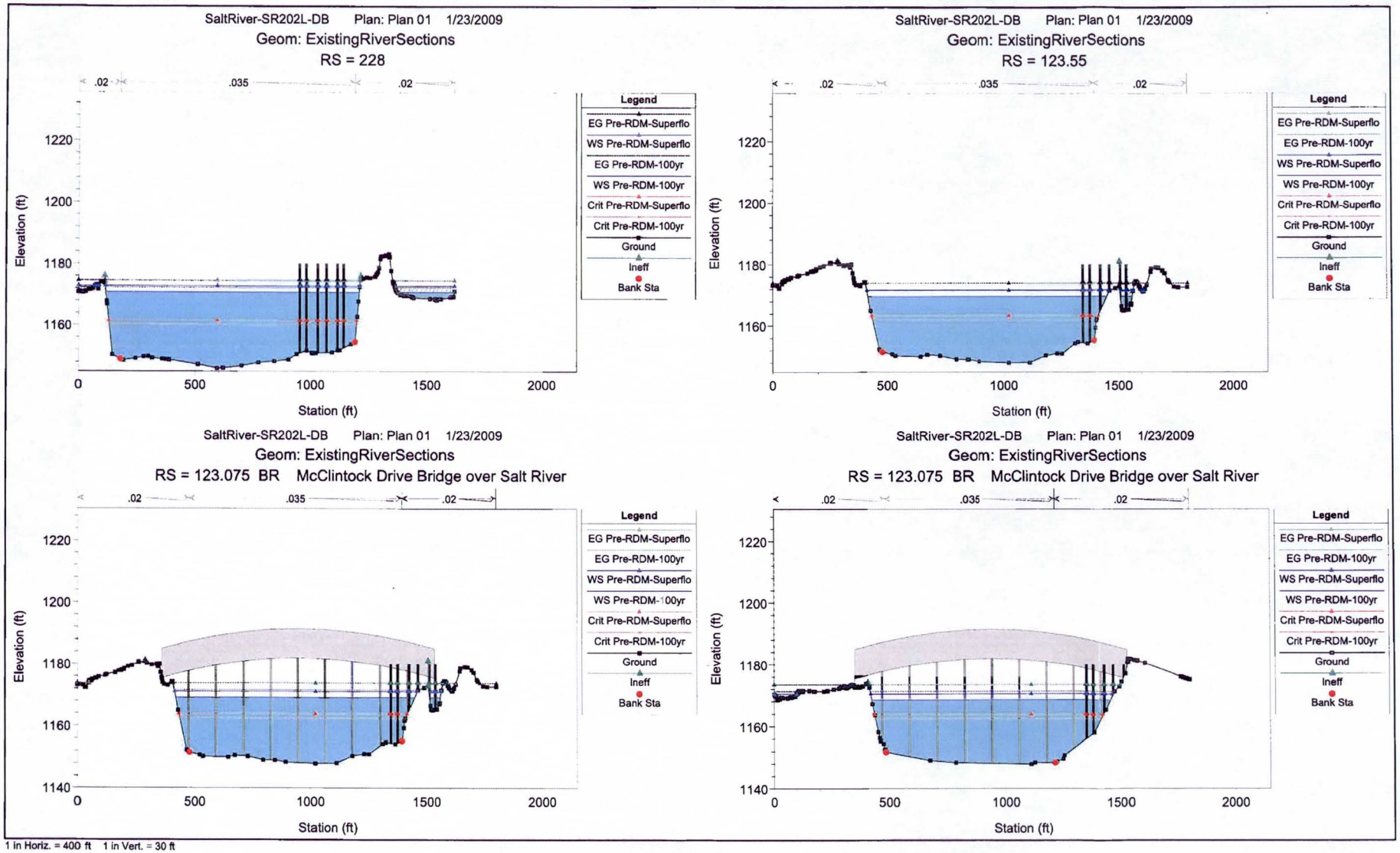

1 in Horiz. = 400 ft 1 in Vert. = 30 ft

Figure 7
HEC-RAS Cross-Sections

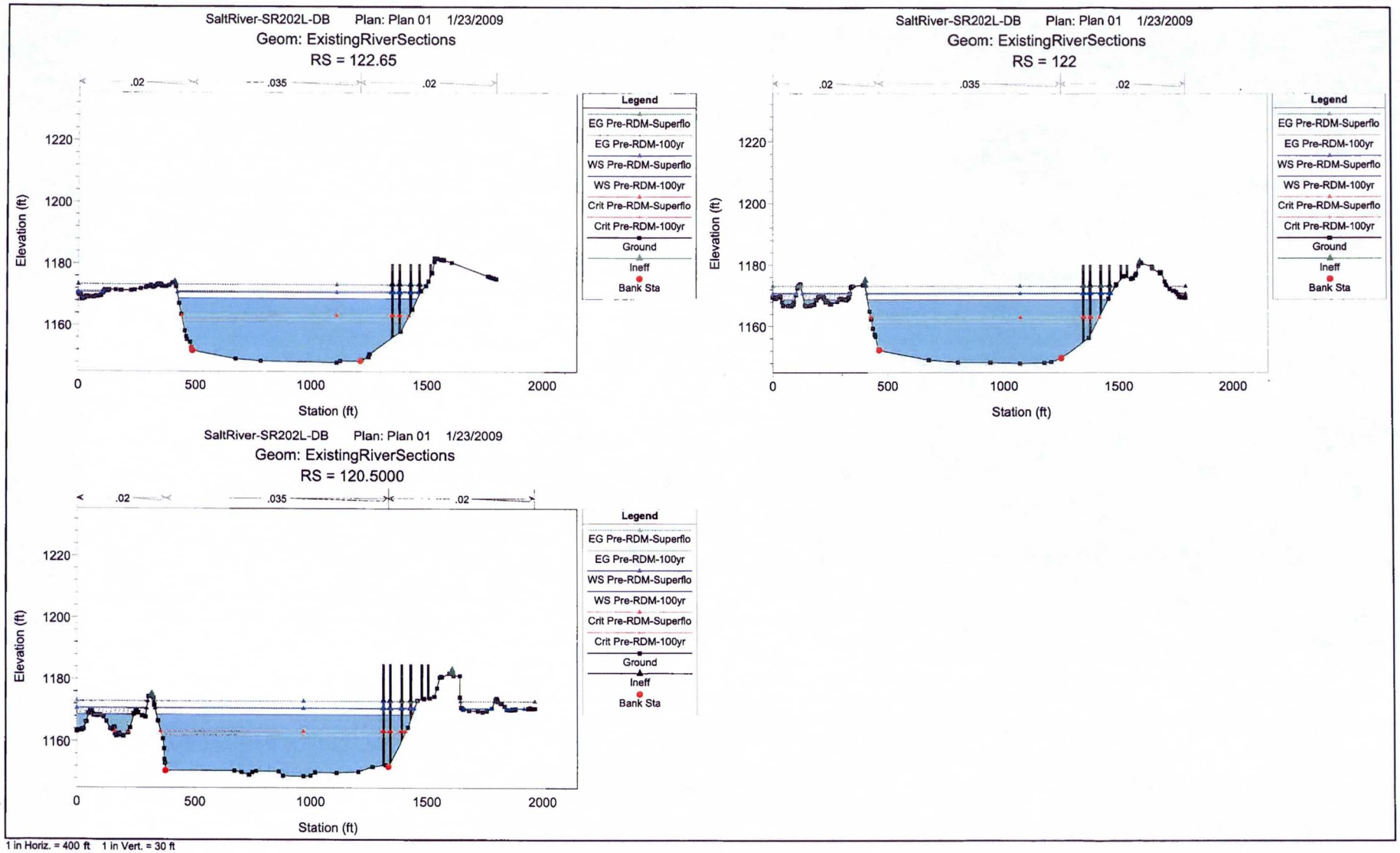

1 in Horiz. = 400 ft 1 in Vert. = 30 ft

Figure 8 - 100-Year Pre-RDM Scour Profile, Salt River Bridge

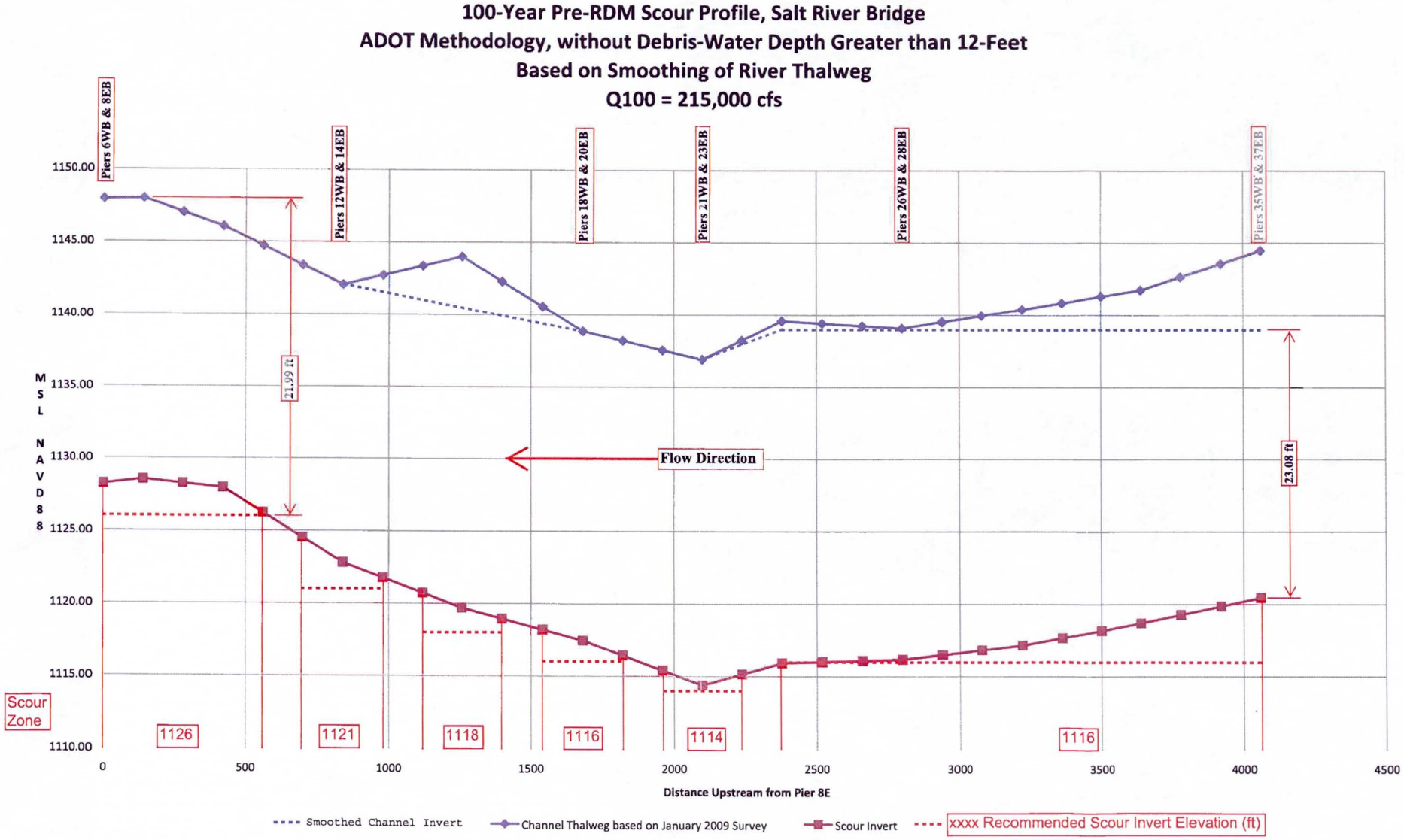

Figure 9 - Superflood Pre-RDM Scour Profile, Salt River Bridge

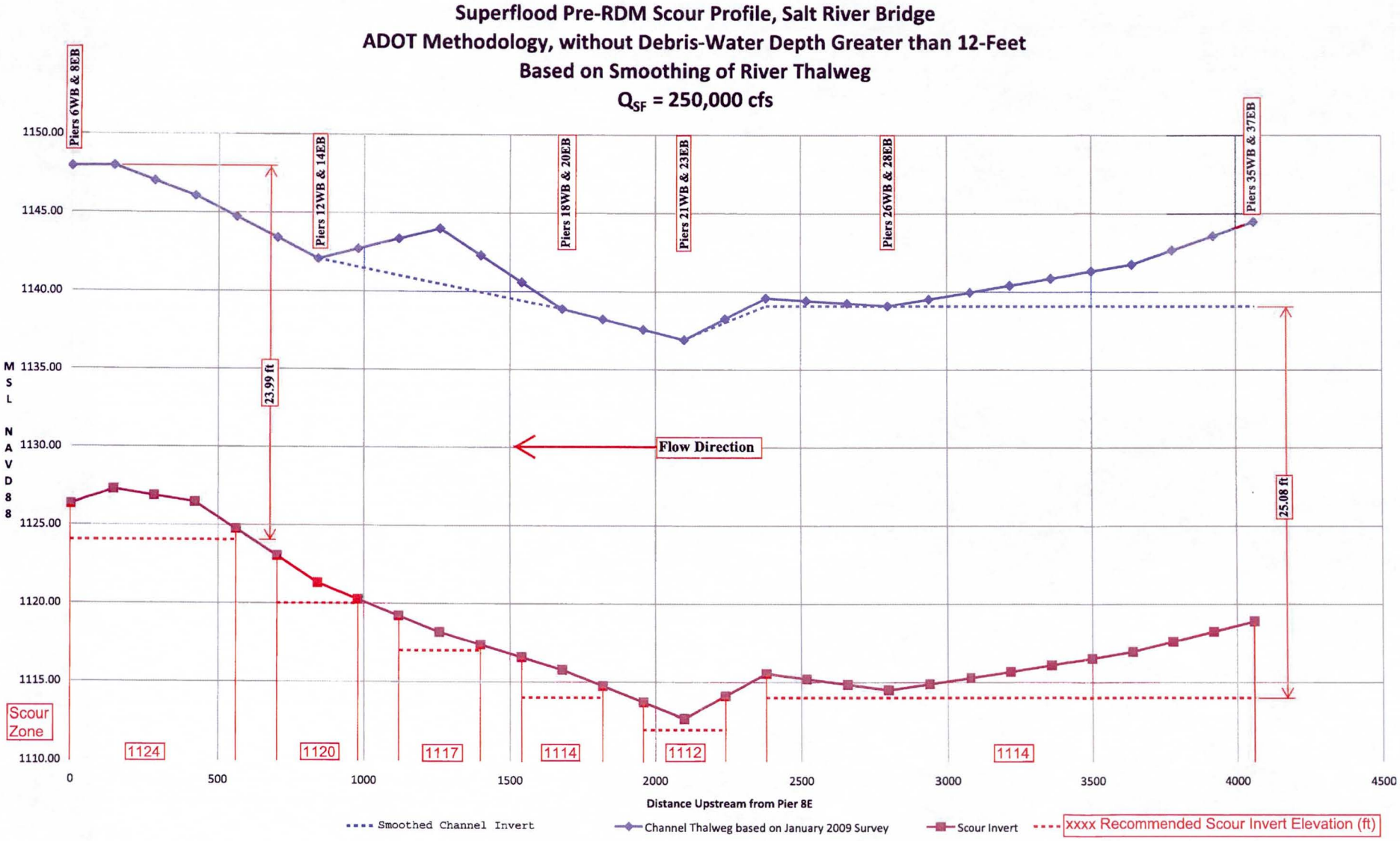

Table 1
Pier Scour Summary with Recommended Scour Invert Elevations
(ADOT Methodology)
for
Salt River Bridge
27 March 2009

Pier Identification[1]	Nearest HEC-RAS Cross-Section[1]	Distance from Pier 8EB	Streambed		Pre RDM 100-yr Flow (215,000 cfs)								Pre RDM Superflood (250,000 cfs)							
			Invert (HEC-RAS)[2]	Invert (Selected)[3]	General Scour	Pier Scour (No Debris)	Total Scour	Computed Scour Invert[4][5]	Recommended Scour Invert[6]	WSE	Flow Depth without Scour	Average Velocity without Scour	General Scour	Pier Scour (No Debris)	Total Scour	Scour Invert[4][5]	Recommended Scour Invert[6]	WSE	Flow Depth without Scour	Average Velocity without Scour
No.	No.	(ft)	(ft)	(ft)	(ft)	(ft)	(ft)	(ft)	(ft)	(ft)	(ft)	(fps)	(ft)	(ft)	(ft)	(ft)	(ft)	(ft)	(ft)	(fps)
6WB & 8EB[7]	**122.65**	**0**	1147.94	1147.94	2.26	17.45	19.70	1128.24	1126	1168.75	20.81	11.48	3.61	18.00	21.61	1126.33	1124	1170.71	22.77	12.01
7WB & 9EB	**123.55**	**140**	1147.99	1147.99	1.59	17.86	19.44	1128.55	1126	1169.64	21.65	11.59	2.29	18.42	20.71	1127.28	1124	1171.64	23.65	12.15
8WB & 10EB		280	1147.03	1147.03				1128.26	1126	1170.21	23.18	10.52				1126.87	1124	1172.22	25.19	11.08
9WB & 11EB	**228**	**420**	1146.06	1146.06	1.44	16.63	18.08	1127.98	1126	1170.78	24.72	9.44	2.29	17.30	19.60	1126.46	1124	1172.80	26.74	10.01
10WB & 12EB		560	1144.73	1144.73				1126.26	1126	1170.91	26.18	9.68				1124.75	1124	1172.93	28.20	10.30
11WB & 13EB		700	1143.40	1143.40				1124.53	1121	1171.04	27.64	9.92				1123.03	1120	1173.05	29.65	10.58
12WB & 14EB	**229**	**840**	1142.07	1142.07	1.44	17.82	19.27	1122.80	1121	1171.17	29.10	10.16	2.29	18.46	20.76	1121.31	1120	1173.18	31.11	10.87
13WB & 15EB		980	1142.71	1141.54				1121.76	1121	1171.17	28.46	10.99				1120.27	1120	1173.16	30.45	11.76
14WB & 16EB		1120	1143.36	1141.00				1120.73	1118	1171.17	27.81	11.82				1119.22	1117	1173.15	29.79	12.64
15WB & 17EB	**230**	**1260**	1144.00	1140.47	1.44	19.34	20.78	1119.69	1118	1171.17	27.17	12.65	2.29	20.00	22.29	1118.18	1117	1173.13	29.13	13.53
16WB & 18EB		1400	1142.29	1139.93				1118.95	1118	1171.49	29.20	12.52				1117.38	1117	1173.46	31.18	13.41
17WB & 19EB		1540	1140.57	1139.40				1118.20	1116	1171.81	31.24	12.38				1116.58	1114	1173.80	33.22	13.30
18WB & 20EB	**231**	**1680**	1138.86	1138.86	1.44	19.96	21.40	1117.46	1116	1172.13	33.27	12.25	2.29	20.78	23.08	1115.78	1114	1174.13	35.27	13.18
19WB & 21EB		1820	1138.21	1138.21				1116.43	1116	1172.31	34.11	12.60				1114.76	1114	1174.32	36.11	13.57
20WB & 22EB		1960	1137.55	1137.55				1115.40	1114	1172.50	34.94	12.94				1113.73	1112	1174.51	36.96	13.95
21WB & 23EB	**232**	**2100**	1136.90	1136.90	1.44	21.09	22.53	1114.37	1114	1172.68	35.78	13.29	2.29	21.90	24.20	1112.70	1112	1174.70	37.80	14.34
22WB & 24EB		2240	1138.24	1137.99				1115.14	1114	1173.05	34.81	13.88				1114.12	1112	1175.40	37.16	14.06
23WB & 25EB	**233**	**2380**	1139.58	1139.08	1.53	21.64	23.17	1115.91	1116	1173.41	33.83	14.46	2.29	21.24	23.53	1115.55	1114	1176.09	36.51	13.77
24WB & 26EB		2520	1139.41	1139.08				1115.99	1116	1173.88	34.46	14.27				1115.20	1114	1176.30	36.89	14.17
25WB & 27EB		2660	1139.25	1139.08				1116.08	1116	1174.34	35.10	14.08				1114.86	1114	1176.52	37.27	14.58
26WB & 28EB	**234**	**2800**	1139.08	1139.08	1.44	21.48	22.92	1116.16	1116	1174.81	35.73	13.89	2.29	22.27	24.56	1114.52	1114	1176.73	37.65	14.98
27WB & 29EB		2940	1139.52	1139.08				1116.49	1116	1175.30	35.78	13.51				1114.90	1114	1177.28	37.76	14.56
28WB & 30EB		3080	1139.96	1139.08				1116.81	1116	1175.79	35.83	13.12				1115.28	1114	1177.84	37.88	14.14
29WB & 31EB	**235**	**3220**	1140.40	1139.08	1.44	20.49	21.94	1117.14	1116	1176.28	35.88	12.74	2.29	21.12	23.41	1115.67	1114	1178.39	37.99	13.72
30WB & 32EB		3360	1140.85	1139.08				1117.65	1116	1176.74	35.89	12.14				1116.09	1114	1178.92	38.07	13.07
31WB & 33EB		3500	1141.30	1139.08				1118.17	1116	1177.21	35.91	11.55				1116.52	1114	1179.46	38.16	12.41
32WB & 34EB	**236**	**3640**	1141.75	1139.08	1.44	18.96	20.40	1118.68	1116	1177.67	35.92	10.95	2.29	19.84	22.14	1116.94	1114	1179.99	38.24	11.76
33WB & 35EB		3780	1142.66	1139.08				1119.27	1116	1178.02	35.36	10.27				1117.60	1114	1180.39	37.73	11.02
34WB & 36EB		3920	1143.57	1139.08				1119.85	1116	1178.37	34.80	9.59				1118.25	1114	1180.80	37.23	10.29
35WB & 37EB	**237**	**4060**	1144.48	1139.08	1.44	17.19	18.64	1120.44	1116	1178.72	34.24	8.91	2.29	17.88	20.17	1118.91	1114	1181.20	36.72	9.55
Averages			1141.79	1140.64	1.53	19.16	20.69	1119.78	1118	1173.42		11.92	2.40	19.77	22.17	1118.30	1116	1175.54		12.63

NOTES:

1) Pier identification and HEC-RAS Cross-Section identification and locations are shown on Figure 3.
2) The lowest streambed invert from the nearest Hec-RAS X-Section. The HEC-RAS X-Sections were deveoped from a DTM created with field survey conducted January 2009.
3) Based on smoothing the river thalweg as shown on the stream bed profile graph. See Figures 8 and 9.
4) Scour invert obtained by subtracting computed scour depth from the selected lowest streambed invert.
5) Scour invert elevations were determined for piers nearest the HEC-RAS x-sections. Interpolated values were determined for piers between the HEC-RAS x-sections.
6) Recommended scour depths are for pier groupings based on similar water surface elevations and similar scour inverts.
7) Use these scour calculations for Columns 6EB AND 7EB.

Table 2
Pier Scour Summary with Calculated Scour Inverts
(ADOT Methodology)
for
Salt River Bridge
27 March 2009

Pier Identification	Nearest HEC-RAS X-Section	Distance from Pier 8EB	Streambed		Post RDM 100-yr Flow (169,000 cfs)*(For Information only)*						Pre RDM 100-yr Flow (215,000 cfs)						Pre RDM Superflood (250,000 cfs)					
			Invert (HEC RAS)(1)	Invert (Selected)(2)	General Scour	Pier Scour (No Debris)	Total Scour	Scour Invert(3)(4)	WSE	Average Velocity	General Scour	Pier Scour (No Debris)	Total Scour	Scour Invert(3)(4)	WSE	Average Velocity	General Scour	Pier Scour (No Debris)	Total Scour	Scour Invert(3)(4)	WSE	Average Velocity
No.	No.	(ft)	(ft)	(ft)	(ft)	(ft)	(ft)	(ft)	(ft)	(fps)	(ft)	(ft)	(ft)	(ft)	(ft)	(fps)	(ft)	(ft)	(ft)	(ft)	(ft)	(fps)
6WB & 8EB(5)	122.65	0	1147.94	1147.94	1.57	16.70	18.27	1129.67	1165.82	10.79	2.26	17.45	19.70	1128.24	1168.75	11.48	3.61	18.00	21.61	1126.33	1170.71	12.01
7WB & 9EB	123.55	140	1147.99	1147.99	1.03	17.12	18.15	1129.84	1166.68	10.84	1.59	17.86	19.44	1128.55	1169.64	11.59	2.29	18.42	20.71	1127.28	1171.64	12.15
8WB & 10EB		280	1147.03	1147.03				1129.68	1167.25	9.73				1128.26	1170.21	10.52				1126.87	1172.22	11.08
9WB & 11EB	228	420	1146.06	1146.06	0.63	15.90	16.53	1129.53	1167.81	8.62	1.44	16.63	18.08	1127.98	1170.78	9.44	2.29	17.30	19.60	1126.46	1172.80	10.01
10WB & 12EB		560	1144.73	1144.73				1127.85	1167.95	8.79				1126.26	1170.91	9.68				1124.75	1172.93	10.30
11WB & 13EB		700	1143.40	1143.40				1126.16	1168.08	8.97				1124.53	1171.04	9.92				1123.03	1173.05	10.58
12WB & 14EB	229	840	1142.07	1142.07	0.63	16.96	17.59	1124.48	1168.22	9.14	1.44	17.82	19.27	1122.80	1171.17	10.16	2.29	18.46	20.76	1121.31	1173.18	10.87
13WB & 15EB		980	1142.71	1141.54				1123.52	1168.24	9.89				1121.76	1171.17	10.99				1120.27	1173.16	11.76
14WB & 16EB		1120	1143.36	1141.00				1122.56	1168.26	10.63				1120.73	1171.17	11.82				1119.22	1173.15	12.64
15WB & 17EB	230	1260	1144.00	1140.47	0.63	18.24	18.86	1121.61	1168.28	11.38	1.44	19.34	20.78	1119.69	1171.17	12.65	2.29	20.00	22.29	1118.18	1173.13	13.53
16WB & 18EB		1400	1142.29	1139.93				1120.84	1168.58	11.22				1118.95	1171.49	12.52				1117.38	1173.46	13.41
17WB & 19EB		1540	1140.57	1139.40				1120.08	1168.88	11.06				1118.20	1171.81	12.38				1116.58	1173.80	13.30
18WB & 20EB	231	1680	1138.86	1138.86	0.63	18.92	19.55	1119.31	1169.18	10.90	1.44	19.96	21.40	1117.46	1172.13	12.25	2.29	20.78	23.08	1115.78	1174.13	13.18
19WB & 21EB		1820	1138.21	1138.21				1118.28	1169.35	11.21				1116.43	1172.31	12.60				1114.76	1174.32	13.57
20WB & 22EB		1960	1137.55	1137.55				1117.25	1169.53	11.53				1115.40	1172.50	12.94				1113.73	1174.51	13.95
21WB & 23EB	232	2100	1136.90	1136.90	0.63	20.06	20.69	1116.21	1169.70	11.84	1.44	21.09	22.53	1114.37	1172.68	13.29	2.29	21.90	24.20	1112.70	1174.70	14.34
22WB & 24EB		2240	1138.24	1137.99				1117.14	1170.03	12.40				1115.14	1173.05	13.88				1114.12	1175.40	14.06
23WB & 25EB	233	2380	1139.58	1139.08	0.63	20.39	21.01	1118.07	1170.36	12.96	1.53	21.64	23.17	1115.91	1173.41	14.46	2.29	21.24	23.53	1115.55	1176.09	13.77
24WB & 26EB		2520	1139.41	1139.08				1118.06	1170.77	12.82				1115.99	1173.88	14.27				1115.20	1176.30	14.17
25WB & 27EB		2660	1139.25	1139.08				1118.06	1171.17	12.67				1116.08	1174.34	14.08				1114.86	1176.52	14.58
26WB & 28EB	234	2800	1139.08	1139.08	0.63	20.39	21.02	1118.06	1171.58	12.53	1.44	21.48	22.92	1116.16	1174.81	13.89	2.29	22.27	24.56	1114.52	1176.73	14.98
27WB & 29EB		2940	1139.52	1139.08				1118.40	1172.01	12.17				1116.49	1175.30	13.51				1114.90	1177.28	14.56
28WB & 30EB		3080	1139.96	1139.08				1118.74	1172.44	11.82				1116.81	1175.79	13.12				1115.28	1177.84	14.14
29WB & 31EB	235	3220	1140.40	1139.08	0.63	19.38	20.01	1119.07	1172.87	11.46	1.44	20.49	21.94	1117.14	1176.28	12.74	2.29	21.12	23.41	1115.67	1178.39	13.72
30WB & 32EB		3360	1140.85	1139.08				1119.42	1173.26	10.93				1117.65	1176.74	12.14				1116.09	1178.92	13.07
31WB & 33EB		3500	1141.30	1139.08				1119.76	1173.65	10.40				1118.17	1177.21	11.55				1116.52	1179.46	12.41
32WB & 34EB	236	3640	1141.75	1139.08	0.94	18.04	18.98	1120.10	1174.04	9.87	1.44	18.96	20.40	1118.68	1177.67	10.95	2.29	19.84	22.14	1116.94	1179.99	11.76
33WB & 35EB		3780	1142.66	1139.08				1120.80	1174.33	9.27				1119.27	1178.02	10.27				1117.60	1180.39	11.02
34WB & 36EB		3920	1143.57	1139.08				1121.50	1174.63	8.67				1119.85	1178.37	9.59				1118.25	1180.80	10.29
35WB & 37EB	237	4060	1144.48	1139.08	0.63	16.25	16.88	1122.20	1174.92	8.07	1.44	17.19	18.64	1120.44	1178.72	8.91	2.29	17.88	20.17	1118.91	1181.20	9.55
Averages			1141.79	1140.64	0.77	18.20	18.96	1121.54	1170.26	10.75	1.53	19.16	20.69	1119.78	1173.42	11.92	2.40	19.77	22.17	1118.30	1175.54	12.63

* This table contains scour depths for the Post RDM 100-year flow of 169,000 cfs. These calculations are included for information only, and are not to be used to perform the structural design for the bridge foundations.

NOTES:

1) The lowest streambed invert from the nearest Hec-RAS X-Section. The HEC-RAS X-Sections were deveoped from a DTM created with field survey conducted January 2009.
2) Based on smoothing the river thalweg as shown on the stream bed profile graph. See Figure 8 and 9.
3) Scour invert obtained by subtracting computed scour depth from the selected lowest streambed invert.
4) Scour invert elevations were determined for piers nearest the HEC-RAS x-sections. Interpolated values were determined for piers between the HEC-RAS x-sections.
5) Use these scour calculations for Columns 6EB AND 7EB.

Figure 7
HEC-RAS Cross-Sections

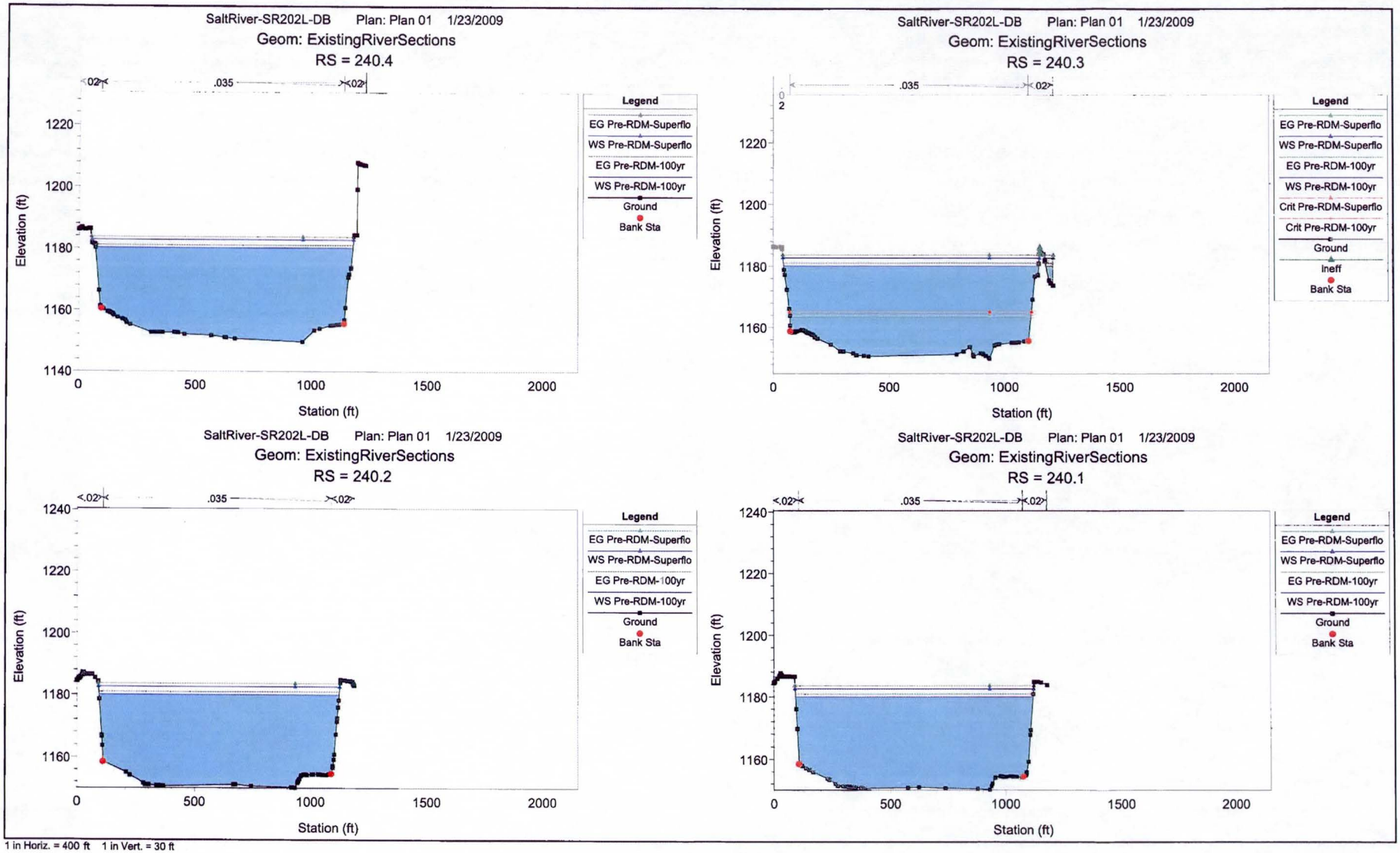

1 in Horiz. = 400 ft 1 in Vert. = 30 ft

Table 2A

PIER SCOUR: FHWA (HEC 18) CSU Equation

ADOT CONTROLLING

Project:	SR 202 Crossing of the Salt River	**Computed by:**	Dave Schaub
Location:	**Pier 8EB/6WB Scour Depth @ Bridge**	**Date:**	26-Jan-08
Description:	**Without Debris**	**Checked by:**	
	Elevations in 1988 Datum	**Date:**	
	HEC-RAS RS 122.65		

ADOT Methodology

References:

1) FHWA, *Evaluating Scour At Bridges* (HEC-18), Fourth Edition, May 2001
2) ADOT, *Highway Drainage Design Manual-Hydraulics* , January 2006
3) Tucson, *Standards Manual for Drainage Design & Floodplain Management* , (Revised July 98)
4) SLA Inc., *Final Hydraulics & Scour Analysis Report-Salt River* , July 1997

Pier Input:

Pier Diameter:	8.00	ft
Debris:	0.00	ft on each side
Effective Pier Diameter (a):	8.00	ft

Hydraulic Input:

Storm Event (Years):	Post-100-yr*	Pre-100-yr	SF
Flow, Q (cfs):	169,000	215,000	250,000
W.S.E., (ft):	1165.82	1168.75	1170.71
Depth of Flow, Y_1 (ft):	17.88	20.81	22.77
Average Velocity, V_1 (fps):	10.79	11.48	12.01
Froude Number, Fr_1:	0.46	0.45	0.45

Correction Factors:

Pier Type, K_1 (ADOT Policy):	1.0	***Cylindrical Columns***
Angle of Attack, K_2:	1.0	
Bed Condition, K_3:	1.1	
Armouring, K_4:	1.0	

Particle Size: (Ref. 4)

D_{52}:	90.5	mm	3.563	inches
D_{89}:	181.0	mm	7.126	inches

Scour Equation: $Y_s/Y_1 = 2*K_1*K_2*K_3*K_4*(a/Y_1)^{0.65}Fr_1^{0.43}$

Local Pier Scour

Post-RDM 100-yr Scour Depth (ft)	**Y_s (Post 100-yr) =**	16.70	
Pre-RDM 100-yr Scour Depth (ft)	**Y_s (Pre 100-yr) =**		17.45
SF Scour Depth (ft)	**Y_s (SF) =**		18.00

General Scour: Zeller Equation (1981)

Additional Scour Components

General Scour (GS) (ft) at X-Section	1.57	2.26	3.61
General Scour (GS)(ft) Average, Station 120.5 to 238	0.63	1.44	2.29
General Scour (ft) Selected: larger of 2 above GSs	1.57	2.26	3.61
Long Term Degradation (ft) — Downstream Grade Control Structure	0	0	0
Bend Scour (ft)	0	0	0

Total Scour

Total Post-RDM 100-yr Scour Depth:	18.27		
Total Pre-RDM 100-yr Scour Depth:		19.70	
Total SF Scour Depth:			21.61
Min. Channel Elevation (HEC-RAS)(1988 Datum):	1147.94	1147.94	1147.94
Scour Hole Bottom Elevation:	**1129.67**	**1128.24**	**1126.33**

* ***Post RDM 100-year scour depths are for information only, and are not for bridge foundation design.***

Table 2B

PIER SCOUR: FHWA (HEC 18) CSU Equation

ADOT CONTROLLING

Project:	SR 202 Crossing of the Salt River	**Computed by:**	Dave Schaub
Location:	**Pier 9EB/7WB Scour Depth @ Bridge**	**Date:**	26-Jan-08
Description:	**Without Debris**	**Checked by:**	
	Elevations in 1988 Datum	**Date:**	
	HEC-RAS RS 123.55		

ADOT Methodology

References:

1) FHWA, *Evaluating Scour At Bridges* (HEC-18), Fourth Edition, May 2001
2) ADOT, *Highway Drainage Design Manual-Hydraulics* , January 2006
3) Tucson, *Standards Manual for Drainage Design & Floodplain Management* , (Revised July 98)
4) SLA Inc., *Final Hydraulics & Scour Analysis Report-Salt River* , July 1997

Pier Input:

Pier Diameter:	8.00	ft
Debris:	0.00	ft on each side
Effective Pier Diameter (a):	8.00	ft

Hydraulic Input:

Storm Event (Years):	Post-100-yr*	Pre-100-yr	SF
Flow, Q (cfs):	169,000	215,000	250,000
W.S.E., (ft):	1166.68	1169.64	1171.64
Depth of Flow, Y_1 (ft):	18.69	21.65	23.65
Average Velocity, V_1 (fps):	10.84	11.59	12.15
Froude Number, Fr_1:	0.47	0.46	0.46

Correction Factors:

Pier Type, K_1 (ADOT Policy):	1.0	***Cylindrical Columns***
Angle of Attack, K_2:	1.0	
Bed Condition, K_3:	1.1	
Armouring, K_4:	1.0	

Particle Size:

D_{52}:	90.5	mm	3.563	inches
D89:	181.0	mm	7.126	inches

Scour Equation: $Y_s/Y_1 = 2*K_1*K_2*K_3*K_4*(a/Y_1)^{0.65}Fr_1^{0.43}$

Local Pier Scour

Post-RDM 100-yr Scour Depth (ft)	**Y_s (Post 100-yr) =**	17.12		
Pre-RDM 100-yr Scour Depth (ft)	**Y_s (Pre 100-yr) =**		17.86	
SF Scour Depth (ft)	**Y_s (SF) =**			18.42

Additional Scour Components

General Scour: Zeller Equation

General Scour (GS) (ft) at X-Section	1.03	1.59	2.06
General Scour (GS)(ft) Average, Station 120.5 to 238	0.63	1.44	2.29
General Scour (ft) Selected: larger of 2 above GSs	1.03	1.59	2.29
Long Term Degradation (ft) — Downstream Grade Control Structure	0	0	0
Bend Scour (ft)	0	0	0

Total Scour

Total Post-RDM 100-yr Scour Depth:	18.15		
Total Pre-RDM 100-yr Scour Depth:		19.44	
Total SF Scour Depth:			20.71
Min. Channel Elevation (HEC-RAS)(1988 Datum):	1147.99	1147.99	1147.99
Scour Hole Bottom Elevation:	**1129.84**	**1128.55**	**1127.28**

* ***Post RDM 100-year scour depths are for information only, and are not for bridge foundation design.***

Table 2C

PIER SCOUR: FHWA (HEC 18) CSU Equation — ***ADOT CONTROLLING***

Project:	SR 202 Crossing of the Salt River	**Computed by:**	Dave Schaub
Location:	**Pier 11EB/9WB Scour Depth @ Bridge**	**Date:**	26-Jan-08
Description:	**Without Debris**	**Checked by:**	
	Elevations in 1988 Datum	**Date:**	
	HEC-RAS RS 228		

ADOT Methodology

References:

1) FHWA, *Evaluating Scour At Bridges* (HEC-18), Fourth Edition, May 2001
2) ADOT, *Highway Drainage Design Manual-Hydraulics* , January 2006
3) Tucson, *Standards Manual for Drainage Design & Floodplain Management* , (Revised July 98)
4) SLA Inc., *Final Hydraulics & Scour Analysis Report-Salt River* , July 1997

Pier Input:

Pier Diameter:	8.00	ft
Debris:	0.00	ft on each side
Effective Pier Diameter (a):	8.00	ft

Hydraulic Input:

Storm Event (Years):	Post-100-yr*	Pre-100-yr	SF
Flow, Q (cfs):	169,000	215,000	250,000
W.S.E., (ft):	1167.81	1170.78	1172.80
Depth of Flow, Y_1 (ft):	21.75	24.72	26.74
Average Velocity, V_1 (fps):	8.62	9.44	10.01
Froude Number, Fr_1:	0.35	0.35	0.36

Correction Factors:

Pier Type, K_1 (ADOT Policy):	1.0	***Cylindrical Columns***
Angle of Attack, K_2:	1.0	
Bed Condition, K_3:	1.1	
Armouring, K_4:	1.0	

Particle Size:

D_{52}:	90.5	mm	3.563	inches
D89:	181.0	mm	7.126	inches

Scour Equation: $Y_s/Y_1 = 2*K_1*K_2*K_3*K_4*(a/Y_1)^{0.65}Fr_1^{0.43}$

Local Pier Scour

Post-RDM 100-yr Scour Depth (ft)	**Y_s (Post 100-yr) =**	15.90	
Pre-RDM 100-yr Scour Depth (ft)	**Y_s (Pre 100-yr) =**		16.63
SF Scour Depth (ft)	**Y_s (SF) =**		17.30

Additional Scour Components

General Scour: Zeller Equation

General Scour (GS) (ft) at X-Section	0.00	0.73	1.54
General Scour (GS)(ft) Average, Station 120.5 to 238	0.63	1.44	2.29
General Scour (ft) Selected: larger of 2 above GSs	0.63	1.44	2.29
Long Term Degradation (ft) — Downstream Grade Control Structure	0	0	0
Bend Scour (ft)	0	0	0

Total Scour

Total Post-RDM 100-yr Scour Depth:	16.53		
Total Pre-RDM 100-yr Scour Depth:		18.08	
Total SF Scour Depth:			19.60
Min. Channel Elevation (HEC-RAS)(1988 Datum):	1146.06	1146.06	1146.06
Scour Hole Bottom Elevation:	**1129.53**	**1127.98**	**1126.46**

* ***Post RDM 100-year scour depths are for information only, and are not for bridge foundation design.***

Table 2D

PIER SCOUR: FHWA (HEC 18) CSU Equation

ADOT CONTROLLING

Project:	SR 202 Crossing of the Salt River	**Computed by:**	Dave Schaub
Location:	**Pier 14EB/12WB Scour Depth @ Bridge**	**Date:**	26-Jan-08
Description:	**Without Debris**	**Checked by:**	
	Elevations in 1988 Datum	**Date:**	
	HEC-RAS RS 229		

ADOT Methodology

References:

1) FHWA, *Evaluating Scour At Bridges* (HEC-18), Fourth Edition, May 2001
2) ADOT, *Highway Drainage Design Manual-Hydraulics* , January 2006
3) Tucson, *Standards Manual for Drainage Design & Floodplain Management* , (Revised July 98)
4) SLA Inc., *Final Hydraulics & Scour Analysis Report-Salt River* , July 1997

Pier Input:

Pier Diameter:	8.00	ft
Debris:	0.00	ft on each side
Effective Pier Diameter (a):	8.00	ft

Hydraulic Input:

Storm Event (Years):	Post-100-yr*	Pre-100-yr	SF
Flow, Q (cfs):	169,000	215,000	250,000
W.S.E., (ft):	1168.22	1171.17	1173.18
Depth of Flow, Y_1 (ft):	26.15	29.10	31.11
Average Velocity, V_1 (fps):	9.14	10.16	10.87
Froude Number, Fr_1:	0.35	0.36	0.37

Correction Factors:

Pier Type, K_1 (ADOT Policy):	1.0	***Cylindrical Columns***
Angle of Attack, K_2:	1.0	
Bed Condition, K_3:	1.1	
Armouring, K_4:	1.0	

Particle Size:

D_{52}:	90.5	mm	3.563	inches
D89:	181.0	mm	7.126	inches

Scour Equation: $Y_s/Y_1 = 2*K_1*K_2*K_3*K_4*(a/Y_1)^{0.65}Fr_1^{0.43}$

Local Pier Scour

Post-RDM 100-yr Scour Depth (ft)	**Y_s (Post 100-yr) =**	16.96	
Pre-RDM 100-yr Scour Depth (ft)	**Y_s (Pre 100-yr) =**		17.82
SF Scour Depth (ft)	**Y_s (SF) =**		18.46

General Scour: Zeller Equation

Additional Scour Components

General Scour (GS) (ft) at X-Section	0.00	0.00	0.36
General Scour (GS)(ft) Average, Station 120.5 to 238	0.63	1.44	2.29
General Scour (ft) Selected: larger of 2 above GSs	0.63	1.44	2.29
Long Term Degradation (ft) — Downstream Grade Control Structure	0	0	0
Bend Scour (ft)	0	0	0

Total Scour

Total Post-RDM 100-yr Scour Depth:	17.59		
Total Pre-RDM 100-yr Scour Depth:		19.27	
Total SF Scour Depth:			20.76
Min. Channel Elevation (HEC-RAS)(1988 Datum):	1142.07	1142.07	1142.07
Scour Hole Bottom Elevation:	**1124.48**	**1122.80**	**1121.31**

* ***Post RDM 100-year scour depths are for information only, and are not for bridge foundation design.***

Table 2E

PIER SCOUR: FHWA (HEC 18) CSU Equation — ***ADOT CONTROLLING***

Project:	SR 202 Crossing of the Salt River	**Computed by:**	Dave Schaub
Location:	**Pier 17EB/15WB Scour Depth @ Bridge**	**Date:**	26-Jan-08
Description:	**Without Debris**	**Checked by:**	
	Elevations in 1988 Datum	**Date:**	
	HEC-RAS RS 230		

ADOT Methodology

References:

1) FHWA, *Evaluating Scour At Bridges* (HEC-18), Fourth Edition, May 2001
2) ADOT, *Highway Drainage Design Manual-Hydraulics* , January 2006
3) Tucson, *Standards Manual for Drainage Design & Floodplain Management* , (Revised July 98)
4) SLA Inc., *Final Hydraulics & Scour Analysis Report-Salt River* , July 1997

Pier Input:

Pier Diameter:	8.00	ft
Debris:	0.00	ft on each side
Effective Pier Diameter (a):	8.00	ft

Hydraulic Input:

Storm Event (Years):	Post-100-yr*	Pre-100-yr	SF
Flow, Q (cfs):	169,000	215,000	250,000
W.S.E., (ft):	1168.28	1171.17	1173.13
Depth of Flow, Y_1 (ft):	24.28	27.17	29.13
Average Velocity, V_1 (fps):	11.38	12.65	13.53
Froude Number, Fr_1:	0.44	0.46	0.47

Correction Factors:

Pier Type, K_1 (ADOT Policy):	1.0	***Cylindrical Columns***
Angle of Attack, K_2:	1.0	
Bed Condition, K_3:	1.1	
Armouring, K_4:	1.0	

Particle Size:

D_{52}:	90.5	mm	3.563	inches
D89:	181.0	mm	7.126	inches

Scour Equation: $Y_s/Y_1 = 2*K_1*K_2*K_3*K_4*(a/Y_1)^{0.65}Fr_1^{0.43}$

Local Pier Scour

Post-RDM 100-yr Scour Depth (ft)	**Y_s (Post 100-yr) =**	18.24	
Pre-RDM 100-yr Scour Depth (ft)	**Y_s (Pre 100-yr) =**		19.34
SF Scour Depth (ft)	**Y_s (SF) =**		20.00

General Scour: Zeller Equation

Additional Scour Components

General Scour (GS) (ft) at X-Section	0.00	0.00	0.00
General Scour (GS)(ft) Average, Station 120.5 to 238	0.63	1.44	2.29
General Scour (ft) Selected: larger of 2 above GSs	0.63	1.44	2.29
Long Term Degradation (ft) — Downstream Grade Control Structure	0	0	0
Bend Scour (ft)	0	0	0

Total Scour

Total Post-RDM 100-yr Scour Depth:	18.86		
Total Pre-RDM 100-yr Scour Depth:		20.78	
Total SF Scour Depth:			22.29
Min. Channel Elevation (HEC-RAS)(1988 Datum):	1144.00	1144.00	1144.00
Scour Hole Bottom Elevation:	**1125.14**	**1123.22**	**1121.71**

* ***Post RDM 100-year scour depths are for information only, and are not for bridge foundation design.***

Table 2F

PIER SCOUR: FHWA (HEC 18) CSU Equation — ***ADOT CONTROLLING***

Project:	SR 202 Crossing of the Salt River	**Computed by:**	Dave Schaub
Location:	**Pier 20EB/18WB Scour Depth @ Bridge**	**Date:**	26-Jan-08
Description:	**Without Debris**	**Checked by:**	
	Elevations in 1988 Datum	**Date:**	
	HEC-RAS RS 231		

ADOT Methodology

References:
1) FHWA, *Evaluating Scour At Bridges* (HEC-18), Fourth Edition, May 2001
2) ADOT, *Highway Drainage Design Manual-Hydraulics* , January 2006
3) Tucson, *Standards Manual for Drainage Design & Floodplain Management* , (Revised July 98)
4) SLA Inc., *Final Hydraulics & Scour Analysis Report-Salt River* , July 1997

Pier Input:

Pier Diameter:	8.00	ft
Debris:	0.00	ft on each side
Effective Pier Diameter (a):	8.00	ft

Hydraulic Input:

Storm Event (Years):	Post-100-yr*	Pre-100-yr	SF
Flow, Q (cfs):	169,000	215,000	250,000
W.S.E., (ft):	1169.18	1172.13	1174.13
Depth of Flow, Y_1 (ft):	30.32	33.27	35.27
Average Velocity, V_1 (fps):	10.90	12.25	13.18
Froude Number, Fr_1:	0.40	0.42	0.44

Correction Factors:

Pier Type, K_1 (ADOT Policy):	1.0	***Cylindrical Columns***
Angle of Attack, K_2:	1.0	
Bed Condition, K_3:	1.1	
Armouring, K_4:	1.0	

Particle Size:

D_{52}:	90.5	mm	3.563	inches
D89:	181.0	mm	7.126	inches

Scour Equation: $Y_s/Y_1 = 2*K_1*K_2*K_3*K_4*(a/Y_1)^{0.65}Fr_1^{0.43}$

Local Pier Scour

Post-RDM 100-yr Scour Depth (ft)	**Y_s (Post 100-yr) =**	18.92		
Pre-RDM 100-yr Scour Depth (ft)	**Y_s (Pre 100-yr) =**		19.96	
SF Scour Depth (ft)	**Y_s (SF) =**			20.78

General Scour: Zeller Equation

Additional Scour Components

General Scour (GS) (ft) at X-Section		0.00	0.68	1.99
General Scour (GS)(ft) Average, Station 120.5 to 238		0.63	1.44	2.29
General Scour (ft) Selected: larger of 2 above GSs		0.63	1.44	2.29
Long Term Degradation (ft)	Downstream Grade Control Structure	0	0	0
Bend Scour (ft)		0	0	0

Total Scour

Total Post-RDM 100-yr Scour Depth:	19.55		
Total Pre-RDM 100-yr Scour Depth:		21.40	
Total SF Scour Depth:			23.08
Min. Channel Elevation (HEC-RAS)(1988 Datum):	1138.86	1138.86	1138.86
Scour Hole Bottom Elevation:	**1119.31**	**1117.46**	**1115.78**

* ***Post RDM 100-year scour depths are for information only, and are not for bridge foundation design.***

Table 2G

PIER SCOUR: FHWA (HEC 18) CSU Equation — ***ADOT CONTROLLING***

Project:	SR 202 Crossing of the Salt River	**Computed by:**	Dave Schaub
Location:	**Pier 23EB/21WB Scour Depth @ Bridge**	**Date:**	26-Jan-08
Description:	**Without Debris**	**Checked by:**	
	Elevations in 1988 Datum	**Date:**	
	HEC-RAS RS 232		

ADOT Methodology

References:

1) FHWA, *Evaluating Scour At Bridges* (HEC-18), Fourth Edition, May 2001
2) ADOT, *Highway Drainage Design Manual-Hydraulics* , January 2006
3) Tucson, *Standards Manual for Drainage Design & Floodplain Management* , (Revised July 98)
4) SLA Inc., *Final Hydraulics & Scour Analysis Report-Salt River* , July 1997

Pier Input:

Pier Diameter:	8.00	ft
Debris:	0.00	ft on each side
Effective Pier Diameter (a):	8.00	ft

Hydraulic Input:

Storm Event (Years):	Post-100-yr*	Pre-100-yr	SF
Flow, Q (cfs):	169,000	215,000	250,000
W.S.E., (ft):	1169.70	1172.68	1174.70
Depth of Flow, Y_1 (ft):	32.79	35.77	37.79
Average Velocity, V_1 (fps):	11.84	13.29	14.34
Froude Number, Fr_1:	0.43	0.45	0.47

Correction Factors:

Pier Type, K_1 (ADOT Policy):	1.0	***Cylindrical Columns***
Angle of Attack, K_2:	1.0	
Bed Condition, K_3:	1.1	
Armouring, K_4:	1.0	

Particle Size:

D_{52}:	90.5	mm	3.563	inches
D89:	181.0	mm	7.126	inches

Scour Equation: $Y_s/Y_1 = 2*K_1*K_2*K_3*K_4*(a/Y_1)^{0.65}Fr_1^{0.43}$

Local Pier Scour

Post-RDM 100-yr Scour Depth (ft)	**Y_s (Post 100-yr) =**	20.06	
Pre-RDM 100-yr Scour Depth (ft)	**Y_s (Pre 100-yr) =**		21.09
SF Scour Depth (ft)	**Y_s (SF) =**		21.90

General Scour: Zeller Equation

Additional Scour Components

General Scour (GS) (ft) at X-Section	0.00	1.29	1.86
General Scour (GS)(ft) Average, Station 120.5 to 238	0.63	1.44	2.29
General Scour (ft) Selected: larger of 2 above GSs	0.63	1.44	2.29
Long Term Degradation (ft) — Downstream Grade Control Structure	0	0	0
Bend Scour (ft)	0	0	0

Total Scour

Total Post-RDM 100-yr Scour Depth:	20.69		
Total Pre-RDM 100-yr Scour Depth:		22.53	
Total SF Scour Depth:			24.20
Min. Channel Elevation (HEC-RAS)(1988 Datum):	1136.90	1136.90	1136.90
Scour Hole Bottom Elevation:	**1116.21**	**1114.37**	**1112.70**

* ***Post RDM 100-year scour depths are for information only, and are not for bridge foundation design.***

Table 2H

PIER SCOUR: FHWA (HEC 18) CSU Equation — ***ADOT CONTROLLING***

Project:	SR 202 Crossing of the Salt River	**Computed by:**	Dave Schaub
Location:	**Pier 25EB/23WB Scour Depth @ Bridge**	**Date:**	26-Jan-08
Description:	**Without Debris**	**Checked by:**	
	Elevations in 1988 Datum	**Date:**	
	HEC-RAS RS 233		

ADOT Methodology

References:

1) FHWA, *Evaluating Scour At Bridges* (HEC-18), Fourth Edition, May 2001
2) ADOT, *Highway Drainage Design Manual-Hydraulics* , January 2006
3) Tucson, *Standards Manual for Drainage Design & Floodplain Management* , (Revised July 98)
4) SLA Inc., *Final Hydraulics & Scour Analysis Report-Salt River* , July 1997

Pier Input:

Pier Diameter:	8.00	ft
Debris:	0.00	ft on each side
Effective Pier Diameter (a):	8.00	ft

Hydraulic Input:

Storm Event (Years):	Post-100-yr*	Pre-100-yr	SF
Flow, Q (cfs):	169,000	215,000	250,000
W.S.E., (ft):	1170.36	1173.41	1176.09
Depth of Flow, Y_1 (ft):	30.78	33.83	36.51
Average Velocity, V_1 (fps):	12.96	14.46	13.77
Froude Number, Fr_1:	0.47	0.50	0.45

Correction Factors:

Pier Type, K_1 (ADOT Policy):	1.0	***Cylindrical Columns***
Angle of Attack, K_2:	1.0	
Bed Condition, K_3:	1.1	
Armouring, K_4:	1.0	

Particle Size:

D_{52}:	90.5	mm	3.563	inches
D89:	181.0	mm	7.126	inches

Scour Equation: $Y_s/Y_1 = 2*K_1*K_2*K_3*K_4*(a/Y_1)^{0.65}Fr_1^{0.43}$

Local Pier Scour

Post-RDM 100-yr Scour Depth (ft)	**Y_s (Post 100-yr) =**	20.39	
Pre-RDM 100-yr Scour Depth (ft)	**Y_s (Pre 100-yr) =**		21.64
SF Scour Depth (ft)	**Y_s (SF) =**		21.24

General Scour: Zeller Equation

Additional Scour Components

General Scour (GS) (ft) at X-Section	0.00	1.53	1.67
General Scour (GS)(ft) Average, Station 120.5 to 238	0.63	1.44	2.29
General Scour (ft) Selected: larger of 2 above GSs	0.63	1.53	2.29
Long Term Degradation (ft) — Downstream Grade Control Structure	0	0	0
Bend Scour (ft)	0	0	0

Total Scour

Total Post-RDM 100-yr Scour Depth:	21.01		
Total Pre-RDM 100-yr Scour Depth:		23.17	
Total SF Scour Depth:			23.53
Min. Channel Elevation (HEC-RAS)(1988 Datum):	1139.58	1139.58	1139.58
Scour Hole Bottom Elevation:	**1118.57**	**1116.41**	**1116.05**

* ***Post RDM 100-year scour depths are for information only, and are not for bridge foundation design.***

Table 2I

PIER SCOUR: FHWA (HEC 18) CSU Equation

ADOT CONTROLLING

Project:	SR 202 Crossing of the Salt River	**Computed by:**	Dave Schaub
Location:	**Pier 28EB/26WB Scour Depth @ Bridge**	**Date:**	26-Jan-08
Description:	**Without Debris**	**Checked by:**	
	Elevations in 1988 Datum	**Date:**	
	HEC-RAS RS 234		

ADOT Methodology

References:

1) FHWA, *Evaluating Scour At Bridges* (HEC-18), Fourth Edition, May 2001
2) ADOT, *Highway Drainage Design Manual-Hydraulics* , January 2006
3) Tucson, *Standards Manual for Drainage Design & Floodplain Management* , (Revised July 98)
4) SLA Inc., *Final Hydraulics & Scour Analysis Report-Salt River* , July 1997

Pier Input:

Pier Diameter:	8.00	ft
Debris:	0.00	ft on each side
Effective Pier Diameter (a):	8.00	ft

Hydraulic Input:

Storm Event (Years):	Post-100-yr*	Pre-100-yr	SF
Flow, Q (cfs):	169,000	215,000	250,000
W.S.E., (ft):	1171.58	1174.81	1176.73
Depth of Flow, Y_1 (ft):	32.50	35.73	37.65
Average Velocity, V_1 (fps):	12.53	13.89	14.98
Froude Number, Fr_1:	0.45	0.47	0.49

Correction Factors:

Pier Type, K_1 (ADOT Policy):	1.0	***Cylindrical Columns***
Angle of Attack, K_2:	1.0	
Bed Condition, K_3:	1.1	
Armouring, K_4:	1.0	

Particle Size:

D_{52}:	90.5	mm	3.563	inches
D89:	181.0	mm	7.126	inches

Scour Equation: $Y_s/Y_1 = 2*K_1*K_2*K_3*K_4*(a/Y_1)^{0.65}Fr_1^{0.43}$

Local Pier Scour

Post-RDM 100-yr Scour Depth (ft)	**Y_s (Post 100-yr) =**	20.39	
Pre-RDM 100-yr Scour Depth (ft)	**Y_s (Pre 100-yr) =**		21.48
SF Scour Depth (ft)	**Y_s (SF) =**		22.27

General Scour: Zeller Equation

Additional Scour Components

General Scour (GS) (ft) at X-Section	0.00	0.43	0.90
General Scour (GS)(ft) Average, Station 120.5 to 238	0.63	1.44	2.29
General Scour (ft) Selected: larger of 2 above GSs	0.63	1.44	2.29
Long Term Degradation (ft) — Downstream Grade Control Structure	0	0	0
Bend Scour (ft)	0	0	0

Total Scour

Total Post-RDM 100-yr Scour Depth:	21.02		
Total Pre-RDM 100-yr Scour Depth:		22.92	
Total SF Scour Depth:			24.56
Min. Channel Elevation (HEC-RAS)(1988 Datum):	1139.08	1139.08	1139.08
Scour Hole Bottom Elevation:	**1118.06**	**1116.16**	**1114.52**

* ***Post RDM 100-year scour depths are for information only, and are not for bridge foundation design.***

Table 2J

PIER SCOUR: FHWA (HEC 18) CSU Equation

ADOT CONTROLLING

Project:	SR 202 Crossing of the Salt River	**Computed by:**	Dave Schaub
Location:	**Pier 31EB/29WB Scour Depth @ Bridge**	**Date:**	26-Jan-08
Description:	**Without Debris**	**Checked by:**	
	Elevations in 1988 Datum	**Date:**	
	HEC-RAS RS 235		

ADOT Methodology

References:

1) FHWA, *Evaluating Scour At Bridges* (HEC-18), Fourth Edition, May 2001
2) ADOT, *Highway Drainage Design Manual-Hydraulics* , January 2006
3) Tucson, *Standards Manual for Drainage Design & Floodplain Management* , (Revised July 98)
4) SLA Inc., *Final Hydraulics & Scour Analysis Report-Salt River* , July 1997

Pier Input:

Pier Diameter:	8.00	ft
Debris:	0.00	ft on each side
Effective Pier Diameter (a):	8.00	ft

Hydraulic Input:

Storm Event (Years):	Post-100-yr*	Pre-100-yr	SF
Flow, Q (cfs):	169,000	215,000	250,000
W.S.E., (ft):	1172.87	1176.28	1178.39
Depth of Flow, Y_1 (ft):	32.47	35.88	37.99
Average Velocity, V_1 (fps):	11.46	12.74	13.72
Froude Number, Fr_1:	0.40	0.42	0.43

Correction Factors:

Pier Type, K_1 (ADOT Policy):	1.0	***Cylindrical Columns***
Angle of Attack, K_2:	1.0	
Bed Condition, K_3:	1.1	
Armouring, K_4:	1.0	

Particle Size:

D_{52}:	90.5	mm	3.563	inches
D89:	181.0	mm	7.126	inches

Scour Equation: $Y_s/Y_1 = 2*K_1*K_2*K_3*K_4*(a/Y_1)^{0.65}Fr_1^{0.43}$

Local Pier Scour

Post-RDM 100-yr Scour Depth (ft)	**Y_s (Post 100-yr) =**	19.38		
Pre-RDM 100-yr Scour Depth (ft)	**Y_s (Pre 100-yr) =**		20.49	
SF Scour Depth (ft)	**Y_s (SF) =**			21.12

General Scour: Zeller Equation

Additional Scour Components

General Scour (GS) (ft) at X-Section		0.00	0.00	0.00
General Scour (GS)(ft) Average, Station 120.5 to 238		0.63	1.44	2.29
General Scour (ft) Selected: larger of 2 above GSs		0.63	1.44	2.29
Long Term Degradation (ft)	Downstream Grade Control Structure	0	0	0
Bend Scour (ft)		0	0	0

Total Scour

Total Post-RDM 100-yr Scour Depth:	20.01		
Total Pre-RDM 100-yr Scour Depth:		21.94	
Total SF Scour Depth:			23.41
Min. Channel Elevation (HEC-RAS)(1988 Datum):	1140.39	1140.39	1140.39
Scour Hole Bottom Elevation:	**1120.38**	**1118.45**	**1116.98**

* ***Post RDM 100-year scour depths are for information only, and are not for bridge foundation design.***

Table 2K

PIER SCOUR: FHWA (HEC 18) CSU Equation — ***ADOT CONTROLLING***

Project:	SR 202 Crossing of the Salt River	**Computed by:**	Dave Schaub
Location:	**Pier 34EB/32WB Scour Depth @ Bridge**	**Date:**	26-Jan-08
Description:	**Without Debris**	**Checked by:**	
	Elevations in 1988 Datum	**Date:**	
	HEC-RAS RS 236		

ADOT Methodology

References:
1) FHWA, *Evaluating Scour At Bridges* (HEC-18), Fourth Edition, May 2001
2) ADOT, *Highway Drainage Design Manual-Hydraulics* , January 2006
3) Tucson, *Standards Manual for Drainage Design & Floodplain Management* , (Revised July 98)
4) SLA Inc., *Final Hydraulics & Scour Analysis Report-Salt River* , July 1997

Pier Input:

Pier Diameter:	8.00	ft
Debris:	0.00	ft on each side
Effective Pier Diameter (a):	8.00	ft

Hydraulic Input:

Storm Event (Years):	Post-100-yr*	Pre-100-yr	SF
Flow, Q (cfs):	169,000	215,000	250,000
W.S.E., (ft):	1174.04	1177.67	1179.99
Depth of Flow, Y_1 (ft):	32.29	35.92	38.24
Average Velocity, V_1 (fps):	9.87	10.95	11.76
Froude Number, Fr_1:	0.34	0.35	0.37

Correction Factors:

Pier Type, K_1 (ADOT Policy):	1.0	***Cylindrical Columns***
Angle of Attack, K_2:	1.0	
Bed Condition, K_3:	1.1	
Armouring, K_4:	1.0	

Particle Size:

D_{52}:	90.5	mm	3.563	inches
D89:	181.0	mm	7.126	inches

Scour Equation: $Y_s/Y_1 = 2*K_1*K_2*K_3*K_4*(a/Y_1)^{0.65}Fr_1^{0.43}$

Local Pier Scour

Post-RDM 100-yr Scour Depth (ft)	**Y_s (Post 100-yr) =**	18.04	
Pre-RDM 100-yr Scour Depth (ft)	**Y_s (Pre 100-yr) =**		18.96
SF Scour Depth (ft)	**Y_s (SF) =**		19.84

Additional Scour Components

General Scour: Zeller Equation

General Scour (GS) (ft) at X-Section	0.94	1.41	1.81
General Scour (GS)(ft) Average, Station 120.5 to 238	0.63	1.44	2.29
General Scour (ft) Selected: larger of 2 above GSs	0.94	1.44	2.29
Long Term Degradation (ft) — Downstream Grade Control Structure	0	0	0
Bend Scour (ft)	0	0	0

Total Scour

Total Post-RDM 100-yr Scour Depth:	18.98		
Total Pre-RDM 100-yr Scour Depth:		20.40	
Total SF Scour Depth:			22.14
Min. Channel Elevation (HEC-RAS)(1988 Datum):	1141.99	1141.99	1141.99
Scour Hole Bottom Elevation:	**1123.01**	**1121.59**	**1119.85**

* ***Post RDM 100-year scour depths are for information only, and are not for bridge foundation design.***

Table 2L

PIER SCOUR: FHWA (HEC 18) CSU Equation — ***ADOT CONTROLLING***

Project:	SR 202 Crossing of the Salt River	**Computed by:**	Dave Schaub
Location:	**Pier 37EB/35WB Scour Depth @ Bridge**	**Date:**	26-Jan-08
Description:	**Without Debris**	**Checked by:**	
	Elevations in 1988 Datum	**Date:**	
	HEC-RAS RS 237		

ADOT Methodology

References:

1) FHWA, *Evaluating Scour At Bridges* (HEC-18), Fourth Edition, May 2001
2) ADOT, *Highway Drainage Design Manual-Hydraulics* , January 2006
3) Tucson, *Standards Manual for Drainage Design & Floodplain Management* , (Revised July 98)
4) SLA Inc., *Final Hydraulics & Scour Analysis Report-Salt River* , July 1997

Pier Input:

Pier Diameter:	8.00	ft
Debris:	0.00	ft on each side
Effective Pier Diameter (a):	8.00	ft

Hydraulic Input:

Storm Event (Years):	Post-100-yr*	Pre-100-yr	SF
Flow, Q (cfs):	169,000	215,000	250,000
W.S.E., (ft):	1174.92	1178.72	1181.20
Depth of Flow, Y_1 (ft):	30.44	34.24	36.72
Average Velocity, V_1 (fps):	8.07	8.91	9.55
Froude Number, Fr_1:	0.28	0.29	0.30

Correction Factors:

Pier Type, K_1 (ADOT Policy):	1.0	***Cylindrical Columns***
Angle of Attack, K_2:	1.0	
Bed Condition, K_3:	1.1	
Armouring, K_4:	1.0	

Particle Size:

D_{52}:	90.5	mm	3.563	inches
D89:	181.0	mm	7.126	inches

Scour Equation: $Y_s/Y_1 = 2*K_1*K_2*K_3*K_4*(a/Y_1)^{0.65}Fr_1^{0.43}$

Local Pier Scour

Post-RDM 100-yr Scour Depth (ft)	**Y_s (Post 100-yr) =**	16.25	
Pre-RDM 100-yr Scour Depth (ft)	**Y_s (Pre 100-yr) =**		17.19
SF Scour Depth (ft)	**Y_s (SF) =**		17.88

General Scour: Zeller Equation

Additional Scour Components

General Scour (GS) (ft) at X-Section	0.08	0.56	1.28
General Scour (GS)(ft) Average, Station 120.5 to 238	0.63	1.44	2.29
General Scour (ft) Selected: larger of 2 above GSs	0.63	1.44	2.29
Long Term Degradation (ft) — Downstream Grade Control Structure	0	0	0
Bend Scour (ft)	0	0	0

Total Scour

Total Post-RDM 100-yr Scour Depth:	16.88		
Total Pre-RDM 100-yr Scour Depth:		18.64	
Total SF Scour Depth:			20.17
Min. Channel Elevation (HEC-RAS)(1988 Datum):	1144.48	1144.48	1144.48
Scour Hole Bottom Elevation:	**1127.60**	**1125.84**	**1124.31**

* ***Post RDM 100-year scour depths are for information only, and are not for bridge foundation design.***

Table 3
General Scour Calculations
100-Year (169,000 cfs) Post-RDM (Roosevelt Dam Modification)[1]

River Sta	Q Total	Min Ch El	W.S. Elev	Flow Depth	E.G. Slope	Vel Chnl	Flow Area	Top Width	Hydraulic Depth[2]	General Scour[3][4]	Froude # Chl
	(cfs)	(ft)	(ft)	(ft)	(ft/ft)	(ft/s)	(sq ft)	(ft)	(ft)	(ft)	
241.2	169,000	1,150.13	1176.34	26.21	0.000405	6.95	24371.97	1088.74	22.39	0.00	0.25
241.1	169,000	1,150.13	1176.34	26.21	0.000400	6.93	24532.32	1107.67	22.15	0.00	0.25
240.6	169,000	1,150.13	1176.31	26.18	0.000400	6.92	24542.02	1100.19	22.31	0.00	0.25
240.5	169,000	1,150.33	1176.28	25.95	0.000386	6.88	24455.05	1101.17	22.21	0.00	0.25
240.4	169,000	1,149.65	1176.28	26.63	0.000371	6.72	25227.97	1102.4	22.88	0.00	0.24
240.3	169,000	1,149.91	1176.19	26.28	0.000400	6.93	24483.78	1099.38	22.27	0.00	0.25
240.2	169,000	1,150.14	1176.13	25.99	0.000395	7.03	24114.82	1027.58	23.47	0.00	0.25
240.1	169,000	1,150.14	1176.11	25.97	0.000392	7.01	24070.38	1019.89	23.60	0.00	0.25
240	169,000	1,150.14	1176.06	25.92	0.000402	7.15	23651.29	1231.7	19.20	1.51	0.26
239	169,000	1,150.28	1175.37	25.09	0.000627	8.79	19312.30	1034.27	18.67	2.63	0.32
238	169,000	1,147.46	1175.17	27.71	0.000552	8.36	20287.26	1041.99	19.47	2.33	0.3
237	169,000	1,144.48	1174.92	30.44	0.000635	8.07	20971.84	1055.84	19.86	0.08	0.28
236	169,000	1,141.75	1174.04	32.29	0.001039	9.87	17148.22	891.53	19.23	0.94	0.34
235	169,000	1,140.40	1172.87	32.47	0.001833	11.46	14656.62	751.44	19.50	0.00	0.4
234	169,000	1,139.08	1171.58	32.50	0.002516	12.53	13428.65	761.56	17.63	0.00	0.45
233	169,000	1,139.58	1170.36	30.78	0.002704	12.96	13002.60	703.37	18.49	0.00	0.47
232	169,000	1,136.91	1169.7	32.79	0.002155	11.84	14169.31	765.38	18.51	0.00	0.43
231	169,000	1,138.86	1169.18	30.32	0.001683	10.90	15462.98	731.15	21.15	0.00	0.4
230	169,000	1,144.00	1168.28	24.28	0.001946	11.38	14856.80	737.32	20.15	0.00	0.44
229	169,000	1,142.07	1168.22	26.15	0.001123	9.14	18467.35	888.28	20.79	0.00	0.35
228	169,000	1,146.06	1167.81	21.75	0.001044	8.62	19155.02	1033.67	18.53	0.00	0.35
123.55	169,000	1,147.99	1166.68	18.69	0.001647	10.84	15544.08	1007.48	15.43	1.03	0.47
123.075	Bridge										
122.65	169,000	1,147.94	1165.82	17.88	0.001486	10.79	14959.34	977.7	15.30	1.57	0.46
122	169,000	1,147.95	1165.76	17.81	0.001529	10.87	15149.66	985.25	15.38	1.48	0.47
120.5	169,000	1,148.88	1165.5	16.62	0.001951	11.30	15056.17	1178.06	12.78	1.96	0.51

Number of Values	25.00	25.00	25.00		25.00			25.00	25.00	25.00
Average	1,146.18	1,172.29	26.12		9.21			19.65	**0.54**	0.35

Notes: 1. The HEC-RAS model was developed from project contour maps and field surveys to determine bank locations and the ground surface below water.

2. Hydraulic Depth Equation: HD = (Flow Area/Top Width)

3. General Scour Equation: $y_{gs} = y_{max}\{[(0.0685V_m^{0.8})/(y_h^{0.4}S_e^{0.3})]-1\}$

Zeller Equation

Where:
y_{gs} = general scour depth, (ft)
y_{max} = maximum depth of flow, (ft)
V_m = average velocity of flow, (fps)
y_h = hydraulic depth of flow, (ft)
S_e = energy slope, (ft/ft)

4. Minimum General Scour = Average of Scour Depths from River Station 120.5 to 238. GS_{ave} = 0.63

Table 4
General Scour Calculations
100-Year (215,000 cfs) Pre-RDM (Roosevelt Dam Modification)[1]

River Sta	Q Total	Min Ch El	W.S. Elev	Flow Depth	E.G. Slope	Vel Chnl	Flow Area	Top Width	Hydraulic Depth[2]	General Scour[3][4]	Froude # Chl
	(cfs)	(ft)	(ft)	(ft)	(ft/ft)	(ft/s)	(sq ft)	(ft)	(ft)	(ft)	
241.2	220,000	1,150.13	1180.22	30.09	0.000406	7.72	28637.69	1109.94	25.80	0.00	0.26
241.1	220,000	1,150.13	1180.21	30.08	0.000399	7.66	28846.21	1116.28	25.84	0.00	0.26
240.6	220,000	1,150.13	1180.19	30.06	0.000400	7.66	28830.54	1112.09	25.92	0.00	0.26
240.5	220,000	1,150.33	1180.16	29.83	0.000384	7.60	28744.77	1113.97	25.80	0.03	0.25
240.4	220,000	1,149.65	1180.16	30.51	0.000375	7.48	29518.98	1111.41	26.56	0.00	0.25
240.3	220,000	1,149.91	1180.06	30.15	0.000403	7.70	28727.35	1133.8	25.34	0.12	0.26
240.2	220,000	1,150.14	1179.97	29.83	0.000406	7.86	28083.15	1035.37	27.12	0.00	0.26
240.1	220,000	1,150.14	1179.95	29.81	0.000403	7.85	28003.59	1026.47	27.28	0.00	0.26
240	220,000	1,150.14	1179.9	29.76	0.000415	8.00	27491.90	1263.21	21.76	2.70	0.27
239	215,000	1,150.28	1179.17	28.89	0.000614	9.60	22509.06	1068.88	21.06	3.95	0.32
238	215,000	1,147.46	1178.99	31.53	0.000545	9.16	23580.48	1124.89	20.96	4.32	0.3
237	215,000	1,144.48	1178.72	34.24	0.000678	8.91	24124.88	1082.58	22.28	0.56	0.29
236	215,000	1,141.75	1177.67	35.92	0.001137	10.95	19638.42	909.42	21.59	1.41	0.35
235	215,000	1,140.40	1176.28	35.88	0.002033	12.74	16730.26	769.03	21.76	0.00	0.42
234	215,000	1,139.08	1174.81	35.73	0.002752	13.89	15371.51	803.03	19.14	0.43	0.47
233	215,000	1,139.58	1173.41	33.83	0.003008	14.46	14802.02	826.96	17.90	1.53	0.5
232	215,000	1,136.91	1172.68	35.77	0.002439	13.29	16024.42	886.19	18.08	1.29	0.45
231	215,000	1,138.86	1172.13	33.27	0.001903	12.25	17487.51	909.42	19.23	0.68	0.42
230	215,000	1,144.00	1171.17	27.17	0.002116	12.65	16996.08	743.89	22.85	0.00	0.46
229	215,000	1,142.07	1171.17	29.10	0.001219	10.16	21103.16	900	23.45	0.00	0.36
228	215,000	1,146.06	1170.78	24.72	0.001072	9.44	22235.20	1294.4	17.18	0.73	0.35
123.55	215,000	1,147.99	1169.64	21.65	0.001540	11.59	18484.59	1039.44	17.78	1.59	0.46
123.075	Bridge										
122.65	215,000	1,147.94	1168.75	20.81	0.001360	11.48	17861.15	1010.8	17.67	2.26	0.45
122	215,000	1,147.95	1168.7	20.75	0.001400	11.59	18090.06	1184.81	15.27	3.61	0.46
120.5	215,000	1,148.88	1168.51	19.63	0.001709	11.88	18235.28	1300.97	14.02	3.28	0.49
Number of Values		25.00	25.00	25.00		25.00			25.00	25.00	25.00
Average		1,146.18	1,175.74	29.56		10.14			21.67	1.14	0.36

Notes: 1. The HEC-RAS model was developed from project contour maps and field surveys to determine bank locations and the ground surface below water.

Notes: 2. Hydraulic Depth Equation: HD = (Flow Area/Top Width)

3. General Scour Equation: $y_{gs} = y_{max}\{[(0.0685V_m^{0.8})/(y_h^{0.4}S_e^{0.3})]-1\}$

Zeller Equation

Where:
y_{gs} = general scour depth, (ft)
y_{max} = maximum depth of flow, (ft)
V_m = average velocity of flow, (fps)
y_h = hydraulic depth of flow, (ft)
S_e = energy slope, (ft/ft)

4. Minimum General Scour = Average of Scour Depths from River Station 120.5 to 238. GS_{ave} = 1.44

Table 5
General Scour Calculations
Superflood (250,000 cfs) Pre-RDM (Roosevelt Dam Modification)[1]

River Sta	Q Total	Min Ch El	W.S. Elev	Flow Depth	E.G. Slope	Vel Chnl	Flow Area	Top Width	Hydraulic Depth[2]	General Scour[3][4]	Froude # Chl
	(cfs)	(ft)	(ft)	(ft)	(ft/ft)	(ft/s)	(sq ft)	(ft)	(ft)	(ft)	
241.2	250,000	1,150.13	1182.83	32.70	0.000382	7.96	31542.84	1114.78	28.30	0.08	0.26
241.1	250,000	1,150.13	1182.83	32.70	0.000375	7.90	31768.00	1120.61	28.35	0.04	0.25
240.6	250,000	1,150.13	1182.8	32.67	0.000376	7.91	31747.22	1120	28.35	0.05	0.26
240.5	250,000	1,150.33	1182.77	32.44	0.000361	7.82	31666.59	1122.58	28.21	0.21	0.25
240.4	250,000	1,149.65	1182.77	33.12	0.000356	7.75	32448.91	1130.45	28.70	0.00	0.25
240.3	250,000	1,149.91	1182.68	32.77	0.000380	7.95	31626.18	1146.75	27.58	0.44	0.26
240.2	250,000	1,150.14	1182.58	32.44	0.000387	8.15	30789.97	1040.68	29.59	0.00	0.26
240.1	250,000	1,150.14	1182.56	32.42	0.000385	8.14	30685.07	1030.91	29.77	0.00	0.26
240	250,000	1,150.14	1182.5	32.36	0.000397	8.31	30114.48	1278.24	23.56	3.36	0.26
239	250,000	1,150.28	1181.66	31.38	0.000619	10.21	24617.50	1217.57	20.22	6.62	0.33
238	250,000	1,147.46	1181.48	34.02	0.000553	9.76	25747.25	1192.98	21.58	6.02	0.31
237	250,000	1,144.48	1181.2	36.72	0.000749	9.55	26266.84	1156.42	22.71	1.28	0.3
236	250,000	1,141.75	1179.99	38.24	0.001228	11.76	21239.11	920.81	23.07	1.81	0.37
235	250,000	1,140.40	1178.39	37.99	0.002225	13.72	18026.24	799.09	22.56	0.00	0.43
234	250,000	1,139.08	1176.73	37.65	0.003016	14.98	16535.83	819.02	20.19	0.90	0.49
233	250,000	1,139.58	1176.09	36.51	0.002509	13.77	18194.78	979.48	18.58	1.67	0.45
232	250,000	1,136.91	1174.7	37.79	0.002667	14.34	17299.90	906.51	19.08	1.86	0.47
231	250,000	1,138.86	1174.13	35.27	0.002064	13.18	18871.86	982.71	19.20	1.99	0.44
230	250,000	1,144.00	1173.13	29.13	0.002247	13.53	18457.40	773.63	23.86	0.00	0.47
229	250,000	1,142.07	1173.18	31.11	0.001292	10.87	22906.89	1106.99	20.69	0.36	0.37
228	250,000	1,146.06	1172.8	26.74	0.001103	10.01	24339.46	1376.63	17.68	1.54	0.36
123.55	250,000	1,147.99	1171.64	23.65	0.001502	12.15	20510.26	1063.61	19.28	2.06	0.46
123.075	Bridge										
122.65	250,000	1,147.94	1170.71	22.77	0.001313	12.01	19844.82	1116.39	17.78	3.61	0.45
122	250,000	1,147.95	1170.68	22.73	0.001353	12.14	20094.48	1363.16	14.74	5.64	0.46
120.5	250,000	1,148.88	1170.51	21.63	0.001622	12.37	20377.73	1569.96	12.98	5.68	0.48

Number of Values	25.00	25.00	25.00		25.00			25.00	25.00	25.00
Average	1,146.18	1,178.05	31.88		10.65			22.66	**1.81**	0.36

Notes: 1. The HEC-RAS model was developed from project contour maps and field surveys to determine bank locations and the ground surface below water.

2. Hydraulic Depth Equation: HD = (Flow Area/Top Width)

3. General Scour Equation: $y_{gs} = y_{max}\{[(0.0685V_m^{0.8})/(y_h^{0.4}S_e^{0.3})]-1\}$

Zeller Equation

Where:
y_{gs} = general scour depth, (ft)
y_{max} = maximum depth of flow, (ft)
V_m = average velocity of flow, (fps)
y_h = hydraulic depth of flow, (ft)
S_e = energy slope, (ft/ft)

4. Minimum General Scour = Average of Scour Depths from River Station 120.5 to 238. GS_{ave} = 2.29

Table 6
HEC-RAS Report

```
                    HEC-RAS Version 4.0.0 March 2008
                      U.S. Army Corps of Engineers
                     Hydrologic Engineering Center
                           609 Second Street
                           Davis, California

          X     X  XXXXXX    XXXX        XXXX       XX      XXXX
          X     X  X        X    X       X   X     X  X    X
          X     X  X        X            X   X    X    X   X
          XXXXXXX  XXXX     X       XXX  XXXX     XXXXXX    XXXX
          X     X  X        X            X  X     X    X        X
          X     X  X        X    X       X   X    X    X        X
          X     X  XXXXXX    XXXX        X    X   X    X   XXXXX


PROJECT DATA
Project Title: SaltRiver-SR202L-DB
Project File : SaltRiver-SR202L-DB.prj
Run Date and Time: 1/23/2009 9:55:49 AM

Project in English units


PLAN DATA

Plan Title: Plan 01
Plan File : p:\TRANSPORTATION\Kiewit\SR 202 Design Build\Engr\Drainage\HEC-RAS\Salt-River\HEC-RAS_DB_SR202L\SaltRiver-SR202L-DB.p01

          Geometry Title: ExistingRiverSections
          Geometry File : p:\TRANSPORTATION\Kiewit\SR 202 Design Build\Engr\Drainage\HEC-RAS\Salt-River\HEC-RAS_DB_SR202L\SaltRiver-
SR202L-DB.g01

          Flow Title    : SaltRiver-SR202L-DB
          Flow File     : p:\TRANSPORTATION\Kiewit\SR 202 Design Build\Engr\Drainage\HEC-RAS\Salt-River\HEC-RAS_DB_SR202L\SaltRiver-
SR202L-DB.f01

Plan Summary Information:
Number of:  Cross Sections =   25    Multiple Openings  =    0
            Culverts       =    0    Inline Structures  =    0
            Bridges        =    1    Lateral Structures =    0

Computational Information
    Water surface calculation tolerance  =  0.01
    Critical depth calculation tolerance =  0.01
    Maximum number of iterations         =  20
```

Table 6
HEC-RAS Report

Maximum difference tolerance = 0.3
Flow tolerance factor = 0.001

Computation Options
Critical depth computed only where necessary
Conveyance Calculation Method: At breaks in n values only
Friction Slope Method: Average Conveyance
Computational Flow Regime: Subcritical Flow

FLOW DATA

Flow Title: SaltRiver-SR202L-DB
Flow File : p:\TRANSPORTATION\Kiewit\SR 202 Design Build\Engr\Drainage\HEC-RAS\Salt-River\HEC-RAS_DB_SR202L\SaltRiver-SR202L-DB.f01

Flow Data (cfs)

River	Reach	RS	Pre-RDM-5yr	Pre-RDM-10yr	Pre-RDM-100yr	Pre-RDM-Superflood	Post-RDM-100yr	Post-RDM-500yr
Salt River	SR 202	241.2	40000	95300	220000	250000	169000	243000
Salt River	SR 202	239	40000	93000	215000	250000	169000	243000

Boundary Conditions

River	Reach	Profile	Upstream	Downstream
Salt River	SR 202	Pre-RDM-5yr		Known WS = 1154.5
Salt River	SR 202	Pre-RDM-10yr		Known WS = 1159.37
Salt River	SR 202	Pre-RDM-100yr		Known WS = 1168.51
Salt River	SR 202	Pre-RDM-Superflood		Known WS = 1170.51
Salt River	SR 202	Post-RDM-100yr		Known WS = 1165.5
Salt River	SR 202	Post-RDM-500yr		Known WS = 1170.51

GEOMETRY DATA

Geometry Title: ExistingRiverSections
Geometry File : p:\TRANSPORTATION\Kiewit\SR 202 Design Build\Engr\Drainage\HEC-RAS\Salt-River\HEC-RAS_DB_SR202L\SaltRiver-SR202L-DB.g01

CROSS SECTION

Table 6
HEC-RAS Report

RIVER: Salt River
REACH: SR 202 RS: 241.2

INPUT
Description:
Station Elevation Data num= 93

Sta	Elev	Sta	Elev	Sta	Elev	Sta	Elev	Sta	Elev
0	1183.2	1.27	1183.27	1.87	1183.39	8.68	1185.59	23.17	1185.21
35.04	1185.45	54.48	1185.27	81.86	1185.74	87.04	1185.75	95.86	1178.61
98.4	1178.36	111.67	1177.22	119.63	1170.53	128.07	1162.13	133.24	1160.32
136.34	1159.98	145.06	1159.22	151.43	1158.56	157.53	1158.17	163.03	1158.14
168.95	1157.61	180.41	1156.88	182.44	1156.87	185.44	1156.47	191.92	1156.52
197.36	1156.69	199.84	1156.19	205.71	1156.03	209.28	1156.09	215.97	1155.65
219.86	1155.19	225.38	1154.96	232.76	1154.25	243.4	1153.69	249.33	1153.56
266	1153.75	272.58	1153.57	293.07	1153.23	296.04	1153.69	298.72	1152.97
305.2	1152.95	312.31	1152.74	313.71	1153.2	315.46	1152.42	319.29	1152.3
346.24	1152.33	350.07	1152.27	377.98	1152.52	450.95	1152.82	569.29	1152.54
618.45	1152.23	624.57	1152.11	659.39	1152	664.25	1151.88	703.7	1151.85
724.93	1151.57	803.06	1151.5	807.2	1151.38	833.16	1151.52	876.88	1151.44
884.26	1152.86	890.71	1150.13	911.91	1152.45	914.5	1152.7	916.93	1152.62
923.73	1152.85	927.97	1152.75	934.42	1152.88	955.95	1153.83	959.17	1153.82
966.07	1153.47	975.66	1153.46	1005.8	1153.7	1009.56	1153.93	1016.43	1154.18
1020.04	1154.19	1020.84	1154.41	1023.74	1154.42	1035.28	1154.79	1042.31	1154.8
1067.68	1153.96	1115.95	1154.17	1151.25	1154.9	1163.01	1155.7	1175.17	1165
1184.81	1172.14	1200.12	1174.13	1200.15	1174.18	1202.41	1177.93	1206.25	1184.16
1213.28	1194.07	1214.25	1195.43	1228.62	1200.15				

Manning's n Values num= 3

Sta	n Val	Sta	n Val	Sta	n Val
0	.02	145.06	.035	1163.01	.02

Bank Sta: Left	Right	Lengths: Left	Channel	Right	Coeff Contr.	Expan.
145.06	1163.01	30	29.3	29	.1	.3

Ineffective Flow num= 1

Sta L	Sta R	Elev	Permanent
0	87.04	1186	F

CROSS SECTION OUTPUT Profile #Pre-RDM-100yr

E.G. Elev (ft)	1181.13	Element	Left OB	Channel	Right OB
Vel Head (ft)	0.92	Wt. n-Val.	0.020	0.035	0.020
W.S. Elev (ft)	1180.22	Reach Len. (ft)	30.00	29.30	29.00
Crit W.S. (ft)	1164.41	Flow Area (sq ft)	546.02	27618.22	473.45
E.G. Slope (ft/ft)	0.000406	Area (sq ft)	546.02	27618.22	473.45
Q Total (cfs)	220000.00	Flow (cfs)	3642.58	213178.10	3179.26
Top Width (ft)	1109.94	Top Width (ft)	51.18	1017.95	40.81
Vel Total (ft/s)	7.68	Avg. Vel. (ft/s)	6.67	7.72	6.72
Max Chl Dpth (ft)	30.09	Hydr. Depth (ft)	10.67	27.13	11.60
Conv. Total (cfs)	10914070.0	Conv. (cfs)	180706.3	10575640.0	157721.3
Length Wtd. (ft)	29.31	Wetted Per. (ft)	58.08	1019.58	49.87

Table 6
HEC-RAS Report

Min Ch El (ft)	1150.13	Shear (lb/sq ft)	0.24	0.69	0.24
Alpha	1.00	Stream Power (lb/ft s)	1.59	5.30	1.62
Frctn Loss (ft)	0.01	Cum Volume (acre-ft)	67.36	2852.83	166.84
C & E Loss (ft)	0.00	Cum SA (acres)	6.37	108.99	28.26

CROSS SECTION OUTPUT Profile #Pre-RDM-Superflo

E.G. Elev (ft)	1183.80	Element	Left OB	Channel	Right OB
Vel Head (ft)	0.98	Wt. n-Val.	0.020	0.035	0.020
W.S. Elev (ft)	1182.83	Reach Len. (ft)	30.00	29.30	29.00
Crit W.S. (ft)	1165.43	Flow Area (sq ft)	683.91	30276.79	582.14
E.G. Slope (ft/ft)	0.000382	Area (sq ft)	683.91	30276.79	582.14
Q Total (cfs)	250000.00	Flow (cfs)	4909.03	240910.70	4180.30
Top Width (ft)	1114.78	Top Width (ft)	54.41	1017.95	42.42
Vel Total (ft/s)	7.93	Avg. Vel. (ft/s)	7.18	7.96	7.18
Max Chl Dpth (ft)	32.70	Hydr. Depth (ft)	12.57	29.74	13.72
Conv. Total (cfs)	12791290.0	Conv. (cfs)	251171.3	12326230.0	213885.8
Length Wtd. (ft)	29.31	Wetted Per. (ft)	62.23	1019.58	52.93
Min Ch El (ft)	1150.13	Shear (lb/sq ft)	0.26	0.71	0.26
Alpha	1.00	Stream Power (lb/ft s)	1.88	5.63	1.88
Frctn Loss (ft)	0.01	Cum Volume (acre-ft)	86.71	3100.18	233.72
C & E Loss (ft)	0.00	Cum SA (acres)	13.26	109.43	31.44

CROSS SECTION OUTPUT Profile #Post-RDM-100yr

E.G. Elev (ft)	1177.09	Element	Left OB	Channel	Right OB
Vel Head (ft)	0.75	Wt. n-Val.	0.020	0.035	0.020
W.S. Elev (ft)	1176.34	Reach Len. (ft)	30.00	29.30	29.00
Crit W.S. (ft)	1162.62	Flow Area (sq ft)	378.90	23673.17	319.91
E.G. Slope (ft/ft)	0.000405	Area (sq ft)	378.90	23673.17	319.91
Q Total (cfs)	169000.00	Flow (cfs)	2611.46	164628.40	1760.15
Top Width (ft)	1088.74	Top Width (ft)	32.34	1017.95	38.44
Vel Total (ft/s)	6.93	Avg. Vel. (ft/s)	6.89	6.95	5.50
Max Chl Dpth (ft)	26.21	Hydr. Depth (ft)	11.71	23.26	8.32
Conv. Total (cfs)	8396979.0	Conv. (cfs)	129753.7	8179770.0	87455.0
Length Wtd. (ft)	29.31	Wetted Per. (ft)	38.29	1019.58	45.32
Min Ch El (ft)	1150.13	Shear (lb/sq ft)	0.25	0.59	0.18
Alpha	1.00	Stream Power (lb/ft s)	1.72	4.08	0.98
Frctn Loss (ft)	0.01	Cum Volume (acre-ft)	49.43	2484.35	81.30
C & E Loss (ft)	0.00	Cum SA (acres)	4.80	108.99	19.90

CROSS SECTION

RIVER: Salt River
REACH: SR 202 RS: 241.1

Table 6
HEC-RAS Report

INPUT
Description:
Station Elevation Data num= 95

Sta	Elev	Sta	Elev	Sta	Elev	Sta	Elev	Sta	Elev
0	1186.3	2.66	1186.24	7.84	1186.09	21.58	1186.14	29.19	1185.87
33.17	1185.93	49.68	1185.76	54.85	1185.82	57.88	1185.71	69.3	1185.69
83.45	1185.75	87.99	1179.55	93.69	1175.98	93.71	1175.96	94.06	1175.75
99.11	1175.41	109.17	1174.56	110.23	1173.65	113.87	1170.77	115.14	1169.67
122.02	1164.08	124.54	1162.08	130.62	1160.31	133.16	1159.5	134.14	1159.33
139.33	1159.23	142.17	1159.02	152.86	1158.93	156.42	1159.04	167.7	1158.14
170.16	1157.87	177.77	1157.29	178.32	1157.32	183.81	1156.5	189.08	1156.29
190.02	1156.2	194.26	1156.19	196.42	1155.98	201.75	1155.65	202.48	1155.54
215.34	1154.46	223.98	1153.96	234.54	1153.66	246.54	1153.53	248.39	1153.45
260.92	1153.33	267.49	1153.15	271.14	1153.61	274.41	1153.31	287.05	1153.14
288.69	1153.54	291.98	1152.55	325.64	1152.43	352.41	1152.54	389.66	1152.72
437.6	1152.79	439.78	1152.7	499.62	1152.57	548.43	1152.35	556.72	1151.8
561.13	1151.57	740.14	1151.59	763.58	1152.06	764.63	1152	800.49	1151.76
802.69	1151.66	806.28	1151.61	833.33	1151.83	882.22	1151.52	890.38	1150.13
912.31	1152.45	918.22	1152.79	954.31	1154.38	961.11	1154.37	963.91	1154.22
982.91	1154.21	1025.34	1154.56	1060.23	1153.4	1079.05	1153.48	1148.77	1154.9
1161.41	1155.7	1176.64	1166.56	1184.35	1172.14	1200	1175.3	1206.9	1184.27
1209.04	1182.53	1210.01	1188.43	1219.15	1200.49	1225.73	1200.82	1227.89	1200.65
1230.07	1200.78	1235.3	1200.36	1252.76	1200.62	1270.33	1200.75	1276.7	1200.71

Manning's n Values num= 3

Sta	n Val	Sta	n Val	Sta	n Val
0	.02	139.33	.035	1161.41	.02

Bank Sta: Left	Right	Lengths: Left	Channel	Right	Coeff Contr.	Expan.
139.33	1161.41	60	59.8	59	.1	.3

CROSS SECTION OUTPUT Profile #Pre-RDM-100yr

E.G. Elev (ft)	1181.12	Element	Left OB	Channel	Right OB
Vel Head (ft)	0.90	Wt. n-Val.	0.020	0.035	0.020
W.S. Elev (ft)	1180.21	Reach Len. (ft)	60.00	59.80	59.00
Crit W.S. (ft)		Flow Area (sq ft)	571.21	27789.71	485.30
E.G. Slope (ft/ft)	0.000399	Area (sq ft)	571.21	27789.71	485.30
Q Total (cfs)	220000.00	Flow (cfs)	3887.11	212854.30	3258.54
Top Width (ft)	1116.28	Top Width (ft)	51.83	1022.08	42.37
Vel Total (ft/s)	7.63	Avg. Vel. (ft/s)	6.81	7.66	6.71
Max Chl Dpth (ft)	30.08	Hydr. Depth (ft)	11.02	27.19	11.45
Conv. Total (cfs)	11019680.0	Conv. (cfs)	194703.1	10661760.0	163218.5
Length Wtd. (ft)	59.79	Wetted Per. (ft)	58.13	1022.96	50.39
Min Ch El (ft)	1150.13	Shear (lb/sq ft)	0.24	0.68	0.24
Alpha	1.00	Stream Power (lb/ft s)	1.66	5.18	1.61
Frctn Loss (ft)	0.02	Cum Volume (acre-ft)	66.98	2834.19	166.52
C & E Loss (ft)	0.00	Cum SA (acres)	6.34	108.30	28.23

Table 6
HEC-RAS Report

CROSS SECTION OUTPUT Profile #Pre-RDM-Superflo

E.G. Elev (ft)	1183.79	Element	Left OB	Channel	Right OB
Vel Head (ft)	0.96	Wt. n-Val.	0.020	0.035	0.020
W.S. Elev (ft)	1182.83	Reach Len. (ft)	60.00	59.80	59.00
Crit W.S. (ft)		Flow Area (sq ft)	709.12	30460.19	598.69
E.G. Slope (ft/ft)	0.000375	Area (sq ft)	709.12	30460.19	598.69
Q Total (cfs)	250000.00	Flow (cfs)	5212.78	240490.00	4297.24
Top Width (ft)	1120.61	Top Width (ft)	53.74	1022.08	44.79
Vel Total (ft/s)	7.87	Avg. Vel. (ft/s)	7.35	7.90	7.18
Max Chl Dpth (ft)	32.70	Hydr. Depth (ft)	13.20	29.80	13.37
Conv. Total (cfs)	12914750.0	Conv. (cfs)	269287.1	12423480.0	221991.1
Length Wtd. (ft)	59.79	Wetted Per. (ft)	61.36	1022.96	54.45
Min Ch El (ft)	1150.13	Shear (lb/sq ft)	0.27	0.70	0.26
Alpha	1.00	Stream Power (lb/ft s)	1.99	5.50	1.85
Frctn Loss (ft)	0.02	Cum Volume (acre-ft)	86.23	3079.75	233.33
C & E Loss (ft)	0.00	Cum SA (acres)	13.22	108.74	31.41

Warning: Divided flow computed for this cross-section.

CROSS SECTION OUTPUT Profile #Post-RDM-100yr

E.G. Elev (ft)	1177.07	Element	Left OB	Channel	Right OB
Vel Head (ft)	0.74	Wt. n-Val.	0.020	0.035	0.020
W.S. Elev (ft)	1176.34	Reach Len. (ft)	60.00	59.80	59.00
Crit W.S. (ft)		Flow Area (sq ft)	380.17	23825.40	326.75
E.G. Slope (ft/ft)	0.000400	Area (sq ft)	380.17	23825.40	326.75
Q Total (cfs)	169000.00	Flow (cfs)	2149.42	165042.60	1807.99
Top Width (ft)	1107.67	Top Width (ft)	46.21	1022.08	39.39
Vel Total (ft/s)	6.89	Avg. Vel. (ft/s)	5.65	6.93	5.53
Max Chl Dpth (ft)	26.20	Hydr. Depth (ft)	8.23	23.31	8.30
Conv. Total (cfs)	8447210.0	Conv. (cfs)	107435.7	8249405.0	90369.8
Length Wtd. (ft)	59.79	Wetted Per. (ft)	51.25	1022.96	45.49
Min Ch El (ft)	1150.13	Shear (lb/sq ft)	0.19	0.58	0.18
Alpha	1.00	Stream Power (lb/ft s)	1.05	4.03	0.99
Frctn Loss (ft)	0.02	Cum Volume (acre-ft)	49.17	2468.38	81.08
C & E Loss (ft)	0.00	Cum SA (acres)	4.77	108.30	19.88

CROSS SECTION

RIVER: Salt River
REACH: SR 202 RS: 240.6

INPUT
Description:
Station Elevation Data num= 96

Sta	Elev	Sta	Elev	Sta	Elev	Sta	Elev	Sta	Elev

0	1193.7	10.24	1193.64	56.17	1192.93	57.7	1187.55	58.34	1187.69
61.22	1187.04	82.45	1185.86	88.21	1180.95	88.22	1180.94	89.96	1179.45
96.55	1174.08	110.49	1173.3	115.11	1169.5	122.82	1163.3	127.45	1161.7
132.96	1161.87	137.92	1160.56	144.35	1160.46	150.24	1160.2	163.02	1160.28
165.02	1160.22	168.11	1159.86	170.88	1159.38	174	1159.03	187.48	1158.21
194.49	1157.03	197.55	1156.93	202.61	1156.26	205.41	1156.13	227.17	1154.31
227.81	1154.37	230.04	1154.32	236.78	1154.79	239.7	1154.42	243.07	1154.32
252.19	1154.22	265.69	1153.64	278.89	1153.26	280.15	1153.02	281.71	1153.04
310.98	1152.44	321.66	1152.47	329.64	1151.57	511.87	1152.19	516.47	1152.1
528.8	1152.22	586.26	1152.4	604.01	1152.33	617	1152.1	635.31	1152.07
658.91	1152.35	670.29	1152.4	703.66	1152.23	725.7	1153.22	732.82	1153.38
744.03	1153.46	751.83	1153.43	757.59	1153.27	759.43	1153.12	771.29	1153.37
774.66	1153.34	780.27	1152.99	789.14	1152.93	797.82	1152.55	805.53	1152.57
812.03	1152.35	842.11	1152.46	845.73	1152.57	850.48	1152.48	852.28	1152.51
860.24	1152.21	873.94	1151.93	890.82	1150.75	897.3	1150.13	919.48	1152.12
946.26	1152.41	947.07	1152.31	949.15	1152.4	951.14	1152.58	961.27	1152.7
972.8	1152.57	977.59	1152.58	1022.32	1152.23	1031.54	1152.08	1130.3	1154.49
1152.32	1154.9	1165.36	1155.53	1176.99	1164.71	1186.26	1172.14	1208.76	1184.27
1213.26	1187.22	1214.41	1187.88	1214.96	1199	1215.03	1200.43	1227.98	1201.26
1263.7	1200.76								

Manning's n Values num= 3

Sta	n Val	Sta	n Val	Sta	n Val
0	.02	137.92	.035	1165.36	.02

Bank Sta: Left	Right	Lengths: Left	Channel	Right	Coeff Contr.	Expan.
137.92	1165.36	59	58.66	58	.1	.3

CROSS SECTION OUTPUT Profile #Pre-RDM-100yr

E.G. Elev (ft)	1181.09	Element	Left OB	Channel	Right OB
Vel Head (ft)	0.91	Wt. n-Val.	0.020	0.035	0.020
W.S. Elev (ft)	1180.19	Reach Len. (ft)	59.00	58.66	58.00
Crit W.S. (ft)		Flow Area (sq ft)	537.79	27890.23	402.52
E.G. Slope (ft/ft)	0.000400	Area (sq ft)	537.79	27890.23	402.52
Q Total (cfs)	220000.00	Flow (cfs)	3652.18	213718.80	2629.06
Top Width (ft)	1112.09	Top Width (ft)	48.82	1027.44	35.83
Vel Total (ft/s)	7.63	Avg. Vel. (ft/s)	6.79	7.66	6.53
Max Chl Dpth (ft)	30.06	Hydr. Depth (ft)	11.02	27.15	11.23
Conv. Total (cfs)	11003590.0	Conv. (cfs)	182668.4	10689430.0	131495.9
Length Wtd. (ft)	58.67	Wetted Per. (ft)	55.02	1028.23	43.66
Min Ch El (ft)	1150.13	Shear (lb/sq ft)	0.24	0.68	0.23
Alpha	1.00	Stream Power (lb/ft s)	1.66	5.19	1.50
Frctn Loss (ft)	0.02	Cum Volume (acre-ft)	66.22	2795.97	165.92
C & E Loss (ft)	0.00	Cum SA (acres)	6.27	106.89	28.18

CROSS SECTION OUTPUT Profile #Pre-RDM-Superflo

E.G. Elev (ft)	1183.77	Element	Left OB	Channel	Right OB

Vel Head (ft)	0.96	Wt. n-Val.	0.020	0.035	0.020
W.S. Elev (ft)	1182.80	Reach Len. (ft)	59.00	58.66	58.00
Crit W.S. (ft)		Flow Area (sq ft)	669.38	30575.35	502.49
E.G. Slope (ft/ft)	0.000376	Area (sq ft)	669.38	30575.35	502.49
Q Total (cfs)	250000.00	Flow (cfs)	4869.44	241719.40	3411.20
Top Width (ft)	1120.00	Top Width (ft)	51.88	1027.44	40.68
Vel Total (ft/s)	7.87	Avg. Vel. (ft/s)	7.27	7.91	6.79
Max Chl Dpth (ft)	32.67	Hydr. Depth (ft)	12.90	29.76	12.35
Conv. Total (cfs)	12885910.0	Conv. (cfs)	250988.6	12459100.0	175825.5
Length Wtd. (ft)	58.67	Wetted Per. (ft)	59.04	1028.23	49.16
Min Ch El (ft)	1150.13	Shear (lb/sq ft)	0.27	0.70	0.24
Alpha	1.00	Stream Power (lb/ft s)	1.94	5.52	1.63
Frctn Loss (ft)	0.02	Cum Volume (acre-ft)	85.28	3037.85	232.58
C & E Loss (ft)	0.00	Cum SA (acres)	13.15	107.33	31.35

CROSS SECTION OUTPUT Profile #Post-RDM-100yr

E.G. Elev (ft)	1177.05	Element	Left OB	Channel	Right OB
Vel Head (ft)	0.74	Wt. n-Val.	0.020	0.035	0.020
W.S. Elev (ft)	1176.31	Reach Len. (ft)	59.00	58.66	58.00
Crit W.S. (ft)		Flow Area (sq ft)	357.58	23906.89	277.56
E.G. Slope (ft/ft)	0.000400	Area (sq ft)	357.58	23906.89	277.56
Q Total (cfs)	169000.00	Flow (cfs)	2001.54	165373.30	1625.14
Top Width (ft)	1100.19	Top Width (ft)	44.11	1027.44	28.64
Vel Total (ft/s)	6.89	Avg. Vel. (ft/s)	5.60	6.92	5.86
Max Chl Dpth (ft)	26.18	Hydr. Depth (ft)	8.11	23.27	9.69
Conv. Total (cfs)	8449429.0	Conv. (cfs)	100070.2	8268108.0	81251.6
Length Wtd. (ft)	58.67	Wetted Per. (ft)	48.91	1028.23	35.49
Min Ch El (ft)	1150.13	Shear (lb/sq ft)	0.18	0.58	0.20
Alpha	1.00	Stream Power (lb/ft s)	1.02	4.02	1.14
Frctn Loss (ft)	0.02	Cum Volume (acre-ft)	48.66	2435.61	80.68
C & E Loss (ft)	0.00	Cum SA (acres)	4.71	106.89	19.83

CROSS SECTION

RIVER: Salt River
REACH: SR 202 RS: 240.5

INPUT
Description:
Station Elevation Data num= 95

Sta	Elev	Sta	Elev	Sta	Elev	Sta	Elev	Sta	Elev
0	1186.24	2.22	1186.22	7.84	1186.25	12.65	1186.23	16.49	1186.28
25.97	1186.68	41.94	1186.79	65.07	1185.96	76.3	1185.49	80.01	1185.35
80.06	1185.348	80.91	1185.32	91.6	1177.77	96.97	1174.05	99.62	1174.11
106.64	1174.31	114.17	1174.45	120.35	1167.73	125.13	1162.31	135.64	1162.26
167.2	1162.22	179.6	1159.96	196.36	1156.85	207.05	1156.03	235.7	1154.88

245.8	1154.73	259.81	1154.49	262.17	1154.11	283.22	1153.75	299.05	1153.81
304.31	1153.61	336.29	1152.73	354.49	1152.66	357.4	1152.62	358.88	1152.64
363.37	1152.78	364.98	1152.8	381.38	1152.5	384.77	1152.49	386.43	1152.44
393.9	1152.43	399.72	1152.39	405.83	1152.23	454.75	1152.25	456.53	1152.23
475.25	1152.28	477.72	1152.3	479.83	1152.37	481.07	1152.39	515.73	1152.47
626.31	1153.08	628.89	1153.07	630.77	1153.04	643.09	1153.11	649.64	1153.21
663.71	1153.28	673.15	1153.07	691.3	1152.71	692.85	1152.67	696.32	1152.63
718.15	1152.64	720.15	1152.63	742.28	1153.1	748.58	1153.04	774.69	1152.97
791.64	1152.08	804.18	1151.99	818.79	1151.41	841.25	1151.33	853.06	1151.28
875.7	1150.49	884.84	1150.33	910.89	1150.41	918.29	1150.47	942.3	1150.54
950.32	1150.92	959.45	1150.86	959.68	1150.88	960.45	1150.89	986.94	1150.66
1032.71	1151.63	1152.26	1154.9	1167.78	1155.53	1176.23	1162.72	1186.08	1171.22
1187.14	1172.14	1207.89	1183.19	1208.79	1184.27	1218.69	1187.28	1221.75	1196.63
1225.57	1197.83	1225.63	1200.14	1228.22	1200.05	1232.04	1200.06	1251	1199.65

Manning's n Values num= 3

Sta	n Val	Sta	n Val	Sta	n Val
0	.02	207.05	.035	1167.78	.02

Bank Sta: Left	Right	Lengths: Left	Channel	Right	Coeff Contr.	Expan.
207.05	1167.78	85	86.73	86	.1	.3

CROSS SECTION OUTPUT Profile #Pre-RDM-100yr

			Left OB	Channel	Right OB
E.G. Elev (ft)	1181.07	Element			
Vel Head (ft)	0.91	Wt. n-Val.	0.020	0.035	0.020
W.S. Elev (ft)	1180.16	Reach Len. (ft)	85.00	86.73	86.00
Crit W.S. (ft)		Flow Area (sq ft)	1864.26	26503.61	376.90
E.G. Slope (ft/ft)	0.000384	Area (sq ft)	1864.26	26503.61	376.90
Q Total (cfs)	220000.00	Flow (cfs)	16305.48	201345.00	2349.46
Top Width (ft)	1113.97	Top Width (ft)	118.83	960.73	34.41
Vel Total (ft/s)	7.65	Avg. Vel. (ft/s)	8.75	7.60	6.23
Max Chl Dpth (ft)	29.83	Hydr. Depth (ft)	15.69	27.59	10.95
Conv. Total (cfs)	11223110.0	Conv. (cfs)	831809.8	10271440.0	119855.8
Length Wtd. (ft)	86.65	Wetted Per. (ft)	126.67	960.96	42.56
Min Ch El (ft)	1150.33	Shear (lb/sq ft)	0.35	0.66	0.21
Alpha	1.01	Stream Power (lb/ft s)	3.09	5.03	1.32
Frctn Loss (ft)	0.03	Cum Volume (acre-ft)	64.59	2759.35	165.40
C & E Loss (ft)	0.02	Cum SA (acres)	6.15	105.55	28.13

CROSS SECTION OUTPUT Profile #Pre-RDM-Superflo

			Left OB	Channel	Right OB
E.G. Elev (ft)	1183.74	Element			
Vel Head (ft)	0.98	Wt. n-Val.	0.020	0.035	0.020
W.S. Elev (ft)	1182.77	Reach Len. (ft)	85.00	86.73	86.00
Crit W.S. (ft)		Flow Area (sq ft)	2179.57	29013.80	473.22
E.G. Slope (ft/ft)	0.000361	Area (sq ft)	2179.57	29013.80	473.22
Q Total (cfs)	250000.00	Flow (cfs)	20029.54	226904.50	3065.93
Top Width (ft)	1122.58	Top Width (ft)	122.53	960.73	39.32

Table 6
HEC-RAS Report

Vel Total (ft/s)	7.89	Avg. Vel. (ft/s)	9.19	7.82	6.48
Max Chl Dpth (ft)	32.44	Hydr. Depth (ft)	17.79	30.20	12.04
Conv. Total (cfs)	13159150.0	Conv. (cfs)	1054287.0	11943480.0	161380.2
Length Wtd. (ft)	86.64	Wetted Per. (ft)	131.20	960.96	48.12
Min Ch El (ft)	1150.33	Shear (lb/sq ft)	0.37	0.68	0.22
Alpha	1.01	Stream Power (lb/ft s)	3.44	5.32	1.44
Frctn Loss (ft)	0.03	Cum Volume (acre-ft)	83.35	2997.73	231.93
C & E Loss (ft)	0.02	Cum SA (acres)	13.03	105.99	31.30

CROSS SECTION OUTPUT Profile #Post-RDM-100yr

			Left OB	Channel	Right OB
E.G. Elev (ft)	1177.03	Element			
Vel Head (ft)	0.74	Wt. n-Val.	0.020	0.035	0.020
W.S. Elev (ft)	1176.28	Reach Len. (ft)	85.00	86.73	86.00
Crit W.S. (ft)		Flow Area (sq ft)	1414.68	22782.66	257.71
E.G. Slope (ft/ft)	0.000386	Area (sq ft)	1414.68	22782.66	257.71
Q Total (cfs)	169000.00	Flow (cfs)	10702.71	156854.70	1442.61
Top Width (ft)	1101.17	Top Width (ft)	113.30	960.73	27.14
Vel Total (ft/s)	6.91	Avg. Vel. (ft/s)	7.57	6.88	5.60
Max Chl Dpth (ft)	25.95	Hydr. Depth (ft)	12.49	23.71	9.50
Conv. Total (cfs)	8600423.0	Conv. (cfs)	544662.0	7982346.0	73414.7
Length Wtd. (ft)	86.66	Wetted Per. (ft)	119.92	960.96	34.32
Min Ch El (ft)	1150.33	Shear (lb/sq ft)	0.28	0.57	0.18
Alpha	1.00	Stream Power (lb/ft s)	2.15	3.93	1.01
Frctn Loss (ft)	0.03	Cum Volume (acre-ft)	47.46	2404.18	80.32
C & E Loss (ft)	0.01	Cum SA (acres)	4.60	105.55	19.79

CROSS SECTION

RIVER: Salt River
REACH: SR 202 RS: 240.4

INPUT
Description:
Station Elevation Data num= 92

Sta	Elev	Sta	Elev	Sta	Elev	Sta	Elev	Sta	Elev
0	1186.1	1.11	1186.15	6.11	1186.34	10.94	1186.69	24.08	1186.14
24.68	1186.13	40.04	1186.29	41.01	1186.34	42.18	1186.36	43.75	1186.38
44.76	1186.37	51.56	1181.69	58.05	1181.48	64.54	1181.27	65.12	1180.77
65.75	1180.2	80.74	1166.38	86.54	1161.3	88.67	1160.9	89.11	1160.8
91.31	1160.47	100.3	1160.31	119.15	1159.52	124.56	1159.41	126.52	1159.29
127.28	1159.26	129.36	1159.1	134.45	1159.04	136.97	1158.97	138.76	1158.89
140.74	1158.7	143.02	1158.5	144.92	1158.28	160.44	1157.64	161.43	1157.61
161.85	1157.59	181.01	1157.13	186.36	1156.99	194.32	1156.76	196.13	1156.74
200.51	1155.98	201.46	1155.83	216.74	1155.26	307.98	1152.74	311.14	1152.73
312.27	1152.76	321.41	1152.71	332.14	1152.7	346.71	1152.72	357.03	1152.7
408.54	1152.76	414.71	1152.7	418.96	1152.68	423.94	1152.64	426.07	1152.61

Table 6
HEC-RAS Report

452.79	1152.09	567.91	1151.73	625.12	1151.13	631.59	1151	670.06	1150.66
962.82	1149.65	1012.37	1153.38	1035.87	1153.94	1081.97	1154.96	1093.59	1155.09
1110.42	1155.24	1117.49	1155.28	1127.33	1155.4	1136.01	1155.5	1140.06	1155.54
1141.52	1156.79	1146.21	1160.9	1158.01	1170.73	1161.65	1171.73	1161.66	1171.733
1168.58	1173.62	1169.42	1173.87	1182.51	1184.45	1190.2	1184.48	1191.9	1184.5
1195.7	1184.42	1196.7	1199.29	1197.32	1207.99	1201.2	1207.69	1206.45	1207.52
1208.64	1207.63	1212.92	1207.41	1216.61	1207.34	1217.91	1207.36	1225.8	1207.18
1228.26	1207.1	1232.4	1207.02						

Manning's n Values num= 3

Sta	n Val	Sta	n Val	Sta	n Val
0	.02	91.31	.035	1140.06	.02

Bank Sta: Left	Right	Lengths: Left	Channel	Right	Coeff Contr.	Expan.
91.31	1140.06	105	106.05	106	.1	.3

CROSS SECTION OUTPUT Profile #Pre-RDM-100yr

			Left OB	Channel	Right OB
E.G. Elev (ft)	1181.02	Element			
Vel Head (ft)	0.86	Wt. n-Val.	0.020	0.035	0.020
W.S. Elev (ft)	1180.16	Reach Len. (ft)	105.00	106.05	106.00
Crit W.S. (ft)		Flow Area (sq ft)	289.64	28810.90	418.44
E.G. Slope (ft/ft)	0.000375	Area (sq ft)	289.64	28810.90	418.44
Q Total (cfs)	220000.00	Flow (cfs)	1777.22	215574.80	2647.96
Top Width (ft)	1111.41	Top Width (ft)	25.51	1048.75	37.14
Vel Total (ft/s)	7.45	Avg. Vel. (ft/s)	6.14	7.48	6.33
Max Chl Dpth (ft)	30.51	Hydr. Depth (ft)	11.35	27.47	11.27
Conv. Total (cfs)	11362090.0	Conv. (cfs)	91786.3	11133550.0	136756.2
Length Wtd. (ft)	106.04	Wetted Per. (ft)	32.88	1049.14	45.35
Min Ch El (ft)	1149.65	Shear (lb/sq ft)	0.21	0.64	0.22
Alpha	1.00	Stream Power (lb/ft s)	1.27	4.81	1.37
Frctn Loss (ft)	0.04	Cum Volume (acre-ft)	62.49	2704.28	164.61
C & E Loss (ft)	0.01	Cum SA (acres)	6.01	103.55	28.06

CROSS SECTION OUTPUT Profile #Pre-RDM-Superflo

			Left OB	Channel	Right OB
E.G. Elev (ft)	1183.70	Element			
Vel Head (ft)	0.93	Wt. n-Val.	0.020	0.035	0.020
W.S. Elev (ft)	1182.77	Reach Len. (ft)	105.00	106.05	106.00
Crit W.S. (ft)		Flow Area (sq ft)	376.55	31552.60	519.76
E.G. Slope (ft/ft)	0.000356	Area (sq ft)	376.55	31552.60	519.76
Q Total (cfs)	250000.00	Flow (cfs)	2043.22	244463.10	3493.65
Top Width (ft)	1130.45	Top Width (ft)	41.32	1048.75	40.37
Vel Total (ft/s)	7.70	Avg. Vel. (ft/s)	5.43	7.75	6.72
Max Chl Dpth (ft)	33.12	Hydr. Depth (ft)	9.11	30.09	12.87
Conv. Total (cfs)	13248220.0	Conv. (cfs)	108276.0	12954810.0	185138.3
Length Wtd. (ft)	106.04	Wetted Per. (ft)	49.45	1049.14	49.51
Min Ch El (ft)	1149.65	Shear (lb/sq ft)	0.17	0.67	0.23
Alpha	1.00	Stream Power (lb/ft s)	0.92	5.18	1.57

Table 6
HEC-RAS Report

Frctn Loss (ft)	0.04	Cum Volume (acre-ft)	80.86	2937.44	230.95
C & E Loss (ft)	0.00	Cum SA (acres)	12.87	103.99	31.22

CROSS SECTION OUTPUT Profile #Post-RDM-100yr

E.G. Elev (ft)	1176.98	Element	Left OB	Channel	Right OB
Vel Head (ft)	0.70	Wt. n-Val.	0.020	0.035	0.020
W.S. Elev (ft)	1176.28	Reach Len. (ft)	105.00	106.05	106.00
Crit W.S. (ft)		Flow Area (sq ft)	198.88	24745.32	283.76
E.G. Slope (ft/ft)	0.000371	Area (sq ft)	198.88	24745.32	283.76
Q Total (cfs)	169000.00	Flow (cfs)	1073.09	166407.20	1519.75
Top Width (ft)	1102.40	Top Width (ft)	21.31	1048.75	32.34
Vel Total (ft/s)	6.70	Avg. Vel. (ft/s)	5.40	6.72	5.36
Max Chl Dpth (ft)	26.63	Hydr. Depth (ft)	9.33	23.60	8.77
Conv. Total (cfs)	8774903.0	Conv. (cfs)	55717.6	8640276.0	78909.3
Length Wtd. (ft)	106.04	Wetted Per. (ft)	27.16	1049.14	39.19
Min Ch El (ft)	1149.65	Shear (lb/sq ft)	0.17	0.55	0.17
Alpha	1.00	Stream Power (lb/ft s)	0.91	3.67	0.90
Frctn Loss (ft)	0.04	Cum Volume (acre-ft)	45.89	2356.86	79.78
C & E Loss (ft)	0.00	Cum SA (acres)	4.47	103.55	19.73

CROSS SECTION

RIVER: Salt River
REACH: SR 202 RS: 240.3

INPUT
Description:
Station Elevation Data num= 97

Sta	Elev	Sta	Elev	Sta	Elev	Sta	Elev	Sta	Elev
0	1186.3	1.35	1186.25	11.48	1186.14	31.51	1186.23	36.43	1186.17
37.12	1185.61	37.16	1185.58	45.48	1178.85	48.41	1177.19	57.38	1172.34
66.85	1166.19	70.86	1163.93	71.3	1160.61	71.71	1158.74	74.71	1158.56
79.92	1158.34	81.32	1158.39	83.31	1158.37	85.76	1158.4	88.49	1158.38
91.47	1158.52	94.44	1158.68	97.76	1158.76	100.35	1158.79	119.29	1159.07
123.74	1159.17	124.5	1159.23	125.34	1159.17	133.14	1158.9	135.27	1158.85
136.32	1158.8	136.88	1158.75	141.4	1158.51	142.97	1158.4	146.36	1158.32
148.11	1158.24	149.38	1158.16	153.98	1158.2	160.95	1157.9	161.54	1157.85
162.71	1157.84	163.31	1157.8	164.53	1157.78	165.1	1157.74	166.85	1157.67
167.36	1157.63	168.98	1157.61	170.56	1157.54	176.78	1157.04	177.83	1156.93
178.82	1156.88	179.77	1156.74	189.38	1156.37	245.92	1154.42	287.3	1152.28
297.78	1152.2	300.58	1152.19	343.17	1151.59	355.9	1151.05	357.32	1151.02
388.6	1150.79	409.08	1150.66	789.93	1151.24	820.27	1152.19	821.27	1152.2
848.06	1153.7	860.9	1151.17	864.1	1150.66	894.86	1151.65	904.78	1151.54
909.44	1151.28	919.3	1150.77	932.88	1150.26	935.68	1149.91	958.62	1154.13
967.37	1154.46	979.08	1154.54	1029.63	1155.04	1034.54	1155.07	1046.33	1155.08
1062.11	1155.18	1085.93	1155.49	1093.67	1155.51	1103.76	1155.61	1121.66	1169.2

```
1121.68 1169.22 1131.59 1176.71 1145.52 1177.18 1149.03  1180.9 1152.52 1184.71
1159.05 1184.44 1168.93 1183.92 1175.11 1181.69 1192.49 1175.47 1198.82 1174.56
1199.69 1174.45  1209.2 1173.81

Manning's n Values          num=       3
     Sta   n Val     Sta   n Val     Sta   n Val
       0     .02   71.71    .035 1103.76     .02

Bank Sta: Left   Right    Lengths: Left Channel   Right     Coeff Contr.   Expan.
         71.71 1103.76              112   108.7     105              .1       .3
Ineffective Flow      num=       1
   Sta L   Sta R    Elev  Permanent
 1152.52  1209.2    1186       F
```

CROSS SECTION OUTPUT Profile #Pre-RDM-100yr

E.G. Elev (ft)	1180.98	Element	Left OB	Channel	Right OB
Vel Head (ft)	0.91	Wt. n-Val.	0.020	0.035	0.020
W.S. Elev (ft)	1180.06	Reach Len. (ft)	112.00	108.70	105.00
Crit W.S. (ft)	1164.11	Flow Area (sq ft)	232.98	28060.45	433.92
E.G. Slope (ft/ft)	0.000403	Area (sq ft)	232.98	28060.45	556.56
Q Total (cfs)	220000.00	Flow (cfs)	1192.88	216171.40	2635.71
Top Width (ft)	1133.80	Top Width (ft)	27.73	1032.05	74.02
Vel Total (ft/s)	7.66	Avg. Vel. (ft/s)	5.12	7.70	6.07
Max Chl Dpth (ft)	30.15	Hydr. Depth (ft)	8.40	27.19	9.76
Conv. Total (cfs)	10955200.0	Conv. (cfs)	59400.9	10764550.0	131248.6
Length Wtd. (ft)	108.67	Wetted Per. (ft)	36.65	1033.08	52.82
Min Ch El (ft)	1149.91	Shear (lb/sq ft)	0.16	0.68	0.21
Alpha	1.00	Stream Power (lb/ft s)	0.82	5.27	1.26
Frctn Loss (ft)	0.04	Cum Volume (acre-ft)	61.86	2635.05	163.43
C & E Loss (ft)	0.00	Cum SA (acres)	5.95	101.02	27.93

Warning: Divided flow computed for this cross-section.
Warning: The cross-section end points had to be extended vertically for the computed water surface.
Note: Multiple critical depths were found at this location. The critical depth with the lowest, valid, water surface was used.

CROSS SECTION OUTPUT Profile #Pre-RDM-Superflo

E.G. Elev (ft)	1183.65	Element	Left OB	Channel	Right OB
Vel Head (ft)	0.97	Wt. n-Val.	0.020	0.035	0.020
W.S. Elev (ft)	1182.68	Reach Len. (ft)	112.00	108.70	105.00
Crit W.S. (ft)	1165.11	Flow Area (sq ft)	309.82	30762.78	553.58
E.G. Slope (ft/ft)	0.000380	Area (sq ft)	309.82	30762.78	763.13
Q Total (cfs)	250000.00	Flow (cfs)	1733.20	244591.00	3675.76
Top Width (ft)	1146.75	Top Width (ft)	30.96	1032.05	83.73
Vel Total (ft/s)	7.90	Avg. Vel. (ft/s)	5.59	7.95	6.64
Max Chl Dpth (ft)	32.77	Hydr. Depth (ft)	10.01	29.81	11.80
Conv. Total (cfs)	12824690.0	Conv. (cfs)	88911.2	12547220.0	188562.1

Length Wtd. (ft)	108.66	Wetted Per. (ft)	40.81	1033.08	56.39
Min Ch El (ft)	1149.91	Shear (lb/sq ft)	0.18	0.71	0.23
Alpha	1.00	Stream Power (lb/ft s)	1.01	5.62	1.55
Frctn Loss (ft)	0.04	Cum Volume (acre-ft)	80.03	2861.58	229.39
C & E Loss (ft)	0.01	Cum SA (acres)	12.79	101.46	31.07

Warning: Divided flow computed for this cross-section.
Warning: The cross-section end points had to be extended vertically for the computed water surface.
Note: Multiple critical depths were found at this location. The critical depth with the lowest, valid, water surface was used.

CROSS SECTION OUTPUT Profile #Post-RDM-100yr

			Left OB	Channel	Right OB
E.G. Elev (ft)	1176.94	Element			
Vel Head (ft)	0.74	Wt. n-Val.	0.020	0.035	0.020
W.S. Elev (ft)	1176.19	Reach Len. (ft)	112.00	108.70	105.00
Crit W.S. (ft)	1162.30	Flow Area (sq ft)	136.87	24067.80	279.11
E.G. Slope (ft/ft)	0.000400	Area (sq ft)	136.87	24067.80	308.38
Q Total (cfs)	169000.00	Flow (cfs)	569.05	166745.00	1685.95
Top Width (ft)	1099.38	Top Width (ft)	21.46	1032.05	45.88
Vel Total (ft/s)	6.90	Avg. Vel. (ft/s)	4.16	6.93	6.04
Max Chl Dpth (ft)	26.28	Hydr. Depth (ft)	6.38	23.32	10.28
Conv. Total (cfs)	8447588.0	Conv. (cfs)	28444.2	8334871.0	84273.4
Length Wtd. (ft)	108.67	Wetted Per. (ft)	29.26	1033.08	34.07
Min Ch El (ft)	1149.91	Shear (lb/sq ft)	0.12	0.58	0.20
Alpha	1.00	Stream Power (lb/ft s)	0.49	4.03	1.24
Frctn Loss (ft)	0.04	Cum Volume (acre-ft)	45.48	2297.44	79.06
C & E Loss (ft)	0.00	Cum SA (acres)	4.42	101.02	19.64

Warning: Divided flow computed for this cross-section.
Warning: The cross-section end points had to be extended vertically for the computed water surface.
Note: Multiple critical depths were found at this location. The critical depth with the lowest, valid, water surface was used.

CROSS SECTION

RIVER: Salt River
REACH: SR 202 RS: 240.2

INPUT
Description:
Station Elevation Data num= 83

Sta	Elev	Sta	Elev	Sta	Elev	Sta	Elev	Sta	Elev
0	1184.48	5.55	1185	6.26	1185.07	9.24	1185.35	13.69	1185.74
20.42	1186.33	22.87	1187.06	23.15	1187.14	24.29	1187.06	31.5	1186.52
45.09	1186.54	57.24	1186.55	70.45	1185.414	83.17	1184.32	87.88	1178.59
97.63	1166.88	97.96	1166.49	100.24	1163.76	104.42	1158.48	105.96	1158.47

204.13	1155.17	220.02	1154.29	278.25	1151.61	284.29	1151.14	299.67	1151.09
302.3	1151.07	335.73	1150.85	347.35	1150.78	347.72	1150.77	363.26	1150.67
364.89	1150.66	668.28	1151.14	676.53	1151.17	744.58	1150.66	916.56	1150.24
933.58	1150.14	944.05	1151.74	946.65	1152.14	948.07	1152.34	952	1152.92
958.33	1153.84	960.97	1154.23	970.91	1154.42	977.89	1154.55	978.72	1154.53
984.26	1154.36	1006.41	1154.52	1010.99	1154.56	1032.4	1154.57	1037.76	1154.6
1049.8	1154.44	1064.53	1154.33	1077.68	1154.5	1079.23	1154.53	1081.32	1154.57
1084.25	1154.63	1088.62	1154.72	1088.96	1154.73	1089.56	1154.74	1093.2	1156.71
1094.16	1157.22	1098.1	1159.33	1099.96	1161	1107.06	1167.24	1111.98	1171.37
1113.28	1172.5	1113.3	1172.51	1117.32	1175.96	1119.99	1178.23	1127.12	1184.09
1127.36	1184.29	1128.04	1184.84	1145.82	1184.76	1158.03	1184.54	1169.53	1184.47
1175.82	1184.32	1176.66	1184.3	1178.56	1184.22	1181.36	1183.68	1183.12	1183.34
1183.56	1183.29	1184.65	1183.16	1186	1183.01				

Manning's n Values num= 3

Sta	n Val	Sta	n Val	Sta	n Val
0	.02	104.42	.035	1088.62	.02

Bank Sta: Left	Right	Lengths: Left	Channel	Right	Coeff Contr.	Expan.
104.42	1088.62	35	32.49	32	.1	.3

CROSS SECTION OUTPUT Profile #Pre-RDM-100yr

E.G. Elev (ft)	1180.93	Element	Left OB	Channel	Right OB
Vel Head (ft)	0.95	Wt. n-Val.	0.020	0.035	0.020
W.S. Elev (ft)	1179.97	Reach Len. (ft)	35.00	32.49	32.00
Crit W.S. (ft)		Flow Area (sq ft)	188.40	27430.09	464.66
E.G. Slope (ft/ft)	0.000406	Area (sq ft)	188.40	27430.09	464.66
Q Total (cfs)	220000.00	Flow (cfs)	1008.99	215555.00	3435.98
Top Width (ft)	1035.37	Top Width (ft)	17.68	984.20	33.49
Vel Total (ft/s)	7.83	Avg. Vel. (ft/s)	5.36	7.86	7.39
Max Chl Dpth (ft)	29.83	Hydr. Depth (ft)	10.66	27.87	13.87
Conv. Total (cfs)	10922120.0	Conv. (cfs)	50092.1	10701450.0	170582.6
Length Wtd. (ft)	32.49	Wetted Per. (ft)	27.83	984.68	42.30
Min Ch El (ft)	1150.14	Shear (lb/sq ft)	0.17	0.71	0.28
Alpha	1.00	Stream Power (lb/ft s)	0.92	5.54	2.06
Frctn Loss (ft)	0.01	Cum Volume (acre-ft)	61.32	2565.82	162.20
C & E Loss (ft)	0.00	Cum SA (acres)	5.89	98.51	27.80

CROSS SECTION OUTPUT Profile #Pre-RDM-Superflo

E.G. Elev (ft)	1183.61	Element	Left OB	Channel	Right OB
Vel Head (ft)	1.03	Wt. n-Val.	0.020	0.035	0.020
W.S. Elev (ft)	1182.58	Reach Len. (ft)	35.00	32.49	32.00
Crit W.S. (ft)		Flow Area (sq ft)	237.29	29996.55	556.13
E.G. Slope (ft/ft)	0.000387	Area (sq ft)	237.29	29996.55	556.13
Q Total (cfs)	250000.00	Flow (cfs)	1341.35	244401.70	4256.96
Top Width (ft)	1040.68	Top Width (ft)	19.82	984.20	36.66
Vel Total (ft/s)	8.12	Avg. Vel. (ft/s)	5.65	8.15	7.65

Table 6
HEC-RAS Report

Max Chl Dpth (ft)	32.44	Hydr. Depth (ft)	11.97	30.48	15.17
Conv. Total (cfs)	12706280.0	Conv. (cfs)	68174.1	12421750.0	216360.4
Length Wtd. (ft)	32.49	Wetted Per. (ft)	31.21	984.68	46.41
Min Ch El (ft)	1150.14	Shear (lb/sq ft)	0.18	0.74	0.29
Alpha	1.00	Stream Power (lb/ft s)	1.04	6.00	2.22
Frctn Loss (ft)	0.01	Cum Volume (acre-ft)	79.33	2785.77	227.80
C & E Loss (ft)	0.00	Cum SA (acres)	12.72	98.95	30.92

CROSS SECTION OUTPUT Profile #Post-RDM-100yr

E.G. Elev (ft)	1176.89	Element	Left OB	Channel	Right OB
Vel Head (ft)	0.76	Wt. n-Val.	0.020	0.035	0.020
W.S. Elev (ft)	1176.13	Reach Len. (ft)	35.00	32.49	32.00
Crit W.S. (ft)		Flow Area (sq ft)	126.51	23643.59	344.72
E.G. Slope (ft/ft)	0.000395	Area (sq ft)	126.51	23643.59	344.72
Q Total (cfs)	169000.00	Flow (cfs)	585.24	166131.30	2283.49
Top Width (ft)	1027.58	Top Width (ft)	14.49	984.20	28.90
Vel Total (ft/s)	7.01	Avg. Vel. (ft/s)	4.63	7.03	6.62
Max Chl Dpth (ft)	25.99	Hydr. Depth (ft)	8.73	24.02	11.93
Conv. Total (cfs)	8498744.0	Conv. (cfs)	29430.6	8354480.0	114833.0
Length Wtd. (ft)	32.49	Wetted Per. (ft)	22.83	984.68	36.31
Min Ch El (ft)	1150.14	Shear (lb/sq ft)	0.14	0.59	0.23
Alpha	1.00	Stream Power (lb/ft s)	0.63	4.16	1.55
Frctn Loss (ft)	0.01	Cum Volume (acre-ft)	45.15	2237.91	78.28
C & E Loss (ft)	0.00	Cum SA (acres)	4.37	98.51	19.55

CROSS SECTION

RIVER: Salt River
REACH: SR 202 RS: 240.1

INPUT
Description:
Station Elevation Data num= 87

Sta	Elev	Sta	Elev	Sta	Elev	Sta	Elev	Sta	Elev
0	1184.47	.78	1184.56	2.25	1184.73	4	1184.89	4.45	1184.93
14.37	1185.88	22.97	1186.61	25.28	1186.81	25.7	1186.95	27.8	1187.66
32.53	1187.05	35.4	1186.59	47.8	1186.58	62.3	1186.57	73.02	1186.56
78.52	1186.556	87.34	1186.55	94.42	1176.06	98.73	1169.67	106.15	1158.48
117.96	1157.98	136.09	1157.23	149.39	1156.68	167.18	1155.95	229.25	1153.77
236.58	1153.36	263.42	1152.13	272.72	1151.39	296.41	1151.32	300.87	1151.3
302.93	1151.28	304.91	1151.26	317.5	1151.15	320.21	1151.12	326.04	1151.09
332.36	1151.04	334.58	1151.02	343.3	1150.97	348.61	1150.93	373.43	1150.81
388.29	1150.66	575.23	1150.81	622.3	1150.98	738.57	1150.66	875.76	1150.45
930.9	1150.14	938.88	1151.32	943.32	1152.12	955.66	1154.03	956.7	1154.19
978.06	1154.53	979.72	1154.56	980.16	1154.57	981.89	1154.53	985.98	1154.43
987.77	1154.39	988.95	1154.36	991.83	1154.28	1000.13	1154.36	1018.61	1154.54

1030.1	1154.43	1045.38	1154.39	1069.95	1154.22	1072.52	1154.25	1072.66	1154.26
1072.87	1154.27	1073.22	1154.28	1075.69	1154.39	1079.46	1154.55	1084.52	1154.76
1087.24	1155.2	1088	1155.35	1089.2	1155.85	1097.18	1159.26	1105.65	1167.78
1107.21	1169.29	1119.25	1180.91	1123.22	1184.79	1124.42	1184.84	1125.77	1184.89
1139.76	1184.85	1152.5	1184.65	1177.72	1183.92	1177.91	1183.9	1178.05	1183.89
1178.27	1183.87	1179.01	1183.8						

Manning's n Values num= 3

Sta	n Val	Sta	n Val	Sta	n Val
0	.02	106.15	.035	1075.69	.02

Bank Sta: Left	Right	Lengths: Left	Channel	Right	Coeff Contr.	Expan.
106.15	1075.69	60	47.74	38	.1	.3

CROSS SECTION OUTPUT Profile #Pre-RDM-100yr

E.G. Elev (ft)	1180.92	Element	Left OB	Channel	Right OB
Vel Head (ft)	0.96	Wt. n-Val.	0.020	0.035	0.020
W.S. Elev (ft)	1179.95	Reach Len. (ft)	60.00	47.74	38.00
Crit W.S. (ft)		Flow Area (sq ft)	153.48	27115.46	734.64
E.G. Slope (ft/ft)	0.000403	Area (sq ft)	153.48	27115.46	734.64
Q Total (cfs)	220000.00	Flow (cfs)	750.90	212836.90	6412.19
Top Width (ft)	1026.47	Top Width (ft)	14.36	969.54	42.57
Vel Total (ft/s)	7.86	Avg. Vel. (ft/s)	4.89	7.85	8.73
Max Chl Dpth (ft)	29.81	Hydr. Depth (ft)	10.69	27.97	17.26
Conv. Total (cfs)	10959900.0	Conv. (cfs)	37408.4	10603050.0	319440.8
Length Wtd. (ft)	47.67	Wetted Per. (ft)	25.83	970.03	51.89
Min Ch El (ft)	1150.14	Shear (lb/sq ft)	0.15	0.70	0.36
Alpha	1.00	Stream Power (lb/ft s)	0.73	5.52	3.11
Frctn Loss (ft)	0.02	Cum Volume (acre-ft)	61.18	2545.48	161.76
C & E Loss (ft)	0.00	Cum SA (acres)	5.88	97.78	27.77

CROSS SECTION OUTPUT Profile #Pre-RDM-Superflo

E.G. Elev (ft)	1183.59	Element	Left OB	Channel	Right OB
Vel Head (ft)	1.03	Wt. n-Val.	0.020	0.035	0.020
W.S. Elev (ft)	1182.56	Reach Len. (ft)	60.00	47.74	38.00
Crit W.S. (ft)		Flow Area (sq ft)	193.20	29642.76	849.11
E.G. Slope (ft/ft)	0.000385	Area (sq ft)	193.20	29642.76	849.11
Q Total (cfs)	250000.00	Flow (cfs)	997.85	241384.30	7617.90
Top Width (ft)	1030.91	Top Width (ft)	16.12	969.54	45.25
Vel Total (ft/s)	8.15	Avg. Vel. (ft/s)	5.16	8.14	8.97
Max Chl Dpth (ft)	32.42	Hydr. Depth (ft)	11.99	30.57	18.77
Conv. Total (cfs)	12739860.0	Conv. (cfs)	50850.1	12300800.0	388203.9
Length Wtd. (ft)	47.67	Wetted Per. (ft)	28.98	970.03	55.62
Min Ch El (ft)	1150.14	Shear (lb/sq ft)	0.16	0.73	0.37
Alpha	1.00	Stream Power (lb/ft s)	0.83	5.98	3.29
Frctn Loss (ft)	0.02	Cum Volume (acre-ft)	79.16	2763.53	227.29
C & E Loss (ft)	0.00	Cum SA (acres)	12.71	98.22	30.89

Table 6
HEC-RAS Report

CROSS SECTION OUTPUT Profile #Post-RDM-100yr

E.G. Elev (ft)	1176.88	Element	Left OB	Channel	Right OB
Vel Head (ft)	0.77	Wt. n-Val.	0.020	0.035	0.020
W.S. Elev (ft)	1176.11	Reach Len. (ft)	60.00	47.74	38.00
Crit W.S. (ft)		Flow Area (sq ft)	103.28	23388.45	578.66
E.G. Slope (ft/ft)	0.000392	Area (sq ft)	103.28	23388.45	578.66
Q Total (cfs)	169000.00	Flow (cfs)	436.42	163985.30	4578.24
Top Width (ft)	1019.89	Top Width (ft)	11.76	969.54	38.59
Vel Total (ft/s)	7.02	Avg. Vel. (ft/s)	4.23	7.01	7.91
Max Chl Dpth (ft)	25.97	Hydr. Depth (ft)	8.78	24.12	15.00
Conv. Total (cfs)	8540562.0	Conv. (cfs)	22054.8	8287142.0	231365.3
Length Wtd. (ft)	47.67	Wetted Per. (ft)	21.19	970.03	46.35
Min Ch El (ft)	1150.14	Shear (lb/sq ft)	0.12	0.59	0.31
Alpha	1.00	Stream Power (lb/ft s)	0.50	4.13	2.41
Frctn Loss (ft)	0.02	Cum Volume (acre-ft)	45.05	2220.37	77.94
C & E Loss (ft)	0.00	Cum SA (acres)	4.36	97.78	19.52

CROSS SECTION

RIVER: Salt River
REACH: SR 202 RS: 240

INPUT
Description:
Station Elevation Data num= 99

Sta	Elev	Sta	Elev	Sta	Elev	Sta	Elev	Sta	Elev
0	1193.69	1.32	1200.99	9.38	1196.35	10	1202.15	19.69	1202.25
20.17	1205.62	23.17	1202.31	23.81	1207.19	27.07	1202.37	34.49	1202.48
34.86	1202.04	36.29	1212.3	36.35	1212.82	37.6	1211.48	40.99	1210.15
41.55	1213.56	43.33	1213.72	79.03	1213.39	284	1213.13	347.43	1212.51
348.38	1191.39	348.41	1190.89	367.06	1189.27	380.54	1187.91	382.98	1185.13
387.68	1185.7	399.45	1186.83	410.23	1187.67	413.31	1188.37	421.24	1186.7
467.52	1186.57	475.91	1186.55	485.84	1171.67	501.9	1157.51	514.37	1155.81
518.66	1155.83	609.97	1154.28	621.01	1154.08	635.92	1152.56	653.65	1151.45
658.18	1152.74	666.2	1152.92	687	1151.47	700.94	1151.3	742.22	1151.19
773.6	1150.66	1301.98	1150.14	1317.25	1152.16	1328.07	1154.43	1353.75	1154.59
1378.21	1154.42	1404.8	1154.53	1409.4	1154.11	1425.69	1154.18	1453.65	1154.64
1459.83	1155.31	1473.31	1168.29	1473.34	1168.33	1490.06	1184.54	1503.81	1184.51
1515.45	1183.81	1523.96	1183.6	1526.75	1183.64	1536.65	1184.24	1536.76	1183.96
1557.18	1181.86	1562.73	1179.37	1572.96	1176.09	1579.01	1175.49	1586.39	1175.5
1604.95	1175.12	1621.26	1174.48	1637.97	1173.52	1647.09	1173.55	1672.04	1174.39
1677.77	1174.45	1682.05	1174.76	1686.44	1174.67	1687.63	1174.47	1694.56	1174.26
1705.85	1174.71	1715.68	1174.74	1729.29	1174.37	1743.12	1175.22	1747.63	1173.64
1754.61	1173.98	1761.28	1174.7	1765.35	1174.44	1770.5	1174.77	1773.78	1175.63
1776.92	1175.81	1779.65	1176.26	1783.2	1176.43	1789.02	1176.39	1798.52	1175.26

1807.19 1175.3 1810.49 1175.94 1814.72 1175.63 1819.84 1175.81

Manning's n Values num= 3

Sta	n Val	Sta	n Val	Sta	n Val
0	.02	514.37	.035	1453.65	.02

Bank Sta: Left	Right	Lengths: Left	Channel	Right	Coeff Contr.	Expan.
514.37	1453.65	516	518.02	535	.1	.3

Ineffective Flow num= 1

Sta L	Sta R	Elev	Permanent
1490.06	1819.84	1186	F

CROSS SECTION OUTPUT Profile #Pre-RDM-100yr

E.G. Elev (ft)	1180.89	Element	Left OB	Channel	Right OB
Vel Head (ft)	0.99	Wt. n-Val.	0.020	0.035	0.020
W.S. Elev (ft)	1179.90	Reach Len. (ft)	516.00	518.02	535.00
Crit W.S. (ft)	1163.63	Flow Area (sq ft)	558.19	26466.39	467.32
E.G. Slope (ft/ft)	0.000415	Area (sq ft)	558.19	26466.39	1753.32
Q Total (cfs)	220000.00	Flow (cfs)	4603.42	211848.50	3548.05
Top Width (ft)	1263.21	Top Width (ft)	34.02	939.28	289.91
Vel Total (ft/s)	8.00	Avg. Vel. (ft/s)	8.25	8.00	7.59
Max Chl Dpth (ft)	29.76	Hydr. Depth (ft)	16.41	28.18	14.78
Conv. Total (cfs)	10799040.0	Conv. (cfs)	225965.7	10398910.0	174161.3
Length Wtd. (ft)	518.22	Wetted Per. (ft)	43.89	940.04	41.60
Min Ch El (ft)	1150.14	Shear (lb/sq ft)	0.33	0.73	0.29
Alpha	1.00	Stream Power (lb/ft s)	2.72	5.84	2.21
Frctn Loss (ft)	0.26	Cum Volume (acre-ft)	60.69	2516.12	160.67
C & E Loss (ft)	0.04	Cum SA (acres)	5.84	96.73	27.62

Warning: Divided flow computed for this cross-section.
Warning: The cross-section end points had to be extended vertically for the computed water surface.
Note: Multiple critical depths were found at this location. The critical depth with the lowest, valid, water surface was used.

CROSS SECTION OUTPUT Profile #Pre-RDM-Superflo

E.G. Elev (ft)	1183.57	Element	Left OB	Channel	Right OB
Vel Head (ft)	1.07	Wt. n-Val.	0.020	0.035	0.020
W.S. Elev (ft)	1182.50	Reach Len. (ft)	516.00	518.02	535.00
Crit W.S. (ft)	1164.67	Flow Area (sq ft)	649.04	28912.28	553.16
E.G. Slope (ft/ft)	0.000397	Area (sq ft)	649.04	28912.28	2520.83
Q Total (cfs)	250000.00	Flow (cfs)	5529.96	240129.40	4340.65
Top Width (ft)	1278.24	Top Width (ft)	35.76	939.28	303.20
Vel Total (ft/s)	8.30	Avg. Vel. (ft/s)	8.52	8.31	7.85
Max Chl Dpth (ft)	32.36	Hydr. Depth (ft)	18.15	30.78	16.12
Conv. Total (cfs)	12544740.0	Conv. (cfs)	277487.8	12049450.0	217809.6
Length Wtd. (ft)	518.24	Wetted Per. (ft)	47.02	940.04	45.34
Min Ch El (ft)	1150.14	Shear (lb/sq ft)	0.34	0.76	0.30

Table 6
HEC-RAS Report

Alpha	1.00	Stream Power (lb/ft s)	2.92	6.33	2.37
Frctn Loss (ft)	0.25	Cum Volume (acre-ft)	78.58	2731.44	225.82
C & E Loss (ft)	0.05	Cum SA (acres)	12.67	97.17	30.74

Warning: Divided flow computed for this cross-section.
Warning: The cross-section end points had to be extended vertically for the computed water surface.
Warning: The velocity head has changed by more than 0.5 ft (0.15 m). This may indicate the need for additional cross sections.
Note: Multiple critical depths were found at this location. The critical depth with the lowest, valid, water surface was used.

CROSS SECTION OUTPUT Profile #Post-RDM-100yr

E.G. Elev (ft)	1176.86	Element	Left OB	Channel	Right OB
Vel Head (ft)	0.79	Wt. n-Val.	0.020	0.035	0.020
W.S. Elev (ft)	1176.06	Reach Len. (ft)	516.00	518.02	535.00
Crit W.S. (ft)	1161.67	Flow Area (sq ft)	432.65	22864.98	353.66
E.G. Slope (ft/ft)	0.000402	Area (sq ft)	432.65	22864.98	674.17
Q Total (cfs)	169000.00	Flow (cfs)	3190.78	163396.60	2412.64
Top Width (ft)	1231.70	Top Width (ft)	31.46	939.28	260.96
Vel Total (ft/s)	7.15	Avg. Vel. (ft/s)	7.37	7.15	6.82
Max Chl Dpth (ft)	25.92	Hydr. Depth (ft)	13.75	24.34	12.78
Conv. Total (cfs)	8428656.0	Conv. (cfs)	159135.8	8149193.0	120327.5
Length Wtd. (ft)	518.19	Wetted Per. (ft)	39.28	940.04	36.09
Min Ch El (ft)	1150.14	Shear (lb/sq ft)	0.28	0.61	0.25
Alpha	1.00	Stream Power (lb/ft s)	2.04	4.36	1.68
Frctn Loss (ft)	0.26	Cum Volume (acre-ft)	44.68	2195.03	77.39
C & E Loss (ft)	0.04	Cum SA (acres)	4.33	96.73	19.39

Warning: Divided flow computed for this cross-section.
Warning: The cross-section end points had to be extended vertically for the computed water surface.
Note: Multiple critical depths were found at this location. The critical depth with the lowest, valid, water surface was used.

CROSS SECTION

RIVER: Salt River
REACH: SR 202 RS: 239

INPUT
Description:
Station Elevation Data num= 99

Sta	Elev	Sta	Elev	Sta	Elev	Sta	Elev	Sta	Elev
0	1186.03	.91	1186.05	9.9	1187.27	13.33	1187.52	15.5	1187.53
17.27	1187.47	21.47	1187.07	26.92	1186.35	29.64	1185.92	54.88	1185.89
70.45	1186.04	84.2	1186	88.22	1185.93	94.74	1185.95	120.52	1185.79
137.97	1186	140.68	1186.13	150.49	1188.54	168.95	1192.92	182.02	1196.84

192.12	1199.78	196	1200.3	202.75	1200.6	216	1201.66	228.2	1202.39
230.77	1202.02	235.51	1201.51	250.91	1196.41	268.4	1190.11	278.96	1187.01
293.61	1182.81	300.5	1182.34	314.27	1181.22	324.6	1177.93	327.32	1179.41
331.65	1181.31	350.1	1181.72	358.98	1181.58	384.08	1180.86	385.04	1180.87
385.15	1180.81	413.05	1180.94	421.96	1181.26	453.84	1180.65	458.22	1182.13
479.17	1184.33	495.51	1185.1	500.05	1181.08	500.12	1181.02	509.79	1172.48
529.74	1154.57	543.99	1154.33	556.14	1154.24	573.55	1154	605.41	1154.48
621.94	1154.22	633.43	1154.11	650.96	1154.03	661.45	1154.04	664.71	1152.68
675.15	1150.37	738.5	1150.66	1156.38	1150.28	1161.77	1151.88	1172.09	1152.78
1191.46	1152.27	1195.62	1152.37	1200.07	1152.33	1208.82	1152.08	1221.18	1152.16
1223.65	1152.32	1236.37	1152.41	1251.23	1152.38	1283.23	1152.49	1296.1	1152.93
1304.11	1153.31	1315.39	1154.05	1321.55	1154.86	1331.63	1164.53	1331.69	1164.58
1350.09	1182.28	1362.42	1182.63	1363.73	1182.6	1373.7	1179.52	1389.35	1174.94
1392.65	1173.89	1401.44	1172.83	1405.04	1172.63	1413.7	1171.97	1455.05	1173.07
1480.99	1173.16	1488.29	1173.44	1494.13	1173.11	1498.92	1173.02	1521.4	1172.81
1531.18	1174.91	1546.97	1175.16	1585.21	1175.33	1592.95	1175.84		

Manning's n Values num= 3

Sta	n Val	Sta	n Val	Sta	n Val
0	.02	529.74	.035	1321.55	.02

Bank Sta: Left	Right	Lengths: Left	Channel	Right	Coeff Contr.	Expan.
529.74	1321.55	485	472.26	460	.1	.3

Ineffective Flow num= 2

Sta L	Sta R	Elev	Permanent
0	495.51	1186	F
1350.09	1592.95	1186	F

CROSS SECTION OUTPUT Profile #Pre-RDM-100yr

E.G. Elev (ft)	1180.59	Element	Left OB	Channel	Right OB
Vel Head (ft)	1.42	Wt. n-Val.	0.020	0.035	0.020
W.S. Elev (ft)	1179.17	Reach Len. (ft)	485.00	472.26	460.00
Crit W.S. (ft)	1164.74	Flow Area (sq ft)	337.48	21863.74	307.85
E.G. Slope (ft/ft)	0.000614	Area (sq ft)	341.31	21863.74	1462.27
Q Total (cfs)	215000.00	Flow (cfs)	2715.17	209875.20	2409.64
Top Width (ft)	1068.88	Top Width (ft)	33.70	791.81	243.36
Vel Total (ft/s)	9.55	Avg. Vel. (ft/s)	8.05	9.60	7.83
Max Chl Dpth (ft)	28.89	Hydr. Depth (ft)	12.26	27.61	12.16
Conv. Total (cfs)	8680178.0	Conv. (cfs)	109619.4	8473274.0	97284.4
Length Wtd. (ft)	472.26	Wetted Per. (ft)	36.92	792.73	35.09
Min Ch El (ft)	1150.28	Shear (lb/sq ft)	0.35	1.06	0.34
Alpha	1.00	Stream Power (lb/ft s)	2.82	10.14	2.63
Frctn Loss (ft)	0.27	Cum Volume (acre-ft)	55.36	2228.74	140.92
C & E Loss (ft)	0.04	Cum SA (acres)	5.44	86.44	24.35

Warning: Divided flow computed for this cross-section.
Warning: The cross-section end points had to be extended vertically for the computed water surface.
Note: Multiple critical depths were found at this location. The critical depth with the lowest, valid,

water surface was used.

CROSS SECTION OUTPUT Profile #Pre-RDM-Superflo

E.G. Elev (ft)	1183.26	Element	Left OB	Channel	Right OB
Vel Head (ft)	1.61	Wt. n-Val.	0.020	0.035	0.020
W.S. Elev (ft)	1181.66	Reach Len. (ft)	485.00	472.26	460.00
Crit W.S. (ft)	1166.13	Flow Area (sq ft)	409.48	23833.98	374.04
E.G. Slope (ft/ft)	0.000619	Area (sq ft)	511.57	23833.98	2081.21
Q Total (cfs)	250000.00	Flow (cfs)	3527.64	243335.30	3137.02
Top Width (ft)	1217.57	Top Width (ft)	171.69	791.81	254.07
Vel Total (ft/s)	10.16	Avg. Vel. (ft/s)	8.61	10.21	8.39
Max Chl Dpth (ft)	31.38	Hydr. Depth (ft)	13.49	30.10	13.41
Conv. Total (cfs)	10051710.0	Conv. (cfs)	141835.2	9783741.0	126129.6
Length Wtd. (ft)	472.26	Wetted Per. (ft)	40.68	792.73	38.68
Min Ch El (ft)	1150.28	Shear (lb/sq ft)	0.39	1.16	0.37
Alpha	1.00	Stream Power (lb/ft s)	3.35	11.85	3.13
Frctn Loss (ft)	0.28	Cum Volume (acre-ft)	71.70	2417.81	197.56
C & E Loss (ft)	0.04	Cum SA (acres)	11.44	86.88	27.32

Warning: Divided flow computed for this cross-section.
Warning: The cross-section end points had to be extended vertically for the computed water surface.
Note: Multiple critical depths were found at this location. The critical depth with the lowest, valid, water surface was used.

CROSS SECTION OUTPUT Profile #Post-RDM-100yr

E.G. Elev (ft)	1176.56	Element	Left OB	Channel	Right OB
Vel Head (ft)	1.19	Wt. n-Val.	0.020	0.035	0.020
W.S. Elev (ft)	1175.37	Reach Len. (ft)	485.00	472.26	460.00
Crit W.S. (ft)	1162.78	Flow Area (sq ft)	240.98	18852.21	219.11
E.G. Slope (ft/ft)	0.000627	Area (sq ft)	240.98	18852.21	570.60
Q Total (cfs)	169000.00	Flow (cfs)	1752.36	165699.90	1547.70
Top Width (ft)	1034.27	Top Width (ft)	23.22	791.81	219.24
Vel Total (ft/s)	8.75	Avg. Vel. (ft/s)	7.27	8.79	7.06
Max Chl Dpth (ft)	25.09	Hydr. Depth (ft)	10.38	23.81	10.26
Conv. Total (cfs)	6750648.0	Conv. (cfs)	69997.6	6618828.0	61822.4
Length Wtd. (ft)	472.26	Wetted Per. (ft)	31.17	792.73	29.61
Min Ch El (ft)	1150.28	Shear (lb/sq ft)	0.30	0.93	0.29
Alpha	1.00	Stream Power (lb/ft s)	2.20	8.18	2.05
Frctn Loss (ft)	0.28	Cum Volume (acre-ft)	40.69	1946.97	69.75
C & E Loss (ft)	0.03	Cum SA (acres)	4.01	86.44	16.44

Warning: Divided flow computed for this cross-section.
Note: Multiple critical depths were found at this location. The critical depth with the lowest, valid, water surface was used.

CROSS SECTION

Table 6
HEC-RAS Report

RIVER: Salt River
REACH: SR 202 RS: 238

INPUT
Description:
Station Elevation Data num= 99

Sta	Elev	Sta	Elev	Sta	Elev	Sta	Elev	Sta	Elev
0	1179.69	7.3	1180.27	18.68	1181.67	31.25	1183.54	61.73	1189.47
75.48	1190.64	79.28	1190.57	82.45	1190.7	84.94	1191.02	88.58	1190.97
103.37	1191.35	118.51	1191.56	174.1	1192.95	186.6	1192.41	200.8	1192.08
217.28	1192.2	231.88	1191.52	240.66	1191.57	245.7	1191.79	252.85	1190.98
272.38	1187.19	287.33	1184.8	306.12	1184.11	349.44	1181.75	381.21	1182.29
405.95	1181.98	411.73	1181.49	421.97	1180.91	472.83	1181.92	482.99	1183.69
484.85	1184.03	504.81	1184.87	510.29	1179.43	534.14	1154.87	536.59	1154.25
569.71	1153.53	592.94	1153.69	606.83	1153.46	619.73	1154.01	630.48	1154.11
650.38	1153.75	654.65	1153.81	659.82	1153.65	663.35	1154.38	665.75	1153.71
668.53	1153.51	680.74	1153.64	685.76	1152.29	690.01	1150.41	763.71	1150.66
775.23	1149.71	894.77	1148.94	922.42	1150.66	935.95	1149.48	1020.82	1148.63
1025.61	1150.66	1134.82	1147.46	1191.79	1150.4	1203.02	1153.23	1218.25	1153.41
1234.23	1153.31	1260.76	1152.87	1261.41	1152.97	1274.86	1152.91	1345.23	1151.55
1348.71	1151.88	1357.73	1160.48	1357.81	1160.55	1380.8	1182.49	1397.39	1182.79
1424.65	1173.16	1437.42	1172.04	1447.47	1171.38	1482.62	1171.33	1490.04	1172.04
1496.48	1171.42	1503.45	1171.86	1507.96	1172	1520.74	1171.98	1528.26	1171.69
1533.29	1171.12	1534.87	1171.07	1538.31	1171.24	1546.27	1171.19	1556.41	1171.64
1559.24	1172.22	1562.19	1172.18	1566.93	1172.41	1576.28	1172.35	1583.55	1172.62
1589.37	1173.1	1595.61	1173.17	1604.49	1175.84	1608.12	1175.54	1612.72	1175.45
1620.9	1175.65	1635.38	1175.76	1639.81	1175.9	1666.64	1176.03		

Manning's n Values num= 3

Sta	n Val	Sta	n Val	Sta	n Val
0	.02	536.59	.035	1348.71	.02

Bank Sta: Left	Right	Lengths: Left	Channel	Right	Coeff Contr.	Expan.
536.59	1348.71	572	501.48	433	.1	.3

Ineffective Flow num= 2

Sta L	Sta R	Elev	Permanent
0	504.81	1185	F
1380.8	1666.64	1185	F

CROSS SECTION OUTPUT Profile #Pre-RDM-100yr

E.G. Elev (ft)	1180.28	Element	Left OB	Channel	Right OB
Vel Head (ft)	1.29	Wt. n-Val.	0.020	0.035	0.020
W.S. Elev (ft)	1178.99	Reach Len. (ft)	572.00	501.48	433.00
Crit W.S. (ft)	1163.77	Flow Area (sq ft)	342.25	22852.95	385.28
E.G. Slope (ft/ft)	0.000545	Area (sq ft)	342.25	22852.95	1891.04
Q Total (cfs)	215000.00	Flow (cfs)	2657.51	209279.30	3063.16
Top Width (ft)	1124.89	Top Width (ft)	25.87	812.12	286.90

Vel Total (ft/s)	9.12	Avg. Vel. (ft/s)	7.76	9.16	7.95
Max Chl Dpth (ft)	31.53	Hydr. Depth (ft)	13.23	28.14	13.56
Conv. Total (cfs)	9207352.0	Conv. (cfs)	113807.6	8962365.0	131179.7
Length Wtd. (ft)	501.93	Wetted Per. (ft)	36.14	813.98	39.27
Min Ch El (ft)	1147.46	Shear (lb/sq ft)	0.32	0.96	0.33
Alpha	1.00	Stream Power (lb/ft s)	2.50	8.75	2.66
Frctn Loss (ft)	0.30	Cum Volume (acre-ft)	51.55	1986.34	123.22
C & E Loss (ft)	0.02	Cum SA (acres)	5.11	77.74	21.55

Warning: Divided flow computed for this cross-section.
Warning: The cross-section end points had to be extended vertically for the computed water surface.
Note: Multiple critical depths were found at this location. The critical depth with the lowest, valid, water surface was used.

CROSS SECTION OUTPUT Profile #Pre-RDM-Superflo

E.G. Elev (ft)	1182.95	Element	Left OB	Channel	Right OB
Vel Head (ft)	1.47	Wt. n-Val.	0.020	0.035	0.020
W.S. Elev (ft)	1181.48	Reach Len. (ft)	572.00	501.48	433.00
Crit W.S. (ft)	1165.14	Flow Area (sq ft)	409.85	24878.00	459.41
E.G. Slope (ft/ft)	0.000553	Area (sq ft)	437.81	24878.00	2618.50
Q Total (cfs)	250000.00	Flow (cfs)	3395.32	242705.70	3899.02
Top Width (ft)	1192.98	Top Width (ft)	84.28	812.12	296.57
Vel Total (ft/s)	9.71	Avg. Vel. (ft/s)	8.28	9.76	8.49
Max Chl Dpth (ft)	34.02	Hydr. Depth (ft)	14.45	30.63	14.80
Conv. Total (cfs)	10635020.0	Conv. (cfs)	144437.1	10324710.0	165864.5
Length Wtd. (ft)	501.81	Wetted Per. (ft)	39.67	813.98	42.89
Min Ch El (ft)	1147.46	Shear (lb/sq ft)	0.36	1.05	0.37
Alpha	1.00	Stream Power (lb/ft s)	2.95	10.29	3.14
Frctn Loss (ft)	0.32	Cum Volume (acre-ft)	66.42	2153.75	172.74
C & E Loss (ft)	0.02	Cum SA (acres)	10.02	78.18	24.41

Warning: Divided flow computed for this cross-section.
Warning: The cross-section end points had to be extended vertically for the computed water surface.
Note: Multiple critical depths were found at this location. The critical depth with the lowest, valid, water surface was used.

CROSS SECTION OUTPUT Profile #Post-RDM-100yr

E.G. Elev (ft)	1176.25	Element	Left OB	Channel	Right OB
Vel Head (ft)	1.08	Wt. n-Val.	0.020	0.035	0.020
W.S. Elev (ft)	1175.17	Reach Len. (ft)	572.00	501.48	433.00
Crit W.S. (ft)	1161.87	Flow Area (sq ft)	250.55	19752.28	284.42
E.G. Slope (ft/ft)	0.000552	Area (sq ft)	250.55	19752.28	863.24
Q Total (cfs)	169000.00	Flow (cfs)	1768.57	165174.80	2056.67
Top Width (ft)	1041.99	Top Width (ft)	22.16	812.12	207.71
Vel Total (ft/s)	8.33	Avg. Vel. (ft/s)	7.06	8.36	7.23
Max Chl Dpth (ft)	27.71	Hydr. Depth (ft)	11.31	24.32	11.65

Table 6
HEC-RAS Report

Conv. Total (cfs)	7191577.0	Conv. (cfs)	75259.3	7028799.0	87518.8
Length Wtd. (ft)	501.90	Wetted Per. (ft)	30.82	813.98	33.74
Min Ch El (ft)	1147.46	Shear (lb/sq ft)	0.28	0.84	0.29
Alpha	1.00	Stream Power (lb/ft s)	1.98	7.00	2.10
Frctn Loss (ft)	0.30	Cum Volume (acre-ft)	37.96	1737.71	62.18
C & E Loss (ft)	0.02	Cum SA (acres)	3.76	77.74	14.19

Warning: Divided flow computed for this cross-section.
Note: Multiple critical depths were found at this location. The critical depth with the lowest, valid, water surface was used.

CROSS SECTION

RIVER: Salt River
REACH: SR 202 RS: 237

INPUT
Description:
Station Elevation Data num= 100

Sta	Elev	Sta	Elev	Sta	Elev	Sta	Elev	Sta	Elev
0	1184.54	12.27	1184.42	20.39	1184.19	22.7	1184.58	30.03	1183.9
34.81	1183.01	37.84	1183.07	51.56	1182.47	77.58	1183.67	85.31	1183.46
87.74	1183.67	91.2	1183.77	100.81	1186.28	106.16	1186.87	119.72	1190.36
120.64	1190.48	124.63	1191.41	129.09	1192.21	132.35	1192.39	140.52	1193.31
152.65	1194.02	182.54	1195.37	188.83	1195.41	196.27	1195.28	207.39	1191.9
213.67	1190.67	214.68	1190.63	221.23	1184.99	224.28	1182.14	230.35	1178.21
251.69	1166.94	262.6	1160.46	268.16	1157.4	274.36	1153.49	288.36	1152.1
293.27	1151.51	306.03	1151.6	318.78	1151.8	357.99	1151.72	404.71	1152.01
418.39	1152.27	439.85	1151.84	442.81	1150.44	449.95	1150.35	450.75	1149.66
486.62	1147.5	532.11	1147.2	580.81	1145.62	623.35	1145.93	696.34	1145.77
774.66	1144.48	833.43	1146.85	905.86	1149.43	939.23	1150.5	948.02	1151.38
970.57	1151.11	980.62	1151.13	1000.27	1151.51	1003.09	1151.69	1018.93	1151.9
1038.6	1151.94	1064.73	1152.28	1077.02	1152.07	1094.49	1153	1098.16	1153.67
1101.85	1157.31	1101.88	1157.34	1106.07	1161.49	1126.81	1182.53	1141.21	1182.15
1158.69	1176.04	1165.2	1175.53	1190.6	1173.1	1207.92	1172.45	1210.54	1172.26
1217.16	1172.36	1224.1	1173.06	1235.74	1173.15	1242.79	1173.52	1248.14	1173.09
1254.44	1173.08	1263.09	1173.43	1267.64	1173.44	1275.35	1173.08	1286.78	1172.8
1299.88	1173.81	1305.37	1174.41	1320.34	1174.69	1324.63	1174.9	1331.64	1174.65
1348.43	1173.24	1359.78	1173.78	1367.39	1173.98	1373.77	1173.32	1376.25	1173.66
1385.28	1173.81	1392.44	1173.7	1395.06	1173.79	1396.61	1174.09	1400.59	1174.19

Manning's n Values num= 3

Sta	n Val	Sta	n Val	Sta	n Val
0	.02	293.27	.035	1094.49	.02

Bank Sta: Left	Right	Lengths: Left	Channel	Right	Coeff Contr.	Expan.
293.27	1094.49	412	416.66	425	.1	.3

Ineffective Flow num= 1

Table 6
HEC-RAS Report

Sta L	Sta R	Elev	Permanent
1126.81	1400.59	1185	F

Blocked Obstructions num= 6

Sta L	Sta R	Elev	Sta L	Sta R	Elev	Sta L	Sta R	Elev
232	242	1180	284.5	294.5	1180	317.5	327.5	1180
353.5	363.5	1180	387.5	397.5	1180	423.39	433.89	1180

CROSS SECTION OUTPUT Profile #Pre-RDM-100yr

			Left OB	Channel	Right OB
E.G. Elev (ft)	1179.96	Element			
Vel Head (ft)	1.23	Wt. n-Val.	0.020	0.035	0.020
W.S. Elev (ft)	1178.72	Reach Len. (ft)	412.00	416.66	425.00
Crit W.S. (ft)	1162.00	Flow Area (sq ft)	770.44	22947.59	406.85
E.G. Slope (ft/ft)	0.000678	Area (sq ft)	770.44	22947.59	1644.06
Q Total (cfs)	215000.00	Flow (cfs)	6699.64	204545.80	3754.53
Top Width (ft)	1082.58	Top Width (ft)	44.94	759.49	278.15
Vel Total (ft/s)	8.91	Avg. Vel. (ft/s)	8.70	8.91	9.23
Max Chl Dpth (ft)	34.24	Hydr. Depth (ft)	17.14	30.21	14.24
Conv. Total (cfs)	8256540.0	Conv. (cfs)	257283.1	7855074.0	144183.4
Length Wtd. (ft)	416.70	Wetted Per. (ft)	84.62	1002.32	39.05
Min Ch El (ft)	1144.48	Shear (lb/sq ft)	0.39	0.97	0.44
Alpha	1.00	Stream Power (lb/ft s)	3.35	8.64	4.07
Frctn Loss (ft)	0.36	Cum Volume (acre-ft)	44.25	1722.70	105.65
C & E Loss (ft)	0.06	Cum SA (acres)	4.65	68.70	18.74

Warning: Divided flow computed for this cross-section.
Warning: The cross-section end points had to be extended vertically for the computed water surface.
Warning: The velocity head has changed by more than 0.5 ft (0.15 m). This may indicate the need for additional cross sections.
Note: Multiple critical depths were found at this location. The critical depth with the lowest, valid, water surface was used.

CROSS SECTION OUTPUT Profile #Pre-RDM-Superflo

			Left OB	Channel	Right OB
E.G. Elev (ft)	1182.61	Element			
Vel Head (ft)	1.41	Wt. n-Val.	0.020	0.035	0.020
W.S. Elev (ft)	1181.20	Reach Len. (ft)	412.00	416.66	425.00
Crit W.S. (ft)	1163.39	Flow Area (sq ft)	908.92	24877.35	480.57
E.G. Slope (ft/ft)	0.000749	Area (sq ft)	908.92	24877.35	2344.25
Q Total (cfs)	250000.00	Flow (cfs)	7473.54	237605.90	4920.59
Top Width (ft)	1156.42	Top Width (ft)	67.54	801.22	287.67
Vel Total (ft/s)	9.52	Avg. Vel. (ft/s)	8.22	9.55	10.24
Max Chl Dpth (ft)	36.72	Hydr. Depth (ft)	13.46	31.05	15.50
Conv. Total (cfs)	9134845.0	Conv. (cfs)	273078.5	8681971.0	179795.3
Length Wtd. (ft)	416.72	Wetted Per. (ft)	111.77	1055.54	42.53
Min Ch El (ft)	1144.48	Shear (lb/sq ft)	0.38	1.10	0.53
Alpha	1.00	Stream Power (lb/ft s)	3.13	10.53	5.41
Frctn Loss (ft)	0.39	Cum Volume (acre-ft)	57.58	1867.35	148.08
C & E Loss (ft)	0.07	Cum SA (acres)	9.02	68.90	21.51

Table 6
HEC-RAS Report

Warning: Divided flow computed for this cross-section.
Warning: The cross-section end points had to be extended vertically for the computed water surface.
Warning: The velocity head has changed by more than 0.5 ft (0.15 m). This may indicate the need for additional cross sections.
Note: Multiple critical depths were found at this location. The critical depth with the lowest, valid, water surface was used.

CROSS SECTION OUTPUT Profile #Post-RDM-100yr

E.G. Elev (ft)	1175.93	Element	Left OB	Channel	Right OB
Vel Head (ft)	1.01	Wt. n-Val.	0.020	0.035	0.020
W.S. Elev (ft)	1174.92	Reach Len. (ft)	412.00	416.66	425.00
Crit W.S. (ft)	1160.03	Flow Area (sq ft)	607.06	20059.45	305.34
E.G. Slope (ft/ft)	0.000635	Area (sq ft)	607.06	20059.45	619.92
Q Total (cfs)	169000.00	Flow (cfs)	4671.44	161845.50	2483.05
Top Width (ft)	1055.84	Top Width (ft)	42.50	759.49	253.85
Vel Total (ft/s)	8.06	Avg. Vel. (ft/s)	7.70	8.07	8.13
Max Chl Dpth (ft)	30.44	Hydr. Depth (ft)	14.28	26.41	12.30
Conv. Total (cfs)	6708598.0	Conv. (cfs)	185436.7	6424595.0	98566.9
Length Wtd. (ft)	416.69	Wetted Per. (ft)	72.82	968.10	33.71
Min Ch El (ft)	1144.48	Shear (lb/sq ft)	0.33	0.82	0.36
Alpha	1.00	Stream Power (lb/ft s)	2.54	6.62	2.92
Frctn Loss (ft)	0.33	Cum Volume (acre-ft)	32.33	1508.54	54.80
C & E Loss (ft)	0.05	Cum SA (acres)	3.33	68.70	11.90

Warning: Divided flow computed for this cross-section.
Warning: The cross-section end points had to be extended vertically for the computed water surface.
Warning: The velocity head has changed by more than 0.5 ft (0.15 m). This may indicate the need for additional cross sections.
Note: Multiple critical depths were found at this location. The critical depth with the lowest, valid, water surface was used.

CROSS SECTION

RIVER: Salt River
REACH: SR 202 RS: 236

INPUT
Description:
Station Elevation Data num= 100

Sta	Elev	Sta	Elev	Sta	Elev	Sta	Elev	Sta	Elev
0	1190.48	20.11	1190.05	31.27	1189.73	44.51	1189.66	55.42	1190.02
71.45	1189.86	77.63	1189.65	79.63	1189.47	87.83	1192.7	89.36	1191.91
91.67	1192.17	99.23	1200.91	107.61	1210.11	108.46	1209.53	109.01	1209.31
109.93	1210.26	110.54	1209.78	110.9	1209.02	113.51	1207	113.73	1206.73
114.27	1206.39	116.53	1204.36	122.8	1200.06	132.27	1195.93	138.68	1193.5

Table 6
HEC-RAS Report

145.1	1189.97	167.36	1189.73	173.17	1188.89	174.48	1188.96	199.82	1188.99
201.95	1188.91	215.61	1188.84	230.12	1187.98	235.75	1187.15	239.27	1186.77
254.98	1184.74	268.41	1182.9	280.84	1181.06	294.76	1180.8	298.67	1183.55
315.1	1183.81	315.12	1183.98	315.15	1183.83	315.55	1183.78	332.2	1168.13
332.25	1168.09	338.69	1162.08	347.52	1153.73	376.47	1153.14	417.66	1152.9
468.42	1153.08	499.1	1150.32	512.72	1151	520.35	1149.36	528.46	1148.64
594.16	1141.99	621.28	1142.2	681.59	1141.97	696.74	1141.75	754.98	1141.87
804.34	1143.43	817.53	1144.31	828.66	1146.07	849.84	1148.7	855.66	1150.16
861.34	1152.08	906.44	1152.45	910	1152.56	915.52	1152.26	918.66	1152.19
966.37	1152.29	978.8	1152.38	983.1	1152.31	1007.95	1152.29	1032.23	1152.45
1036.65	1156.31	1036.71	1156.36	1064.03	1180.41	1069.29	1180.73	1074.73	1180.51
1076.85	1180.21	1093.79	1173.98	1096.95	1172.66	1124.17	1172.02	1139.28	1171.91
1152.22	1171.96	1162.99	1171.79	1171.97	1171.82	1183.7	1172.01	1190.23	1172
1190.8	1171.64	1192.13	1171.61	1192.28	1171.97	1207.01	1172.02	1212.05	1171.71
1224.2	1171.93	1292.14	1172.27	1295.49	1172.21	1300.25	1172.83	1304.29	1173.1

Manning's n Values num= 3

Sta	n Val	Sta	n Val	Sta	n Val
0	.02	347.52	.035	1032.23	.02

Bank Sta: Left	Right	Lengths: Left	Channel	Right	Coeff Contr.	Expan.
347.52	1032.23	425	404.51	390	.1	.3

Ineffective Flow num= 2

Sta L	Sta R	Elev	Permanent
0	315.12	1185	F
1064.03	1304.29	1185	F

Blocked Obstructions num= 5

Sta L	Sta R	Elev	Sta L	Sta R	Elev	Sta L	Sta R	Elev
377.5	387.5	1180	425.5	435.5	1180	464.5	474.5	1180
494.66	504.66	1180	524.82	534.82	1180			

CROSS SECTION OUTPUT Profile #Pre-RDM-100yr

E.G. Elev (ft)	1179.54	Element	Left OB	Channel	Right OB
Vel Head (ft)	1.86	Wt. n-Val.	0.020	0.035	0.020
W.S. Elev (ft)	1177.67	Reach Len. (ft)	425.00	404.51	390.00
Crit W.S. (ft)	1163.10	Flow Area (sq ft)	304.56	18971.60	362.26
E.G. Slope (ft/ft)	0.001137	Area (sq ft)	304.56	18971.60	1556.76
Q Total (cfs)	215000.00	Flow (cfs)	3230.16	207704.30	4065.59
Top Width (ft)	909.42	Top Width (ft)	25.47	634.71	249.24
Vel Total (ft/s)	10.95	Avg. Vel. (ft/s)	10.61	10.95	11.22
Max Chl Dpth (ft)	35.92	Hydr. Depth (ft)	11.96	29.89	12.63
Conv. Total (cfs)	6376564.0	Conv. (cfs)	95801.4	6160184.0	120578.9
Length Wtd. (ft)	404.50	Wetted Per. (ft)	34.96	896.93	38.20
Min Ch El (ft)	1141.75	Shear (lb/sq ft)	0.62	1.50	0.67
Alpha	1.00	Stream Power (lb/ft s)	6.56	16.44	7.55
Frctn Loss (ft)	0.60	Cum Volume (acre-ft)	39.17	1522.22	90.03
C & E Loss (ft)	0.07	Cum SA (acres)	4.31	62.03	16.17

Table 6
HEC-RAS Report

Warning: Divided flow computed for this cross-section.
Warning: The cross-section end points had to be extended vertically for the computed water surface.
Warning: The velocity head has changed by more than 0.5 ft (0.15 m). This may indicate the need for additional cross sections.
Note: Multiple critical depths were found at this location. The critical depth with the lowest, valid, water surface was used.

CROSS SECTION OUTPUT Profile #Pre-RDM-Superflo

E.G. Elev (ft)	1182.14	Element	Left OB	Channel	Right OB
Vel Head (ft)	2.15	Wt. n-Val.	0.020	0.035	0.020
W.S. Elev (ft)	1179.99	Reach Len. (ft)	425.00	404.51	390.00
Crit W.S. (ft)	1164.70	Flow Area (sq ft)	366.39	20440.99	431.73
E.G. Slope (ft/ft)	0.001228	Area (sq ft)	366.39	20440.99	2144.09
Q Total (cfs)	250000.00	Flow (cfs)	4296.16	240364.30	5339.57
Top Width (ft)	920.81	Top Width (ft)	27.94	634.71	258.16
Vel Total (ft/s)	11.77	Avg. Vel. (ft/s)	11.73	11.76	12.37
Max Chl Dpth (ft)	38.24	Hydr. Depth (ft)	13.11	32.21	13.78
Conv. Total (cfs)	7133165.0	Conv. (cfs)	122580.8	6858232.0	152352.1
Length Wtd. (ft)	404.52	Wetted Per. (ft)	38.34	920.08	41.71
Min Ch El (ft)	1141.75	Shear (lb/sq ft)	0.73	1.70	0.79
Alpha	1.00	Stream Power (lb/ft s)	8.59	20.03	9.82
Frctn Loss (ft)	0.65	Cum Volume (acre-ft)	51.54	1650.61	126.18
C & E Loss (ft)	0.09	Cum SA (acres)	8.57	62.03	18.85

Warning: Divided flow computed for this cross-section.
Warning: The cross-section end points had to be extended vertically for the computed water surface.
Warning: The velocity head has changed by more than 0.5 ft (0.15 m). This may indicate the need for additional cross sections.
Note: Multiple critical depths were found at this location. The critical depth with the lowest, valid, water surface was used.

CROSS SECTION OUTPUT Profile #Post-RDM-100yr

E.G. Elev (ft)	1175.55	Element	Left OB	Channel	Right OB
Vel Head (ft)	1.51	Wt. n-Val.	0.020	0.035	0.020
W.S. Elev (ft)	1174.04	Reach Len. (ft)	425.00	404.51	390.00
Crit W.S. (ft)	1160.82	Flow Area (sq ft)	218.97	16663.80	265.45
E.G. Slope (ft/ft)	0.001039	Area (sq ft)	218.97	16663.80	676.02
Q Total (cfs)	169000.00	Flow (cfs)	1988.72	164443.50	2567.76
Top Width (ft)	891.53	Top Width (ft)	21.61	634.71	235.22
Vel Total (ft/s)	9.86	Avg. Vel. (ft/s)	9.08	9.87	9.67
Max Chl Dpth (ft)	32.29	Hydr. Depth (ft)	10.14	26.25	10.81
Conv. Total (cfs)	5242784.0	Conv. (cfs)	61694.8	5101431.0	79658.1
Length Wtd. (ft)	404.49	Wetted Per. (ft)	29.65	860.57	32.70
Min Ch El (ft)	1141.75	Shear (lb/sq ft)	0.48	1.26	0.53
Alpha	1.00	Stream Power (lb/ft s)	4.35	12.40	5.09
Frctn Loss (ft)	0.55	Cum Volume (acre-ft)	28.42	1332.91	48.48
C & E Loss (ft)	0.06	Cum SA (acres)	3.03	62.03	9.51

Table 6
HEC-RAS Report

Warning: Divided flow computed for this cross-section.
Warning: The cross-section end points had to be extended vertically for the computed water surface.
Warning: The velocity head has changed by more than 0.5 ft (0.15 m). This may indicate the need for additional cross sections.
Note: Multiple critical depths were found at this location. The critical depth with the lowest, valid, water surface was used.

CROSS SECTION

RIVER: Salt River
REACH: SR 202 RS: 235

INPUT
Description:
Station Elevation Data num= 101

Sta	Elev	Sta	Elev	Sta	Elev	Sta	Elev	Sta	Elev
0	1204.2	31.28	1204.42	46.93	1204.78	77.61	1204.87	86.49	1205.01
107.08	1205.12	110.96	1205.97	118.59	1208.15	120.27	1208.45	120.86	1208.44
123.32	1208.92	125.1	1209.63	125.75	1210.05	127.33	1210.41	128.14	1210.46
131.99	1210.16	134.3	1210.28	135.4	1210.6	138.4	1210.63	141.02	1210.81
144.19	1211.2	150.21	1212.52	156.68	1211.59	160.01	1209.36	161.29	1208.68
163.43	1208.85	166.82	1207.34	178.78	1207.92	180.99	1209.12	182.39	1209.64
188.74	1209.03	189.38	1208.77	190.56	1208.56	191.79	1207.5	206.77	1198.67
207.53	1198.06	208.26	1197.62	210.47	1196.85	211.76	1196.24	215.21	1194.24
221.85	1191.49	231.76	1187.08	244.83	1186.5	249.97	1186.4	254.29	1186.08
256.94	1185.49	264.92	1185.01	294.23	1178.53	300.05	1177.5	311.55	1176.52
317.95	1181.01	326.27	1180.95	337.98	1171.93	344.32	1166.6	344.35	1166.58
359.93	1153.5	370.18	1152.8	379.3	1152.53	496.13	1152.21	499.43	1152.03
508.04	1150.1	514.96	1149.26	595.1	1140.51	623.81	1140.57	663.7	1140.39
726.9	1140.77	739.58	1140.69	762.94	1142.54	766.66	1142.98	802.24	1142.29
813.55	1143.19	834.26	1150.23	837.6	1151.66	845.53	1151.81	846.02	1151.56
856.85	1151.88	871.57	1151.89	893.13	1152.45	917.67	1152.87	936.57	1152.44
946.22	1151.95	947.08	1152.09	973.43	1152.28	978.92	1153.21	979.93	1154.12
979.97	1154.16	1007.96	1179.29	1022.58	1179.56	1036.43	1179.46	1060.74	1170.61
1077.39	1169.52	1078.58	1169.36	1082.07	1169.61	1100.63	1170.06	1125.68	1169.96
1135.59	1170.27	1144.67	1169.79	1167.95	1169.83	1180.81	1169.73	1198.09	1170.3
1201.92	1170.78								

Manning's n Values num= 3

Sta	n Val	Sta	n Val	Sta	n Val
0	.02	359.93	.035	973.43	.02

Bank Sta: Left	Right	Lengths: Left	Channel	Right	Coeff Contr.	Expan.
359.93	973.43	402	403.46	405	.1	.3

Ineffective Flow num= 2

Sta L	Sta R	Elev	Permanent
0	326.27	1182	F

Table 6
HEC-RAS Report

1007.96 1201.92 1182 F

Blocked Obstructions num= 6

Sta L	Sta R	Elev	Sta L	Sta R	Elev	Sta L	Sta R	Elev
472	482	1180	501.5	511.5	1180	549.5	559.5	1180
588.5	598.5	1180	636.5	646.5	1180	660.5	670.5	1180

CROSS SECTION OUTPUT Profile #Pre-RDM-100yr

E.G. Elev (ft)	1178.86	Element	Left OB	Channel	Right OB
Vel Head (ft)	2.58	Wt. n-Val.	0.020	0.035	0.020
W.S. Elev (ft)	1176.28	Reach Len. (ft)	402.00	403.46	405.00
Crit W.S. (ft)	1164.03	Flow Area (sq ft)	310.08	15994.74	425.44
E.G. Slope (ft/ft)	0.002033	Area (sq ft)	310.08	15994.74	1363.97
Q Total (cfs)	215000.00	Flow (cfs)	4381.74	203736.50	6881.76
Top Width (ft)	769.03	Top Width (ft)	27.60	553.50	187.93
Vel Total (ft/s)	12.85	Avg. Vel. (ft/s)	14.13	12.74	16.18
Max Chl Dpth (ft)	35.88	Hydr. Depth (ft)	11.24	28.90	13.65
Conv. Total (cfs)	4768315.0	Conv. (cfs)	97179.1	4518511.0	152625.1
Length Wtd. (ft)	403.46	Wetted Per. (ft)	35.79	931.84	40.10
Min Ch El (ft)	1140.40	Shear (lb/sq ft)	1.10	2.18	1.35
Alpha	1.01	Stream Power (lb/ft s)	15.54	27.75	21.78
Frctn Loss (ft)	0.95	Cum Volume (acre-ft)	36.17	1359.87	76.96
C & E Loss (ft)	0.05	Cum SA (acres)	4.05	56.51	14.21

Warning: Divided flow computed for this cross-section.
Warning: The cross-section end points had to be extended vertically for the computed water surface.
Note: Multiple critical depths were found at this location. The critical depth with the lowest, valid, water surface was used.

CROSS SECTION OUTPUT Profile #Pre-RDM-Superflo

E.G. Elev (ft)	1181.40	Element	Left OB	Channel	Right OB
Vel Head (ft)	3.01	Wt. n-Val.	0.020	0.035	0.020
W.S. Elev (ft)	1178.39	Reach Len. (ft)	402.00	403.46	405.00
Crit W.S. (ft)	1165.83	Flow Area (sq ft)	371.14	17161.47	493.63
E.G. Slope (ft/ft)	0.002225	Area (sq ft)	391.70	17161.47	1768.69
Q Total (cfs)	250000.00	Flow (cfs)	5816.09	235415.10	8768.78
Top Width (ft)	799.09	Top Width (ft)	49.52	553.50	196.07
Vel Total (ft/s)	13.87	Avg. Vel. (ft/s)	15.67	13.72	17.76
Max Chl Dpth (ft)	37.98	Hydr. Depth (ft)	12.23	31.01	14.72
Conv. Total (cfs)	5300399.0	Conv. (cfs)	123310.4	4991177.0	185912.1
Length Wtd. (ft)	403.46	Wetted Per. (ft)	39.24	957.13	43.25
Min Ch El (ft)	1140.40	Shear (lb/sq ft)	1.31	2.49	1.59
Alpha	1.01	Stream Power (lb/ft s)	20.58	34.16	28.16
Frctn Loss (ft)	1.04	Cum Volume (acre-ft)	47.85	1476.02	108.66
C & E Loss (ft)	0.06	Cum SA (acres)	8.19	56.51	16.81

Warning: Divided flow computed for this cross-section.

Table 6
HEC-RAS Report

Warning: The cross-section end points had to be extended vertically for the computed water surface.
Warning: The velocity head has changed by more than 0.5 ft (0.15 m). This may indicate the need for additional cross sections.
Warning: The energy loss was greater than 1.0 ft (0.3 m). between the current and previous cross section. This may indicate the need for additional cross sections.
Note: Multiple critical depths were found at this location. The critical depth with the lowest, valid, water surface was used.

CROSS SECTION OUTPUT Profile #Post-RDM-100yr

			Left OB	Channel	Right OB
E.G. Elev (ft)	1174.94	Element			
Vel Head (ft)	2.07	Wt. n-Val.	0.020	0.035	0.020
W.S. Elev (ft)	1172.87	Reach Len. (ft)	402.00	403.46	405.00
Crit W.S. (ft)	1161.62	Flow Area (sq ft)	223.53	14107.49	325.60
E.G. Slope (ft/ft)	0.001833	Area (sq ft)	223.53	14107.49	745.62
Q Total (cfs)	169000.00	Flow (cfs)	2700.54	161716.90	4582.59
Top Width (ft)	751.44	Top Width (ft)	23.17	553.50	174.77
Vel Total (ft/s)	11.53	Avg. Vel. (ft/s)	12.08	11.46	14.07
Max Chl Dpth (ft)	32.47	Hydr. Depth (ft)	9.65	25.49	11.89
Conv. Total (cfs)	3946828.0	Conv. (cfs)	63068.4	3776738.0	107021.9
Length Wtd. (ft)	403.46	Wetted Per. (ft)	30.20	890.92	34.99
Min Ch El (ft)	1140.40	Shear (lb/sq ft)	0.85	1.81	1.07
Alpha	1.00	Stream Power (lb/ft s)	10.23	20.78	14.99
Frctn Loss (ft)	0.86	Cum Volume (acre-ft)	26.26	1190.03	42.12
C & E Loss (ft)	0.04	Cum SA (acres)	2.81	56.51	7.67

Warning: Divided flow computed for this cross-section.
Warning: The cross-section end points had to be extended vertically for the computed water surface.
Note: Multiple critical depths were found at this location. The critical depth with the lowest, valid, water surface was used.

CROSS SECTION

RIVER: Salt River
REACH: SR 202 RS: 234

INPUT
Description:
Station Elevation Data num= 101

Sta	Elev	Sta	Elev	Sta	Elev	Sta	Elev	Sta	Elev
0	1192.02	1.82	1193.23	6.27	1193.46	25.12	1192.67	29.29	1192.66
30.63	1192.84	36.64	1193.19	58.06	1192.52	86.26	1192.81	107.79	1192.61
131.2	1192.04	150.41	1191.79	158.93	1191.47	169.48	1191.56	173.64	1191.42
186.54	1191.59	187.75	1191.93	188.99	1192.1	192.86	1192.06	198.96	1192.36
202.48	1192.74	210.45	1193.19	213.02	1193.44	238.26	1193.87	238.53	1194.66
239.88	1195.54	242.58	1196.66	247.29	1197.19	250.28	1198.82	252.32	1199.7
254.07	1200.66	258.17	1202.18	259.42	1202.29	262.54	1202.91	265.73	1203.03
270.58	1202.72	272.32	1202.13	274.3	1201.83	278.78	1204	289.24	1196.6

299.27	1189.77	314.73	1178.74	320.2	1175.24	325.82	1172.77	329.14	1173.45
341.28	1178.9	342.28	1179.11	356.95	1178.85	357.22	1178.76	362.95	1174.48
369.02	1169.94	394.17	1152.78	398.3	1152.44	429.65	1151.42	441.93	1151.81
469.11	1152.07	507.88	1151.84	512.01	1151.6	530.49	1151.63	538.75	1151.76
567.07	1147.07	577.18	1146.22	637.22	1139.08	706.68	1140	731.57	1139.83
778.54	1143.47	800.8	1144.45	850.46	1150.51	858.21	1150.79	876	1150.88
881.86	1150.79	898.98	1151.33	911.59	1151.12	934.23	1151.31	948.09	1151.88
977.32	1152.13	987.09	1151.96	990.26	1151.9	1003.76	1152.91	1003.93	1152.81
1005.6	1154.41	1012.23	1161.19	1029.43	1177.17	1031.1	1178.43	1044.33	1178.69
1067.91	1166.72	1073.44	1165.29	1080.91	1164.84	1096.06	1164.7	1103.86	1164.16
1104.29	1164.43	1130.52	1167.45	1130.96	1167.59	1169.24	1170.99	1185.15	1171.31
1193.26	1170.75	1203.96	1171.4	1215.75	1171.31	1223.21	1171.57	1231.26	1172.25
1239.59	1171.84								

Manning's n Values num= 3

Sta	n Val	Sta	n Val	Sta	n Val
0	.02	394.17	.035	1003.76	.02

Bank Sta: Left	Right	Lengths: Left	Channel	Right	Coeff Contr.	Expan.
394.17	1003.76	418	399.63	382	.1	.3

Ineffective Flow num= 2

Sta L	Sta R	Elev	Permanent
0	356.95	1179	F
1031.1	1239.59	1179	F

Blocked Obstructions num= 6

Sta L	Sta R	Elev	Sta L	Sta R	Elev	Sta L	Sta R	Elev
588	598	1180	617.5	627.5	1180	665.5	675.5	1180
704.5	714.5	1180	752.5	762.5	1180	779.5	789.5	1180

CROSS SECTION OUTPUT Profile #Pre-RDM-100yr

E.G. Elev (ft)	1177.87	Element	Left OB	Channel	Right OB
Vel Head (ft)	3.05	Wt. n-Val.	0.020	0.035	0.020
W.S. Elev (ft)	1174.81	Reach Len. (ft)	418.00	399.63	382.00
Crit W.S. (ft)	1164.76	Flow Area (sq ft)	354.26	14765.41	251.84
E.G. Slope (ft/ft)	0.002752	Area (sq ft)	366.74	14765.41	1364.45
Q Total (cfs)	215000.00	Flow (cfs)	6054.04	205063.00	3882.92
Top Width (ft)	803.03	Top Width (ft)	42.68	549.59	210.76
Vel Total (ft/s)	13.99	Avg. Vel. (ft/s)	17.09	13.89	15.42
Max Chl Dpth (ft)	35.73	Hydr. Depth (ft)	11.19	26.87	10.89
Conv. Total (cfs)	4098357.0	Conv. (cfs)	115402.8	3908938.0	74016.6
Length Wtd. (ft)	399.76	Wetted Per. (ft)	38.58	948.24	32.01
Min Ch El (ft)	1139.08	Shear (lb/sq ft)	1.58	2.68	1.35
Alpha	1.00	Stream Power (lb/ft s)	26.96	37.16	20.84
Frctn Loss (ft)	1.15	Cum Volume (acre-ft)	33.04	1217.42	64.27
C & E Loss (ft)	0.02	Cum SA (acres)	3.73	51.40	12.36

Warning: Divided flow computed for this cross-section.
Warning: The cross-section end points had to be extended vertically for the computed water surface.

Table 6
HEC-RAS Report

Warning: The energy loss was greater than 1.0 ft (0.3 m). between the current and previous cross section. This may indicate the need for additional cross sections.
Note: Multiple critical depths were found at this location. The critical depth with the lowest, valid, water surface was used.

CROSS SECTION OUTPUT Profile #Pre-RDM-Superflo

E.G. Elev (ft)	1180.31	Element	Left OB	Channel	Right OB
Vel Head (ft)	3.57	Wt. n-Val.	0.020	0.035	0.020
W.S. Elev (ft)	1176.73	Reach Len. (ft)	418.00	399.63	382.00
Crit W.S. (ft)	1166.49	Flow Area (sq ft)	417.49	15820.11	298.22
E.G. Slope (ft/ft)	0.003016	Area (sq ft)	458.60	15820.11	1774.52
Q Total (cfs)	250000.00	Flow (cfs)	7901.26	237006.10	5092.66
Top Width (ft)	819.02	Top Width (ft)	52.82	549.59	216.61
Vel Total (ft/s)	15.12	Avg. Vel. (ft/s)	18.93	14.98	17.08
Max Chl Dpth (ft)	37.65	Hydr. Depth (ft)	12.19	28.79	11.83
Conv. Total (cfs)	4552309.0	Conv. (cfs)	143875.9	4315700.0	92733.4
Length Wtd. (ft)	398.99	Wetted Per. (ft)	41.79	971.26	34.83
Min Ch El (ft)	1139.08	Shear (lb/sq ft)	1.88	3.07	1.61
Alpha	1.01	Stream Power (lb/ft s)	35.60	45.94	27.53
Frctn Loss (ft)	1.10	Cum Volume (acre-ft)	43.92	1323.28	92.19
C & E Loss (ft)	0.19	Cum SA (acres)	7.72	51.40	14.89

Warning: Divided flow computed for this cross-section.
Warning: The cross-section end points had to be extended vertically for the computed water surface.
Warning: The velocity head has changed by more than 0.5 ft (0.15 m). This may indicate the need for additional cross sections.
Warning: The energy loss was greater than 1.0 ft (0.3 m). between the current and previous cross section. This may indicate the need for additional cross sections.
Note: Multiple critical depths were found at this location. The critical depth with the lowest, valid, water surface was used.

CROSS SECTION OUTPUT Profile #Post-RDM-100yr

E.G. Elev (ft)	1174.04	Element	Left OB	Channel	Right OB
Vel Head (ft)	2.46	Wt. n-Val.	0.020	0.035	0.020
W.S. Elev (ft)	1171.58	Reach Len. (ft)	418.00	399.63	382.00
Crit W.S. (ft)	1162.30	Flow Area (sq ft)	258.80	12987.23	182.63
E.G. Slope (ft/ft)	0.002516	Area (sq ft)	258.80	12987.23	705.04
Q Total (cfs)	169000.00	Flow (cfs)	3792.86	162788.30	2418.82
Top Width (ft)	761.56	Top Width (ft)	27.34	549.59	184.63
Vel Total (ft/s)	12.59	Avg. Vel. (ft/s)	14.66	12.53	13.24
Max Chl Dpth (ft)	32.50	Hydr. Depth (ft)	9.47	23.63	9.29
Conv. Total (cfs)	3369340.0	Conv. (cfs)	75617.9	3245498.0	48223.8
Length Wtd. (ft)	399.73	Wetted Per. (ft)	33.18	909.41	27.26
Min Ch El (ft)	1139.08	Shear (lb/sq ft)	1.22	2.24	1.05
Alpha	1.00	Stream Power (lb/ft s)	17.95	28.12	13.94
Frctn Loss (ft)	1.04	Cum Volume (acre-ft)	24.04	1064.56	35.37
C & E Loss (ft)	0.02	Cum SA (acres)	2.58	51.40	6.00

Table 6
HEC-RAS Report

Warning: Divided flow computed for this cross-section.
Warning: The energy loss was greater than 1.0 ft (0.3 m). between the current and previous cross section. This may indicate the need for additional cross sections.
Note: Multiple critical depths were found at this location. The critical depth with the lowest, valid, water surface was used.

CROSS SECTION

RIVER: Salt River
REACH: SR 202 RS: 233

INPUT
Description:
Station Elevation Data num= 98

Sta	Elev	Sta	Elev	Sta	Elev	Sta	Elev	Sta	Elev
0	1174.7	19.85	1176.02	21.56	1176.28	35.3	1176.2	59.24	1176.28
85.81	1176.22	103.51	1176.28	136.33	1176.16	164.81	1176.11	186.85	1176.06
191.63	1176.1	238.06	1176.06	239.2	1176.02	255.32	1175.82	256.02	1175.58
257.62	1175.25	258.92	1175.06	262.03	1175.01	268.78	1174.91	273.97	1174.41
279.07	1174.81	286.03	1174.74	289.33	1174.37	294.23	1174.04	294.8	1174.09
297.11	1174.5	300.59	1175.42	305.83	1176.58	312.82	1176.64	331.77	1176.47
331.8	1176.59	336.39	1173.05	342.92	1168.01	346.42	1165.31	362.69	1152.6
376.17	1152.08	379.97	1152.17	419.47	1151.98	460.48	1151.42	463.67	1151.34
495.13	1151.38	498.53	1151.44	499.02	1151.28	515.63	1149.35	529.45	1148.25
556.5	1144.6	568.51	1144.25	635.23	1141.86	675.27	1140.35	719.38	1139.58
752.15	1141.03	784.87	1142.68	828.56	1146.96	835.23	1147.33	870.3	1149.98
877.3	1150.66	903.15	1150.61	914.14	1150.64	945.98	1150.62	953.84	1150.61
964.26	1150.22	964.82	1150.19	966.93	1150.77	967.54	1151.42	991.56	1175.69
1004.08	1175.9	1022.24	1163.41	1038.41	1162.22	1038.85	1162.31	1044.21	1162.85
1053.17	1162.86	1058.08	1163.42	1064.68	1164.24	1070.45	1164.87	1074.12	1166.01
1075.51	1166.51	1077.33	1167.11	1090.86	1168.95	1097.38	1170.48	1098.07	1170.45
1108.2	1171.02	1113.62	1171.28	1123.32	1171.64	1124.8	1171.79	1143.65	1171.84
1143.73	1171.86	1145.33	1171.63	1145.9	1171.68	1146.11	1171.66	1148.63	1171.1
1149.01	1170.89	1149.07	1170.9	1149.37	1170.65	1170.46	1169.07	1176.29	1169.3
1179.97	1169.61	1185.93	1170.42	1241.28	1171.69				

Manning's n Values num= 3

Sta	n Val	Sta	n Val	Sta	n Val
0	.02	362.69	.035	966.93	.02

Bank Sta: Left	Right	Lengths: Left	Channel	Right	Coeff Contr.	Expan.
362.69	966.93	390	391.95	394	.1	.3

Ineffective Flow num= 1

Sta L	Sta R	Elev	Permanent
991.56	1241.28	1176	F

Blocked Obstructions num= 6

Sta L	Sta R	Elev	Sta L	Sta R	Elev	Sta L	Sta R	Elev

612	622	1180	641.5	651.5	1180	689.5	699.5	1180
728.5	738.5	1180	776.5	786.5	1180	803.5	813.5	1180

CROSS SECTION OUTPUT Profile #Pre-RDM-100yr

E.G. Elev (ft)	1176.69	Element	Left OB	Channel	Right OB
Vel Head (ft)	3.28	Wt. n-Val.	0.020	0.035	0.020
W.S. Elev (ft)	1173.41	Reach Len. (ft)	390.00	391.95	394.00
Crit W.S. (ft)	1164.09	Flow Area (sq ft)	277.69	14271.43	252.90
E.G. Slope (ft/ft)	0.003008	Area (sq ft)	277.69	14271.43	1335.86
Q Total (cfs)	215000.00	Flow (cfs)	4597.90	206298.70	4103.36
Top Width (ft)	826.96	Top Width (ft)	26.77	544.24	255.95
Vel Total (ft/s)	14.53	Avg. Vel. (ft/s)	16.56	14.46	16.23
Max Chl Dpth (ft)	33.83	Hydr. Depth (ft)	10.37	26.22	11.30
Conv. Total (cfs)	3919944.0	Conv. (cfs)	83830.2	3761300.0	74813.7
Length Wtd. (ft)	391.96	Wetted Per. (ft)	33.90	922.68	31.83
Min Ch El (ft)	1139.58	Shear (lb/sq ft)	1.54	2.90	1.49
Alpha	1.00	Stream Power (lb/ft s)	25.47	41.99	24.21
Frctn Loss (ft)	1.06	Cum Volume (acre-ft)	29.95	1084.22	52.43
C & E Loss (ft)	0.14	Cum SA (acres)	3.40	46.39	10.31

Warning: Divided flow computed for this cross-section.
Warning: The cross-section end points had to be extended vertically for the computed water surface.
Warning: The energy loss was greater than 1.0 ft (0.3 m). between the current and previous cross section. This may indicate the need for additional cross sections.
Note: Multiple critical depths were found at this location. The critical depth with the lowest, valid, water surface was used.

CROSS SECTION OUTPUT Profile #Pre-RDM-Superflo

E.G. Elev (ft)	1179.02	Element	Left OB	Channel	Right OB
Vel Head (ft)	2.93	Wt. n-Val.	0.020	0.035	0.020
W.S. Elev (ft)	1176.09	Reach Len. (ft)	390.00	391.95	394.00
Crit W.S. (ft)	1165.88	Flow Area (sq ft)	433.67	15727.97	2033.15
E.G. Slope (ft/ft)	0.002509	Area (sq ft)	433.67	15727.97	2033.15
Q Total (cfs)	250000.00	Flow (cfs)	6030.05	216525.60	27444.35
Top Width (ft)	979.48	Top Width (ft)	160.89	544.24	274.35
Vel Total (ft/s)	13.74	Avg. Vel. (ft/s)	13.90	13.77	13.50
Max Chl Dpth (ft)	36.51	Hydr. Depth (ft)	2.70	28.90	7.41
Conv. Total (cfs)	4991193.0	Conv. (cfs)	120388.6	4322884.0	547920.2
Length Wtd. (ft)	392.05	Wetted Per. (ft)	170.77	954.80	294.30
Min Ch El (ft)	1139.58	Shear (lb/sq ft)	0.40	2.58	1.08
Alpha	1.00	Stream Power (lb/ft s)	5.53	35.52	14.61
Frctn Loss (ft)	1.01	Cum Volume (acre-ft)	39.64	1178.56	75.50
C & E Loss (ft)	0.03	Cum SA (acres)	6.69	46.39	12.74

Warning: Multiple water surfaces were found that could balance the energy equation. The program selected the water surface whose main channel velocity head was the closest to the previously

computed cross section.
Warning: Divided flow computed for this cross-section.
Warning: The cross-section end points had to be extended vertically for the computed water surface.
Warning: The energy loss was greater than 1.0 ft (0.3 m). between the current and previous cross section. This may indicate the need for additional cross sections.
Note: Multiple critical depths were found at this location. The critical depth with the lowest, valid, water surface was used.

CROSS SECTION OUTPUT Profile #Post-RDM-100yr

E.G. Elev (ft)	1172.98	Element	Left OB	Channel	Right OB
Vel Head (ft)	2.62	Wt. n-Val.	0.020	0.035	0.020
W.S. Elev (ft)	1170.36	Reach Len. (ft)	390.00	391.95	394.00
Crit W.S. (ft)	1161.61	Flow Area (sq ft)	202.07	12611.27	189.25
E.G. Slope (ft/ft)	0.002704	Area (sq ft)	202.07	12611.27	660.18
Q Total (cfs)	169000.00	Flow (cfs)	2853.72	163503.50	2642.80
Top Width (ft)	703.37	Top Width (ft)	22.81	544.24	136.32
Vel Total (ft/s)	13.00	Avg. Vel. (ft/s)	14.12	12.96	13.96
Max Chl Dpth (ft)	30.78	Hydr. Depth (ft)	8.86	23.17	9.78
Conv. Total (cfs)	3250152.0	Conv. (cfs)	54881.8	3144445.0	50825.5
Length Wtd. (ft)	391.96	Wetted Per. (ft)	28.91	886.08	27.54
Min Ch El (ft)	1139.58	Shear (lb/sq ft)	1.18	2.40	1.16
Alpha	1.00	Stream Power (lb/ft s)	16.66	31.15	16.20
Frctn Loss (ft)	0.94	Cum Volume (acre-ft)	21.82	947.13	29.39
C & E Loss (ft)	0.12	Cum SA (acres)	2.34	46.39	4.60

Warning: Divided flow computed for this cross-section.
Warning: The energy loss was greater than 1.0 ft (0.3 m). between the current and previous cross section. This may indicate the need for additional cross sections.
Note: Multiple critical depths were found at this location. The critical depth with the lowest, valid, water surface was used.

CROSS SECTION

RIVER: Salt River
REACH: SR 202 RS: 232

INPUT
Description:
Station Elevation Data num= 97

Sta	Elev	Sta	Elev	Sta	Elev	Sta	Elev	Sta	Elev
0	1177.72	3.58	1177.88	20.75	1178.15	21.93	1178.13	27.22	1178.2
30.88	1178.31	33.48	1178.41	39.69	1178.61	47.56	1178.97	60.76	1179.61
80.19	1179.66	106.37	1179.54	107.1	1179.51	112.87	1179.52	132.36	1179.47
151.96	1179.35	157.62	1179.34	163.69	1179.37	177.96	1179.27	182.88	1179.19
194.73	1179.17	208.14	1178.88	212.97	1179	232.27	1178.88	234.86	1178.72
236.29	1178.6	241.16	1179.88	242.31	1180.09	243.1	1180.28	245.14	1180.64
245.93	1180.42	246.37	1180.23	248.31	1179.51	249.59	1178.87	249.99	1178.76

251.29	1178.48	251.95	1178.37	254.13	1177.9	257.41	1177.54	260.64	1177.4
262.84	1177.22	265.08	1177.09	268.86	1176.77	272.57	1176.64	283.35	1176.4
286.24	1176.49	303.33	1175.73	306.35	1174.91	307.16	1174.72	319.3	1174.58
321.6	1174.5	326.7	1170.54	328.22	1169.37	347.13	1154.69	351.91	1150.95
353.43	1150.89	355.25	1150.94	415.96	1151.17	433.79	1150.92	446.05	1150.89
466.57	1150.46	480.51	1150.39	482.68	1149.74	518.24	1145.38	518.52	1145.4
520.31	1145.14	568.03	1144.74	574.52	1144.21	652.66	1137.53	670.58	1137.56
753.06	1136.9	772.93	1139.4	843.04	1147.88	872.24	1148.65	944.64	1149.97
967.18	1150.79	982.3	1150.81	986.8	1151.86	991.18	1153.14	1013.43	1175.8
1014.45	1175.81	1025.15	1175.7	1027.82	1173.78	1033.86	1169.79	1045.21	1162.16
1062.59	1162	1079.89	1162.12	1089.66	1162.75	1097.12	1163.45	1103.52	1164.03
1118.79	1166.42	1130.87	1166.92	1131.46	1166.97	1131.79	1167.03	1144.95	1168.8
1145.75	1168.92	1289.27	1172.21						

Manning's n Values num= 3

Sta	n Val	Sta	n Val	Sta	n Val
0	.02	351.91	.035	982.3	.02

Bank Sta: Left	Right	Lengths: Left	Channel	Right	Coeff Contr.	Expan.
351.91	982.3	400	406.03	412	.1	.3

Ineffective Flow num= 1

Sta L	Sta R	Elev	Permanent
1013.43	1289.27	1176	F

Blocked Obstructions num= 6

Sta L	Sta R	Elev	Sta L	Sta R	Elev	Sta L	Sta R	Elev
636	646	1180	665.5	675.5	1180	713.5	723.5	1180
752.5	762.5	1180	800.5	810.5	1180	827.5	837.5	1180

CROSS SECTION OUTPUT Profile #Pre-RDM-100yr

E.G. Elev (ft)	1175.49	Element	Left OB	Channel	Right OB
Vel Head (ft)	2.82	Wt. n-Val.	0.020	0.035	0.020
W.S. Elev (ft)	1172.68	Reach Len. (ft)	400.00	406.03	412.00
Crit W.S. (ft)	1162.13	Flow Area (sq ft)	303.32	15349.31	371.79
E.G. Slope (ft/ft)	0.002439	Area (sq ft)	303.32	15349.31	1611.05
Q Total (cfs)	215000.00	Flow (cfs)	4659.43	203937.40	6403.16
Top Width (ft)	886.19	Top Width (ft)	27.96	570.39	287.84
Vel Total (ft/s)	13.42	Avg. Vel. (ft/s)	15.36	13.29	17.22
Max Chl Dpth (ft)	35.77	Hydr. Depth (ft)	10.85	26.91	13.25
Conv. Total (cfs)	4353222.0	Conv. (cfs)	94342.0	4129232.0	129648.3
Length Wtd. (ft)	406.07	Wetted Per. (ft)	35.41	962.30	36.56
Min Ch El (ft)	1136.91	Shear (lb/sq ft)	1.30	2.43	1.55
Alpha	1.01	Stream Power (lb/ft s)	20.04	32.27	26.67
Frctn Loss (ft)	0.87	Cum Volume (acre-ft)	27.35	950.96	39.11
C & E Loss (ft)	0.14	Cum SA (acres)	3.15	41.37	7.85

Warning: Divided flow computed for this cross-section.
Warning: The cross-section end points had to be extended vertically for the computed water surface.
Warning: The energy loss was greater than 1.0 ft (0.3 m). between the current and previous cross

section. This may indicate the need for additional cross sections.
Note: Multiple critical depths were found at this location. The critical depth with the lowest, valid, water surface was used.

CROSS SECTION OUTPUT Profile #Pre-RDM-Superflo

E.G. Elev (ft)	1177.97	Element	Left OB	Channel	Right OB
Vel Head (ft)	3.27	Wt. n-Val.	0.020	0.035	0.020
W.S. Elev (ft)	1174.70	Reach Len. (ft)	400.00	406.03	412.00
Crit W.S. (ft)	1163.81	Flow Area (sq ft)	363.66	16505.54	430.70
E.G. Slope (ft/ft)	0.002667	Area (sq ft)	363.66	16505.54	2199.61
Q Total (cfs)	250000.00	Flow (cfs)	5141.88	236719.00	8139.09
Top Width (ft)	906.51	Top Width (ft)	43.33	570.39	292.79
Vel Total (ft/s)	14.45	Avg. Vel. (ft/s)	14.14	14.34	18.90
Max Chl Dpth (ft)	37.80	Hydr. Depth (ft)	8.39	28.94	14.33
Conv. Total (cfs)	4840795.0	Conv. (cfs)	99563.2	4583633.0	157598.7
Length Wtd. (ft)	406.08	Wetted Per. (ft)	51.41	986.62	39.40
Min Ch El (ft)	1136.91	Shear (lb/sq ft)	1.18	2.79	1.82
Alpha	1.01	Stream Power (lb/ft s)	16.65	39.95	34.39
Frctn Loss (ft)	0.95	Cum Volume (acre-ft)	36.07	1033.54	56.35
C & E Loss (ft)	0.16	Cum SA (acres)	5.78	41.37	10.18

Warning: Divided flow computed for this cross-section.
Warning: The cross-section end points had to be extended vertically for the computed water surface.
Warning: The velocity head has changed by more than 0.5 ft (0.15 m). This may indicate the need for additional cross sections.
Warning: The energy loss was greater than 1.0 ft (0.3 m). between the current and previous cross section. This may indicate the need for additional cross sections.
Note: Multiple critical depths were found at this location. The critical depth with the lowest, valid, water surface was used.

CROSS SECTION OUTPUT Profile #Post-RDM-100yr

E.G. Elev (ft)	1171.92	Element	Left OB	Channel	Right OB
Vel Head (ft)	2.22	Wt. n-Val.	0.020	0.035	0.020
W.S. Elev (ft)	1169.70	Reach Len. (ft)	400.00	406.03	412.00
Crit W.S. (ft)	1159.73	Flow Area (sq ft)	225.77	13650.95	292.59
E.G. Slope (ft/ft)	0.002155	Area (sq ft)	225.77	13650.95	902.57
Q Total (cfs)	169000.00	Flow (cfs)	2954.23	161669.30	4376.46
Top Width (ft)	765.38	Top Width (ft)	24.12	570.39	170.87
Vel Total (ft/s)	11.93	Avg. Vel. (ft/s)	13.08	11.84	14.96
Max Chl Dpth (ft)	32.79	Hydr. Depth (ft)	9.36	23.93	11.64
Conv. Total (cfs)	3640883.0	Conv. (cfs)	63644.9	3482953.0	94285.1
Length Wtd. (ft)	406.07	Wetted Per. (ft)	30.55	926.57	32.39
Min Ch El (ft)	1136.91	Shear (lb/sq ft)	0.99	1.98	1.22
Alpha	1.00	Stream Power (lb/ft s)	13.01	23.47	18.17
Frctn Loss (ft)	0.77	Cum Volume (acre-ft)	19.91	828.98	22.32
C & E Loss (ft)	0.11	Cum SA (acres)	2.13	41.37	3.21

Table 6
HEC-RAS Report

Warning: Divided flow computed for this cross-section.
Note: Multiple critical depths were found at this location. The critical depth with the lowest, valid, water surface was used.

CROSS SECTION

RIVER: Salt River
REACH: SR 202 RS: 231

INPUT
Description:
Station Elevation Data num= 95

Sta	Elev	Sta	Elev	Sta	Elev	Sta	Elev	Sta	Elev
0	1178.83	12.43	1178.78	16.79	1178.67	26.54	1178.6	28.8	1178.58
33.91	1178.44	38.07	1178.39	38.97	1178.35	48.81	1178.24	49.78	1178.21
53.45	1178.15	64.32	1178.07	64.99	1178.11	66.22	1178.07	72.06	1177.96
76.61	1177.95	78.72	1177.9	87.64	1177.85	90.22	1177.86	92.44	1177.81
99	1177.76	101.23	1177.77	102.82	1177.73	127.99	1177.51	134.06	1177.55
135.02	1177.53	135.6	1177.48	137.93	1177.47	140.15	1177.37	143.4	1177.32
144.45	1177.23	149.25	1177.08	150.79	1177.07	154.8	1177.49	158.48	1178.13
158.84	1177.63	160.48	1175	162.73	1174.73	168.26	1174.45	171.25	1174.29
173.85	1174.35	173.88	1174.67	173.92	1174.46	179.93	1169.65	198.3	1154.94
202.69	1151.6	206.86	1151.55	224.85	1150.92	278.02	1150.91	314.01	1150.58
317.19	1150.2	352.31	1146.29	355.24	1148.62	364.04	1148.04	498.82	1138.86
572.59	1140.26	579.46	1140.6	656.72	1141.91	737.65	1144.21	742.53	1144.67
750.57	1145.35	822.18	1148.74	843.27	1149.87	848.45	1150.15	857	1150.22
873.91	1150.44	885.98	1150.4	893.36	1150.42	901.47	1150.49	905.26	1150.53
928.91	1174.11	931.55	1174.42	939.21	1174.66	950.31	1168.14	957.43	1165.43
962.68	1165.85	979.47	1166.72	984.99	1167.3	988.55	1167.72	1004	1170.74
1018.02	1173.29	1027.15	1175	1027.19	1174.86	1028.84	1174.27	1029.15	1174.3
1031.37	1173.74	1044.84	1173.79	1045.35	1173.69	1073.91	1169.79	1076.12	1169.61
1077.7	1169.41	1078.23	1169.29	1078.79	1169.21	1079.3	1169.18	1235.38	1172.76

Manning's n Values num= 3

Sta	n Val	Sta	n Val	Sta	n Val
0	.02	202.69	.035	901.47	.02

Bank Sta: Left	Right	Lengths: Left	Channel	Right	Coeff Contr.	Expan.
202.69	901.47	375	405.87	440	.1	.3

Ineffective Flow num= 1

Sta L	Sta R	Elev	Permanent
939.21	1235.38	1175	F

Blocked Obstructions num= 6

Sta L	Sta R	Elev	Sta L	Sta R	Elev	Sta L	Sta R	Elev
566	576	1180	595.5	605.5	1180	643.5	653.5	1180
682.5	692.5	1180	730.5	740.5	1180	757.5	767.5	1180

CROSS SECTION OUTPUT Profile #Pre-RDM-100yr

Table 6
HEC-RAS Report

E.G. Elev (ft)	1174.48	Element	Left OB	Channel	Right OB
Vel Head (ft)	2.35	Wt. n-Val.	0.020	0.035	0.020
W.S. Elev (ft)	1172.13	Reach Len. (ft)	375.00	405.87	440.00
Crit W.S. (ft)	1160.87	Flow Area (sq ft)	267.34	16904.23	315.94
E.G. Slope (ft/ft)	0.001903	Area (sq ft)	267.34	16904.23	818.67
Q Total (cfs)	215000.00	Flow (cfs)	3493.19	207015.00	4491.82
Top Width (ft)	909.42	Top Width (ft)	25.86	638.78	244.78
Vel Total (ft/s)	12.29	Avg. Vel. (ft/s)	13.07	12.25	14.22
Max Chl Dpth (ft)	33.27	Hydr. Depth (ft)	10.34	26.46	12.41
Conv. Total (cfs)	4928925.0	Conv. (cfs)	80082.3	4745867.0	102975.9
Length Wtd. (ft)	405.95	Wetted Per. (ft)	33.02	994.04	34.38
Min Ch El (ft)	1138.86	Shear (lb/sq ft)	0.96	2.02	1.09
Alpha	1.00	Stream Power (lb/ft s)	12.57	24.74	15.52
Frctn Loss (ft)	0.81	Cum Volume (acre-ft)	24.73	800.64	27.62
C & E Loss (ft)	0.01	Cum SA (acres)	2.91	35.74	5.33

Warning: Divided flow computed for this cross-section.
Note: Multiple critical depths were found at this location. The critical depth with the lowest, valid, water surface was used.

CROSS SECTION OUTPUT Profile #Pre-RDM-Superflo

E.G. Elev (ft)	1176.86	Element	Left OB	Channel	Right OB
Vel Head (ft)	2.73	Wt. n-Val.	0.020	0.035	0.020
W.S. Elev (ft)	1174.13	Reach Len. (ft)	375.00	405.87	440.00
Crit W.S. (ft)	1162.46	Flow Area (sq ft)	321.54	18181.48	368.85
E.G. Slope (ft/ft)	0.002064	Area (sq ft)	321.54	18181.48	1390.02
Q Total (cfs)	250000.00	Flow (cfs)	4653.43	239617.00	5729.59
Top Width (ft)	982.71	Top Width (ft)	28.36	638.78	315.57
Vel Total (ft/s)	13.25	Avg. Vel. (ft/s)	14.47	13.18	15.53
Max Chl Dpth (ft)	35.27	Hydr. Depth (ft)	11.34	28.46	13.36
Conv. Total (cfs)	5502440.0	Conv. (cfs)	102420.9	5273912.0	126106.8
Length Wtd. (ft)	405.95	Wetted Per. (ft)	36.22	1018.04	37.36
Min Ch El (ft)	1138.86	Shear (lb/sq ft)	1.14	2.30	1.27
Alpha	1.00	Stream Power (lb/ft s)	16.56	30.33	19.76
Frctn Loss (ft)	0.87	Cum Volume (acre-ft)	32.93	871.88	39.38
C & E Loss (ft)	0.01	Cum SA (acres)	5.45	35.74	7.30

Warning: Divided flow computed for this cross-section.
Warning: The cross-section end points had to be extended vertically for the computed water surface.
Note: Multiple critical depths were found at this location. The critical depth with the lowest, valid, water surface was used.

CROSS SECTION OUTPUT Profile #Post-RDM-100yr

E.G. Elev (ft)	1171.04	Element	Left OB	Channel	Right OB
Vel Head (ft)	1.86	Wt. n-Val.	0.020	0.035	0.020

Table 6
HEC-RAS Report

W.S. Elev (ft)	1169.18	Reach Len. (ft)	375.00	405.87	440.00
Crit W.S. (ft)	1158.63	Flow Area (sq ft)	196.53	15021.18	245.26
E.G. Slope (ft/ft)	0.001683	Area (sq ft)	196.53	15021.18	353.95
Q Total (cfs)	169000.00	Flow (cfs)	2180.02	163800.70	3019.33
Top Width (ft)	731.15	Top Width (ft)	22.18	638.78	70.19
Vel Total (ft/s)	10.93	Avg. Vel. (ft/s)	11.09	10.90	12.31
Max Chl Dpth (ft)	30.32	Hydr. Depth (ft)	8.86	23.52	10.90
Conv. Total (cfs)	4119955.0	Conv. (cfs)	53145.4	3993203.0	73606.6
Length Wtd. (ft)	405.96	Wetted Per. (ft)	28.30	958.67	30.21
Min Ch El (ft)	1138.86	Shear (lb/sq ft)	0.73	1.65	0.85
Alpha	1.00	Stream Power (lb/ft s)	8.09	17.95	10.50
Frctn Loss (ft)	0.73	Cum Volume (acre-ft)	17.97	695.35	16.38
C & E Loss (ft)	0.02	Cum SA (acres)	1.92	35.74	2.07

Warning: Divided flow computed for this cross-section.
Note: Multiple critical depths were found at this location. The critical depth with the lowest, valid, water surface was used.

CROSS SECTION

RIVER: Salt River
REACH: SR 202 RS: 230

INPUT
Description:
Station Elevation Data num= 99

Sta	Elev	Sta	Elev	Sta	Elev	Sta	Elev	Sta	Elev
0	1173.76	57.34	1174.13	60.29	1174.41	74.58	1175	88.64	1175.78
101.99	1176.18	108.04	1176	108.43	1176.08	108.51	1176.28	112.7	1176.68
116.45	1176.59	122.66	1176.64	122.9	1176.71	123.98	1176.63	138.51	1176.62
155.11	1176.87	177.12	1177.06	191.46	1176.98	236.06	1177	272.52	1176.32
282.61	1176.29	292.18	1176.13	305.26	1176.38	308.81	1176.08	315.74	1176.22
318.7	1176.19	324.52	1176.41	346.8	1176.55	373.26	1175.92	382.6	1175.01
392.63	1174.6	399.84	1174.62	411.43	1174.84	425.96	1174.67	430.67	1174.25
439.74	1173.6	446.21	1173.3	453.68	1173.15	461.26	1172.08	464.4	1171.88
467.74	1171.93	472.83	1173.31	476.21	1174	480.59	1174.35	496.88	1174.1
496.98	1174.19	505.62	1167.29	505.67	1167.26	511.29	1162.74	524.18	1150.97
565.77	1150.71	617.42	1150.63	659.05	1150.07	677.83	1149.17	690.93	1145.77
703.57	1144.88	743.69	1144.2	817.37	1146.79	845.18	1146.91	888.98	1144.17
900.3	1144	993.45	1144.6	998.45	1144.45	1013.01	1144.68	1071.15	1144.63
1104.28	1146.31	1122.03	1147.61	1146.85	1150.02	1193.34	1150.51	1209.13	1150.4
1232.62	1150.71	1249.02	1150.76	1271.07	1151.94	1276.76	1152.15	1278.67	1152.14
1284.84	1152.37	1285.49	1152.41	1307.77	1174.22	1310.85	1174.47	1320.86	1174.73
1323.68	1174.6	1338.3	1172.93	1355.86	1173.59	1358.76	1173.84	1360.71	1174.11
1362.41	1174.16	1367.43	1173.87	1373.81	1173.97	1412.78	1174.7	1414.54	1173.97
1416.69	1173.69	1418.06	1173.66	1418.54	1173.58	1420.64	1173.7	1489.64	1174.06
1496.12	1174.36	1497.37	1174.52	1504.84	1173.82	1542.61	1173.97		

Table 6
HEC-RAS Report

Manning's n Values num= 3

Sta	n Val	Sta	n Val	Sta	n Val
0	.02	524.18	.035	1284.84	.02

Bank Sta: Left	Right	Lengths: Left	Channel	Right	Coeff Contr.	Expan.
524.18	1284.84	420	385.93	365	.1	.3

Ineffective Flow num= 1

Sta L	Sta R	Elev	Permanent
0	496.88	1176	F

Blocked Obstructions num= 6

Sta L	Sta R	Elev	Sta L	Sta R	Elev	Sta L	Sta R	Elev
946	956	1180	975.5	985.5	1180	1023.5	1033.5	1180
1062.5	1072.5	1180	1110.5	1120.5	1180	1137.5	1147.5	1180

CROSS SECTION OUTPUT Profile #Pre-RDM-100yr

			Left OB	Channel	Right OB
E.G. Elev (ft)	1173.66	Element			
Vel Head (ft)	2.48	Wt. n-Val.	0.020	0.035	0.020
W.S. Elev (ft)	1171.17	Reach Len. (ft)	420.00	385.93	365.00
Crit W.S. (ft)	1161.81	Flow Area (sq ft)	228.81	16575.31	191.96
E.G. Slope (ft/ft)	0.002116	Area (sq ft)	228.81	16575.31	191.96
Q Total (cfs)	215000.00	Flow (cfs)	2968.05	209633.90	2398.03
Top Width (ft)	743.89	Top Width (ft)	23.42	700.66	19.81
Vel Total (ft/s)	12.65	Avg. Vel. (ft/s)	12.97	12.65	12.49
Max Chl Dpth (ft)	27.17	Hydr. Depth (ft)	9.77	23.66	9.69
Conv. Total (cfs)	4673901.0	Conv. (cfs)	64522.6	4557247.0	52131.0
Length Wtd. (ft)	386.04	Wetted Per. (ft)	30.94	1005.75	27.47
Min Ch El (ft)	1144.00	Shear (lb/sq ft)	0.98	2.18	0.92
Alpha	1.00	Stream Power (lb/ft s)	12.67	27.53	11.53
Frctn Loss (ft)	0.61	Cum Volume (acre-ft)	22.60	644.66	22.51
C & E Loss (ft)	0.26	Cum SA (acres)	2.69	29.50	4.00

Warning: Divided flow computed for this cross-section.
Warning: The velocity head has changed by more than 0.5 ft (0.15 m). This may indicate the need for additional cross sections.
Note: Multiple critical depths were found at this location. The critical depth with the lowest, valid, water surface was used.

CROSS SECTION OUTPUT Profile #Pre-RDM-Superflo

			Left OB	Channel	Right OB
E.G. Elev (ft)	1175.98	Element			
Vel Head (ft)	2.85	Wt. n-Val.	0.020	0.035	0.020
W.S. Elev (ft)	1173.13	Reach Len. (ft)	420.00	385.93	365.00
Crit W.S. (ft)	1163.28	Flow Area (sq ft)	277.05	17946.95	233.40
E.G. Slope (ft/ft)	0.002247	Area (sq ft)	291.27	17946.95	233.40
Q Total (cfs)	250000.00	Flow (cfs)	3944.83	242862.20	3193.00
Top Width (ft)	773.63	Top Width (ft)	44.18	700.66	28.79
Vel Total (ft/s)	13.54	Avg. Vel. (ft/s)	14.24	13.53	13.68
Max Chl Dpth (ft)	29.13	Hydr. Depth (ft)	10.71	25.61	8.11

Table 6
HEC-RAS Report

Conv. Total (cfs)	5274072.0	Conv. (cfs)	83221.4	5123490.0	67360.5
Length Wtd. (ft)	386.07	Wetted Per. (ft)	34.08	1029.24	37.26
Min Ch El (ft)	1144.00	Shear (lb/sq ft)	1.14	2.45	0.88
Alpha	1.00	Stream Power (lb/ft s)	16.24	33.10	12.02
Frctn Loss (ft)	0.65	Cum Volume (acre-ft)	30.29	703.57	31.18
C & E Loss (ft)	0.30	Cum SA (acres)	5.14	29.50	5.56

Warning: Divided flow computed for this cross-section.
Warning: The velocity head has changed by more than 0.5 ft (0.15 m). This may indicate the need for additional cross sections.
Note: Multiple critical depths were found at this location. The critical depth with the lowest, valid, water surface was used.

CROSS SECTION OUTPUT Profile #Post-RDM-100yr

E.G. Elev (ft)	1170.29	Element	Left OB	Channel	Right OB
Vel Head (ft)	2.01	Wt. n-Val.	0.020	0.035	0.020
W.S. Elev (ft)	1168.28	Reach Len. (ft)	420.00	385.93	365.00
Crit W.S. (ft)	1159.71	Flow Area (sq ft)	166.39	14551.42	138.99
E.G. Slope (ft/ft)	0.001946	Area (sq ft)	166.39	14551.42	138.99
Q Total (cfs)	169000.00	Flow (cfs)	1864.71	165638.70	1496.60
Top Width (ft)	737.32	Top Width (ft)	19.80	700.66	16.86
Vel Total (ft/s)	11.38	Avg. Vel. (ft/s)	11.21	11.38	10.77
Max Chl Dpth (ft)	24.28	Hydr. Depth (ft)	8.40	20.77	8.24
Conv. Total (cfs)	3831082.0	Conv. (cfs)	42271.3	3754884.0	33926.7
Length Wtd. (ft)	386.01	Wetted Per. (ft)	26.31	971.09	23.34
Min Ch El (ft)	1144.00	Shear (lb/sq ft)	0.77	1.82	0.72
Alpha	1.00	Stream Power (lb/ft s)	8.61	20.72	7.79
Frctn Loss (ft)	0.56	Cum Volume (acre-ft)	16.41	557.58	13.89
C & E Loss (ft)	0.21	Cum SA (acres)	1.73	29.50	1.63

Warning: Divided flow computed for this cross-section.
Warning: The velocity head has changed by more than 0.5 ft (0.15 m). This may indicate the need for additional cross sections.
Note: Multiple critical depths were found at this location. The critical depth with the lowest, valid, water surface was used.

CROSS SECTION

RIVER: Salt River
REACH: SR 202 RS: 229

INPUT
Description:
Station Elevation Data num= 99

Sta	Elev	Sta	Elev	Sta	Elev	Sta	Elev	Sta	Elev
0	1172.65	33.67	1172.54	50.76	1172.21	62.85	1172.93	72.96	1172.86

Table 6
HEC-RAS Report

112.16	1173.93	119.21	1173.85	141.41	1173.68	160.1	1173.88	236.33	1173.98
270.98	1173.94	282.29	1173.74	300.99	1173.73	308.89	1172.48	317.67	1170.83
322.6	1171.49	332.92	1174.02	346.96	1173.85	350.12	1173.49	350.29	1173.62
350.62	1174.09	350.63	1174	356.96	1169.49	357.01	1169.45	363.82	1164.6
367.33	1161.95	380.92	1152.03	438.28	1150.74	510.6	1150.12	557.27	1148.39
569.47	1148.06	628.53	1145.86	672.18	1143.46	724.1	1142.07	757.74	1142.66
808.53	1143.73	846.02	1144.65	893.97	1145.13	948.62	1144.76	1013.67	1144.81
1035.82	1144.66	1088.8	1143.51	1098.28	1143.47	1118.6	1145.55	1165.18	1149.47
1189.61	1150.96	1204.88	1151.01	1222.76	1151.41	1238.86	1151.63	1276.94	1153.14
1279.16	1153.34	1280.33	1153.35	1280.37	1153.35	1284.83	1153.36	1287.89	1153.73
1291.56	1154.03	1314.64	1175.21	1317.3	1175.78	1327.82	1175.72	1330.44	1176.05
1343.68	1182.97	1346.42	1184.19	1348.7	1185.07	1352.55	1183.49	1367.74	1183.92
1371.05	1183.94	1374.57	1184.74	1377.86	1184.22	1390.67	1176.25	1397.7	1173.79
1402.65	1172.89	1406.58	1172.87	1417.66	1173.13	1429.15	1173.18	1432.18	1174.12
1437.72	1174.42	1437.77	1175.86	1440.66	1175.53	1445.79	1175.86	1445.85	1175.06
1448.11	1175.86	1448.13	1174.64	1449.01	1173.56	1450.48	1173.29	1452.36	1173.19
1455.22	1172.75	1456.92	1172.62	1457.17	1172.83	1457.53	1172.91	1485.61	1173.35
1503.11	1173	1515.68	1172.87	1524.91	1173.08	1538.43	1173.14	1582	1173.89
1629.84	1174.17	1633.46	1174.39	1636.97	1174.05	1644.45	1174.08		

Manning's n Values num= 3

Sta	n Val	Sta	n Val	Sta	n Val
0	.02	380.92	.035	1280.37	.02

Bank Sta: Left	Right	Lengths: Left	Channel	Right	Coeff Contr.	Expan.
380.92	1280.37	450	397.68	360	.1	.3

Ineffective Flow num= 2

Sta L	Sta R	Elev	Permanent
0	350.62	1176	F
1317.3	1644.45	1176	F

Blocked Obstructions num= 6

Sta L	Sta R	Elev	Sta L	Sta R	Elev	Sta L	Sta R	Elev
980	990	1180	1009.5	1019.5	1180	1057.5	1067.5	1180
1096.5	1106.5	1180	1144.5	1154.5	1180	1171.5	1181.5	1180

CROSS SECTION OUTPUT Profile #Pre-RDM-100yr

E.G. Elev (ft)	1172.79	Element	Left OB	Channel	Right OB
Vel Head (ft)	1.61	Wt. n-Val.	0.020	0.035	0.020
W.S. Elev (ft)	1171.17	Reach Len. (ft)	450.00	397.68	360.00
Crit W.S. (ft)	1159.46	Flow Area (sq ft)	250.73	20495.49	356.93
E.G. Slope (ft/ft)	0.001219	Area (sq ft)	251.47	20495.49	356.93
Q Total (cfs)	215000.00	Flow (cfs)	2537.27	208234.30	4228.47
Top Width (ft)	900.00	Top Width (ft)	30.68	839.45	29.87
Vel Total (ft/s)	10.19	Avg. Vel. (ft/s)	10.12	10.16	11.85
Max Chl Dpth (ft)	29.10	Hydr. Depth (ft)	9.53	24.42	11.95
Conv. Total (cfs)	6157451.0	Conv. (cfs)	72665.6	5963685.0	121100.5
Length Wtd. (ft)	399.35	Wetted Per. (ft)	32.54	1142.26	36.58
Min Ch El (ft)	1142.07	Shear (lb/sq ft)	0.59	1.37	0.74
Alpha	1.00	Stream Power (lb/ft s)	5.93	13.88	8.80

Table 6
HEC-RAS Report

Frctn Loss (ft)	0.46	Cum Volume (acre-ft)	20.28	480.44	20.21
C & E Loss (ft)	0.03	Cum SA (acres)	2.43	22.67	3.79

Warning: Divided flow computed for this cross-section.
Note: Multiple critical depths were found at this location. The critical depth with the lowest, valid, water surface was used.

CROSS SECTION OUTPUT Profile #Pre-RDM-Superflo

E.G. Elev (ft)	1175.03	Element	Left OB	Channel	Right OB
Vel Head (ft)	1.85	Wt. n-Val.	0.020	0.035	0.020
W.S. Elev (ft)	1173.18	Reach Len. (ft)	450.00	397.68	360.00
Crit W.S. (ft)	1160.75	Flow Area (sq ft)	306.42	22181.36	419.12
E.G. Slope (ft/ft)	0.001292	Area (sq ft)	382.63	22181.36	433.49
Q Total (cfs)	250000.00	Flow (cfs)	3411.26	241188.00	5400.76
Top Width (ft)	1106.99	Top Width (ft)	138.81	839.45	128.74
Vel Total (ft/s)	10.91	Avg. Vel. (ft/s)	11.13	10.87	12.89
Max Chl Dpth (ft)	31.11	Hydr. Depth (ft)	10.52	26.42	13.07
Conv. Total (cfs)	6954570.0	Conv. (cfs)	94895.3	6709435.0	150239.7
Length Wtd. (ft)	399.40	Wetted Per. (ft)	36.01	1166.36	39.55
Min Ch El (ft)	1142.07	Shear (lb/sq ft)	0.69	1.53	0.85
Alpha	1.00	Stream Power (lb/ft s)	7.64	16.68	11.02
Frctn Loss (ft)	0.48	Cum Volume (acre-ft)	27.04	525.81	28.39
C & E Loss (ft)	0.04	Cum SA (acres)	4.26	22.67	4.90

Warning: Divided flow computed for this cross-section.
Warning: The cross-section end points had to be extended vertically for the computed water surface.
Note: Multiple critical depths were found at this location. The critical depth with the lowest, valid, water surface was used.

CROSS SECTION OUTPUT Profile #Post-RDM-100yr

E.G. Elev (ft)	1169.52	Element	Left OB	Channel	Right OB
Vel Head (ft)	1.30	Wt. n-Val.	0.020	0.035	0.020
W.S. Elev (ft)	1168.22	Reach Len. (ft)	450.00	397.68	360.00
Crit W.S. (ft)	1157.59	Flow Area (sq ft)	179.08	18014.85	273.43
E.G. Slope (ft/ft)	0.001123	Area (sq ft)	179.08	18014.85	273.43
Q Total (cfs)	169000.00	Flow (cfs)	1556.44	164610.40	2833.18
Top Width (ft)	888.28	Top Width (ft)	22.18	839.45	26.65
Vel Total (ft/s)	9.15	Avg. Vel. (ft/s)	8.69	9.14	10.36
Max Chl Dpth (ft)	26.15	Hydr. Depth (ft)	8.07	21.46	10.26
Conv. Total (cfs)	5043075.0	Conv. (cfs)	46445.2	4912086.0	84543.9
Length Wtd. (ft)	399.28	Wetted Per. (ft)	27.46	1106.80	32.21
Min Ch El (ft)	1142.07	Shear (lb/sq ft)	0.46	1.14	0.60
Alpha	1.00	Stream Power (lb/ft s)	3.97	10.43	6.17
Frctn Loss (ft)	0.43	Cum Volume (acre-ft)	14.74	413.31	12.16
C & E Loss (ft)	0.01	Cum SA (acres)	1.53	22.67	1.44

Table 6
HEC-RAS Report

Warning: Divided flow computed for this cross-section.
Note: Multiple critical depths were found at this location. The critical depth with the lowest, valid, water surface was used.

CROSS SECTION

RIVER: Salt River
REACH: SR 202 RS: 228

INPUT
Description:
Station Elevation Data num= 100

Sta	Elev	Sta	Elev	Sta	Elev	Sta	Elev	Sta	Elev
0	1170.84	5.02	1170.93	15.17	1170.7	17.14	1170.69	25.81	1170.98
39.56	1171.62	46.42	1171.74	54.42	1171.99	63.44	1172.86	70.07	1173.13
77.39	1171.82	89.42	1174.13	94.64	1174.04	105.15	1173.74	105.78	1173.9
105.95	1174.09	114.06	1167.83	114.12	1167.78	115.17	1166.97	138.44	1150.41
173.61	1149	186.17	1148.67	239.83	1149.22	275.95	1149.77	296.36	1149.88
312.57	1149.38	356.02	1149.02	373.3	1148.92	377.24	1148.95	386.39	1148.78
511.76	1147.36	595.14	1146.06	620.02	1146.14	699.09	1146.85	770.91	1147.89
841.36	1148.31	902.27	1148.85	938.81	1150.63	983.22	1151.75	1005.84	1151.07
1009.72	1150.83	1021.73	1150.96	1093.5	1151.2	1118.46	1151.87	1127.03	1151.96
1175.35	1153.9	1175.39	1153.902	1192.62	1154.58	1202.19	1162.87	1207.78	1167.84
1213.01	1172.57	1215.38	1174.77	1217.74	1175.13	1228.96	1175.27	1244.51	1175.58
1258.14	1175.46	1278.1	1175.86	1283.56	1176.57	1286.73	1176.91	1290.35	1177.35
1294.96	1178.69	1300.83	1181.63	1304.1	1182.43	1307.51	1182.52	1313.61	1182.61
1324.36	1182.89	1332.31	1182.66	1337.95	1183.23	1340.65	1182.27	1347.54	1177.77
1354.26	1174.29	1356.35	1173.79	1358.65	1173.78	1359.05	1173.74	1361.93	1172.92
1362.93	1172.71	1364.38	1172.18	1366.21	1171.73	1369.21	1171.16	1375.63	1170.67
1387.98	1169.98	1403.84	1169.67	1414.87	1169.7	1419.2	1169.65	1429.99	1169.66
1435.9	1169.44	1437.95	1169.31	1443.46	1169.1	1513.85	1168.75	1535.01	1168.7
1535.06	1168.66	1536.24	1168.58	1543.83	1168.3	1551.14	1168.66	1560.73	1168.65
1601.95	1169.2	1609.11	1169.4	1613.2	1169.31	1616.31	1169.42	1620.11	1171.11

Manning's n Values num= 3

Sta	n Val	Sta	n Val	Sta	n Val
0	.02	173.61	.035	1192.62	.02

Bank Sta: Left	Right	Lengths: Left	Channel	Right	Coeff Contr.	Expan.
173.61	1192.62	422	378.69	375	.1	.3

Ineffective Flow num= 2

Sta L	Sta R	Elev	Permanent
0	105.95	1176	F
1217.74	1620.11	1176	F

Blocked Obstructions num= 6

Sta L	Sta R	Elev	Sta L	Sta R	Elev	Sta L	Sta R	Elev
948	958	1180	977.5	987.5	1180	1025.5	1035.5	1180
1064.5	1074.5	1180	1112.5	1122.5	1180	1139.5	1149.5	1180

Table 6
HEC-RAS Report

CROSS SECTION OUTPUT Profile #Pre-RDM-100yr

E.G. Elev (ft)	1172.30	Element	Left OB	Channel	Right OB
Vel Head (ft)	1.52	Wt. n-Val.	0.020	0.035	0.020
W.S. Elev (ft)	1170.78	Reach Len. (ft)	422.00	378.69	375.00
Crit W.S. (ft)	1160.29	Flow Area (sq ft)	1032.10	21052.58	150.52
E.G. Slope (ft/ft)	0.001072	Area (sq ft)	1032.55	21052.58	550.86
Q Total (cfs)	215000.00	Flow (cfs)	15097.63	198675.00	1227.33
Top Width (ft)	1294.40	Top Width (ft)	71.76	959.01	263.63
Vel Total (ft/s)	9.67	Avg. Vel. (ft/s)	14.63	9.44	8.15
Max Chl Dpth (ft)	24.72	Hydr. Depth (ft)	16.29	21.95	8.17
Conv. Total (cfs)	6566217.0	Conv. (cfs)	461089.8	6067644.0	37483.4
Length Wtd. (ft)	381.08	Wetted Per. (ft)	70.00	1190.21	24.53
Min Ch El (ft)	1146.06	Shear (lb/sq ft)	0.99	1.18	0.41
Alpha	1.04	Stream Power (lb/ft s)	14.44	11.17	3.35
Frctn Loss (ft)	0.49	Cum Volume (acre-ft)	13.65	290.79	16.46
C & E Loss (ft)	0.06	Cum SA (acres)	1.90	14.46	2.58

Warning: Divided flow computed for this cross-section.
Warning: The velocity head has changed by more than 0.5 ft (0.15 m). This may indicate the need for additional cross sections.
Note: Multiple critical depths were found at this location. The critical depth with the lowest, valid, water surface was used.

CROSS SECTION OUTPUT Profile #Pre-RDM-Superflo

E.G. Elev (ft)	1174.52	Element	Left OB	Channel	Right OB
Vel Head (ft)	1.72	Wt. n-Val.	0.020	0.035	0.020
W.S. Elev (ft)	1172.80	Reach Len. (ft)	422.00	378.69	375.00
Crit W.S. (ft)	1161.52	Flow Area (sq ft)	1162.57	22986.98	189.91
E.G. Slope (ft/ft)	0.001103	Area (sq ft)	1257.86	22986.98	1101.43
Q Total (cfs)	250000.00	Flow (cfs)	18108.37	230193.60	1698.01
Top Width (ft)	1376.63	Top Width (ft)	139.38	959.01	278.24
Vel Total (ft/s)	10.27	Avg. Vel. (ft/s)	15.58	10.01	8.94
Max Chl Dpth (ft)	26.74	Hydr. Depth (ft)	17.62	23.97	9.20
Conv. Total (cfs)	7527756.0	Conv. (cfs)	545261.5	6931366.0	51128.9
Length Wtd. (ft)	381.20	Wetted Per. (ft)	73.30	1214.42	27.53
Min Ch El (ft)	1146.06	Shear (lb/sq ft)	1.09	1.30	0.47
Alpha	1.05	Stream Power (lb/ft s)	17.01	13.05	4.25
Frctn Loss (ft)	0.49	Cum Volume (acre-ft)	18.57	319.62	22.04
C & E Loss (ft)	0.06	Cum SA (acres)	2.82	14.46	3.22

Warning: Divided flow computed for this cross-section.
Warning: The cross-section end points had to be extended vertically for the computed water surface.
Warning: The velocity head has changed by more than 0.5 ft (0.15 m). This may indicate the need for additional cross sections.
Note: Multiple critical depths were found at this location. The critical depth with the lowest, valid,

water surface was used.

CROSS SECTION OUTPUT Profile #Post-RDM-100yr

E.G. Elev (ft)	1169.07	Element	Left OB	Channel	Right OB
Vel Head (ft)	1.26	Wt. n-Val.	0.020	0.035	0.020
W.S. Elev (ft)	1167.81	Reach Len. (ft)	422.00	378.69	375.00
Crit W.S. (ft)	1158.62	Flow Area (sq ft)	849.61	18204.70	100.71
E.G. Slope (ft/ft)	0.001044	Area (sq ft)	849.61	18204.70	100.71
Q Total (cfs)	169000.00	Flow (cfs)	11299.07	156993.20	707.77
Top Width (ft)	1033.67	Top Width (ft)	59.53	959.01	15.13
Vel Total (ft/s)	8.82	Avg. Vel. (ft/s)	13.30	8.62	7.03
Max Chl Dpth (ft)	21.75	Hydr. Depth (ft)	14.27	18.98	6.66
Conv. Total (cfs)	5231473.0	Conv. (cfs)	349767.8	4859795.0	21909.5
Length Wtd. (ft)	380.90	Wetted Per. (ft)	65.14	1154.58	20.10
Min Ch El (ft)	1146.06	Shear (lb/sq ft)	0.85	1.03	0.33
Alpha	1.04	Stream Power (lb/ft s)	11.30	8.86	2.29
Frctn Loss (ft)	0.49	Cum Volume (acre-ft)	9.43	247.98	10.62
C & E Loss (ft)	0.06	Cum SA (acres)	1.11	14.46	1.27

Warning: Divided flow computed for this cross-section.
Warning: The velocity head has changed by more than 0.5 ft (0.15 m). This may indicate the need for additional cross sections.
Note: Multiple critical depths were found at this location. The critical depth with the lowest, valid, water surface was used.

CROSS SECTION

RIVER: Salt River
REACH: SR 202 RS: 123.55

INPUT
Description:
Station Elevation Data num= 101

Sta	Elev	Sta	Elev	Sta	Elev	Sta	Elev	Sta	Elev
0	1173.25	20.08	1173.16	28.7	1172.31	40.42	1173.76	43.3	1174.43
47.89	1174.46	47.93	1174.62	52.26	1174.64	55.3	1175.04	67.25	1175.39
71.05	1175.29	80.74	1175.78	109.52	1176.28	115.74	1176.54	152.73	1177.17
168.22	1177.74	178.71	1177.79	181.86	1178.04	190.14	1178.14	192.48	1178.55
208.28	1179.17	226.19	1179.52	253.96	1180.45	255.79	1180.68	256.99	1180.46
284.66	1180.86	291.24	1180.25	312.14	1179.75	332.51	1179.89	338.28	1179.14
342.04	1179.82	345.86	1180.02	350.88	1177.24	354.8	1175.65	357.11	1175.06
359.27	1174.04	366.1	1173.41	382.56	1173.13	399.78	1174.28	403.91	1174.22
427.02	1165.03	427.1	1165	464.42	1152.41	468.85	1151.95	476.7	1151.59
520.03	1150.79	534.12	1150.32	641.27	1149.99	670.83	1150.68	725.88	1150.32
792.21	1149.16	844.03	1149.07	890.9	1148.46	1021.11	1147.99	1113.69	1148.1
1181.12	1150.44	1232.58	1151.08	1252.91	1150.99	1310.04	1154.34	1323.36	1154.78
1364.2	1154.26	1394.54	1155.21	1400.54	1159.38	1404.41	1161.78	1407.14	1162.49

```
 1461.3  1171.5 1487.92 1172.33 1487.98 1172.34 1504.75 1172.86 1514.38 1166.52
1517.11 1165.19 1524.26 1165.04 1528.53 1165.23 1544.36 1165.36 1554.34 1166.97
 1555.5 1167.41 1562.29 1171.48  1569.4 1173.88  1573.6 1174.49 1577.54 1174.56
1582.57 1174.15 1588.77 1173.04 1593.05 1172.73 1594.49 1172.23 1602.82 1171.75
1606.78  1171.2    1608 1171.42 1610.59 1171.37 1617.11 1172.18  1623.5 1173.35
1640.77 1177.67 1643.67 1178.68 1663.82 1179.07 1675.69 1178.98  1692.6 1178.07
1701.22 1177.24 1715.21 1174.95 1719.61 1174.46 1741.91 1172.84 1760.22 1172.66
1799.83  1172.7

Manning's n Values          num=       3
     Sta   n Val     Sta   n Val     Sta   n Val
       0     .02   476.7    .035 1394.54     .02

Bank Sta: Left   Right    Lengths: Left Channel   Right     Coeff Contr.   Expan.
         476.7 1394.54            120.43  120.79   122.1             .3       .5
Ineffective Flow      num=       2
   Sta L   Sta R    Elev  Permanent
       0  284.66    1181       F
 1504.74 1799.83    1181       F
Blocked Obstructions      num=       6
   Sta L   Sta R    Elev   Sta L   Sta R    Elev   Sta L   Sta R    Elev
    1340    1350    1180  1369.5  1379.5    1180  1417.5  1427.5    1180
  1456.5  1466.5    1180  1504.5  1514.5    1180  1531.5  1541.5    1180

CROSS SECTION OUTPUT  Profile #Pre-RDM-100yr

  E.G. Elev (ft)          1171.76    Element                  Left OB    Channel   Right OB
  Vel Head (ft)              2.11    Wt. n-Val.                0.020      0.035      0.020
  W.S. Elev (ft)          1169.64    Reach Len. (ft)           22.00      22.00      22.00
  Crit W.S. (ft)          1162.09    Flow Area (sq ft)        652.96   17594.19     237.44
  E.G. Slope (ft/ft)     0.001540    Area (sq ft)             652.96   17594.19     366.07
  Q Total (cfs)         215000.00     Flow (cfs)              8929.27  203950.70    2120.01
  Top Width (ft)          1039.44    Top Width (ft)            61.28     897.84      80.32
  Vel Total (ft/s)          11.63    Avg. Vel. (ft/s)          13.68      11.59       8.93
  Max Chl Dpth (ft)         21.65    Hydr. Depth (ft)          10.66      19.60       5.21
  Conv. Total (cfs)     5479566.0     Conv. (cfs)            227574.6  5197960.0    54031.4
  Length Wtd. (ft)          22.00    Wetted Per. (ft)          64.27     958.44      57.32
  Min Ch El (ft)          1147.99    Shear (lb/sq ft)           0.98       1.76       0.40
  Alpha                      1.01    Stream Power (lb/ft s)    13.35      20.45       3.55
  Frctn Loss (ft)            0.04    Cum Volume (acre-ft)       5.48     122.80      12.52
  C & E Loss (ft)            0.11    Cum SA (acres)             1.26       6.39       1.09

Warning: Divided flow computed for this cross-section.
Note:    Multiple critical depths were found at this location.  The critical depth with the lowest, valid,
         energy was used.

CROSS SECTION OUTPUT  Profile #Pre-RDM-Superflo

  E.G. Elev (ft)          1173.97    Element                  Left OB    Channel   Right OB
```

Vel Head (ft)	2.32	Wt. n-Val.	0.020	0.035	0.020
W.S. Elev (ft)	1171.64	Reach Len. (ft)	22.00	22.00	22.00
Crit W.S. (ft)	1163.36	Flow Area (sq ft)	780.67	19391.51	338.08
E.G. Slope (ft/ft)	0.001502	Area (sq ft)	780.67	19391.51	541.66
Q Total (cfs)	250000.00	Flow (cfs)	11253.65	235575.40	3170.95
Top Width (ft)	1063.61	Top Width (ft)	66.31	897.84	99.45
Vel Total (ft/s)	12.19	Avg. Vel. (ft/s)	14.42	12.15	9.38
Max Chl Dpth (ft)	23.65	Hydr. Depth (ft)	11.77	21.60	6.51
Conv. Total (cfs)	6451166.0	Conv. (cfs)	290396.6	6078944.0	81825.3
Length Wtd. (ft)	22.00	Wetted Per. (ft)	69.68	966.45	68.72
Min Ch El (ft)	1147.99	Shear (lb/sq ft)	1.05	1.88	0.46
Alpha	1.01	Stream Power (lb/ft s)	15.14	22.85	4.33
Frctn Loss (ft)	0.04	Cum Volume (acre-ft)	8.69	135.42	14.97
C & E Loss (ft)	0.12	Cum SA (acres)	1.82	6.39	1.59

Warning: Divided flow computed for this cross-section.
Note: Multiple critical depths were found at this location. The critical depth with the lowest, valid, energy was used.

CROSS SECTION OUTPUT Profile #Post-RDM-100yr

E.G. Elev (ft)	1168.52	Element	Left OB	Channel	Right OB
Vel Head (ft)	1.84	Wt. n-Val.	0.020	0.035	0.020
W.S. Elev (ft)	1166.68	Reach Len. (ft)	22.00	22.00	22.00
Crit W.S. (ft)	1160.32	Flow Area (sq ft)	482.38	14933.00	128.70
E.G. Slope (ft/ft)	0.001647	Area (sq ft)	482.38	14933.00	162.15
Q Total (cfs)	169000.00	Flow (cfs)	6094.39	161847.80	1057.83
Top Width (ft)	1007.48	Top Width (ft)	53.83	897.84	55.81
Vel Total (ft/s)	10.87	Avg. Vel. (ft/s)	12.63	10.84	8.22
Max Chl Dpth (ft)	18.69	Hydr. Depth (ft)	8.96	16.63	4.63
Conv. Total (cfs)	4164022.0	Conv. (cfs)	150160.7	3987797.0	26064.1
Length Wtd. (ft)	22.00	Wetted Per. (ft)	56.25	946.58	33.33
Min Ch El (ft)	1147.99	Shear (lb/sq ft)	0.88	1.62	0.40
Alpha	1.00	Stream Power (lb/ft s)	11.14	17.58	3.26
Frctn Loss (ft)	0.05	Cum Volume (acre-ft)	2.98	103.94	9.48
C & E Loss (ft)	0.10	Cum SA (acres)	0.56	6.39	0.97

Warning: Divided flow computed for this cross-section.
Note: Multiple critical depths were found at this location. The critical depth with the lowest, valid, energy was used.

BRIDGE

RIVER: Salt River
REACH: SR 202 RS: 123.075

INPUT

Table 6
HEC-RAS Report

Description: McClintock Drive Bridge over Salt River
Distance from Upstream XS = 22
Deck/Roadway Width = 89
Weir Coefficient = 2.6
Upstream Deck/Roadway Coordinates
num= 11

Sta	Hi Cord	Lo Cord	Sta	Hi Cord	Lo Cord	Sta	Hi Cord	Lo Cord
356	1184.96	1175.45	472.5	1187.27	1177.76	590.5	1189.1	1179.59
708.5	1190.41	1180.9	826.5	1191.23	1181.72	944.5	1191.45	1181.94
1062.5	1191.19	1181.68	1180.5	1190.4	1180.89	1298.5	1189.1	1179.59
1416.5	1187.27	1177.76	1533	1184.96	1175.45			

Upstream Bridge Cross Section Data
Station Elevation Data num= 101

Sta	Elev	Sta	Elev	Sta	Elev	Sta	Elev	Sta	Elev
0	1173.25	20.08	1173.16	28.7	1172.31	40.42	1173.76	43.3	1174.43
47.89	1174.46	47.93	1174.62	52.26	1174.64	55.3	1175.04	67.25	1175.39
71.05	1175.29	80.74	1175.78	109.52	1176.28	115.74	1176.54	152.73	1177.17
168.22	1177.74	178.71	1177.79	181.86	1178.04	190.14	1178.14	192.48	1178.55
208.28	1179.17	226.19	1179.52	253.96	1180.45	255.79	1180.68	256.99	1180.46
284.66	1180.86	291.24	1180.25	312.14	1179.75	332.51	1179.89	338.28	1179.14
342.04	1179.82	345.86	1180.02	350.88	1177.24	354.8	1175.65	357.11	1175.06
359.27	1174.04	366.1	1173.41	382.56	1173.13	399.78	1174.28	403.91	1174.22
427.02	1165.03	427.1	1165	464.42	1152.41	468.85	1151.95	476.7	1151.59
520.03	1150.79	534.12	1150.32	641.27	1149.99	670.83	1150.68	725.88	1150.32
792.21	1149.16	844.03	1149.07	890.9	1148.46	1021.11	1147.99	1113.69	1148.1
1181.12	1150.44	1232.58	1151.08	1252.91	1150.99	1310.04	1154.34	1323.36	1154.78
1364.2	1154.26	1394.54	1155.21	1400.54	1159.38	1404.41	1161.78	1407.14	1162.49
1461.3	1171.5	1487.92	1172.33	1487.98	1172.34	1504.75	1172.86	1514.38	1166.52
1517.11	1165.19	1524.26	1165.04	1528.53	1165.23	1544.36	1165.36	1554.34	1166.97
1555.5	1167.41	1562.29	1171.48	1569.4	1173.88	1573.6	1174.49	1577.54	1174.56
1582.57	1174.15	1588.77	1173.04	1593.05	1172.73	1594.49	1172.23	1602.82	1171.75
1606.78	1171.2	1608	1171.42	1610.59	1171.37	1617.11	1172.18	1623.5	1173.35
1640.77	1177.67	1643.67	1178.68	1663.82	1179.07	1675.69	1178.98	1692.6	1178.07
1701.22	1177.24	1715.21	1174.95	1719.61	1174.46	1741.91	1172.84	1760.22	1172.66
1799.83	1172.7								

Manning's n Values num= 3

Sta	n Val	Sta	n Val	Sta	n Val
0	.02	476.7	.035	1394.54	.02

Bank Sta: Left	Right	Coeff Contr.	Expan.
476.7	1394.54	.3	.5

Ineffective Flow num= 2

Sta L	Sta R	Elev	Permanent
0	284.66	1181	F
1504.74	1799.83	1181	F

Blocked Obstructions num= 6

Sta L	Sta R	Elev	Sta L	Sta R	Elev	Sta L	Sta R	Elev
1340	1350	1180	1369.5	1379.5	1180	1417.5	1427.5	1180

1456.5	1466.5	1180	1504.5	1514.5	1180	1531.5	1541.5	1180

Downstream Deck/Roadway Coordinates
num= 11

Sta	Hi Cord	Lo Cord	Sta	Hi Cord	Lo Cord	Sta	Hi Cord	Lo Cord
352	1184.96	1175.45	468.5	1187.27	1177.76	586.5	1189.1	1179.59
704.5	1190.41	1180.9	822.5	1191.23	1181.72	940.5	1191.45	1181.94
1058.5	1191.19	1181.68	1176.5	1190.4	1180.89	1294.5	1189.1	1179.59
1412.5	1187.27	1177.76	1529	1184.96	1175.45			

Downstream Bridge Cross Section Data
Station Elevation Data num= 97

Sta	Elev	Sta	Elev	Sta	Elev	Sta	Elev	Sta	Elev
0	1170.34	4.16	1169.84	7.36	1170.04	8.34	1169.89	8.99	1169.93
13.62	1168.51	16.34	1168.56	16.79	1168.69	24.3	1168.83	30.69	1169.3
32.74	1169.35	38.93	1169.2	58.2	1169.15	69.72	1169.5	75.61	1169.36
78.4	1169.48	90.9	1169.62	93.07	1169.73	99.91	1170.48	100.74	1170.47
102.01	1170.67	102.46	1170.65	104.13	1171	104.6	1170.92	105.43	1171.15
108.9	1171.54	111.26	1171.35	122.66	1171.44	123.39	1171.21	126.89	1171.52
155.06	1171.51	175.5	1171.29	177.95	1171.35	219.47	1171.29	235.03	1171.49
261.94	1171.94	284.29	1172.29	291.55	1172.61	305.96	1173.02	310.67	1172.6
316.04	1172.41	319.93	1172.7	324.87	1172.8	332.38	1173.18	334.44	1173.07
337.4	1173.34	341.44	1173.51	348.48	1173.33	352.23	1172.96	353.66	1172.69
371.93	1172.66	384.98	1172.98	399.18	1173.8	408.05	1173.88	414.34	1172.6
427.2	1167.21	437.18	1163.63	437.26	1163.6	452.4	1158.18	458.42	1156.35
461.02	1155.37	474.75	1154.5	478.93	1152.45	481.65	1152.69	484.52	1151.79
673.19	1149.12	781.5	1148.42	1111.44	1147.94	1126.98	1148.48	1215.03	1148.41
1221.68	1148.8	1249.15	1149.7	1253.63	1150.78	1385.33	1158.05	1435.75	1165.34
1473.86	1171.33	1495.2	1172.94	1505.38	1174.48	1522.94	1177.12	1532.34	1180.85
1533.64	1180.88	1533.74	1181.93	1534.62	1181.8	1544.06	1181.78	1544.18	1181.86
1560.26	1181.47	1570.53	1181.37	1572.99	1181.24	1606.16	1180.5	1762.11	1176.12
1766.71	1176.06	1772.09	1175.82	1774.97	1175.81	1782.06	1175.54	1786.6	1175.56
1792.01	1175.31	1799.83	1175.17						

Manning's n Values num= 3

Sta	n Val	Sta	n Val	Sta	n Val
0	.02	484.52	.035	1215.03	.02

Bank Sta: Left	Right	Coeff Contr.	Expan.
484.52	1215.03	.3	.5

Ineffective Flow num= 1

Sta L	Sta R	Elev	Permanent
0	408.05	1174	F

Blocked Obstructions num= 6

Sta L	Sta R	Elev	Sta L	Sta R	Elev	Sta L	Sta R	Elev
1346	1356	1180	1375.5	1385.5	1180	1423.5	1433.5	1180
1462.5	1472.5	1180	1510.5	1520.5	1180	1537.5	1547.5	1180

Upstream Embankment side slope = 0 horiz. to 1.0 vertical
Downstream Embankment side slope = 0 horiz. to 1.0 vertical

Table 6
HEC-RAS Report

```
Maximum allowable submergence for weir flow =      .95
Elevation at which weir flow begins         =
Energy head used in spillway design         =
Spillway height used in design              =
Weir crest shape                            = Broad Crested

Number of Piers =  9

Pier Data
Pier Station     Upstream=   472.5    Downstream=   468.5
Upstream     num=       2
    Width   Elev    Width   Elev
       6       0       6 1184.51
Downstream     num=       2
    Width   Elev    Width   Elev
       6       0       6 1184.51

Pier Data
Pier Station     Upstream=   590.5    Downstream=   586.5
Upstream     num=       2
    Width   Elev    Width   Elev
       6       0       6 1186.34
Downstream     num=       2
    Width   Elev    Width   Elev
       6       0       6 1186.34

Pier Data
Pier Station     Upstream=   708.5    Downstream=   704.5
Upstream     num=       2
    Width   Elev    Width   Elev
       6       0       6 1187.65
Downstream     num=       2
    Width   Elev    Width   Elev
       6       0       6 1187.65

Pier Data
Pier Station     Upstream=   826.5    Downstream=   822.5
Upstream     num=       2
    Width   Elev    Width   Elev
       6       0       6 1188.47
Downstream     num=       2
    Width   Elev    Width   Elev
       6       0       6 1188.47

Pier Data
Pier Station     Upstream=   944.5    Downstream=   940.5
Upstream     num=       2
    Width   Elev    Width   Elev
       6       0       6 1188.69
Downstream     num=       2
```

```
    Width   Elev    Width   Elev
       6       0       6 1188.69

Pier Data
Pier Station     Upstream=  1062.5    Downstream=  1058.5
Upstream     num=       2
    Width   Elev    Width   Elev
       6       0       6 1188.43
Downstream     num=       2
    Width   Elev    Width   Elev
       6       0       6 1188.43

Pier Data
Pier Station     Upstream=  1180.5    Downstream=  1176.5
Upstream     num=       2
    Width   Elev    Width   Elev
       6       0       6 1187.64
Downstream     num=       2
    Width   Elev    Width   Elev
       6       0       6 1187.64

Pier Data
Pier Station     Upstream=  1298.5    Downstream=  1294.5
Upstream     num=       2
    Width   Elev    Width   Elev
       6       0       6 1186.34
Downstream     num=       2
    Width   Elev    Width   Elev
       6       0       6 1186.34

Pier Data
Pier Station     Upstream=  1416.5    Downstream=  1412.5
Upstream     num=       2
    Width   Elev    Width   Elev
       6       0       6 1184.51
Downstream     num=       2
    Width   Elev    Width   Elev
       6       0       6 1184.51

Number of Bridge Coefficient Sets =  1

Low Flow Methods and Data
       Energy
Selected Low Flow Methods = Highest Energy Answer

High Flow Method
       Energy Only

Additional Bridge Parameters
       Add Friction component to Momentum
```

Table 6
HEC-RAS Report

```
      Do not add Weight component to Momentum
      Class B flow critical depth computations use critical depth
          inside the bridge at the upstream end
      Criteria to check for pressure flow = Upstream energy grade line

CROSS SECTION


RIVER: Salt River
REACH: SR 202              RS: 122.65

INPUT
Description:
Station Elevation Data     num=      97
     Sta    Elev     Sta    Elev     Sta    Elev     Sta    Elev     Sta    Elev
       0 1170.34    4.16 1169.84    7.36 1170.04    8.34 1169.89    8.99 1169.93
   13.62 1168.51   16.34 1168.56   16.79 1168.69    24.3 1168.83   30.69  1169.3
   32.74 1169.35   38.93  1169.2    58.2 1169.15   69.72  1169.5   75.61 1169.36
    78.4 1169.48    90.9 1169.62   93.07 1169.73   99.91 1170.48  100.74 1170.47
  102.01 1170.67  102.46 1170.65  104.13    1171   104.6 1170.92  105.43 1171.15
   108.9 1171.54  111.26 1171.35  122.66 1171.44  123.39 1171.21  126.89 1171.52
  155.06 1171.51   175.5 1171.29  177.95 1171.35  219.47 1171.29  235.03 1171.49
  261.94 1171.94  284.29 1172.29  291.55 1172.61  305.96 1173.02  310.67  1172.6
  316.04 1172.41  319.93  1172.7  324.87  1172.8  332.38 1173.18  334.44 1173.07
   337.4 1173.34  341.44 1173.51  348.48 1173.33  352.23 1172.96  353.66 1172.69
  371.93 1172.66  384.98 1172.98  399.18  1173.8  408.05 1173.88  414.34  1172.6
   427.2 1167.21  437.18 1163.63  437.26  1163.6   452.4 1158.18  458.42 1156.35
  461.02 1155.37  474.75  1154.5  478.93 1152.45  481.65 1152.69  484.52 1151.79
  673.19 1149.12   781.5 1148.42 1111.44 1147.94 1126.98 1148.48 1215.03 1148.41
 1221.68  1148.8 1249.15  1149.7 1253.63 1150.78 1385.33 1158.05 1435.75 1165.34
 1473.86 1171.33  1495.2 1172.94 1505.38 1174.48 1522.94 1177.12 1532.34 1180.85
 1533.64 1180.88 1533.74 1181.93 1534.62  1181.8 1544.06 1181.78 1544.18 1181.86
 1560.26 1181.47 1570.53 1181.37 1572.99 1181.24 1606.16  1180.5 1762.11 1176.12
 1766.71 1176.06 1772.09 1175.82 1774.97 1175.81 1782.06 1175.54  1786.6 1175.56
 1792.01 1175.31 1799.83 1175.17

Manning's n Values         num=       3
     Sta   n Val     Sta   n Val     Sta   n Val
       0     .02  484.52    .035 1215.03     .02

Bank Sta: Left   Right    Lengths: Left Channel   Right     Coeff Contr.   Expan.
        484.52 1215.03             65.93   65.42   70.33             .3       .5
Ineffective Flow      num=       1
   Sta L   Sta R    Elev  Permanent
       0  408.05    1174        F
Blocked Obstructions      num=       6
   Sta L   Sta R    Elev   Sta L   Sta R    Elev   Sta L   Sta R    Elev
    1346    1356    1180  1375.5  1385.5    1180  1423.5  1433.5    1180
  1462.5  1472.5    1180  1510.5  1520.5    1180  1537.5  1547.5    1180
```

Table 6
HEC-RAS Report

CROSS SECTION OUTPUT Profile #Pre-RDM-100yr

E.G. Elev (ft)	1171.07	Element	Left OB	Channel	Right OB
Vel Head (ft)	2.33	Wt. n-Val.	0.020	0.035	0.020
W.S. Elev (ft)	1168.75	Reach Len. (ft)	65.93	65.42	70.33
Crit W.S. (ft)	1161.93	Flow Area (sq ft)	602.77	14506.36	2752.01
E.G. Slope (ft/ft)	0.001360	Area (sq ft)	603.57	14506.36	2752.01
Q Total (cfs)	215000.00	Flow (cfs)	7367.79	166531.60	41100.63
Top Width (ft)	1010.80	Top Width (ft)	67.90	730.51	212.39
Vel Total (ft/s)	12.04	Avg. Vel. (ft/s)	12.22	11.48	14.93
Max Chl Dpth (ft)	20.81	Hydr. Depth (ft)	9.88	19.86	12.96
Conv. Total (cfs)	5830469.0	Conv. (cfs)	199803.2	4516080.0	1114586.0
Length Wtd. (ft)	66.25	Wetted Per. (ft)	63.96	730.54	269.39
Min Ch El (ft)	1147.94	Shear (lb/sq ft)	0.80	1.69	0.87
Alpha	1.03	Stream Power (lb/ft s)	9.78	19.35	12.95
Frctn Loss (ft)	0.09	Cum Volume (acre-ft)	4.01	80.44	8.86
C & E Loss (ft)	0.05	Cum SA (acres)	1.11	4.21	0.75

Warning: Divided flow computed for this cross-section.
Note: Multiple critical depths were found at this location. The critical depth with the lowest, valid, energy was used.

CROSS SECTION OUTPUT Profile #Pre-RDM-Superflo

E.G. Elev (ft)	1173.25	Element	Left OB	Channel	Right OB
Vel Head (ft)	2.54	Wt. n-Val.	0.020	0.035	0.020
W.S. Elev (ft)	1170.71	Reach Len. (ft)	65.93	65.42	70.33
Crit W.S. (ft)	1163.24	Flow Area (sq ft)	727.12	15940.72	3176.98
E.G. Slope (ft/ft)	0.001313	Area (sq ft)	861.90	15940.72	3176.98
Q Total (cfs)	250000.00	Flow (cfs)	9406.42	191518.40	49075.18
Top Width (ft)	1116.39	Top Width (ft)	168.41	730.51	217.47
Vel Total (ft/s)	12.60	Avg. Vel. (ft/s)	12.94	12.01	15.45
Max Chl Dpth (ft)	22.77	Hydr. Depth (ft)	11.07	21.82	14.61
Conv. Total (cfs)	6898269.0	Conv. (cfs)	259551.9	5284582.0	1354135.0
Length Wtd. (ft)	66.27	Wetted Per. (ft)	69.04	730.54	287.48
Min Ch El (ft)	1147.94	Shear (lb/sq ft)	0.86	1.79	0.91
Alpha	1.03	Stream Power (lb/ft s)	11.17	21.50	14.00
Frctn Loss (ft)	0.09	Cum Volume (acre-ft)	6.89	88.78	10.62
C & E Loss (ft)	0.05	Cum SA (acres)	1.64	4.21	1.23

Warning: Divided flow computed for this cross-section.
Warning: The cross-section end points had to be extended vertically for the computed water surface.
Note: Multiple critical depths were found at this location. The critical depth with the lowest, valid, energy was used.

CROSS SECTION OUTPUT Profile #Post-RDM-100yr

E.G. Elev (ft)	1167.87	Element	Left OB	Channel	Right OB

Table 6
HEC-RAS Report

Vel Head (ft)	2.05	Wt. n-Val.	0.020	0.035	0.020
W.S. Elev (ft)	1165.82	Reach Len. (ft)	65.93	65.42	70.33
Crit W.S. (ft)	1160.07	Flow Area (sq ft)	434.81	12367.18	2157.35
E.G. Slope (ft/ft)	0.001486	Area (sq ft)	434.81	12367.18	2157.35
Q Total (cfs)	169000.00	Flow (cfs)	4890.62	133436.30	30673.11
Top Width (ft)	977.70	Top Width (ft)	53.44	730.51	193.76
Vel Total (ft/s)	11.30	Avg. Vel. (ft/s)	11.25	10.79	14.22
Max Chl Dpth (ft)	17.88	Hydr. Depth (ft)	8.14	16.93	11.13
Conv. Total (cfs)	4384243.0	Conv. (cfs)	126873.7	3461639.0	795729.9
Length Wtd. (ft)	66.20	Wetted Per. (ft)	55.87	730.54	232.96
Min Ch El (ft)	1147.94	Shear (lb/sq ft)	0.72	1.57	0.86
Alpha	1.04	Stream Power (lb/ft s)	8.12	16.94	12.21
Frctn Loss (ft)	0.10	Cum Volume (acre-ft)	1.92	67.96	6.74
C & E Loss (ft)	0.04	Cum SA (acres)	0.43	4.21	0.68

Warning: Divided flow computed for this cross-section.
Note: Multiple critical depths were found at this location. The critical depth with the lowest, valid, energy was used.

CROSS SECTION

RIVER: Salt River
REACH: SR 202 RS: 122

INPUT
Description:
Station Elevation Data num= 101

Sta	Elev	Sta	Elev	Sta	Elev	Sta	Elev	Sta	Elev
0	1169.53	4.35	1169.49	8.64	1169.13	14.49	1169.14	23.31	1169.57
27.67	1169.65	31.24	1169.97	33.78	1169.62	40.26	1168.07	44.52	1166.84
65.99	1166.75	70.52	1166.87	81.2	1166.73	88.96	1167.27	91.1	1168.08
99.75	1170.33	106.2	1172.63	106.3	1172.55	110.68	1173.32	117.77	1173.75
136.89	1167.01	140.99	1166.73	160.7	1166.82	168.12	1167.07	179.06	1167.21
187.4	1168.64	194.99	1169.52	199.09	1169.86	207.18	1170.13	210.4	1169.88
217.37	1169.77	219.74	1169.57	221.34	1169.28	227.32	1168.59	228.56	1168.08
232.04	1168.41	239.08	1168.05	246.84	1167.33	253.15	1167.32	277.58	1168.11
286.93	1168.86	295.03	1169.09	307.22	1168.87	313.81	1168.89	317.65	1168.65
323.6	1169	328.89	1169.51	333.53	1170.69	338.04	1172.73	342.55	1173.04
390.72	1173.47	400.3	1173.39	420.3	1164.96	420.34	1164.94	425.81	1162.65
428.36	1162.24	434.44	1159.32	441.56	1157.38	443.83	1157.3	445.07	1156.68
460.11	1152.24	677.75	1149.08	798.7	1148.31	942.07	1148.27	1069.95	1147.95
1176.41	1148.23	1204.68	1148.5	1247.56	1149.63	1368.09	1156.28	1456.32	1169.04
1489.99	1173.67	1520.61	1176.24	1520.69	1176.25	1522.87	1176.43	1553.75	1175.48
1558.31	1175.75	1560.66	1175.74	1571.75	1176.65	1575.3	1177.24	1585.64	1179.78
1590.8	1180.78	1593.71	1180.86	1597.28	1180.66	1645.33	1179.52	1645.41	1179.21
1646.69	1179	1679.78	1177.34	1679.89	1177.74	1685.58	1177.72	1701.67	1174.7
1707.13	1173.56	1723.35	1172.31	1736.86	1171.66	1742.27	1171.68	1752.19	1171.22
1758.7	1170.56	1765.01	1169.68	1768.48	1169.74	1775.16	1169.52	1787.05	1169.56

1791.57 1169.41

Manning's n Values num= 3

Sta	n Val	Sta	n Val	Sta	n Val
0	.02	460.11	.035	1247.56	.02

Bank Sta: Left	Right	Lengths: Left	Channel	Right	Coeff Contr.	Expan.
460.11	1247.56	154.99	153.51	154.84	.1	.3

Ineffective Flow num= 2

Sta L	Sta R	Elev	Permanent
0	400.3	1175	F
1590.8	1791.57	1181	F

Blocked Obstructions num= 6

Sta L	Sta R	Elev	Sta L	Sta R	Elev	Sta L	Sta R	Elev
1340	1350	1180	1369.5	1379.5	1180	1417.5	1427.5	1180
1456.5	1466.5	1180	1504.5	1514.5	1180	1531.5	1541.5	1180

CROSS SECTION OUTPUT Profile #Pre-RDM-100yr

E.G. Elev (ft)	1170.93	Element	Left OB	Channel	Right OB
Vel Head (ft)	2.23	Wt. n-Val.	0.020	0.035	0.020
W.S. Elev (ft)	1168.70	Reach Len. (ft)	154.99	153.51	154.84
Crit W.S. (ft)	1161.69	Flow Area (sq ft)	436.06	15519.55	2134.46
E.G. Slope (ft/ft)	0.001400	Area (sq ft)	663.10	15519.55	2134.46
Q Total (cfs)	215000.00	Flow (cfs)	5024.94	179855.90	30119.16
Top Width (ft)	1184.81	Top Width (ft)	220.92	787.45	176.44
Vel Total (ft/s)	11.88	Avg. Vel. (ft/s)	11.52	11.59	14.11
Max Chl Dpth (ft)	20.75	Hydr. Depth (ft)	8.96	19.71	12.10
Conv. Total (cfs)	5746565.0	Conv. (cfs)	134307.8	4807226.0	805031.1
Length Wtd. (ft)	153.65	Wetted Per. (ft)	51.66	787.49	236.80
Min Ch El (ft)	1147.95	Shear (lb/sq ft)	0.74	1.72	0.79
Alpha	1.01	Stream Power (lb/ft s)	8.50	19.96	11.12
Frctn Loss (ft)	0.24	Cum Volume (acre-ft)	3.06	57.90	4.91
C & E Loss (ft)	0.02	Cum SA (acres)	0.89	3.07	0.44

Warning: Divided flow computed for this cross-section.
Note: Multiple critical depths were found at this location. The critical depth with the lowest, valid, water surface was used.

CROSS SECTION OUTPUT Profile #Pre-RDM-Superflo

E.G. Elev (ft)	1173.11	Element	Left OB	Channel	Right OB
Vel Head (ft)	2.43	Wt. n-Val.	0.020	0.035	0.020
W.S. Elev (ft)	1170.68	Reach Len. (ft)	154.99	153.51	154.84
Crit W.S. (ft)	1163.00	Flow Area (sq ft)	536.61	17071.09	2486.78
E.G. Slope (ft/ft)	0.001353	Area (sq ft)	1279.44	17071.09	2519.54
Q Total (cfs)	250000.00	Flow (cfs)	6559.17	207275.40	36165.40
Top Width (ft)	1363.16	Top Width (ft)	361.06	787.45	214.65
Vel Total (ft/s)	12.44	Avg. Vel. (ft/s)	12.22	12.14	14.54

Table 6
HEC-RAS Report

Max Chl Dpth (ft)	22.72	Hydr. Depth (ft)	10.05	21.68	13.77
Conv. Total (cfs)	6796058.0	Conv. (cfs)	178306.0	5634623.0	983128.6
Length Wtd. (ft)	153.66	Wetted Per. (ft)	56.73	787.49	254.71
Min Ch El (ft)	1147.95	Shear (lb/sq ft)	0.80	1.83	0.82
Alpha	1.01	Stream Power (lb/ft s)	9.77	22.24	12.00
Frctn Loss (ft)	0.23	Cum Volume (acre-ft)	5.27	63.99	6.02
C & E Loss (ft)	0.03	Cum SA (acres)	1.24	3.07	0.88

Warning: Divided flow computed for this cross-section.
Warning: The cross-section end points had to be extended vertically for the computed water surface.
Note: Multiple critical depths were found at this location. The critical depth with the lowest, valid, water surface was used.

CROSS SECTION OUTPUT Profile #Post-RDM-100yr

E.G. Elev (ft)	1167.73	Element	Left OB	Channel	Right OB
Vel Head (ft)	1.97	Wt. n-Val.	0.020	0.035	0.020
W.S. Elev (ft)	1165.76	Reach Len. (ft)	154.99	153.51	154.84
Crit W.S. (ft)	1159.84	Flow Area (sq ft)	303.01	13201.60	1645.04
E.G. Slope (ft/ft)	0.001529	Area (sq ft)	303.01	13201.60	1645.04
Q Total (cfs)	169000.00	Flow (cfs)	3181.95	143537.00	22281.00
Top Width (ft)	985.25	Top Width (ft)	41.71	787.45	156.09
Vel Total (ft/s)	11.16	Avg. Vel. (ft/s)	10.50	10.87	13.54
Max Chl Dpth (ft)	17.81	Hydr. Depth (ft)	7.26	16.77	10.54
Conv. Total (cfs)	4322451.0	Conv. (cfs)	81383.6	3671195.0	569873.0
Length Wtd. (ft)	153.63	Wetted Per. (ft)	44.08	787.49	198.57
Min Ch El (ft)	1147.95	Shear (lb/sq ft)	0.66	1.60	0.79
Alpha	1.02	Stream Power (lb/ft s)	6.89	17.39	10.71
Frctn Loss (ft)	0.26	Cum Volume (acre-ft)	1.37	48.76	3.67
C & E Loss (ft)	0.00	Cum SA (acres)	0.36	3.07	0.40

Warning: Divided flow computed for this cross-section.
Note: Multiple critical depths were found at this location. The critical depth with the lowest, valid, water surface was used.

CROSS SECTION

RIVER: Salt River
REACH: SR 202 RS: 120.5000

INPUT
Description:
Station Elevation Data num= 100

Sta	Elev	Sta	Elev	Sta	Elev	Sta	Elev	Sta	Elev
0	1163.17	6.84	1163.47	16.95	1163.45	23.27	1163.91	34.6	1166.14
43.71	1168.85	51.05	1169.93	55.05	1169.71	63.95	1168.31	69.49	1168.36
77.19	1168.14	88.52	1168.33	106.25	1167.78	119.35	1166.39	136.59	1164.01

Table 6
HEC-RAS Report

147.1	1163.74	148.82	1164.16	151.99	1164.42	154.33	1164.4	155.93	1162.36
161.06	1161.68	171.01	1162.08	172.78	1162.56	177.42	1161.95	190.58	1161.66
210.98	1162.66	219.39	1164.29	235.91	1168.72	243.38	1169.48	247.88	1169.64
254.81	1169.08	272.06	1168.11	286.13	1167.69	299.24	1174.38	304.61	1174.41
313.66	1174.89	320.68	1173.87	324.35	1171.57	340.66	1166.55	340.71	1166.53
361.21	1160.74	366.78	1157.72	367.89	1154.26	370.65	1153.08	373.92	1150.66
670.4	1150.57	701.03	1150.09	733.27	1149.27	747.16	1150.07	763.13	1150.46
862.37	1150.35	880.69	1148.98	969.15	1148.88	999.15	1149.04	1018.69	1150.08
1112.57	1149.97	1207.03	1150.27	1266.74	1151.93	1323.15	1152.51	1336.32	1151.97
1417.76	1164.42	1460.08	1173.21	1487.87	1173.72	1511.69	1173.84	1532.72	1174.44
1543.7	1177.14	1556.11	1180.66	1561	1180.94	1564.65	1180.74	1596.04	1181.9
1608.13	1182.15	1610.46	1181.87	1613.77	1181.18	1641.08	1181.21	1641.16	1174.21
1646.03	1170.88	1649.98	1170.77	1654.61	1170.37	1681.44	1169.94	1718.19	1169.83
1738.72	1169.46	1757.45	1169.78	1779.08	1170.65	1795.1	1173.38	1799.37	1173.83
1803.09	1173.42	1805.44	1172.82	1817.85	1172.25	1822.55	1172.23	1834.85	1171.25
1844.13	1170.29	1856.53	1170.05	1864.33	1170.11	1867.26	1170.36	1879.23	1170.23
1881.9	1170.47	1936.67	1170.53	1945.7	1170.75	1956.73	1170.53	1966	1170.59

Manning's n Values num= 3

Sta	n Val	Sta	n Val	Sta	n Val
0	.02	373.92	.035	1336.32	.02

Bank Sta: Left	Right	Lengths: Left	Channel	Right	Coeff Contr.	Expan.
373.92	1336.32	0	0	0	.1	.3

Ineffective Flow num= 2

Sta L	Sta R	Elev	Permanent
0	313.66	1175	F
1608.13	1966	1183	F

Blocked Obstructions num= 6

Sta L	Sta R	Elev	Sta L	Sta R	Elev	Sta L	Sta R	Elev
1309	1319	1185	1338.5	1348.5	1185	1386.5	1396.5	1185
1425.5	1435.5	1185	1473.5	1483.5	1185	1500.5	1510.5	1185

CROSS SECTION OUTPUT Profile #Pre-RDM-100yr

E.G. Elev (ft)	1170.68	Element	Left OB	Channel	Right OB
Vel Head (ft)	2.17	Wt. n-Val.	0.020	0.035	0.020
W.S. Elev (ft)	1168.51	Reach Len. (ft)			
Crit W.S. (ft)	1161.92	Flow Area (sq ft)	267.24	17337.63	630.42
E.G. Slope (ft/ft)	0.001709	Area (sq ft)	1054.23	17337.63	630.42
Q Total (cfs)	215000.00	Flow (cfs)	2689.13	205920.30	6390.60
Top Width (ft)	1300.97	Top Width (ft)	277.43	952.40	71.13
Vel Total (ft/s)	11.79	Avg. Vel. (ft/s)	10.06	11.88	10.14
Max Chl Dpth (ft)	19.63	Hydr. Depth (ft)	6.74	18.20	8.86
Conv. Total (cfs)	5201153.0	Conv. (cfs)	65053.8	4981501.0	154597.5
Length Wtd. (ft)		Wetted Per. (ft)	45.06	984.75	122.03
Min Ch El (ft)	1148.88	Shear (lb/sq ft)	0.63	1.88	0.55
Alpha	1.00	Stream Power (lb/ft s)	6.37	22.31	5.59
Frctn Loss (ft)		Cum Volume (acre-ft)			
C & E Loss (ft)		Cum SA (acres)			

Table 6
HEC-RAS Report

Warning: Divided flow computed for this cross-section.
Note: Multiple critical depths were found at this location. The critical depth with the lowest, valid, water surface was used.

CROSS SECTION OUTPUT Profile #Pre-RDM-Superflo

E.G. Elev (ft)	1172.86	Element	Left OB	Channel	Right OB
Vel Head (ft)	2.34	Wt. n-Val.	0.020	0.035	0.020
W.S. Elev (ft)	1170.51	Reach Len. (ft)			
Crit W.S. (ft)	1163.14	Flow Area (sq ft)	352.99	19242.43	782.31
E.G. Slope (ft/ft)	0.001622	Area (sq ft)	1684.91	19242.43	868.32
Q Total (cfs)	250000.00	Flow (cfs)	3793.20	238019.80	8186.97
Top Width (ft)	1569.96	Top Width (ft)	337.78	952.40	279.78
Vel Total (ft/s)	12.27	Avg. Vel. (ft/s)	10.75	12.37	10.47
Max Chl Dpth (ft)	21.63	Hydr. Depth (ft)	7.65	20.20	9.69
Conv. Total (cfs)	6208172.0	Conv. (cfs)	94195.3	5910672.0	203304.5
Length Wtd. (ft)		Wetted Per. (ft)	51.86	988.75	143.87
Min Ch El (ft)	1148.88	Shear (lb/sq ft)	0.69	1.97	0.55
Alpha	1.00	Stream Power (lb/ft s)	7.41	24.37	5.76
Frctn Loss (ft)		Cum Volume (acre-ft)			
C & E Loss (ft)		Cum SA (acres)			

Warning: Divided flow computed for this cross-section.
Note: Multiple critical depths were found at this location. The critical depth with the lowest, valid, water surface was used.

CROSS SECTION OUTPUT Profile #Post-RDM-100yr

E.G. Elev (ft)	1167.46	Element	Left OB	Channel	Right OB
Vel Head (ft)	1.96	Wt. n-Val.	0.020	0.035	0.020
W.S. Elev (ft)	1165.50	Reach Len. (ft)			
Crit W.S. (ft)	1160.20	Flow Area (sq ft)	162.81	14470.90	422.46
E.G. Slope (ft/ft)	0.001951	Area (sq ft)	464.91	14470.90	422.46
Q Total (cfs)	169000.00	Flow (cfs)	1501.59	163456.60	4041.77
Top Width (ft)	1178.06	Top Width (ft)	159.02	952.40	66.64
Vel Total (ft/s)	11.22	Avg. Vel. (ft/s)	9.22	11.30	9.57
Max Chl Dpth (ft)	16.62	Hydr. Depth (ft)	5.51	15.19	6.34
Conv. Total (cfs)	3826450.0	Conv. (cfs)	33998.6	3700939.0	91512.7
Length Wtd. (ft)		Wetted Per. (ft)	34.55	978.73	102.52
Min Ch El (ft)	1148.88	Shear (lb/sq ft)	0.57	1.80	0.50
Alpha	1.00	Stream Power (lb/ft s)	5.29	20.34	4.80
Frctn Loss (ft)		Cum Volume (acre-ft)			
C & E Loss (ft)		Cum SA (acres)			

Warning: Divided flow computed for this cross-section.
Note: Multiple critical depths were found at this location. The critical depth with the lowest, valid,

water surface was used.

SUMMARY OF MANNING'S N VALUES

River:Salt River

Reach	River Sta.	n1	n2	n3
SR 202	241.2	.02	.035	.02
SR 202	241.1	.02	.035	.02
SR 202	240.6	.02	.035	.02
SR 202	240.5	.02	.035	.02
SR 202	240.4	.02	.035	.02
SR 202	240.3	.02	.035	.02
SR 202	240.2	.02	.035	.02
SR 202	240.1	.02	.035	.02
SR 202	240	.02	.035	.02
SR 202	239	.02	.035	.02
SR 202	238	.02	.035	.02
SR 202	237	.02	.035	.02
SR 202	236	.02	.035	.02
SR 202	235	.02	.035	.02
SR 202	234	.02	.035	.02
SR 202	233	.02	.035	.02
SR 202	232	.02	.035	.02
SR 202	231	.02	.035	.02
SR 202	230	.02	.035	.02
SR 202	229	.02	.035	.02
SR 202	228	.02	.035	.02
SR 202	123.55	.02	.035	.02
SR 202	123.075	Bridge		
SR 202	122.65	.02	.035	.02
SR 202	122	.02	.035	.02
SR 202	120.5000	.02	.035	.02

SUMMARY OF REACH LENGTHS

River: Salt River

Reach	River Sta.	Left	Channel	Right
SR 202	241.2	30	29.3	29
SR 202	241.1	60	59.8	59
SR 202	240.6	59	58.66	58
SR 202	240.5	85	86.73	86

SR 202	240.4	105	106.05	106
SR 202	240.3	112	108.7	105
SR 202	240.2	35	32.49	32
SR 202	240.1	60	47.74	38
SR 202	240	516	518.02	535
SR 202	239	485	472.26	460
SR 202	238	572	501.48	433
SR 202	237	412	416.66	425
SR 202	236	425	404.51	390
SR 202	235	402	403.46	405
SR 202	234	418	399.63	382
SR 202	233	390	391.95	394
SR 202	232	400	406.03	412
SR 202	231	375	405.87	440
SR 202	230	420	385.93	365
SR 202	229	450	397.68	360
SR 202	228	422	378.69	375
SR 202	123.55	120.43	120.79	122.1
SR 202	123.075	Bridge		
SR 202	122.65	65.93	65.42	70.33
SR 202	122	154.99	153.51	154.84
SR 202	120.5000	0	0	0

SUMMARY OF CONTRACTION AND EXPANSION COEFFICIENTS
River: Salt River

Reach	River Sta.	Contr.	Expan.
SR 202	241.2	.1	.3
SR 202	241.1	.1	.3
SR 202	240.6	.1	.3
SR 202	240.5	.1	.3
SR 202	240.4	.1	.3
SR 202	240.3	.1	.3
SR 202	240.2	.1	.3
SR 202	240.1	.1	.3
SR 202	240	.1	.3
SR 202	239	.1	.3
SR 202	238	.1	.3
SR 202	237	.1	.3
SR 202	236	.1	.3
SR 202	235	.1	.3
SR 202	234	.1	.3
SR 202	233	.1	.3
SR 202	232	.1	.3
SR 202	231	.1	.3

SR 202	230		.1	.3
SR 202	229		.1	.3
SR 202	228		.1	.3
SR 202	123.55		.3	.5
SR 202	123.075	Bridge		
SR 202	122.65		.3	.5
SR 202	122		.1	.3
SR 202	120.5000		.1	.3

Profile Output Table - Standard Table 1

Reach	River Sta	Profile	Q Total	Min Ch El	W.S. Elev	Crit W.S.	E.G. Elev	E.G. Slope	Vel Chnl
Flow Area (sq ft)	Top Width (ft)	Froude # Chl	(cfs)	(ft)	(ft)	(ft)	(ft)	(ft/ft)	(ft/s)
SR 202	241.2	Pre-RDM-100yr	220000.00	1150.13	1180.22	1164.41	1181.13	0.000406	7.72
28637.69	1109.94	0.26							
SR 202	241.2	Pre-RDM-Superflo	250000.00	1150.13	1182.83	1165.43	1183.80	0.000382	7.96
31542.84	1114.78	0.26							
SR 202	241.2	Post-RDM-100yr	169000.00	1150.13	1176.34	1162.62	1177.09	0.000405	6.95
24371.97	1088.74	0.25							
SR 202	241.1	Pre-RDM-100yr	220000.00	1150.13	1180.21		1181.12	0.000399	7.66
28846.21	1116.28	0.26							
SR 202	241.1	Pre-RDM-Superflo	250000.00	1150.13	1182.83		1183.79	0.000375	7.90
31768.00	1120.61	0.25							
SR 202	241.1	Post-RDM-100yr	169000.00	1150.13	1176.34		1177.07	0.000400	6.93
24532.32	1107.67	0.25							
SR 202	240.6	Pre-RDM-100yr	220000.00	1150.13	1180.19		1181.09	0.000400	7.66
28830.54	1112.09	0.26							
SR 202	240.6	Pre-RDM-Superflo	250000.00	1150.13	1182.80		1183.77	0.000376	7.91
31747.22	1120.00	0.26							
SR 202	240.6	Post-RDM-100yr	169000.00	1150.13	1176.31		1177.05	0.000400	6.92
24542.02	1100.19	0.25							
SR 202	240.5	Pre-RDM-100yr	220000.00	1150.33	1180.16		1181.07	0.000384	7.60
28744.77	1113.97	0.25							
SR 202	240.5	Pre-RDM-Superflo	250000.00	1150.33	1182.77		1183.74	0.000361	7.82
31666.59	1122.58	0.25							
SR 202	240.5	Post-RDM-100yr	169000.00	1150.33	1176.28		1177.03	0.000386	6.88
24455.05	1101.17	0.25							
SR 202	240.4	Pre-RDM-100yr	220000.00	1149.65	1180.16		1181.02	0.000375	7.48
29518.98	1111.41	0.25							
SR 202	240.4	Pre-RDM-Superflo	250000.00	1149.65	1182.77		1183.70	0.000356	7.75
32448.91	1130.45	0.25							

Table 6
HEC-RAS Report

SR 202	240.4	Post-RDM-100yr	169000.00	1149.65	1176.28		1176.98	0.000371	6.72
25227.97	1102.40	0.24							
SR 202	240.3	Pre-RDM-100yr	220000.00	1149.91	1180.06	1164.11	1180.98	0.000403	7.70
28727.35	1133.80	0.26							
SR 202	240.3	Pre-RDM-Superflo	250000.00	1149.91	1182.68	1165.11	1183.65	0.000380	7.95
31626.18	1146.75	0.26							
SR 202	240.3	Post-RDM-100yr	169000.00	1149.91	1176.19	1162.30	1176.94	0.000400	6.93
24483.78	1099.38	0.25							
SR 202	240.2	Pre-RDM-100yr	220000.00	1150.14	1179.97		1180.93	0.000406	7.86
28083.15	1035.37	0.26							
SR 202	240.2	Pre-RDM-Superflo	250000.00	1150.14	1182.58		1183.61	0.000387	8.15
30789.97	1040.68	0.26							
SR 202	240.2	Post-RDM-100yr	169000.00	1150.14	1176.13		1176.89	0.000395	7.03
24114.82	1027.58	0.25							
SR 202	240.1	Pre-RDM-100yr	220000.00	1150.14	1179.95		1180.92	0.000403	7.85
28003.59	1026.47	0.26							
SR 202	240.1	Pre-RDM-Superflo	250000.00	1150.14	1182.56		1183.59	0.000385	8.14
30685.07	1030.91	0.26							
SR 202	240.1	Post-RDM-100yr	169000.00	1150.14	1176.11		1176.88	0.000392	7.01
24070.38	1019.89	0.25							
SR 202	240	Pre-RDM-100yr	220000.00	1150.14	1179.90	1163.63	1180.89	0.000415	8.00
27491.90	1263.21	0.27							
SR 202	240	Pre-RDM-Superflo	250000.00	1150.14	1182.50	1164.67	1183.57	0.000397	8.31
30114.48	1278.24	0.26							
SR 202	240	Post-RDM-100yr	169000.00	1150.14	1176.06	1161.67	1176.86	0.000402	7.15
23651.29	1231.70	0.26							
SR 202	239	Pre-RDM-100yr	215000.00	1150.28	1179.17	1164.74	1180.59	0.000614	9.60
22509.06	1068.88	0.32							
SR 202	239	Pre-RDM-Superflo	250000.00	1150.28	1181.66	1166.13	1183.26	0.000619	10.21
24617.50	1217.57	0.33							
SR 202	239	Post-RDM-100yr	169000.00	1150.28	1175.37	1162.78	1176.56	0.000627	8.79
19312.30	1034.27	0.32							
SR 202	238	Pre-RDM-100yr	215000.00	1147.46	1178.99	1163.77	1180.28	0.000545	9.16
23580.48	1124.89	0.30							
SR 202	238	Pre-RDM-Superflo	250000.00	1147.46	1181.48	1165.14	1182.95	0.000553	9.76
25747.25	1192.98	0.31							
SR 202	238	Post-RDM-100yr	169000.00	1147.46	1175.17	1161.87	1176.25	0.000552	8.36
20287.26	1041.99	0.30							
SR 202	237	Pre-RDM-100yr	215000.00	1144.48	1178.72	1162.00	1179.96	0.000678	8.91
24124.88	1082.58	0.29							
SR 202	237	Pre-RDM-Superflo	250000.00	1144.48	1181.20	1163.39	1182.61	0.000749	9.55
26266.84	1156.42	0.30							

Table 6
HEC-RAS Report

SR 202	237	Post-RDM-100yr	169000.00	1144.48	1174.92	1160.03	1175.93	0.000635	8.07
20971.84	1055.84	0.28							
SR 202	236	Pre-RDM-100yr	215000.00	1141.75	1177.67	1163.10	1179.54	0.001137	10.95
19638.42	909.42	0.35							
SR 202	236	Pre-RDM-Superflo	250000.00	1141.75	1179.99	1164.70	1182.14	0.001228	11.76
21239.11	920.81	0.37							
SR 202	236	Post-RDM-100yr	169000.00	1141.75	1174.04	1160.82	1175.55	0.001039	9.87
17148.22	891.53	0.34							
SR 202	235	Pre-RDM-100yr	215000.00	1140.40	1176.28	1164.03	1178.86	0.002033	12.74
16730.26	769.03	0.42							
SR 202	235	Pre-RDM-Superflo	250000.00	1140.40	1178.39	1165.83	1181.40	0.002225	13.72
18026.24	799.09	0.43							
SR 202	235	Post-RDM-100yr	169000.00	1140.40	1172.87	1161.62	1174.94	0.001833	11.46
14656.62	751.44	0.40							
SR 202	234	Pre-RDM-100yr	215000.00	1139.08	1174.81	1164.76	1177.87	0.002752	13.89
15371.51	803.03	0.47							
SR 202	234	Pre-RDM-Superflo	250000.00	1139.08	1176.73	1166.49	1180.31	0.003016	14.98
16535.83	819.02	0.49							
SR 202	234	Post-RDM-100yr	169000.00	1139.08	1171.58	1162.30	1174.04	0.002516	12.53
13428.65	761.56	0.45							
SR 202	233	Pre-RDM-100yr	215000.00	1139.58	1173.41	1164.09	1176.69	0.003008	14.46
14802.02	826.96	0.50							
SR 202	233	Pre-RDM-Superflo	250000.00	1139.58	1176.09	1165.88	1179.02	0.002509	13.77
18194.78	979.48	0.45							
SR 202	233	Post-RDM-100yr	169000.00	1139.58	1170.36	1161.61	1172.98	0.002704	12.96
13002.60	703.37	0.47							
SR 202	232	Pre-RDM-100yr	215000.00	1136.91	1172.68	1162.13	1175.49	0.002439	13.29
16024.42	886.19	0.45							
SR 202	232	Pre-RDM-Superflo	250000.00	1136.91	1174.70	1163.81	1177.97	0.002667	14.34
17299.90	906.51	0.47							
SR 202	232	Post-RDM-100yr	169000.00	1136.91	1169.70	1159.73	1171.92	0.002155	11.84
14169.31	765.38	0.43							
SR 202	231	Pre-RDM-100yr	215000.00	1138.86	1172.13	1160.87	1174.48	0.001903	12.25
17487.51	909.42	0.42							
SR 202	231	Pre-RDM-Superflo	250000.00	1138.86	1174.13	1162.46	1176.86	0.002064	13.18
18871.86	982.71	0.44							
SR 202	231	Post-RDM-100yr	169000.00	1138.86	1169.18	1158.63	1171.04	0.001683	10.90
15462.98	731.15	0.40							
SR 202	230	Pre-RDM-100yr	215000.00	1144.00	1171.17	1161.81	1173.66	0.002116	12.65
16996.08	743.89	0.46							
SR 202	230	Pre-RDM-Superflo	250000.00	1144.00	1173.13	1163.28	1175.98	0.002247	13.53
18457.40	773.63	0.47							

Table 6
HEC-RAS Report

SR 202	230	Post-RDM-100yr	169000.00	1144.00	1168.28	1159.71	1170.29	0.001946	11.38
14856.80	737.32	0.44							
SR 202	229	Pre-RDM-100yr	215000.00	1142.07	1171.17	1159.46	1172.79	0.001219	10.16
21103.16	900.00	0.36							
SR 202	229	Pre-RDM-Superflo	250000.00	1142.07	1173.18	1160.75	1175.03	0.001292	10.87
22906.89	1106.99	0.37							
SR 202	229	Post-RDM-100yr	169000.00	1142.07	1168.22	1157.59	1169.52	0.001123	9.14
18467.35	888.28	0.35							
SR 202	228	Pre-RDM-100yr	215000.00	1146.06	1170.78	1160.29	1172.30	0.001072	9.44
22235.20	1294.40	0.35							
SR 202	228	Pre-RDM-Superflo	250000.00	1146.06	1172.80	1161.52	1174.52	0.001103	10.01
24339.46	1376.63	0.36							
SR 202	228	Post-RDM-100yr	169000.00	1146.06	1167.81	1158.62	1169.07	0.001044	8.62
19155.02	1033.67	0.35							
SR 202	123.55	Pre-RDM-100yr	215000.00	1147.99	1169.64	1162.09	1171.76	0.001540	11.59
18484.59	1039.44	0.46							
SR 202	123.55	Pre-RDM-Superflo	250000.00	1147.99	1171.64	1163.36	1173.97	0.001502	12.15
20510.26	1063.61	0.46							
SR 202	123.55	Post-RDM-100yr	169000.00	1147.99	1166.68	1160.32	1168.52	0.001647	10.84
15544.08	1007.48	0.47							
SR 202	123.075		Bridge						
SR 202	122.65	Pre-RDM-100yr	215000.00	1147.94	1168.75	1161.93	1171.07	0.001360	11.48
17861.15	1010.80	0.45							
SR 202	122.65	Pre-RDM-Superflo	250000.00	1147.94	1170.71	1163.24	1173.25	0.001313	12.01
19844.82	1116.39	0.45							
SR 202	122.65	Post-RDM-100yr	169000.00	1147.94	1165.82	1160.07	1167.87	0.001486	10.79
14959.34	977.70	0.46							
SR 202	122	Pre-RDM-100yr	215000.00	1147.95	1168.70	1161.69	1170.93	0.001400	11.59
18090.06	1184.81	0.46							
SR 202	122	Pre-RDM-Superflo	250000.00	1147.95	1170.68	1163.00	1173.11	0.001353	12.14
20094.48	1363.16	0.46							
SR 202	122	Post-RDM-100yr	169000.00	1147.95	1165.76	1159.84	1167.73	0.001529	10.87
15149.66	985.25	0.47							
SR 202	120.5000	Pre-RDM-100yr	215000.00	1148.88	1168.51	1161.92	1170.68	0.001709	11.88
18235.28	1300.97	0.49							
SR 202	120.5000	Pre-RDM-Superflo	250000.00	1148.88	1170.51	1163.14	1172.86	0.001622	12.37
20377.73	1569.96	0.48							
SR 202	120.5000	Post-RDM-100yr	169000.00	1148.88	1165.50	1160.20	1167.46	0.001951	11.30
15056.17	1178.06	0.51							

Profile Output Table - Standard Table 2

Table 6
HEC-RAS Report

Reach	River Sta	Profile	E.G. Elev	W.S. Elev	Vel Head	Frctn Loss	C & E Loss	Q Left	Q Channel	Q Right	Top Width
			(ft)	(ft)	(ft)	(ft)	(ft)	(cfs)	(cfs)	(cfs)	(ft)
SR 202	241.2	Pre-RDM-100yr	1181.13	1180.22	0.92	0.01	0.00	3642.58	213178.10	3179.26	1109.94
SR 202	241.2	Pre-RDM-Superflo	1183.80	1182.83	0.98	0.01	0.00	4909.03	240910.70	4180.30	1114.78
SR 202	241.2	Post-RDM-100yr	1177.09	1176.34	0.75	0.01	0.00	2611.46	164628.40	1760.15	1088.74
SR 202	241.1	Pre-RDM-100yr	1181.12	1180.21	0.90	0.02	0.00	3887.11	212854.30	3258.54	1116.28
SR 202	241.1	Pre-RDM-Superflo	1183.79	1182.83	0.96	0.02	0.00	5212.78	240490.00	4297.24	1120.61
SR 202	241.1	Post-RDM-100yr	1177.07	1176.34	0.74	0.02	0.00	2149.42	165042.60	1807.99	1107.67
SR 202	240.6	Pre-RDM-100yr	1181.09	1180.19	0.91	0.02	0.00	3652.18	213718.80	2629.06	1112.09
SR 202	240.6	Pre-RDM-Superflo	1183.77	1182.80	0.96	0.02	0.00	4869.44	241719.40	3411.20	1120.00
SR 202	240.6	Post-RDM-100yr	1177.05	1176.31	0.74	0.02	0.00	2001.54	165373.30	1625.14	1100.19
SR 202	240.5	Pre-RDM-100yr	1181.07	1180.16	0.91	0.03	0.02	16305.48	201345.00	2349.46	1113.97
SR 202	240.5	Pre-RDM-Superflo	1183.74	1182.77	0.98	0.03	0.02	20029.54	226904.50	3065.93	1122.58
SR 202	240.5	Post-RDM-100yr	1177.03	1176.28	0.74	0.03	0.01	10702.71	156854.70	1442.61	1101.17
SR 202	240.4	Pre-RDM-100yr	1181.02	1180.16	0.86	0.04	0.01	1777.22	215574.80	2647.96	1111.41
SR 202	240.4	Pre-RDM-Superflo	1183.70	1182.77	0.93	0.04	0.00	2043.22	244463.10	3493.65	1130.45
SR 202	240.4	Post-RDM-100yr	1176.98	1176.28	0.70	0.04	0.00	1073.09	166407.20	1519.75	1102.40
SR 202	240.3	Pre-RDM-100yr	1180.98	1180.06	0.91	0.04	0.00	1192.88	216171.40	2635.71	1133.80
SR 202	240.3	Pre-RDM-Superflo	1183.65	1182.68	0.97	0.04	0.01	1733.20	244591.00	3675.76	1146.75
SR 202	240.3	Post-RDM-100yr	1176.94	1176.19	0.74	0.04	0.00	569.05	166745.00	1685.95	1099.38
SR 202	240.2	Pre-RDM-100yr	1180.93	1179.97	0.95	0.01	0.00	1008.99	215555.00	3435.98	1035.37

Table 6
HEC-RAS Report

SR 202	240.2	Pre-RDM-Superflo	1183.61	1182.58	1.03	0.01	0.00	1341.35	244401.70
4256.96	1040.68								
SR 202	240.2	Post-RDM-100yr	1176.89	1176.13	0.76	0.01	0.00	585.24	166131.30
2283.49	1027.58								
SR 202	240.1	Pre-RDM-100yr	1180.92	1179.95	0.96	0.02	0.00	750.90	212836.90
6412.19	1026.47								
SR 202	240.1	Pre-RDM-Superflo	1183.59	1182.56	1.03	0.02	0.00	997.85	241384.30
7617.90	1030.91								
SR 202	240.1	Post-RDM-100yr	1176.88	1176.11	0.77	0.02	0.00	436.42	163985.30
4578.24	1019.89								
SR 202	240	Pre-RDM-100yr	1180.89	1179.90	0.99	0.26	0.04	4603.42	211848.50
3548.05	1263.21								
SR 202	240	Pre-RDM-Superflo	1183.57	1182.50	1.07	0.25	0.05	5529.96	240129.40
4340.65	1278.24								
SR 202	240	Post-RDM-100yr	1176.86	1176.06	0.79	0.26	0.04	3190.78	163396.60
2412.64	1231.70								
SR 202	239	Pre-RDM-100yr	1180.59	1179.17	1.42	0.27	0.04	2715.17	209875.20
2409.64	1068.88								
SR 202	239	Pre-RDM-Superflo	1183.26	1181.66	1.61	0.28	0.04	3527.64	243335.30
3137.02	1217.57								
SR 202	239	Post-RDM-100yr	1176.56	1175.37	1.19	0.28	0.03	1752.36	165699.90
1547.70	1034.27								
SR 202	238	Pre-RDM-100yr	1180.28	1178.99	1.29	0.30	0.02	2657.51	209279.30
3063.16	1124.89								
SR 202	238	Pre-RDM-Superflo	1182.95	1181.48	1.47	0.32	0.02	3395.32	242705.70
3899.02	1192.98								
SR 202	238	Post-RDM-100yr	1176.25	1175.17	1.08	0.30	0.02	1768.57	165174.80
2056.67	1041.99								
SR 202	237	Pre-RDM-100yr	1179.96	1178.72	1.23	0.36	0.06	6699.64	204545.80
3754.53	1082.58								
SR 202	237	Pre-RDM-Superflo	1182.61	1181.20	1.41	0.39	0.07	7473.54	237605.90
4920.59	1156.42								
SR 202	237	Post-RDM-100yr	1175.93	1174.92	1.01	0.33	0.05	4671.44	161845.50
2483.05	1055.84								
SR 202	236	Pre-RDM-100yr	1179.54	1177.67	1.86	0.60	0.07	3230.16	207704.30
4065.59	909.42								
SR 202	236	Pre-RDM-Superflo	1182.14	1179.99	2.15	0.65	0.09	4296.16	240364.30
5339.57	920.81								
SR 202	236	Post-RDM-100yr	1175.55	1174.04	1.51	0.55	0.06	1988.72	164443.50
2567.76	891.53								
SR 202	235	Pre-RDM-100yr	1178.86	1176.28	2.58	0.95	0.05	4381.74	203736.50
6881.76	769.03								

Table 6
HEC-RAS Report

SR 202	235	Pre-RDM-Superflo	1181.40	1178.39	3.01	1.04	0.06	5816.09	235415.10
8768.78	799.09								
SR 202	235	Post-RDM-100yr	1174.94	1172.87	2.07	0.86	0.04	2700.54	161716.90
4582.59	751.44								
SR 202	234	Pre-RDM-100yr	1177.87	1174.81	3.05	1.15	0.02	6054.04	205063.00
3882.92	803.03								
SR 202	234	Pre-RDM-Superflo	1180.31	1176.73	3.57	1.10	0.19	7901.26	237006.10
5092.66	819.02								
SR 202	234	Post-RDM-100yr	1174.04	1171.58	2.46	1.04	0.02	3792.86	162788.30
2418.82	761.56								
SR 202	233	Pre-RDM-100yr	1176.69	1173.41	3.28	1.06	0.14	4597.90	206298.70
4103.36	826.96								
SR 202	233	Pre-RDM-Superflo	1179.02	1176.09	2.93	1.01	0.03	6030.05	216525.60
27444.35	979.48								
SR 202	233	Post-RDM-100yr	1172.98	1170.36	2.62	0.94	0.12	2853.72	163503.50
2642.80	703.37								
SR 202	232	Pre-RDM-100yr	1175.49	1172.68	2.82	0.87	0.14	4659.43	203937.40
6403.16	886.19								
SR 202	232	Pre-RDM-Superflo	1177.97	1174.70	3.27	0.95	0.16	5141.88	236719.00
8139.09	906.51								
SR 202	232	Post-RDM-100yr	1171.92	1169.70	2.22	0.77	0.11	2954.23	161669.30
4376.46	765.38								
SR 202	231	Pre-RDM-100yr	1174.48	1172.13	2.35	0.81	0.01	3493.19	207015.00
4491.82	909.42								
SR 202	231	Pre-RDM-Superflo	1176.86	1174.13	2.73	0.87	0.01	4653.43	239617.00
5729.59	982.71								
SR 202	231	Post-RDM-100yr	1171.04	1169.18	1.86	0.73	0.02	2180.02	163800.70
3019.33	731.15								
SR 202	230	Pre-RDM-100yr	1173.66	1171.17	2.48	0.61	0.26	2968.05	209633.90
2398.03	743.89								
SR 202	230	Pre-RDM-Superflo	1175.98	1173.13	2.85	0.65	0.30	3944.83	242862.20
3193.00	773.63								
SR 202	230	Post-RDM-100yr	1170.29	1168.28	2.01	0.56	0.21	1864.71	165638.70
1496.60	737.32								
SR 202	229	Pre-RDM-100yr	1172.79	1171.17	1.61	0.46	0.03	2537.27	208234.30
4228.47	900.00								
SR 202	229	Pre-RDM-Superflo	1175.03	1173.18	1.85	0.48	0.04	3411.26	241188.00
5400.76	1106.99								
SR 202	229	Post-RDM-100yr	1169.52	1168.22	1.30	0.43	0.01	1556.44	164610.40
2833.18	888.28								
SR 202	228	Pre-RDM-100yr	1172.30	1170.78	1.52	0.49	0.06	15097.63	198675.00
1227.33	1294.40								

Table 6
HEC-RAS Report

SR 202	228	Pre-RDM-Superflo	1174.52	1172.80	1.72	0.49	0.06	18108.37	230193.60
1698.01	1376.63								
SR 202	228	Post-RDM-100yr	1169.07	1167.81	1.26	0.49	0.06	11299.07	156993.20
707.77	1033.67								
SR 202	123.55	Pre-RDM-100yr	1171.76	1169.64	2.11	0.04	0.11	8929.27	203950.70
2120.01	1039.44								
SR 202	123.55	Pre-RDM-Superflo	1173.97	1171.64	2.32	0.04	0.12	11253.65	235575.40
3170.95	1063.61								
SR 202	123.55	Post-RDM-100yr	1168.52	1166.68	1.84	0.05	0.10	6094.39	161847.80
1057.83	1007.48								
SR 202	123.075		Bridge						
SR 202	122.65	Pre-RDM-100yr	1171.07	1168.75	2.33	0.09	0.05	7367.79	166531.60
41100.63	1010.80								
SR 202	122.65	Pre-RDM-Superflo	1173.25	1170.71	2.54	0.09	0.05	9406.42	191518.40
49075.18	1116.39								
SR 202	122.65	Post-RDM-100yr	1167.87	1165.82	2.05	0.10	0.04	4890.62	133436.30
30673.11	977.70								
SR 202	122	Pre-RDM-100yr	1170.93	1168.70	2.23	0.24	0.02	5024.94	179855.90
30119.16	1184.81								
SR 202	122	Pre-RDM-Superflo	1173.11	1170.68	2.43	0.23	0.03	6559.17	207275.40
36165.40	1363.16								
SR 202	122	Post-RDM-100yr	1167.73	1165.76	1.97	0.26	0.00	3181.95	143537.00
22281.00	985.25								
SR 202	120.5000	Pre-RDM-100yr	1170.68	1168.51	2.17			2689.13	205920.30
6390.60	1300.97								
SR 202	120.5000	Pre-RDM-Superflo	1172.86	1170.51	2.34			3793.20	238019.80
8186.97	1569.96								
SR 202	120.5000	Post-RDM-100yr	1167.46	1165.50	1.96			1501.59	163456.60
4041.77	1178.06								

TRM
MANUFACTURING

'WEATHER-ALL' brand

POLYETHYLENE FILM PRODUCTS

MULTI-PURPOSE ECONOMY ROLLS				
STK #	ROLL SIZE	LBS. / ROLL	COLOR BLK / CLR	CTNS PLT
.001 ONE MIL ROLLS				
109	9' X 400'	17.2	CLR	56
112	12' X 400'	22.9	CLR	49
.002 TWO MIL ROLLS				
2050	4'2" X 200'	8.00	CLR	24/6
20504	4'2" X 200'	8.00	CLR	30/4
2100	8'4" X 200'	15.9	CLR	56
212	12' X 200'	22.9	CLR	49
220	20' X 200'	38.2	CLR	25
.004 FOUR MIL ROLLS				
403	3' X 100'	5.7	BLK / CLR	24/6
404	4' X 100'	7.6	BLK / CLR	24/6
406	6' X 100'	11.5	BLK / CLR	72
408	8' X 100'	15.3	BLK / CLR	56
410	10' X 100'	19.1	BLK / CLR	56
412	12' X 100'	22.9	BLK / CLR	49
414	14' X 100'	26.7	BLK / CLR	25
416	16' X 100'	30.6	BLK / CLR	25
420	20' X 100'	38.2	BLK / CLR	25
424	24' X 100'	45.8	BLK / CLR	25
428	28' X 100'	53.5	BLK / CLR	25
432	32' X 100'	61.1	BLK / CLR	20
440	40' X 100'	76.4	BLK / CLR	20
.006 SIX MIL ROLLS				
606	6' X 100'	17.2	BLK / CLR	72
608	8' X 100'	23	BLK / CLR	56
610	10' X 100'	28.7	BLK / CLR	48
612	12' X 100'	34.4	BLK / CLR	36
614	14' X 100'	41.2	BLK / CLR	16
616	16' X 100'	45.9	BLK / CLR	16
620	20' X 100'	57.4	BLK / CLR	16
624	24' X 100'	68.9	BLK / CLR	16
628	28' X 100'	80.4	BLK / CLR	16
632	32' X 100'	91.8	BLK / CLR	8
640	40' X 100'	114.6	BLK / CLR	8

MULTI-PURPOSE ECONOMY ROLLS				
STK #	ROLL SIZE	LBS. / ROLL	COLOR BLK / CLR	CTNS PLT
.008 EIGHT MIL ROLLS				
820	20' X 100'	76.4	BLK / CLR	9
.010 TEN MIL ROLLS				
1020	20' X 100'	95.5	BLK / CLR	9
.015 FIFTEEN MIL ROLLS				
1520	20' X 100'	143	BLK / CLR	8
.020 TWENTY MIL ROLLS				
2020	20' X 100'	191	BLK / CLR	6

.004 WHITE OPAQUE				
WO420	20' X 100'	38.2	OPAQUE	25
.006 WHITE OPAQUE				
WO620	20' X 100'	57.4	OPAQUE	16

TRM 'Weather-All' multi-purpose polyethylene film is folded, wound on laminated cores, and packaged neatly in labeled cartons that are convenient for storage or handling. It is shipped in unitized loads, stacked on wood pallets, with an overlay of stretch wrap for maximum protection.

Items shown can be ordered by themselves, or in combination with other TRM products for prepaid freight and quantity discounts. Custom items are also available, subject to special quotation.

Conforms to product standard PS 17-69

TERMS OF PAYMENT : NET 30 DAYS

MEETING THE HIGHEST INDUSTRY, STATE AND FEDERAL QUALITY STANDARDS

TRM MANUFACTURING

375 TRM CIRCLE • CORONA, CA 92879 • (951) 256-8555

January 9, 2006

MATERIAL SAFETY DATA SHEET

SECTION I

PRODUCT NAME : **'WEATHER-ALL' BRAND POLYETHYELENE FILM**
SIZES: VARIOUS, RANGING IN THICKNESS BETWEEN .0004" & .020"
CHEMICAL NAME: POLYETHYLENE FORMULA: (C2H4) N
MANUFACTURER: **T R M MANUFACTURING, INC.**
PO BOX 486, 14385 INDUSTRY CIRCLE
LA MIRADA, CALIFORNIA 90637

FOR INFORMATION ON HEALTH HAZARDS CALL: (562) 921-3458
FOR OTHER INFORMATION CALL: SAME AS ABOVE
INFORMATION EFFECTIVE AS OF: JUNE, 1986

SECTION II HAZARDOUS INGREDIENTS OF MIXTURES

PRINCIPAL HAZARDOUS COMPONENT (S) **%** **TLV (UNITS)**
NOT APPLICABLE

SECTION III PHYSICAL DATA

BOILING POINT (DEGREES F): NOT APPLICABLE
SPECIFIC GRAVITY (H20=1): .910 - .965
VAPOR PRESSURE (mm HG.): NOT APPLICABLE
PERCENT VOLATILE BY VOLUME (%): NOT APPLICABLE
EVAPORATION RATE: NOT APPLICABLE
APPEARANCE AND ODOR: PLASTIC FILM, CLEAR OR COLORED , OF VARIOUS SIZES, WITH LITTLE OR NO ODOR.

SECTION IV FIRE AND EXPLOSION HAZARD DATA

FLASH PIONT (METHOD USED): NOT APPLICABLE
FLAMMABLE LIMITS: NOT APPLICABLE
EXTINGUISHING MEDIA: WATER SPRAY, DRY CHEMICAL, CO2
SPECIAL FIRE-FIGHTING PROCEDURES: SELF-CONTAINED BREATHING APPARATUS AND PROTECTIVE CLOTHING SHOULD BE WORN IN FIGHTING FIRES INVOLVING CHEMICALS.
UNUSUAL FIRE AND EXPLOSION HAZARD: NONE

SECTION V HEALTH HAZARD DATA

THRESHOLD LIMIT VALUE: NOT ESTABLISHED.
EFFECTS OF OVEREXPOSURE: NOT ESTABLISHED.
EMERGENCY AND FIRST AID PROCEDURES: IF BURNED BY CONTACT WITH HOT PLASTIC, COOL MOLTEN MATERIAL ADHERING TO THE SKIN AS QUICKLY AS POSSIBLE WITH COLD WATER, AND SEE A PHYSICIAN FOR REMOVAL OF ANY ADHERING MATERIAL, AND TREATMENT OF THE BURN.

SECTION VI REACTIVITY REPORT

STABILITY: UNSTABLE___ STABLE X
CONDITIONS TO AVOID: NOT APPLICABLE
INCOMPATIBILITY (MATERIALS TO AVOID): OXIDIZING MATERIALS CAN CAUSE A REACTION.
HAZARDOUS DECOMPOSITION PRODUCTS: AS WITH ANY OTHER ORGANIC MATERIAL, COMBUSTION WILL PRODUCE CARBON DIOXIDE AND PROBABLY CARBON MONOXIDE.
HAZARDOUS POLYMERIZATION: WILL NOT OCCUR.
CONDITIONS TO AVOID: NOT APPLICABLE

SECTION VII SPILL OR LEAK PROCEDURES

STEPS TO BE TAKEN IF MATERIAL IS RELEASED OR SPILLED: COLLECT AND OBTAIN FOR SALVAGE / DISPOSAL.
WASTE DISPOSAL METHOD: INCINERATION OR LANDFILL. OBSERVE ALL FEDERAL, STATE AND LOCAL LAWS CONCERNING HEALTH AND POLLUTION.

SECTION VIII SPECIAL PROTECTION EQUIPMENT

RESPIRATORY PROTECTION: NONE SHOULD BE REQUIRED.
VENTILATION - LOCAL EXHAUST: IF NEEDED TO CONTROL DUST OR FUMES.
- MECHANICAL (GENERAL): RECOMMENDED.
- SPECIAL: NONE KNOWN TO TRM.
- OTHER: NONE KNOWN TO TRM

PROTECTIVE GLOVES: SHOULD BE WORN TO PROTECT AGAINST THERMAL BURNS.
EYE PROTECTION: SAFETY GLASSES SHOULD BE WORN IN ANY TYPE OF INDUSTRIAL OPERATION.
OTHER PROTECTIVE EQUIPMENT: SAFETY SHOWER.

SECTION IX SPECIAL PRECAUTIONS

PRECAUTIONS TO BE TAKEN IN HANDLING AND STORING: DO NOT STORE NEAR HEAT, FLAME, OR STRONG OXIDANTS.
OTHER PRECAUTIONS: NONE KNOWN TO TRM

HEALTH HAZARD DATA CONTAINED HEREIN WAS OBTAINED FROM SUPPLIERS OF RAW MATERIALS. INFORMATION CONTAINED HEREIN IS FURNISHED WITHOUT WARRANTY OF ANY KIND. EMPLOYERS SHOULD USE THIS INFORMATION ONLY AS A SUPPLEMENT TO OTHER INFORMATION GATHERED BY THEM, AND MUST MAKE INDEPENDENT DETERMINATIONS OF SUITABILITY AND COMPLETENESS OF INFORMATION FROM ALL SOURCES TO ASSURE PROPER USE OF THESE MATERIALS AND THE SAFETY AND HEALTH OF EMPLOYEES.

T R M MANUFACTURING, INC.

THOMAS J. NEALE
QUALITY CONTROL MGR.

TRM

MANUFACTURING

TECHNICAL BULLETIN # 3

This is to certify that 'Weather-All' Brand Polyethylene Films are manufactured by T.R.M, and that they will meet or exceed the minimum physical property requirements set forth in the following specifications and standards:

1. National Bureau of Standards Voluntary Product Standard **PS 17-69**: **COMPLIES**

2. Federal Specification **LP 378D**, Type 1, Class 1, Grade A, Finish 1: **COMPLIES**

3. American Society for Testing and Materials **ASTM D 4397** Standard Specification for Polyethylene Sheeting for Construction, Industrial, and Agricultural Applications: **COMPLIES**

4. **ASTM E-96**, Average water vapor transmission shall not be greater that 1.40 grams per 100 square inches per 24 hours for film 1 mil thick, inversely proportional for other thickness. Not to exceed:

WVTR Grams /24 hr/ Sq meter max	MILS	PERMS	METRIC PERMS	WVTR Grams /24 hr/ Sq meter max	
22.0	1	0.76	0.50	1.40	
11.0	2	0.38	0.25	0.70	
5.5	4	0.19	0.12	0.35	
3.7	6	0.13	0.084	0.23	
2.8	8	0.096	0.063	0.18	
2.2	10	0.076	0.05	0.14	
1.15	15	0.057	0.033	0.10	
1.1	20	0.038	0.025	0.07	**COMPLIES**

5. **ASTM D 1709,** Average impact resistance by the free-falling dart method shall not be less than:

Gauge (mils)	Grams	Gauge (mils)	Grams	
1	40	8	370	
1.5	65	10	475	
2	85	15	640	
4	165	20	1010	
6	260			**COMPLIES**

SPECIALIZING IN CONSTRUCTION AND INDUSTRIAL SHEETING

6. **ASTM D-882** Method A, Average Tensile Properties not less than:

	Lengthwise	Crosswise
Tensile Strength, psi	1700	1200
Elongation, %	350	225

COMPLIES

7. Federal Specification **LS-137**, requiring no evidence of fungus growth: **COMPLIES**

8. Minimum requirements set forth in Federal Specification **UUP-147B** and **F. H. A. Bulletin UM20A**: **COMPLIES**

9. American Society for Testing and Materials, **ASTM D2103** **COMPLIES**

10. **ASTM E154**, Methods of Testing Materials for use as vapor barriers under concrete slabs and as ground cover in crawl spaces: **COMPLIES**

11. **ASTM C-156**, Moisture Retention, requiring that loss of water will not exceed 0.055 G/CM2: **COMPLIES**

WHITE AND CLEAR 4 MIL (.004") FILM ONLY:

12. **ASTM C171**, Standard specification for sheet materials for curing concrete: **COMPLIES**

T R M MANUFACTURING, INC.

Thomas J. Neale

The information above is, to the best of our knowledge, accurate; but is furnished without warranty of any kind. Because the conditions of use are beyond the control of TRM, we can make no statement as to the fitness or suitability of our products for any particular end use. To assure proper use of material, test before using!

WRT117 – ARCGIS – 11/13/13 class notes

1. Google and GIS

2. Spatial data formats
   a. Shapefile (SHP, SHX, DBF, PRJ) – Shapefile to KML and vice versa
   b. GPX (Garmin)
   c. KMZ zipped KML – read/write KMLs in ARCMAP 10
   d. Google Earth
   e. KMZ – special symbols like logos
   f. KML – simple
   g. Google "my places" linked with Google account
   h. ARCMAP/GOOGLE EARTH
   i. Relate/join, buffer, union, clip, merge