US Army Corps of Engineers

Los Angeles District
Geotechnical Branch
Dam and Levee Safety Section

Appendix D3
Avondale Bridge
As-Built Drawings

NATIONAL FLOOD INSURANCE PROGRAM, LEVEE SYSTEM EVALUATION REPORT (NLSER) FOR TRES RIOS NORTH LEVEE, MARICOPA COUNTY, ARIZONA

Center: Tres Rios North Levee looking downstream.
Lower Left: Downstream end of interior drainage outlet flap gates.
Upper Right: Near upstream end on levee crest looking upstream.

by
US Army Corps of Engineers
Los Angeles District, Geotechnical Branch
915 Wilshire Boulevard, Los Angeles CA 90017
November 2012

Appendix D3

Avondale Bridge As-Built Drawings

MARICOPA COUNTY
DEPARTMENT OF TRANSPORTATION

PLANS FOR THE CONSTRUCTION OF:
116th AVENUE BRIDGE AT GILA RIVER

PROJECT NO. 68832

FEDERAL PROJECT NO. STP-MMA-0(18)P

STATE TRACS NO. SS34501C

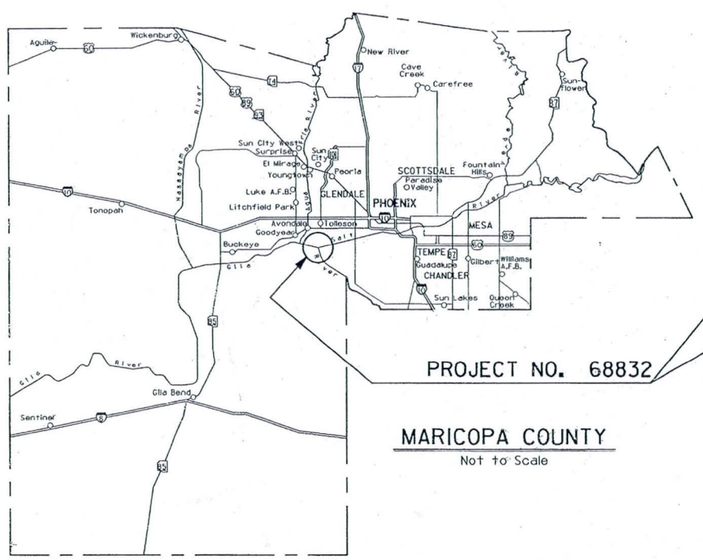

MARICOPA COUNTY
Not to Scale

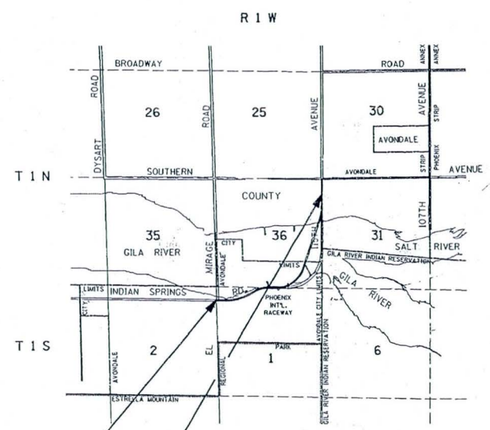

VICINITY MAP
N.T.S.

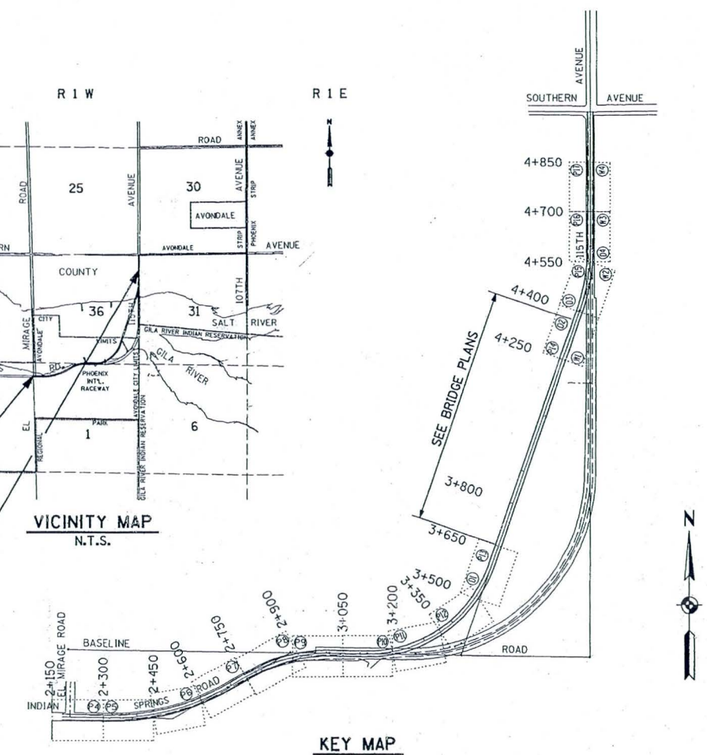

KEY MAP
N.T.S.

RECORD DRAWING

RECORD DRAWING NOTATIONS

These record drawings reflect certain dimensions, details, specifications, and plan revisions prepared by others or obtained from other record drawings which have not been independently verified by Entranco. As a result, Entranco is not responsible for the accuracy, appropriateness or completeness of such information depicted in these record drawing notations.

ENTRANCO ENGINEERS, INC.
DATE: 8-16-99

REGISTERED PROFESSIONAL ENGINEER (CIVIL)
CERTIFICATE NO. 8984
J. E. MILNE
DATE SIGNED 8-16-99
ARIZONA U.S.A.

MARICOPA COUNTY DEPARTMENT OF TRANSPORTATION

ISSUED FOR PUBLIC BIDDING BY:

Philip Epstein 8-12-97
PROJECT MANAGER DATE

REGISTERED PROFESSIONAL ENGINEER (CIVIL)
CERTIFICATE NO. 18423
DONALD R. DAVIS
DATE SIGNED 8/6/97
ARIZONA U.S.A.

COUNTY BOARD OF SUPERVISORS

DON STAPLEY - CHAIRMAN

DISTRICT 1	FULTON BROCK
DISTRICT 2	DON STAPLEY
DISTRICT 3	BETSEY BAYLESS
DISTRICT 4	JANICE K. BREWER
DISTRICT 5	MARY ROSE WILCOX

NOTE:
VALUE ENGINEERING REVISION SHEETS

116TH AVE. BRIDGE @ THE GILA RIVER - AS BUILTS (STRUCT. # 10163)

F.H.W.A. REGION	STATE	PROJECT NO.	SHEET NO.	TOTAL SHEETS	RECORD DRAWING
9	AZ	STP. MMA(018)P	3	68	

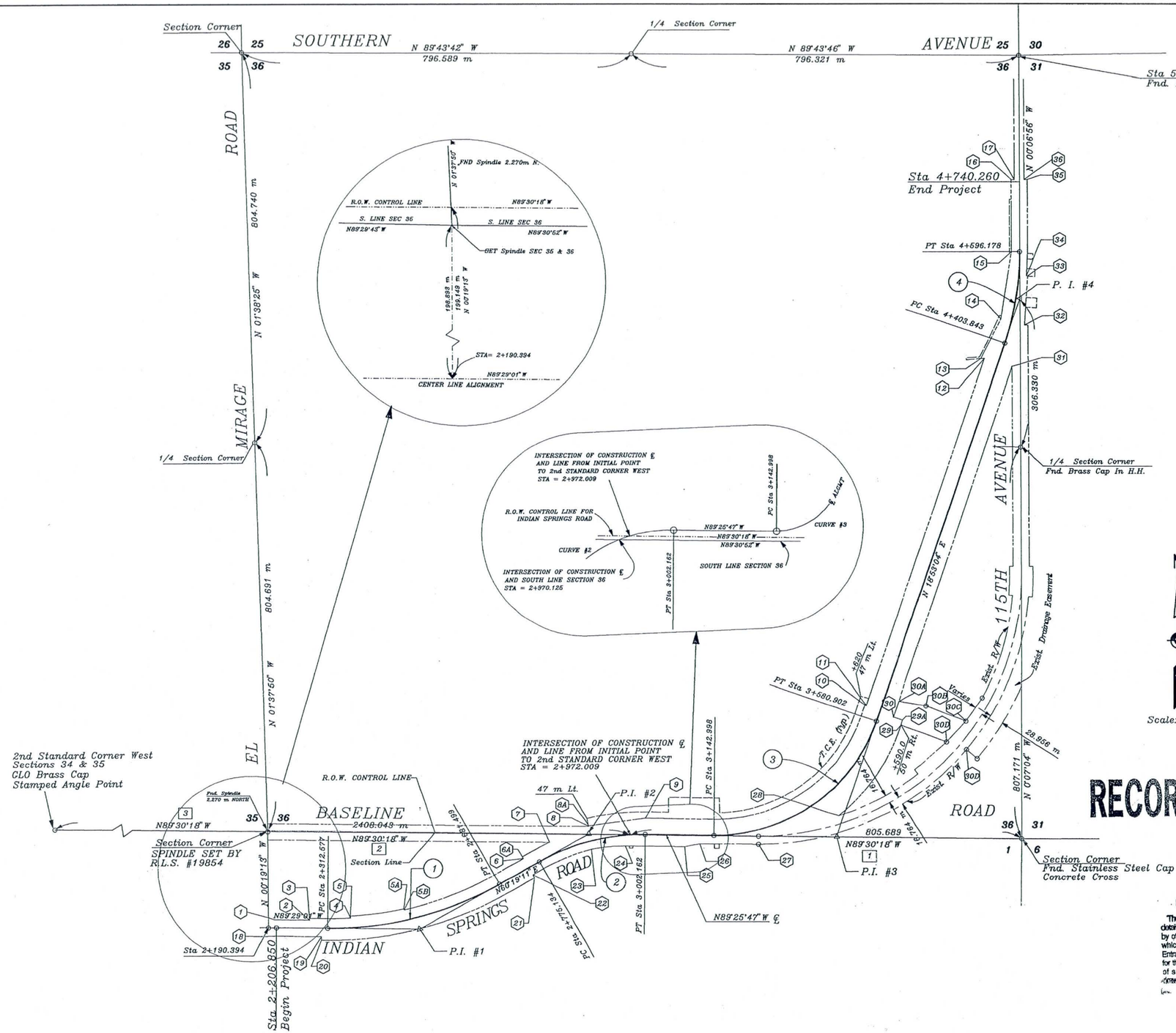

RIGHT OF WAY DATA TABLES

LEFT RIGHT OF WAY		
POINT NO.	STATION	OFFSET
* 1	2+202.342	16.764
2	2+275	16.764
3	2+275	20
4	2+360	20
5	2+360	24
5A	2+475	24
5B	2+475	22
6	2+750	22
6A	2+750	26
7	2+811.275	26
8	2+892.394	30.365
8A	2+892.394	31.499
9	3+002.162	33
10	3+605	33
11	3+605	30
12	4+360	30
13	4+357	37
14	4+450	22
15	4+596.178	16.764
16	4+745.086	16.764
17	4+745.086	10.058

RIGHT RIGHT OF WAY		
POINT NO.	STATION	OFFSET
18	2+206.850	16.764
19	2+300	16.764
20	2+300	24
21	2+750	24
22	2+750	16.764
23	2+886.593	16.764
24	2+959.384	22.292
25	3+083.589	24.128
26	3+114.062	17.746
* 27	3+228.579	28.703
28	3+386.509	50
29	3+590	50
29A	3+600	50
30	3+600	30
30A	3+635	30
30B	3+644.22	86.292
30C	3+640.862	174.273
30D	3+587.357	150.375
30E	3+585.944	194.190
31	4+362.284	30
32	4+450.670	29.127
33	4+547.576	19
34	4+547.576	16.764
35	4+745.086	16.764
36	4+745.086	10.058

* R.O.W. LOCATIONS AS PROVIDED BY ENGINEERING ALLIANCE, INC.

NOTE: Bearing Shown on the South Lines is on the R.O.W. CONTROL LINE R.O.W. CONTROL LINE is Discribed as the line from the Initial Point To the 2nd Standard Corner WEST.

ACTUAL BEARING AND DISTANCES ON SOUTH LINES ARE:

1 N89°30'52" W 775.154m S.E. QUARTER SEC 36

2 N89°30'52" W 775.154m S.W. QUARTER SEC 36

3 N89°29'43" W 1606.866m SOUTH LINE SEC 35

℄ CURVE DATA TABLE

CURVE NO.	1	2	3	4
P. I. STATION	2+501.430	2+891.360	3+395.825	4+500.902
Δ	30°11'48.0"	30°15'02.0"	71°41'09.0"	19°00'00"
R	700.000	430.000	350.000	580.000
L	368.922	227.028	437.904	192.335
T	188.853	116.226	252.827	97.059

RECORD DRAWING

RECORD DRAWING NOTATIONS

These record drawings reflect certain dimensions, details, specifications, and plan revisions prepared by others or obtained from other record drawings which have not been independently verified by Entranco. As a result, Entranco is not responsible for the accuracy, appropriateness or completeness of such information depicted in these record drawing notations.

ENTRANCO ENGINEERS, INC.

DATE: 8-10-99

NO.	REVISION	BY	DATE
3			
2			
1			

MARICOPA COUNTY
DEPARTMENT OF TRANSPORTATION
ENGINEERING DIVISION

116th AVENUE BRIDGE
AT GILA RIVER
PROJECT NO 68832

REGISTERED LAND SURVEYOR CERTIFICATE NO. 19854 PAUL M. SOWERS ARIZONA U.S.A.

Urban Engineering
Planning Engineering Surveying
Aviation Environmental Transportation
2633 E. Indian School Suite, 110 Phoenix, Az. 85016 Phone 602-381-0004

JOB NO. 94015 DRAWN BDB CHECK PMS
FIELD DATE SHEET 1 OF 1

GEOMETRIC AND RIGHT OF WAY PLAN

SHEET OF P3 24

TRACS NO. SS345OIC

F.W.H.A. REGION	STATE	PROJECT NO.	SHEET NO.	TOTAL SHEETS	RECORD DRAWING
9	AZ.	STP-MMA-0(181)P	12	68	

☐ REMOVAL/RELOCATE ☐

RECORD DRAWING

RECORD DRAWING NOTATIONS

These record drawings reflect certain dimensions, details, specifications, and plan revisions prepared by others or obtained from other record drawings which have not been independently verified by Entranco. As a result, Entranco is not responsible for the accuracy, appropriatenesa or completenass of such information depicted in these record drawing notations.

ENTRANCO ENGINEERS, INC.
DATE: 8-10-99

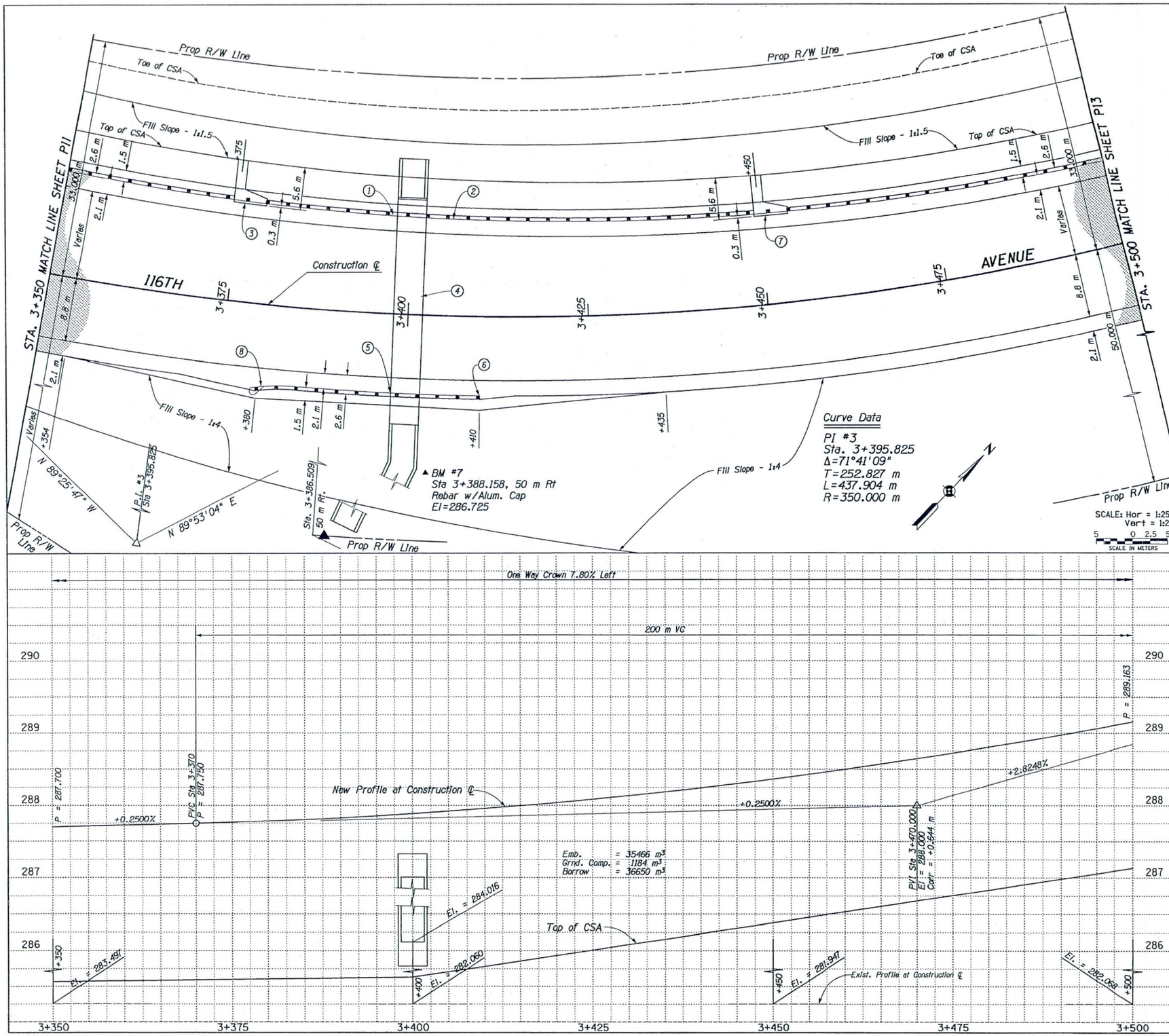

CONSTRUCTION

1. Sta. 3+350 14.445 m to Sta. 3+500, 11.718 m Lt. Install 144 m Guardrail per MCDOT Dets. 2036, Type "A" & 2039
2. Sta. 3+350 14.445 m to Sta. 3+500, 11.718 m Lt. Install 137 m Embankment Curb, See Detail C, Sheet P23
3. Sta. 3+375, 13.7 m to 19.3 m Lt. Construct Embankment Spillway per MAG Det. 550
4. Sta. 3+400, 16.1 m Lt. to 15.2 m Rt. Construct New Pedestrian Underpass, see Bridge Plans for Details, Sheet S29
5. Sta. 3+391, 10.9 m to Sta. 3+410, 10.9 m Rt. Install 20 m Guardrail per MCDOT Details 2036, Type "A" & 2039
6. Sta. 3+410, 10.9 m Rt. Install Guardrail Anchor Assembly per MCDOT Detail 2042
7. Sta. 3+450, 12.3 m to 17.9 m Lt. Construct Embankment Spillway Per MAG Detail 550
8. Sta. 3+380, 12.1 m to Sta. 3+391, 10.9 m Rt. Install 11 m Guardrail & BCT per MCDOT Details 2040 & 2041

NO.	REVISION	BY	DATE
1			
2			
3			

MARICOPA COUNTY
DEPARTMENT OF TRANSPORTATION
ENGINEERING DIVISION

116TH AVENUE BRIDGE
OVER GILA RIVER
PROJECT NO. 68832

	BY	DATE
DESIGNED	ROBERT MEYERS	2/96
DRAWN	B. VAN HORN	7/96
CHECKED	J. S. PEGANY	7/96

Registered Professional Engineer CERTIFICATE NO. 6207 J. S. PEGANY ARIZONA U.S.A.

ENGINEERING ALLIANCE, INC.
737 E Bethany Home Rd Suite C-100 (602) 245-6203
PHOENIX, ARIZONA 85014

PAVING PLAN AND PROFILE
STA 3+350 TO STA 3+500

SHEET P12 OF 24

TRACS NO. SS345010

F.W.H.A. REGION	STATE	PROJECT NO.	SHEET NO.	TOTAL SHEETS	RECORD DRAWING
9	AZ.	STP-MMA-0(181)P	13	68	

☐ REMOVAL/RELOCATE ☐

RECORD DRAWING

RECORD DRAWING NOTATIONS

These record drawings reflect certain dimensions, details, specifications, and plan revisions prepared by others or obtained from other record drawings which have not been independently verified by Entranco. As a result, Entranco is not responsible for the accuracy, appropriateness or completeness of such information depicted in these record drawing notations.

ENTRANCO ENGINEERS, INC.
DATE: 8-10-99

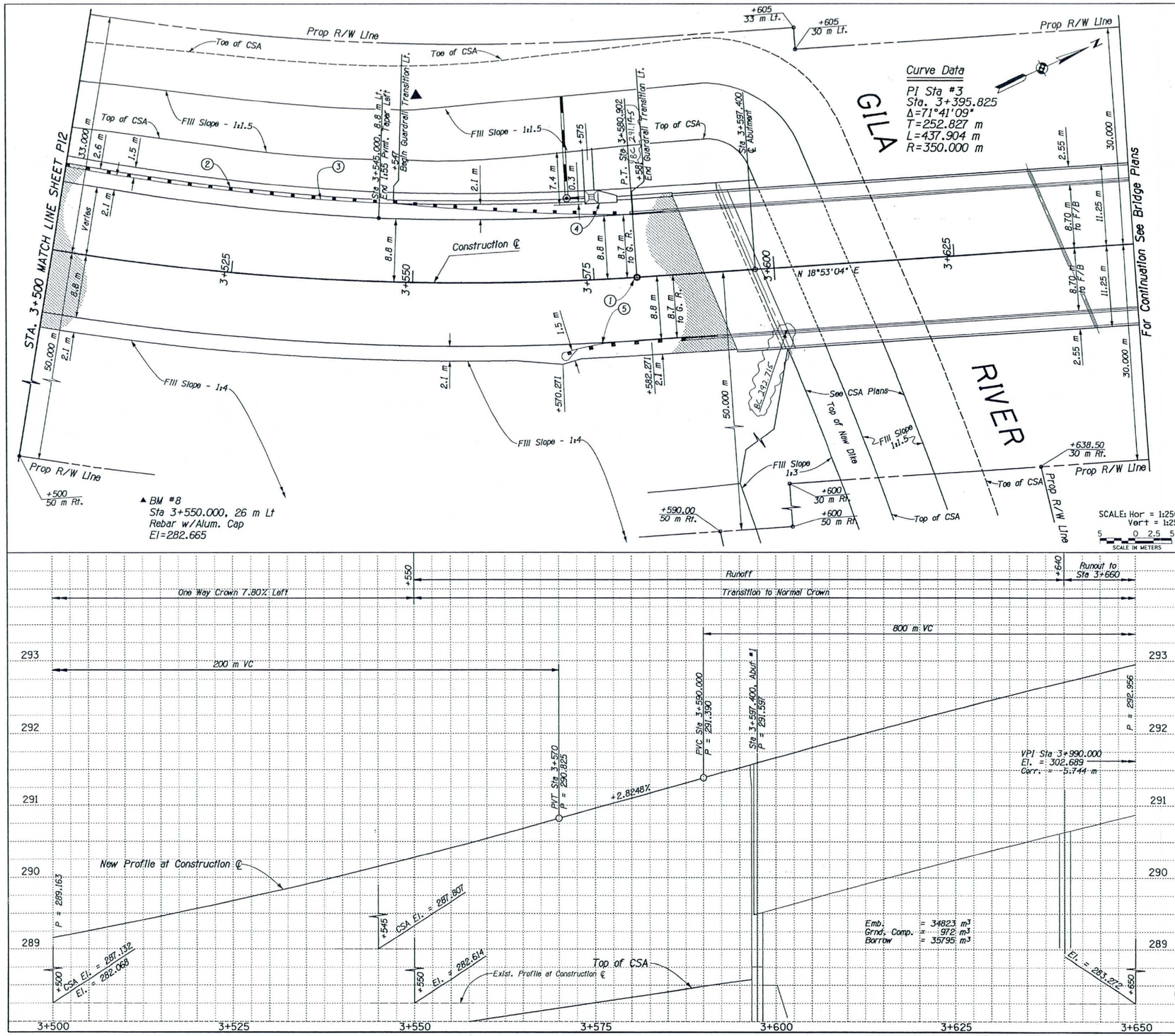

CONSTRUCTION

1. Sta. 3+580.902
   Install Brass Cap per MAG Det. 120-2, Type 'D'
2. Sta. 3+500, 11.718 m to Sta. 3+587.174, 8.7 m Lt.
   Install 84 m Guardrail per MCDOT Det. 2036 Type "A", 2039 & 2044 and Barrier Transition.
3. Sta. 3+500, 11.718 m to Sta. 3+586.489, 10.9 m Lt.
   Construct 79 m Embankment Curb See Detail C, Sheet P23
4. Sta. 3+575, 10.6 m to 18.0 m Lt.
   Construct Embankment Spillway per MAG Det. 550
   Sta. 3+575, 11.7 m Lt.
   Construct Catch Basin Type G, Single, per MAG Det 537.
   Sta. 3+572, 11.7 m Lt.
   Construct Manhole per MAG Det 422, Modified.
   Install New 380 mm x 2 m RGRCP
   Install New 300 mm x 10.6 m RGRCP with Flap Valve, See Detail F, Sheet P19.
5. Sta. 3+570.271, 9.9 m to Sta. 3+593.166, 8.7 m Rt.
   Install 23 m Guardrail, BCT & Barrier Transition per MCDOT Dets. 2036, Type "A", 2039, 2040, 2041 & 2044.

NO.	REVISION	BY	DATE
1			
2			
3			

MARICOPA COUNTY
DEPARTMENT OF TRANSPORTATION
ENGINEERING DIVISION

116TH AVENUE BRIDGE
OVER GILA RIVER
PROJECT NO. 68832

	BY	DATE
DESIGNED	ROBERT MEYERS	2/96
DRAWN	B. VAN HORN	7/96
CHECKED	J. S. PEGANY	7/96

Registered Professional Engineer CERTIFICATE NO. 6207 JOHN S. PEGANY ARIZONA, U.S.A. 8/7/99

ENGINEERING ALLIANCE, INC.
727 E Bethany Home Rd Suite C-100 (602) 245-6203
PHOENIX, ARIZONA 85014

PAVING PLAN AND PROFILE
STA 3+500 TO STA 3+650

SHEET P13 OF 24

TRACS NO. SS3450IC

F:\plg-data\projects\641468\dgn\cr Aug. 06, 1997 13:58:48

F.W.H.A. REGION	STATE	PROJECT NO.	SHEET NO.	TOTAL SHEETS	RECORD DRAWING
9	AZ.	STP-MMA-0(181)P	14	68	

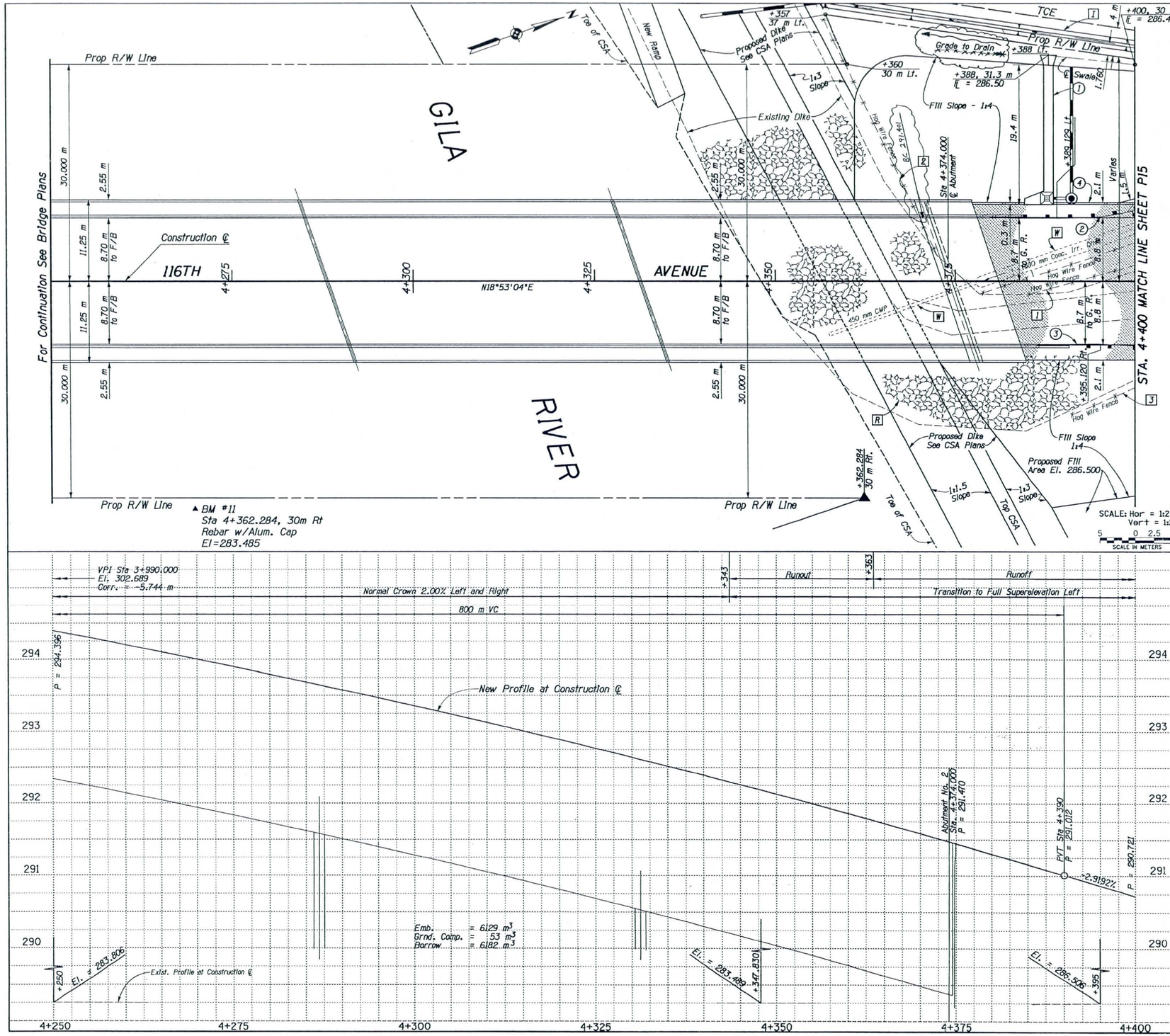

REMOVAL/RELOCATE

1. Sta. 4+385, Rt. to Sta. 4+400, Lt.
   Remove 15 m Hog Wire Fence - LSR
2. Sta. 4+357 to Sta. 4+400, Lt.
   Relocate 66 m Hog Wire Fence to R/W Line - LSR
3. Sta. 4+391 to Sta. 4+400, Rt.
   Remove 10 m Hog Wire Fence - LSR

RECORD DRAWING

RECORD DRAWING NOTATIONS

These record drawings reflect certain dimensions, details, specifications, and plan revisions prepared by others or obtained from other record drawings which have not been independently verified by Entranco. As a result, Entranco is not responsible for the accuracy, appropriateness or completeness of such information depicted in these record drawing notations.

ENTRANCO ENGINEERS, INC.
DATE: 8-10-99

R Contractor may salvage Existing Dike Rip Rap at his option

W For Irrigation Removals, See Sheet W1

LSR - Part of Lump Sum Removal Item

CONSTRUCTION

1. Sta. 4+388, 10.6 m to 30.0 m Lt.
   Construct Embankment Spillway with Outlet per MAG Det. 550
   Sta. 4+388, 11.7 m Lt.
   Construct Catch Basin Type G, Single per MAG Det. 537
   Sta. 4+391, 11.7 m Lt.
   Construct Manhole per MAG Det. 422, Modified
   Install New 380 mm x 2 m RGRCP
   Install New 300 mm x 18.2 m RGRCP with Flap Valve,
   See Detail F, Sheet P19.
2. Sta. 4+378.234, 8.7 m Lt. to Sta. 4+401.234, 9.9 m Lt.
   Install 23 m Guardrail, BCT & Barrier Transition per MCDOT Dets. 2036 Type "A", 2039, 2040, 2041 & 2044.
3. Sta. 4+384.226, 8.7 m Rt. to Sta. 4+407.226, 9.9 m Rt.
   Install 23 m Guardrail, BCT & Barrier Transition per MCDOT Dets. 2039, 2040, 2041 & 2044.
4. Sta. 4+377.129, 10.6 m Lt. to Sta. 4+400, 10.6 m Lt.
   Construct 19 m Embankment Curb, See Detail C, Sheet P23.

I For Irrigation Construction See Sheet W1

NO.	REVISION	BY	DATE
1			
2			
3			

MARICOPA COUNTY
DEPARTMENT OF TRANSPORTATION
ENGINEERING DIVISION

116TH AVENUE BRIDGE
OVER GILA RIVER
PROJECT NO. 68832

	BY	DATE
DESIGNED	ROBERT MEYERS	2/96
DRAWN	B. VAN HORN	7/96
CHECKED	J. S. PEGANY	7/96

Registered Professional Engineer CERTIFICATE NO. 6207 J. S. PEGANY ARIZONA U.S.A.

ENGINEERING ALLIANCE, INC.
727 E. Bethany Home Rd. Suite D-200 (602) 248-0203
PHOENIX, ARIZONA 85014

PAVING PLAN AND PROFILE
BRIDGE TO STA 4+400

SHEET OF
P14 24

TRACS NO. SS3450IC

I:\ptg-data\projects\841466\dgn\cr Aug. 06, 1997 13:59:45

F.W.H.A. REGION	STATE	PROJECT NO.	SHEET NO.	TOTAL SHEETS	RECORD DRAWING
9	AZ.	STP.MMA-0(18)F	33	68	

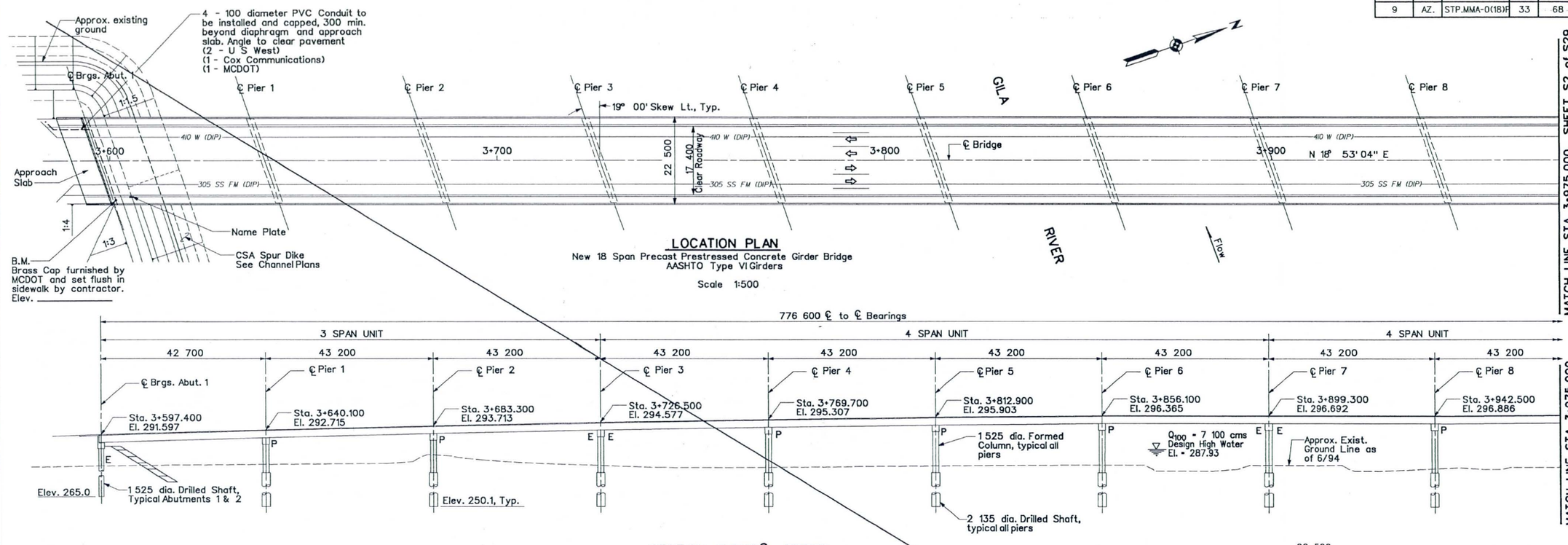

LOCATION PLAN

New 18 Span Precast Prestressed Concrete Girder Bridge
AASHTO Type VI Girders

Scale 1:500

SECTION ALONG ℄ BRIDGE

Scale 1:500

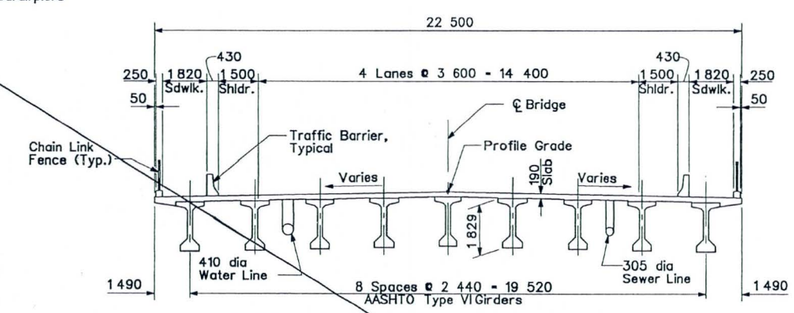

TYPICAL BRIDGE CROSS SECTION

Scale 1:100

SEE SHEET S1A

GENERAL NOTES:

CONSTRUCTION:
Maricopa Association of Governments Uniform Standard Specifications for Public Works Construction, 1996 Metric Edition, including all supplements and amendments by MCDOT and the Project Special Provisions.

DESIGN:
AASHTO Standard Specifications for Highway Bridges, 1992 Edition, revised to date. Metric Units.

DEAD LOAD:
Dead Load includes allowance of 1.2 kN/m ^{2} for future wearing surface.

LOADING CLASS: AASHTO MS18-44

STRESSES:

CONCRETE:

Abutments	f'c	= 27 MPa - Class AA
Piers	f'c	= 27 MPa
Deck	f'c	= 27 MPa
Girders	f'c	= 45 MPa - Class Special
All other Concrete	f'c	= 21 MPa - Class A

REINFORCING STEEL: ASTM A615M
Grade 400 f's = 165 MPa

PRESTRESSING STEEL:
12.70 mm dia. 7-wire low-relaxation strand f's = 1860 MPa

Prestressing Steel shall conform to ASTM A416.

STRUCTURAL STEEL: ASTM A36M

All placement dimensions for reinforcing steel shall be to the center of the bar unless otherwise noted.

All bend dimensions for reinforcing steel shall be measured out to out unless otherwise noted.

All reinforcing steel shall have a minimum 50 mm clear cover unless otherwise noted.

Chamfer all exposed concrete edges and corners 20 mm, unless otherwise noted.

All welding shall conform to the requirements of the American Welding Society Structural Welding Code D1.1-92, revised to date.

Dimensions shall not be scaled from drawings.

All dimensions are in millimeters (mm) and all elevations are in meters (m).

INDEX TO BRIDGE PLANS

SHEET NO.	TITLE
S1	LOCATION PLAN - 1
S2	LOCATION PLAN - 2
S3	FOUNDATION PLAN
S4	LOCATION OF TEST BORINGS
S5	LOG OF TEST BORINGS - 1
S6	LOG OF TEST BORINGS - 2
S7	LOG OF TEST BORINGS - 3
S8	LOG OF TEST BORINGS - 4
S9	LOG OF TEST BORINGS - 5
S10	LOG OF TEST BORINGS - 6
S11	LOG OF TEST BORINGS - 7
S12	ABUTMENT 1
S13	ABUTMENT 2
S14	ABUTMENT DETAILS
S15	ABUTMENT AND WINGWALL DETAILS
S16	PIER PLAN AND ELEVATION
S17	PIER DETAILS
S18	GIRDER LAYOUT
S19	GIRDER DETAILS - 1
S20	GIRDER DETAILS - 2
S21	DECK DETAILS - 1
S22	DECK DETAILS - 2
S23	DECK DETAILS - 3
S24	DECK DETAILS - 4
S25	MISCELLANEOUS DETAILS - 1
S26	MISCELLANEOUS DETAILS - 2
S27	DECK JOINT DETAILS
S28	PEDESTRIAN UNDERPASS PLAN
S29	PEDESTRIAN UNDERPASS DETAILS

RECORD DRAWING

RECORD DRAWING NOTATIONS

These record drawings reflect certain dimensions, details, specifications, and plan revisions prepared by others or obtained from other record drawings which have not been independently verified by Entranco. As a result, Entranco is not responsible for the accuracy, appropriateness or completeness of such information depicted in these record drawing notations.

ENTRANCO ENGINEERS, INC.
DATE: 8-10-99

NO.	REVISION	BY	DATE
1			
2			
3			

MARICOPA COUNTY
DEPARTMENT OF TRANSPORTATION
ENGINEERING DIVISION

116TH AVENUE BRIDGE
OVER GILA RIVER

	BY	DATE
DESIGNED	B. YACH	9/94
DRAWN	J. GILMORE	9/94
CHECKED	V. WISMER	6/95

HOFFMAN-MILLER ENGINEERS, INC
PHOENIX ARIZONA

LOCATION PLAN - 1

SHEET S1 OF S29

TRACS NO. SS34501C

FILE NAME MB.DGN 12/02/94

f:\ptg\data\projects\E41465\dgn\68 Aug. 05, 1997 09:12:32

F.H.W.A. REGION	STATE	PROJECT NO.	SHEET NO.	TOTAL SHEETS	RECORD DRAWING
9	AZ.	STP-MMA-0(18)P	33A		

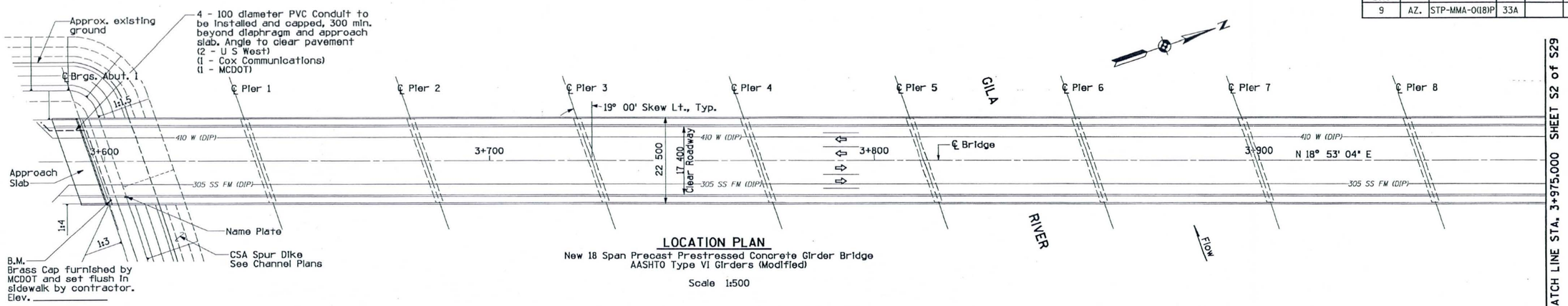

LOCATION PLAN

New 18 Span Precast Prestressed Concrete Girder Bridge
AASHTO Type VI Girders (Modified)

Scale 1:500

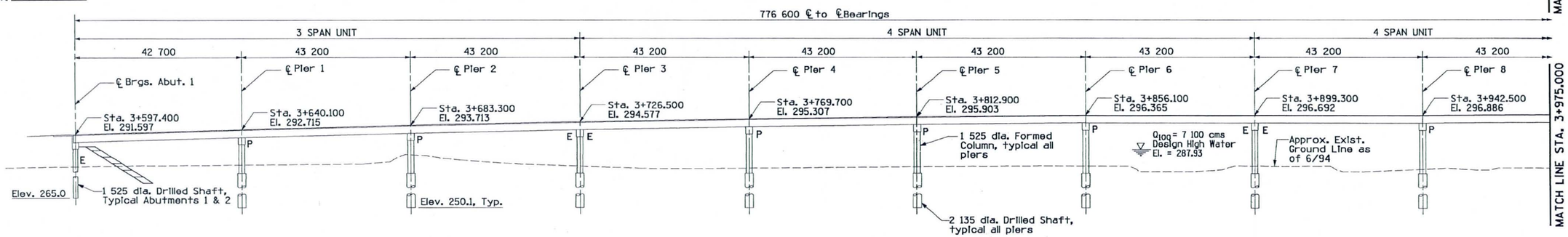

SECTION ALONG ℄ BRIDGE

Scale 1 : 500

GENERAL NOTES:

CONSTRUCTION:
Maricopa Association of Governments Uniform Standard Specifications for Public Works Construction, 1996 Metric Edition, including all supplements and amendments by MCDOT and the Project Special Provisions.

DESIGN:
AASHTO Standard Specifications for Highway Bridges, 1992 Edition, revised to date. Metric Units.

DEAD LOAD:
Dead Load includes allowance of 1.2 kN/m² for future wearing surface.

LOADING CLASS: AASHTO MS18-44

STRESSES:

CONCRETE:

Abutments	f'c	= 27 MPa - Class AA
Piers	f'c	= 27 MPa
Deck	f'c	= 27 MPa
Girders	f'c	= 45 MPa - Class Special
All other Concrete	f'c	= 21 MPa - Class A

REINFORCING STEEL: ASTM A615M
Grade 400 f's = 165 MPa

PRESTRESSING STEEL:
12.70 mm dia. 7-wire low-relaxation strand f's = 1860 MPa

Prestressing Steel shall conform to ASTM A416.

STRUCTURAL STEEL: ASTM A36M

All placement dimensions for reinforcing steel shall be to the center of the bar unless otherwise noted.

All bend dimensions for reinforcing steel shall be measured out to out unless otherwise noted.

All reinforcing steel shall have a minimum 50 mm clear cover unless otherwise noted.

Chamfer all exposed concrete edges and corners 20 mm, unless otherwise noted.

All welding shall conform to the requirements of the American Welding Society Structural Welding Code D1.1-92, revised to date.

Dimensions shall not be scaled from drawings.

All dimensions are in millimeters (mm) and all elevations are in meters (m).

INDEX TO BRIDGE PLANS

SHEET NO.	TITLE
S1	LOCATION PLAN - 1
S2	LOCATION PLAN - 2
S3	FOUNDATION PLAN
S4	LOCATION OF TEST BORINGS
S5	LOG OF TEST BORINGS - 1
S6	LOG OF TEST BORINGS - 2
S7	LOG OF TEST BORINGS - 3
S8	LOG OF TEST BORINGS - 4
S9	LOG OF TEST BORINGS - 5
S10	LOG OF TEST BORINGS - 6
S11	LOG OF TEST BORINGS - 7
S12	ABUTMENT 1
S13	ABUTMENT 2
S14	ABUTMENT DETAILS
S15	ABUTMENT AND WINGWALL DETAILS
S16	PIER PLAN AND ELEVATION
S17	PIER DETAILS
S18	GIRDER LAYOUT
S19	GIRDER DETAILS - 1
S20	GIRDER DETAILS - 2
S21	DECK DETAILS - 1
S22	DECK DETAILS - 2
S23	DECK DETAILS - 3
S24	DECK DETAILS - 4
S25	MISCELLANEOUS DETAILS - 1
S26	MISCELLANEOUS DETAILS - 2
S27	DECK JOINT DETAILS
S28	PEDESTRIAN UNDERPASS PLAN
S29	PEDESTRIAN UNDERPASS DETAILS

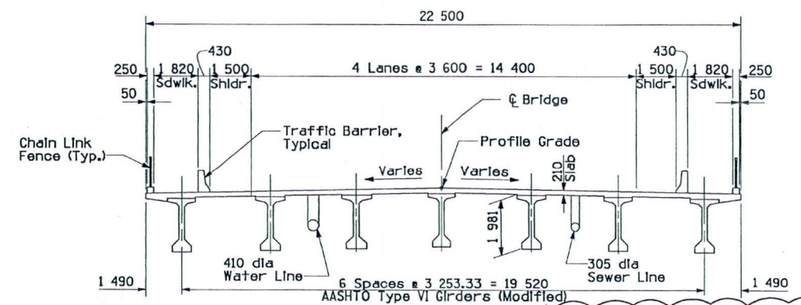

TYPICAL BRIDGE CROSS SECTION

Scale 1:100

This Sheet to Replace Sheet S1

RECORD DRAWING

RECORD DRAWING NOTATIONS

These record drawings reflect certain dimensions, details, specifications, and plan revisions prepared by others or obtained from other record drawings which have not been independently verified by Entranco. As a result, Entranco is not responsible for the accuracy, appropriateness or completeness of such information depicted in these record drawing notations.

ENTRANCO ENGINEERS, INC.
DATE: 8-10-99

TO ACCOMPANY CICOP #1

NO.	REVISION	BY	DATE
1	Revised per Value Engineering	JG	12/97
2			
3			

MARICOPA COUNTY
DEPARTMENT OF TRANSPORTATION
ENGINEERING DIVISION

116TH AVENUE BRIDGE
OVER GILA RIVER

	BY	DATE
DESIGNED	B. YACH	9/94
DRAWN	J. GILMORE	9/94
CHECKED	V. WISMER	6/95

Registered Professional Engineer (Civil) CERTIFICATE NO. 8423 DONALD R. DAVIS Date Signed 7/28/97 ARIZONA, U.S.A.

HOFFMAN-MILLER ENGINEERS, INC.
PHOENIX ARIZONA

LOCATION PLAN - 1

SHEET OF S1A

TRACS NO. SS34501C

FILE
DATE
TIME
MS100N 12/02/94

F.W.H.A. REGION	STATE	PROJECT NO.	SHEET NO.	TOTAL SHEETS	RECORD DRAWING
9	AZ.	STP.MMA-0(18)F	34	68	

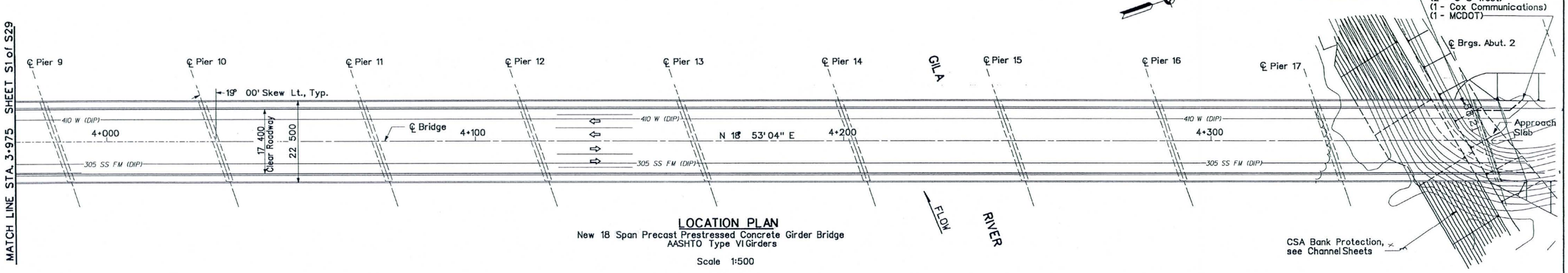

LOCATION PLAN

New 18 Span Precast Prestressed Concrete Girder Bridge
AASHTO Type VI Girders

Scale 1:500

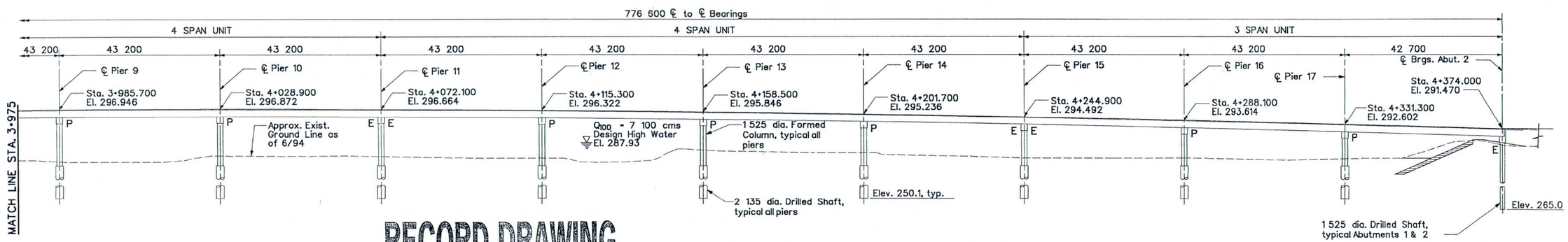

SECTION ALONG ℄ BRIDGE

Scale 1:500

RECORD DRAWING

RECORD DRAWING NOTATIONS

These record drawings reflect certain dimensions, details, specifications, and plan revisions prepared by others or obtained from other record drawings which have not been independently verified by Entranco. As a result, Entranco is not responsible for the accuracy, appropriateness or completeness of such information depicted in these record drawing notations.

ENTRANCO ENGINEERS, INC.
DATE: 8-10-99

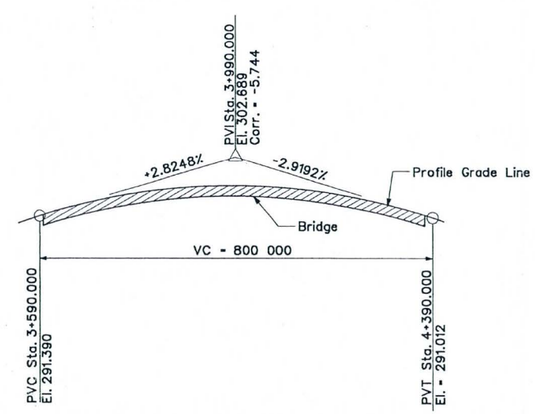

℄ BRIDGE AND PROFILE GRADE LINE

N.T.S.

NOTE: See Roadway Sheets for superelevation transitions at each end of bridge.

APPROXIMATE BRIDGE QUANTITIES

ITEM	CONCRETE f'c - 21 MPa Cu. Meters	CONCRETE f'c - 27 MPa Cu. Meters	REINFORCING STEEL kg	PRESTRESSED GIRDERS Ea.	CHAIN LINK FENCE Meters	SHAFT DRILLING 1 525 Dia. Meters	SHAFT DRILLING 2 135 Dia. Meters
ABUTMENT 1		101	9850			92	
ABUTMENT 2		101	9850			91	
PIERS		2292	732,787				2169
SUPERSTRUCTURE		4389	426,953	162	1580		
APPROACH SLABS	87		6521				
DRILLED SHAFTS		8099	1,064,847				
BARRIER RAILS & CURB	465		51,710				
UNDERPASS	221		17,263		79		
TOTALS	773	14,982	2,319,781	162	1659	183	2169

NO.	REVISION	BY	DATE
1			
2			
3			

MARICOPA COUNTY
DEPARTMENT OF TRANSPORTATION
ENGINEERING DIVISION

116TH AVENUE BRIDGE
OVER GILA RIVER

	BY	DATE
DESIGNED	B. YACH	9/94
DRAWN	J. GILMORE	9/94
CHECKED	V. WISMER	6/95

HOFFMAN-MILLER ENGINEERS, INC
PHOENIX ARIZONA

LOCATION PLAN - 2

SHEET OF S2 S29

TRACS NO. SS34501C

FILE: LOCATION 1.DGN 12/02/94

f:\ptg-data\projects\541455\dgn\68 Aug. 05, 1997 09:14:33

F.H.W.A. REGION	STATE	PROJECT NO.	SHEET NO.	TOTAL SHEETS	RECORD DRAWING
9	AZ.	STP-MMA-0(18)P	35	68	

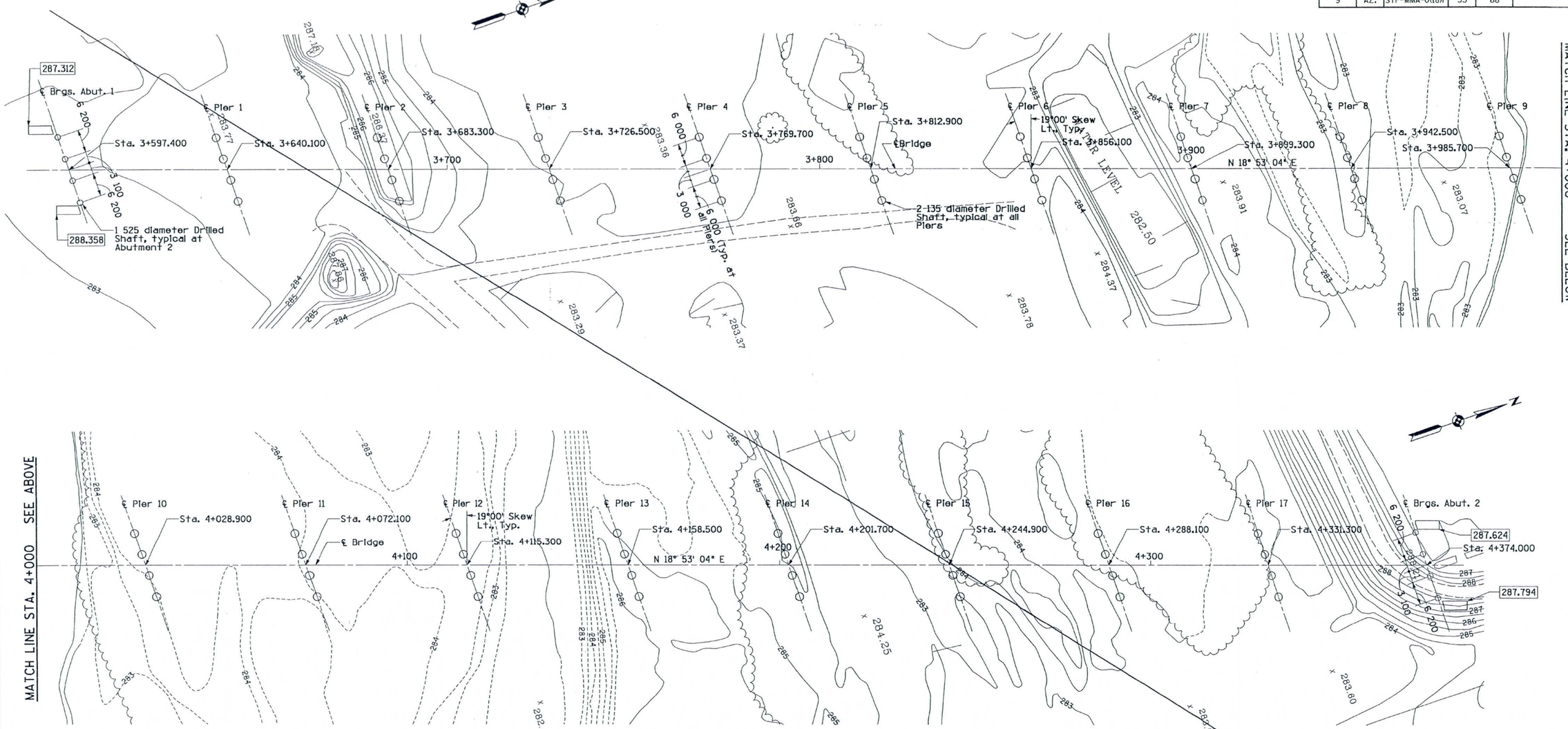

RECORD DRAWING

RECORD DRAWING NOTATIONS

These record drawings reflect certain dimensions, details, specifications, and plan revisions prepared by others or obtained from other record drawings which have not been independently verified by Entranco. As a result, Entranco is not responsible for the accuracy, appropriateness or completeness of such information depicted in these record drawing notations.

ENTRANCO ENGINEERS, INC.
DATE: 8-10-99

FOUNDATION PLAN

Scale 1:500

Contour Interval = 0.50 meter

☐ Indicates elevation at bottom of wingwall footings

SEE SHEET S3A

NO.	REVISION	BY	DATE
1			
2			
3			

MARICOPA COUNTY
DEPARTMENT OF TRANSPORTATION
ENGINEERING DIVISION

116TH AVENUE BRIDGE
OVER GILA RIVER

	BY	DATE
DESIGNED	B. YACH	9/94
DRAWN	J. GILMORE	9/94
CHECKED	V. WISMER	6/95

HOFFMAN-MILLER ENGINEERS, INC.
PHOENIX ARIZONA

FOUNDATION PLAN

SHEET OF
S3 S29

TRACS NO. SS3450IC

FILE: MB.DGN 12/02/94

F.H.W.A. REGION	STATE	PROJECT NO.	SHEET NO.	TOTAL SHEETS	RECORD DRAWING
9	AZ.	STP-MMA-0(18)P	35A		

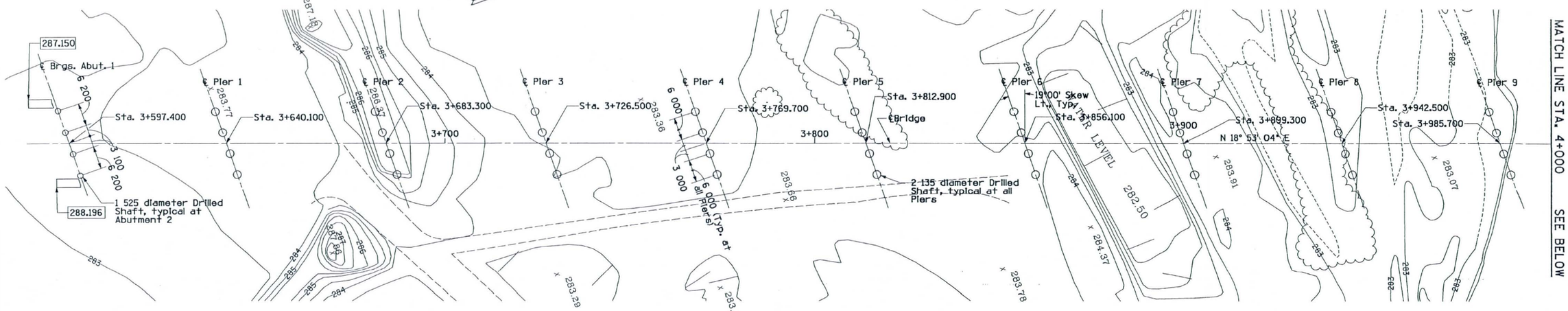

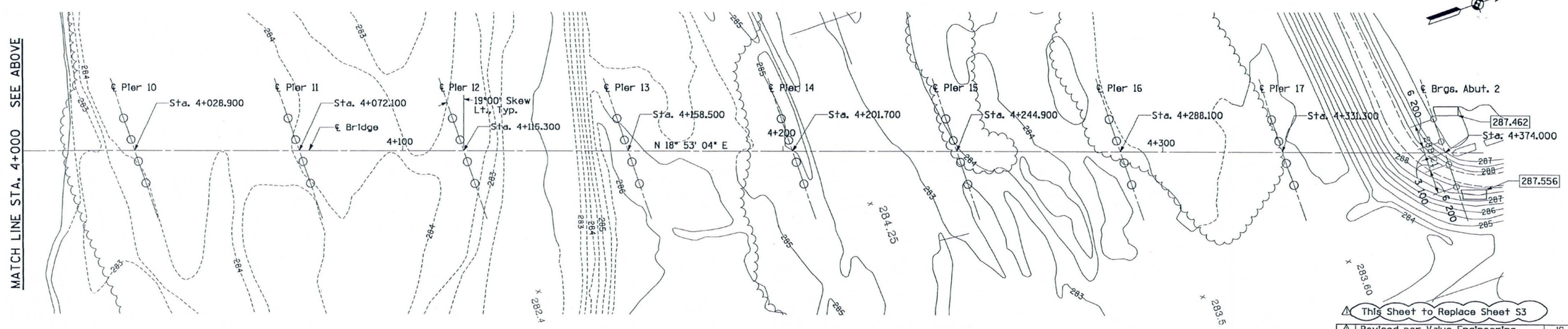

FOUNDATION PLAN
Scale 1:500
Contour Interval = 0.50 meter

Indicates elevation at bottom of wingwall footings

This Sheet to Replace Sheet S3

NO.	REVISION	BY	DATE
1	Revised per Value Engineering	JG	12/97
2			
3			

RECORD DRAWING

RECORD DRAWING NOTATIONS

These record drawings reflect certain dimensions, details, specifications, and plan revisions prepared by others or obtained from other record drawings which have not been independently verified by Entranco. As a result, Entranco is not responsible for the accuracy, appropriateness or completeness of such information depicted in these record drawing notations.

ENTRANCO ENGINEERS, INC.
DATE: 8-10-99

TO ACCOMPANY CICOP #1

MARICOPA COUNTY
DEPARTMENT OF TRANSPORTATION
ENGINEERING DIVISION

116TH AVENUE BRIDGE
OVER GILA RIVER

	BY	DATE
DESIGNED	B. YACH	9/94
DRAWN	J. GILMORE	9/94
CHECKED	V. WISMER	6/95

Registered Professional Engineer (Civil) 8423 DONALD R. DAVIS Date Signed 8-10-99 Arizona, U.S.A.

HOFFMAN-MILLER ENGINEERS, INC.
PHOENIX ARIZONA

FOUNDATION PLAN

SHEET OF S3A

TRACS NO. SS3450IC

FILE
PLAN
MB.DGN 12/02/94

F.H.W.A. REGION	STATE	PROJECT NO.	SHEET NO.	TOTAL SHEETS	RECORD DRAWING
9	AZ.	STP-MMA-0(18)P	36	68	

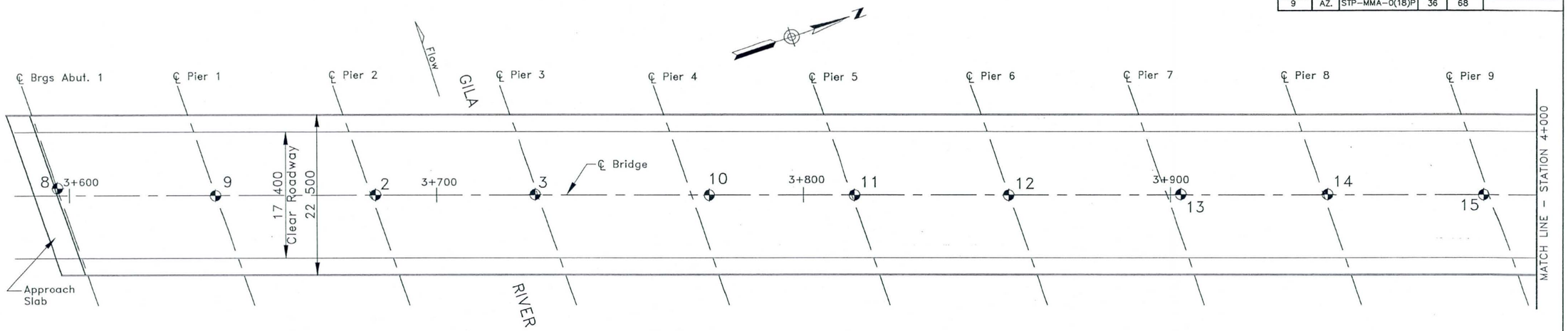

PLAN
SCALE 1:500

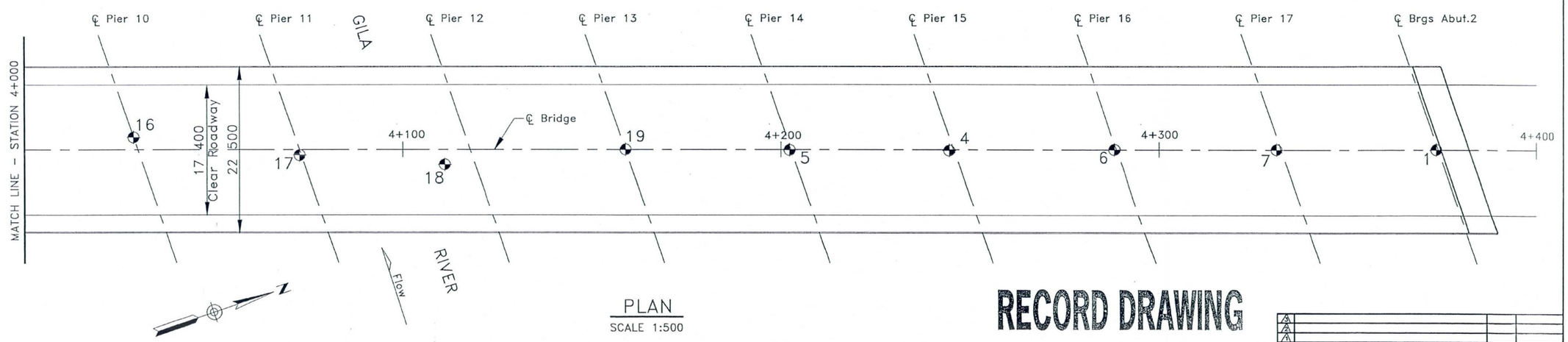

PLAN
SCALE 1:500

RECORD DRAWING

RECORD DRAWING NOTATIONS

These record drawings reflect certain dimensions, details, specifications, and plan revisions prepared by others or obtained from other record drawings which have not been independently verified by Entranco. As a result, Entranco is not responsible for the accuracy, appropriateness or completeness of such information depicted in these record drawing notations.

ENTRANCO ENGINEERS, INC.
DATE: 8-10-99

NO.	REVISION	BY	DATE
4			
3			
2			
1			

MARICOPA COUNTY
DEPARTMENT OF TRANSPORTATION
ENGINEERING DIVISION

116TH AVENUE BRIDGE
OVER GILA RIVER

Registered Professional Engineer (Civil) CERTIFICATE NO. 12176 NORMAN HAROLD WETZ Date Signed 8/7/95 ARIZONA, U.S.A.

	BY	DATE
DESIGNED	N.H. WETZ	7/95
DRAWN	T.M. PORTER	7/95
CHECKED	D.E. PETERSON	7/95

AGRA
Earth & Environmental

LOCATION OF TEST BORINGS

SHEET OF S4 S29

TRACS NO. SS34501C

mcdotstd.bdr 10/18/94

F.H.W.A. REGION	STATE	PROJECT NO.	SHEET NO.	TOTAL SHEETS	RECORD DRAWING
9	AZ.	STP-MMA-0(18)P	37	68	

RECORD DRAWING

RECORD DRAWING NOTATIONS

These record drawings reflect certain dimensions, details, specifications, and plan revisions prepared by others or obtained from other record drawings which have not been independently verified by Entranco. As a result, Entranco is not responsible for the accuracy, appropriateness or completeness of such information depicted in these record drawing notations.

ENTRANCO ENGINEERS, INC.
DATE: 8-10-99

LOG OF TEST BORING NO. 1

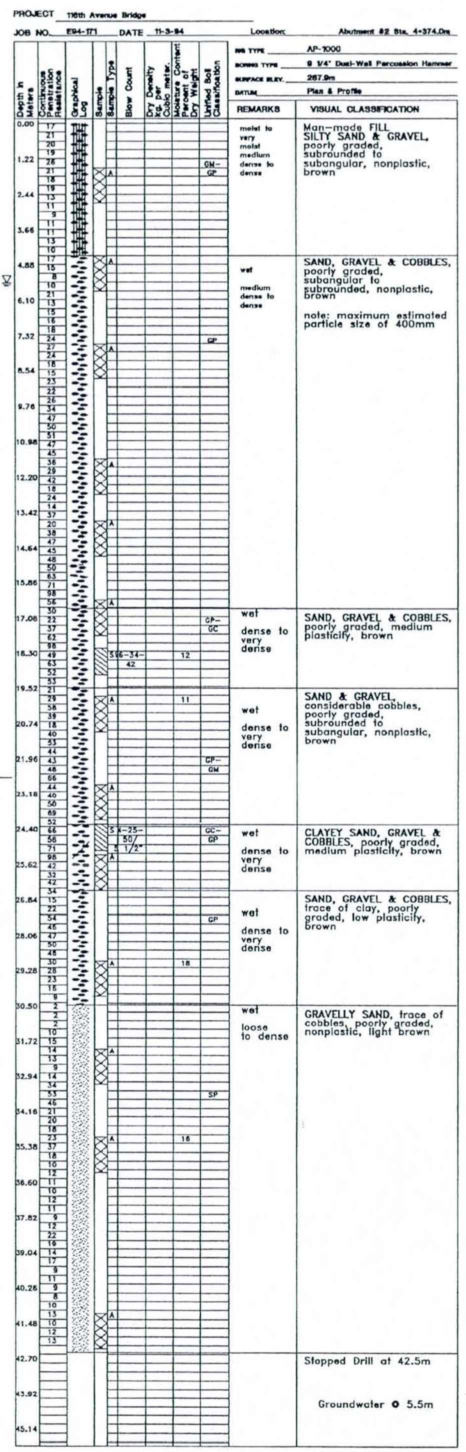

Elev. 265.0
Pile Tip @ Abut. 2

LOG OF TEST BORING NO. 2

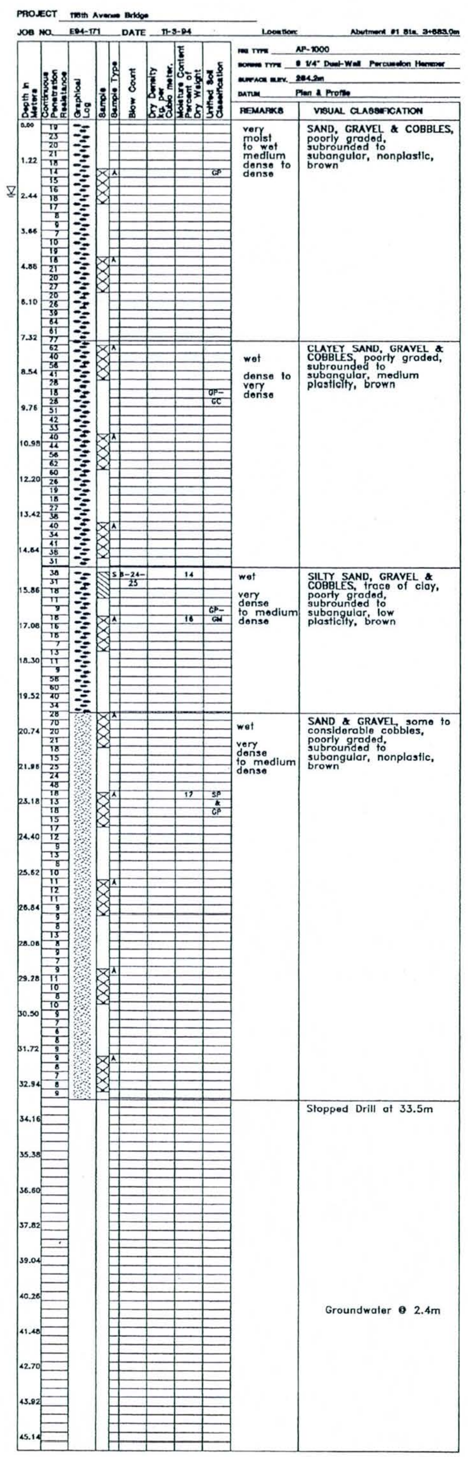

LOG OF TEST BORING NO. 3

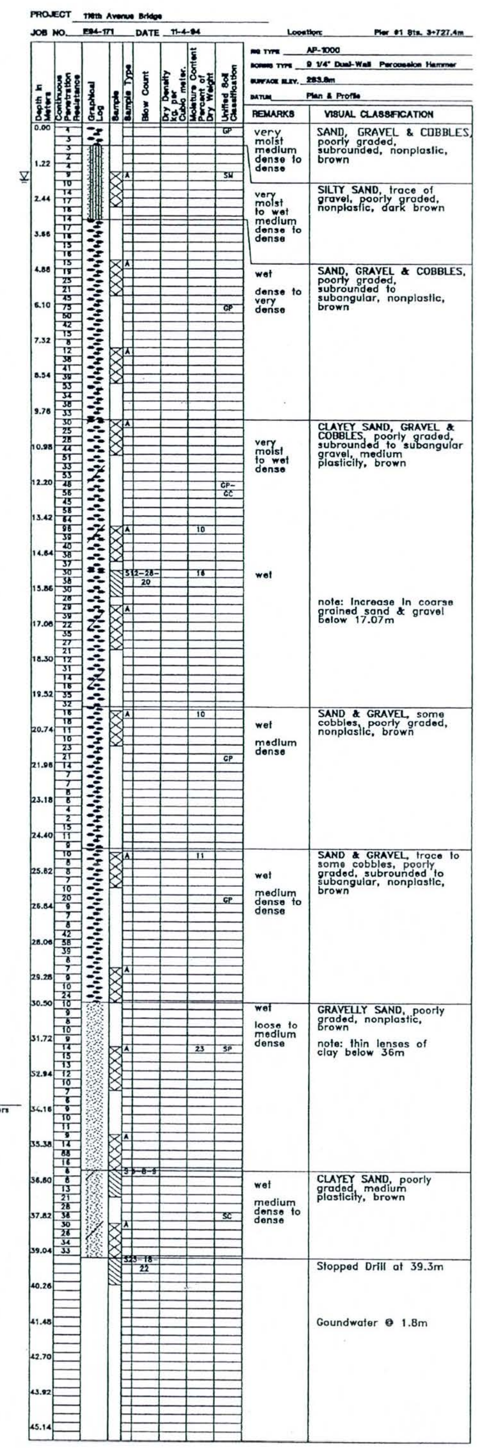

Elev. 250.1
Pile Tip @ Piers

NOTE:

The boring logs show subsurface conditions at the dates and locations shown in AEE Job No. E94-171, and it is not warranted that they are representative of subsurface conditions at other locations and times.

The sand gravel and cobble (SGC) deposits contain occasional boulders.

Classification of soil materials is visual unless accompanied by lab testing presented in the Geotechnical Investigation Report, prepared by Agra Earth & Environmental, Inc., Project No. E94-171.

The absence of a ground water indication does not constitute a representation that the ground water will not be present during construction. Ground water is indicated herein only when found during the foundation investigation and represents that condition only on the date of the investigation.

Tube samplers are driven with a 63.5 Kg hammer with 762 mm free falls, no cushion.

SAMPLE TYPE KEY

A – Auger Cuttings

S – 50.8mm O.D. 35mm I.D. tube sampler
Blows are recorded every 152.4 mm of penetration

NO.	REVISION	BY	DATE
3			
2			
1			

MARICOPA COUNTY
DEPARTMENT OF TRANSPORTATION
ENGINEERING DIVISION

116TH AVENUE BRIDGE
OVER GILA RIVER

Registered Professional Engineer — Certificate No. 12176 — NORMAN HAROLD WETZ — Date Signed 8/7/97 — ARIZONA, U.S.A.

	BY	DATE
DESIGNED	N.H. WETZ	7/95
DRAWN	T.M. PORTER	7/95
CHECKED	D.E. PETERSON	7/95

AGRA Earth & Environmental

LOG OF TEST BORINGS-1	SHEET OF S5 S29

TRACS NO. SS34501C

mcdotstd.bdr 10/18/94

F.H.W.A. REGION	STATE	PROJECT NO.	SHEET NO.	TOTAL SHEETS	RECORD DRAWING
9	AZ.	STP-MMA-0(18)	38	68	

RECORD DRAWING

LOG OF TEST BORING NO. 4

PROJECT 116th Avenue Bridge
JOB NO. E94-171 DATE 11-4-94 Location: Pier #13 Sta. 4+245.0m
RIG TYPE AP-1000
BORING TYPE 8 1/4" Dual-Wall Percussion Hammer
SURFACE ELEV. 283.8m
DATUM Pier & Profile

Depth in Meters	Approximate Penetration Resistance	Graphical Log	Sample	Sample Type	Blow Count	Dry Density Lb. per Cu. Ft.	Moisture Content Percent Dry Weight	Unified Soil Classification	REMARKS	VISUAL CLASSIFICATION
0.00	4								moist to very moist medium dense to dense	GRAVELLY SAND, some cobbles, poorly graded, nonplastic, brown
	6									
	7									
1.22	8									
	11		X	A				SP		
	15		X							
	18		X							
2.44	12		X							
	16									
	28									
3.66	20									
	11									
	12									
	18									
4.88	17		X	A						
	15		X							
	16		X							
	13									
6.10	19									
	24									
	21								wet dense to very dense	SAND, GRAVEL & COBBLES, poorly graded, subangular, nonplastic, brown
7.32	21									
	18		X	A				GP		
	15		X							
	21		X							
8.54	18		X							
	10									
	12									
	15									
9.76	24									
	21									
	17									
	24		X	A						
10.98	23		X							
	23		X							
	28		X							
	34									
12.20	33									
	29		X	A			16			
	37		X						wet dense to very dense	SILTY SAND, GRAVEL & COBBLES, poorly graded, subrounded to subangular, medium plasticity, brown
	42		X							
13.42	28		X					GP-GM		
	29		X							
	47									
14.64	28				22-44					
	42		S				13			
	38									
	47									
15.86	77								wet very dense to dense	CLAYEY SAND, GRAVEL & COBBLES, well graded, low to medium plasticity, brown
	77									
	41									
	49		X	A			15	CW-SC		
17.08	30		X							
	27		X							
	25		X							
	45									
18.30	44									
	87									
	45									
	32									
19.52	28									
	29									
	34		X							
	43		X							
20.74	39		X							
	40		X		21-11					
	44									
21.96	33									
	64		X	A			11			
	53		X						wet dense to very dense	SAND, GRAVEL & COBBLES, well graded, subrounded to subangular, nonplastic, brown
23.18	35		X							
	47		X							
	45		X							
	34									
24.40	33							CW		
	42									
	44									
	21									
25.62	21									
	34		X							
	22		X							
	22		X							
26.84	30		X							
	28		X							
	24									
	44									
28.06	36									
	44		X	A				SC-CW	wet dense	CLAYEY SAND, GRAVEL & COBBLES, well graded, medium plasticity, brown
	25		X							
29.28	40		X							
	23		X							
	16									
	22									
30.50	14									
	15									
	23								wet, dense dense	GRAVELLY SAND, trace to some cobbles, poorly graded, nonplastic, brown
	28									
31.72	19									
	31		X	A				SP		
	26		X							
32.94	25		X							
	26		X							
	14									
	17									
34.16	18									
	15									
	15									
	16		X	A			28			
35.38	26		X							
	25		X							
	23		X							
	34									
36.60	18									
	22									
	18									
	31									
37.82	18									
	17		X	A				GW		
	15		X							
	13		X							
39.04	12		X							
40.26										Stopped Drill at 39.5m
41.48										
42.70										Groundwater @ 1.1m
43.92										
45.14										

LOG OF TEST BORING NO. 5

PROJECT 116th Avenue Bridge
JOB NO. E94-171 DATE 11-7-94 Location: Pier #12 Sta. 4+201.8m
RIG TYPE AP-1000
BORING TYPE 8 1/4" Dual-Wall Percussion Hammer
SURFACE ELEV. 283.8m
DATUM Pier & Profile

Depth in Meters	Approximate Penetration Resistance	Graphical Log	Sample	Sample Type	Blow Count	Dry Density Lb. per Cu. Ft.	Moisture Content Percent Dry Weight	Unified Soil Classification	REMARKS	VISUAL CLASSIFICATION
0.00	7								moist to wet loose to dense	GRAVELLY SAND, poorly graded, subrounded to subangular, nonplastic, brown
	4									
	4									
1.22	15									
	9		X	A				SP		
	13		X							
2.44	22		X							
	27									
	35									
3.66	31									
	20									
	14									
	14									
4.88	13		X	A						
	13		X							
	19									
6.10	14								wet medium dense to dense	SAND, GRAVEL & COBBLES, poorly graded, subrounded to rounded, nonplastic, brown
	15									
7.32	25									
	24		X	A				GP		
	26		X							
8.54	31									
	40									
	29									
9.76	23									
	24									
	31		X	A						
10.98	30		X							
	21		X							
	16									
12.20	10									
	23									
	49									
13.42	28		X	A						
	27		X							
	44		X					SC-GP	wet dense to very dense	CLAYEY SAND, GRAVEL & COBBLES, poorly graded, subrounded to subangular, low to medium plasticity, brown
14.64	36		X							
	34		X		11-34-33					
	34		X							
15.86	28									
	37									
	38									
	60		X	A						
17.08	60		X							
	59		X							
	45		X							
18.30	32									
	22									
	33									
19.52	82									
	56		X	A						
	46		X							
20.74	44		X							
	22				13-2-9					
	24									
21.96	45								wet dense	SAND & GRAVEL, some to considerable cobbles, well graded, subrounded to subangular, nonplastic, brown
	37		X	A						
	29		X							
	20		X							
23.18	22		X					GW		
	39		X							
	34									
	27									
24.40	36									
	30									
	33									
	30									
25.62	29									
	26		X	A						
	23		X							
26.84	22		X						wet dense to very dense	SAND & GRAVEL, some to considerable cobbles, poorly graded, nonplastic, brown
	28		X					GP		
	18									
28.06	31		X	A						
	37		X							
	30		X							
	31									
29.28	30									
	42									
	19									
	24									
30.50	33									
	38							GP	wet dense to very dense	SAND & GRAVEL, some clay, occasional cobbles, coarse grained sand, fine grained gravel, subrounded to subangular, nonplastic, brown
	50									
31.72	35									
	17		X	A						
	18		X							
32.94	17		X							
	20									
	16									
	18								wet dense to very dense	GRAVELLY SAND, poorly graded, subrounded to subangular, nonplastic, brown note: some thin lenses of clay below 32.5m
34.16	13									
	11									
	11									
	12							SP		
35.38	9		X	A						
	17		X							
	14		X							
	16									
36.60	13									
	12									
	16		X	A						
	18									
37.82	15		X							
	14		X	A						
	16		X							
	17		X							
39.04	13		X							
40.26										Stopped Drill at 39.3m
41.48										
42.70										Groundwater @ 0.6m
43.92										
45.14										

LOG OF TEST BORING NO. 6

PROJECT 116th Avenue Bridge
JOB NO. E94-171 DATE 11-7-94 Location: Pier #14 Sta. 4+258.2m
RIG TYPE AP-1000
BORING TYPE 8 1/4" Dual-Wall Percussion Hammer
SURFACE ELEV. 283.8m
DATUM Pier & Profile

Depth in Meters	Approximate Penetration Resistance	Graphical Log	Sample	Sample Type	Blow Count	Dry Density Lb. per Cu. Ft.	Moisture Content Percent Dry Weight	Unified Soil Classification	REMARKS	VISUAL CLASSIFICATION
0.00	7								very moist to wet loose to dense	SAND & GRAVEL, some to considerable cobbles, poorly graded, subrounded to subangular, nonplastic, brown
	13									
	22									
1.22	25									
	24		X	A						
	11		X							
2.44	10		X							
	7									
	19									
3.66	24									
	22									
	19									
	23									
4.88	19		X	A				GP		
	14		X							
	16									
6.10	19									
	17									
	13									
	18									
7.32	15									
	23		X	A						
	19		X							
	27		X							
8.54	25									
	20									
	10									
	18									
9.76	20									
	32									
	23									
	3		X	A						
10.98	4		X							
	5		X							
	8									
12.20	14									
	16									
	3									
13.42	5									
	49									
	53		X	A					wet dense to very dense	CLAYEY SAND, GRAVEL & COBBLES, well graded, subrounded to subangular, low to medium plasticity, brown
	37		X							
14.64	36		X		5-85/ 5 127mm					
	42		X							
	63		X							
	54		X							
15.86	50									
	75									
	60		X	A				CW-SC		
17.08	28		X							
	40		X							
	59		X							
	72		X							
18.30	44									
	50									
	54									
	48									
19.52	54		X	A						
	52		X							
	39		X							
	26									
20.74	13									
	33				15-23-38					
	34									
21.96	38									
	13									
	25									
	43		X	A						
23.18	33		X							
	35		X							
	34		X							
	28									
24.40	15									
	14									
	14									
	14									
25.62	13									
	13									
	19		X	A						
26.84	17		X						wet dense	SAND & GRAVEL, some cobbles, poorly graded, nonplastic, brown
	26		X							
	11		X							
	12							GP		
28.06	13									
	14									
	19									
	17									
29.28	38		X	A						
	32		X							
	28		X							
	25									
30.50	32									
	30								wet medium dense to dense	SAND & GRAVEL, some clay & cobbles, poorly graded, subrounded to subangular, nonplastic, brown
	25									
	26									
31.72	23									
	19		X	A						
	15		X							
	14		X							
32.94	12		X							
	18									
	12									
	14							GP-GC		
34.16	11									
	12									
	10									
	9		X	A						
35.38	10		X							
	11		X							
	18		X							
	22									
36.60	10									
	12									
	15									
	12									
37.82	8									
	14		X	A						
	23		X							
	14		X							
39.04	16		X							
40.26										Stopped Drill at 39.3m
41.48										
42.70										Groundwater @ 0.3m
43.92										
45.14										

RECORD DRAWING NOTATIONS

These record drawings reflect certain dimensions, details, specifications, and plan revisions prepared by others or obtained from other record drawings which have not been independently verified by Entranco. As a result, Entranco is not responsible for the accuracy, appropriateness or completeness of such information depicted in these record drawing notations.

ENTRANCO ENGINEERS, INC.
DATE: 8-10-99

NOTE:

The boring logs show subsurface conditions at the dates and locations shown in AEE Job No. E94-171, and it is not warranted that they are representative of subsurface conditions at other locations and times.

The sand gravel and cobble (SGC) deposits contain occasional boulders.

Classification of soil materials is visual unless accompanied by lab testing presented in the Geotechnical Investigation Report, prepared by Agra Earth & Environmental, Inc., Project No. E94-171.

The absence of a ground water indication does not constitute a representation that the ground water will not be present during construction. Ground water is indicated herein only when found during the foundation investigation and represents that condition only on the date of the investigation.

Tube samplers are driven with a 63.5 Kg hammer with 762 mm free falls, no cushion.

SAMPLE TYPE KEY

A - Auger Cuttings

S - 50.8mm O.D. 35mm I.D. tube sampler Blows are recorded every 152.4 mm of penetration

NO.	REVISION	BY	DATE
3			
2			
1			

MARICOPA COUNTY
DEPARTMENT OF TRANSPORTATION
ENGINEERING DIVISION

116TH AVENUE BRIDGE
OVER GILA RIVER

Registered Professional Engineer (Civil) CERTIFICATE NO. 17124 NORMAN HAROLD WETZ Date Signed 8/17/99 ARIZONA, U.S.A.

	BY	DATE
DESIGNED	N.H. WETZ	7/95
DRAWN	T.M. PORTER	7/95
CHECKED	D.E. PETERSON	7/95

AGRA Earth & Environmental

LOG OF TEST BORINGS-2

SHEET OF S6 S29

TRACS NO. SS34501C

mcdotstd.bdr 10/18/94

F.H.W.A. REGION	STATE	PROJECT NO.	SHEET NO.	TOTAL SHEETS	RECORD DRAWING
9	AZ.	STP-MMA-0(18)P	39	68	

RECORD DRAWING

RECORD DRAWING NOTATIONS

These record drawings reflect certain dimensions, details, specifications, and plan revisions prepared by others or obtained from other record drawings which have not been independently verified by Entranco. As a result, Entranco is not responsible for the accuracy, appropriateness or completeness of such information depicted in these record drawing notations.

ENTRANCO ENGINEERS, INC.
DATE: 8-16-99

LOG OF TEST BORING NO. 7

PROJECT 116th Avenue Bridge
JOB NO. E94-171 DATE 11-8-94 Location: Pier #16 Sta. 4+331.2m
RIG TYPE AP-1000
BORING TYPE 9 1/4" Dual-Wall Percussion Hammer
SURFACE ELEV. 263.6m SURVEY Plan & Profile
DATUM

Depth (Meters)	Blows (Per 152.4mm)	Penetration Resistance	Graphical Log	Sample Type	Blow Count	Dry Density (Lb/ft³)	Moisture Content (Percent of Dry Weight)	Unified Soil Classification	REMARKS	VISUAL CLASSIFICATION
0.00	17			A					very moist to wet medium dense to very dense	SAND, GRAVEL & COBBLES, poorly graded, nonplastic, brown
	10									
1.22	10									note: increase in cobbles below 10m
	9									
	14									
2.44	15									
	15									
	16			A				GP		
3.66	13									
	14									
	19									
4.88	11									
	14									
	21									
6.10	26			A						
	28									
	32									
7.32	31									
	23									
	21									
8.54	13									
	8									
	17			A						
9.76	32									
	45									
	36									
10.98	41									
	31									
	36									
12.20	44			A			13			
	43									
	45									
13.42	31								wet dense	CLAYEY SAND, GRAVEL & COBBLES, well graded, rounded to subrounded, low to medium plasticity, brown
	33									
	24									
	27									
14.64	55			4x76-SCT						
	32			1x127mm						
	41			A						
15.86	31									
	52									
	31									
	71									
17.08	50							CW-GC		
	48									
	68									
	53									
18.30	45			A						
	42									
	48									
	48									
19.52	48									
	74									
20.74	16									
	30									
	24			A						
	18									
21.96	15								wet dense to very dense	SAND, GRAVEL & COBBLES, poorly graded, subangular to subrounded, nonplastic, brown
	21									
23.18	34									
	46									
	35									
	31									
24.40	31			A			16	GP		
	35									
	26									
25.62	26									
	16									
	74									
26.84	16									
	23									
	24									
	28									
28.06	39									
	33									
	18									
	27									
	31									
29.28	20								wet dense	GRAVELLY SAND, poorly graded, subangular to subrounded, nonplastic,
	15									
	13									
	15									
30.50	15			A			18			
	18							SP		
	21									
	27									
31.72	29									
	31									
	16									
32.94	11								wet very dense to dense	SAND & GRAVEL, some to considerable cobbles, poorly graded, rounded to subrounded, nonplastic, brown
	11									
	13			A						
	13									
34.16	13									
	14									
	15									
	15							GP		
35.38	16									
	16									
	27									
36.60	45			A						
	55									
	16									
37.82	18									
	16									
	32									
	23									
39.04	19									Stopped Drill at 39.3m
40.26										
41.48										
42.70										Groundwater @ 2.7m
43.92										
45.14										

LOG OF TEST BORING NO. 8

PROJECT 116th Avenue Bridge
JOB NO. E94-171 DATE 5-30-96 Location: Sta. 5+697.4, 2m L
RIG TYPE AP-1000
BORING TYPE 9 3/4" Dual-wall Percussion Hammer
SURFACE ELEV. 262.76m SURVEY Plan & Profile
DATUM

Depth (Meters)	Blows (Per 152.4mm)	Penetration Resistance	Graphical Log	Sample Type	Blow Count	Dry Density (Lb/ft³)	Moisture Content (Percent of Dry Weight)	Unified Soil Classification	REMARKS	VISUAL CLASSIFICATION
0.00	3								moist to wet medium dense to dense	SAND, GRAVEL & COBBLES, trace of silt, subangular to subrounded, poorly graded, nonplastic, light brown
	3									
	4									
1.22	7									
	11									
	14									
2.44	9									
	7									
	4									
3.66	5			A						
	10									
	12									
4.88	12									
	13									
	19							GP		
6.10	19									
	14									
	29									
	29									
7.32	30									
	30									
	32			A						
8.54	30									
	40									
	61									
9.76	42									
	15									
	18									
10.98	40									
	38									
	30									
	42									
12.20	39			A						
	32									
	29									
13.42	45									
	46									
	35									
14.64	29									
	49									
	57									
15.86	39									
	37									
	26									
	37									
17.08	67							GP		
	43									
	46									
	37									
18.30	67			A						
	34									
	34									
19.52	13									
	13			A						
	13							SP-SM	wet medium dense	GRAVELLY SAND, poorly graded, nonplastic, brown
20.74	40									
	29									
	324									
	282			A						
21.96	78									GNEISS, moderately weathered, soft, gray to dark gray
	115									
	246									
23.18	273									
	216									
	182									
24.40										Stopped Drilling at 23.8m
25.62										
26.84										
28.06										
29.28										

LOG OF TEST BORING NO. 9

PROJECT 116th Avenue Bridge
JOB NO. E94-171 DATE 8-30-96 Location: Sta. 3+840.1
RIG TYPE AP-1000
BORING TYPE 9 3/4" Dual-wall Percussion Hammer
SURFACE ELEV. 262.78m SURVEY Plan & Profile
DATUM

Depth (Meters)	Blows (Per 152.4mm)	Penetration Resistance	Graphical Log	Sample Type	Blow Count	Dry Density (Lb/ft³)	Moisture Content (Percent of Dry Weight)	Unified Soil Classification	REMARKS	VISUAL CLASSIFICATION
0.00	2								moist to wet medium dense to dense	SAND, GRAVEL & COBBLES, trace of silt, subrounded to subangular, poorly graded, nonplastic, light brown
	4									
	3									
1.22	7									
	6									
	9									
2.44	12									
	17									
	32									
3.66	44									
	53									
	54									
	47									
4.88	32			A						
	22							GP		
	25									
	36									
6.10	19									
	30									
	24									
	23									
7.32	22									
	28									
	32			A						
	22									
8.54	20									
	20									
	31									
	42									
9.76	47									
	55									
	56									
	54									
10.98	52			A						
	52									
	37									
	37									
12.20	19									
	8									
	7									
13.42	7									
	14									
	19									
14.64	27									
	46									
	46									
15.86	44			A						
	55									SAND, GRAVEL & COBBLES, continued
	55									
	28									note: decrease in cobbles below 21.4m
17.08	24									
	34									note: considerable coarse grained subangular sand from 21.4m to 31.7m
	34									
	55									
18.30	51			A						
	72									
	39									
	44									
19.52	42									
	58			A						
	37							GP		
20.74	35									
	17									
	17									
	33			A						
21.96	32									
	28									
	30									
	24									
23.18	24									
	24									
	19									
	19									
24.40	15			A						
	10									
	12									
25.62	30									
	30									
	31									
	17									
26.84	17									
	14									
	18									
	15			A						
28.06	12									
	11									
	14									
	10									
29.28	10									
	12									
	9									
	8									
	7								wet	SAND, GRAVEL & COBBLES, continued
30.50	11									
	8									note: trace of high plasticity clay nodules up to 0.1m in diameter from 30.8m to 33.1m
	5									
31.72	7									
	5									
	5							GP		
	5									
32.94	5									
	8									
	13									
34.16	11									
	10									
	16									
	42			A						
35.38	42									
	50							SP-SW	medium dense to dense	GRAVELLY SAND, poorly graded, nonplastic, brown
	526									note: Gneiss rock at 36.3m
36.60										Stopped Drilling at 36.3m
37.82										
39.04										
40.26										
41.48										
42.70										
43.92										
45.14										

NOTE:

The boring logs show subsurface conditions at the dates and locations shown in AEE Job No. E94-171, and it is not warranted that they are representative of subsurface conditions at other locations and times.

The sand gravel and cobble (SGC) deposits contain occasional boulders.

Classification of soil materials is visual unless accompanied by lab testing presented in the Geotechnical Investigation Report, prepared by Agra Earth & Environmental, Inc., Project No. E94-171.

The absence of a ground water indication does not constitute a representation that the ground water will not be present during construction. Ground water is indicated herein only when found during the foundation investigation and represents that condition only on the date of the investigation.

Tube samplers are driven with a 63.5 Kg hammer with 762 mm free falls, no cushion.

SAMPLE TYPE KEY

A - Auger Cuttings

S - 50.8mm O.D. 35mm I.D. tube sampler Blows are recorded every 152.4 mm of penetration

NO	REVISION	BY	DATE
3			
2			
1			

MARICOPA COUNTY
DEPARTMENT OF TRANSPORTATION
ENGINEERING DIVISION

116TH AVENUE BRIDGE
OVER GILA RIVER

	BY	DATE
DESIGNED	N.H. WETZ	7/95
DRAWN	T.M. PORTER	7/95
CHECKED	D.E. PETERSON	7/95

Registered Professional Engineer (Civil) CERTIFICATE NO. 12176 NORMAN HAROLD WETZ Date Signed 8-16-99 ARIZONA, U.S.A.

AGRA Earth & Environmental

LOG OF TEST BORINGS-3

SHEET OF S7 S29

TRACS NO. SS34501C

mcdstd.bdr 10/18/94

F.H.W.A. REGION	STATE	PROJECT NO.	SHEET NO.	TOTAL SHEETS	RECORD DRAWING
9	AZ.	STP-MMA-0(18)P	40	68	

RECORD DRAWING

RECORD DRAWING NOTATIONS

These record drawings reflect certain dimensions, details, specifications, and plan revisions prepared by others or obtained from other record drawings which have not been independently verified by Entranco. As a result, Entranco is not responsible for the accuracy, appropriateness or completeness of such information depicted in these record drawing notations.

ENTRANCO ENGINEERS, INC.
DATE: 8-10-99

LOG OF TEST BORING NO. 10

PROJECT 116th Avenue Bridge
JOB NO. E94-171 DATE 3-31-96
Location Sta. 3+774
RIG TYPE AP-1000
BORING TYPE 9 3/4" Dual-wall Percussion Hammer
SURFACE ELEV. 283.056m
DATUM Plan & Profile

Columns: Depth in Meters | Continuous Penetration Resistance | Graphical Log | Sample | Sample Type | Blow Count | Dry Density kg. per Cubic meter | Moisture Content Percent of Dry Weight | Unified Soil Classification | REMARKS | VISUAL CLASSIFICATION

Depth markers (m): 0.00, 1.22, 2.44, 3.66, 4.88, 6.10, 7.32, 8.54, 9.76, 10.98, 12.20, 13.42, 14.64, 15.86, 17.08, 18.30, 19.52, 20.74, 21.96, 23.18, 24.40, 25.62, 26.84, 28.06, 29.28, 30.50, 31.72, 32.94, 34.16, 35.38, 36.60, 37.82, 39.04, 40.26, 41.48, 42.70, 43.92, 45.14

Continuous Penetration Resistance: 3, 4, 3, 4, 9, 9, 10, 19, 27, 31, 33, 37, 24, 29, 35, 26, 37, 42, 32, 37, 47, 48, 47, 69, 50, 49, 53, 54, 60, 72, 59, 88, 55, 45, 50, 47, 48, 30, 63, 64, 58, 68, 63, 58, 60, 79, 129, 88, 55, 55, 63, 60, 47, 59, 14, 38, 50, 27, 39, 45, 69, 50, 39, 32, 53, 60, 18, 20, 42, 34, 27, 29, 18, 10, 10, 13, 10, 8, 9, 12, 13, 11, 10, 9, 10, 11, 12, 9, 10, 9, 8, 8, 9, 9, 7, 8, 9, 10, 9, 11, 10, 14, 13, 12, 11, 1, 22, 12, 9, 9, 10, 9, 10, 12, 11, 8, 8, 4, 5, 8, 8, 12, 11, 10, 17, 19, 2, 26, 25, 30, 28, 22, 19, 18

Sample blow count (S): 9-9-11 (at approx. 33 m)

Depth (m)	Unified Soil Classification	Remarks	Visual Classification
0.00	GP	moist to wet; medium dense to dense	SAND, GRAVEL & COBBLES, some silt & trace of clay, subrounded to subangular, poorly graded, nonplastic, light brown
~7.5	GP–GC	wet; dense to very dense	CLAYEY SAND, GRAVEL & COBBLES, poorly graded, subrounded to subangular, medium plasticity, brown
~22.0	SW	wet; medium dense	SAND & GRAVEL, well graded, subrounded to subangular, nonplastic, brown
~30.6	GP–GC	wet; medium dense	CLAYEY SAND, GRAVEL & COBBLES, poorly graded, subangular, low to medium plasticity, brown
~37.9	CL	wet; firm	SANDY CLAY, some silt, medium plasticity, brown. note: weakly lime cemented below 40m
~40.6			Stopped Drilling at

LOG OF TEST BORING NO. 11

PROJECT 116th Avenue Bridge
JOB NO. E94-171 DATE 6-1-96
Location Sta. 3+813.9
RIG TYPE AP-1000
BORING TYPE 9 3/4" Dual-wall Percussion Hammer
SURFACE ELEV. 283.210m
DATUM Plan & Profile

Continuous Penetration Resistance: 3, 3, 4, 5, 4, 4, 3, 5, 5, 5, 7, 4, 5, 5, 5, 4, 8, 18, 35, 33, 37, 53, 80, 73, 67, 39, 38, 65, 52, 39, 22, 16, 8, 64, 67, 37, 38, 51, 55, 88, 207, 69, 37, 16, 60, 60, 97, 85, 79, 72, 74, 84, 76, 68, 54, 40, 34, 35, 38, 50, 65, 64, 44, 42, 56, 49, 58, 51, 64, 49, 19, 13, 14, 15, 14, 13, 10, 12, 12, 11, 10, 8, 10, 9, 11, 12, 17, 38, 52, 39, 18, 32, 35, 18, 10, 22, 19, 12, 13, 10, 9, 7, 8, 10, 29, 21, 16, 24, 19, 22, 28, 26, 9, 11, 8, 9, 10, 7, 9, 14, 18, 10, 8, 9, 6, 7, 7, 9, 10, 9, 12, 13, 10, 9, 11

Depth (m)	Unified Soil Classification	Remarks	Visual Classification
0.00	GP	very moist to wet; medium dense to dense	SAND, GRAVEL & COBBLES, trace of silt, subrounded, poorly graded, nonplastic, brown. note: increasing cobbles from 11.3m to 12.8m
~21.4	SP	wet; medium dense	GRAVELLY SAND, trace to some cobbles, poorly graded, subrounded to subangular, nonplastic, brown
~30.5	SP	wet	GRAVELLY SAND, trace of cobbles, continued
~34.2	SP–SM		SILTY SAND, trace of clay, some to considerable gravel, nonplastic, light brown
~41.2			Stopped Drilling at 41.2m

LOG OF TEST BORING NO. 12

PROJECT 116th Avenue Bridge
JOB NO. E94-171 6-DATE
Location Sta. 3+858.1
RIG TYPE AP-1000
BORING TYPE 9 3/4" Dual-wall Percussion Hammer
SURFACE ELEV. 283.318m
DATUM Plan & Profile

Continuous Penetration Resistance: 3, 5, 8, 18, 26, 33, 38, 26, 26, 27, 23, 26, 24, 29, 32, 32, 33, 26, 23, 18, 12, 10, 15, 17, 22, 40, 41, 38, 51, 63, 55, 58, 56, 59, 70, 50, 57, 54, 59, 53, 52, 53, 55, 49, 52, 50, 61, 70, 88, 94, 95, 83, 82, 44, 41, 62, 42, 50, 51, 53, 48, 43, 37, 29, 40, 39, 37, 29, 18, 24, 30, 34, 37, 44, 28, 19, 18, 19, 16, 19, 19, 20, 16, 14, 15, 24, 18, 14, 13, 11, 10, 11, 14, 13, 18, 33, 29, 38, 19, 21, 9, 8, 9, 11, 9, 11, 10, 9, 11, 9, 5, 6, 9, 7, 9, 10, 22, 14, 8, 11, 14, 15, 18, 17, 16, 14, 12, 18, 15, 11, 13, 12, 11, 10, 9

Sample blow count (S): 28–50/4" (at approx. 21 m)

Depth (m)	Unified Soil Classification	Remarks	Visual Classification
0.00	GP	very moist to wet; medium dense to dense	SAND, GRAVEL & COBBLES, some silt, subrounded to subangular, poorly graded, nonplastic, light brown
~15.6	GP	wet	SAND, GRAVEL & COBBLES, continued. note: some silty clay nodules at 29.9m
~30.5	SP–SM	wet	SILTY SAND & GRAVEL, trace of cobbles, poorly graded, subrounded to subangular, nonplastic, brown
~35.4	SP		GRAVELLY SAND, trace to some cobbles, poorly graded, subrounded to subangular, nonplastic, brown
~41.2			Stopped Drilling at 41.2

NOTE:

The boring logs show subsurface conditions at the dates and locations shown in AEE Job No. E94–171, and it is not warranted that they are representative of subsurface conditions at other locations and times.

The sand gravel and cobble (SGC) deposits contain occasional boulders.

Classification of soil materials is visual unless accompanied by lab testing presented in the Geotechnical Investigation Report, prepared by Agra Earth & Environmental, Inc., Project No. E94–171.

The absence of a ground water indication does not constitute a representation that the ground water will not be present during construction. Ground water is indicated herein only when found during the foundation investigation and represents that condition only on the date of the investigation.

Tube samplers are driven with a 63.5 Kg hammer with 762 mm free falls, no cushion.

SAMPLE TYPE KEY

A – Auger Cuttings

S – 50.8mm O.D. 35mm I.D. tube sampler
Blows are recorded every 152.4 mm of penetration

NO.	REVISION	BY	DATE
3			
2			
1			

MARICOPA COUNTY
DEPARTMENT OF TRANSPORTATION
ENGINEERING DIVISION

116TH AVENUE BRIDGE
OVER GILA RIVER

Registered Professional Engineer Certificate 12176 NORMAN HAROLD WETZ (Civil), Date Signed 8/7/97, ARIZONA, U.S.A.

	BY	DATE
DESIGNED	N.H. WETZ	7/95
DRAWN	T.M. PORTER	7/95
CHECKED	D.E. PETERSON	7/95

AGRA Earth & Environmental

LOG OF TEST BORINGS–4 | SHEET S8 OF S29

TRACS NO. SS34501C

mcdotstd.bdr 10/18/94

F.H.W.A. REGION	STATE	PROJECT NO.	SHEET NO.	TOTAL SHEETS	RECORD DRAWING
9	AZ.	STP-MMA-0(18)P	41	68	

RECORD DRAWING

RECORD DRAWING NOTATIONS

These record drawings reflect certain dimensions, details, specifications, and plan revisions prepared by others or obtained from other record drawings which have not been independently verified by Entranco. As a result, Entranco is not responsible for the accuracy, appropriateness or completeness of such information depicted in these record drawing notations.

ENTRANCO ENGINEERS, INC.
DATE: 8-10-99

LOG OF TEST BORING NO. 13

PROJECT 116th Avenue Bridge
JOB NO. E94-171 DATE 6-2-95
Location: Sta. 3+903.1
RIG TYPE AP-1000
BORING TYPE 9 3/4" Dual-wall Percussion Hammer
SURFACE ELEV. 286.7m
DATUM Plan & Profile

Columns: Depth in Meters | Continuous Penetration Resistance | Graphical Log | Sample | Sample Type | Blow Count | Dry Density Kg. per Cubic meter | Moisture Content Percent of Dry Weight | Unified Soil Classification | REMARKS | VISUAL CLASSIFICATION

Depth in Meters	Continuous Penetration Resistance	Sample Type	Unified Soil Classification
0.00	4, 9, 12, 8		
1.22	9, 13, 17, 20		
2.44	27, 23, 18, 12		GP
3.66	11, 11, 13, 19	A	
4.88	27, 30, 29, 18		
6.10	24, 23, 23, 24		
7.32	25, 27, 33, 49		
8.54	71, 80, 84, 70		
9.76	47, 50, 41, 31	A	
10.98	40, 39, 43, 50		
12.20	54, 48, 49, 41		
13.42	52, 19, 11, 18	A	
14.64	20, 19, 14, 18		
15.86	24, 30, 48, 69		
17.08	74, 86, 69, 49		
18.30	60, 45, 39, 43	A	GP
19.52	59, 52, 48, 51		
20.74	53, 39, 48, 31		
21.96	30, 29, 30, 30		
23.18	31, 39, 38, 30		
24.40	31, 24, 38, 35	A	
25.62	22, 17, 12, 19		SP
26.84	18, 17, 13, 14		
28.06	24, 30, 16, 28	A	
29.28	36, 36, 14, 17		
30.50	14, 11, 14, 11		
31.72	9, 10, 24, 22		SP
32.94	14, 11, 19, 17		
34.16	14, 19, 29, 27	A	
35.38	22, 12, 11, 10		
36.60	7, 8, 10, 9		
37.82	11, 8, 9, 10	A	SP
39.04	11, 10, 12, 9		
40.26	8, 10, 9		
41.48			
42.70			
43.92			
45.14			

REMARKS	VISUAL CLASSIFICATION
slightly moist to wet; medium dense to dense; wet	SAND, GRAVEL & COBBLES, some silt, subangular to subrounded, poorly graded, nonplastic, light brown. note: Increase in cobbles from 8.5m to 10m. note: occasional clay nodules
wet; medium dense to dense	GRAVELLY SAND, trace to some cobbles, poorly graded, subrounded to subangular, nonplastic, brown
wet; medium dense	SAND, some gravel, trace of clay, subangular to subrounded, poorly graded, nonplastic, light brown
	Stopped Drilling at 41.2m

LOG OF TEST BORING NO. 14

PROJECT 116th Avenue Bridge
JOB NO. E94-171 DATE 6-2-95
Location Sta. 3+943.5
RIG TYPE AP-1000
BORING TYPE 9 3/4" Dual-wall Percussion Hammer
SURFACE ELEV. 282.840m
DATUM Plan & Profile

Depth in Meters	Continuous Penetration Resistance	Sample Type	Unified Soil Classification
0.00	4, 5, 5, 10	A	
1.22	11, 14, 14, 8		
2.44	9, 14, 15, 19		GP
3.66	20, 24, 26, 27		
4.88	32, 38, 29, 27		
6.10	28, 28, 33, 33		
7.32	34, 38, 40, 54	A	
8.54	53, 19, 24, 27		
9.76	28, 32, 19, 32	A	
10.98	42, 50, 48, 30		
12.20	19, 43, 52, 60		
13.42	70, 48, 73, 66		
14.64	70, 70, 55, 60		
15.86	63, 53, 53, 39	A	GP
17.08	37, 39, 54, 66		
18.30	91, 74, 47, 29		
19.52	38, 26, 13, 23		
20.74	24, 18, 14, 16		SP
21.96	18, 19, 24, 37		
23.18	27, 41, 13, 17		
24.40	18, 23, 20, 20	A	
25.62	31, 17, 18, 16		GP
26.84	17, 28, 19, 14	S 2-3-6	
28.06	11, 10, 12, 14		
29.28	14, 15, 12, 14		
30.50	12, 11, 13, 10		
31.72	10, 13, 17, 20		SP
32.94	19, 20, 24, 15	A	
34.16	18, 17, 18, 17		
35.38	19, 17, 15, 16		SP
36.60	15, 16, 18, 15		
37.82	14, 14, 17, 14		
39.04	13, 17, 11, 10	A	
40.26	9, 8, 9		GP
41.48			
42.70			
43.92			
45.14			

REMARKS	VISUAL CLASSIFICATION
slightly moist to wet; medium dense to very dense	SAND, GRAVEL & COBBLES, some silt, subangular to subrounded, poorly graded, nonplastic, light brown
wet; medium dense	GRAVELLY SAND, trace of cobbles, poorly graded, subrounded to subangular, nonplastic, brown
wet; medium dense to dense	SAND & GRAVEL, some to considerable cobbles, poorly graded, subrounded to subangular, nonplastic, brown. note: some clay nodules from 23.77m to 26.52m
wet; medium dense to dense	GRAVELLY SAND, trace to some cobbles, poorly graded, subrounded to subangular, nonplastic, brown
wet; medium dense to dense	SAND, some to considerable gravel, trace of cobbles, predominantly fine to medium grained sand, subrounded, nonplastic, light brown
wet; medium dense	SAND, GRAVEL & COBBLES, trace of silt, predominantly medium to coarse grained sand, subrounded gravel & cobbles, nonplastic, light brown
	Stopped Drilling at 41.2

LOG OF TEST BORING NO. 15

PROJECT 116th Avenue Bridge
JOB NO. E94-171 DATE 6-2-95
Location Sta. 3+986.7, 2m R
RIG TYPE AP-1000
BORING TYPE 9 3/4" Dual-wall Percussion Hammer
SURFACE ELEV. 283.488m
DATUM Plan & Profile

Depth in Meters	Continuous Penetration Resistance	Sample Type	Unified Soil Classification
0.00	3, 5, 8, 8	A	SP/GP
1.22	7, 8, 7, 6		
2.44	9, 17, 20, 42		
3.66	33, 40, 38, 27		
4.88	29, 33, 39, 39		
6.10	41, 44, 47, 48		GP
7.32	50, 47, 50, 69		
8.54	71, 60, 88, 97	A	
9.76	93, 55, 64, 48		
10.98	49, 37, 33, 33		
12.20	35, 27, 25, 39		
13.42	49, 54, 64, 60		
14.64	59, 50, 53, 46		
15.86	57, 60, 49, 39	A	GP
17.08	40, 45, 43, 40		
18.30	44, 24, 12, 13		
19.52	20, 16, 18, 14		SP
20.74	40, 44, 34, 14	A	
21.96	33, 22, 19, 18		
23.18	14, 17, 11, 10		
24.40	8, 9, 10, 9		GP
25.62	11, 12, 14, 17		
26.84	20, 18, 11, 12	A	
28.06	19, 15, 14, 11		
29.28	14, 10, 12, 11		
30.50	10, 9, 7, 6		
31.72	9, 11, 29, 40		GP
32.94	51, 52, 48, 37		
34.16	10, 13, 15, 11		
35.38	10, 13, 12, 13		
36.60	19, 17, 12, 10	A	SW
37.82	9, 10, 11, 13		
39.04	11, 9, 10, 9	A	
40.26	9, 9, 8		
41.48			
42.70			
43.92			
45.14			

REMARKS	VISUAL CLASSIFICATION
slightly moist to wet; medium dense	SAND & GRAVEL, trace of cobbles & silt, subrounded, poorly graded, nonplastic, light brown
wet; dense to very dense	SAND, GRAVEL & COBBLES, poorly graded, nonplastic, brown
wet; medium dense	GRAVELLY SAND, trace of cobbles, subrounded to subangular, poorly graded, nonplastic, brown
wet; medium dense to dense	SAND & GRAVEL, some to considerable cobbles, poorly graded, subrounded to subangular, nonplastic, brown
wet; medium dense to dense	SAND & GRAVEL, trace of cobbles, well graded, subrounded to subangular, nonplastic, brown. note: occasional clay nodules from 36.6m to 41.2m
	Stopped Drilling at 41.2m

NOTE:

The boring logs show subsurface conditions at the dates and locations shown in AEE Job No. E94-171, and it is not warranted that they are representative of subsurface conditions at other locations and times.

The sand gravel and cobble (SGC) deposits contain occasional boulders.

Classification of soil materials is visual unless accompanied by lab testing presented in the Geotechnical Investigation Report, prepared by Agra Earth & Environmental, Inc., Project No. E94-171.

The absence of a ground water indication does not constitute a representation that the ground water will not be present during construction. Ground water is indicated herein only when found during the foundation investigation and represents that condition only on the date of the investigation.

Tube samplers are driven with a 63.5 Kg hammer with 762 mm free falls, no cushion.

SAMPLE TYPE KEY

A – Auger Cuttings

S – 50.8mm O.D. 35mm I.D. tube sampler
Blows are recorded every 152.4 mm of penetration

NO.	REVISION	BY	DATE
3			
2			
1			

MARICOPA COUNTY
DEPARTMENT OF TRANSPORTATION
ENGINEERING DIVISION

116TH AVENUE BRIDGE
OVER GILA RIVER

	BY	DATE
DESIGNED	N.H. WETZ	7/95
DRAWN	T.M. PORTER	7/95
CHECKED	D.E. PETERSON	7/95

Registered Professional Engineer (Civil), Certificate No. 12176, NORMAN HAROLD WETZ, Date Signed 8/7/97, ARIZONA, U.S.A.

AGRA Earth & Environmental

LOG OF TEST BORINGS-5 — SHEET S9 OF S29

TRACS NO. SS34501C

mcdotstd.bdr 10/18/94

F.H.W.A. REGION	STATE	PROJECT NO.	SHEET NO.	TOTAL SHEETS	RECORD DRAWING
9	AZ.	STP-MMA-0(18)P	42	68	

RECORD DRAWING

RECORD DRAWING NOTATIONS

These record drawings reflect certain dimensions, details, specifications, and plan revisions prepared by others or obtained from other record drawings which have not been independently verified by Entranco. As a result, Entranco is not responsible for the accuracy, appropriateness or completeness of such information depicted in these record drawing notations.

ENTRANCO ENGINEERS, INC.
DATE: 8-10-99

LOG OF TEST BORING NO. 16

PROJECT 116th Avenue Bridge
JOB NO. E94-171 DATE 6-3-95 Location Sta. 4+028.9, 3m L
RIG TYPE AP-1000
BORING TYPE 9 3/4" Dual-wall Percussion Hammer
SURFACE ELEV. 283.620m
DATUM Plan & Profile

Columns: Depth in Meters | Continuous Penetration Resistance | Graphical Log | Sample | Sample Type | Blow Count | Dry Density kg. per Cubic meter | Moisture Content Percent of Dry Weight | Unified Soil Classification | REMARKS | VISUAL CLASSIFICATION

Depth (m)	Remarks	Visual Classification
0.00–2.44	slightly moist to very moist; loose to medium dense	SAND, some silt, poorly graded, subangular, weakly cemented, nonplastic, light brown
2.44–41.2	wet; medium dense to very dense	SAND, GRAVEL & COBBLES, trace of silt, subangular to subrounded, nonplastic, light brown to brown. note: increase in cobbles from 6.1m to 7.01m. note: gravel well graded from 11.9m to 13.7m
(~15.5)	wet; very dense to medium dense	
(~31.7)		note: occasional clay nodules below 35m
41.2		Stopped Drilling at 41.2m

Unified Soil Classification: SP (near 0.3m), GP (near 6.4m), GP (near 18.3m), GP (near 33.5m). Sample Type A at 0.00, ~7.6, 12.20, ~19.8, 24.40, 29.28, 36.60 m. Water level symbol near 1.5m.

Depth (m)	Continuous Penetration Resistance
0.00	2, 3, 5, 8
1.22	10, 12, 13, 15
2.44	16, 15, 14, 15
3.66	29, 25, 20, 14
4.88	15, 14, 19, 34
6.10	63, 81, 50, 41
7.32	45, 28, 30, 39
8.54	38, 39, 38, 37
9.76	34, 38, 49, 53
10.98	55, 29, 19, 10
12.20	6, 3, 4, 9
13.42	12, 30, 84, 74
14.64	77, 67, 50, 53
15.86	29, 27, 30, 39
17.08	42, 49, 36, 32
18.30	31, 39, 35, 34
19.52	34, 32, 14, 12
20.74	42, 29, 31, 24
21.96	22, 39, 53, 39
23.18	27, 18, 13, 13
24.40	17, 22, 29, 31
25.62	12, 14, 14, 13
26.84	12, 11, 8, 13
28.06	10, 15, 13, 14
29.28	17, 15, 13, 10
30.50	11, 12, 19, 60
31.72	74, 60, 29, 17
32.94	17, 18, 17, 14
34.16	15, 17, 12, 12
35.38	11, 10, 9, 10
36.60	13, 14, 17, 18
37.82	15, 15, 13, 14
39.04	17, 18, 13, 14
40.26	17, 14, 13
41.48	
42.70	
43.92	
45.14	

LOG OF TEST BORING NO. 17

PROJECT 116th Avenue Bridge
JOB NO. E94-171 DATE 6-3-95 Location Sta. 4+072.1, 1m R
RIG TYPE AP-1000
BORING TYPE 9 3/4" Dual-wall Percussion Hammer
SURFACE ELEV. 283.720m
DATUM Plan & Profile

Depth (m)	Remarks	Visual Classification
0.00–2.7	slightly moist to wet; loose to medium dense	SAND, some silt & gravel, predominantly medium grained, nonplastic, light brown
2.7–23.2	wet; medium dense to very dense	CLAYEY SAND & GRAVEL, some to considerable cobbles, trace of silt, subangular to subrounded, poorly graded, nonplastic, light brown. note: increase in cobbles from 19.8m to 20.7m
23.2–24.4		SANDY CLAY, high plasticity, brown
24.4–30.5	medium dense to dense	SAND & GRAVEL, trace of clay, trace to some cobbles, poorly graded, subrounded to subangular, nonplastic, brown
30.5–41.2	wet; medium dense to dense	GRAVELLY SAND, some cobbles, well graded, subrounded to subangular, nonplastic, brown
41.2		Stopped Drilling at 41.2m

Unified Soil Classification: SP (near 1.3m), GP-GC (near 7.9m), GP-GC (near 18.3m), CH (near 23.5m), SP/GP (near 27m), SW (near 33.8m). Sample Type A at 0.00, ~3.0, 12.20, ~19.8, 23.18, ~33.8, ~37.8 m; S 4-14-24 near 24.1m. Water level symbol near 0.6m.

Depth (m)	Continuous Penetration Resistance
0.00	2, 2, 3, 6
1.22	8, 10, 13, 12
2.44	12, 14, 12, 13
3.66	9, 6, 5, 4
4.88	4, 6, 8, 9
6.10	6, 7, 8, 14
7.32	14, 17, 26, 24
8.54	14, 19, 22, 15
9.76	7, 9, 12, 10
10.98	21, 19, 39, 51
12.20	48, 57, 60, 60
13.42	59, 59, 55, 80
14.64	54, 62, 29, 46
15.86	44, 53, 64, 41
17.08	31, 49, 49, 35
18.30	54, 64, 39, 18
19.52	32, 87, 49, 82
20.74	19, 17, 39, 34
21.96	49, 35, 48, 27
23.18	10, 11, 9, 9
24.40	17, 13, 13, 12
25.62	14, 14, 16, 16
26.84	8, 14, 27, 15
28.06	15, 11, 10, 19
29.28	18, 11, 12, 11
30.50	9, 10, 9, 12
31.72	14, 9, 11, 10
32.94	9, 9, 10, 9
34.16	11, 13, 11, 10
35.38	12, 11, 12, 12
36.60	13, 14, 12, 11
37.82	10, 13, 12, 11
39.04	12, 10, 9, 11
40.26	9, 9, 10
41.48	
42.70	
43.92	
45.14	

LOG OF TEST BORING NO. 18

PROJECT 116th Avenue Bridge
JOB NO. E94-171 DATE 6-4-95 Location Sta. 4+111.0, 4m R
RIG TYPE AP-1000
BORING TYPE 9 3/4" Dual-wall Percussion Hammer
SURFACE ELEV. 284.448m
DATUM Plan & Profile

Depth (m)	Remarks	Visual Classification
0.00–3.5	slightly moist to wet; loose to medium dense	SILTY SAND, trace of gravel, predominantly fine grained, nonplastic, light brown
3.5–24.4	wet; medium dense to very dense	SAND, GRAVEL & COBBLES, trace of silt, subangular to subrounded, nonplastic, light brown. note: increase in cobbles from 11.3m to 13.7m. note: trace of clay below 13.1m
24.4–41.2	wet; medium dense to dense	SAND & GRAVEL, some to considerable cobbles, poorly graded, nonplastic, brown. note: occasional clay nodules from 30.5m to 41.2m
41.2		Stopped Drilling at 41.2m

Unified Soil Classification: SP (near 1.2m), GP (near 7.6m), GP (near 18.3m), GP (near 26.8m), GP (near 33.8m). Sample Type A at 0.00, ~4.6, 10.98, ~15.3, ~23.2, 30.50, ~38.1 m. Water level symbol at 1.22m.

Depth (m)	Continuous Penetration Resistance
0.00	2, 2, 3, 2
1.22	4, 3, 4, 3
2.44	4, 4, 5, 9
3.66	22, 25, 8, 9
4.88	5, 6, 7, 7
6.10	8, 9, 10, 13
7.32	9, 9, 10, 11
8.54	10, 14, 16, 25
9.76	27, 27, 24, 25
10.98	25, 49, 38, 35
12.20	78, 117, 74, 70
13.42	72, 66, 64, 50
14.64	48, 54, 79, 73
15.86	74, 74, 73, 83
17.08	94, 89, 29, 35
18.30	49, 60, 54, 37
19.52	14, 18, 17, 50
20.74	54, 52, 67, 48
21.96	68, 60, 52, 48
23.18	56, 50, 48, 30
24.40	27, 30, 24, 27
25.62	25, 28, 24, 20
26.84	23, 19, 20, 19
28.06	18, 21, 22, 24
29.28	18, 40, 33, 18
30.50	10, 12, 11, 14
31.72	12, 10, 13, 17
32.94	20, 13, 12, 14
34.16	11, 12, 11, 13
35.38	15, 12, 10, 9
36.60	10, 10, 8, 7
37.82	12, 13, 10, 10
39.04	11, 13, 15, 12
40.26	17, 18, 15
41.48	
42.70	
43.92	
45.14	

NOTE:

The boring logs show subsurface conditions at the dates and locations shown in AEE Job No. E94–171, and it is not warranted that they are representative of subsurface conditions at other locations and times.

The sand gravel and cobble (SGC) deposits contain occasional boulders.

Classification of soil materials is visual unless accompanied by lab testing presented in the Geotechnical Investigation Report, prepared by Agra Earth & Environmental, Inc., Project No. E94–171.

The absence of a ground water indication does not constitute a representation that the ground water will not be present during construction. Ground water is indicated herein only when found during the foundation investigation and represents that condition only on the date of the investigation.

Tube samplers are driven with a 63.5 Kg hammer with 762 mm free falls, no cushion.

SAMPLE TYPE KEY

A – Auger Cuttings

S – 50.8mm O.D. 35mm I.D. tube sampler
Blows are recorded every 152.4 mm of penetration

NO.	REVISION	BY	DATE
3			
2			
1			

MARICOPA COUNTY
DEPARTMENT OF TRANSPORTATION
ENGINEERING DIVISION

116TH AVENUE BRIDGE
OVER GILA RIVER

Registered Professional Engineer, Certificate No. 13176, NORMAN HAROLD WETZ, Date Signed 8/11/95, ARIZONA, U.S.A.

	BY	DATE
DESIGNED	N.H. WETZ	7/95
DRAWN	T.M. PORTER	7/95
CHECKED	D.E. PETERSON	7/95

AGRA Earth & Environmental

LOG OF TEST BORINGS–6 — SHEET S10 OF S29

TRACS NO. SS34501C

mcdotstd.bdr 10/18/94

F.H.W.A. REGION	STATE	PROJECT NO.	SHEET NO.	TOTAL SHEETS	RECORD DRAWING
9	AZ.	STP-MMA-0(18)P	43	68	

RECORD DRAWING

RECORD DRAWING NOTATIONS

These record drawings reflect certain dimensions, details, specifications, and plan revisions prepared by others or obtained from other record drawings which have not been independently verified by Entranco. As a result, Entranco is not responsible for the accuracy, appropriateness or completeness of such information depicted in these record drawing notations.

ENTRANCO ENGINEERS, INC.
DATE: 8-10-99

LOG OF TEST BORING NO. 19

PROJECT 116th Avenue Bridge

JOB NO. E94-171 DATE 8-4-95 LOCATION Sta. 4+168.5

RIG TYPE AP-1000
BORING TYPE 6 3/4" Dual-wall Percussion Hammer
SURFACE ELEV. 264.2'
DATUM Plan & Profile

Depth Scale Meters	Cumulative Penetration Resistance	Graphical Log	Sample Type	Sample Blow Count	Dry Density Dry Unit Wt.	Moisture Content Percent Dry Weight	USCS Symbol	REMARKS	VISUAL CLASSIFICATION
0.00	2		A					slightly moist to wet	GRAVELLY SAND, some silt, poorly graded, subangular to subrounded, nonplastic, light brown to brown
	2								
	3						SP		
1.22	6							loose to medium dense	
	5								
	9								
	11								
2.44	18							wet	SAND & GRAVEL, some to trace of cobbles, some silt, poorly graded, nonplastic, brown
	14								
	12								
	13							medium dense to dense	
3.66	15								
	18						SP/		
	23						GP		
	28								
4.88	17								
	13								
	10								
	9								
6.10	10								
	14								
	19								
	18								
7.32	19								
	20								
	23		A						
	12							wet	SAND, GRAVEL & COBBLES, some silt, subangular to subrounded, poorly graded, nonplastic, light brown to brown
8.54	10								
	12								
	21							dense to very dense	
	19								
9.76	12								
	11								
	10								
	20								
10.98	24		A						
	23						GP		
	37								
	39								
12.20	33								
	34								
	29								
	54								
13.42	50								
	62								
	98		A						
	59								
14.64	48								
	39								
	42								
	22								
15.86	32								
	37								
	36								
	59								note: occasional clay nodules from 27.4m to 32.3m
17.08	47								
	27								
	34								
	38								
18.30	44								
	50						GP		
	49								
	48								
19.52	47								
	52								
	62								
	55								
20.74	39								
	36								
	19								
	29		A						
21.96	57								
	68								
	50								
	20								
23.18	20								
	27								
	24								
	35								
24.40	37								
	36								
	40								
	38								
25.62	33								
	19								
	11								
	10								
26.84	18								
	26								
	20								
	22								
28.06	21								
	25								
	34								
	28								
29.28	30								
	44								
	53								
	40								
30.50	42								
	37							wet	SAND, GRAVEL & COBBLES, continued
	40								
	29							very dense to dense	note: occasional clay nodules below 32.3m
31.72	20								
	23								
	20								
	17						GP		
32.94	23								
	24								
	19								
	14								
34.16	17								
	15								
	16								
	16								
35.38	14								
	17								
	15								
	16								
36.60	14		A						
	10							wet	GRAVELLY SAND, trace to some cobbles, well graded, subrounded to subangular, nonplastic, light brown
	9								
	6							medium dense to dense	
37.82	7								
	10								
	20						SW		
	25								
39.04	44								
	45								
	25								
	14								
40.26	18								
	15								
	14								
	10								
41.48									Stopped Drilling at 41.2m
42.70									
43.92									
45.14									

NOTE:

The boring logs show subsurface conditions at the dates and locations shown in AEE Job No. E94-171, and it is not warranted that they are representative of subsurface conditions at other locations and times.

The sand gravel and cobble (SGC) deposits contain occasional boulders.

Classification of soil materials is visual unless accompanied by lab testing presented in the Geotechnical Investigation Report, prepared by Agra Earth & Environmental, Inc., Project No. E94-171.

The absence of a ground water indication does not constitute a representation that the ground water will not be present during construction. Ground water is indicated herein only when found during the foundation investigation and represents that condition only on the date of the investigation.

Tube samplers are driven with a 63.5 Kg hammer with 762 mm free falls, no cushion.

SAMPLE TYPE KEY

A – Auger Cuttings

S – 50.8mm O.D. 35mm I.D. tube sampler
Blows are recorded every 152.4 mm of penetration

NO.	REVISION	BY	DATE
3			
2			
1			

MARICOPA COUNTY
DEPARTMENT OF TRANSPORTATION
ENGINEERING DIVISION

116TH AVENUE BRIDGE
OVER GILA RIVER

Registered Professional Engineer (Civil) CERTIFICATE NO. 12176 NORMAN HAROLD WETZ Date Signed 8/17/99 ARIZONA, U.S.A.

	BY	DATE
DESIGNED	N.H. WETZ	7/95
DRAWN	T.M. PORTER	7/95
CHECKED	D.E. PETERSON	7/95

AGRA Earth & Environmental

LOG OF TEST BORINGS-7

SHEET OF S11 S29

TRACS NO. SS34501C

mcdotstd.bdr 10/18/94

F.H.W.A. REGION	STATE	PROJECT NO.	SHEET NO.	TOTAL SHEETS	RECORD DRAWING
9	AZ.	STP-MMA-0(18)P	44	68	

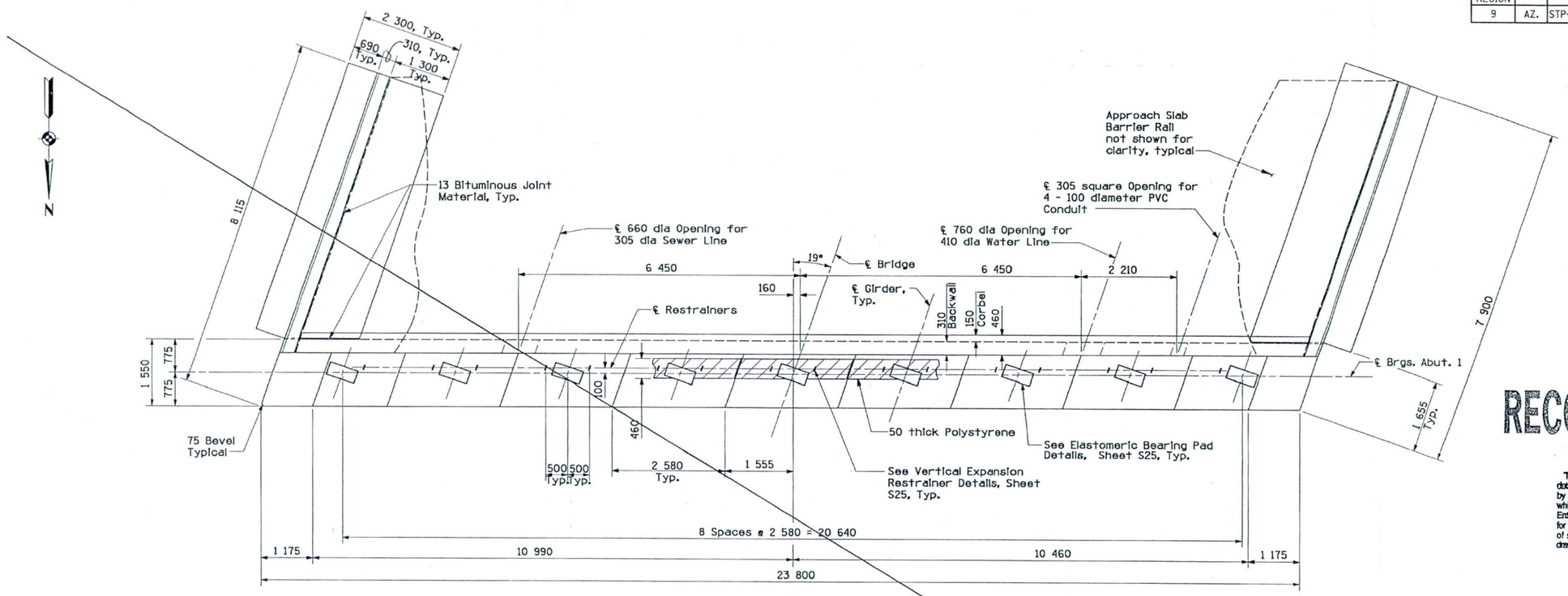

PLAN
Scale 1:50

RECORD DRAWING

RECORD DRAWING NOTATIONS

These record drawings reflect certain dimensions, details, specifications, and plan revisions prepared by others or obtained from other record drawings which have not been independently verified by Entranco. As a result, Entranco is not responsible for the accuracy, appropriateness or completeness of such information depicted in these record drawing notations.

ENTRANCO ENGINEERS, INC.
DATE: 8-10-99

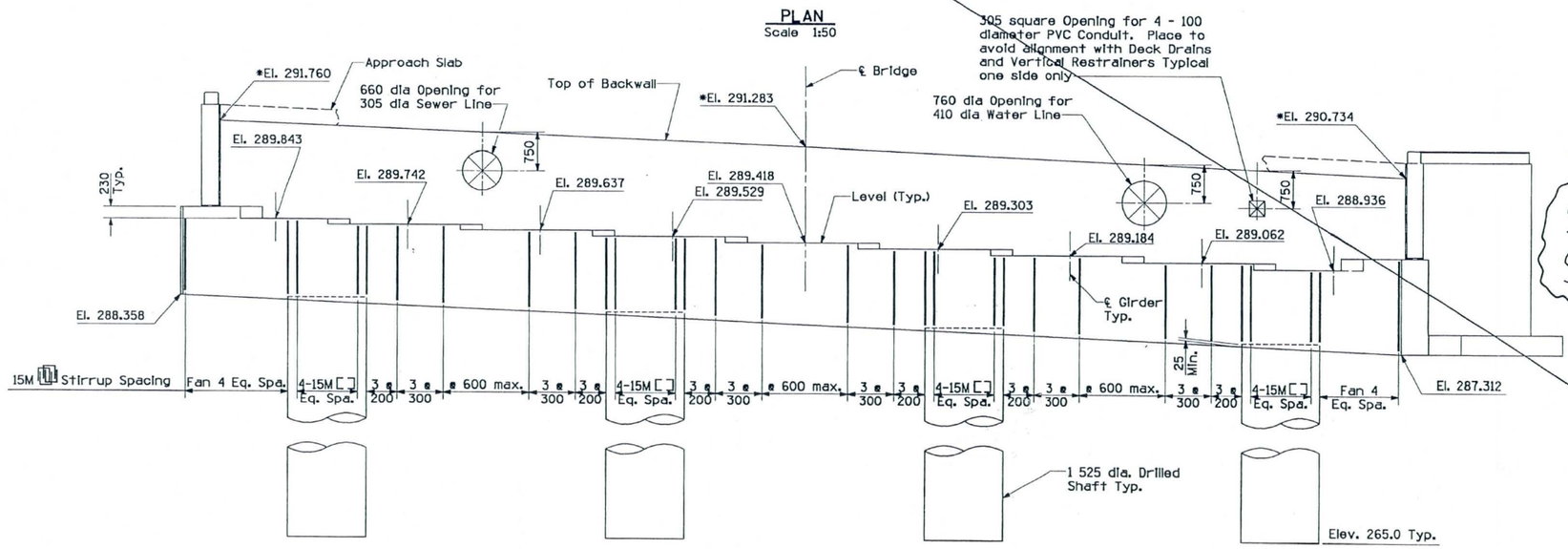

ELEVATION
Scale 1:50

* Elevations shown are at the front face of the backwall.

SEE SHEET S12A

NO.	REVISION	BY	DATE
1			
2			
3			

MARICOPA COUNTY
DEPARTMENT OF TRANSPORTATION
ENGINEERING DIVISION

116TH AVENUE BRIDGE
OVER GILA RIVER

	BY	DATE
DESIGNED	R. PRICE	2/95
DRAWN	J. GILMORE	2/95
CHECKED	V. WISMER	6/95

Registered Professional Engineer (Civil) No. 8423 DONALD R. DAVIS Date Signed 8/10/99 ARIZONA, U.S.A.

HOFFMAN-MILLER ENGINEERS, INC.
PHOENIX ARIZONA

ABUTMENT 1

SHEET OF S12 S29

TRACS NO. SS34501C

$FILE$
$DATE$
$TIME$
MB.DGN 12/02/94

F.H.W.A. REGION	STATE	PROJECT NO.	SHEET NO.	TOTAL SHEETS	RECORD DRAWING
9	AZ.	STP-MMA-0(18)P	44A		

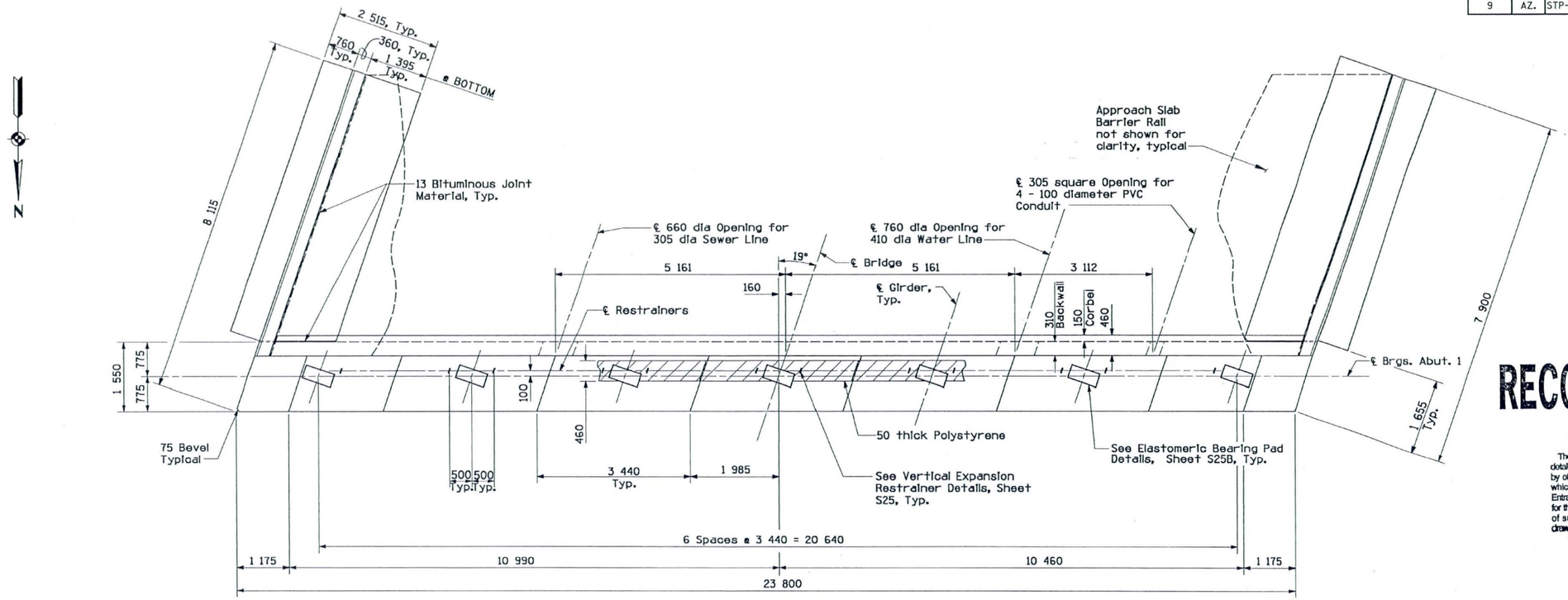

PLAN
Scale 1:50

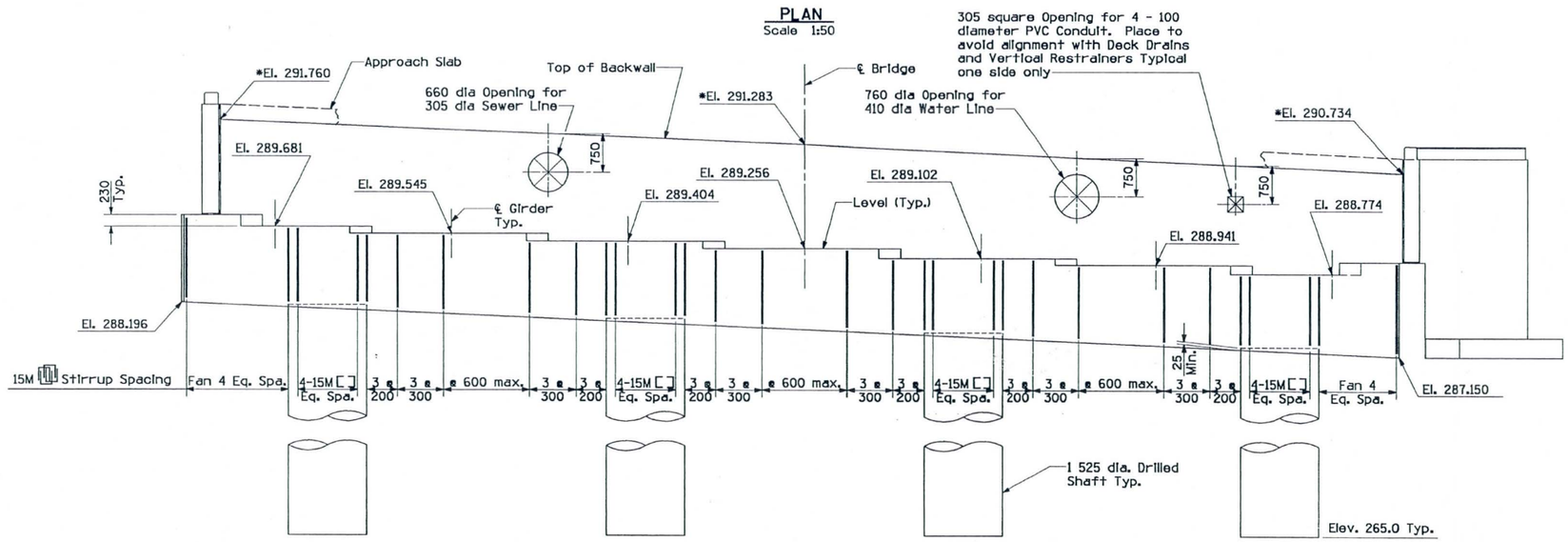

ELEVATION
Scale 1:50

* Elevations shown are at the front face of the backwall.

RECORD DRAWING

RECORD DRAWING NOTATIONS

These record drawings reflect certain dimensions, details, specifications, and plan revisions prepared by others or obtained from other record drawings which have not been independently verified by Entranco. As a result, Entranco is not responsible for the accuracy, appropriateness or completeness of such information depicted in these record drawing notations.

ENTRANCO ENGINEERS, INC.
DATE: 8-10-99

TO ACCOMPANY CICOP #1

This Sheet to Replace Sheet S12.

NO.	REVISION	BY	DATE
1	Revised per Value Engineering	JG	12/97
2			
3			
4			

MARICOPA COUNTY
DEPARTMENT OF TRANSPORTATION
ENGINEERING DIVISION

116TH AVENUE BRIDGE
OVER GILA RIVER

	BY	DATE
DESIGNED	R. PRICE	2/95
DRAWN	J. GILMORE	2/95
CHECKED	V. WISMER	6/95

HOFFMAN-MILLER ENGINEERS, INC.
PHOENIX ARIZONA

Professional Engineer (Civil) DONALD R. DAVIS 8423 Date Signed 8-10-99 ARIZONA, U.S.A.

ABUTMENT 1

SHEET OF S12A

TRACS NO. SS3450IC

$FILE$
$DATE$
$TIME$
MB.DGN 12/02/94

F.H.W.A. REGION	STATE	PROJECT NO.	SHEET NO.	TOTAL SHEETS	RECORD DRAWING
9	AZ.	STP-MMA-0(18)P	45A		

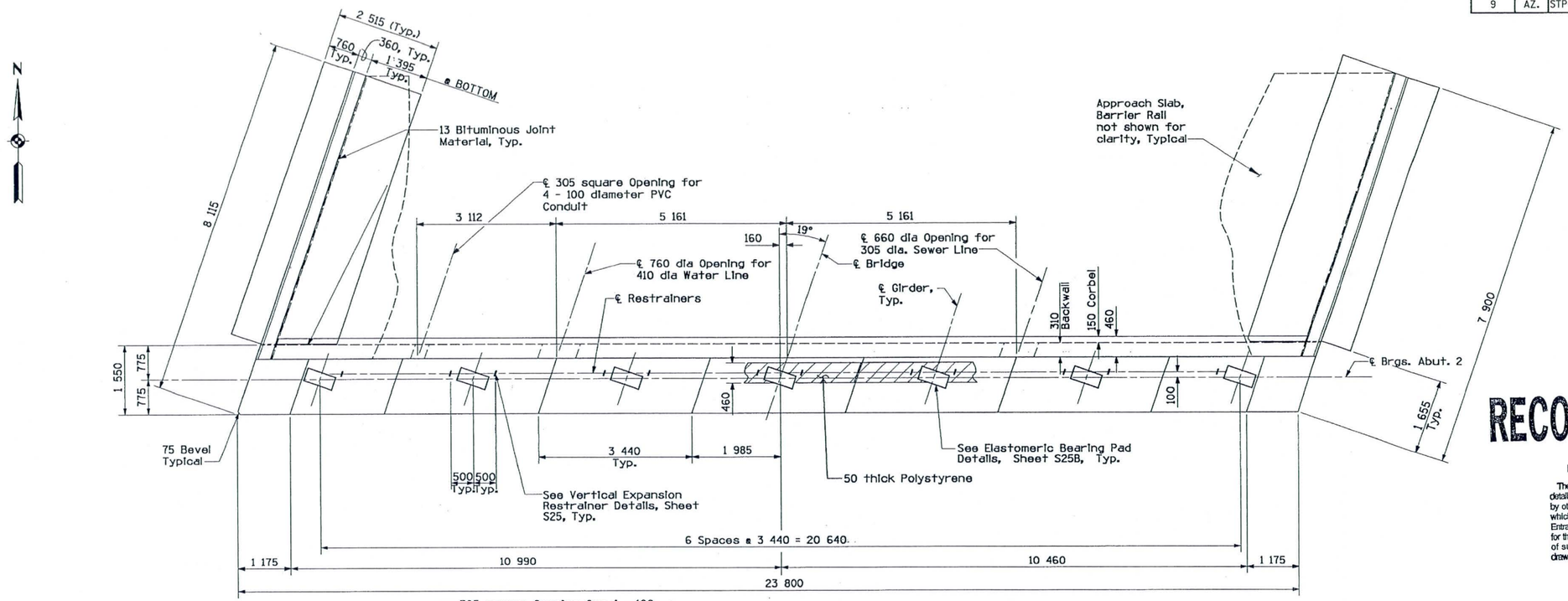

PLAN
Scale 1:50

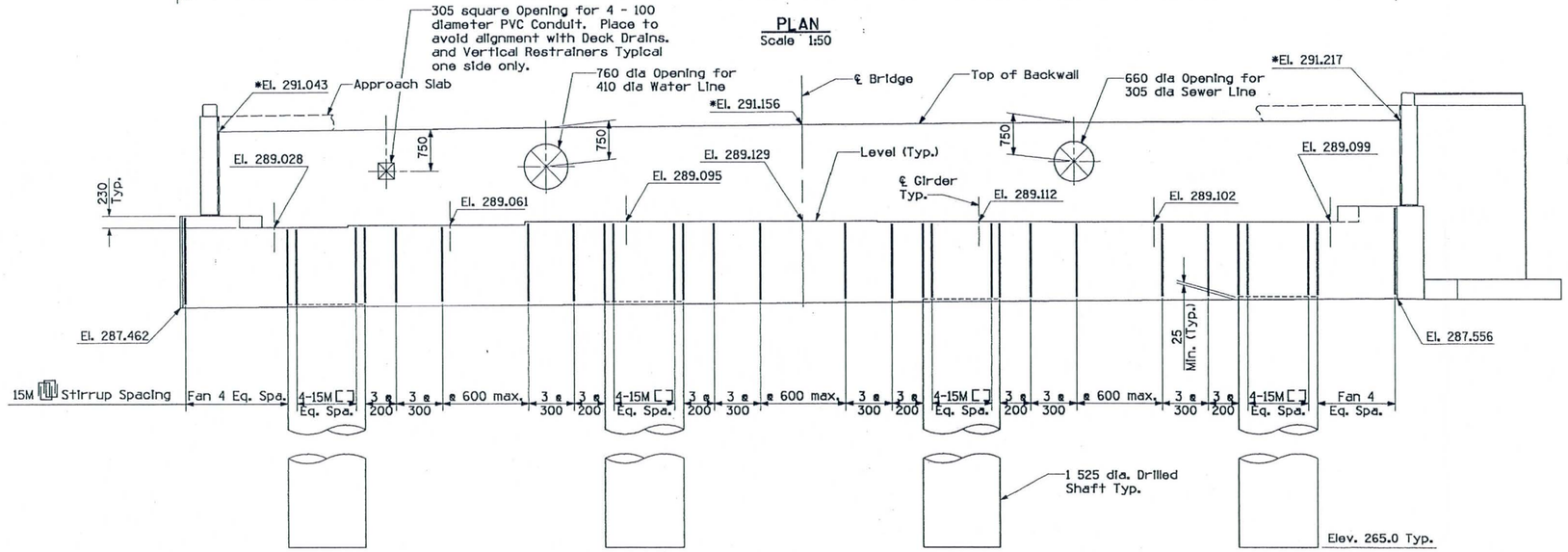

ELEVATION
Scale 1:50

* Elevations shown are at the front face of the backwall.

RECORD DRAWING

RECORD DRAWING NOTATIONS

These record drawings reflect certain dimensions, details, specifications, and plan revisions prepared by others or obtained from other record drawings which have not been independently verified by Entranco. As a result, Entranco is not responsible for the accuracy, appropriateness or completeness of such information depicted in these record drawing notations.

ENTRANCO ENGINEERS, INC.
DATE: 8-10-99

TO ACCOMPANY CICOP #1

This Sheet to Replace Sheet S13.

NO.	REVISION	BY	DATE
1	Revised per Value Engineering	JG	12/97
2			
3			

MARICOPA COUNTY
DEPARTMENT OF TRANSPORTATION
ENGINEERING DIVISION

116TH AVENUE BRIDGE
OVER GILA RIVER

	BY	DATE
DESIGNED	R. PRICE	3/95
DRAWN	J. GILMORE	3/95
CHECKED	V. WISMER	6/95

HOFFMAN-MILLER ENGINEERS, INC.
PHOENIX ARIZONA

Registered Professional Engineer (Civil) Certificate No. 8423 DONALD R. DAVIS Date Signed 12/10/97 ARIZONA, U.S.A.

ABUTMENT 2

SHEET OF S13A

TRACS NO. SS3450IC

FILES
DATES
TIMES
HB.DGN 12/02/94

F.H.W.A. REGION	STATE	PROJECT NO.	SHEET NO.	TOTAL SHEETS	RECORD DRAWING
9	AZ.	STP-MMA-0(18)P	46	68	

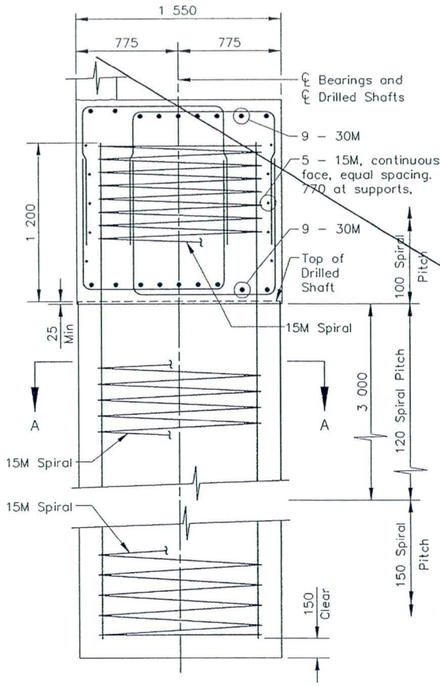

SECTION AT DRILLED SHAFT
Scale 1:20

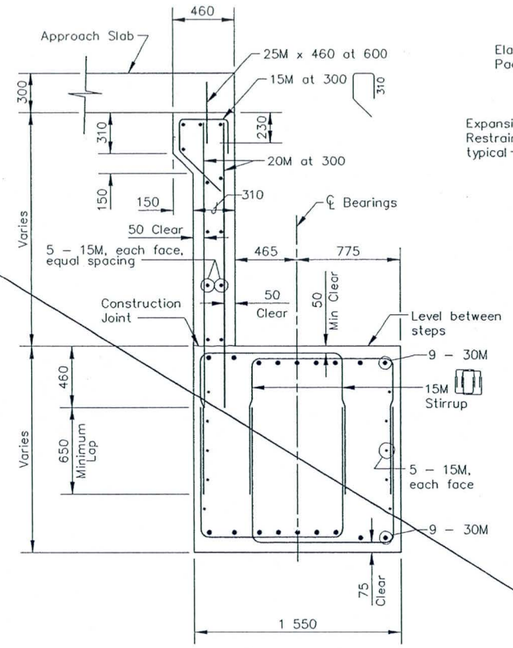

TYPICAL SECTION BETWEEN DRILLED SHAFTS
Scale 1:20

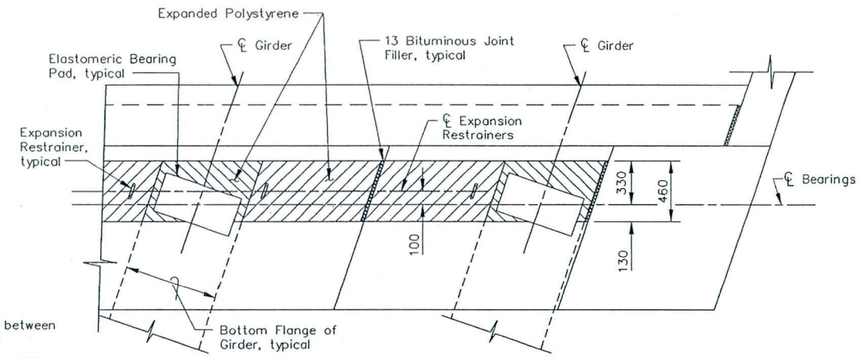

PARTIAL ABUTMENT PLAN
Scale 1:20

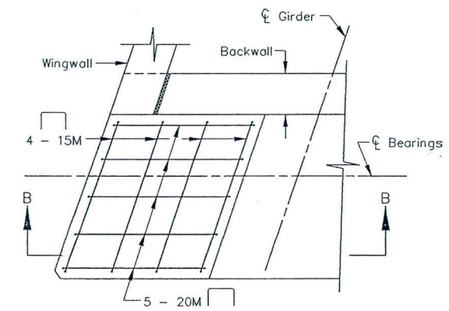

LATERAL RESTRAINING BLOCK DETAIL
Scale 1:20

RECORD DRAWING

RECORD DRAWING NOTATIONS

These record drawings reflect certain dimensions, details, specifications, and plan revisions prepared by others or obtained from other record drawings which have not been independently verified by Entranco. As a result, Entranco is not responsible for the accuracy, appropriateness or completeness of such information depicted in these record drawing notations.

ENTRANCO ENGINEERS, INC.
DATE: 8-10-95

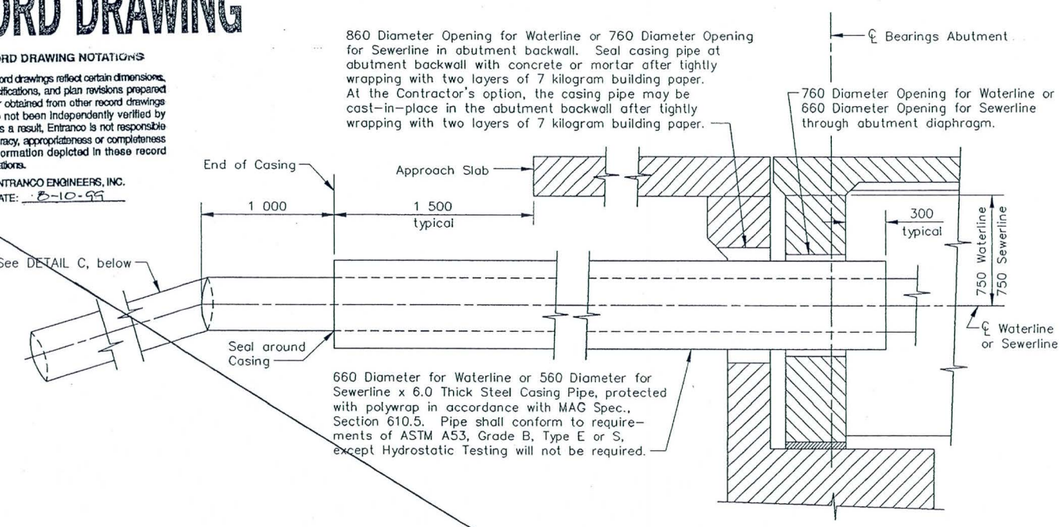

STEEL CASING PIPE FOR UTILITIES
Scale 1:20

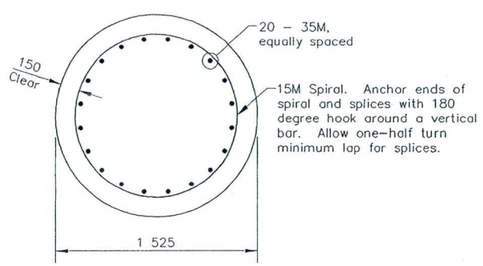

SECTION A–A
Scale 1:20

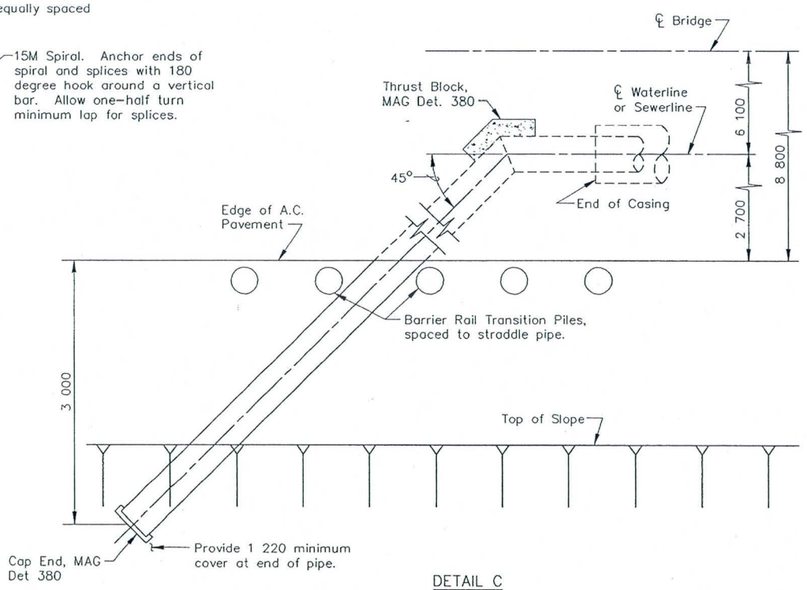

DETAIL C
Scale 1:30

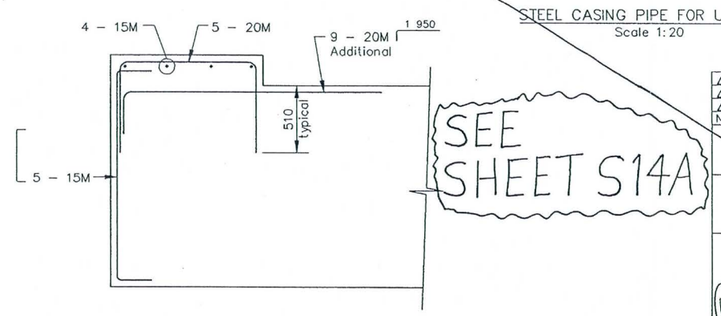

SEE SHEET S14A

SECTION B–B
Scale 1:20

NO.	REVISION	BY	DATE
3			
2			
1			

MARICOPA COUNTY
DEPARTMENT OF TRANSPORTATION
ENGINEERING DIVISION

116TH AVENUE BRIDGE
OVER GILA RIVER

	BY	DATE
DESIGNED	R. PRICE	3/95
DRAWN	J. TERRY	3/95
CHECKED	V. WISMER	6/95

HOFFMAN-MILLER ENGINEERS, INC.
PHOENIX ARIZONA

ABUTMENT DETAILS

SHEET OF S14 S29

TRACS NO. SS34501C

Plotdate: 10/18/94
mcdotstd.bdr 10/18/94

F.H.W.A. REGION	STATE	PROJECT NO.	SHEET NO.	TOTAL SHEETS	RECORD DRAWING
9	AZ.	STP-MMA-0(18)P	46A		

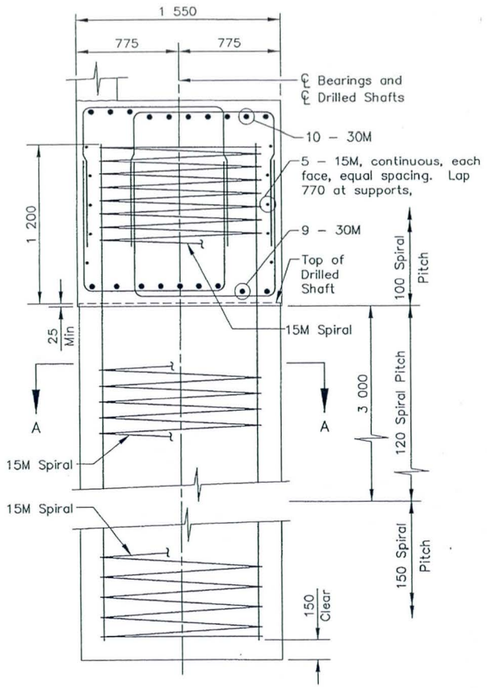

SECTION AT DRILLED SHAFT
Scale 1:20

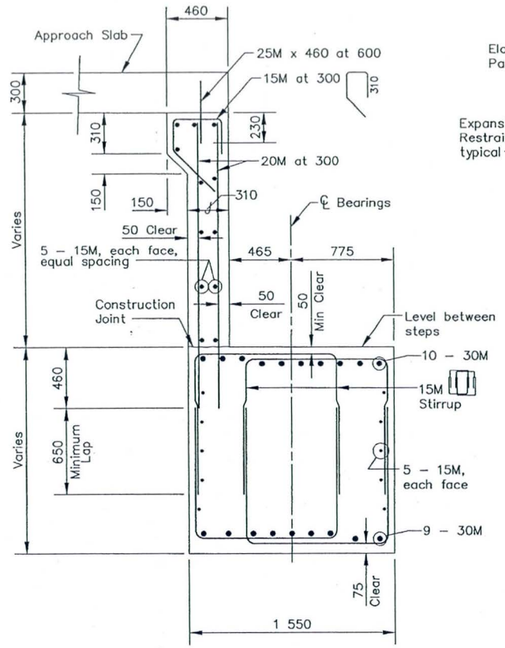

TYPICAL SECTION BETWEEN DRILLED SHAFTS
Scale 1:20

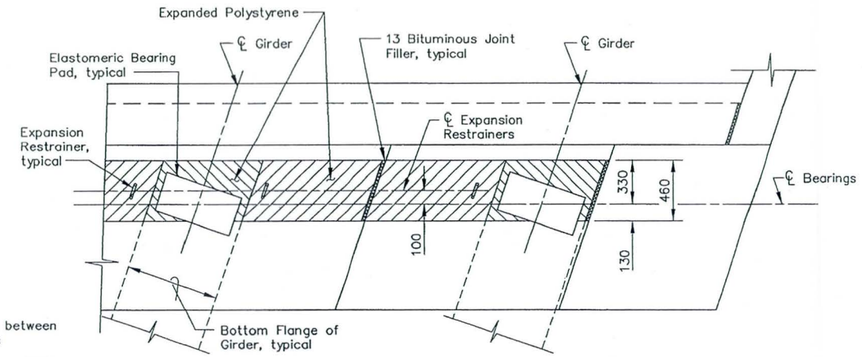

PARTIAL ABUTMENT PLAN
Scale 1:20

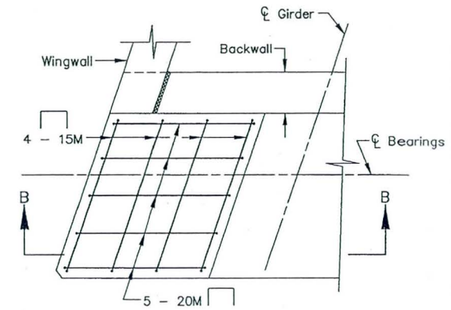

LATERAL RESTRAINING BLOCK DETAIL
Scale 1:20

RECORD DRAWING

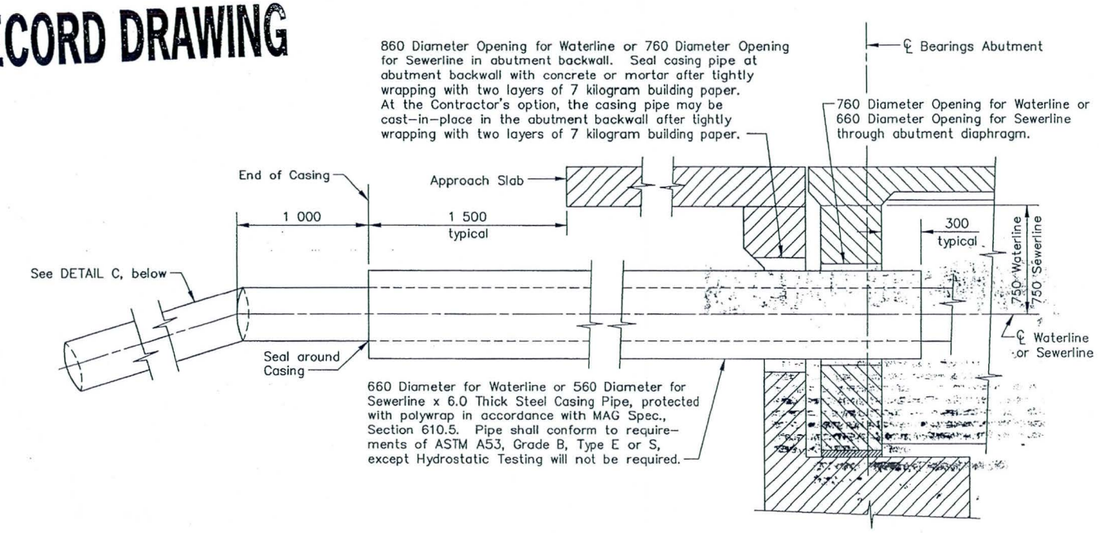

STEEL CASING PIPE FOR UTILITIES
Scale 1:20

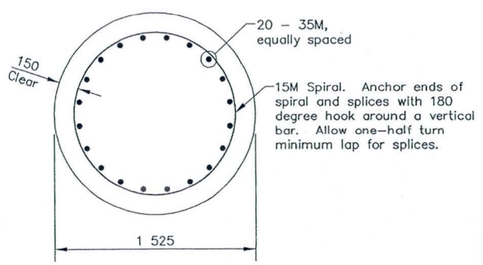

SECTION A–A
Scale 1:20

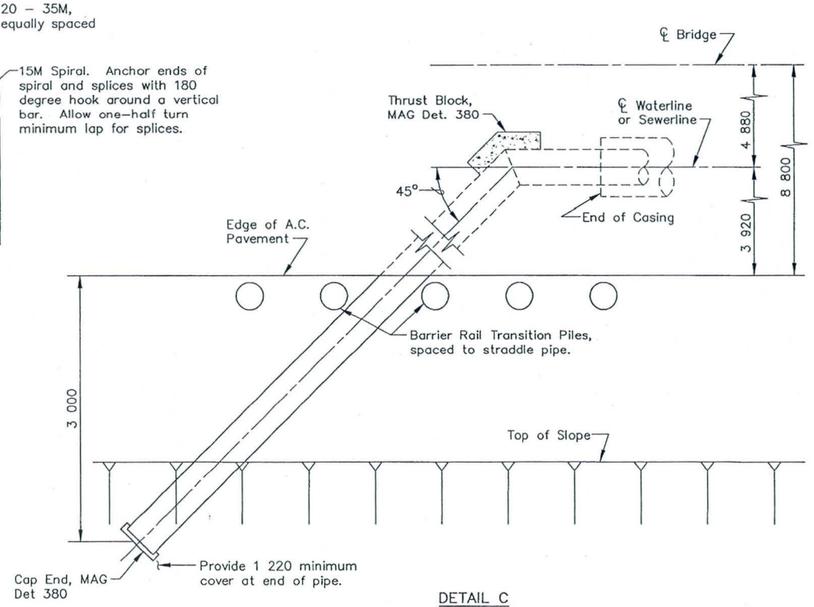

DETAIL C
Scale 1:30

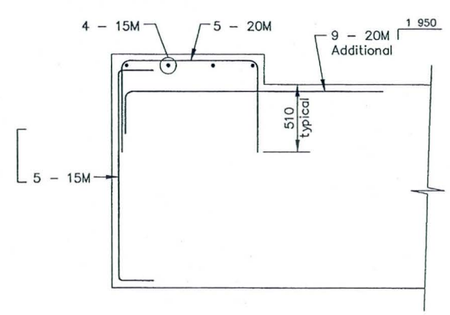

SECTION B–B
Scale 1:20

RECORD DRAWING NOTATIONS

These record drawings reflect certain dimensions, details, specifications, and plan revisions prepared by others or obtained from other record drawings which have not been independently verified by Entranco. As a result, Entranco is not responsible for the accuracy, appropriateness or completeness of such information depicted in these record drawing notations.

ENTRANCO ENGINEERS, INC.
DATE: 8-10-99

TO ACCOMPANY CICOP #1

This Sheet to Replace Sheet S14.

NO.	REVISION	BY	DATE
1	Revised per Value Engineering	JG	12/97
2			
3			

MARICOPA COUNTY
DEPARTMENT OF TRANSPORTATION
ENGINEERING DIVISION

116TH AVENUE BRIDGE
OVER GILA RIVER

	BY	DATE
DESIGNED	R. PRICE	3/95
DRAWN	J. TERRY	3/95
CHECKED	V. WISMER	6/95

Registered Professional Engineer (Civil) No. 8423 DONALD R. DAVIS Date Signed 10/18/94 ARIZONA, U.S.A.

HOFFMAN–MILLER ENGINEERS, INC.
PHOENIX ARIZONA

ABUTMENT DETAILS

SHEET OF S14A

TRACS NO. SS34501C

File I.D.: F:\PIR\DWG\68832A01.DWG PLOT SIZE: 1:20
Plotdate: 12/22/97
mcdotstd.bdr 10/18/94

F.H.W.A. REGION	STATE	PROJECT NO.	SHEET NO.	TOTAL SHEETS	RECORD DRAWING
9	AZ.	STP-MMA-0(18)P	47	68	

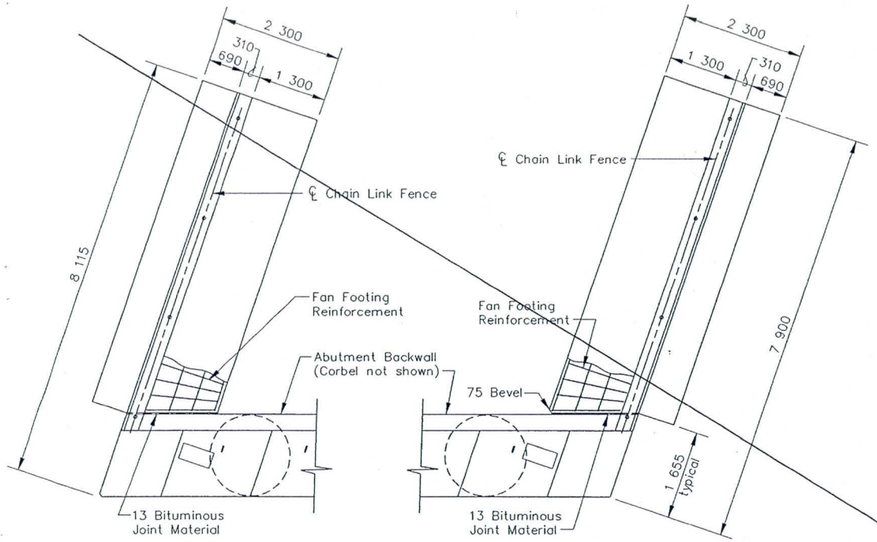

WINGWALL PLAN
Scale 1:50

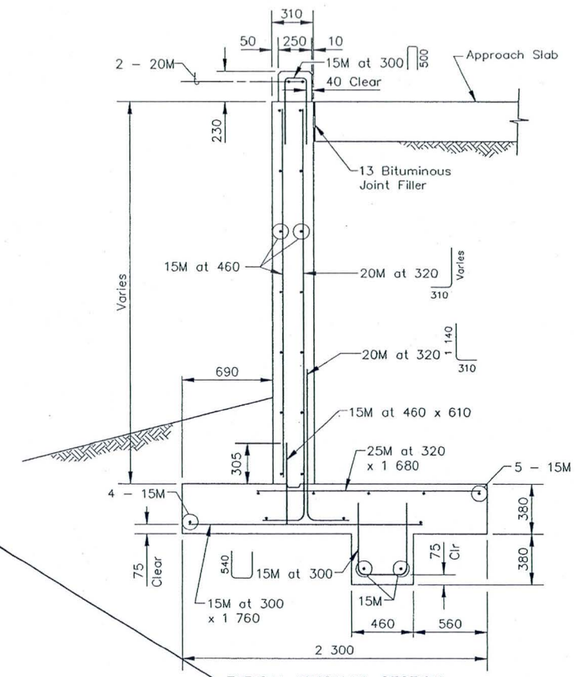

TYPICAL WINGWALL SECTION
Scale 1:20

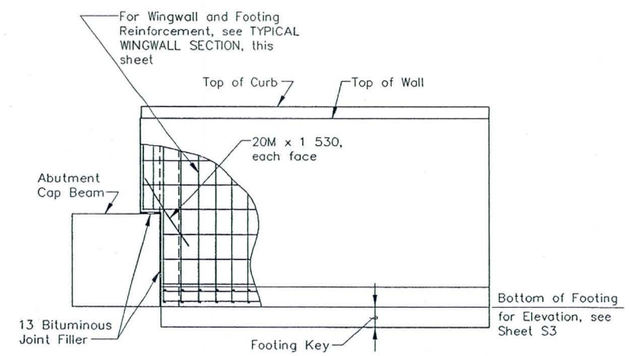

TYPICAL WINGWALL ELEVATION
Scale 1:50

RECORD DRAWING

RECORD DRAWING NOTATIONS

These record drawings reflect certain dimensions, details, specifications, and plan revisions prepared by others or obtained from other record drawings which have not been independently verified by Entranco. As a result, Entranco is not responsible for the accuracy, appropriateness or completeness of such information depicted in these record drawing notations.

ENTRANCO ENGINEERS, INC.
DATE: 8-10-99

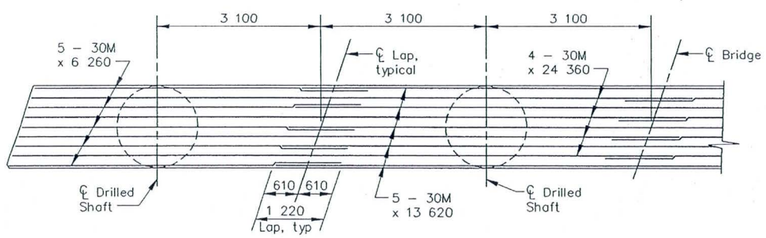

ABUTMENT CAP TOP REINFORCEMENT
Scale 1:50

NOTE:

Reinforcement is symmetrical about ℄ Bridge.

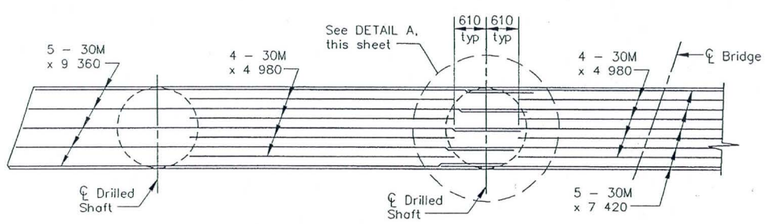

ABUTMENT CAP BOTTOM REINFORCEMENT
Scale 1:50

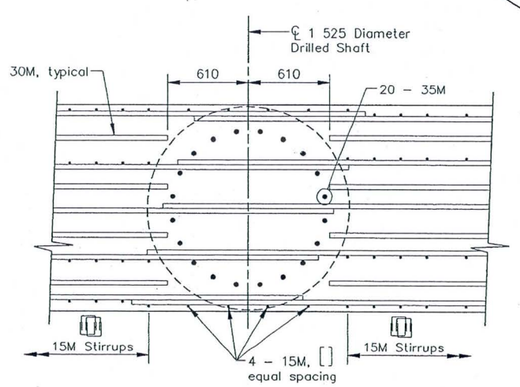

DETAIL A
Scale 1:20

SEE SHEET S15A

NO.	REVISION	BY	DATE
3			
2			
1			

MARICOPA COUNTY
DEPARTMENT OF TRANSPORTATION
ENGINEERING DIVISION

116TH AVENUE BRIDGE
OVER GILA RIVER

	BY	DATE
DESIGNED	R. PRICE	3/95
DRAWN	J. TERRY	3/95
CHECKED	V. WISMER	6/95

HOFFMAN-MILLER ENGINEERS, INC.
PHOENIX ARIZONA

ABUTMENT AND WINGWALL DETAILS

SHEET OF S15 S29

TRACS NO. SS34501C

Plotdate: 10/9/9
mcdotstd.bdr 10/18/94

F.H.W.A. REGION	STATE	PROJECT NO.	SHEET NO.	TOTAL SHEETS	RECORD DRAWING
9	AZ.	STP-MMA-0(18)P	47A		

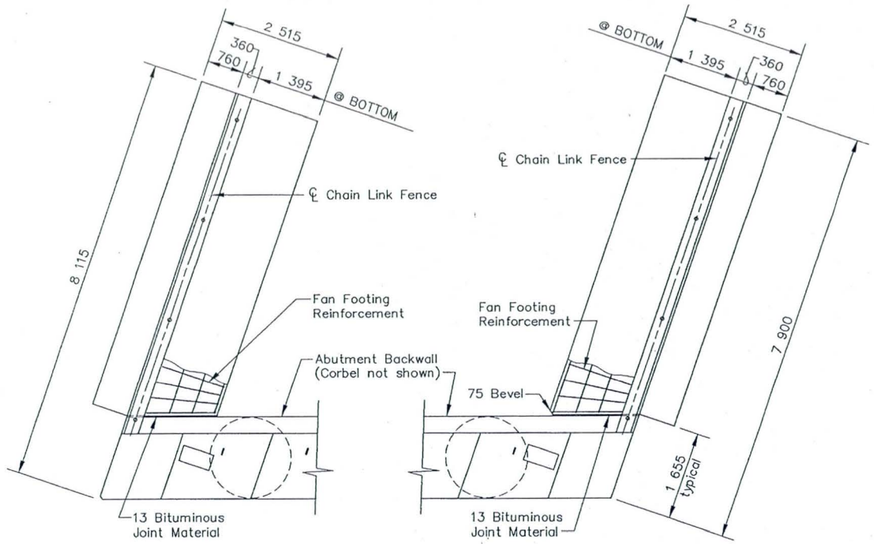

WINGWALL PLAN
Scale 1:50

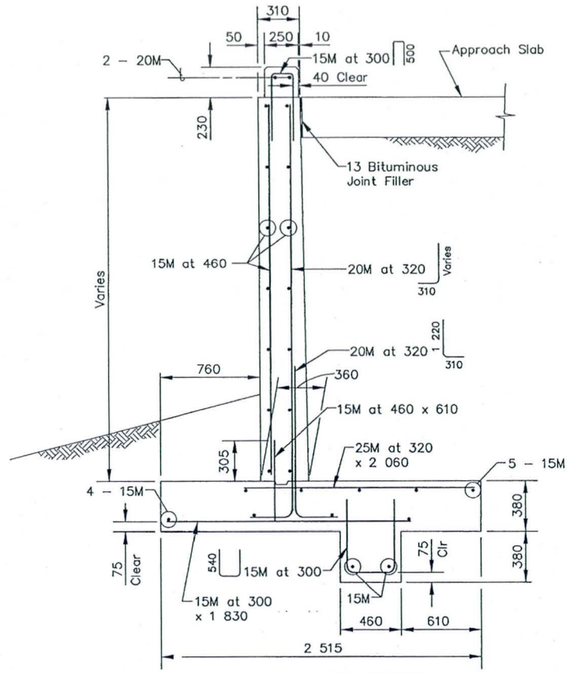

TYPICAL WINGWALL SECTION
Scale 1:20

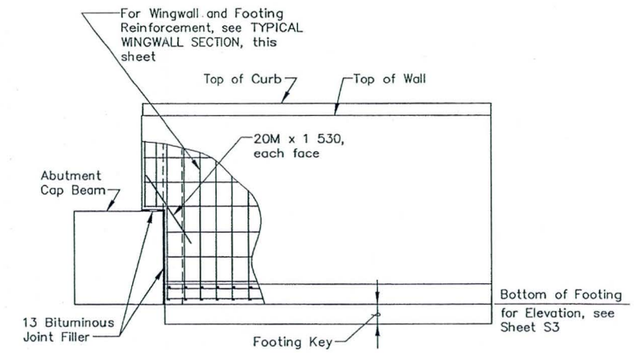

TYPICAL WINGWALL ELEVATION
Scale 1:50

RECORD DRAWING

RECORD DRAWING NOTATIONS

These record drawings reflect certain dimensions, details, specifications, and plan revisions prepared by others or obtained from other record drawings which have not been independently verified by Entranco. As a result, Entranco is not responsible for the accuracy, appropriateness or completeness of such information depicted in these record drawing notations.

ENTRANCO ENGINEERS, INC.
DATE: 8-10-79

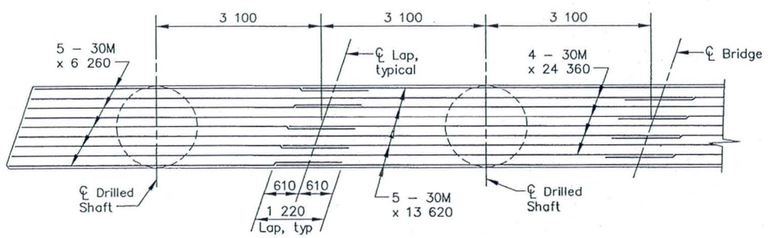

ABUTMENT CAP TOP REINFORCEMENT
Scale 1:50

NOTE:

Reinforcement is symmetrical about ℄ Bridge.

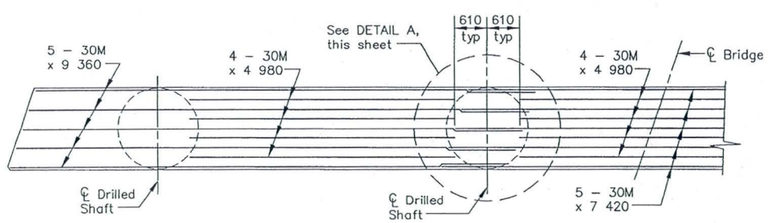

ABUTMENT CAP BOTTOM REINFORCEMENT
Scale 1:50

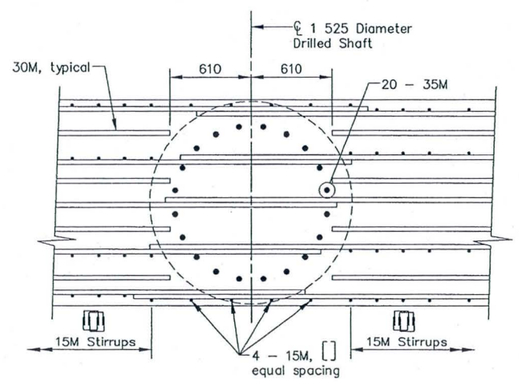

DETAIL A
Scale 1:20

TO ACCOMPANY CICOP #1

This Sheet to Replace Sheet S14.

NO.	REVISION	BY	DATE
1	Revised per Value Engineering	JG	12/97
2			
3			

MARICOPA COUNTY
DEPARTMENT OF TRANSPORTATION
ENGINEERING DIVISION

116TH AVENUE BRIDGE
OVER GILA RIVER

	BY	DATE
DESIGNED	R. PRICE	3/95
DRAWN	J. TERRY	3/95
CHECKED	V. WISMER	6/95

Registered Professional Engineer (Civil) CERTIFICATE NO. 18423 DONALD R. DAVIS Date Signed 12/17/97 ARIZONA, U.S.A.

HOFFMAN-MILLER ENGINEERS, INC.
PHOENIX ARIZONA

ABUTMENT AND WINGWALL DETAILS

SHEET OF S15A

TRACS NO. SS34501C

File I.D.: F:\PIR\DWG\68832WW0.DWG PLOT SCALE: 1:50
Plotdate: 12/22/97
mcdotstd.bdr 10/18/94

F.H.W.A. REGION	STATE	PROJECT NO.	SHEET NO.	TOTAL SHEETS	RECORD DRAWING
9	AZ.	STP-MMA-0(18)P	48	68	

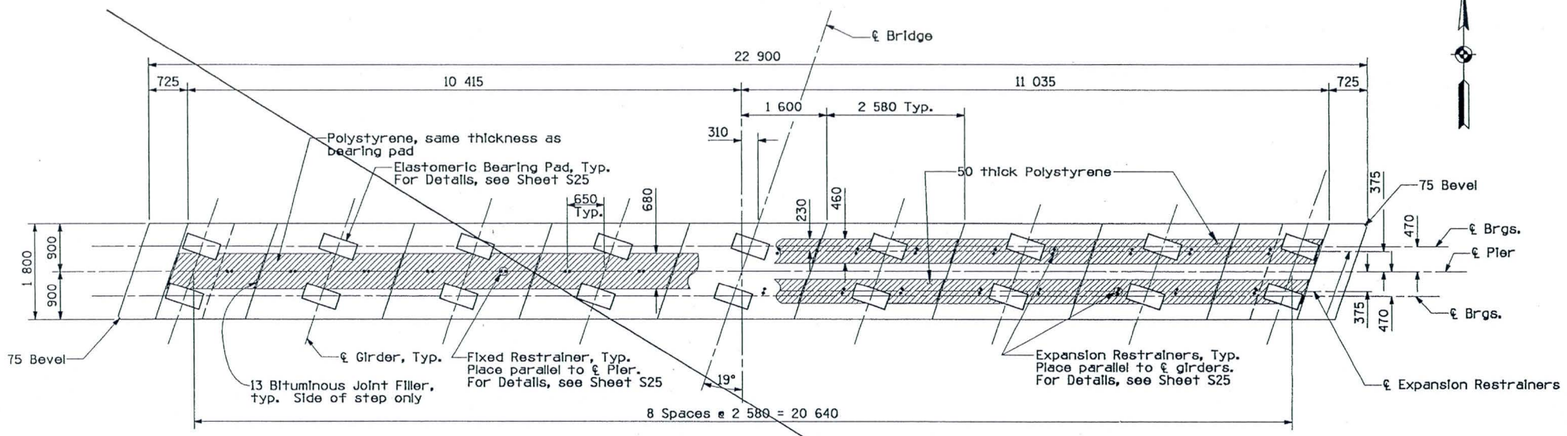

TYPICAL PIER PLAN
Scale 1:50

PIER ELEVATIONS									
El.	Pier 1	Pier 2	Pier 3	Pier 4	Pier 5	Pier 6	Pier 7	Pier 8	Pier 9
A	290.307	291.316	292.140	292.931	293.562	294.009	294.298	294.552	294.647
B	290.377	291.383	292.205	292.992	293.621	294.066	294.352	294.603	294.696
C	290.447	291.450	292.269	293.054	293.680	294.122	294.406	294.655	294.745
D	290.516	291.517	292.333	293.116	293.739	294.179	294.460	294.706	294.794
E	290.586	291.584	292.398	293.178	293.799	294.236	294.513	294.757	294.842
F	290.604	291.553	292.364	293.142	293.760	294.194	294.470	294.711	294.793
G	290.619	291.522	292.331	293.106	293.721	294.153	294.426	294.665	294.744
H	290.629	291.492	292.298	293.070	293.683	294.112	294.382	294.618	294.695
J	290.635	291.461	292.264	293.034	293.644	294.071	294.338	294.572	294.646
K	288.790	289.798	290.622	291.412	292.043	292.490	292.778	293.031	293.126
L	289.056	290.054	290.868	291.648	292.269	292.706	292.983	293.227	293.312
M	289.102	289.936	290.740	291.510	292.121	292.548	292.816	293.050	293.125

PIER ELEVATIONS								
El.	Pier 10	Pier 11	Pier 12	Pier 13	Pier 14	Pier 15	Pier 16	Pier 17
A	294.559	294.311	294.029	293.589	292.964	292.181	291.363	290.361
B	294.605	294.355	294.070	293.627	293.000	292.214	291.394	290.389
C	294.651	294.398	294.111	293.666	293.036	292.247	291.424	290.417
D	294.697	294.442	294.152	293.704	293.071	292.280	291.455	290.445
E	294.743	294.485	294.193	293.742	293.107	292.313	291.485	290.473
F	294.692	294.431	294.136	293.683	293.045	292.249	291.418	290.403
G	294.640	294.377	294.080	293.623	292.983	292.184	291.351	290.333
H	294.588	294.323	294.023	293.564	292.921	292.119	291.283	290.263
J	294.537	294.268	293.966	293.504	292.859	292.054	291.216	290.194
K	293.037	292.789	292.507	292.066	291.441	290.657	289.839	288.837
L	293.213	292.955	292.663	292.212	291.577	290.783	289.955	288.943
M	293.016	292.748	292.446	291.985	291.340	290.536	289.698	288.676

RECORD DRAWING

RECORD DRAWING NOTATIONS

These record drawings reflect certain dimensions, details, specifications, and plan revisions prepared by others or obtained from other record drawings which have not been independently verified by Entranco. As a result, Entranco is not responsible for the accuracy, appropriateness or completeness of such information depicted in these record drawing notations.

ENTRANCO ENGINEERS, INC.
DATE: 8-10-99

BEARING PADS	
Pier No.	Thickness
1	50
2	50
3	100
4	50
5	25
6	50
7	100
8	50
9	25
10	50
11	100
12	50
13	25
14	50
15	100
16	50
17	50

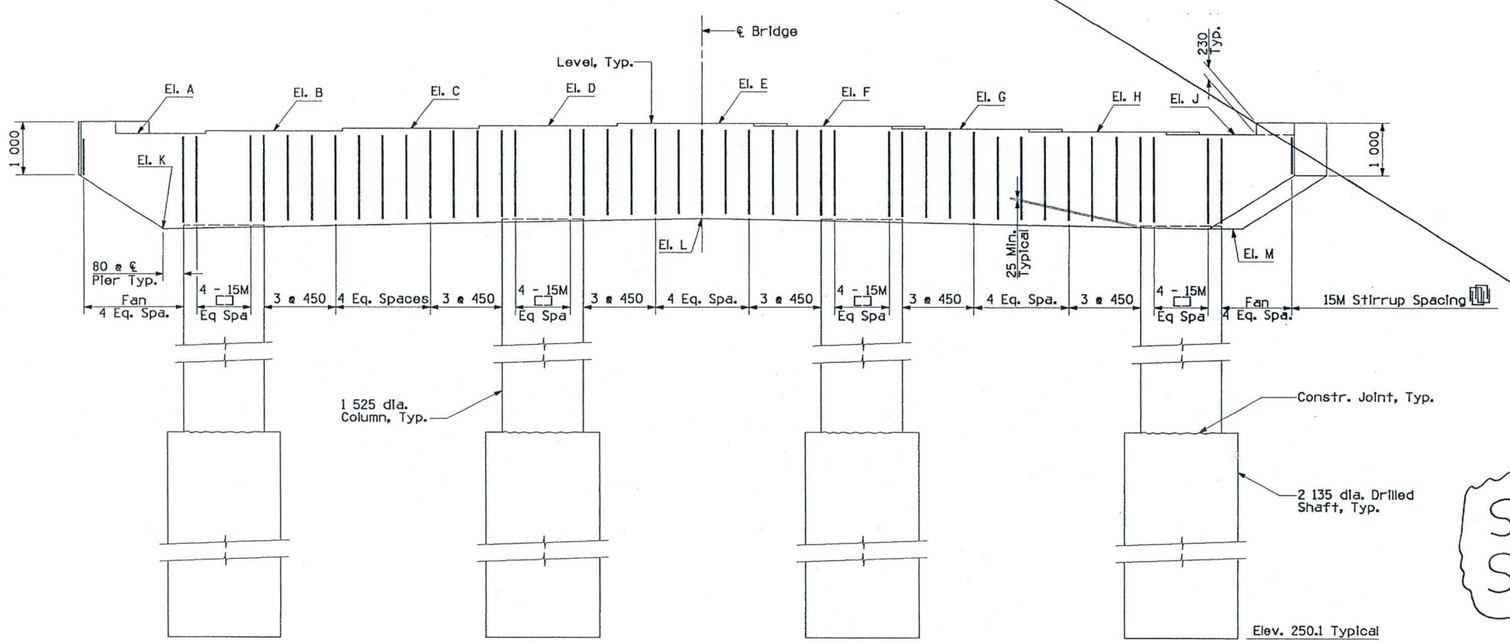

TYPICAL PIER ELEVATION
Scale 1:50

SEE SHEET S16A

NO.	REVISION	BY	DATE
1			
2			
3			

MARICOPA COUNTY
DEPARTMENT OF TRANSPORTATION
ENGINEERING DIVISION

116TH AVENUE BRIDGE
OVER GILA RIVER

	BY	DATE
DESIGNED	V. WISMER	11/94
DRAWN	J. GILMORE	11/94
CHECKED	R. PRICE	6/95

HOFFMAN-MILLER ENGINEERS, INC.
PHOENIX ARIZONA

PIER PLAN AND ELEVATION

SHEET OF S16 S29

TRACS NO. SS34501C

FILE
DATE
MB. LOC 12/02/94

F.H.W.A. REGION	STATE	PROJECT NO.	SHEET NO.	TOTAL SHEETS	RECORD DRAWING
9	AZ.	STP-MMA-0(18)P	48A		

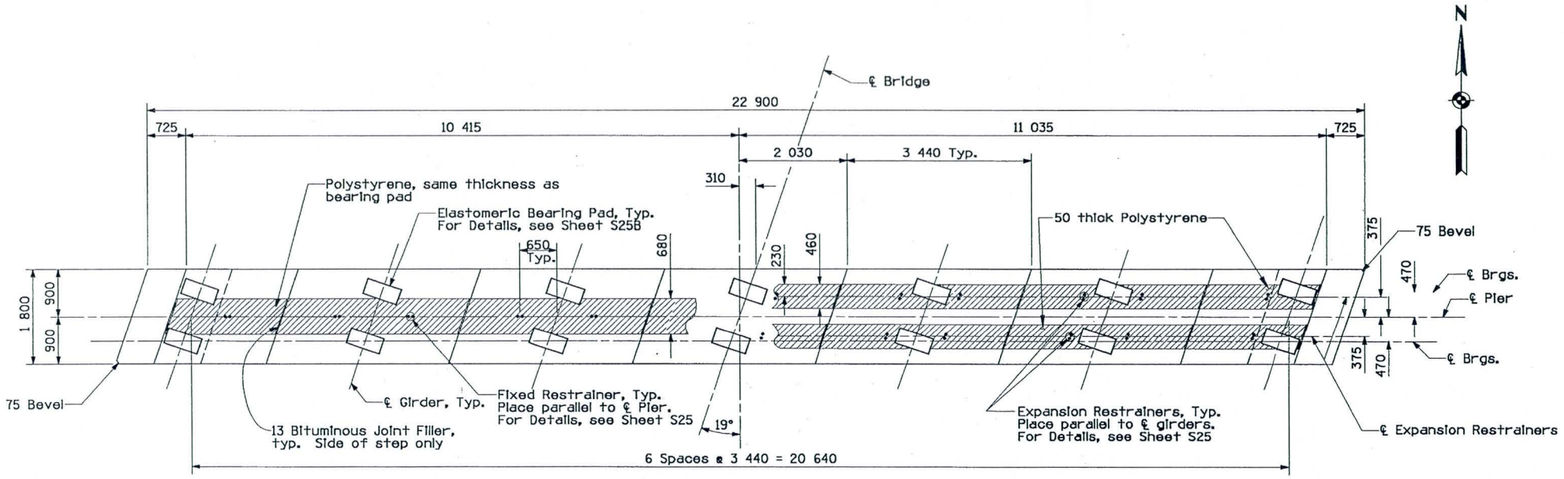

TYPICAL PIER PLAN
Scale 1:50

PIER ELEVATIONS									
El.	Pier 1	Pier 2	Pier 3	Pier 4	Pier 5	Pier 6	Pier 7	Pier 8	Pier 9
A	290.120	291.129	291.978	292.768	293.375	293.847	294.136	294.390	294.460
B	290.213	291.218	292.064	292.851	293.454	293.923	294.208	294.458	294.525
C	290.306	291.308	292.150	292.933	293.533	293.998	294.280	294.527	294.590
D	290.399	291.397	292.236	293.016	293.612	294.074	294.351	294.595	294.655
E	290.398	291.331	292.191	292.968	293.560	294.019	294.293	294.534	294.590
F	290.389	291.265	292.147	292.920	293.509	293.964	294.235	294.472	294.525
G	290.373	291.199	292.102	292.872	293.457	293.909	294.176	294.410	294.459
K	288.565	289.575	290.425	291.216	291.824	292.297	292.586	292.841	292.913
L	288.869	289.867	290.706	291.486	292.082	292.544	292.821	293.065	293.125
M	288.922	289.733	290.560	291.329	291.913	292.364	292.630	292.863	292.912

PIER ELEVATIONS								
El.	Pier 10	Pier 11	Pier 12	Pier 13	Pier 14	Pier 15	Pier 16	Pier 17
A	294.379	294.149	293.867	293.402	292.802	292.018	291.176	290.174
B	294.458	294.207	293.922	293.453	292.850	292.063	291.217	290.212
C	294.520	294.265	293.977	293.504	292.897	292.107	291.257	290.249
D	294.581	294.323	294.031	293.555	292.945	292.151	291.298	290.286
E	294.512	294.251	293.955	293.476	292.862	292.065	291.208	290.193
F	294.444	294.179	293.880	293.397	292.780	291.979	291.119	290.100
G	294.375	294.106	293.804	293.317	292.697	291.892	291.029	290.006
K	292.850	292.603	292.323	291.858	291.259	290.477	289.635	288.634
L	293.051	292.793	292.501	292.025	291.415	290.621	289.768	288.756
M	292.826	292.557	292.253	291.766	291.145	290.339	289.475	288.451

RECORD DRAWING

RECORD DRAWING NOTATIONS

These record drawings reflect certain dimensions, details, specifications, and plan revisions prepared by others or obtained from other record drawings which have not been independently verified by Entranco. As a result, Entranco is not responsible for the accuracy, appropriateness or completeness of such information depicted in these record drawing notations.

ENTRANCO ENGINEERS, INC.
DATE: 8-10-99

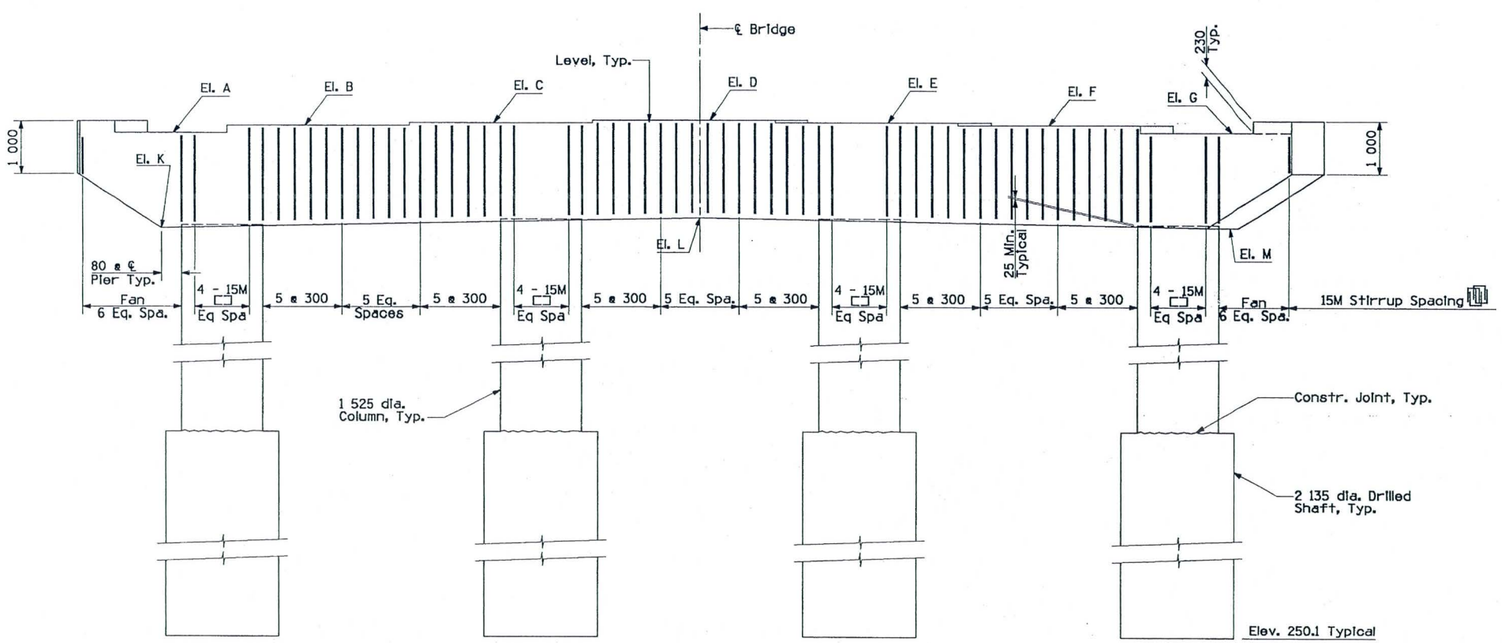

TYPICAL PIER ELEVATION
Scale 1:50

TO ACCOMPANY CICOP #1

This Sheet to Replace Sheet S16.

NO.	REVISION	BY	DATE
1	Revised per Value Engineering	JG	12/97
2			
3			

MARICOPA COUNTY
DEPARTMENT OF TRANSPORTATION
ENGINEERING DIVISION

116TH AVENUE BRIDGE
OVER GILA RIVER

	BY	DATE
DESIGNED	V. WISMER	11/94
DRAWN	J. GILMORE	11/94
CHECKED	R. PRICE	6/95

Registered Professional Engineer (Civil) 18423 DONALD R. DAVIS Date Signed 12/22/97 ARIZONA, U.S.A.

HOFFMAN-MILLER ENGINEERS, INC.
PHOENIX ARIZONA

PIER PLAN AND ELEVATION

SHEET OF S16A

TRACS NO. SS34501C

FILE
DATE
NAME
MODIFIED 12/02/94

F.H.W.A. REGION	STATE	PROJECT NO.	SHEET NO.	TOTAL SHEETS	RECORD DRAWING
9	AZ.	ST-MMA-0(18)P	49	68	

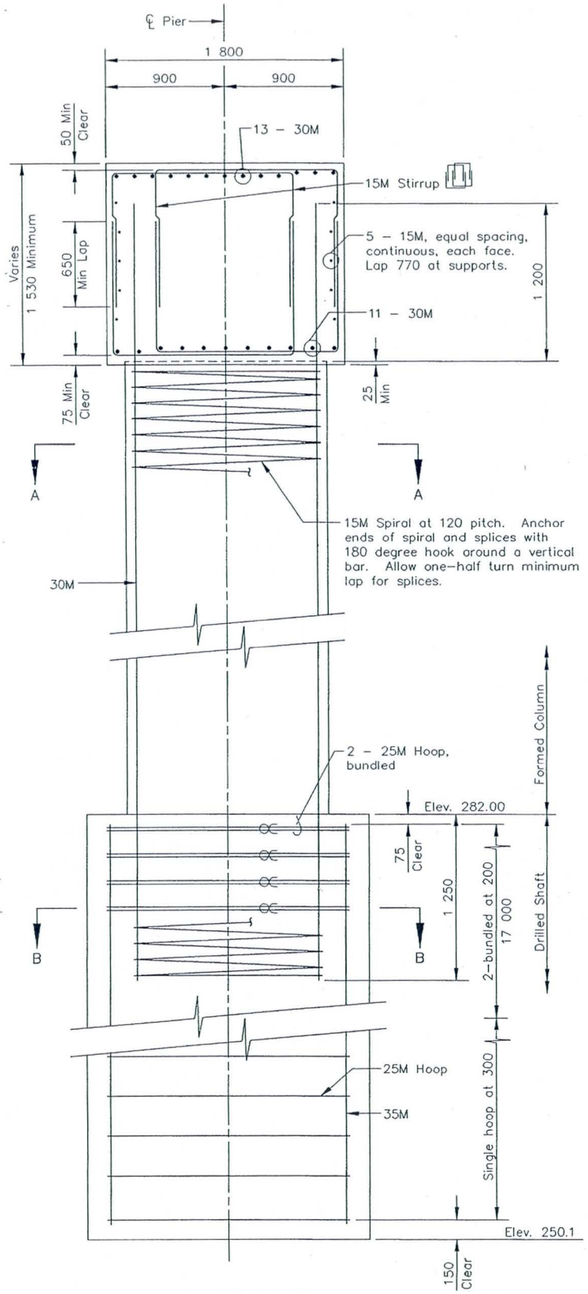

TYPICAL PIER SECTION
Scale 1:20

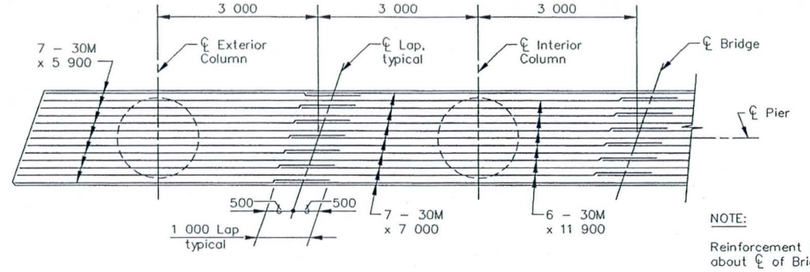

CAP BEAM – TOP REINFORCEMENT LAYOUT
Scale 1:50

NOTE:
Reinforcement is symmetrical about ℄ of Bridge.

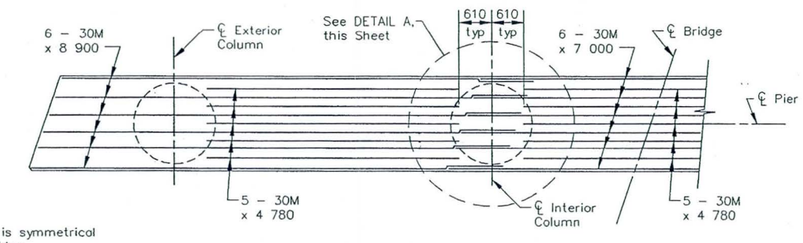

CAP BEAM – BOTTOM REINFORCEMENT LAYOUT
Scale 1:50

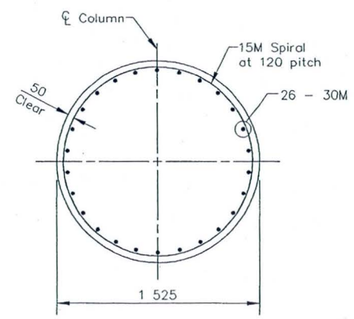

SECTION A–A
Scale 1:20

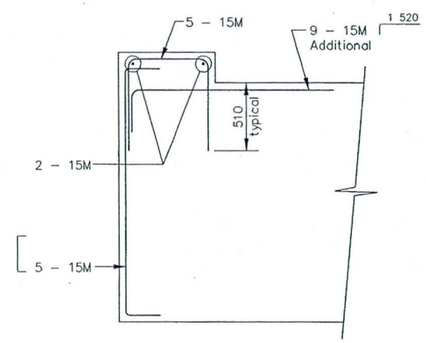

SECTION C–C
Scale 1:20

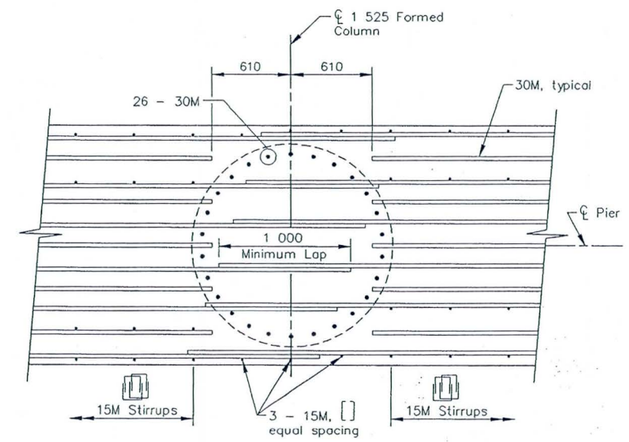

DETAIL A
Scale 1:20

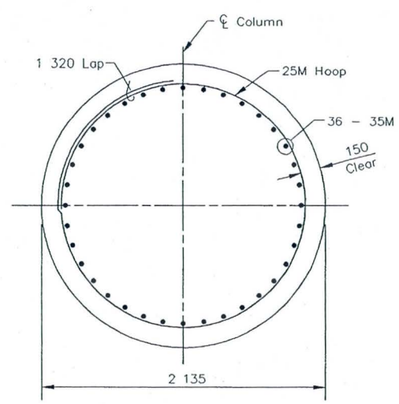

SECTION B–B
Scale 1:20

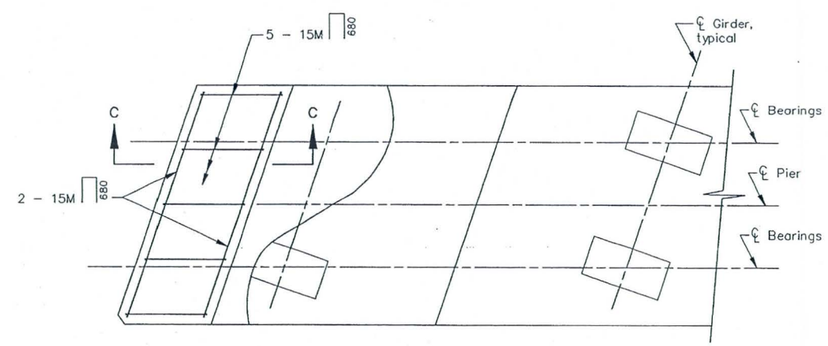

PARTIAL PIER CAP PLAN
Scale 1:20

RECORD DRAWING

RECORD DRAWING NOTATIONS

These record drawings reflect certain dimensions, details, specifications, and plan revisions prepared by others or obtained from other record drawings which have not been independently verified by Entranco. As a result, Entranco is not responsible for the accuracy, appropriateness or completeness of such information depicted in these record drawing notations.

ENTRANCO ENGINEERS, INC.
DATE: 8-10-99

NO.	REVISION	BY	DATE
3			
2			
1			

MARICOPA COUNTY
DEPARTMENT OF TRANSPORTATION
ENGINEERING DIVISION

116TH AVENUE BRIDGE
OVER GILA RIVER

	BY	DATE
DESIGNED	R. PRICE	3/95
DRAWN	J. TERRY	3/95
CHECKED	V. WISMER	7/95

HOFFMAN–MILLER ENGINEERS, INC.
PHOENIX ARIZONA

PIER DETAILS

SHEET OF
S17 S29

TRACS NO. SS34501C

mdotstd.bdr 10/18/94

F.H.W.A. REGION	STATE	PROJECT NO.	SHEET NO.	TOTAL SHEETS	RECORD DRAWING
9	AZ.	STP-MMA-0(18)P	50	68	

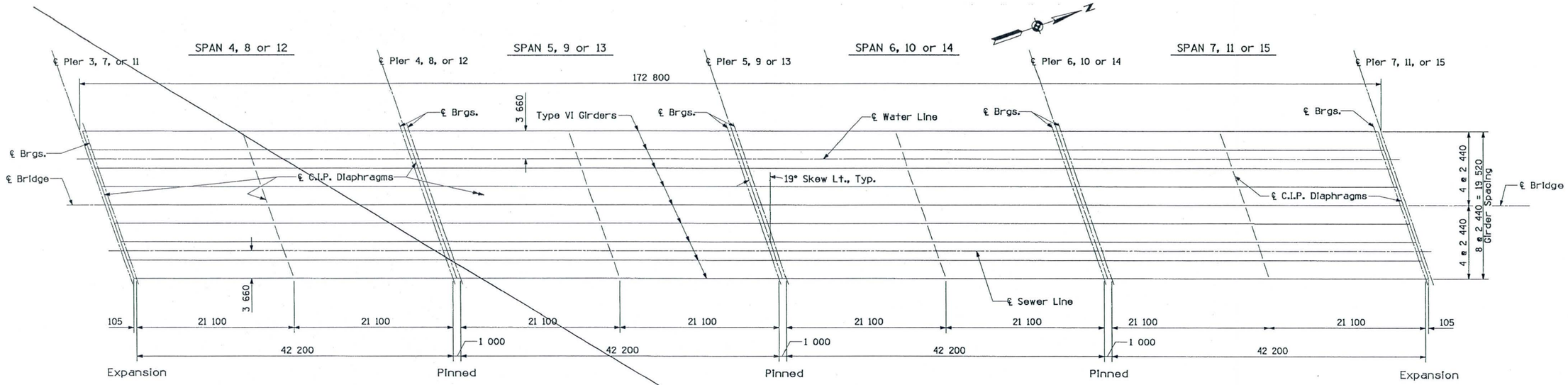

GIRDER LAYOUT - TYPICAL 4 SPAN UNIT
Scale 1:250

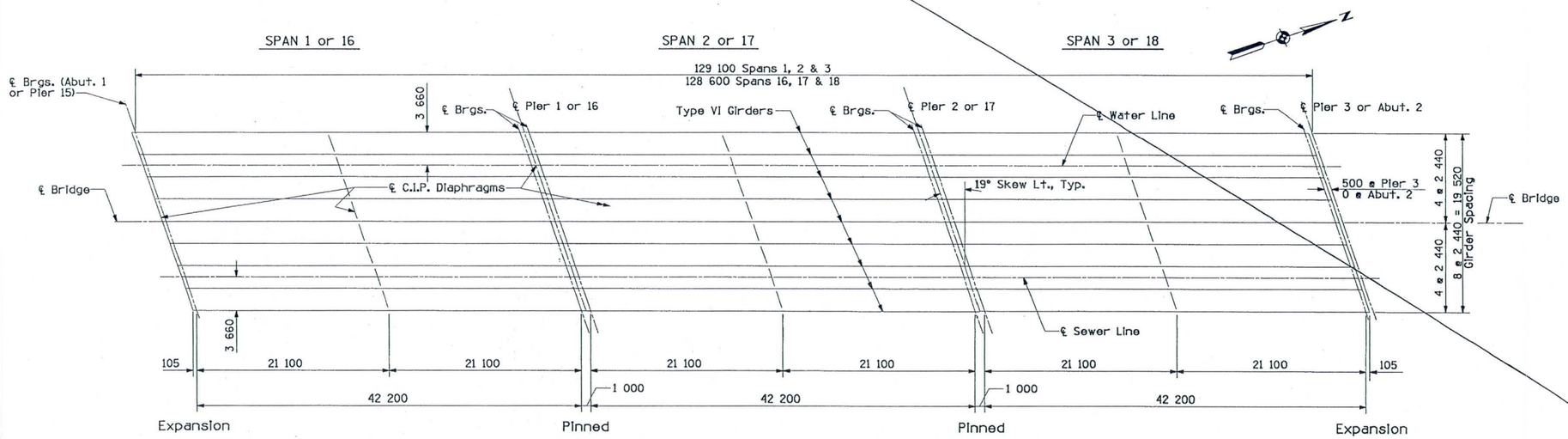

GIRDER LAYOUT - TYPICAL 3 SPAN UNIT
Scale 1:250

SEE SHEET S18A

RECORD DRAWING

RECORD DRAWING NOTATIONS

These record drawings reflect certain dimensions, details, specifications, and plan revisions prepared by others or obtained from other record drawings which have not been independently verified by Entranco. As a result, Entranco is not responsible for the accuracy, appropriateness or completeness of such information depicted in these record drawing notations.

ENTRANCO ENGINEERS, INC.
DATE: 8-10-99

NO.	REVISION	BY	DATE
1			
2			
3			

MARICOPA COUNTY
DEPARTMENT OF TRANSPORTATION
ENGINEERING DIVISION

116TH AVENUE BRIDGE
OVER GILA RIVER

	BY	DATE
DESIGNED	V. WISMER	1/95
DRAWN	J. GILMORE	1/95
CHECKED	V. WISMER	6/95

HOFFMAN-MILLER ENGINEERS, INC.
PHOENIX ARIZONA

GIRDER LAYOUT

SHEET OF
S18 S29

TRACS NO. SS3450IC

$$FILE$$
$$DATE$$
MB.DGN 12/02/94

F.W.H.A. REGION	STATE	PROJECT NO.	SHEET NO.	TOTAL SHEETS	RECORD DRAWING
9	AZ.	STP-MMA-0(18)P	50A		

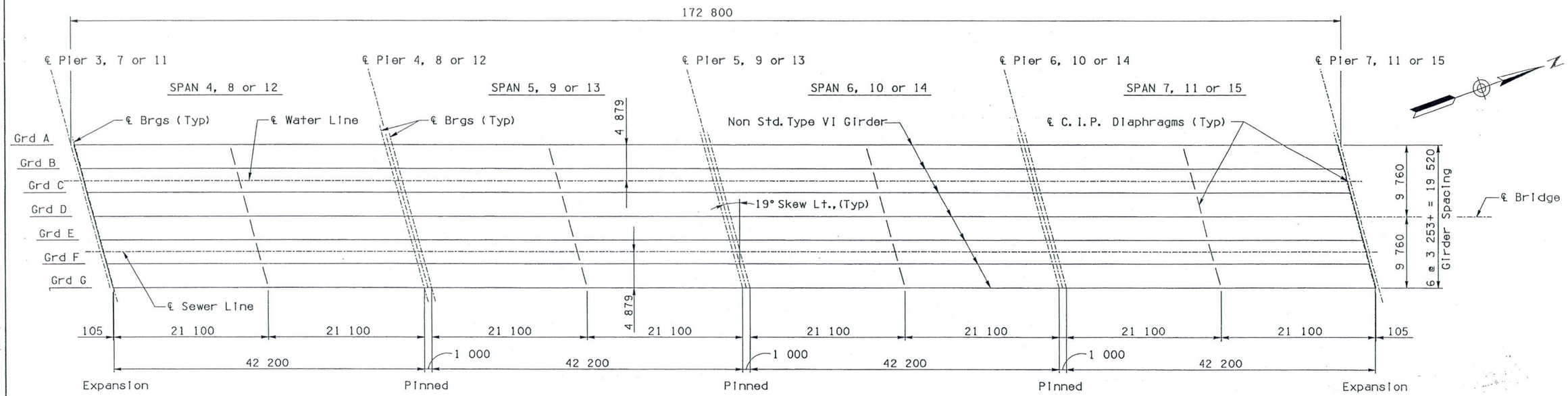

GIRDER LAYOUT - TYPICAL 4 SPAN UNIT
Scale: 1:250

RECORD DRAWING

RECORD DRAWING NOTATIONS
These record drawings reflect certain dimensions, details, specifications, and plan revisions prepared by others or obtained from other record drawings which have not been independently verified by Entranco. As a result, Entranco is not responsible for the accuracy, appropriateness or completeness of such information depicted in these record drawing notations.
ENTRANCO ENGINEERS, INC.
DATE: 8-10-99

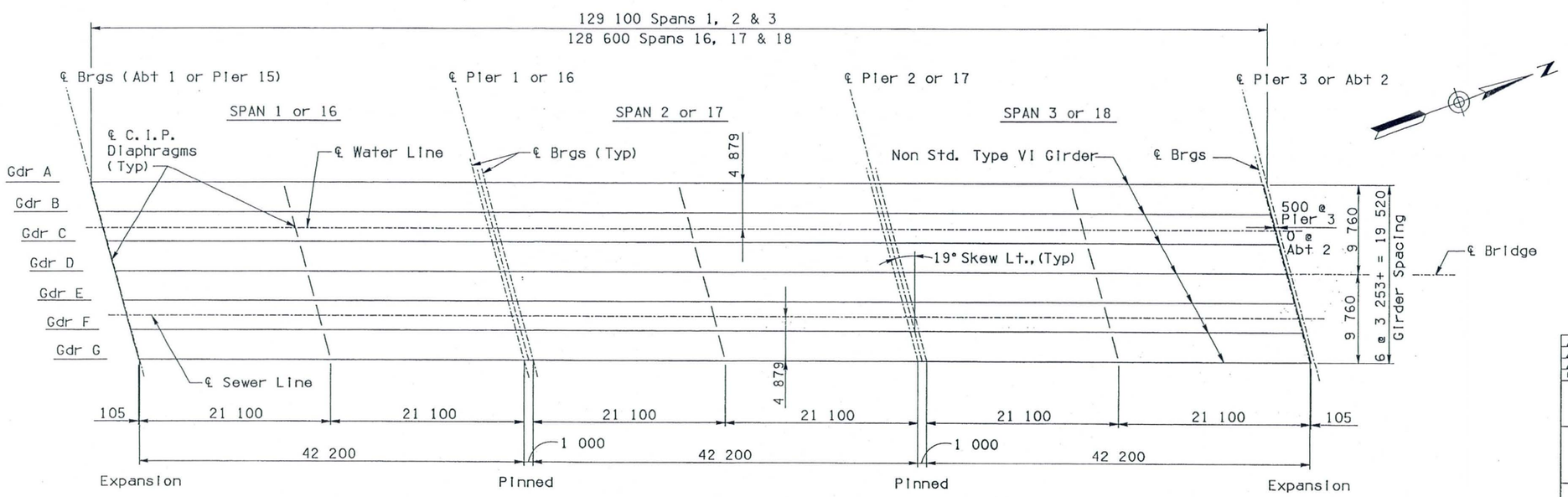

GIRDER LAYOUT - TYPICAL 3 SPAN UNIT
Scale: 1:250

TO ACCOMPANY CICOP #1

This Sheet to Replace Sheet S18

NO.	REVISION	BY	DATE
1	Revised per Value Engineering	DH	12/97
2			
3			

MARICOPA COUNTY
DEPARTMENT OF TRANSPORTATION
ENGINEERING DIVISION

116TH AVENUE BRIDGE
OVER GILA RIVER

	BY	DATE
DESIGNED	DNH	12/97
DRAWN	AJM	12/97
CHECKED	JTO	12/97

TY-LIN INTERNATIONAL
Civil and Structural Engineers
TEMPE ARIZONA

GIRDER LAYOUT

SHEET OF S18A

TRACS NO. SS34501C

C:/BRIDGES/116AVE/GRDLAY.DGN 12/18/97

F.H.W.A. REGION	STATE	PROJECT NO.	SHEET NO.	TOTAL SHEETS	RECORD DRAWING
9	AZ.	STP-MMA-0(18)P	51	68	

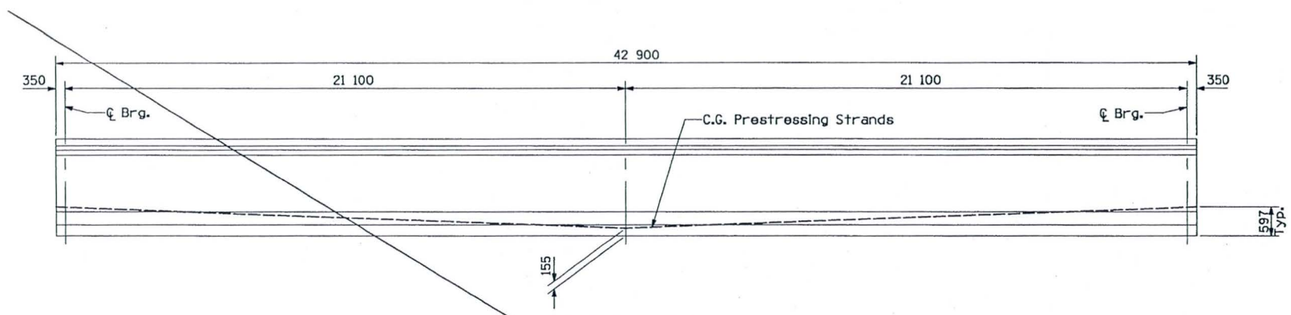

STRAND PROFILE
Scale 1:100 Horizontal
1:50 Vertical

PRESTRESSING NOTES

Prestressing Steel shall be Type 1862 MPa, 7-wire low-relaxation strand conforming to ASTM A416.

Minimum Utimate Strength of 13mm diameter strand = 184 kN; Area = 99mm².

Minimum Strength of Concrete at time of transfer (f'c) = 31 MPa.

Minimum Ultimate (28 day) strength of concrete (f'c) = 45 MPa.

Pw = Working Force = Total force per girder remaining after all losses have occurred = 6374.9 kN.

Path of center of gravity of prestressing steel is to approximate a parabola with a minimum of two hold-downs within the span.

All girder reinforcing steel shall conform to ASTM A615M, Grade 60.

Ends of prestressing strand exposed to earth or weather shall be protected by a coating of bituminous material.

Top surface of girders is to be intentionally roughened to an amplitude of approximately 6mm to insure adequate bond with the deck slab.

RECORD DRAWING

RECORD DRAWING NOTATIONS

These record drawings reflect certain dimensions, details, specifications, and plan revisions prepared by others or obtained from other record drawings which have not been independently verified by Entranco. As a result, Entranco is not responsible for the accuracy, appropriateness or completeness of such information depicted in these record drawing notations.

ENTRANCO ENGINEERS, INC.
DATE: 8-10-99

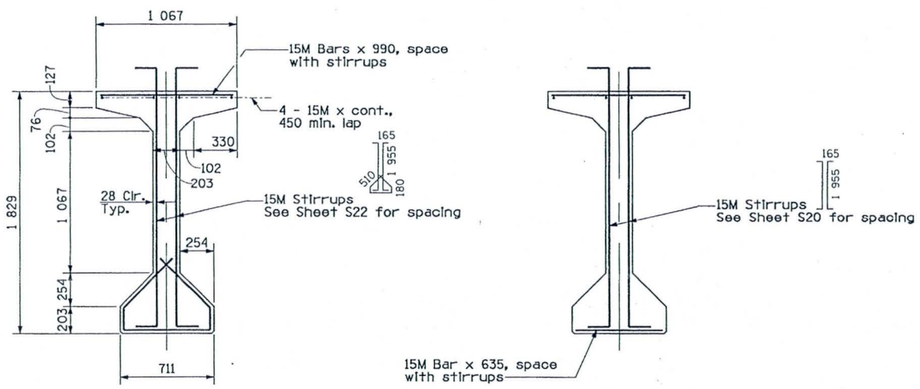

NEAR SUPPORT
Scale 1:20

NEAR MIDSPAN
Scale 1:20

TYPICAL GIRDER SECTIONS
Scale 1:20

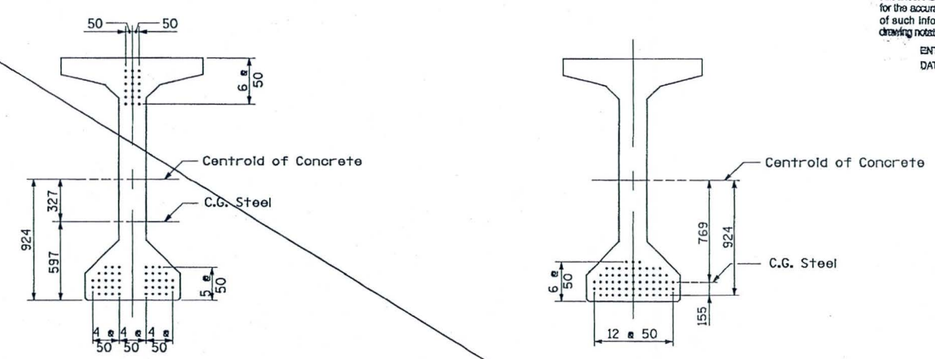

AT ENDS
Scale 1:20

AT MIDSPAN
Scale 1:20

PRESTRESSING STRAND PATTERNS
Scale 1:20
(60 Strands Required)

SEE SHEET S19A

NO.	REVISION	BY	DATE
1			
2			
3			

MARICOPA COUNTY
DEPARTMENT OF TRANSPORTATION
ENGINEERING DIVISION

116TH AVENUE BRIDGE
OVER GILA RIVER

	BY	DATE
DESIGNED	V. WISMER	11/94
DRAWN	J. GILMORE	11/94
CHECKED	V. WISMER	6/95

HOFFMAN-MILLER ENGINEERS, INC.
PHOENIX ARIZONA

GIRDER DETAILS - 1

SHEET OF
S19 S29

TRACS NO. SS3450IC

FILE NAME = MB.DGN 12/02/94

F.W.H.A. REGION	STATE	PROJECT NO.	SHEET NO.	TOTAL SHEETS	RECORD DRAWING
9	AZ.	STP-MMA-0(181)P	51A		

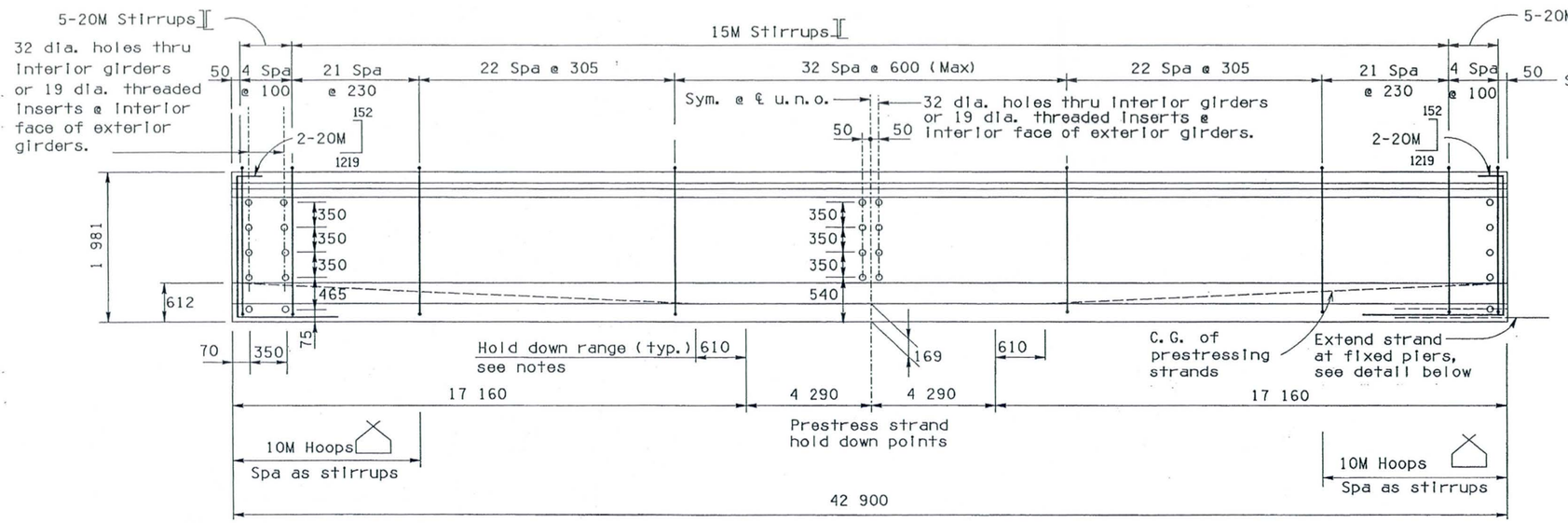

NON-STD. TYPE VI AASHTO GIRDER ELEVATION

No Scale

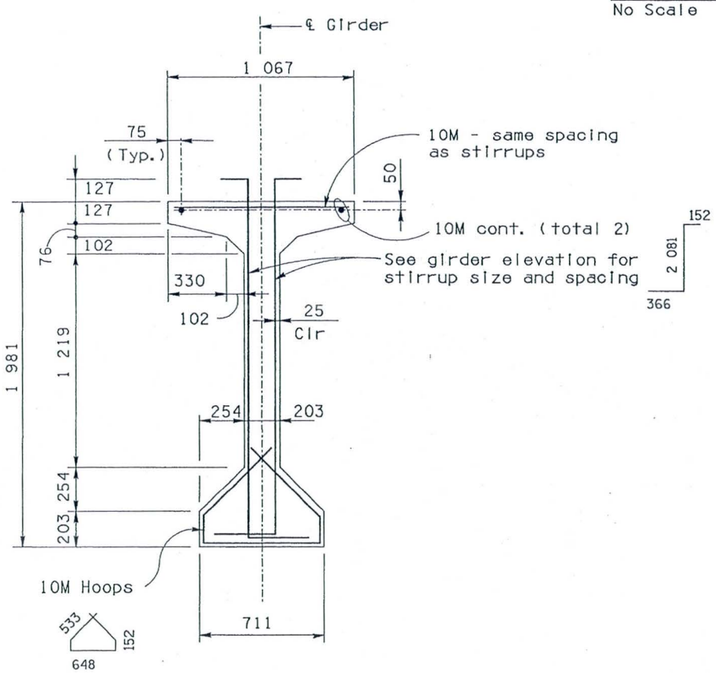

NON-STD. TYPE VI AASHTO GIRDER SECTION

No Scale

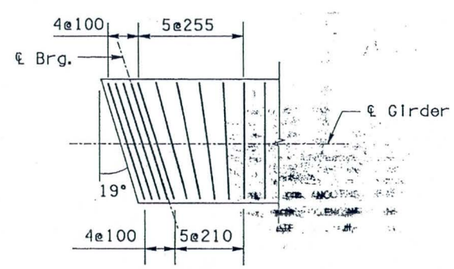

STIRRUP SPACING AT ENDS

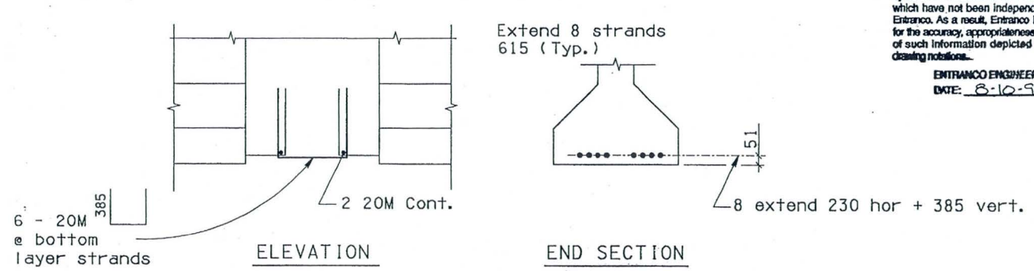

ELEVATION

END SECTION

END OF GIRDER DETAIL AT FIXED PIERS

No Scale

PRESTRESSED " I" GIRDER NOTES

Non-standard type VI AASHTO girders typical.

Concrete Strength:

f'c = 45 MPa min concrete strength @ 28 days.

f'ci = minimum compressive strength of concrete at time of initial prestressing = 35.2 MPa.

Prestressing Force:

Initial force Pi = initial force per girder at release = 9 594kN.

Working force Pw = total force remaining per girder after losses = 6 982 kN.

Strand:

13.2mm Φ ASTM A416 Type 1862 7-wire low relaxation Prestressing strand with initial strand tension equal to 147.6 kN (0.75 f's), f's = 1862 MPa.
Nominal steel area of strand = 106 sq. mm
Breaking strength of strand = 200 kN.
Use of masked strands will not be allowed.
The minimum spacing for strands is 50mm on centers.

Prestressing:

All girders shall be prestressed by the pretensioning method only. Top of girders shall be roughened transversely with a roughness amplitude of 6mm. Extend the prestressing strand beyond the end of girders at fixed pier ends as shown. Cut all other strands flush and protect exposed steel at cut ends with asphalt coating.

Girder Lengths

Girder length shown does not include elastic shortening effects. Casting length shall be increased as necessary to account for shortening effects.

RECORD DRAWING

RECORD DRAWING NOTATIONS

These record drawings reflect certain dimensions, details, specifications, and plan revisions prepared by others or obtained from other record drawings which have not been independently verified by Entranco. As a result, Entranco is not responsible for the accuracy, appropriateness or completeness of such information depicted in these record drawing notations.

ENTRANCO ENGINEERS, INC.
DATE: 8-10-99

TO ACCOMPANY CICOP #1

This Sheet to Replace Sheet S19

NO.	REVISION	BY	DATE
1	Revised per Value Engineering	DH	12/18/97
2			
3			

MARICOPA COUNTY
DEPARTMENT OF TRANSPORTATION
ENGINEERING DIVISION

116TH AVENUE BRIDGE
OVER GILA RIVER

	BY	DATE
DESIGNED	DNH	12/97
DRAWN	AJM	12/97
CHECKED	CGP	12/97

TY·LIN INTERNATIONAL
Civil and Structural Engineers
TEMPE ARIZONA

GIRDER DETAILS - 1

SHEET OF S19A

TRACS NO. SS3450IC

C:/BRIDGES/116AVE/MCDOTGD1.DGN 12/18/97

F.H.W.A. REGION	STATE	PROJECT NO.	SHEET NO.	TOTAL SHEETS	RECORD DRAWING
9	AZ.	STP-MMA-0(18)P	52	68	

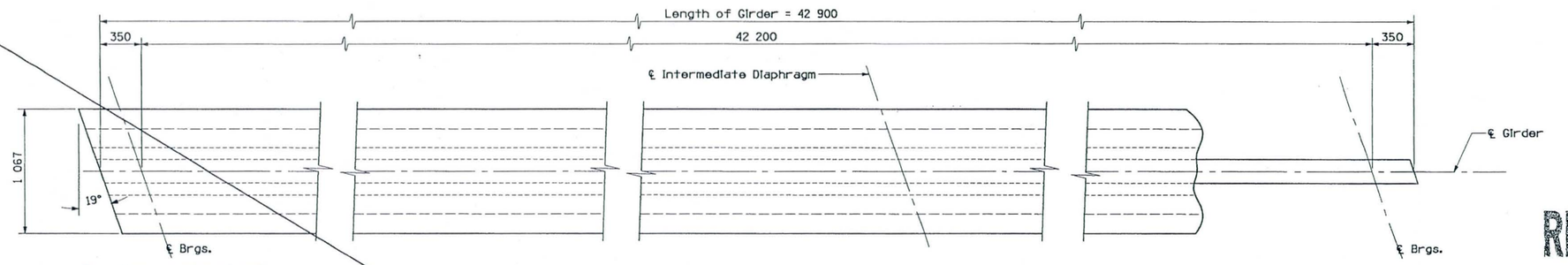

PLAN
Scale 1:20

RECORD DRAWING

RECORD DRAWING NOTATIONS

These record drawings reflect certain dimensions, details, specifications, and plan revisions prepared by others or obtained from other record drawings which have not been independently verified by Entranco. As a result, Entranco is not responsible for the accuracy, appropriateness or completeness of such information depicted in these record drawing notations.

ENTRANCO ENGINEERS, INC.
DATE: 8-10-99

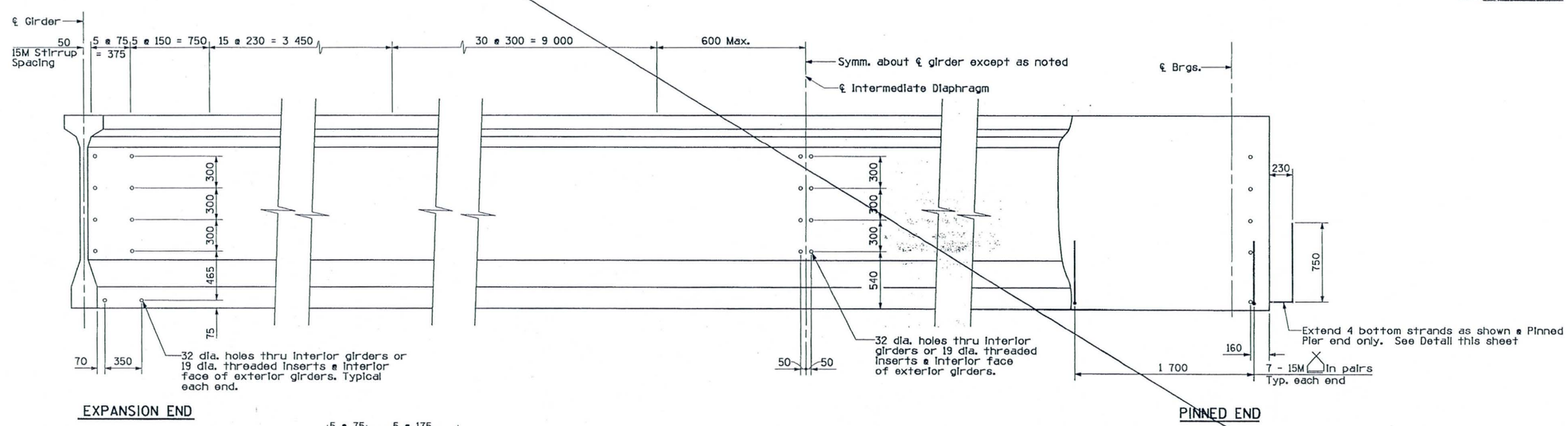

ELEVATION
Scale 1:20

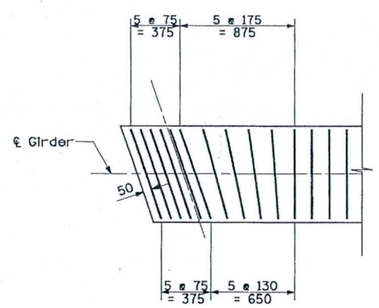

DETAIL A

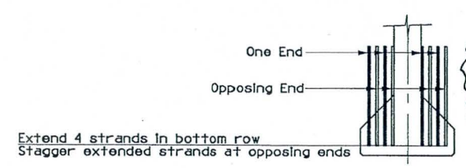

STRAND EXTENSION DETAIL

SEE SHEET S20A

NO.	REVISION	BY	DATE
1			
2			
3			

MARICOPA COUNTY
DEPARTMENT OF TRANSPORTATION
ENGINEERING DIVISION

116TH AVENUE BRIDGE
OVER GILA RIVER

	BY	DATE
DESIGNED	B. YACH	11/94
DRAWN	J. GILMORE	11/94
CHECKED	V. WISMER	6/95

HOFFMAN-MILLER ENGINEERS, INC.
PHOENIX ARIZONA

GIRDER DETAILS - 2

SHEET OF
S20 S29

TRACS NO. SS3450IC

FILE
FILE NAME
MB.DGN 12/02/94

F.W.H.A. REGION	STATE	PROJECT NO.	SHEET NO.	TOTAL SHEETS	RECORD DRAWING
9	AZ.	STP-MMA-0(18)P	52A		

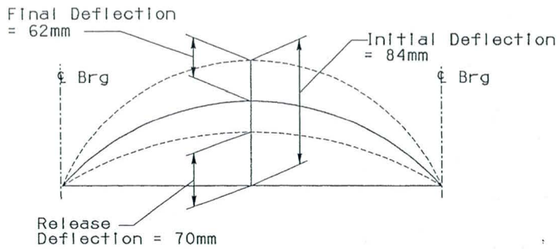

DEFLECTION DIAGRAM

No Scale

DEFLECTION NOTES:

1. Release Deflection equals the deflection that the prestressed girder undergoes at the time of strand release. The Release Deflection includes the dead load of the girder and the release prestressing force (including the effects of elastic shortening).
2. Initial Deflection equals the deflection that the prestressed girder undergoes at the time of erection prior to the diaphragm or deck pours. The Initial Deflection includes the deflection due to dead load of the girder, the initial prestressing and the effects of creep up to the time of erection. (Assumed at 60 days after release).
3. Final Deflection equals the deflection due to the dead load of the deck slab, diaphragms, and barriers.

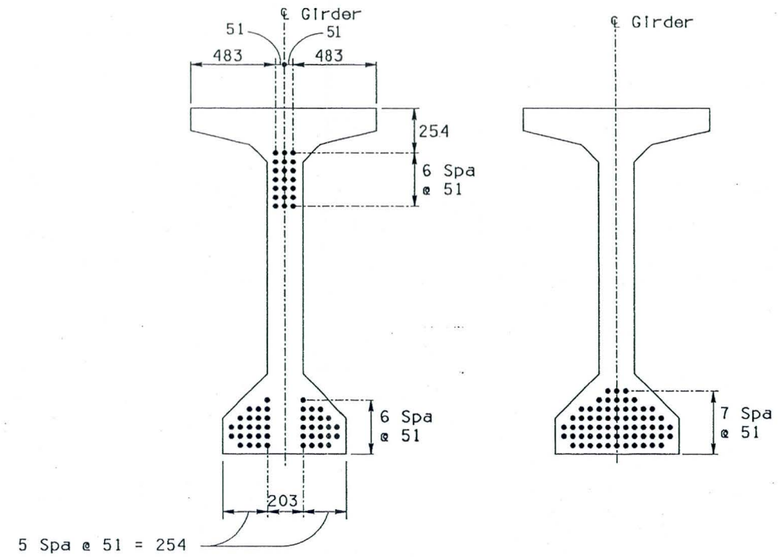

ENDS

(Ye = 612mm)

MIDSPAN

(Y℄ = 169mm)

STRAND PATTERN

Girder Depth = 1 981mm

65

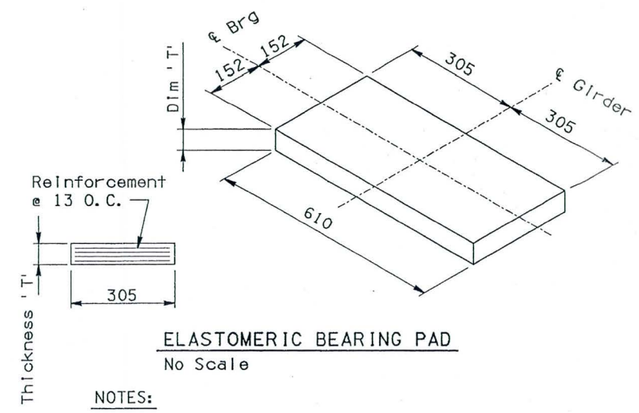

ELASTOMERIC BEARING PAD

No Scale

NOTES:

1. Elastomeric bearing pad shall be 100% virgin chloroprene and conform to AASHTO material specifications M251 with durometer hardness of 55 +/- 5.
2. Elastomeric bearing pad shall be reinforced with steel reinforcement.

BEARING SCHEDULE

LOCATION	TYPE	ELASTOMERIC PAD 'T' (mm)
Abt. 1	Expansion	100
Pier 1,2	Pinned	75
Pier 3,7,11,15	Expansion	100
Pier 4,5,6	Pinned	50
Pier 8,9,10	Pinned	50
Pier 12,13,14	Pinned	50
Pier 16,17	Pinned	75
Abt. 2	Expansion	100

ELASTOMERIC BEARING PAD CRITERIA

DESIGN METHOD A
ELASTOMERIC GRADE 0
130 PSI SHEAR MODULUS

RECORD DRAWING

RECORD DRAWING NOTATIONS

These record drawings reflect certain dimensions, details, specifications, and plan revisions prepared by others or obtained from other record drawings which have not been independently verified by Entranco. As a result, Entranco is not responsible for the accuracy, appropriateness or completeness of such information depicted in these record drawing notations.

ENTRANCO ENGINEERS, INC.
DATE: 8-19-99

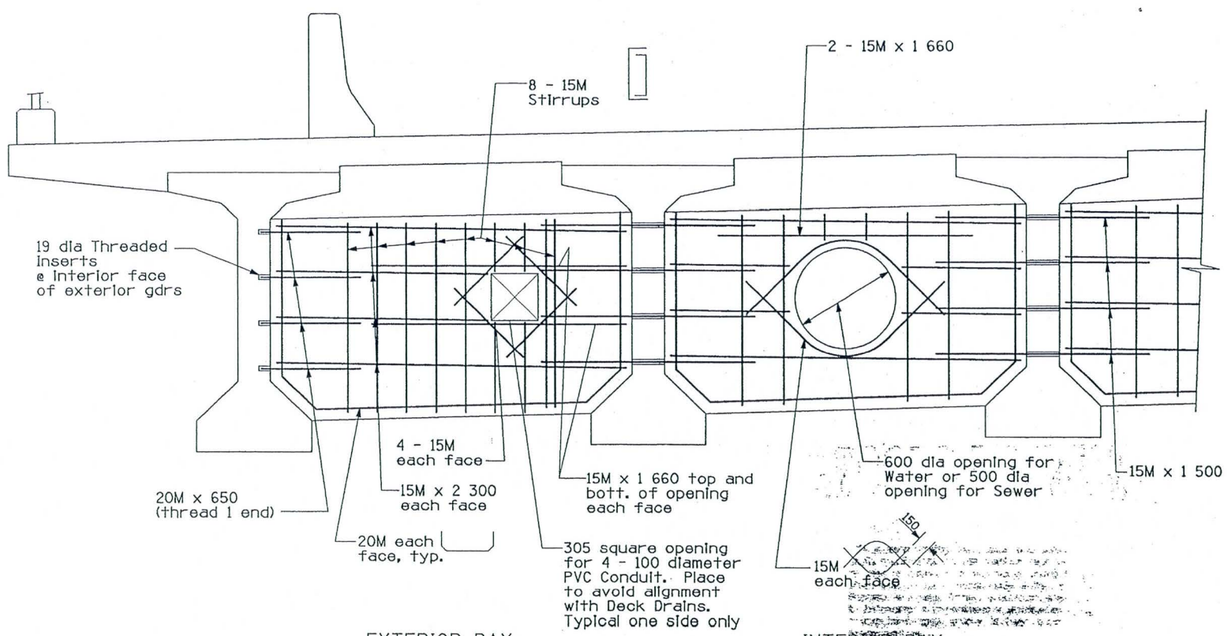

INTERMEDIATE DIAPHRAGM

No Scale

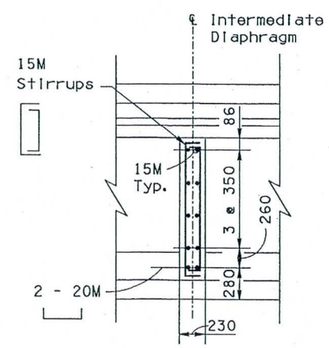

INTERMEDIATE DIAPHRAGM

No Scale

TO ACCOMPANY CICOP #1

⚠1 This Sheet To Replace Sheet S20

NO.	REVISION	BY	DATE
⚠1	Revised per Value Engineering	DH	12/97
⚠2			
⚠3			

MARICOPA COUNTY
DEPARTMENT OF TRANSPORTATION
ENGINEERING DIVISION

116TH AVENUE BRIDGE
OVER GILA RIVER

	BY	DATE
DESIGNED	DNH	12/97
DRAWN	AJM	12/97
CHECKED	CGP	12/97

TY-LIN INTERNATIONAL
Civil and Structural Engineers
TEMPE ARIZONA

GIRDER DETAILS - 2

SHEET OF S20A

TRACS NO. SS34501C

C:/BRIDGES/116AVE/MCDOTGD2.DGN 12/18/97

F.H.W.A. REGION	STATE	PROJECT NO.	SHEET NO.	TOTAL SHEETS	RECORD DRAWING
9	AZ.	STP-MMA-0(18)P	53	68	

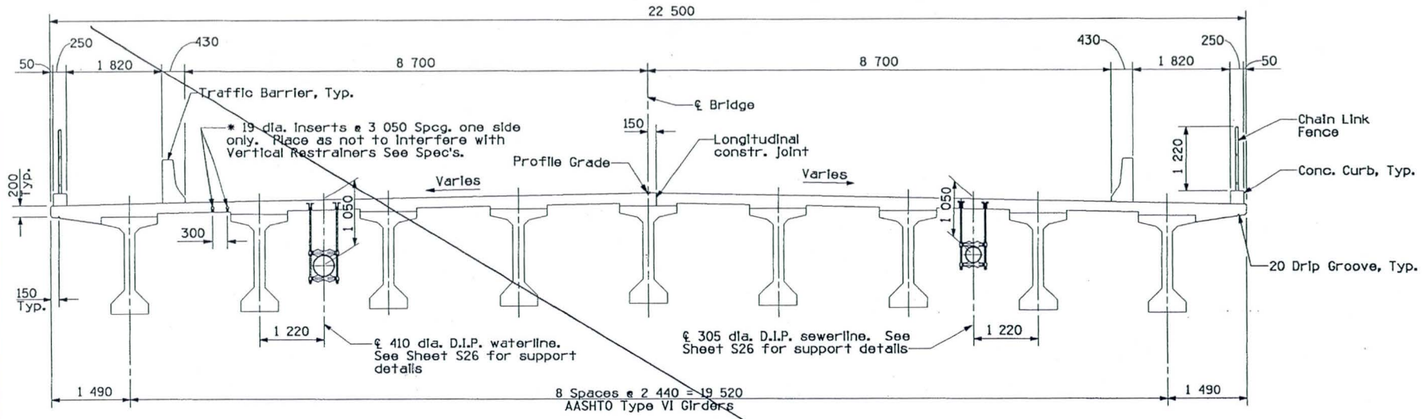

TYPICAL DECK SECTION
Scale 1:50

* NOTE:
Contractor to verify with US West and Cox Communications; the location and size of inserts.

NOTE:

The "Theoretical Elevation of the Top of Erected Girder" includes an allowance for deflection of the girder due to its own weight. The actual top of erected girder elevations shall be checked in the field. If the measured elevations are lower than the theoretical elevations, the difference shall be added to the build-up. If the measured elevations are higher, the difference shall be subtracted from the build-up.

The "Screed Elevation" includes an allowance for the dead load of the concrete deck and shall be used as shown regardless of the measured top of erected girder elevations.

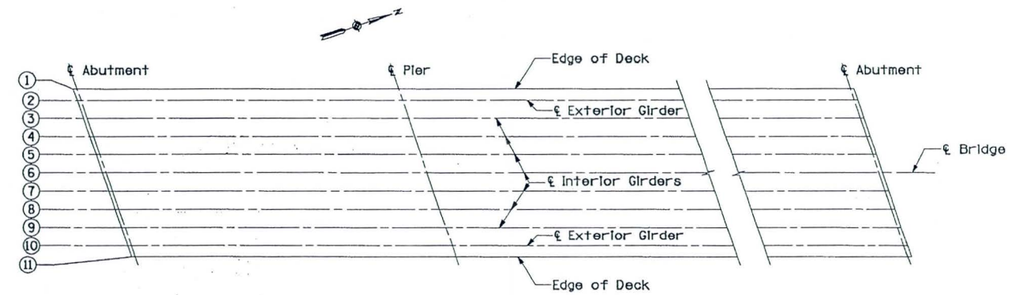

PLAN
N.T.S.

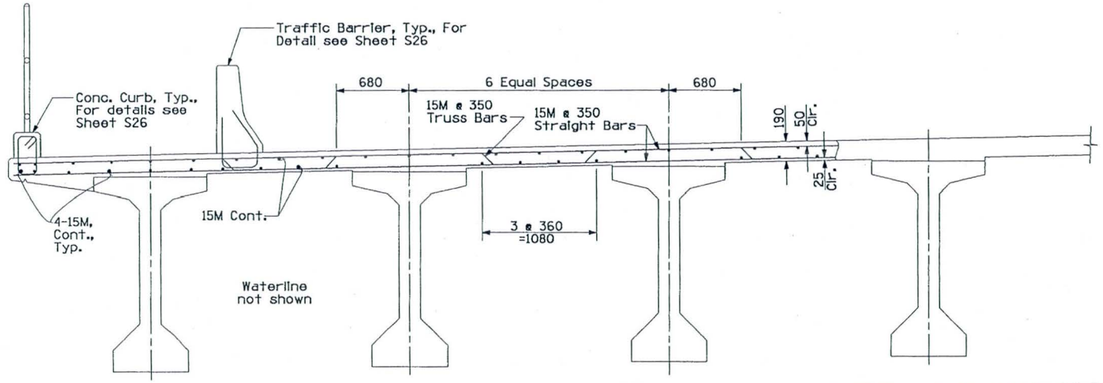

PARTIAL DECK SECTION
Scale 1:25

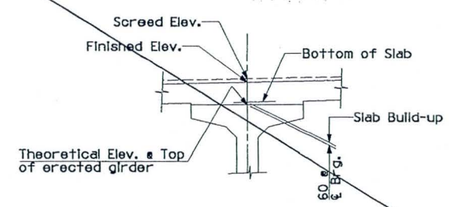

SLAB BUILD-UP DETAILS
N.T.S.

Line No.	Distance from ℄ Bearings	Theoretical Elevation of the Top of Erected Girder	Finished Elevation	Screed Elevation	Build-up
This data may be obtained from the Engineer upon request.					

Camber @ Erection @ ℄ span = 80
D. L. Deflection @ ℄ span = 55
V. C. Ordinate @ ℄ span = 240

SEE SHEET S21A

RECORD DRAWING

RECORD DRAWING NOTATIONS

These record drawings reflect certain dimensions, details, specifications, and plan revisions prepared by others or obtained from other record drawings which have not been independently verified by Entranco. As a result, Entranco is not responsible for the accuracy, appropriateness or completeness of such information depicted in these record drawing notations.

ENTRANCO ENGINEERS, INC.
DATE: 8-16-99

NOTES:

1. Transverse reinforcement shall be placed parallel to the skew.
2. Transverse reinforcement splices shall be as follows:

   Top bars 450 mm min. lap midway between girders.
   Bottom bars 450 mm min. lap at ℄ of girders.
   Stagger all transverse rebar splices.

3. See Sheets S25 and S29 for additional deck reinforcement.

NO.	REVISION	BY	DATE
1			
2			
3			

MARICOPA COUNTY
DEPARTMENT OF TRANSPORTATION
ENGINEERING DIVISION

116TH AVENUE BRIDGE
OVER GILA RIVER

	BY	DATE
DESIGNED	B. YACH	11/94
DRAWN	J. GILMORE	11/94
CHECKED	V. WISMER	6/95

Registered Professional Engineer (Civil) CERTIFICATE NO. 16423 DONALD R. DAVIS Date Signed 8-16-99 ARIZONA, U.S.A.

HOFFMAN-MILLER ENGINEERS, INC.
PHOENIX ARIZONA

DECK DETAILS - 1

SHEET OF S21 S29

TRACS NO. SS3450IC

FILE NAME
MB.DGN 12/02/94

I.W.I.A. REGION	STATE	PROJECT NO.	SHEET NO.	TOTAL SHEETS	RECORD DRAWING
9	AZ.	STP-MMA-0(18)P	53A		

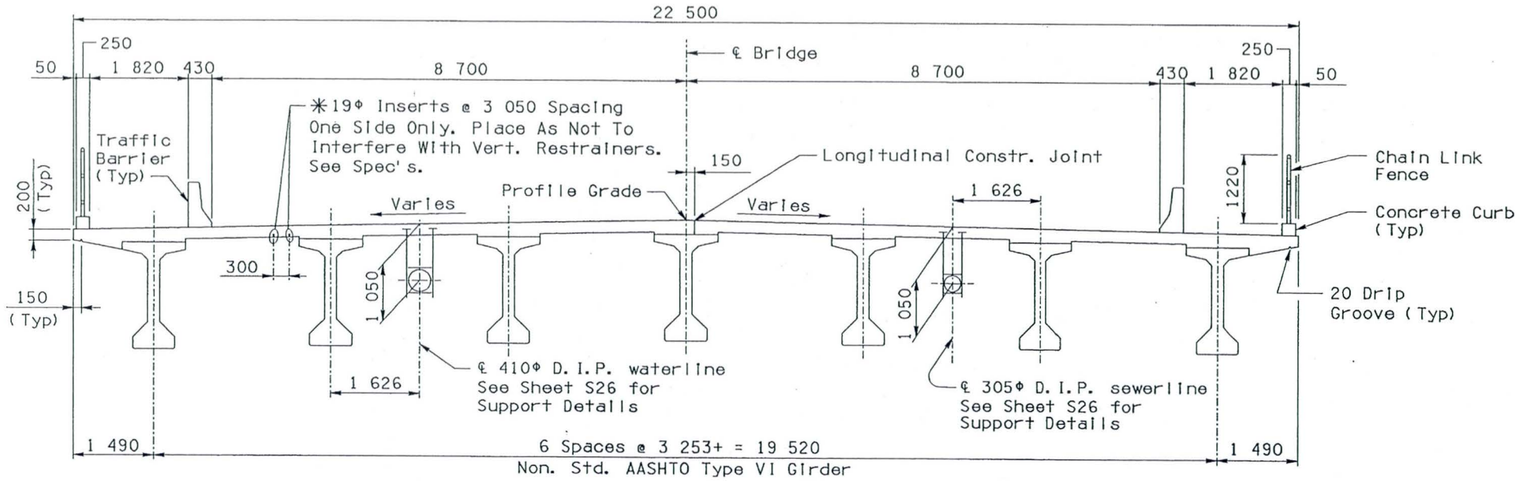

Note:

✳ Contractor to verify with US West & Cox Communications the location & size of Inserts.

TYPICAL DECK SECTION

Scale: 1:50

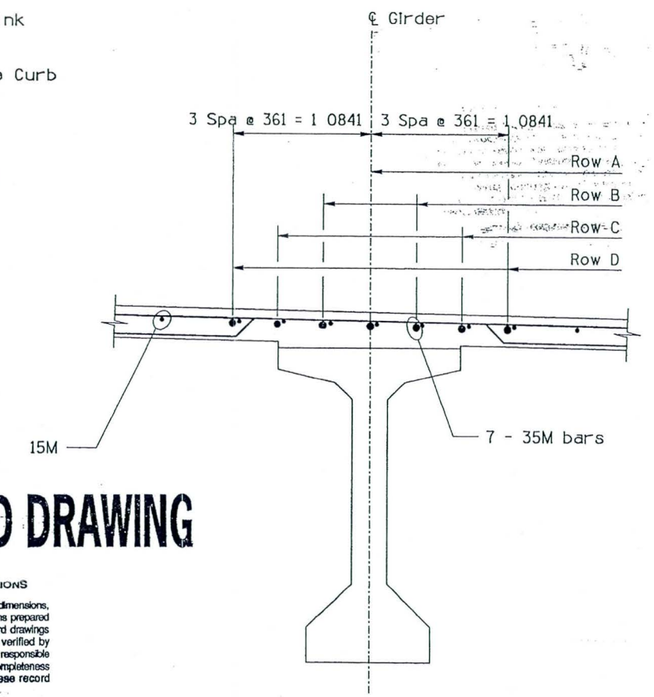

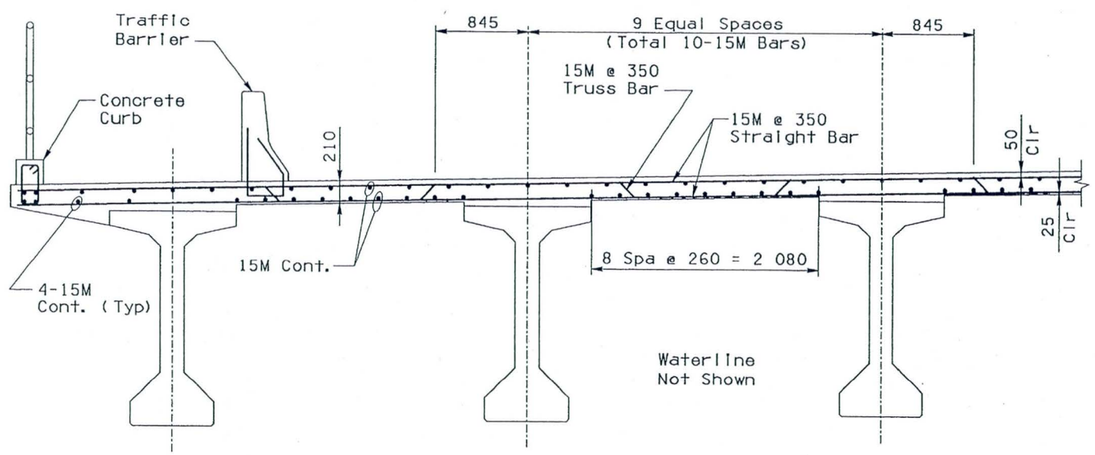

PARTIAL DECK DETAIL

Scale: 1:25

RECORD DRAWING

RECORD DRAWING NOTATIONS

These record drawings reflect certain dimensions, details, specifications, and plan revisions prepared by others or obtained from other record drawings which have not been independently verified by Entranco. As a result, Entranco is not responsible for the accuracy, appropriateness or completeness of such information depicted in these record drawing notations.

ENTRANCO ENGINEERS, INC.
DATE: 8-10-99

CONTINUITY REINFORCEMENT AT PINNED PIERS -

3 SPAN AND 4 SPAN UNITS

N. T. S.

NOTES:

1. Transverse reinforcement shall be placed parallel to the skew.
2. Transverse reinforcement splices shall be as follows:
   Top bars 450mm min. lap midway between girders.
   Bottom bars 450mm min. lap at ℄ of girders.
   Stagger all transverse rebar splices.

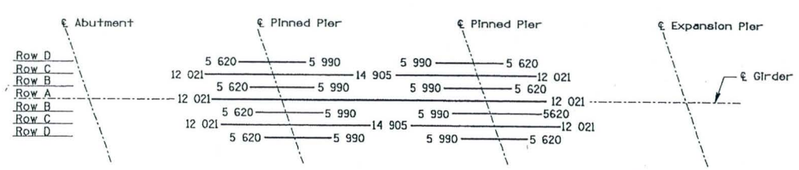

Notes:

1. All bars are 35M.
2. Provide 2 180 splices.

CONTINUITY REINFORCEMENT LAYOUT - 3 SPAN UNIT

No Scale

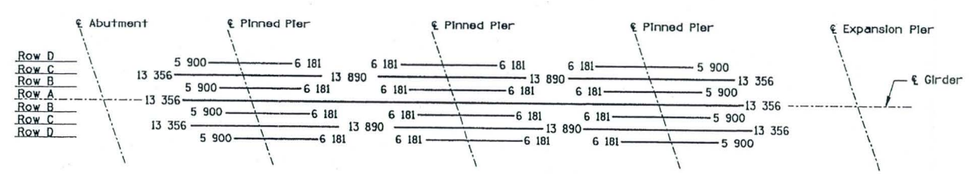

Notes:

1. All bars are 35M.
2. Provide 2 180 splices.

CONTINUITY REINFORCEMENT LAYOUT - 4 SPAN UNIT

No Scale

TO ACCOMPANY CICOP #1

⚠ This Sheet to Replace Sheet S21

NO.	REVISION	BY	DATE
1	Revised per Value Engineering	DH	12/97
2			
3			

MARICOPA COUNTY
DEPARTMENT OF TRANSPORTATION
ENGINEERING DIVISION

116TH AVENUE BRIDGE
OVER GILA RIVER

	BY	DATE
DESIGNED	D.N.H.	12/97
DRAWN	A.J.M.	12/97
CHECKED	C.L.M.	12/97

T·Y·LIN INTERNATIONAL
Civil and Structural Engineers
TEMPE ARIZONA

DECK DETAILS - 1

SHEET OF S21A

TRACS NO. SS34501C

C:\BRIDGES\116AVE\DECK.DGN 12/18/97

F.H.W.A. REGION	STATE	PROJECT NO.	SHEET NO.	TOTAL SHEETS	RECORD DRAWING
9	AZ.	STP-MMA-0(18)P	54	68	

RECORD DRAWING

RECORD DRAWING NOTATIONS

These record drawings reflect certain dimensions, details, specifications, and plan revisions prepared by others or obtained from other record drawings which have not been independently verified by Entranco. As a result, Entranco is not responsible for the accuracy, appropriateness or completeness of such information depicted in these record drawing notations.

ENTRANCO ENGINEERS, INC.
DATE: 8-10-99

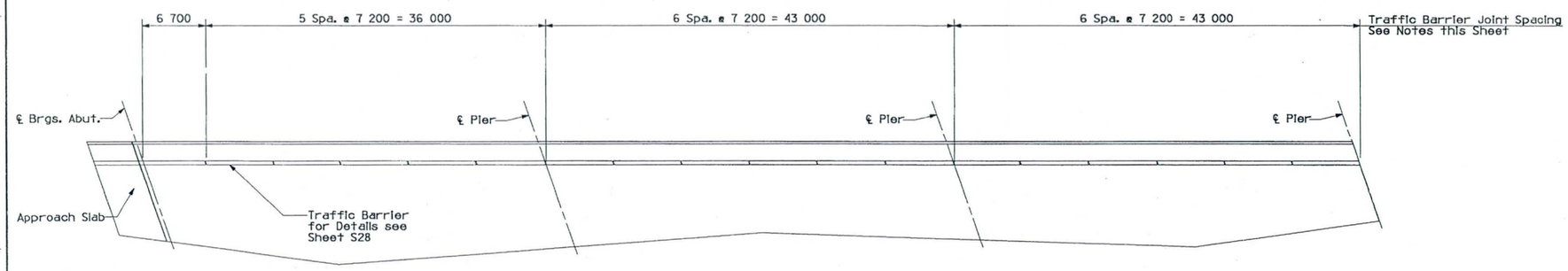

PARTIAL DECK PLAN - 3 SPAN UNIT
Scale 1:250

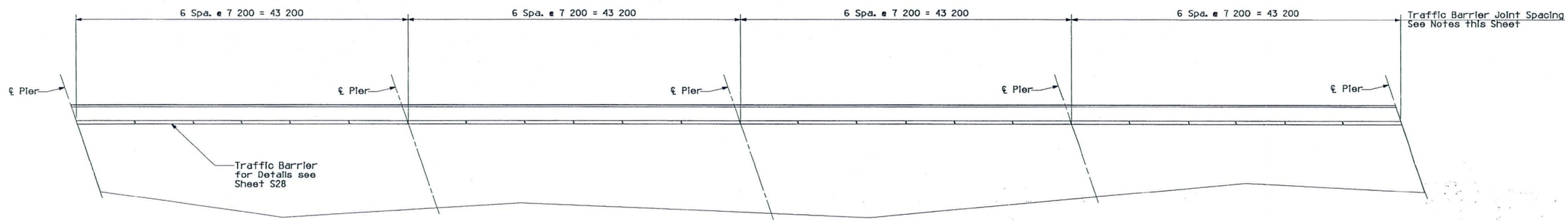

PARTIAL DECK PLAN - 4 SPAN UNIT
Scale 1:250

NOTES:

1. Provide 13 open joint in traffic barrier at all other barrier joint locations.
2. Reinforcing steel shall be discontinued thru barrier joints.

NO.	REVISION	BY	DATE
1			
2			
3			

MARICOPA COUNTY
DEPARTMENT OF TRANSPORTATION
ENGINEERING DIVISION

116TH AVENUE BRIDGE
OVER GILA RIVER

	BY	DATE
DESIGNED	V. WISMER	6/95
DRAWN	J. GILMORE	5/95
CHECKED	V. WISMER	6/95

HOFFMAN-MILLER ENGINEERS, INC.
PHOENIX ARIZONA

DECK DETAILS - 2

SHEET OF
S22 S29

TRACS NO. SS34501C

FILE NAME MB.DGN 12/02/94

F.H.W.A. REGION	STATE	PROJECT NO.	SHEET NO.	TOTAL SHEETS	RECORD DRAWING
9	AZ.	STP-MMA-0(18)P	55	68	

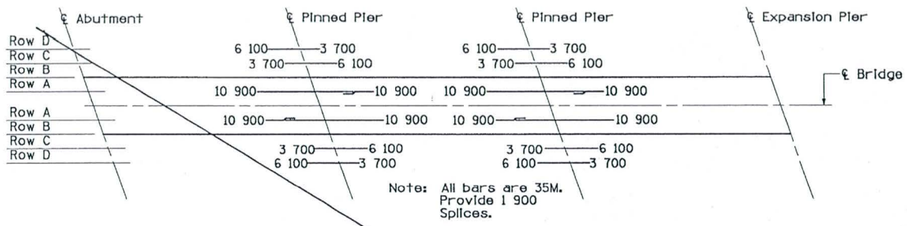

CONTINUITY REINFORCEMENT LAYOUT - 3 SPAN UNIT

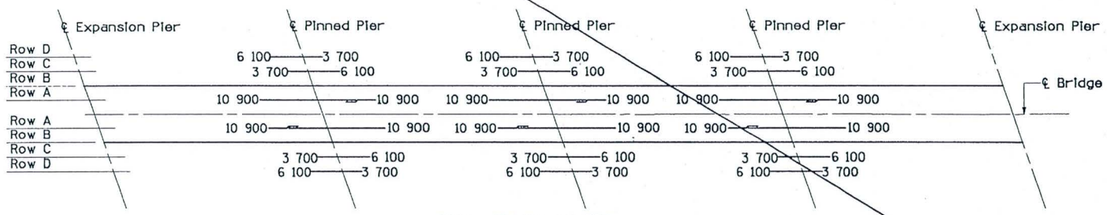

Note: All bars are 35M.
Provide 1 900
Splices.

CONTINUITY REINFORCEMENT LAYOUT - 4 SPAN UNIT

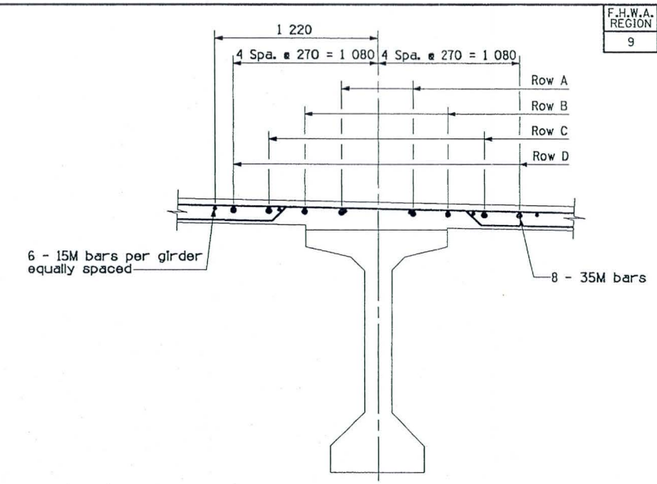

CONTINUITY REINFORCEMENT AT PINNED PIERS - 3 SPAN AND 4 SPAN UNITS
Scale 1:20

RECORD DRAWING

RECORD DRAWING NOTATIONS

These record drawings reflect certain dimensions, details, specifications, and plan revisions prepared by others or obtained from other record drawings which have not been independently verified by Entranco. As a result, Entranco is not responsible for the accuracy, appropriateness or completeness of such information depicted in these record drawing notations.

ENTRANCO ENGINEERS, INC.
DATE: 8-10-99

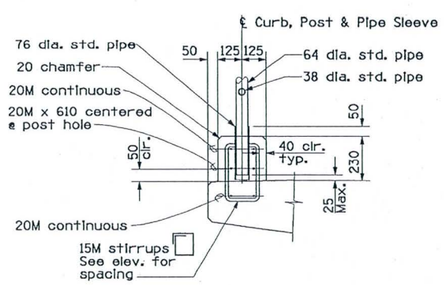

TYPICAL CURB DETAIL
N. T. S.

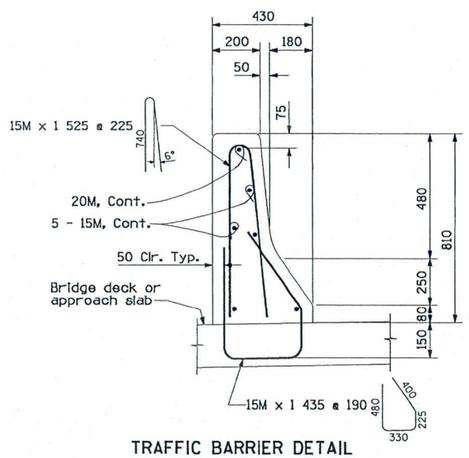

TRAFFIC BARRIER DETAIL
N. T. S.

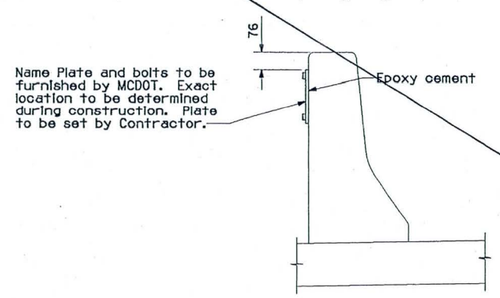

NAME PLATE DETAIL
N. T. S.

SEE
SHEET S23A

NO.	REVISION	BY	DATE
1			
2			
3			

MARICOPA COUNTY
DEPARTMENT OF TRANSPORTATION
ENGINEERING DIVISION

116TH AVENUE BRIDGE
OVER GILA RIVER

	BY	DATE
DESIGNED	V. WISMER	6/95
DRAWN	J. DILMORE	6/95
CHECKED	V. WISMER	6/95

Registered Professional Engineer (Civil) CERTIFICATE NO. 18423 DONALD R. DAVIS Date Signed 8/10/99 ARIZONA, U.S.A.

HOFFMAN-MILLER ENGINEERS, INC.
PHOENIX ARIZONA

DECK DETAILS - 3

SHEET OF
S23 S29

TRACS NO. SS34501C

FILE
DATE 12/02/94
USER
MB LOGN

F.H.W.A. REGION	STATE	PROJECT NO.	SHEET NO.	TOTAL SHEETS	RECORD DRAWING
9	AZ.	STP-MMA-0(18)P	55A		

RECORD DRAWING

RECORD DRAWING NOTATIONS

These record drawings reflect certain dimensions, details, specifications, and plan revisions prepared by others or obtained from other record drawings which have not been independently verified by Entranco. As a result, Entranco is not responsible for the accuracy, appropriateness or completeness of such information depicted in these record drawing notations.

ENTRANCO ENGINEERS, INC.
DATE: 8-10-99

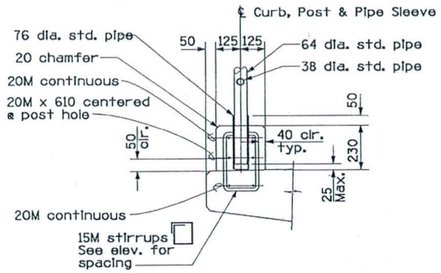

TYPICAL CURB DETAIL
N. T. S.

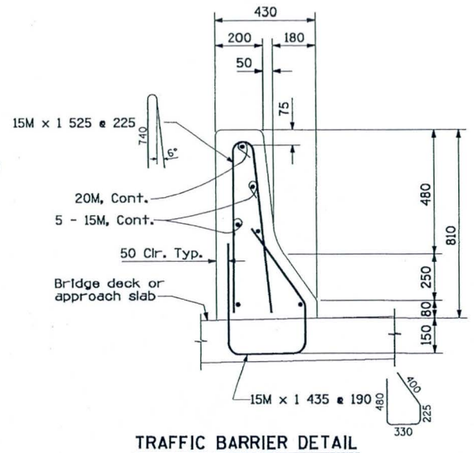

TRAFFIC BARRIER DETAIL
N. T. S.

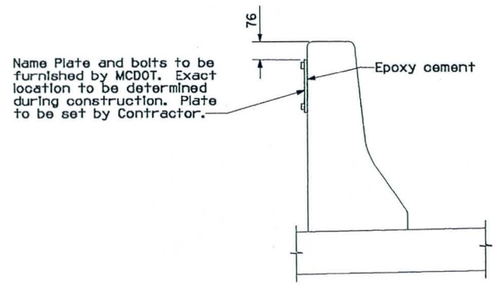

NAME PLATE DETAIL
N. T. S.

RECORD DRAWING

TO ACCOMPANY CICOP #1

This Sheet to Replace Sheet S23.

NO.	REVISION	BY	DATE
1	Revised per Value Engineering	JG	12/97
2			
3			

MARICOPA COUNTY
DEPARTMENT OF TRANSPORTATION
ENGINEERING DIVISION

116TH AVENUE BRIDGE
OVER GILA RIVER

	BY	DATE
DESIGNED	V. WISMER	6/95
DRAWN	J. GILMORE	6/95
CHECKED	V. WISMER	6/95

HOFFMAN-MILLER ENGINEERS, INC.
PHOENIX ARIZONA

DECK DETAILS - 3

SHEET OF S23A

TRACS NO. SS3450IC

$FILE$
$DATE$
$TIME$
MB.DGN 12/02/94

F.H.W.A. REGION	STATE	PROJECT NO.	SHEET NO.	TOTAL SHEETS	RECORD DRAWING
9	AZ.	STP-MMA-0(18)P	56	68	

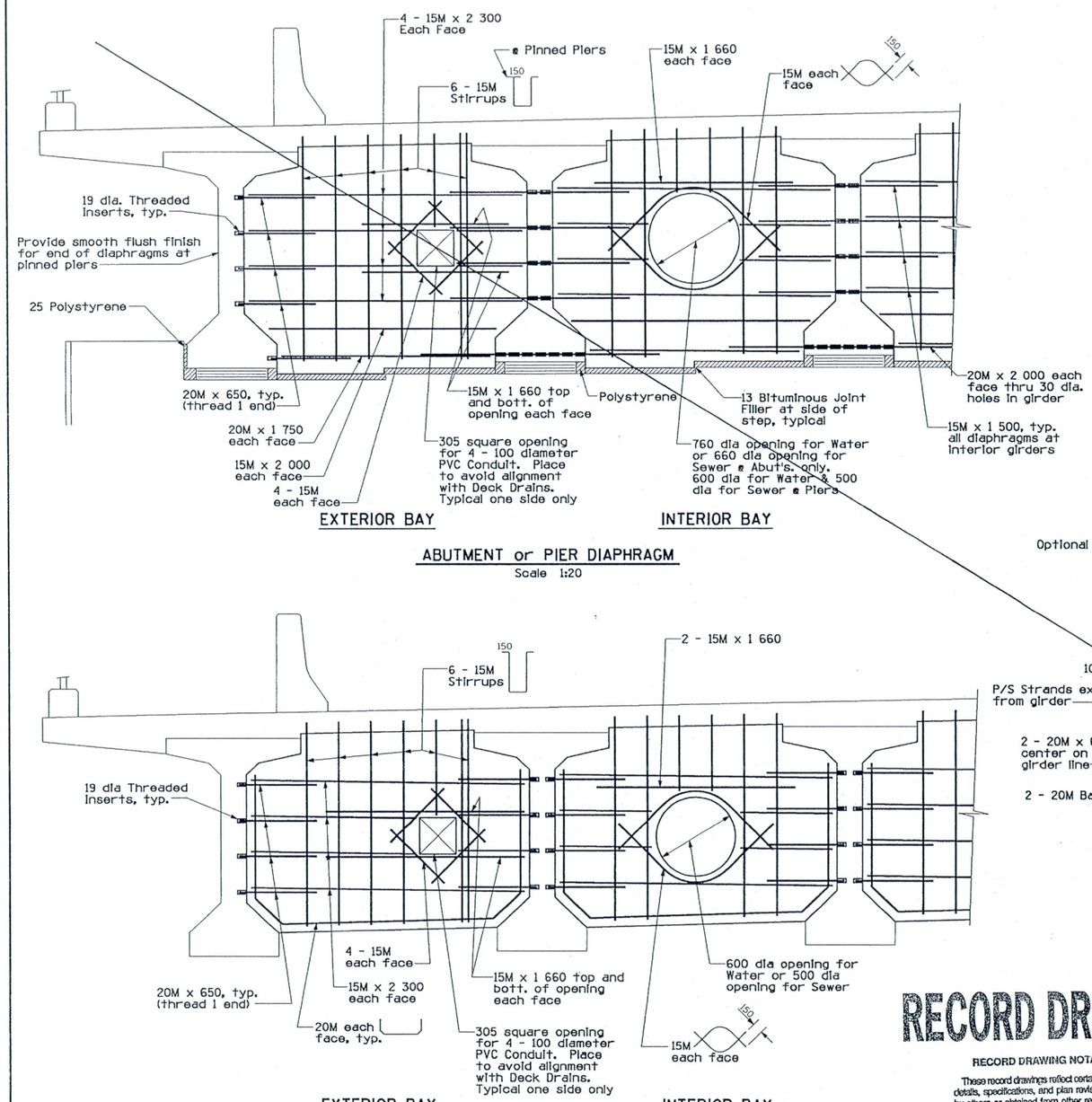

ABUTMENT or PIER DIAPHRAGM
Scale 1:20

INTERMEDIATE DIAPHRAGM
Scale 1:20

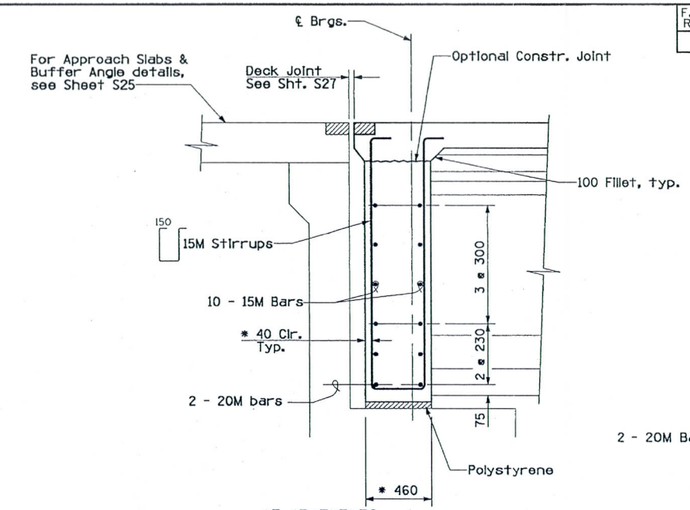

AT ABUTMENTS

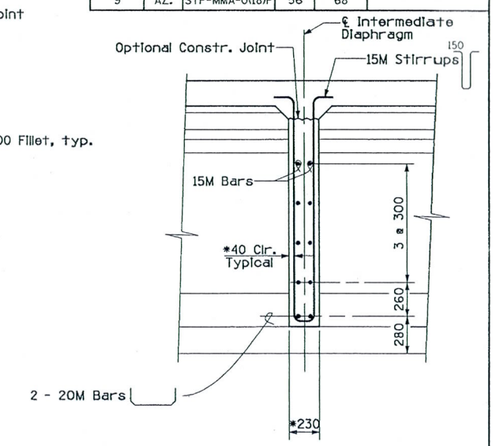

AT INTERMEDIATE DIAPHRAGMS

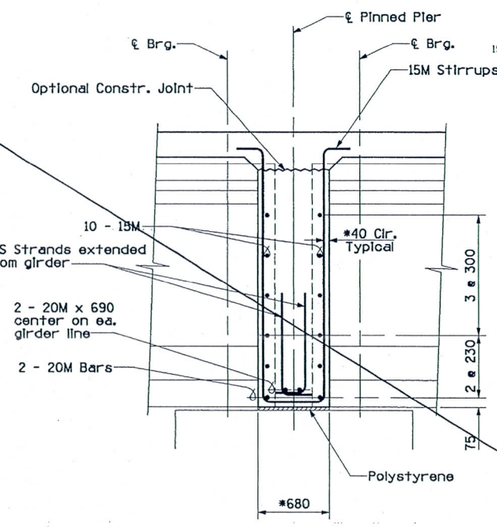

AT PINNED PIERS

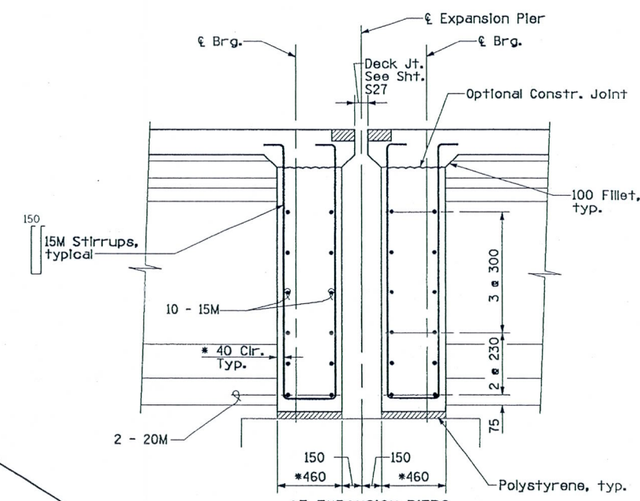

AT EXPANSION PIERS

TYPICAL DIAPHRAGM SECTIONS
Scale 1:20
* Measured Perpendicular to ℄ Bearing

SEE
SHEET S24A

RECORD DRAWING

RECORD DRAWING NOTATIONS

These record drawings reflect certain dimensions, details, specifications, and plan revisions prepared by others or obtained from other record drawings which have not been independently verified by Entranco. As a result, Entranco is not responsible for the accuracy, appropriateness or completeness of such information depicted in these record drawing notations.

ENTRANCO ENGINEERS, INC.
DATE: 8-10-99

NO.	REVISION	BY	DATE
1			
2			
3			

MARICOPA COUNTY
DEPARTMENT OF TRANSPORTATION
ENGINEERING DIVISION

116TH AVENUE BRIDGE
OVER GILA RIVER

	BY	DATE
DESIGNED	V. WISMER	1/95
DRAWN	J. DILMORE	1/95
CHECKED	V. WISMER	6/95

Registered Professional Engineer (Civil) CERTIFICATE NO. 18423 DONALD R. DAVIS Date Signed 8/10/99 ARIZONA, U.S.A.

HOFFMAN-MILLER ENGINEERS, INC.
PHOENIX ARIZONA

DECK DETAILS - 4

SHEET OF
S24S29

TRACS NO. SS3450IC

$FILE$
$DATE$
$TIME$
MB.DGN 12/02/94

F.H.W.A. REGION	STATE	PROJECT NO.	SHEET NO.	TOTAL SHEETS	RECORD DRAWING
9	AZ.	STP-MMA-0(18)P	56A		

RECORD DRAWING

RECORD DRAWING NOTATIONS

These record drawings reflect certain dimensions, details, specifications, and plan revisions prepared by others or obtained from other record drawings which have not been independently verified by Entranco. As a result, Entranco is not responsible for the accuracy, appropriateness or completeness of such information depicted in these record drawing notations.

ENTRANCO ENGINEERS, INC.
DATE: 8-10-99

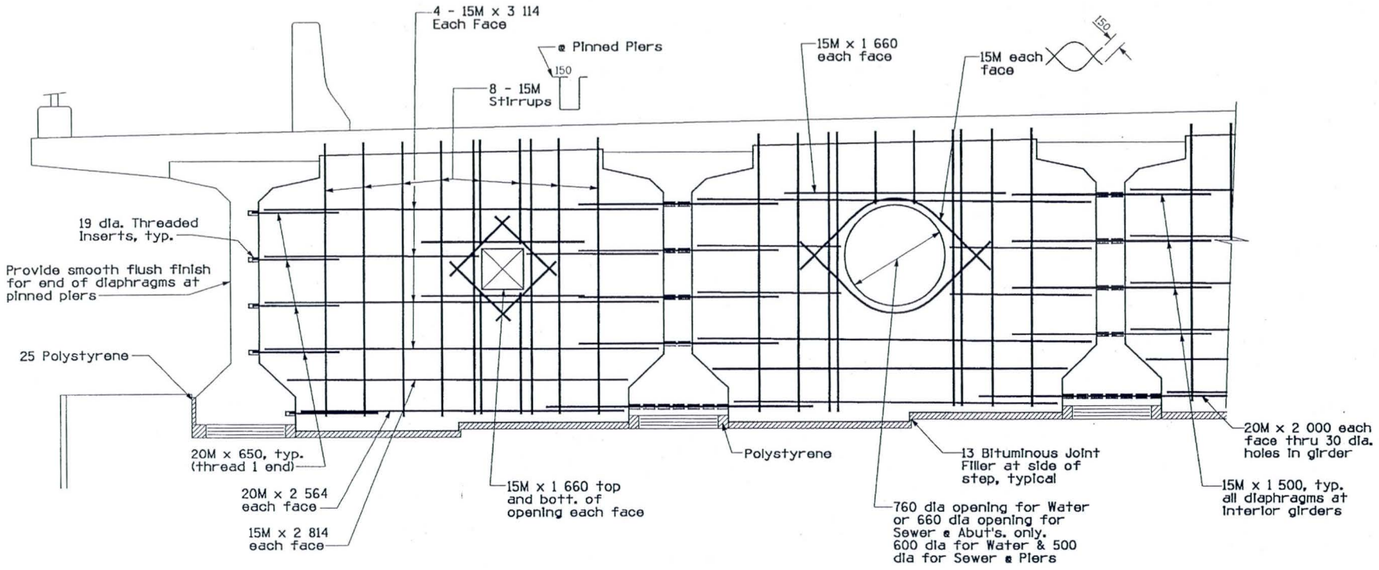

ABUTMENT or PIER DIAPHRAGM
Scale 1:20

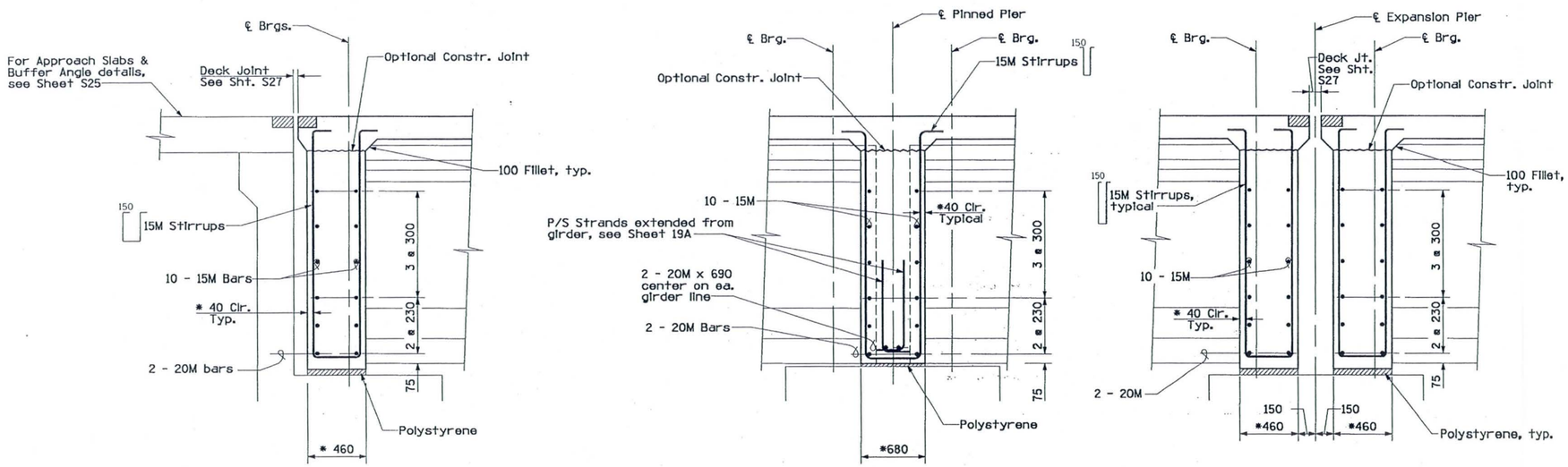

AT ABUTMENTS

AT PINNED PIERS

AT EXPANSION PIERS

TYPICAL DIAPHRAGM SECTIONS
Scale 1:20
* Measured Perpendicular to ℄ Bearing

TO ACCOMPANY CICOP #1

This Sheet to Replace Sheet S24.

NO.	REVISION	BY	DATE
1	Revised per Value Engineering	JG	12/97
2			
3			

MARICOPA COUNTY
DEPARTMENT OF TRANSPORTATION
ENGINEERING DIVISION

116TH AVENUE BRIDGE
OVER GILA RIVER

REGISTERED PROFESSIONAL ENGINEER (CIVIL) CERTIFICATE NO. 8423 DONALD R. DAVIS DATE SIGNED 12/23/97 ARIZONA, U.S.A.

	BY	DATE
DESIGNED	V. WISMER	1/95
DRAWN	J. GILMORE	1/95
CHECKED	V. WISMER	6/95

HOFFMAN-MILLER ENGINEERS, INC.
PHOENIX ARIZONA

DECK DETAILS - 4

SHEET OF S24A

TRACS NO. SS34501C

FILE
DATE
TIME
MB.DGN 12/02/94

F.H.W.A. REGION	STATE	PROJECT NO.	SHEET NO.	TOTAL SHEETS	RECORD DRAWING
9	AZ.	STP-MMA-0(18)P	57	68	

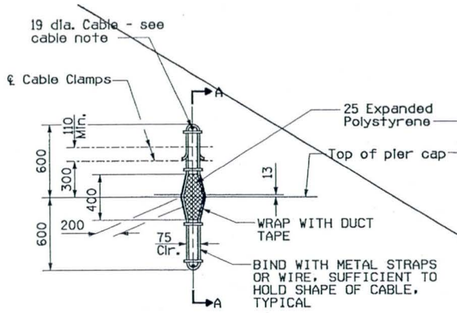

EXPANSION RESTRAINERS
(At Abutments and Expansion Piers)

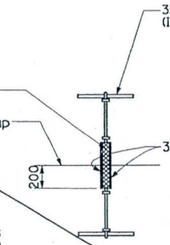

SECTION A-A

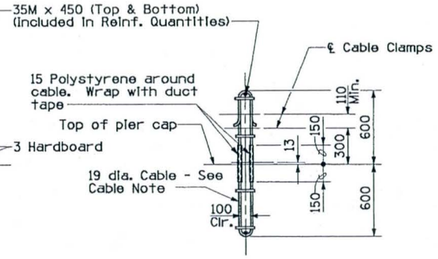

FIXED RESTRAINER
(At Pinned Piers)

CABLE NOTE:
Restrainer cables shall be 19 dia. preformed 6 x 19 (IWRC) galvanized with a minimum breaking strength of 187kN.

VERTICAL RESTRAINER DETAILS
N.T.S.

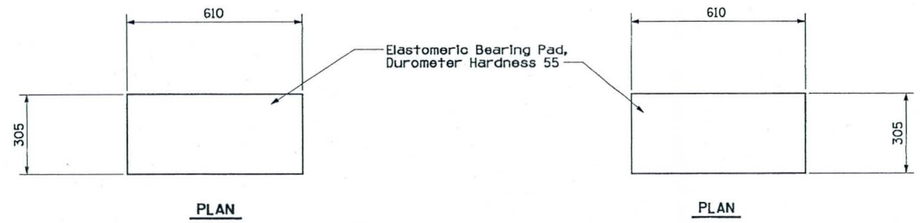

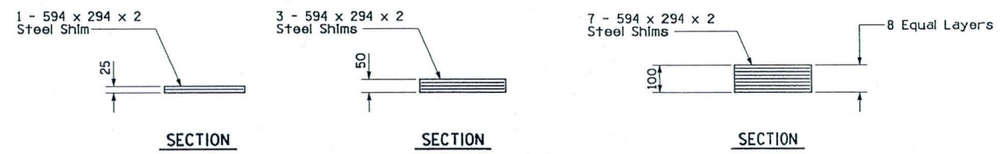

at PINNED PIERS

at ABUTMENTS AND EXPANSION PIERS

ELASTOMERIC BEARING PAD DETAILS
Scale 1:10

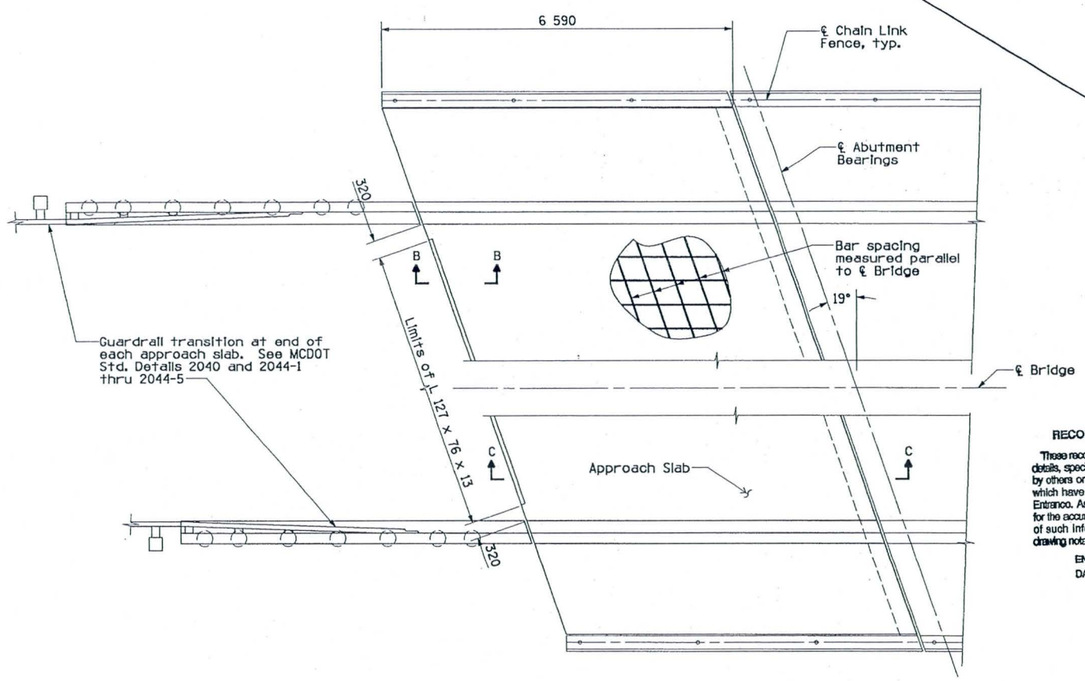

PLAN
Scale 1:50

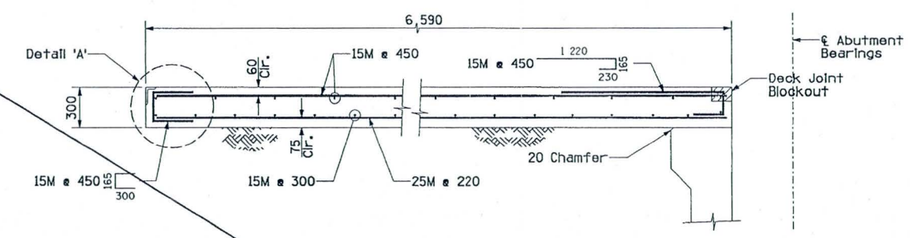

SECTION C-C
Scale 1:20

RECORD DRAWING

RECORD DRAWING NOTATIONS

These record drawings reflect certain dimensions, details, specifications, and plan revisions prepared by others or obtained from other record drawings which have not been independently verified by Entranco. As a result, Entranco is not responsible for the accuracy, appropriateness or completeness of such information depicted in these record drawing notations.

ENTRANCO ENGINEERS, INC.
DATE: 8-10-99

SEE SHEET S25A

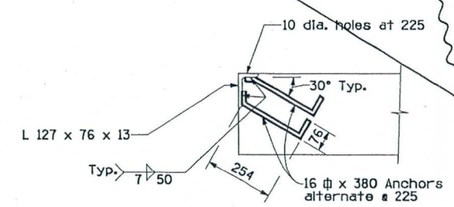

NOTE:
Omit guard angle thru sidewalks.

DETAIL A
Scale 1:10

NO.	REVISION	BY	DATE
1			
2			
3			
4			

MARICOPA COUNTY
DEPARTMENT OF TRANSPORTATION
ENGINEERING DIVISION

116TH AVENUE BRIDGE
OVER GILA RIVER

	BY	DATE
DESIGNED	Y. WISMER	6/95
DRAWN	J. GILMORE	12/94
CHECKED	V. WISMER	6/95

Registered Professional Engineer (Civil) CERTIFICATE NO. 14423 DONALD R. DAVIS Date Signed 8/10/99 ARIZONA, U.S.A.

HOFFMAN-MILLER ENGINEERS, INC.
PHOENIX ARIZONA

MISCELLANEOUS DETAILS - 1

SHEET OF S25 S29

TRACS NO. SS34501C

$FILE$
$DATE$
$TIME$
MB.DGN 12/02/94

F.H.W.A. REGION	STATE	PROJECT NO.	SHEET NO.	TOTAL SHEETS	RECORD DRAWING
9	AZ.	STP-MMA-0(18)P	57A		

RECORD DRAWING

RECORD DRAWING NOTATIONS

These record drawings reflect certain dimensions, details, specifications, and plan revisions prepared by others or obtained from other record drawings which have not been independently verified by Entranco. As a result, Entranco is not responsible for the accuracy, appropriateness or completeness of such information depicted in these record drawing notations.

ENTRANCO ENGINEERS, INC.
DATE: 8-10-99

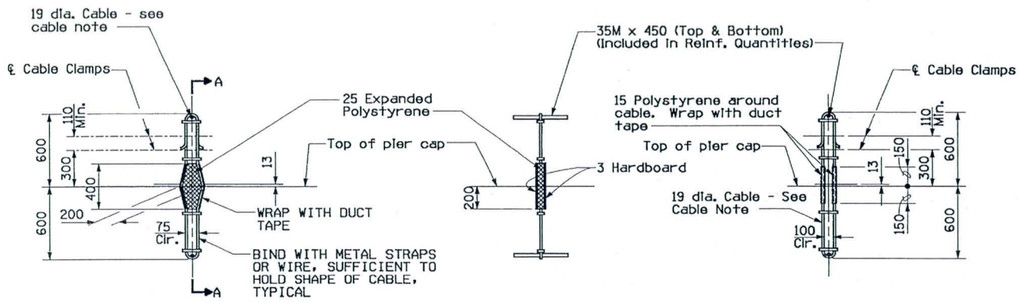

EXPANSION RESTRAINERS
(At Abutments and Expansion Piers)

SECTION A-A

FIXED RESTRAINER
(At Pinned Piers)

CABLE NOTE:
Restrainer cables shall be 19 dia. preformed 6 x 19 (IWRC) galvanized with a minimum breaking strength of 187kN.

VERTICAL RESTRAINER DETAILS
N.T.S.

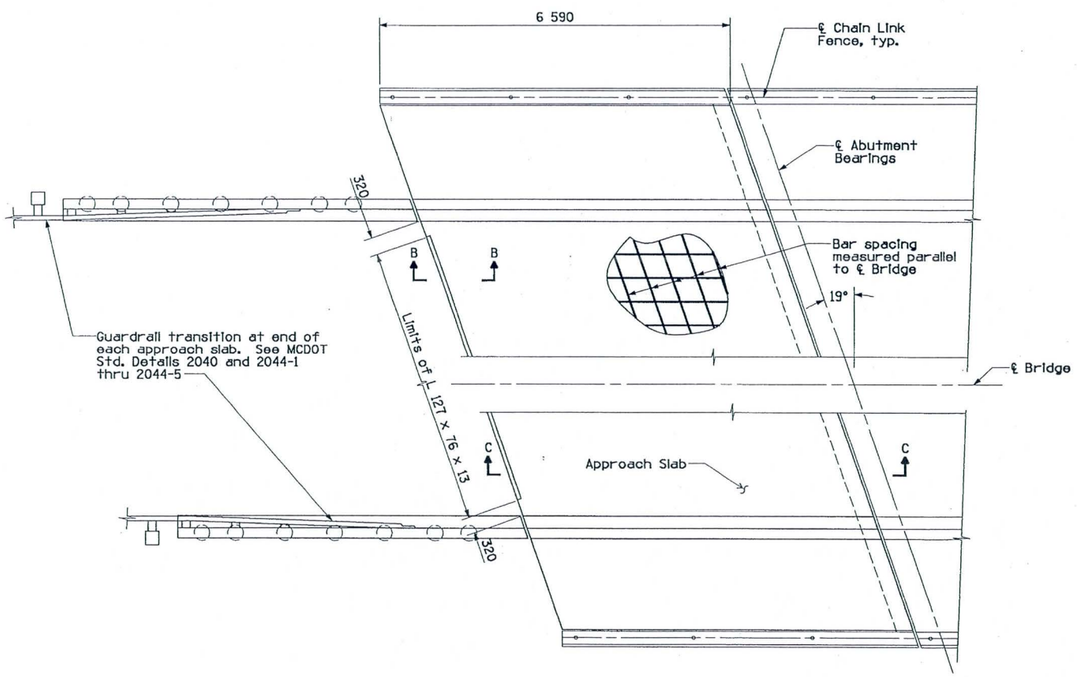

PLAN
Scale 1:50

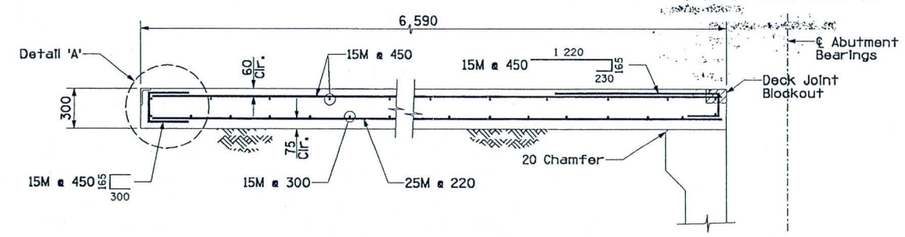

SECTION C-C
Scale 1:20

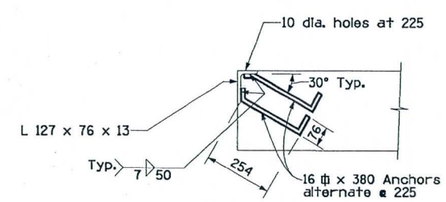

NOTE:
Omit guard angle thru sidewalks.

DETAIL A
Scale 1:10

TO ACCOMPANY CICOP #1

This Sheet to Replace Sheet S25

NO.	REVISION	BY	DATE
1	Revised per Value Engineering	JG	12/97
2			
3			

MARICOPA COUNTY
DEPARTMENT OF TRANSPORTATION
ENGINEERING DIVISION

116TH AVENUE BRIDGE
OVER GILA RIVER

	BY	DATE
DESIGNED	V. WISMER	6/95
DRAWN	J. GILMORE	12/94
CHECKED	V. WISMER	6/95

Registered Professional Engineer (Civil) CERTIFICATE NO. 18423 DONALD R. DAVIS Date Signed 11-6-97 ARIZONA, U.S.A.

HOFFMAN-MILLER ENGINEERS, INC.
PHOENIX ARIZONA

MISCELLANEOUS DETAILS - 1
SHEET OF S25A

TRACS NO. SS34501C

$FILE$
$DATE$
$TIME$
$$$$ 12/02/94

F.W.H.A. REGION	STATE	PROJECT NO.	SHEET NO.	TOTAL SHEETS	RECORD DRAWING
9	AZ.	STP.MMA-0(18)F	58	68	

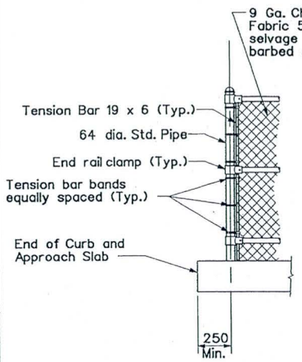

TYPICAL END POST ELEVATION

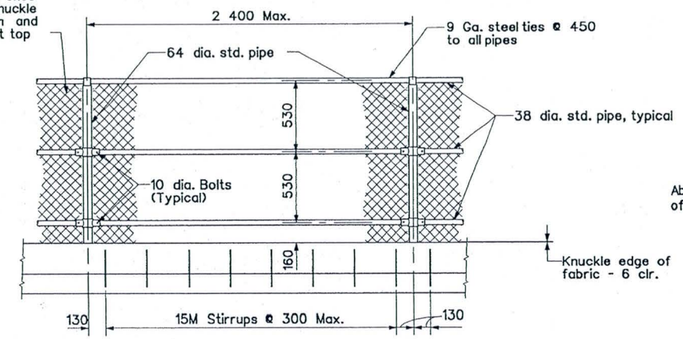

TYPICAL PANEL ELEVATION

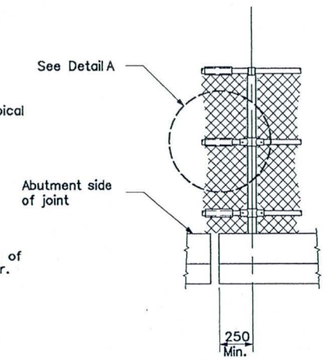

DETAIL AT EXPANSION JOINT

CHAIN LINK FENCE DETAILS

N. T. S.

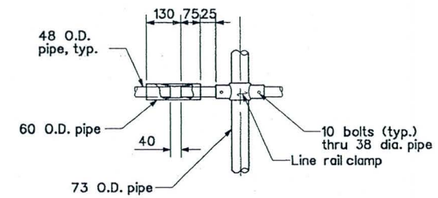

DETAIL A

N. T. S.

CHAIN LINK FENCE NOTES

Chain link fence fabric, posts, fittings and hardware shall conform to AASHTO M181 - Grade I or Grade II. The zinc coated fabric shall be Class A.

All galvanizing that has been damaged in handling, transporting or welding shall be repaired by the application of a paste compound of an approved zinc powder and flux.

All exposed edges shall be smooth.

All bolt heads shall be to the inside.

RECORD DRAWING

RECORD DRAWING NOTATIONS

These record drawings reflect certain dimensions, details, specifications, and plan revisions prepared by others or obtained from other record drawings which have not been independently verified by Entranco. As a result, Entranco is not responsible for the accuracy, appropriateness or completeness of such information depicted in these record drawing notations.

ENTRANCO ENGINEERS, INC.
DATE: 8-10-99

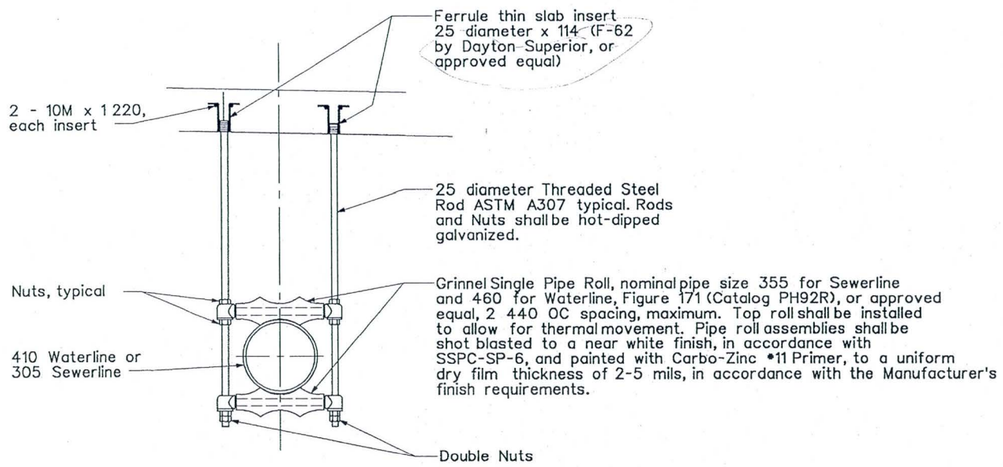

PIPE SUPPORT DETAIL

N. T. S.

NO.	REVISION	BY	DATE
1			
2			
3			

MARICOPA COUNTY
DEPARTMENT OF TRANSPORTATION
ENGINEERING DIVISION

116TH AVENUE BRIDGE
OVER GILA RIVER

	BY	DATE
DESIGNED	V. WISMER	12/94
DRAWN	J. GILMORE	12/94
CHECKED	V. WISMER	6/95

HOFFMAN-MILLER ENGINEERS, INC.
PHOENIX ARIZONA

MISCELLANEOUS DETAILS - 2

SHEET OF S26 S29

TRACS NO. SS34501C

FILE NAME 116BDGN DATE 12/02/94

f:\ptg-data\projects\641466\dgn\68 Aug. 05, 1997 10:06:54

F.H.W.A. REGION	STATE	PROJECT NO.	SHEET NO.	TOTAL SHEETS	RECORD DRAWING
9	AZ.	STP-MMA-0(18)P	59	68	

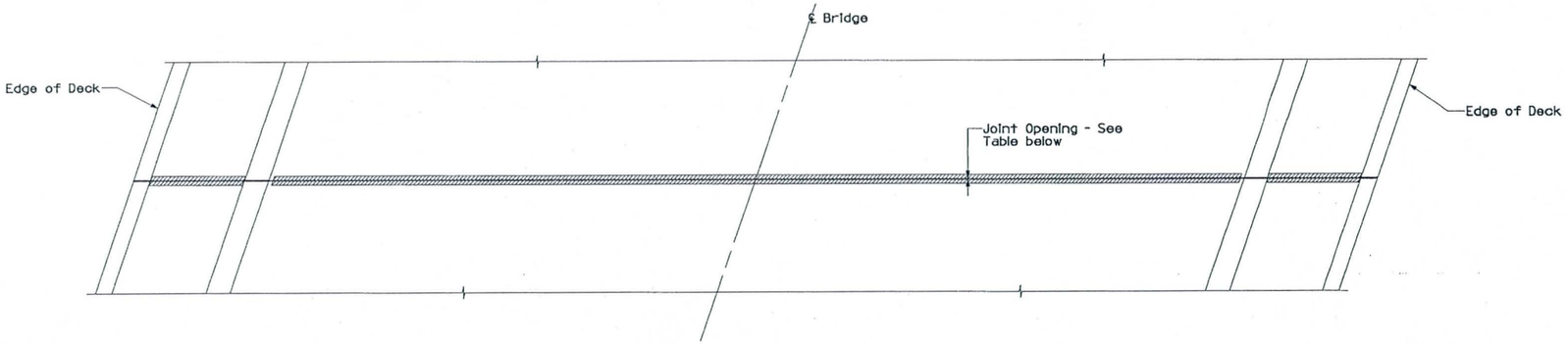

TYPICAL DECK JOINT PLAN
Scale 1:50

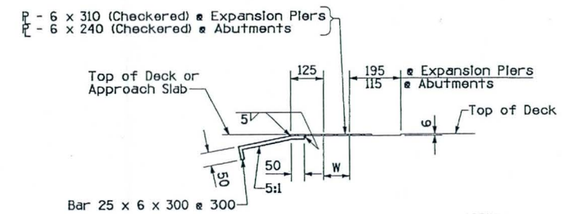

SIDEWALK JOINT
Scale 1:10

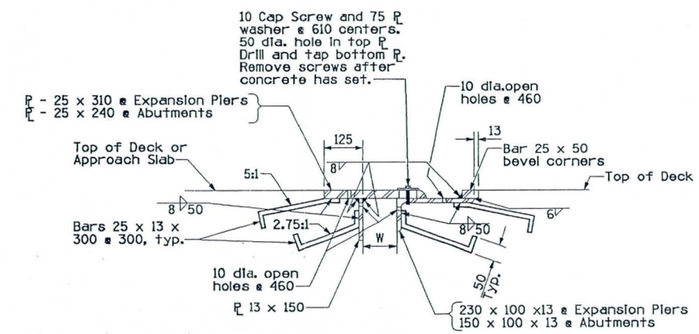

ROADWAY JOINT
Scale 1:10

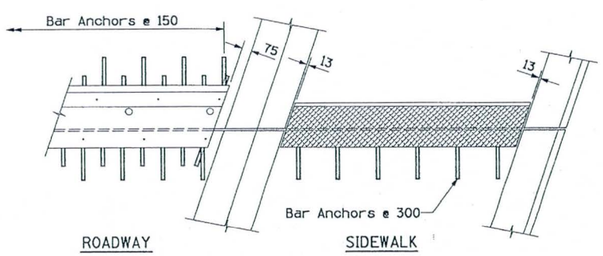

TYPICAL EXPANSION ARMOR PLAN
Scale 1:20

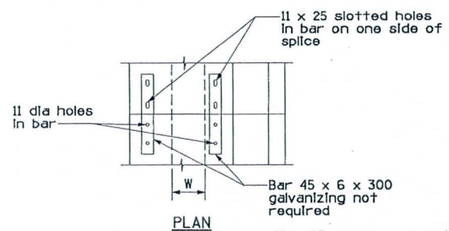

PLAN

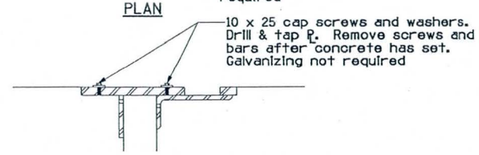

SECTION

TYPICAL SPLICE DETAILS
Scale 1:10

RECORD DRAWING

RECORD DRAWING NOTATIONS

These record drawings reflect certain dimensions, details, specifications, and plan revisions prepared by others or obtained from other record drawings which have not been independently verified by Entranco. As a result, Entranco is not responsible for the accuracy, appropriateness or completeness of such information depicted in these record drawing notations.

ENTRANCO ENGINEERS, INC.
DATE: 8-10-99

DECK JOINT OPENING (W)										
LOCATION	TEMPERATURE (°C)									
	0	5	10	15	20	25	30	35	40	45
@ Abutments	65	60	50	45	40	35	30	30	25	20
@ Expansion Piers	130	110	95	75	60	50	40	35	25	15

NO.	REVISION	BY	DATE
1			
2			
3			

MARICOPA COUNTY
DEPARTMENT OF TRANSPORTATION
ENGINEERING DIVISION

116TH AVENUE BRIDGE
OVER GILA RIVER

	BY	DATE
DESIGNED	V. WISMER	6/95
DRAWN	J. GILMORE	1/95
CHECKED	V. WISMER	6/95

HOFFMAN-MILLER ENGINEERS, INC.
PHOENIX ARIZONA

DECK JOINT DETAILS

SHEET OF
S27 S29

TRACS NO. SS34501C

FILE NAME
MB1.DGN 12/02/94

F.H.W.A. REGION	STATE	PROJECT NO.	SHEET NO.	TOTAL SHEETS	RECORD DRAWING
9	AZ.	STP-MMA-0(18)P	60	68	

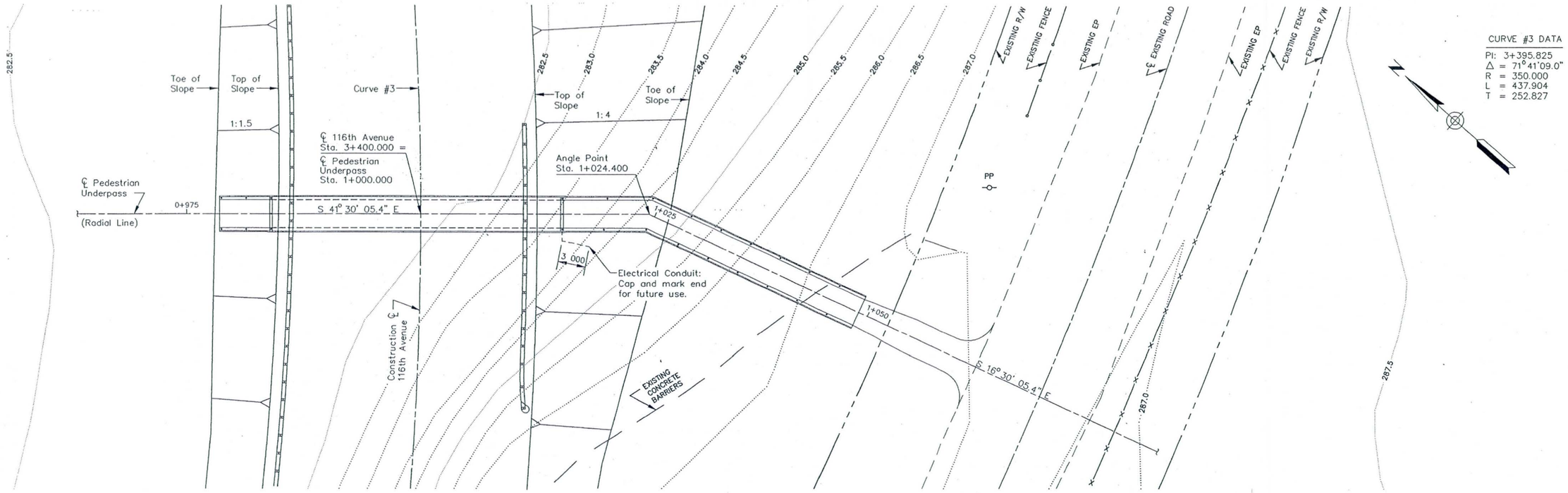

PLAN
Scale 1:200

RECORD DRAWING

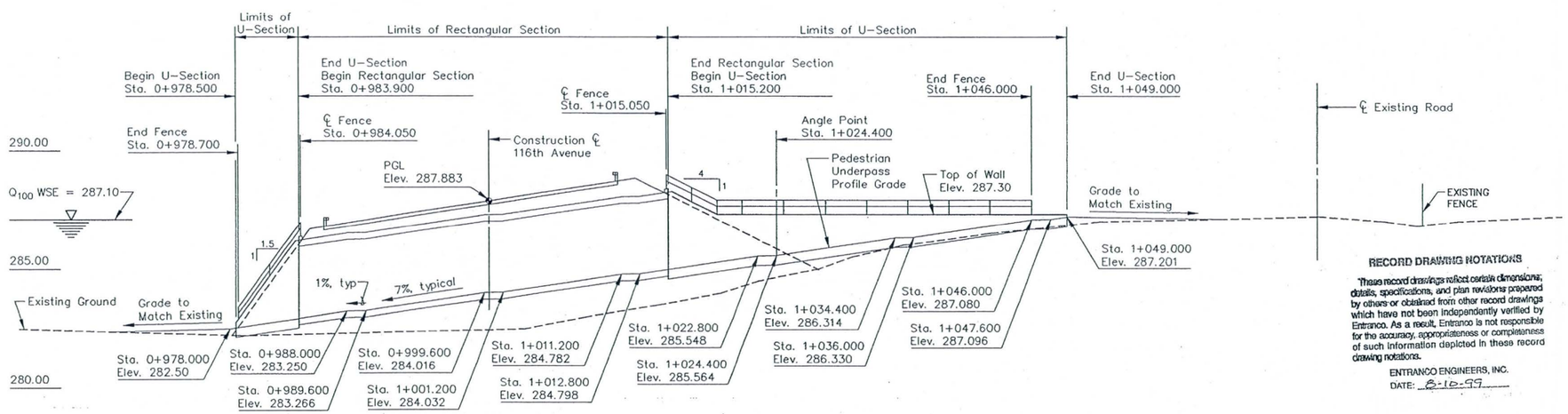

SECTION ALONG ℄ PEDESTRIAN UNDERPASS
Scale 1:200 Horizontal
1:100 Vertical

NOTES:

See Sheet S29 for Underpass Details.

All structures shall have formed construction joints in top slab and walls (optional in floor slab) spaced not more than 11 700 apart, or as shown. Reinforcing steel shall project 460 through the joint. The joint shall be made with 6 plywood bulkhead which shall be left in place. Joints shall be perpendicular to the centerline of the box.

RECORD DRAWING NOTATIONS

These record drawings reflect certain dimensions, details, specifications, and plan revisions prepared by others or obtained from other record drawings which have not been independently verified by Entranco. As a result, Entranco is not responsible for the accuracy, appropriateness or completeness of such information depicted in these record drawing notations.

ENTRANCO ENGINEERS, INC.
DATE: 8-10-99

NO.	REVISION	BY	DATE
1			
2			
3			

MARICOPA COUNTY
DEPARTMENT OF TRANSPORTATION
ENGINEERING DIVISION

116TH AVENUE BRIDGE
OVER GILA RIVER

	BY	DATE
DESIGNED	R. PRICE	6/95
DRAWN	J. TERRY	6/95
CHECKED	V. WISMER	6/95

HOFFMAN-MILLER ENGINEERS, INC.
PHOENIX ARIZONA

PEDESTRIAN UNDERPASS PLAN

SHEET OF
S28 S29

TRACS NO. SS34501C,

mcdotstd.bdr 10/18/94

F.H.W.A. REGION	STATE	PROJECT NO.	SHEET NO.	TOTAL SHEETS	RECORD DRAWING
9	AZ.	STP-MMA-0(18)P	61	68	

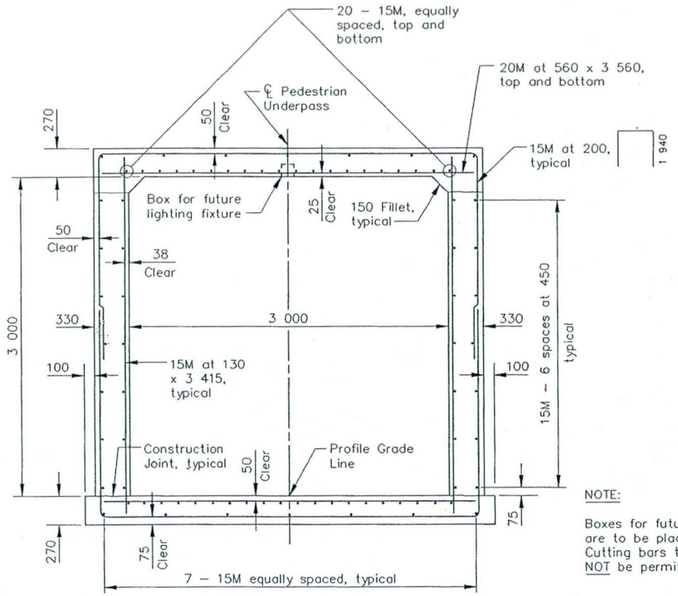

TYPICAL RECTANGULAR SECTION
Scale 1:25

NOTE:

Boxes for future lighting and Junction Boxes are to be placed between reinforcing bars. Cutting bars to facilitate installation will NOT be permitted.

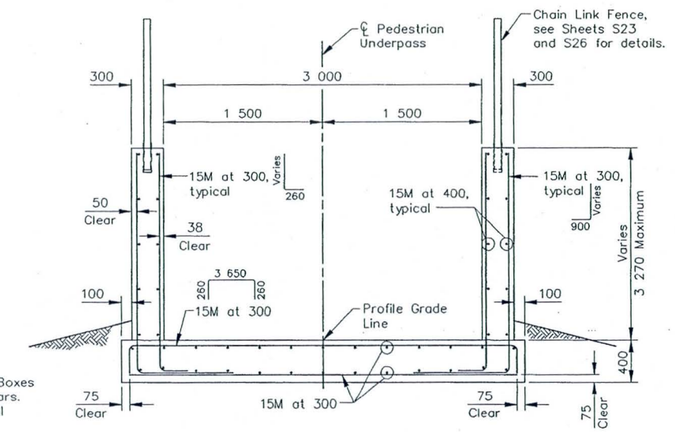

TYPICAL U-SECTION
Scale 1:25

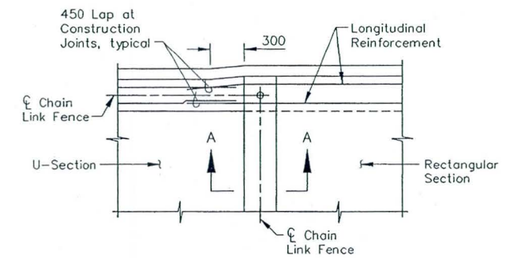

WALL TRANSITION FROM
U-SECTION TO RECTANGULAR SECTION
Scale 1:25

RECORD DRAWING

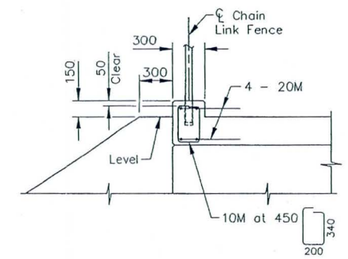

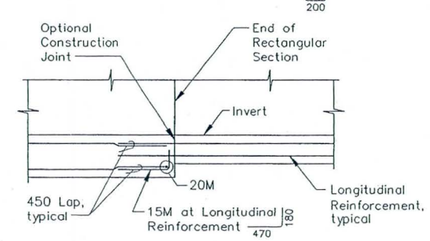

SECTION A–A
Scale 1:25

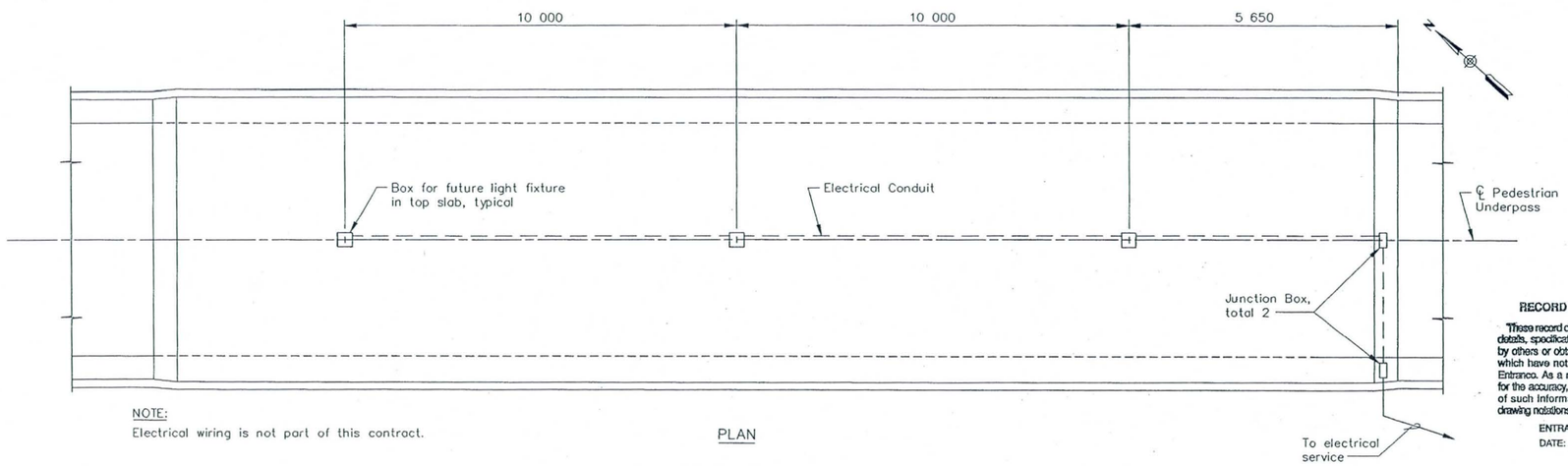

NOTE:
Electrical wiring is not part of this contract.

PLAN

FUTURE LIGHTING FIXTURE SCHEMATIC
N. T. S.

RECORD DRAWING NOTATIONS

These record drawings reflect certain dimensions, details, specifications, and plan revisions prepared by others or obtained from other record drawings which have not been independently verified by Entranco. As a result, Entranco is not responsible for the accuracy, appropriateness or completeness of such information depicted in these record drawing notations.

ENTRANCO ENGINEERS, INC.
DATE: 8-10-99

NO.	REVISION	BY	DATE
3			
2			
1			

MARICOPA COUNTY
DEPARTMENT OF TRANSPORTATION
ENGINEERING DIVISION

116TH AVENUE BRIDGE
OVER GILA RIVER

	BY	DATE
DESIGNED	R. PRICE	6/95
DRAWN	J. TERRY	6/95
CHECKED	V. WISMER	6/95

HOFFMAN-MILLER ENGINEERS., INC.
PHOENIX ARIZONA

PEDESTRIAN UNDERPASS DETAILS

SHEET OF
S29 S29

TRACS NO. SS34501C

mcdstd.bdr 10/18/94

RECORD DRAWING

RECORD DRAWING NOTATIONS

These record drawings reflect certain dimensions, details, specifications, and plan revisions prepared by others or obtained from other record drawings which have not been independently verified by Entranco. As a result, Entranco is not responsible for the accuracy, appropriateness or completeness of such information depicted in these record drawing notations.

ENTRANCO ENGINEERS, INC.
DATE: 8-10-99

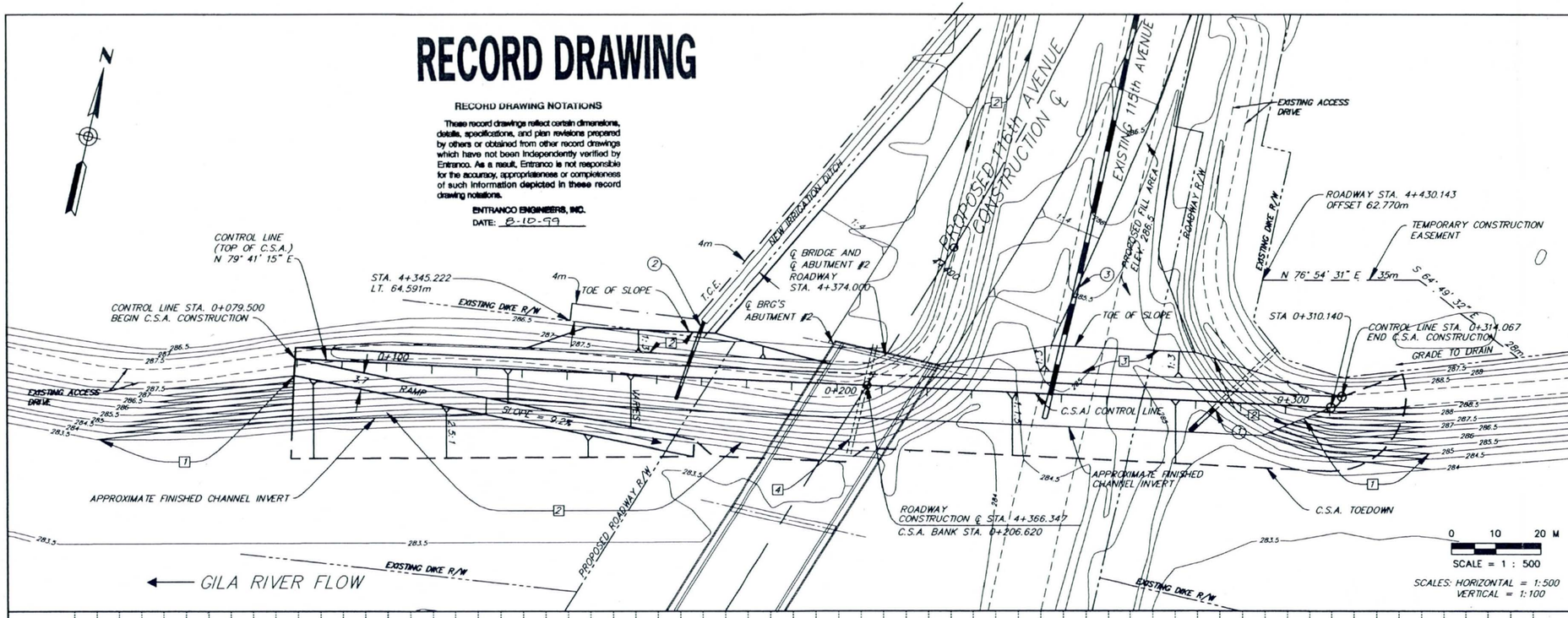

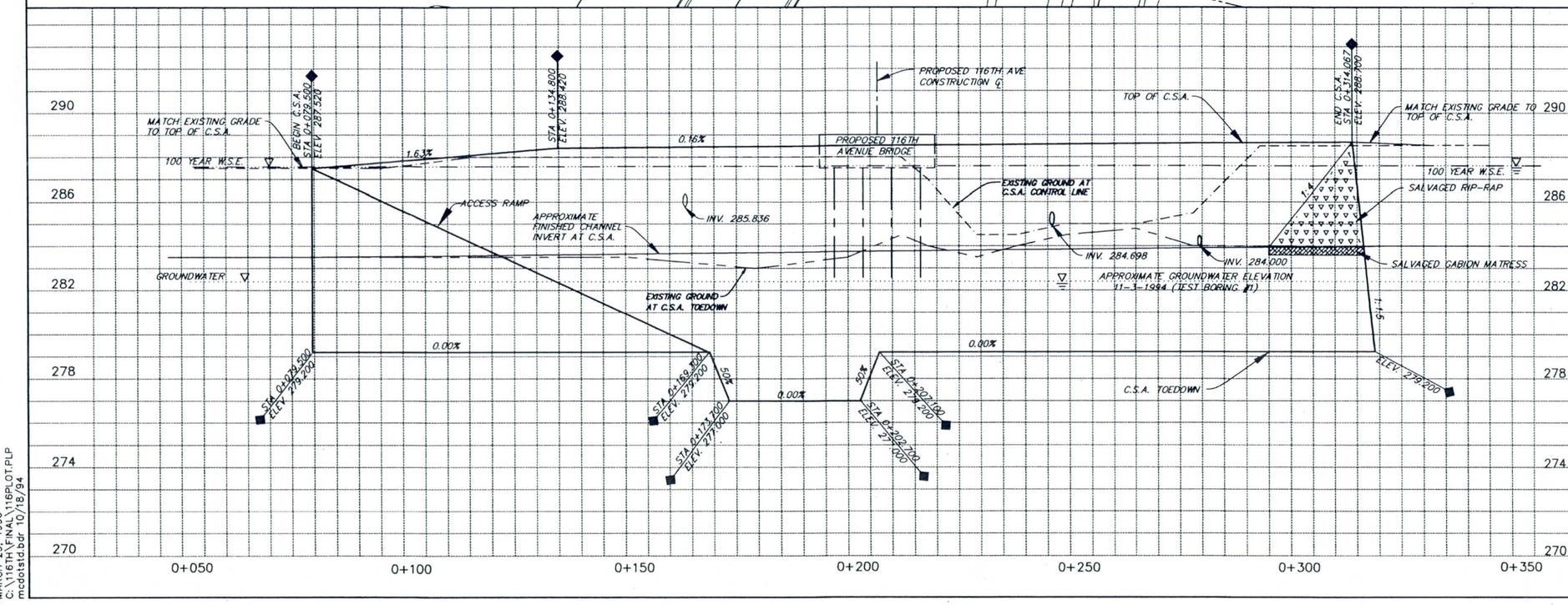

F.H.W.A. REGION	STATE	PROJECT NO.	SHEET NO.	TOTAL SHEETS	RECORD DRAWING
9	AZ	STP.MMA-0(18)P	62	68	

☐ REMOVAL/RELOCATE ☐

1. SALVAGE AND REPLACE EXISTING RIP-RAP AND GABION MATRESS TO MATCH EXISTING
2. SALVAGE EXISTING RIP-RAP FOR PLACEMENT ON BACKSIDE OF EMBANKMENT
3. PLACE SALVAGED RIP-RAP ON NEW EMBANKMENT BACK SLOPE TO MATCH EXISTING
4. REMOVE EXISTING DRAIN PIPE (SEE IRRIGATION PLANS, SHT W1)

○ CONSTRUCTION ○

1. EXTEND EXISTING 450mm CMP PIPE 8m THRU C.S.A.
2. NEW PIPE CULVERT (SEE IRRIGATION PLANS, SHT. W1)
3. NEW STORM DRAIN (SEE STORM DRAIN PLANS, SHTS. D2 AND D3)

NOTE: SLOPE ABOVE RAMP VARIES; SEE C.S.A. DETAILS - NORTH BANK SHEET C6

NOTE: ALL DIMENSIONS AND ELEVATIONS ARE IN METERS UNLESS NOTED OTHERWISE

NO.	REVISION	BY	DATE
3			
2			
1			

MARICOPA COUNTY
DEPARTMENT OF TRANSPORTATION
ENGINEERING DIVISION

116TH AVENUE BRIDGE
OVER GILA RIVER

	BY	DATE
DESIGNED	M. LISOTTA	3/29/96
DRAWN	B. LOTT	3/29/96
CHECKED	T. MORRISON	3/29/96

SIMONS, LI, & ASSOCIATES, INC.
TEMPE ARIZONA

NORTH BANK C.S.A.

SHEET C1 OF 7

TRACS NO. SS34501C

C:\116TH\FINAL\SHT-C1
MARCH 29, 1996
C:\116TH\FINAL\116PLOT.PLP
mcdotstd.bdr 10/18/94

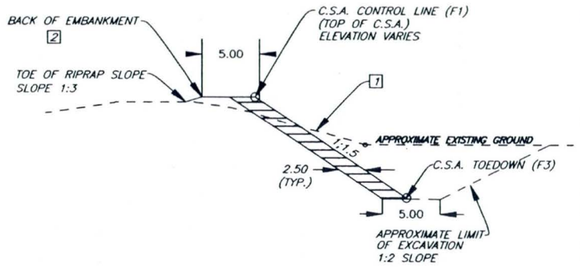

TYPICAL SECTION NORTH BANK

NTS

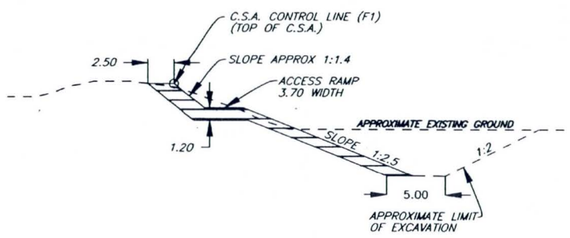

NORTH BANK RAMP SECTION

STA. 0+100.000

NTS

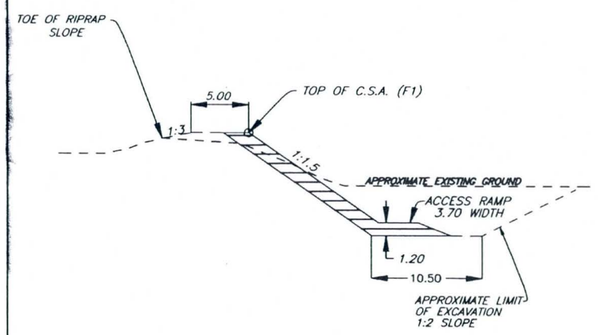

NORTH BANK RAMP SECTION

STA. 0+155.000

NTS

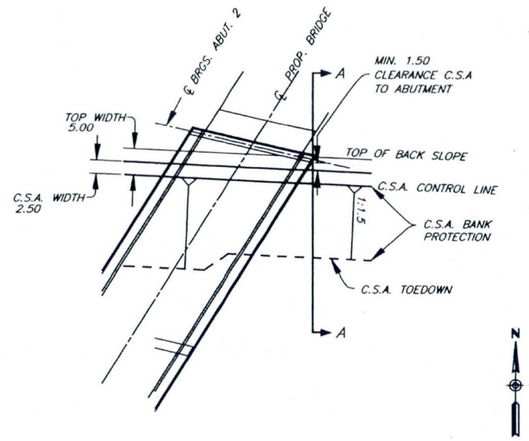

PLAN VIEW

NTS

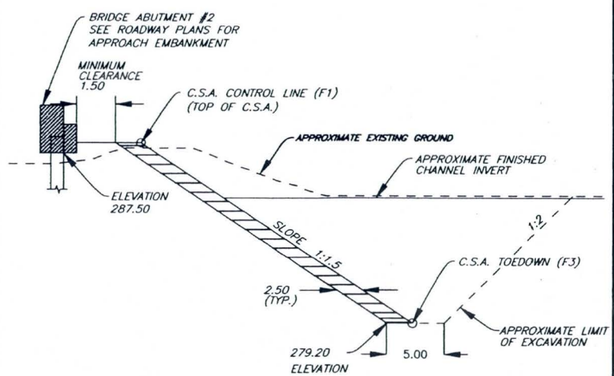

SECTION A–A

C.S.A. DETAIL AT BRIDGE ABUTMENT #2

STA. 0+221.804

NTS

NORTH BANK C.S.A. OFFSET TABLE

BANK STATION	(B1) OFFSET	(B1) ELEV.	(F1) OFFSET	(F1) ELEV.	(F3) OFFSET	(F3) ELEV.	(R1) OFFSET	(R1) ELEV.	(R2) OFFSET	(R2) ELEV.
0+079.500	-2.500	287.520	0	287.520	24.600	279.200	0	287.520	3.700	287.520
0+085.000	-2.750	287.610	0	287.610	24.072	279.200	0.852	287.010	4.552	287.010
0+100.000	-3.400	287.850	0	287.850	22.906	279.200	3.176	285.621	6.876	285.621
0+120.000	-4.300	288.180	0	288.180	21.349	279.200	6.274	283.768	9.974	283.768
0+134.800	-5.000	288.420	0	288.420	20.196	279.200	8.567	282.396	12.267	282.396
0+140.000	-5.000	288.428	0	288.428	19.792	279.200	9.322	281.915	13.072	281.915
0+155.000	-5.000	288.452	0	288.452	18.624	279.200	11.696	280.497	15.396	280.497
0+169.300	-5.000	288.474	0	288.474	17.611	279.200	13.911	279.200	17.611	279.200
0+169.300	-5.000	288.474	0	288.474	13.911	279.200	--	--	--	--
0+173.700	-5.000	288.481	0	288.481	17.222	277.000	--	--	--	--
0+202.700	-5.000	288.526	0	288.526	17.289	277.000	--	--	--	--
0+207.100	-5.000	288.533	0	288.533	14.000	279.200	--	--	--	--
0+216.169	-5.000	288.548	0	288.548	14.022	279.200	--	--	--	--
0+221.804	-4.000	288.557	0	288.557	14.036	279.200	--	--	--	--
0+222.389	-5.000	288.558	0	288.558	14.037	279.200	--	--	--	--
0+300.952	-5.000	288.684	0	288.684	14.226	279.200	--	--	--	--
0+310.140	-5.000	288.694	0	288.694	14.241	279.200	--	--	--	--
0+314.067	0.000	288.700	0	288.700	14.250	279.200	--	--	--	--

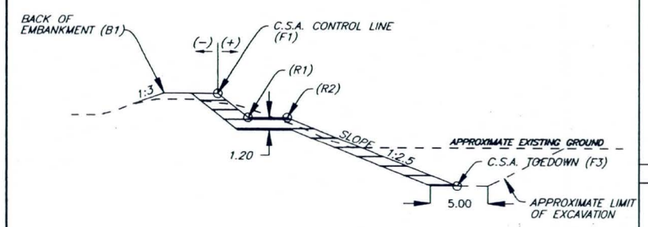

NORTH BANK CONTROL SECTION

NTS

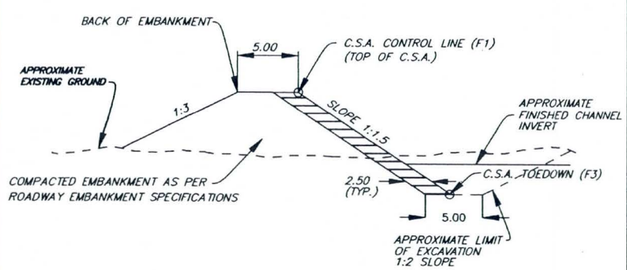

TYPICAL FILL SECTION FOR NORTH BANK

STA. 0+225.000 TO STA. 0+280.000

NTS

F.H.W.A. REGION	STATE	PROJECT NO.	SHEET NO.	TOTAL SHEETS	RECORD DRAWING
9	AZ	STP.MMA-0(18)P	67	68	

☐ REMOVAL/RELOCATE ☐

1 SALVAGE EXISTING RIPRAP MATERIAL (REUSE AS SPECIFIED ON SHEET C1)

2 PLACE SALVAGED RIP-RAP ON NEW EMBANKMENT BACK SLOPE

○ CONSTRUCTION ○

RECORD DRAWING

RECORD DRAWING NOTATIONS

These record drawings reflect certain dimensions, details, specifications, and plan revisions prepared by others or obtained from other record drawings which have not been independently verified by Entranco. As a result, Entranco is not responsible for the accuracy, appropriateness or completeness of such information depicted in these record drawing notations.

ENTRANCO ENGINEERS, INC.

DATE: 8-10-97

NOTE: ALL DIMENSIONS AND ELEVATIONS ARE IN METERS UNLESS NOTED OTHERWISE

NO.	REVISION	BY	DATE
1			
2			
3			

MARICOPA COUNTY
DEPARTMENT OF TRANSPORTATION
ENGINEERING DIVISION

116TH AVENUE BRIDGE
DETAILS

	BY	DATE
DESIGNED	T. MORRISON	3/29/96
DRAWN	B. LOTT	3/29/96
CHECKED	M. LISOTTA	3/29/96

Registered Professional Engineer (Civil) CERTIFICATE NO. 21580 DENNIS L. RICHARDS Date Signed 8/15/97 ARIZONA, U.S.A.

SIMONS, LI & ASSOCIATES

TEMPE ARIZONA

C.S.A. DETAILS – NORTH BANK

SHEET OF C6 OF 7

TRACS NO. SS34501C

C:\116TH\FINAL\SHT-C6
MARCH 29, 1996 - 8:16
C:\116TH\FINAL\116PLOT.PLP
mcdotstd.bdr 10/18/94

F.W.H.A. REGION	STATE	PROJECT NO.	SHEET NO.	TOTAL SHEETS	RECORD DRAWING
9	AZ.	STP-MMA-0018(P)	26	68	

☐ REMOVAL/RELOCATE ☐

RECORD DRAWING

RECORD DRAWING NOTATIONS

These record drawings reflect certain dimensions, details, specifications, and plan revisions prepared by others or obtained from other record drawings which have not been independently verified by Entranco. As a result, Entranco is not responsible for the accuracy, appropriateness or completeness of such information depicted in these record drawing notations.

ENTRANCO ENGINEERS, INC.
DATE: 8-10-99

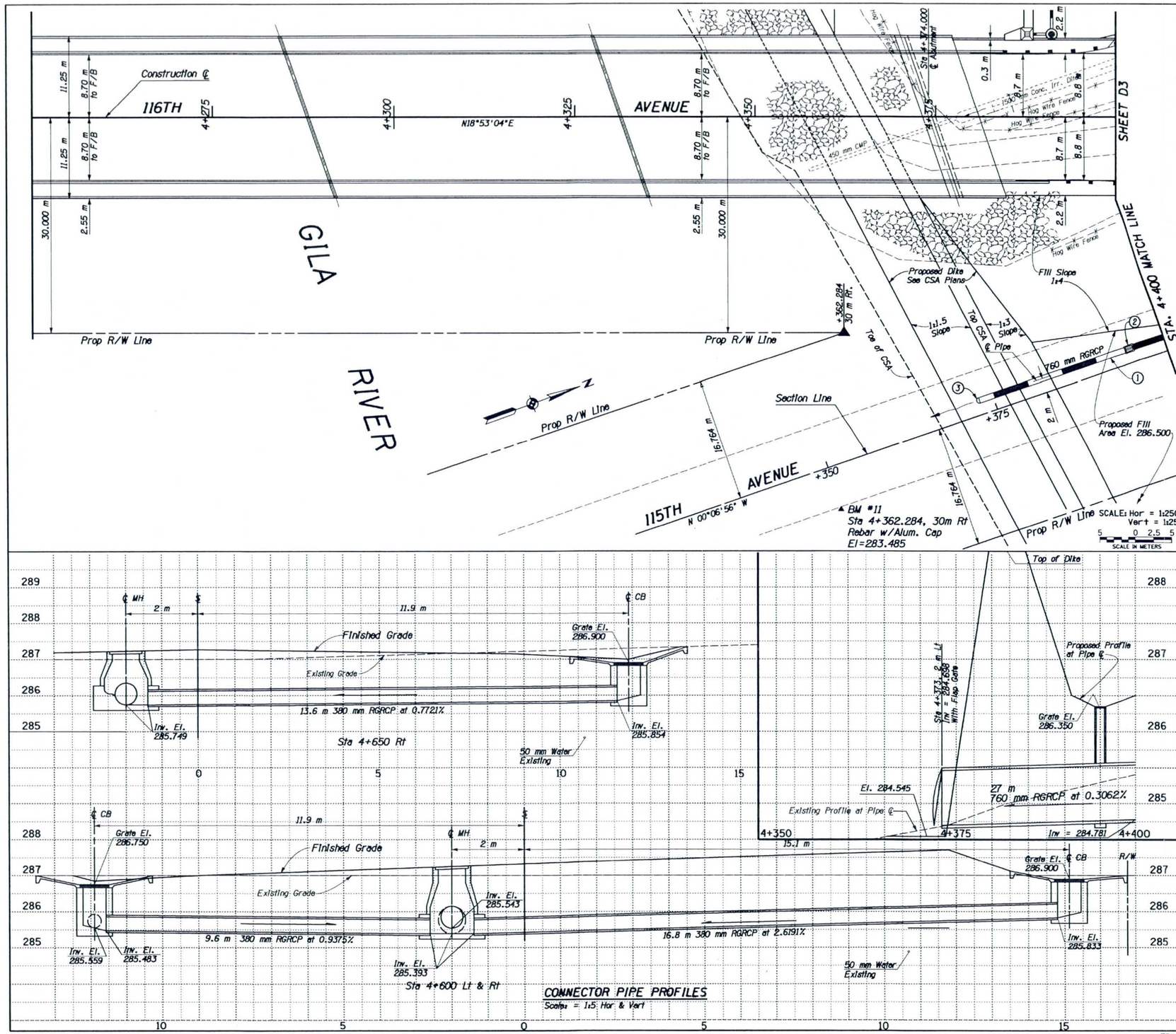

CONSTRUCTION

1. Sta. 4+373 to Sta. 4+400, 2 m Lt. (Section Line Stationing)
   Install New 760 mm x 27 m RGRCP
2. Sta. 4+395, 2 m Lt. (Section Line Stationing)
   Install New Catch Basin Type "H" per MAG Detail 538
   New Grate per MAG Detail 540-1 Plan IA, TW-1
3. Sta. 4+373, 2 m Lt. (Section Line Stationing)
   Install 0.762 m diameter Flap Gate with Setting Collar
   See Detail B, Sheet P23.

NO.	REVISION	BY	DATE
1			
2			
3			

MARICOPA COUNTY
DEPARTMENT OF TRANSPORTATION
ENGINEERING DIVISION

116TH AVENUE BRIDGE
OVER GILA RIVER
PROJECT NO. 68832

	BY	DATE
DESIGNED	ROBERT MEYERS	2/96
DRAWN	J. GILMORE	7/96
CHECKED	J. S. PEGANY	7/96

ENGINEERING ALLIANCE, INC.
737 E Bethany Home Rd Suite C-100 (602) 249-4833
PHOENIX, ARIZONA 85014

STORM DRAIN PLAN AND PROFILE
STA 4+350 TO STA 4+400

SHEET D2 OF 4

TRACS NO. SS34501C

f:\ptg-data\projects\641465\dgn\cr Aug. 06, 1997 13:09:37

F.W.H.A. REGION	STATE	PROJECT NO.	SHEET NO.	TOTAL SHEETS	RECORD DRAWING
9	AZ.	STP-MMA-0018(P)	27	68	

☐ REMOVAL/RELOCATE ☐

RECORD DRAWING

RECORD DRAWING NOTATIONS

These record drawings reflect certain dimensions, details, specifications, and plan revisions prepared by others or obtained from other record drawings which have not been independently verified by Entrance. As a result, Entrance is not responsible for the accuracy, appropriateness or completeness of such information depicted in these record drawing notations.

ENTRANCE ENGINEERING, INC.
DATE: 8-10-99

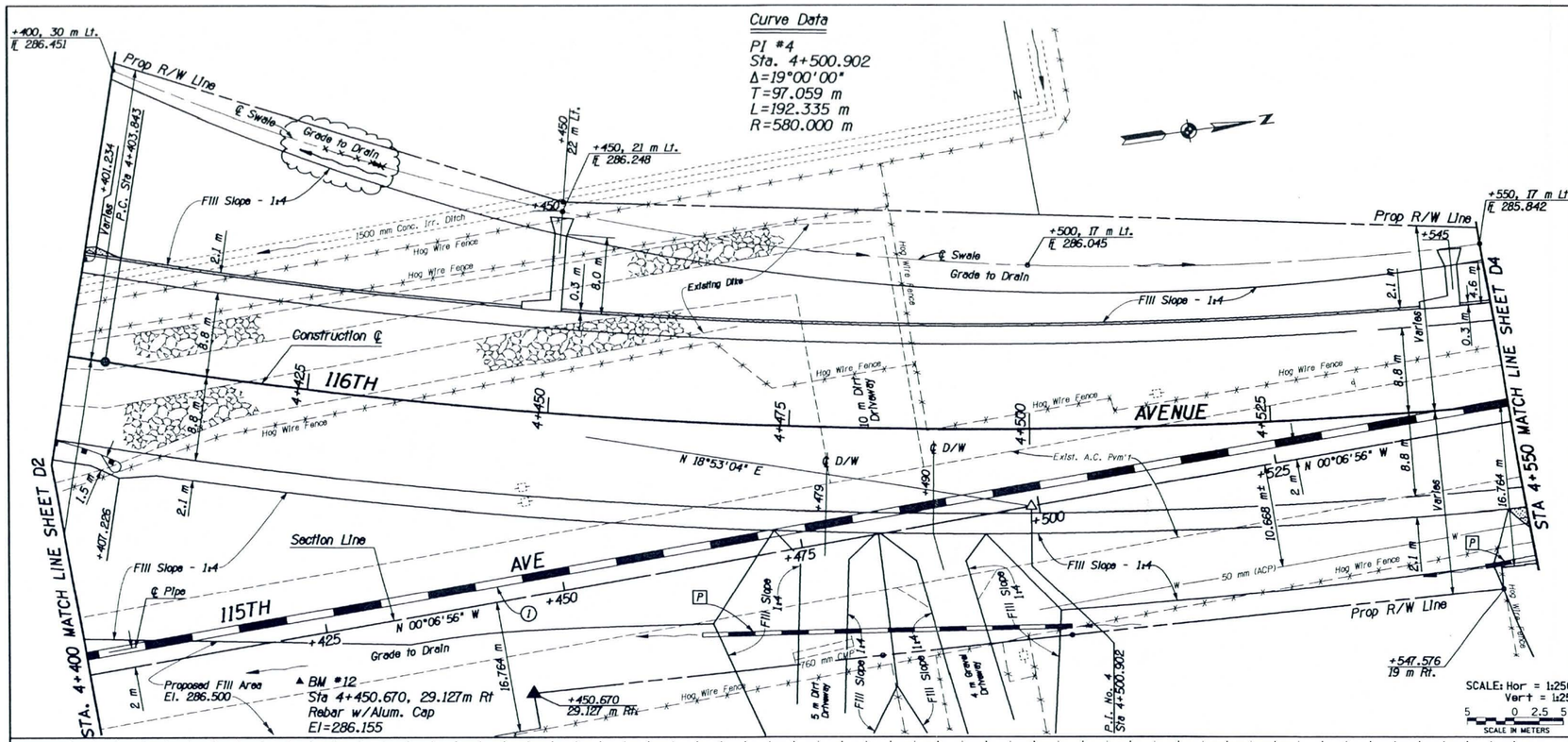

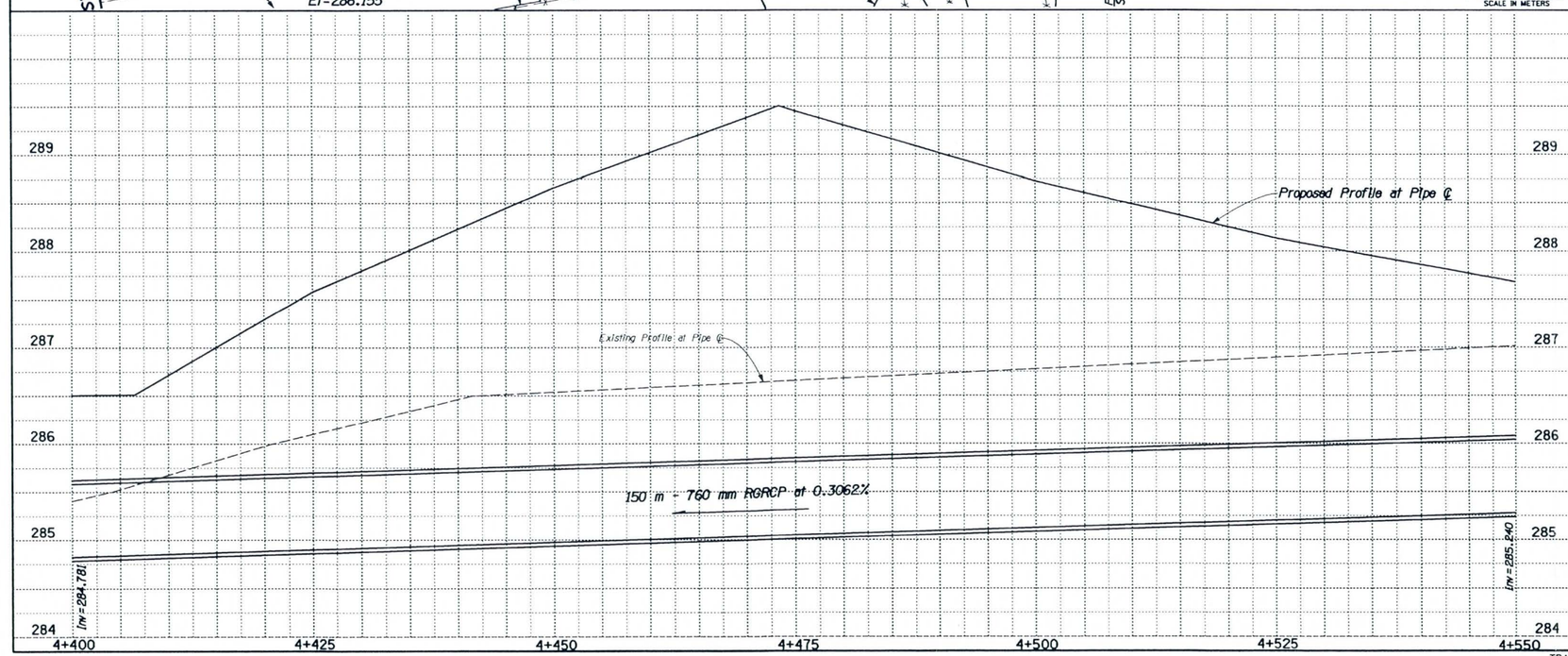

◯ CONSTRUCTION ◯

(1) Sta. 4+400 to Sta. 4+550, 2 m Lt. (Section Line Stationing) Install 760 mm x 150 m RGRCP

P For Driveway Culvert, See Sheet P15.

NO.	REVISION	BY	DATE
1			
2			
3			

MARICOPA COUNTY
DEPARTMENT OF TRANSPORTATION
ENGINEERING DIVISION

116TH AVENUE BRIDGE
OVER GILA RIVER
PROJECT NO. 68832

	BY	DATE
DESIGNED	ROBERT MEYERS	2/96
DRAWN	J. GILMORE	7/96
CHECKED	J. S. PEGANY	7/96

Registered Professional Engineer CERTIFICATE NO. 6207 ARIZONA, U.S.A.

ENGINEERING ALLIANCE, INC.
727 E. Bethany Home Rd. Suite C-100 (602) 248-0203
PHOENIX, ARIZONA 85014

STORM DRAIN PLAN AND PROFILE
STA 4+400 TO STA 4+550

SHEET D3 OF 4

TRACS NO. SS34501C

f:\ptg-data\projects\641466\dgn\cr Aug. 06, 1997 13:14:01

F.W.H.A. REGION	STATE	PROJECT NO.	SHEET NO.	TOTAL SHEETS	RECORD DRAWING
9	AZ.	STP-MMA-0108(P	29	68	

☐ REMOVAL/RELOCATE ☐

1 Sta. 4+357 to Sta. 4+378, Rt.
Remove 450 mm x 22 m Pipe
Fill & Compact Voids - LSR

2 Sta. 4+378, Rt. to Sta. 4+400, Lt.
Remove 23 m Concrete Ditch
Fill & Compact Voids - LSR

LSR - Part of Lump Sum Removal Item

◯ CONSTRUCTION ◯

1. Sta. 4+340, 36.750 m Lt. to Sta. 4+357, 38.8 m Lt.
Install New 450 mm x 17 m RGRCP, Slope +1.0412%
2. Sta. 4+357, 38.8 m Lt.
Install Pull-up Type Irrigation Gate, See Detail A, Sheet P23.
Type 'F' Catch Basin, MAG Std. Det. 535
3. Sta 4+357, 38.8 m Lt. to Sta 4+400, 32.7 m Lt.
Install 43 m New Concrete Lined Ditch, See Detail D, Sheet P23.
4. Sta. 4+340, 36.750 m Lt.
Install New 0.457 m diameter Flap Gate with Setting Collar, See Detail B, Sheet P23.

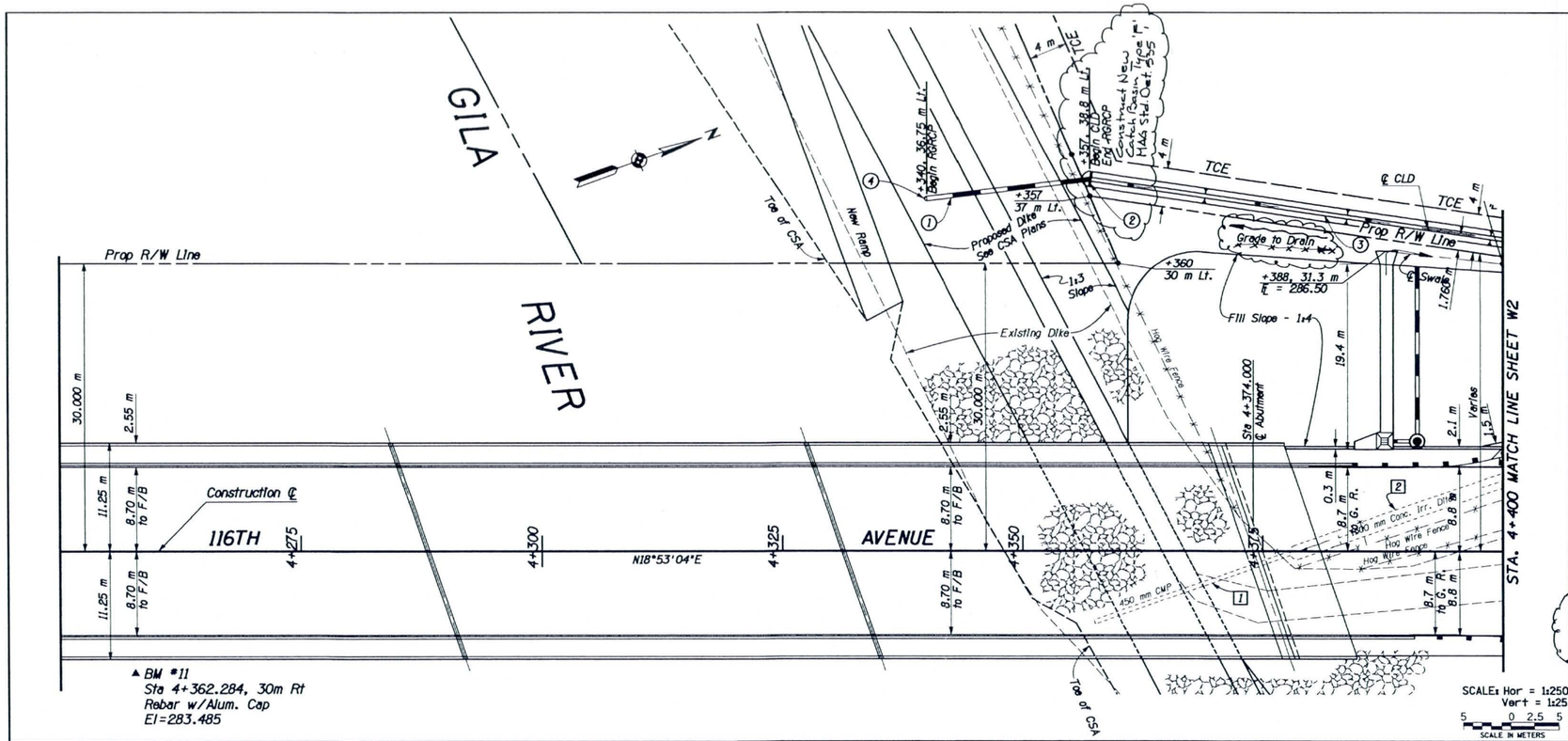

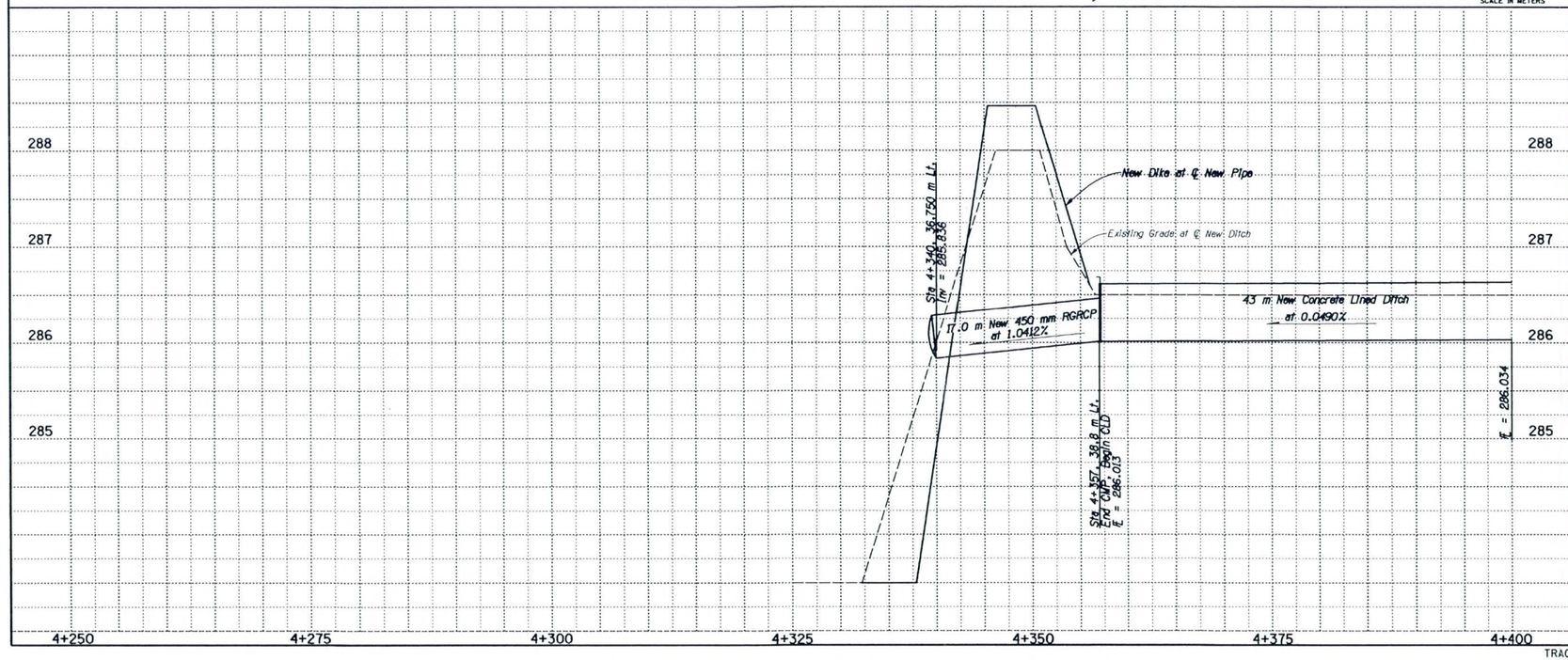

RECORD DRAWING

RECORD DRAWING NOTATIONS

These record drawings reflect certain dimensions, details, specifications, and plan revisions prepared by others or obtained from other record drawings which have not been independently verified by Entranco. As a result, Entranco is not responsible for the accuracy, appropriateness or completeness of such information depicted in these record drawing notations.

ENTRANCO ENGINEERS, INC.
DATE: 8-10-97

NO.	REVISION	BY	DATE
1			
2			
3			

MARICOPA COUNTY
DEPARTMENT OF TRANSPORTATION
ENGINEERING DIVISION

116TH AVENUE BRIDGE
OVER GILA RIVER
PROJECT NO. 68832

	BY	DATE
DESIGNED	T. LAVALETTE	2/96
DRAWN	J. GILMORE	7/96
CHECKED	J. S. PEGANY	7/96

Registered Professional Engineer CERTIFICATE NO. 6207 ARIZONA, U.S.A.

ENGINEERING ALLIANCE, INC.
737 E Bethany Home Rd Suite C-100 (602) 248-0033
PHOENIX, ARIZONA 85014

IRRIGATION PLAN
STA 4+250 to STA 4+400

SHEET W1 OF 4

TRACS NO. SS34501C

f:\ptg-data\projects\61468\dgn\cr Aug. 06, 1997 16:36:41