Property of
Flood Control District of MC Library
Please Return to
2801 W. Durango
Phoenix, AZ 85009

HYDROLOGIC STUDY

FOR

EFFLUENT LAKES PROJECT

AT

FOUNTAIN HILLS, ARIZONA

December 6, 1994

Prepared for

ANDERSON-NELSON, INC.
4441 East McDowell Road
Phoenix, Arizona 85008

Prepared by

AGK ENGINEERS, INC.
2255 North 44th Street, Suite 330
Phoenix, Arizona 85008
(602) 244-2566

Registered Professional Engineer (Civil)
CERTIFICATE NO.
10283
SAMUEL E.
KAO
Date Signed 12/6/94
ARIZONA, U.S.A.

HYDROLOGIC STUDY FOR EFFLUENT LAKES PROJECT AT FOUNTAIN HILLS, ARIZONA

TABLE OF CONTENTS

TABLE OF CONTENTS i

LIST OF APPENDICES ii

A. PURPOSE AND SCOPE 1

B. PROJECT LOCATION 1

C. WATERSHED DESCRIPTION 1

D. HYDROLOGIC MODELING 2
- 1. Methodology 2
- 2. Soils and Land Use 2
- 3. Rainfall Input for Storms up to 100-year Frequency 2
- 4. Probable Maximum Precipitation 3
- 5. Rainfall Losses 3
- 6. Unit Hydrograph and Time of Concentration 4
- 7. Runoff Modeling without the Proposed Lakes 5
- 8. Runoff Modeling With the Proposed Lakes 6

REFERENCES 8

LIST OF FIGURES

FIGURE 1 Flow Diagram for Cereus Wash (Without Effluent Lakes)
FIGURE 2 Flow Diagram for Cereus Wash (With Effluent Lakes)

LIST OF PLATES

PLATE 1 Hydrology Map
PLATE 2 Soils and Land Use Map

Registered Professional Engineer (Civil)
CERTIFICATE NO.
10283
SAMUEL E.
KAO
Date Signed 12/6/94
ARIZONA, U.S.A.

LIST OF APPENDICES

APPENDIX A - SUMMARY OF MODEL INPUT PARAMETERS WITHOUT PROPOSED LAKES

A.1 Watershed Parameters
A.2 Soil Properties
A.3 MCUHP1 Program Input/Output Values

APPENDIX B - SUMMARY OF MODEL INPUT PARAMETERS WITH PROPOSED LAKES IN PLACE

B.1 Watershed Parameters
B.2 Soil Properties
B.3 MCUHP1 Program Input/Output Values

APPENDIX C - RAINFALL CHARTS AND PROBABLE MAXIMUM PRECIPITATION

APPENDIX D - HEC-1 OUTPUTS (WITHOUT PROPOSED LAKES)

D.1 HEC-1 Output for 10-yr 6-hr storm
D.2 HEC-1 Output for 25-yr 6-hr storm
D.3 HEC-1 Output for 50-yr 6-hr storm
D.4 HEC-1 Output for 100-yr 6-hr storm
D.5 HEC-1 Output for 1/2 PMF 6-hr storm

APPENDIX E - LAKE AND SPILLWAY INFORMATION

E.1 Lake Elevation - Area - Storage Relations
E.2 Spillway Elevation - Discharge Relations

APPENDIX F - HEC-1 OUTPUTS (WITH PROPOSED LAKES IN PLACE)

F.1 HEC-1 Output for 1/2 PMF 6-hr storm
F.2 HEC-1 Output for 100-yr 24-hr storm

HYDROLOGIC STUDY FOR EFFLUENT LAKES PROJECT AT FOUNTAIN HILLS, ARIZONA

A. PURPOSE AND SCOPE

AGK Engineers, Inc. (AGK) is currently performing a hydrologic study and floodplain delineation project for the southern part of the Fountain Hills area under a contract with the Flood Control District of Maricopa County (District). The methodology for hydrologic modeling is based on the guidelines outlined in the District's *Hydrologic Design Manual* **(Reference 1)**. Procedures of parameter estimation and results of runoff modeling have been reviewed and approved by the District at various stages of the project.

Recently, MCO Properties Inc. (MCO) has planned to construct six lakes in the Cereus Wash watershed to store the treated sewage effluent during winter seasons when irrigation of golf courses is reduced. In November 1994, Anderson-Nelson Inc., a consultant to MCO, retained AGK as a subconsultant to perform a hydrologic study for the Effluent Lakes Project using the same methodology as required by the District for the floodplain delineation project. The scope of the hydrologic analyses includes the following:

1. To estimate peak discharges at various locations of the watershed for storms with 10, 25, 50, and 100 year frequencies without the proposed lakes.

2. To estimate the 1/2 probable maximum flood (1/2PMF) at each lake site without consideration of the proposed lakes.

3. To estimate the 100-year peak discharge and the 1/2 PMF at each lake site with the proposed lakes in place.

B. PROJECT LOCATION

The project area is located at the Town of Fountain Hills, within Sections 27 and 28, Township 3 North, Range 6 East, Gila and Salt River Base and Meridian, Maricopa County, Arizona.

C. WATERSHED DESCRIPTION

The watershed of Cereus Wash is situated on both sides of Shea Boulevard. The majority of the land within the watershed is still in its natural state. Runoff modeling was conducted on the basis of future development conditions, which were derived from the zoning information of the Town.

As shown on **Plate 1**, the watershed was divided into numerous subareas according to its flow patterns. Drainage area delineation was based on the 1" = 200', 2-foot contour interval map prepared by Kenney Aerial Mapping, Inc. **(Reference 2)**, and supplemented by field verification. The size, elevation, slope, and other characteristics of each subarea are shown in **Appendices A.1 and B.1.**

A total of six lakes has been planned by MCO Properties within the Cereus Wash watershed. Only Lakes 27-1 and 28-3 would be under the jurisdiction of the Arizona Department of Water Resources (ADWR). Locations of these proposed lakes are shown on **Plate 1**.

D. HYDROLOGIC MODELING

1. Methodology

Hydrologic modeling was performed by use of the HEC-1 computer program developed by the U.S. Army Corps of Engineers **(Reference 3)**. Estimation procedures for model parameters and components were based on the District's Manual **(Reference 1)**.

2. Soils and Land Use

Information on soil groups was obtained from the *Soil Survey of Aguila-Carefree Area,* published by the Soil Conservation Service (SCS) in April 1986 **(Reference 4)**. Boundaries of the soil groups are shown on **Plate 2**. Information on land use was furnished by the Town of Fountain Hills. Locations of specific land use within the Cereus Wash watershed are also shown on **Plate 2**. As mentioned earlier, the hydrologic study was based on the future development conditions.

3. Rainfall Input for Storms up to 100-year Frequency

The estimated rainfall depths for storms up to 100-year frequency were obtained from the charts derived from the NOAA Atlas published for Arizona **(Reference 5)**. The 6-hour storm was used as the input for peak flow estimation, while the 24-hour storm was used for flow volume estimation. Rainfall depths for the 10, 25, 50, and 100-year storms are tabulated in Table 1. Copies of the rainfall charts are included in **Appendix C**.

TABLE 1
RAINFALL DEPTHS FOR VARIOUS FREQUENCIES

Frequency	Rainfall Depth (inches)	
	6-hour Duration	24-hour Duration
10-year	2.20	not used
25-year	2.70	not used
50-year	3.00	not used
100-year	3.20	4.40

The distribution and area reduction for the 6-hour storm were obtained by use of a computer program known as MCUHP1, which was developed by the District. The SCS Type II Distribution was used for the 24-hour storm. Areal reduction for rainfall was not applied for the 24-hour storm because the study area is much less than the 10 square-mile criterion.

4. Probable Maximum Precipitation

The probable maximum precipitation (PMP) and its time distribution were estimated in accordance with the procedures contained in the *U.S.S Department of Commerce Hydrometeorological Report No. 49* **(Reference 6)**. Detailed computations for PMP are included in **Appendix C**.

5. Rainfall Losses

Rainfall losses, which consist of surface retention loss and infiltration loss, were computed from the Green-Ampt method. The parameter estimation for the Green-Ampt method is discussed below and summarized in **Appendices A.3 and B.3**.

Surface Retention Loss - The surface retention loss (IA) for each soil group was estimated on the basis of land use pattern and soil slopes obtained from **Reference 4**, as well as the criteria given in Table 4.1 of the Manual.

Percent of Outcrop - The weighted value of percent of rock outcrop (RTIMP) for each subarea was computed according to the information obtained from **Reference 4**. A spreadsheet program supplied by the District was used for calculating the effect of each soil type.

Infiltration Loss - The three parameters as coded in HEC-1 for infiltration loss are:

- Hydraulic conductivity at natural saturation (XKSAT)
- Wetting front capillary suction (PSIF)
- Volumetric soil moisture deficit (DTHETA)

The parameter values for various soil groups were taken from Table 4.2 of the Manual and computed by the District spreadsheet program. A comparison of the values obtained from the two sources yielded slight differences for PSIF and DTHETA. At the direction of the District, the values generated by their spreadsheet program were used. Weighted values of these parameters were computed for all the subareas for both the current and future development conditions. However, only the values for future development conditions were used in the modeling.

The selection of DTHETA was based on the dry antecedent soil moisture condition for open and/or unzoned areas and the normal antecedent soil moisture condition for all zoned areas. In addition, values for XKSAT were adjusted according to the vegetation cover. A 30 percent vegetation cover was used for most undeveloped and low density residential areas. Areas that are on the steep slopes or have other zoning designations have been assigned with other percentage of vegetation cover based upon aerial photography of the specific area.

6. Unit Hydrograph and Time of Concentration

The Clark unit hydrograph was used in the computation of peak discharges in this study because all the subareas are less than 5 square miles in size. The Clark unit hydrograph consists of three parameters:

- Time of Concentration
- Storage Coefficient
- Time-Area Relation

Time of Concentration - The Papadakis method was used for estimating the time of concentration. It is a function of length and slope of the flow path, average rainfall intensity, and the watershed resistance coefficient, which is a function of watershed type and size. Values of these parameters are shown in **Appendices A.1 and B.1**. The length and slope of the flow path for each subarea were obtained from the topographic map **(Reference 2)**. A slope adjustment procedure for slopes greater than 200 feet per mile was implemented for several subareas in the watershed. This procedure was based on Figure 5.4 of the Manual. The rainfall intensity for each subarea was automatically computed by the MCUHP1

computer program. The values for resistance coefficient were determined from Table 5.1 of the Manual.

Storage Coefficient and Time-Area Relation - The storage coefficient is a function of time of concentration, the watershed size and the length of flow path. The time-area relation is a parameter showing the equal travel-time zones in a watershed.

The computation for time of concentration, storage coefficient and time-area relation was performed by means of trial-and-error method through the computer program of MCUHP1. The input and output values (including the ordinates of Clark unit hydrographs) are presented in **Appendices A.3 and B.3** of this report. A review of the results indicated that all areas are suitable for the Clark method.

7. Runoff Modeling without the Proposed Lakes

The 1991 version of HEC-1 computer program **(Reference 3)** was used for the estimation of storm runoff. A duration of 6 hours was used for all storms with various frequencies. A time step of 2 minutes was used in the computation. Flows through the existing culverts were modeled by the level-pool reservoir routing method, as contained in the HEC-1 program. The relationships among stage, storage, and outflow at the existing culverts were developed from the 1" = 200' topographic map **(Reference 2)**. The normal depth routing method was used for routing flow from one concentration point to the next.

The channel cross-sections used for normal depth routing were either digitized from the topographic base map in the case that the coincided with the location of a hydraulic analysis cross-section, or were plotted by hand from the topographic base map. Schematic flow chart of the runoff model is presented in Figure 1. Results of runoff modeling without the consideration of proposed lakes are summarized in Table 2. Outputs of the HEC-1 runs for various storms up to 100-year frequency are presented in **Appendices D.1 through D.4**.

TABLE 2
ESTIMATED PEAK FLOWS (WITHOUT PROPOSED LAKES)

Location	Estimated Peak Flow (cfs)				
	10-yr	25-yr	50-yr	100-yr	1/2 PMF
At Concentration Pt. CHK2 (at the Site of Lake 28-3)	335	422	478	514	1294
At Concentration Pt. CER7 (off the Site of Lake 27-1)	1734	2310	2638	2860	8357

The estimation of 1/2 PMF was based on the input of the full PMP with a 50 percent reduction of all hydrograph ordinates. The "FLOW" option on the JR card was used in the HEC-1 program to expedite the computation. Results of the estimated 1/2 PMF are also shown in Table 2, while the HEC-1 output for the 1/2 PMF is presented in **Appendix D.5**.

8. Runoff Modeling With the Proposed Lakes

The same procedure as described in the previous section was used for runoff modeling with the proposed lakes in place. The subareas that would be affected by the lakes were modified as follows:

- Subarea 127C was divided into Subareas 127C1 and 127C2 to reflect the existence of lake 28-8.

- The sizes of Subarea 120M, 120N, and 120L were reduced, and a new subarea (designated as L27-1) was created to reflect the existence of Lake 27-1.

Because the inflow to Lake 28-6 would be solely from Subarea 127I, Subareas 127E, 127F, and 127G were directly routed to Concentration Point CAP5 for bypassing Lake 28-6. In addition, the routing path from Concentration Points CER7A to CER7 was redirected to CER6 to reflect the proposed 48-inch pipe to be installed on the west side of Lake 27-1. The detailed location of the 48-inch pipe is shown on the Anderson-Nelson's plans **(Reference 7)**. The revised schematic flow chart for runoff modeling with the proposed lakes is presented in Figure 2.

In those subareas where portions of the land surface would be inundated by the lakes, the model input parameters were revised to reflect the change of land use. A new set of input parameters for runoff modeling with the proposed lakes in place is presented in **Appendix B**.

The elevation-area-storage relations for the six lakes were furnished by Anderson-Nelson, Inc. and are included in **Appendix E.1.** The spillway elevation-discharge relations for each lake (as shown in **Appendix E.2**) were derived from the critical-flow formula, based on the spillway dimensions furnished by Anderson-Nelson, Inc. The initial lake surface was assumed to be at the design high-water level of the lake.

Results of the estimated 100-year peak flow and 1/2 PMF at each lake are summarized in Table 3. The HEC-1 outputs are included in **Appendix F**. Each lake appears to be able to retain the 100-year flow. Lake 27-1 appears to be capable of retaining the 1/2 PMF without spilling, while Lake 28-3 would have 601 cfs discharging through the spillway when subject to a 1/2 PMF.

As shown in the HEC-1 output printouts (**APPENDICES F.1 and F.2**), the estimated 100-year 24-hour peak flow and 1/2 PMF at Concentration Point CER7 (which is located just off the site of Lake 27-1) are 2231 cfs and 6326, respectively.

TABLE 3
ESTIMATED PEAK FLOWS (WITH PROPOSED LAKES IN PLACE)

Lake No.	Reference Points in HEC-1 Model	100-yr 24 hr Peak Flow (cfs)		1/2 PMF (cfs)	
		Inflow	Outflow	Inflow	Outflow
* 27-1	LAKE/SLAKE	117	0	398	0
28-2	124A/L28-2	123	0	424	202
* 28-3	CHK2/L28-3	386	0	1314	601
28-6	127I/L28-6	17	0	58	0
28-7	CAP1/L28-7	118	0	473	281
28-8	127C1/L28-8	54	0	212	108

*Jurisdictional Lakes

REFERENCES

1. Flood Control District of Maricopa County, *Hydrologic Design Manual for Maricopa County, Arizona, Vol. I-Hydrology*, Undated.

2. Kenney Aerial Mapping, Inc., *Topographic Maps for the Town of Fountain Hills, Scale 1" = 200', Contour Interval = 2 feet,* 1991.

3. U.S. Department of the Army, Corps of Engineers, Hydrologic Engineering Center, *Generalized Computer Program 723-X6-L2010, HEC-1 flood hydrograph Package,* Davis, California, February 1981, Revised May 1991.

4. U.S. Department of Agriculture, Soil Conservation Service, *Soil Survey of Aguila-Carefree Area,* April 1986.

5. U.S. Department of Commerce, national Oceanic and Atmospheric Administration, National Weather Service, *Precipitation-Frequency Atlas of the Western United States, Volume VIII - Arizona,* 1973.

6. U.S. Department of Commerce, National Oceanic and Atmospheric Administration, *Probable Maximum Precipitation Estimates, Colorado River and Great Basin Drainages,* Hydrometeorological Report No. 49, September 1977.

7. Anderson-Nelson, Inc., *Fountain Hills, Arizona - Effluent Lakes Plan*, September 2, 1994.

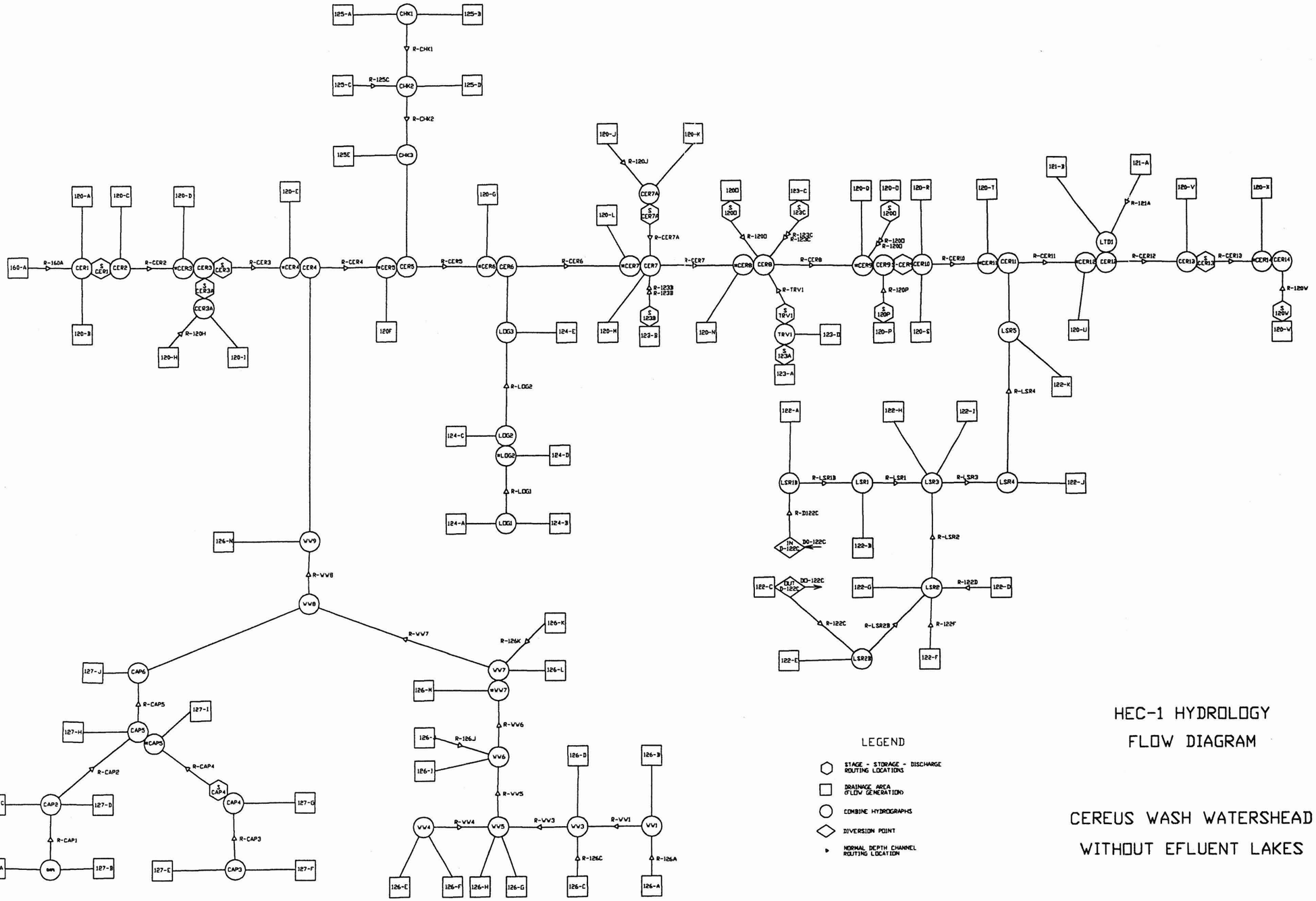

HEC-1 HYDROLOGY
FLOW DIAGRAM

CEREUS WASH WATERSHEAD
WITHOUT EFLUENT LAKES

FIGURE 1

ENGINEERS, INC.
2255 NORTH 44TH STREET, SUITE 330
PHOENIX, ARIZONA 85008
TELEPHONE (602) 244-2566

DESIGN	HAA	
DRAWN	JDS	
CHECKED	SEK	
REVISIONS:		

FOUNTAIN HILLS
EFFLUENT LAKES HYDROLOGY

FLOW DIAGRAM FOR CEREUS WASH

FILE: FH-120FD.DWG DATE: 12/01/94

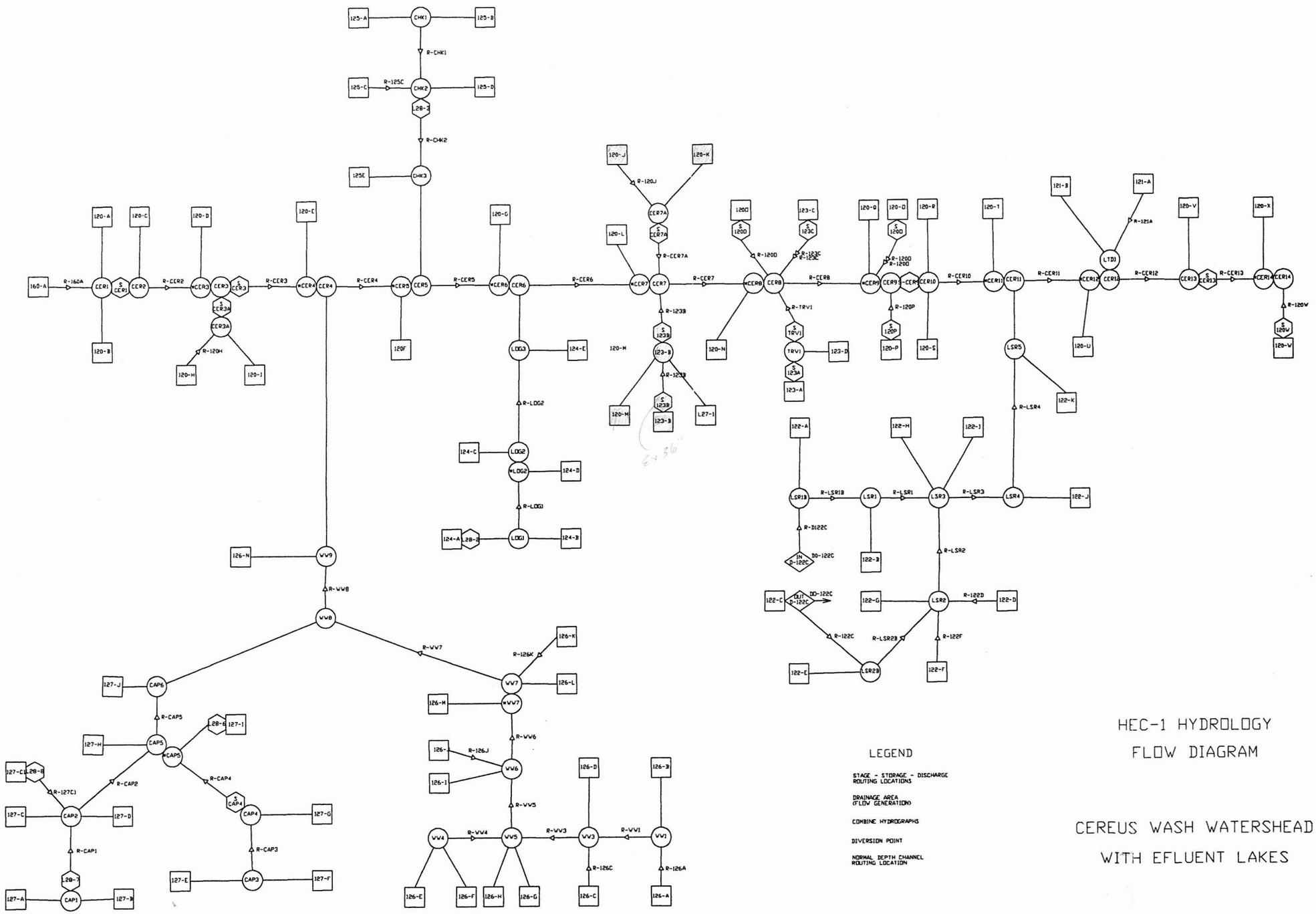

HEC-1 HYDROLOGY
FLOW DIAGRAM

CEREUS WASH WATERSHEAD
WITH EFLUENT LAKES

FIGURE 2

ENGINEERS, INC.
2255 NORTH 44TH STREET, SUITE 330
PHOENIX, ARIZONA 85008
TELEPHONE (602) 244-2566

DESIGN	HAA
DRAWN	JDS
CHECKED	SEK
REVISIONS:	

FOUNTAIN HILLS
EFFLUENT LAKES HYDROLOGY

FLOW DIAGRAM FOR CEREUS WASH

FILE: AN-12OFD.DWG DATE: 12/01/94

APPENDIX A

SUMMARY OF MODEL INPUT PARAMETERS WITHOUT PROPOSED LAKES

APPENDIX A.1

WATERSHED PARAMETERS

CEREUS WASH WATERSHED (120)

BASIN NUMBER	Set #	BASIN AREA		BASIN LENGTH		BASIN ELEVATION			SLOPE		ADJ. Ft/Mi	Land Type	Kb
		Acres	Sq. Miles	Feet	Miles	Highest	Lowest	Change	Ft/Ft	Ft/Mi			
120A	131	10.17	0.016	2575	0.49	1902	1776	126	0.049	258.4	245	B	0.066
160A	134	3.71	0.006	700	0.13	1916	1879	37	0.053	279.1	256	B	0.072
120B	130	33.86	0.053	2475	0.47	1884	1754	130	0.053	277.3	255	C	0.112
120C	129	3.43	0.005	913	0.17	1832	1779	53	0.058	306.5	266	Comp.	0.086
120D	227	44.03	0.069	2965	0.56	1777	1690	87	0.029	154.9	-	B	0.057
120E	226	11.61	0.018	2475	0.47	1728	1654	74	0.030	157.9	-	B	0.065
120F	294	13.76	0.022	1675	0.32	1690	1634	56	0.033	176.5	-	B	0.064
120G	11	23.45	0.037	2025	0.38	1776	1617	159	0.079	414.6	290	C	0.116
120H	107	3.47	0.005	1613	0.31	1832	1758	74	0.046	242.2	235	B	0.073
120I	228	4.61	0.007	975	0.18	1763	1695	68	0.070	368.2	283	C	0.133
120J	230	3.60	0.006	1675	0.32	1763	1739	24	0.014	75.7	-	B	0.072
120K	295	21.51	0.034	2275	0.43	1755	1652	103	0.045	239.1	232	C	0.117
120L	37	23.22	0.036	2050	0.39	1780	1599	181	0.088	466.2	297	C	0.116
120M	N/S	25.60	0.040	3700	0.70	1710	1599	111	0.030	158.4	-	B	0.061
120N	39	28.26	0.044	2500	0.47	1599	1512	87	0.035	183.7	-	B	0.060
120O	288	5.06	0.008	700	0.13	1610	1592	18	0.026	135.8	-	B	0.070
120P	287	18.04	0.028	700	0.13	1685	1586	99	0.141	746.7	326	C	0.119
120Q	49	22.46	0.035	2150	0.41	1593	1552	41	0.019	100.7	-	B	0.061
120R	48	7.69	0.012	1713	0.32	1590	1560	30	0.018	92.5	-	B	0.068
120S	265	4.23	0.007	1125	0.21	1582	1560	22	0.020	103.3	-	B	0.071
120T	53	1.27	0.002	550	0.10	1566	1542	24	0.044	230.4	226	C	0.147
120U	51	12.06	0.019	1350	0.26	1574	1536	38	0.028	148.6	-	B	0.065
120V	52	6.43	0.010	1075	0.20	1610	1532	78	0.073	383.1	286	C	0.130
120W	286	3.51	0.005	440	0.08	1555	1541	14	0.032	168.0	-	B	0.073
120X	284	10.49	0.016	1070	0.20	1550	1518	32	0.030	157.9	-	B	0.066
121A	43	31.85	0.050	2775	0.53	1592	1549	43	0.015	81.8	-	B	0.059
121B	44	12.67	0.020	2300	0.44	1584	1536	48	0.021	110.2	-	B	0.065
122A	32	13.00	0.020	2525	0.48	1666	1591	75	0.030	156.8	-	B	0.065
122B	42	21.68	0.034	1688	0.32	1612	1571	41	0.024	128.2	-	B	0.062

BASIN NUMBER	Set #	BASIN AREA		BASIN LENGTH		BASIN ELEVATION			SLOPE		ADJ. Ft/Mi	Land Type	Kb
		Acres	Sq. Miles	Feet	Miles	Highest	Lowest	Change	Ft/Ft	Ft/Mi			
122C	31	9.22	0.014	1175	0.22	1797	1629	168	0.143	754.9	329	C	0.126
122D	33	20.47	0.032	1963	0.37	1628	1583	45	0.023	121.0	-	B	0.062
122E	30	20.48	0.032	1750	0.33	1772	1599	173	0.099	522.0	305	C	0.117
122F	40	6.56	0.010	1563	0.30	1689	1590	99	0.063	334.4	275	C	0.130
122G	41	14.09	0.022	1563	0.30	1610	1576	34	0.022	114.9	-	A	0.033
122H	46	3.94	0.006	863	0.16	1586	1562	24	0.028	146.8	-	B	0.072
122I	47	4.79	0.007	1013	0.19	1576	1562	14	0.014	73.0	-	B	0.071
122J	45	15.83	0.025	1963	0.37	1590	1554	36	0.018	96.8	-	B	0.064
122K	50	2.16	0.003	950	0.18	1554	1542	12	0.013	66.7	-	B	0.075
123A	291	47.98	0.075	2800	0.53	1745	1596	149	0.053	281.0	256	C	0.108
123B	New	11.89	0.019	1380	0.26	1745	1625	120	0.087	459.1	296	C	0.123
123C	New	2.19	0.003	360	0.07	1698	1618	80	0.222	1173.3	367	C	0.141
123D	289	6.49	0.010	2130	0.40	1744	1589	155	0.073	384.2	286	C	0.130
124A	18	45.33	0.071	3350	0.63	1970	1658	312	0.093	491.7	301	C	0.109
124B	14	27.36	0.043	1600	0.30	1788	1658	130	0.081	429.0	293	C	0.114
124C	17	12.92	0.020	1963	0.37	1774	1646	128	0.065	344.3	277	C	0.122
124D	13	5.77	0.009	1050	0.20	1746	1646	100	0.095	502.9	303	C	0.131
124E	12	32.74	0.051	2338	0.44	1814	1617	197	0.084	444.9	295	C	0.112
125A	19	49.55	0.077	3825	0.72	1968	1686	282	0.074	389.3	287	C	0.108
125B	5	72.25	0.113	3875	0.73	1875	1686	189	0.049	257.5	243	C	0.104
125C	15	19.24	0.030	1825	0.35	1812	1682	130	0.071	376.1	285	C	0.118
125D	22	11.33	0.018	1100	0.21	1686	1685	1	0.001	4.8	-	B	0.066
125E	10	29.86	0.047	2175	0.41	1685	1634	51	0.023	123.8	-	B	0.060
126A	?	4.19	0.007	1075	0.20	2010	1980	30	0.028	147.3	-	B	0.071
126B	148	13.34	0.021	2465	0.47	1987	1897	90	0.037	192.8	-	B	0.065
126C	297	90.75	0.142	5200	0.98	2110	1831	279	0.054	283.3	257	C	0.101
126D	140	18.16	0.028	1700	0.32	1924	1794	130	0.076	403.8	289	C	0.119
126E	296	57.87	0.090	2900	0.55	2080	1900	180	0.062	327.7	273	C	0.106

BASIN NUMBER	Set #	BASIN AREA Acres	BASIN AREA Sq. Miles	BASIN LENGTH Feet	BASIN LENGTH Miles	BASIN ELEVATION Highest	BASIN ELEVATION Lowest	BASIN ELEVATION Change	SLOPE Ft/Ft	SLOPE Ft/Mi	ADJ. Ft/Mi	Land Type	Kb
126F	145	35.21	0.055	2200	0.42	2150	1900	250	0.114	600.0	311	C	0.111
126G	144	86.87	0.136	4550	0.86	2140	1770	370	0.081	429.4	293	C	0.102
126H	139	12.74	0.020	1513	0.29	1909	1770	139	0.092	485.1	300	C	0.122
126I	138	52.28	0.082	2525	0.48	1888	1735	153	0.061	319.9	271	C	0.107
126J	133	1.59	0.002	800	0.15	1908	1887	21	0.026	138.6	-	B	0.077
126K	132	7.61	0.012	1900	0.36	1891	1788	103	0.054	286.2	259	B	0.068
126L	224	15.01	0.023	2050	0.39	1846	1724	122	0.060	314.2	269	C	0.121
126M	225	16.25	0.025	1900	0.36	1837	1712	125	0.066	347.4	278	C	0.120
126N	9	49.06	0.077	3550	0.67	1930	1654	276	0.078	410.5	290	C	0.108
127A	1	18.22	0.028	1900	0.36	1920	1764	156	0.082	433.5	293	C	0.118
127B	6	24.85	0.039	1800	0.34	1940	1764	176	0.098	516.3	305	C	0.115
127C	3	27.06	0.042	2063	0.39	1878	1734	144	0.070	368.6	283	C	0.114
127D	2	15.51	0.024	1575	0.30	1852	1734	118	0.075	395.6	288	C	0.120
127E	221	66.11	0.103	3500	0.66	2080	1776	304	0.087	458.6	296	C	0.104
127F	223	93.91	0.147	4300	0.81	2160	1776	384	0.089	471.5	297	C	0.101
127G	222	36.34	0.057	2138	0.40	1906	1746	160	0.075	395.1	288	C	0.111
127H	4	11.26	0.018	1425	0.27	1940	1725	215	0.151	796.6	329	C	0.124
127I	7	6.59	0.010	1875	0.36	1835	1725	110	0.059	309.8	269	B	0.069
127J	8	20.56	0.032	2075	0.39	1942	1700	242	0.117	615.8	313	C	0.117
TOTAL	76	1678.47	2.623										

APPENDIX A.2

SOIL PROPERTIES

Soil Properties
Green-Ampt Method

CEREUS WASH WATERSHED W/O LAKES
* Note - DTHETA and IA are Land Use weighted values

Sub-Area	Area (acres)	Area (sq. mi.)	Soil Type Number	Soil Type Percent	XKSAT (in/hr)	PSIF (in)	DTHETA (in)	RTIMP (%)	IA (in)
120A	10.17	0.016	40	10.72%	0.17			0.00%	
			41	89.28%	0.17			0.00%	
			TOTAL	100.00%	0.17	5.70	0.25	0.00%	0.100
160A	3.71	0.006	41	100.00%	0.17	5.70	0.25	0.00%	0.100
120B	33.86	0.053	40	15.77%	0.17			0.00%	
			41	84.23%	0.17			0.00%	
			TOTAL	100.00%	0.17	5.70	0.25	0.00%	0.150
120C	3.43	0.005	40	100.00%	0.17	5.70	0.25	0.00%	0.100
120D	44.03	0.069	40	74.99%	0.17			0.00%	
			61	25.01%	0.15			0.00%	
			TOTAL	100.00%	0.16	5.80	0.25	0.00%	0.132
120E	11.61	0.018	40	42.81%	0.17			0.00%	
			61	57.19%	0.15			0.00%	
			TOTAL	100.00%	0.16	5.80	0.25	0.00%	0.050
120F	13.76	0.022	40	46.88%	0.17			0.00%	
			63	53.13%	0.14			25.00%	
			TOTAL	100.00%	0.15	6.00	0.25	13.28%	0.050
120G	23.45	0.037	63	68.91%	0.14			25.00%	
			96	31.09%	0.07			0.00%	
			TOTAL	100.00%	0.11	6.80	0.17	17.23%	0.150
120H	3.47	0.005	40	49.57%	0.17			0.00%	
			61	50.43%	0.15			0.00%	
			TOTAL	100.00%	0.16	5.80	0.25	0.00%	0.085
120I	4.61	0.007	40	77.22%	0.17			0.00%	
			61	22.78%	0.15			0.00%	
			TOTAL	100.00%	0.17	5.70	0.25	0.00%	0.150
120J	3.60	0.006	40	100.00%	0.17	5.70	0.25	0.00%	0.100
120K	21.51	0.034	40	100.00%	0.17	5.70	0.25	0.00%	0.150
120L	23.22	0.036	63	56.63%	0.14			25.00%	
			96	43.37%	0.07			0.00%	
			TOTAL	100.00%	0.10	7.00	0.15	14.16%	0.150
120M	25.60	0.040	40	69.53%	0.17			0.00%	
			63	30.47%	0.14			25.00%	
			TOTAL	100.00%	0.16	5.80	0.25	76.20%	0.100

Sub-Area	Area (acres)	Area (sq. mi.)	Soil Type Number	Soil Type Percent	XKSAT (in/hr)	PSIF (in)	DTHETA (in)	RTIMP (%) Current	IA (in)
120N	28.26	0.044	40	23.50%	0.17			0.00%	
			63	24.20%	0.14			25.00%	
			96	52.30%	0.07			0.00%	
			TOTAL	100.00%	0.10	7.00	0.15	6.05%	0.136
120O	5.06	0.008	40	100.00%	0.17	5.70	0.25	0.00%	0.100
120P	18.04	0.028	40	100.00%	0.17	5.70	0.25	0.00%	0.150
120Q	22.46	0.035	40	8.86%	0.17			0.00%	
			61	38.74%	0.15			0.00%	
			96	52.40%	0.07			0.00%	
			TOTAL	100.00%	0.10	7.00	0.15	0.00%	0.138
120R	7.69	0.012	61	100.00%	0.15	6.00	0.25	0.00%	0.140
120S	4.23	0.007	40	5.20%	0.17			0.00%	
			96	94.80%	0.07			0.00%	
			TOTAL	100.00%	0.07	8.00	0.15	0.00%	0.054
120T	1.27	0.002	61	7.87%	0.15			0.00%	
			96	92.13%	0.07			0.00%	
			TOTAL	100.00%	0.07	8.00	0.15	0.00%	0.150
120U	12.06	0.019	61	56.97%	0.15			0.00%	
			96	43.03%	0.07			0.00%	
			TOTAL	100.00%	0.11	6.80	0.17	0.00%	0.011
120V	6.43	0.010	61	75.27%	0.15			0.00%	
			96	24.73%	0.07			0.00%	
			TOTAL	100.00%	0.12	6.60	0.19	0.00%	0.150
120W	3.51	0.005	61	100.00%	0.15	6.00	0.25	0.00%	0.147
120X	10.49	0.016	61	24.88%	0.15			0.00%	
			96	75.12%	0.07			0.00%	
			TOTAL	100.00%	0.08	7.60	0.15	0.00%	0.117
121A	31.85	0.050	61	100.00%	0.15	6.00	0.25	0.00%	0.150
121B	12.67	0.020	61	100.00%	0.15	6.00	0.25	0.00%	0.150
122A	13.00	0.020	61	100.00%	0.15	6.00	0.25	0.00%	0.115
122B	21.68	0.034	61	100.00%	0.15	6.00	0.25	0.00%	0.110
122C	9.22	0.014	61	56.18%	0.15			0.00%	
			63	43.82%	0.14			25.00%	
			TOTAL	100.00%	0.15	6.00	0.25	10.95%	0.150
122D	20.47	0.032	61	100.00%	0.15	6.00	0.25	0.00%	0.150
122E	20.48	0.032	61	57.67%	0.15			0.00%	
			63	42.33%	0.14			25.00%	
			TOTAL	100.00%	0.15	6.00	0.25	10.58%	0.144

Sub-Area	Area (acres)	Area (sq. mi.)	Soil Type Number	Soil Type Percent	XKSAT (in/hr)	PSIF (in)	DTHETA (in)	RTIMP (%) Current	IA (in)
122F	6.56	0.010	61	18.29%	0.15			0.00%	
			63	81.71%	0.14			25.00%	
			TOTAL	100.00%	0.15	6.20	0.23	20.43%	0.150
122G	14.09	0.022	61	100.00%	0.15	6.00	0.25	0.00%	0.100
122H	3.94	0.006	61	100.00%	0.15	6.00	0.25	0.00%	0.150
122I	4.79	0.007	61	100.00%	0.15	6.00	0.25	0.00%	0.150
122J	15.83	0.025	61	100.00%	0.15	6.00	0.25	0.00%	0.150
122K	2.16	0.003	61	86.11%	0.15			0.00%	
			96	13.89%	0.07			0.00%	
			TOTAL	100.00%	0.13	6.40	0.21	0.00%	0.134
123A	47.98	0.075	40	100.00%	0.17	5.70	0.25	0.00%	0.150
123B	11.89	0.019	40	100.00%	0.17	5.70	0.25	0.00%	0.150
123C	2.19	0.003	40	100.00%	0.17	5.70	0.25	0.00%	0.150
123D	6.49	0.010	40	100.00%	0.17	5.70	0.25	0.00%	0.100
124A	45.33	0.071	61	16.68%	0.15			0.00%	
			63	11.27%	0.14			25.00%	
			72	72.05%	0.09			30.00%	
			TOTAL	100.00%	0.10	7.00	0.15	24.43%	0.150
124B	27.36	0.043	61	16.26%	0.15			0.00%	
			63	31.98%	0.14			25.00%	
			72	51.75%	0.09			30.00%	
			TOTAL	100.00%	0.11	6.80	0.17	23.52%	0.150
124C	12.92	0.020	61	28.79%	0.15			0.00%	
			63	71.21%	0.14			25.00%	
			TOTAL	100.00%	0.14	6.20	0.23	17.80%	0.150
124D	5.77	0.009	61	36.05%	0.15			0.00%	
			63	63.95%	0.14			25.00%	
			TOTAL	100.00%	0.14	6.20	0.23	15.99%	0.150
124E	32.74	0.051	61	10.17%	0.15			0.00%	
			63	83.57%	0.14			25.00%	
			96	6.26%	0.07			0.00%	
			TOTAL	100.00%	0.13	6.40	0.21	20.89%	0.150
125A	49.55	0.077	72	100.00%	0.09	7.30	0.15	30.00%	0.150
125B	72.25	0.113	63	5.90%	0.14			25.00%	
			72	94.10%	0.09			30.00%	
			TOTAL	100.00%	0.09	7.30	0.15	29.71%	0.150

Sub-Area	Area (acres)	Area (sq. mi.)	Soil Type Number	Soil Type Percent	XKSAT (in/hr)	PSIF (in)	DTHETA (in)	RTIMP (%) Current	IA (in)
125C	19.24	0.030	63	10.24%	0.14			25.00%	
			72	89.76%	0.09			30.00%	
			TOTAL	100.00%	0.09	7.30	0.15	29.49%	0.150
125D	11.33	0.018	63	81.73%	0.14			25.00%	
			72	18.27%	0.09			30.00%	
			TOTAL	100.00%	0.13	6.40	0.21	25.91%	0.100
125E	29.86	0.047	63	100.00%	0.14	6.20	0.23	25.00%	0.150
126A	4.19	0.007	41	100.00%	0.17	5.70	0.25	0.00%	0.100
126B	13.34	0.021	41	100.00%	0.17	5.70	0.25	0.00%	0.100
126C	90.75	0.142	41	100.00%	0.17	5.70	0.32	0.00%	0.140
126D	18.16	0.028	41	100.00%	0.17	5.70	0.25	0.00%	0.146
126E	57.87	0.090	41	27.06%	0.17			0.00%	
			72	72.94%	0.09			30.00%	
			TOTAL	100.00%	0.11	6.80	0.36	21.88%	0.150
126F	35.21	0.055	72	100.00%	0.09	7.30	0.33	30.00%	0.150
126G	86.87	0.136	41	38.67%	0.17			0.00%	
			72	61.33%	0.09			30.00%	
			TOTAL	100.00%	0.12	6.60	0.24	18.40%	0.150
126H	12.74	0.020	41	100.00%	0.17	5.70	0.25	0.00%	0.127
126I	52.28	0.082	41	47.97%	0.17			0.00%	
			72	52.03%	0.09			30.00%	
			TOTAL	100.00%	0.12	6.60	0.19	15.61%	0.133
126J	1.59	0.002	41	100.00%	0.17	5.70	0.25	0.00%	0.100
126K	7.60	0.012	40	9.47%	0.17			0.00%	
			41	90.53%	0.17			0.00%	
			TOTAL	100.00%	0.17	5.70	0.25	0.00%	0.100
126L	15.01	0.023	40	3.13%	0.17			0.00%	
			61	75.08%	0.15			0.00%	
			72	21.79%	0.09			30.00%	
			TOTAL	100.00%	0.13	6.40	0.21	6.54%	0.150
126M	16.25	0.025	40	35.57%	0.17			0.00%	
			41	13.29%	0.17			0.00%	
			61	30.28%	0.15			0.00%	
			72	20.86%	0.09			30.00%	
			TOTAL	100.00%	0.14	6.20	0.23	6.26%	0.144

APPENDIX A.3

MCUHP1 PROGRAM INPUT/OUTPUT VALUES

MCUHP1 Program
Input Values

CEREUS WASH WATERSHED W/O LAKES

Sub-Area	AREA (sq. mi.)	LENGTH (miles)	Kb	SLOPE (ft/mile)	IA (in)	DTHETA	PSIF	XKSAT	RTIMP (%) Current	RTIMP (%) Future
120A	0.016	0.490	0.066	245.00	0.100	0.250	5.70	0.170	31.50	45.00
160A	0.006	0.130	0.072	256.00	0.100	0.250	5.70	0.170	40.50	45.00
120B	0.053	0.470	0.112	255.00	0.150	0.250	5.70	0.207	9.00	45.00
120C	0.005	0.170	0.086	266.00	0.100	0.250	5.70	0.170	34.30	41.33
120D	0.069	0.560	0.057	154.90	0.132	0.250	5.80	0.187	5.81	24.21
120E	0.018	0.470	0.065	157.90	0.050	0.250	5.80	0.160	13.96	20.53
120F	0.022	0.320	0.064	176.50	0.150	0.250	6.00	0.183	12.46	34.96
120G	0.037	0.380	0.116	290.00	0.150	0.170	6.80	0.134	12.92	37.92
120H	0.005	0.310	0.073	235.00	0.085	0.250	5.80	0.160	30.91	39.12
120I	0.007	0.180	0.133	283.00	0.150	0.250	5.70	0.207	10.00	25.00
120J	0.006	0.320	0.072	75.70	0.100	0.250	5.70	0.170	15.00	25.00
120K	0.034	0.430	0.117	232.00	0.150	0.250	5.70	0.207	11.25	25.00
120L	0.036	0.390	0.116	297.00	0.150	0.150	7.00	0.122	5.55	66.32
120M	0.040	0.700	0.061	158.40	0.100	0.250	5.80	0.186	19.93	43.85
120N	0.044	0.470	0.060	183.70	0.136	0.150	7.00	0.117	11.44	69.71
120O	0.008	0.130	0.070	135.80	0.100	0.250	5.70	0.189	10.00	25.00
120P	0.028	0.130	0.119	326.00	0.150	0.250	5.70	0.198	7.50	25.00
120Q	0.035	0.410	0.061	100.70	0.138	0.150	7.00	0.118	11.72	68.92
120R	0.012	0.320	0.068	92.50	0.140	0.250	6.00	0.178	4.61	76.82
120S	0.007	0.210	0.071	103.30	0.054	0.150	8.00	0.070	33.28	49.67
120T	0.002	0.100	0.147	226.00	0.150	0.150	8.00	0.085	0.00	80.75
120U	0.019	0.260	0.065	148.60	0.011	0.170	6.80	0.128	13.23	63.01
120V	0.010	0.200	0.130	286.00	0.150	0.190	6.60	0.146	0.99	19.82
120W	0.005	0.080	0.073	168.00	0.147	0.250	6.00	0.181	3.01	16.71
120X	0.016	0.200	0.066	157.90	0.117	0.150	7.60	0.092	24.24	73.46
121A	0.050	0.530	0.059	81.80	0.150	0.250	6.00	0.175	6.00	15.00
121B	0.020	0.440	0.065	110.20	0.150	0.250	6.00	0.175	10.98	15.91
122A	0.020	0.480	0.065	156.80	0.115	0.250	6.00	0.162	8.20	43.16
122B	0.034	0.320	0.062	128.20	0.110	0.250	6.00	0.162	31.04	77.60
122C	0.014	0.220	0.126	329.00	0.150	0.250	6.00	0.163	11.32	42.10
122D	0.032	0.370	0.062	121.00	0.150	0.250	6.00	0.183	1.48	37.09
122E	0.032	0.330	0.117	305.00	0.144	0.250	6.00	0.168	12.39	57.93
122F	0.010	0.300	0.130	275.00	0.150	0.230	6.20	0.171	20.11	80.11

Sub-Area	AREA (sq. mi.)	LENGTH (miles)	Kb	SLOPE (ft/mile)	IA (in)	DTHETA	PSIF	XKSAT	RTIMP (%) Current	RTIMP (%) Future
122G	0.022	0.300	0.033	114.90	0.100	0.250	6.00	0.158	64.50	75.00
122H	0.006	0.160	0.072	146.80	0.150	0.250	6.00	0.181	16.13	73.32
122I	0.007	0.190	0.071	73.00	0.150	0.250	6.00	0.175	14.25	75.00
122J	0.025	0.370	0.064	96.80	0.150	0.250	6.00	0.183	19.78	38.78
122K	0.003	0.180	0.075	66.70	0.134	0.210	6.40	0.152	9.67	56.90
123A	0.075	0.530	0.108	256.00	0.150	0.250	5.70	0.207	5.00	25.00
123B	0.019	0.260	0.123	296.00	0.150	0.250	5.70	0.207	6.25	25.00
123C	0.003	0.070	0.141	367.00	0.150	0.250	5.70	0.207	3.75	25.00
123D	0.010	0.400	0.130	286.00	0.100	0.250	5.70	0.189	11.25	25.00
124A	0.071	0.630	0.109	301.00	0.150	0.150	7.00	0.122	20.64	36.17
124B	0.043	0.300	0.114	301.00	0.150	0.170	6.80	0.134	19.01	38.18
124C	0.020	0.370	0.122	277.00	0.150	0.230	6.20	0.171	17.24	43.54
124D	0.009	0.370	0.122	277.00	0.150	0.230	6.20	0.171	9.35	50.84
124E	0.051	0.440	0.112	295.00	0.150	0.210	6.40	0.159	13.43	49.15
125A	0.077	0.720	0.108	287.00	0.150	0.150	7.30	0.110	25.50	40.50
125B	0.113	0.730	0.104	243.00	0.150	0.150	7.30	0.110	25.25	40.25
125C	0.030	0.350	0.118	285.00	0.150	0.150	7.30	0.110	25.06	40.06
125D	0.018	0.210	0.066	4.80	0.100	0.210	6.40	0.159	22.03	37.03
125E	0.047	0.410	0.060	123.80	0.150	0.230	6.20	0.171	19.18	42.46
126A	0.007	0.200	0.071	147.30	0.100	0.250	5.70	0.170	27.00	45.00
126B	0.021	0.470	0.065	192.80	0.100	0.250	5.70	0.179	22.50	45.00
126C	0.142	0.980	0.101	257.00	0.140	0.320	5.70	0.204	1.24	13.77
126D	0.028	0.320	0.119	289.00	0.146	0.250	5.70	0.204	3.24	23.16
126E	0.090	0.550	0.106	273.00	0.150	0.360	6.80	0.134	21.88	21.88
126F	0.055	0.420	0.111	311.00	0.150	0.330	7.30	0.110	30.00	30.00
126G	0.136	0.860	0.102	293.00	0.500	0.240	6.60	0.146	16.34	27.55
126H	0.020	0.290	0.122	300.00	0.127	0.250	5.70	0.199	9.76	28.71
126I	0.082	0.480	0.107	271.00	0.133	0.190	6.60	0.144	14.10	38.28
126J	0.002	0.150	0.077	138.60	0.100	0.250	5.70	0.179	22.50	45.00
126K	0.012	0.360	0.068	259.00	0.100	0.250	5.70	0.179	27.00	45.00
126L	0.023	0.390	0.121	269.00	0.150	0.210	6.40	0.159	9.42	38.36
126M	0.025	0.360	0.120	278.00	0.144	0.230	6.20	0.169	7.63	25.37
126N	0.077	0.670	0.108	290.00	0.150	0.230	6.20	0.171	12.26	27.92

Sub-Area	AREA (sq. mi.)	LENGTH (miles)	Kb	SLOPE (ft/mile)	IA (in)	DTHETA	PSIF	XKSAT	RTIMP (%) Current	RTIMP (%) Future
127A	0.028	0.360	0.118	293.00	0.150	0.250	5.70	0.207	0.00	15.00
127B	0.039	0.340	0.115	305.00	0.100	0.250	5.70	0.189	4.50	15.00
127C	0.042	0.390	0.114	283.00	0.150	0.170	6.80	0.134	18.71	33.71
127D	0.024	0.300	0.120	288.00	0.150	0.250	5.80	0.195	1.50	15.00
127E	0.103	0.660	0.104	296.00	0.150	0.204	6.80	0.134	16.73	28.41
127F	0.147	0.810	0.101	297.00	0.150	0.229	7.30	0.110	25.52	40.45
127G	0.057	0.400	0.111	288.00	0.150	0.150	7.00	0.122	19.75	45.57
127H	0.018	0.270	0.124	329.00	0.150	0.150	7.00	0.122	21.74	36.74
127I	0.010	0.360	0.069	269.00	0.100	0.250	6.00	0.158	9.00	15.00
127J	0.032	0.390	0.117	313.00	0.100	0.170	6.80	0.122	16.06	31.06

APPENDIX B

SUMMARY OF MODEL INPUT PARAMETERS WITH PROPOSED LAKES IN PLACE

APPENDIX B.1

WATERSHED PARAMETERS

CEREUS WASH WATERSHED (120) WITH LAKES

BASIN NUMBER	Set #	BASIN AREA		BASIN LENGTH		BASIN ELEVATION			SLOPE		ADJ. Ft/Mi	Land Type	Kb
		Acres	Sq. Miles	Feet	Miles	Highest	Lowest	Change	Ft/Ft	Ft/Mi			
120A	131	10.17	0.016	2575	0.49	1902	1776	126	0.049	258.4	245	B	0.066
160A	134	3.71	0.006	700	0.13	1916	1879	37	0.053	279.1	256	B	0.072
120B	130	33.86	0.053	2475	0.47	1884	1754	130	0.053	277.3	255	C	0.112
120C	129	3.43	0.005	913	0.17	1832	1779	53	0.058	306.5	266	Comp.	0.086
120D	227	44.03	0.069	2965	0.56	1777	1690	87	0.029	154.9	-	B	0.057
120E	226	11.61	0.018	2475	0.47	1728	1654	74	0.030	157.9	-	B	0.065
120F	294	13.76	0.022	1675	0.32	1690	1634	56	0.033	176.5	-	B	0.064
120G	11	23.45	0.037	2025	0.38	1776	1617	159	0.079	414.6	290	C	0.116
120H	107	3.47	0.005	1613	0.31	1832	1758	74	0.046	242.2	235	B	0.073
120I	228	4.61	0.007	975	0.18	1763	1695	68	0.070	368.2	283	C	0.133
120J	230	3.60	0.006	1675	0.32	1763	1739	24	0.014	75.7	-	B	0.072
120K	295	21.51	0.034	2275	0.43	1755	1652	103	0.045	239.1	232	C	0.117
120L	37	20.48	0.032	2050	0.39	1780	1599	181	0.088	466.2	297	C	0.117
120M	N/S	18.56	0.029	2400	0.45	1710	1630	80	0.033	176.0	-	B	0.063
120N	39	27.52	0.043	2500	0.47	1599	1512	87	0.035	183.7	-	B	0.060
120O	288	5.06	0.008	700	0.13	1610	1592	18	0.026	135.8	-	B	0.070
120P	287	18.04	0.028	700	0.13	1685	1586	99	0.141	746.7	326	C	0.119
120Q	49	22.46	0.035	2150	0.41	1593	1552	41	0.019	100.7	-	B	0.061
120R	48	7.69	0.012	1713	0.32	1590	1560	30	0.018	92.5	-	B	0.068
120S	265	4.23	0.007	1125	0.21	1582	1560	22	0.020	103.3	-	B	0.071
120T	53	1.27	0.002	550	0.10	1566	1542	24	0.044	230.4	226	C	0.147
120U	51	12.06	0.019	1350	0.26	1574	1536	38	0.028	148.6	-	B	0.065
120V	52	6.43	0.010	1075	0.20	1610	1532	78	0.073	383.1	286	C	0.130
120W	286	3.51	0.005	440	0.08	1555	1541	14	0.032	168.0	-	B	0.073
120X	284	10.49	0.016	1070	0.20	1550	1518	32	0.030	157.9	-	B	0.066
121A	43	31.85	0.050	2775	0.53	1592	1549	43	0.015	81.8	-	B	0.059
121B	44	12.67	0.020	2300	0.44	1584	1536	48	0.021	110.2	-	B	0.065
122A	32	13.00	0.020	2525	0.48	1666	1591	75	0.030	156.8	-	B	0.065
122B	42	21.68	0.034	1688	0.32	1612	1571	41	0.024	128.2	-	B	0.062

BASIN NUMBER	Set #	BASIN AREA		BASIN LENGTH		BASIN ELEVATION			SLOPE		ADJ. Ft/Mi	Land Type	Kb
		Acres	Sq. Miles	Feet	Miles	Highest	Lowest	Change	Ft/Ft	Ft/Mi			
122C	31	9.22	0.014	1175	0.22	1797	1629	168	0.143	754.9	329	C	0.126
122D	33	20.47	0.032	1963	0.37	1628	1583	45	0.023	121.0	-	B	0.062
122E	30	20.48	0.032	1750	0.33	1772	1599	173	0.099	522.0	305	C	0.117
122F	40	6.56	0.010	1563	0.30	1689	1590	99	0.063	334.4	275	C	0.130
122G	41	14.09	0.022	1563	0.30	1610	1576	34	0.022	114.9	-	A	0.033
122H	46	3.94	0.006	863	0.16	1586	1562	24	0.028	146.8	-	B	0.072
122I	47	4.79	0.007	1013	0.19	1576	1562	14	0.014	73.0	-	B	0.071
122J	45	15.83	0.025	1963	0.37	1590	1554	36	0.018	96.8	-	B	0.064
122K	50	2.16	0.003	950	0.18	1554	1542	12	0.013	66.7	-	B	0.075
123A	291	47.98	0.075	2800	0.53	1745	1596	149	0.053	281.0	256	C	0.108
123B	New	11.89	0.019	1380	0.26	1745	1625	120	0.087	459.1	296	C	0.123
123C	New	2.19	0.003	360	0.07	1698	1618	80	0.222	1173.3	367	C	0.141
123D	289	6.49	0.010	2130	0.40	1744	1589	155	0.073	384.2	286	C	0.130
124A	18	45.33	0.071	3350	0.63	1970	1658	312	0.093	491.7	301	C	0.109
124B	14	27.36	0.043	1600	0.30	1788	1658	130	0.081	429.0	293	C	0.114
124C	17	12.92	0.020	1963	0.37	1774	1646	128	0.065	344.3	277	C	0.122
124D	13	5.77	0.009	1050	0.20	1746	1646	100	0.095	502.9	303	C	0.131
124E	12	32.74	0.051	2338	0.44	1814	1617	197	0.084	444.9	295	C	0.112
125A	19	49.55	0.077	3825	0.72	1968	1686	282	0.074	389.3	287	C	0.108
125B	5	72.25	0.113	3875	0.73	1875	1686	189	0.049	257.5	243	C	0.104
125C	15	19.24	0.030	1825	0.35	1812	1682	130	0.071	376.1	285	C	0.118
125D	22	11.33	0.018	1100	0.21	1686	1685	1	0.001	4.8	-	B	0.066
125E	10	29.86	0.047	2175	0.41	1685	1634	51	0.023	123.8	-	B	0.060
126A	?	4.19	0.007	1075	0.20	2010	1980	30	0.028	147.3	-	B	0.071
126B	148	13.34	0.021	2465	0.47	1987	1897	90	0.037	192.8	-	B	0.065
126C	297	90.75	0.142	5200	0.98	2110	1831	279	0.054	283.3	257	C	0.101
126D	140	18.16	0.028	1700	0.32	1924	1794	130	0.076	403.8	289	C	0.119
126E	296	57.87	0.090	2900	0.55	2080	1900	180	0.062	327.7	273	C	0.106

BASIN NUMBER	Set #	BASIN AREA		BASIN LENGTH		BASIN ELEVATION			SLOPE		ADJ. Ft/Mi	Land Type	Kb
		Acres	Sq. Miles	Feet	Miles	Highest	Lowest	Change	Ft/Ft	Ft/Mi			
126F	145	35.21	0.055	2200	0.42	2150	1900	250	0.114	600.0	311	C	0.111
126G	144	86.87	0.136	4550	0.86	2140	1770	370	0.081	429.4	293	C	0.102
126H	139	12.74	0.020	1513	0.29	1909	1770	139	0.092	485.1	300	C	0.122
126I	138	52.28	0.082	2525	0.48	1888	1735	153	0.061	319.9	271	C	0.107
126J	133	1.59	0.002	800	0.15	1908	1887	21	0.026	138.6	-	B	0.077
126K	132	7.61	0.012	1900	0.36	1891	1788	103	0.054	286.2	259	B	0.068
126L	224	15.01	0.023	2050	0.39	1846	1724	122	0.060	314.2	269	C	0.121
126M	225	16.25	0.025	1900	0.36	1837	1712	125	0.066	347.4	278	C	0.120
126N	9	49.06	0.077	3550	0.67	1930	1654	276	0.078	410.5	290	C	0.108
127A	1	18.22	0.028	1900	0.36	1920	1764	156	0.082	433.5	293	C	0.118
127B	6	24.85	0.039	1800	0.34	1940	1764	176	0.098	516.3	305	C	0.115
127C1	3	18.04	0.028	1543	0.29	1878	1795	83	0.054	284.0	283	C	0.119
127C2	"	9.02	0.014	1162	0.22	1797	1734	63	0.054	286.3	283	C	0.126
127D	2	15.51	0.024	1575	0.30	1852	1734	118	0.075	395.6	288	C	0.120
127E	221	66.11	0.103	3500	0.66	2080	1776	304	0.087	458.6	296	C	0.104
127F	223	93.91	0.147	4300	0.81	2160	1776	384	0.089	471.5	297	C	0.101
127G	222	36.34	0.057	2138	0.40	1906	1746	160	0.075	395.1	288	C	0.111
127H	4	11.26	0.018	1425	0.27	1940	1725	215	0.151	796.6	329	C	0.124
127I	7	6.59	0.010	1875	0.36	1835	1725	110	0.059	309.8	269	B	0.069
127J	8	20.56	0.032	2075	0.39	1942	1700	242	0.117	615.8	313	C	0.117
TOTAL	77	1667.95	2.606										

APPENDIX B.2

SOIL PROPERTIES

Soil Properties
Green-Ampt Method

CEREUS WASH WATERSHED WITH LAKES
* Note - DTHETA and IA are Land Use weighted values

Sub-Area	Area (acres)	Area (sq. mi.)	Soil Type Number	Soil Type Percent	XKSAT (in/hr)	PSIF (in)	DTHETA (in)	RTIMP (%)	IA (in)
120A	10.17	0.016	40	10.72%	0.17			0.00%	
			41	89.28%	0.17			0.00%	
			TOTAL	100.00%	0.17	5.70	0.25	0.00%	0.100
160A	3.71	0.006	41	100.00%	0.17	5.70	0.25	0.00%	0.100
120B	33.86	0.053	40	15.77%	0.17			0.00%	
			41	84.23%	0.17			0.00%	
			TOTAL	100.00%	0.17	5.70	0.25	0.00%	0.150
120C	3.43	0.005	40	100.00%	0.17	5.70	0.25	0.00%	0.100
120D	44.03	0.069	40	74.99%	0.17			0.00%	
			61	25.01%	0.15			0.00%	
			TOTAL	100.00%	0.16	5.80	0.25	0.00%	0.132
120E	11.61	0.018	40	42.81%	0.17			0.00%	
			61	57.19%	0.15			0.00%	
			TOTAL	100.00%	0.16	5.80	0.25	0.00%	0.050
120F	13.76	0.022	40	46.88%	0.17			0.00%	
			63	53.13%	0.14			25.00%	
			TOTAL	100.00%	0.15	6.00	0.25	13.28%	0.050
120G	23.45	0.037	63	68.91%	0.14			25.00%	
			96	31.09%	0.07			0.00%	
			TOTAL	100.00%	0.11	6.80	0.17	17.23%	0.150
120H	3.47	0.005	40	49.57%	0.17			0.00%	
			61	50.43%	0.15			0.00%	
			TOTAL	100.00%	0.16	5.80	0.25	0.00%	0.085
120I	4.61	0.007	40	77.22%	0.17			0.00%	
			61	22.78%	0.15			0.00%	
			TOTAL	100.00%	0.17	5.70	0.25	0.00%	0.150
120J	3.60	0.006	40	100.00%	0.17	5.70	0.25	0.00%	0.100
120K	21.51	0.034	40	100.00%	0.17	5.70	0.25	0.00%	0.150
120L	20.48	0.032	63	56.63%	0.14			25.00%	
			96	43.37%	0.07			0.00%	
			TOTAL	100.00%	0.10	7.00	0.15	14.16%	0.150
120M	18.56	0.029	40	69.53%	0.17			0.00%	
			63	30.47%	0.14			25.00%	
			TOTAL	100.00%	0.16	5.80	0.25	76.20%	0.100

Sub-Area	Area (acres)	Area (sq. mi.)	Soil Type Number	Soil Type Percent	XKSAT (in/hr)	PSIF (in)	DTHETA (in)	RTIMP (%) Current	IA (in)
120N	27.52	0.043	40	23.50%	0.17			0.00%	
			63	24.20%	0.14			25.00%	
			96	52.30%	0.07			0.00%	
			TOTAL	100.00%	0.10	7.00	0.15	6.05%	0.136
120O	5.06	0.008	40	100.00%	0.17	5.70	0.25	0.00%	0.100
120P	18.04	0.028	40	100.00%	0.17	5.70	0.25	0.00%	0.150
120Q	22.46	0.035	40	8.86%	0.17			0.00%	
			61	38.74%	0.15			0.00%	
			96	52.40%	0.07			0.00%	
			TOTAL	100.00%	0.10	7.00	0.15	0.00%	0.138
120R	7.69	0.012	61	100.00%	0.15	6.00	0.25	0.00%	0.140
120S	4.23	0.007	40	5.20%	0.17			0.00%	
			96	94.80%	0.07			0.00%	
			TOTAL	100.00%	0.07	8.00	0.15	0.00%	0.054
120T	1.27	0.002	61	7.87%	0.15			0.00%	
			96	92.13%	0.07			0.00%	
			TOTAL	100.00%	0.07	8.00	0.15	0.00%	0.150
120U	12.06	0.019	61	56.97%	0.15			0.00%	
			96	43.03%	0.07			0.00%	
			TOTAL	100.00%	0.11	6.80	0.17	0.00%	0.011
120V	6.43	0.010	61	75.27%	0.15			0.00%	
			96	24.73%	0.07			0.00%	
			TOTAL	100.00%	0.12	6.60	0.19	0.00%	0.150
120W	3.51	0.005	61	100.00%	0.15	6.00	0.25	0.00%	0.147
120X	10.49	0.016	61	24.88%	0.15			0.00%	
			96	75.12%	0.07			0.00%	
			TOTAL	100.00%	0.08	7.60	0.15	0.00%	0.117
121A	31.85	0.050	61	100.00%	0.15	6.00	0.25	0.00%	0.150
121B	12.67	0.020	61	100.00%	0.15	6.00	0.25	0.00%	0.150
122A	13.00	0.020	61	100.00%	0.15	6.00	0.25	0.00%	0.115
122B	21.68	0.034	61	100.00%	0.15	6.00	0.25	0.00%	0.110
122C	9.22	0.014	61	56.18%	0.15			0.00%	
			63	43.82%	0.14			25.00%	
			TOTAL	100.00%	0.15	6.00	0.25	10.95%	0.150
122D	20.47	0.032	61	100.00%	0.15	6.00	0.25	0.00%	0.150
122E	20.48	0.032	61	57.67%	0.15			0.00%	
			63	42.33%	0.14			25.00%	
			TOTAL	100.00%	0.15	6.00	0.25	10.58%	0.144

Sub-Area	Area (acres)	Area (sq. mi.)	Soil Type Number	Soil Type Percent	XKSAT (in/hr)	PSIF (in)	DTHETA (in)	RTIMP (%) Current	IA (in)
122F	6.56	0.010	61	18.29%	0.15			0.00%	
			63	81.71%	0.14			25.00%	
			TOTAL	100.00%	0.15	6.20	0.23	20.43%	0.150
122G	14.09	0.022	61	100.00%	0.15	6.00	0.25	0.00%	0.100
122H	3.94	0.006	61	100.00%	0.15	6.00	0.25	0.00%	0.150
122I	4.79	0.007	61	100.00%	0.15	6.00	0.25	0.00%	0.150
122J	15.83	0.025	61	100.00%	0.15	6.00	0.25	0.00%	0.150
122K	2.16	0.003	61	86.11%	0.15			0.00%	
			96	13.89%	0.07			0.00%	
			TOTAL	100.00%	0.13	6.40	0.21	0.00%	0.134
123A	47.98	0.075	40	100.00%	0.17	5.70	0.25	0.00%	0.150
123B	11.89	0.019	40	100.00%	0.17	5.70	0.25	0.00%	0.150
123C	2.19	0.003	40	100.00%	0.17	5.70	0.25	0.00%	0.150
123D	6.49	0.010	40	100.00%	0.17	5.70	0.25	0.00%	0.100
124A	45.33	0.071	61	16.68%	0.15			0.00%	
			63	11.27%	0.14			25.00%	
			72	72.05%	0.09			30.00%	
			TOTAL	100.00%	0.10	7.00	0.15	24.43%	0.150
124B	27.36	0.043	61	16.26%	0.15			0.00%	
			63	31.98%	0.14			25.00%	
			72	51.75%	0.09			30.00%	
			TOTAL	100.00%	0.11	6.80	0.17	23.52%	0.150
124C	12.92	0.020	61	28.79%	0.15			0.00%	
			63	71.21%	0.14			25.00%	
			TOTAL	100.00%	0.14	6.20	0.23	17.80%	0.150
124D	5.77	0.009	61	36.05%	0.15			0.00%	
			63	63.95%	0.14			25.00%	
			TOTAL	100.00%	0.14	6.20	0.23	15.99%	0.150
124E	32.74	0.051	61	10.17%	0.15			0.00%	
			63	83.57%	0.14			25.00%	
			96	6.26%	0.07			0.00%	
			TOTAL	100.00%	0.13	6.40	0.21	20.89%	0.150
125A	49.55	0.077	72	100.00%	0.09	7.30	0.15	30.00%	0.150
125B	72.25	0.113	63	5.90%	0.14			25.00%	
			72	94.10%	0.09			30.00%	
			TOTAL	100.00%	0.09	7.30	0.15	29.71%	0.150

Sub-Area	Area (acres)	Area (sq. mi.)	Soil Type Number	Soil Type Percent	XKSAT (in/hr)	PSIF (in)	DTHETA (in)	RTIMP (%) Current	IA (in)
125C	19.24	0.030	63	10.24%	0.14			25.00%	
			72	89.76%	0.09			30.00%	
			TOTAL	100.00%	0.09	7.30	0.15	29.49%	0.150
125D	11.33	0.018	63	81.73%	0.14			25.00%	
			72	18.27%	0.09			30.00%	
			TOTAL	100.00%	0.13	6.40	0.21	25.91%	0.100
125E	29.86	0.047	63	100.00%	0.14	6.20	0.23	25.00%	0.150
126A	4.19	0.007	41	100.00%	0.17	5.70	0.25	0.00%	0.100
126B	13.34	0.021	41	100.00%	0.17	5.70	0.25	0.00%	0.100
126C	90.75	0.142	41	100.00%	0.17	5.70	0.32	0.00%	0.140
126D	18.16	0.028	41	100.00%	0.17	5.70	0.25	0.00%	0.146
126E	57.87	0.090	41	27.06%	0.17			0.00%	
			72	72.94%	0.09			30.00%	
			TOTAL	100.00%	0.11	6.80	0.36	21.88%	0.150
126F	35.21	0.055	72	100.00%	0.09	7.30	0.33	30.00%	0.150
126G	86.87	0.136	41	38.67%	0.17			0.00%	
			72	61.33%	0.09			30.00%	
			TOTAL	100.00%	0.12	6.60	0.24	18.40%	0.150
126H	12.74	0.020	41	100.00%	0.17	5.70	0.25	0.00%	0.127
126I	52.28	0.082	41	47.97%	0.17			0.00%	
			72	52.03%	0.09			30.00%	
			TOTAL	100.00%	0.12	6.60	0.19	15.61%	0.133
126J	1.59	0.002	41	100.00%	0.17	5.70	0.25	0.00%	0.100
126K	7.60	0.012	40	9.47%	0.17			0.00%	
			41	90.53%	0.17			0.00%	
			TOTAL	100.00%	0.17	5.70	0.25	0.00%	0.100
126L	15.01	0.023	40	3.13%	0.17			0.00%	
			61	75.08%	0.15			0.00%	
			72	21.79%	0.09			30.00%	
			TOTAL	100.00%	0.13	6.40	0.21	6.54%	0.150
126M	16.25	0.025	40	35.57%	0.17			0.00%	
			41	13.29%	0.17			0.00%	
			61	30.28%	0.15			0.00%	
			72	20.86%	0.09			30.00%	
			TOTAL	100.00%	0.14	6.20	0.23	6.26%	0.144

Sub-Area	Area (acres)	Area (sq. mi.)	Soil Type Number	Soil Type Percent	XKSAT (in/hr)	PSIF (in)	DTHETA (in)	RTIMP (%) Current	IA (in)
126N	49.06	0.077	40	28.80%	0.17			0.00%	
			61	19.12%	0.15			0.00%	
			63	35.08%	0.14			25.00%	
			72	17.00%	0.09			30.00%	
			TOTAL	100.00%	0.14	6.20	0.23	13.87%	0.150
127A	18.22	0.028	41	100.00%	0.17	5.70	0.25	0.00%	0.150
127B	24.85	0.039	41	85.59%	0.17			0.00%	
			61	14.41%	0.15			0.00%	
			TOTAL	100.00%	0.17	5.70	0.25	0.00%	0.100
127C1	18.04	0.028	41	26.64%	0.17			0.00%	
			72	73.36%	0.09			30.00%	
			TOTAL	100.00%	0.11	6.80	0.17	22.01%	0.150
127C2	9.02	0.014	41	26.64%	0.17			0.00%	
			72	73.36%	0.09			30.00%	
			TOTAL	100.00%	0.11	6.80	0.17	22.01%	0.150
127D	15.51	0.024	40	0.90%	0.17			0.00%	
			41	56.03%	0.17			0.00%	
			61	43.07%	0.15			0.00%	
			TOTAL	100.00%	0.16	5.80	0.25	0.00%	0.150
127E	66.11	0.103	40	34.53%	0.17			0.00%	
			61	4.22%	0.15			0.00%	
			72	61.25%	0.09			30.00%	
			TOTAL	100.00%	0.11	6.80	0.20	18.37%	0.150
127F	93.91	0.147	72	100.00%	0.09	7.30	0.23	30.00%	0.150
127G	36.34	0.057	61	30.02%	0.15			0.00%	
			72	69.98%	0.09			30.00%	
			TOTAL	100.00%	0.10	7.00	0.15	20.99%	0.150
127H	11.26	0.018	40	14.74%	0.17			0.00%	
			72	85.26%	0.09			30.00%	
			TOTAL	100.00%	0.10	7.00	0.15	25.58%	0.150
127I	6.59	0.010	40	20.49%	0.17			0.00%	
			61	79.51%	0.15			0.00%	
			TOTAL	100.00%	0.15	6.00	0.25	0.00%	0.100
127J	20.56	0.032	40	37.01%	0.17			0.00%	
			72	62.99%	0.09			30.00%	
			TOTAL	100.00%	0.11	6.80	0.17	18.90%	0.100

APPENDIX B.3

MCUHP1 PROGRAM INPUT/OUTPUT VALUES

MCUHP1 Program
Input Values

CEREUS WASH WATERSHED

Sub-Area	AREA (sq. mi.)	LENGTH (miles)	Kb	SLOPE (ft/mile)	IA (in)	DTHETA	PSIF	XKSAT	RTIMP (%) Current	W LAKES RTIMP (%) Future
120A	0.016	0.490	0.066	245.00	0.100	0.250	5.70	0.170	31.50	45.00
160A	0.006	0.130	0.072	256.00	0.100	0.250	5.70	0.170	40.50	45.00
120B	0.053	0.470	0.112	255.00	0.150	0.250	5.70	0.207	9.00	45.00
120C	0.005	0.170	0.086	266.00	0.100	0.250	5.70	0.170	34.30	41.33
120D	0.069	0.560	0.057	154.90	0.132	0.250	5.80	0.187	5.81	24.21
120E	0.018	0.470	0.065	157.90	0.050	0.250	5.80	0.160	13.96	20.53
120F	0.022	0.320	0.064	176.50	0.150	0.250	6.00	0.183	12.46	34.96
120G	0.037	0.380	0.116	290.00	0.150	0.170	6.80	0.134	12.92	37.92
120H	0.005	0.310	0.073	235.00	0.085	0.250	5.80	0.160	30.91	39.12
120I	0.007	0.180	0.133	283.00	0.150	0.250	5.70	0.207	10.00	25.00
120J	0.006	0.320	0.072	75.70	0.100	0.250	5.70	0.170	15.00	25.00
120K	0.034	0.430	0.117	232.00	0.150	0.250	5.70	0.207	11.25	25.00
120L	0.032	0.390	0.117	297.00	0.150	0.150	7.00	0.122	5.55	66.32
120M	0.029	0.455	0.063	176.00	0.100	0.250	5.80	0.186	19.93	43.85
120N	0.043	0.470	0.060	183.70	0.136	0.150	7.00	0.117	11.44	69.71
120O	0.008	0.130	0.070	135.80	0.100	0.250	5.70	0.189	10.00	25.00
120P	0.028	0.130	0.119	326.00	0.150	0.250	5.70	0.198	7.50	25.00
120Q	0.035	0.410	0.061	100.70	0.138	0.150	7.00	0.118	11.72	68.92
120R	0.012	0.320	0.068	92.50	0.140	0.250	6.00	0.178	4.61	76.82
120S	0.007	0.210	0.071	103.30	0.054	0.150	8.00	0.070	33.28	49.67
120T	0.002	0.100	0.147	226.00	0.150	0.150	8.00	0.085	0.00	80.75
120U	0.019	0.260	0.065	148.60	0.011	0.170	6.80	0.128	13.23	63.01
120V	0.010	0.200	0.130	286.00	0.150	0.190	6.60	0.146	0.99	19.82
120W	0.005	0.080	0.073	168.00	0.147	0.250	6.00	0.181	3.01	16.71
120X	0.016	0.200	0.066	157.90	0.117	0.150	7.60	0.092	24.24	73.46
121A	0.050	0.530	0.059	81.80	0.150	0.250	6.00	0.175	6.00	15.00
121B	0.020	0.440	0.065	110.20	0.150	0.250	6.00	0.175	10.98	15.91
122A	0.020	0.480	0.065	156.80	0.115	0.250	6.00	0.162	8.20	43.16
122B	0.034	0.320	0.062	128.20	0.110	0.250	6.00	0.162	31.04	77.60
122C	0.014	0.220	0.126	329.00	0.150	0.250	6.00	0.163	11.32	42.10
122D	0.032	0.370	0.062	121.00	0.150	0.250	6.00	0.183	1.48	37.09
122E	0.032	0.330	0.117	305.00	0.144	0.250	6.00	0.168	12.39	57.93
122F	0.010	0.300	0.130	275.00	0.150	0.230	6.20	0.171	20.11	80.11

Sub-Area	AREA (sq. mi.)	LENGTH (miles)	Kb	SLOPE (ft/mile)	IA (in)	DTHETA	PSIF	XKSAT	RTIMP (%) Current	RTIMP (%) Future
122G	0.022	0.300	0.033	114.90	0.100	0.250	6.00	0.158	64.50	75.00
122H	0.006	0.160	0.072	146.80	0.150	0.250	6.00	0.181	16.13	73.32
122I	0.007	0.190	0.071	73.00	0.150	0.250	6.00	0.175	14.25	75.00
122J	0.025	0.370	0.064	96.80	0.150	0.250	6.00	0.183	19.78	38.78
122K	0.003	0.180	0.075	66.70	0.134	0.210	6.40	0.152	9.67	56.90
123A	0.075	0.530	0.108	256.00	0.150	0.250	5.70	0.207	5.00	25.00
123B	0.019	0.260	0.123	296.00	0.150	0.250	5.70	0.207	6.25	25.00
123C	0.003	0.070	0.141	367.00	0.150	0.250	5.70	0.207	3.75	25.00
123D	0.010	0.400	0.130	286.00	0.100	0.250	5.70	0.189	11.25	25.00
124A	0.071	0.630	0.109	301.00	0.150	0.150	7.00	0.122	20.64	46.17
124B	0.043	0.300	0.114	301.00	0.150	0.170	6.80	0.134	19.01	38.18
124C	0.020	0.370	0.122	277.00	0.150	0.230	6.20	0.171	17.24	43.54
124D	0.009	0.370	0.122	277.00	0.150	0.230	6.20	0.171	9.35	50.84
124E	0.051	0.440	0.112	295.00	0.150	0.210	6.40	0.159	13.43	49.15
125A	0.077	0.720	0.108	287.00	0.150	0.150	7.30	0.110	25.50	40.50
125B	0.113	0.730	0.104	243.00	0.150	0.150	7.30	0.110	25.25	40.25
125C	0.030	0.350	0.118	285.00	0.150	0.150	7.30	0.110	25.06	40.06
125D	0.018	0.210	0.066	4.80	0.100	0.210	6.40	0.159	22.03	100.00
125E	0.047	0.410	0.060	123.80	0.150	0.230	6.20	0.171	19.18	42.46
126A	0.007	0.200	0.071	147.30	0.100	0.250	5.70	0.170	27.00	45.00
126B	0.021	0.470	0.065	192.80	0.100	0.250	5.70	0.179	22.50	45.00
126C	0.142	0.980	0.101	257.00	0.140	0.320	5.70	0.204	1.24	13.77
126D	0.028	0.320	0.119	289.00	0.146	0.250	5.70	0.204	3.24	23.16
126E	0.090	0.550	0.106	273.00	0.150	0.360	6.80	0.134	21.88	21.88
126F	0.055	0.420	0.111	311.00	0.150	0.330	7.30	0.110	30.00	30.00
126G	0.136	0.860	0.102	293.00	0.500	0.240	6.60	0.146	16.34	27.55
126H	0.020	0.290	0.122	300.00	0.127	0.250	5.70	0.199	9.76	28.71
126I	0.082	0.480	0.107	271.00	0.133	0.190	6.60	0.144	14.10	38.28
126J	0.002	0.150	0.077	138.60	0.100	0.250	5.70	0.179	22.50	45.00
126K	0.012	0.360	0.068	259.00	0.100	0.250	5.70	0.179	27.00	45.00
126L	0.023	0.390	0.121	269.00	0.150	0.210	6.40	0.159	9.42	38.36
126M	0.025	0.360	0.120	278.00	0.144	0.230	6.20	0.169	7.63	25.37
126N	0.077	0.670	0.108	290.00	0.150	0.230	6.20	0.171	12.26	27.92

Sub-Area	AREA (sq. mi.)	LENGTH (miles)	Kb	SLOPE (ft/mile)	IA (in)	DTHETA	PSIF	XKSAT	RTIMP (%) Current	RTIMP (%) Future
127A	0.028	0.360	0.118	293.00	0.150	0.250	5.70	0.207	0.00	18.00
127B	0.039	0.340	0.115	305.00	0.100	0.250	5.70	0.189	4.50	18.00
127C1	0.028	0.292	0.119	283.00	0.150	0.170	6.80	0.134	18.71	43.71
127C2	0.014	0.220	0.126	283.00	0.150	0.170	6.80	0.134	18.71	33.71
127D	0.024	0.300	0.120	288.00	0.150	0.250	5.80	0.195	1.50	15.00
127E	0.103	0.660	0.104	296.00	0.150	0.204	6.80	0.134	16.73	28.41
127F	0.147	0.810	0.101	297.00	0.150	0.229	7.30	0.110	25.52	40.45
127G	0.057	0.400	0.111	288.00	0.150	0.150	7.00	0.122	19.75	45.57
127H	0.018	0.270	0.124	329.00	0.150	0.150	7.00	0.122	21.74	36.74
127I	0.010	0.360	0.069	269.00	0.100	0.250	6.00	0.158	9.00	90.00
127J	0.032	0.390	0.117	313.00	0.100	0.170	6.80	0.122	16.06	31.06

APPENDIX C

RAINFALL CHARTS AND PROBABLE MAXIMUM PRECIPITATION

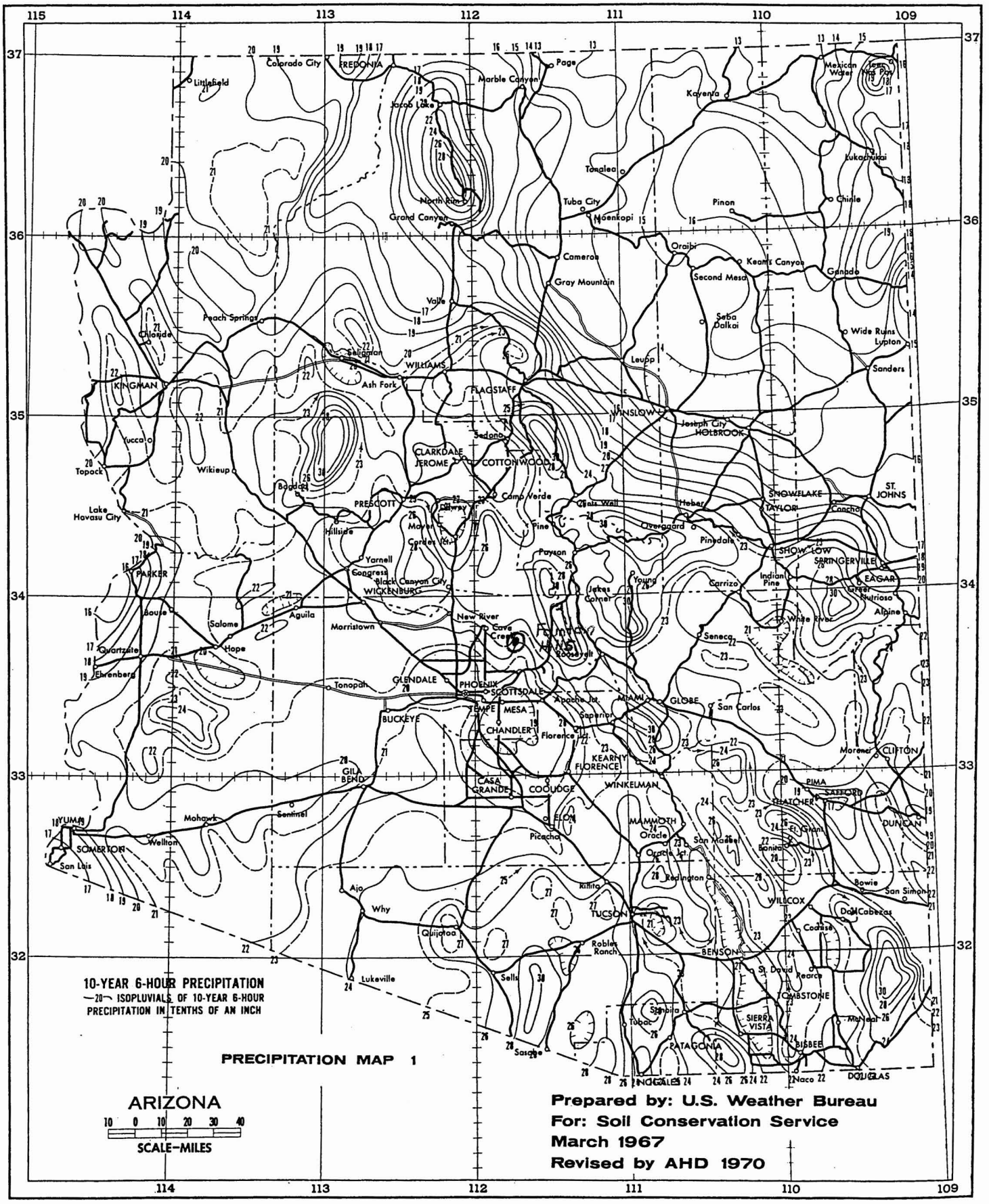
10-YEAR 6-HOUR PRECIPITATION
—20— ISOPLUVIALS OF 10-YEAR 6-HOUR PRECIPITATION IN TENTHS OF AN INCH
PRECIPITATION MAP 1
ARIZONA
SCALE-MILES
Prepared by: U.S. Weather Bureau
For: Soil Conservation Service
March 1967
Revised by AHD 1970
Colorado City
FREDONIA
Page
Marble Canyon
Jacob Lake
Kayenta
Mexican Water
Lukachukai
Tonalea
Tuba City
Moenkopi
Pinon
Chinle
North Rim
Grand Canyon
Cameron
Oraibi
Keams Canyon
Second Mesa
Ganado
Gray Mountain
Valle
Peach Springs
Seligman
Chloride
Seba Dalkai
Wide Ruins
Lupton
Leupp
Sanders
WILLIAMS
Ash Fork
KINGMAN
FLAGSTAFF
WINSLOW
Joseph City
HOLBROOK
Sedona
Yucca
Topock
CLARKDALE
JEROME
COTTONWOOD
Wikieup
Bagdad
PRESCOTT
Chino Valley
Camp Verde
Cedar Wall
Heber
SNOWFLAKE
TAYLOR
ST. JOHNS
Concho
Lake Havasu City
Hillside
Mayer
Cordes Jct.
Pine
Overgaard
Pinedale
SHOW LOW
SPRINGERVILLE
EAGAR
Payson
Yarnell
Congress
Black Canyon City
WICKENBURG
PARKER
Jakes Corner
Young
Carrizo
Indian Pine
Greer
Nutrioso
Alpine
Aguila
Morristown
New River
Cave Creek
Roosevelt
White River
Seneca
Boule
Salome
Hope
Quartzsite
Ehrenberg
Tonopah
GLENDALE
PHOENIX
SCOTTSDALE
TEMPE
MESA
Apache Jct.
MIAMI
GLOBE
San Carlos
Superior
BUCKEYE
CHANDLER
Florence Jct.
KEARNY
FLORENCE
Morenci
CLIFTON
GILA BEND
CASA GRANDE
COOLIDGE
WINKELMAN
PIMA
SAFFORD
THATCHER
YUMA
Mohawk
Sentinel
ELOY
Picacho
MAMMOTH
Oracle
San Manuel
Oracle Jct.
Bonita
DUNCAN
SOMERTON
Wellton
San Luis
Redington
Kitt Peak
Bowie
San Simon
Aja
Why
TUCSON
WILCOX
Dos Cabezas
Cochise
Quijotoa
Robles Ranch
BENSON
St. David
Rearce
Lukeville
Sells
TOMBSTONE
Sonoita
Tubac
SIERRA VISTA
Mescal
PATAGONIA
BISBEE
Sasabe
NOGALES
Naco
DOUGLAS

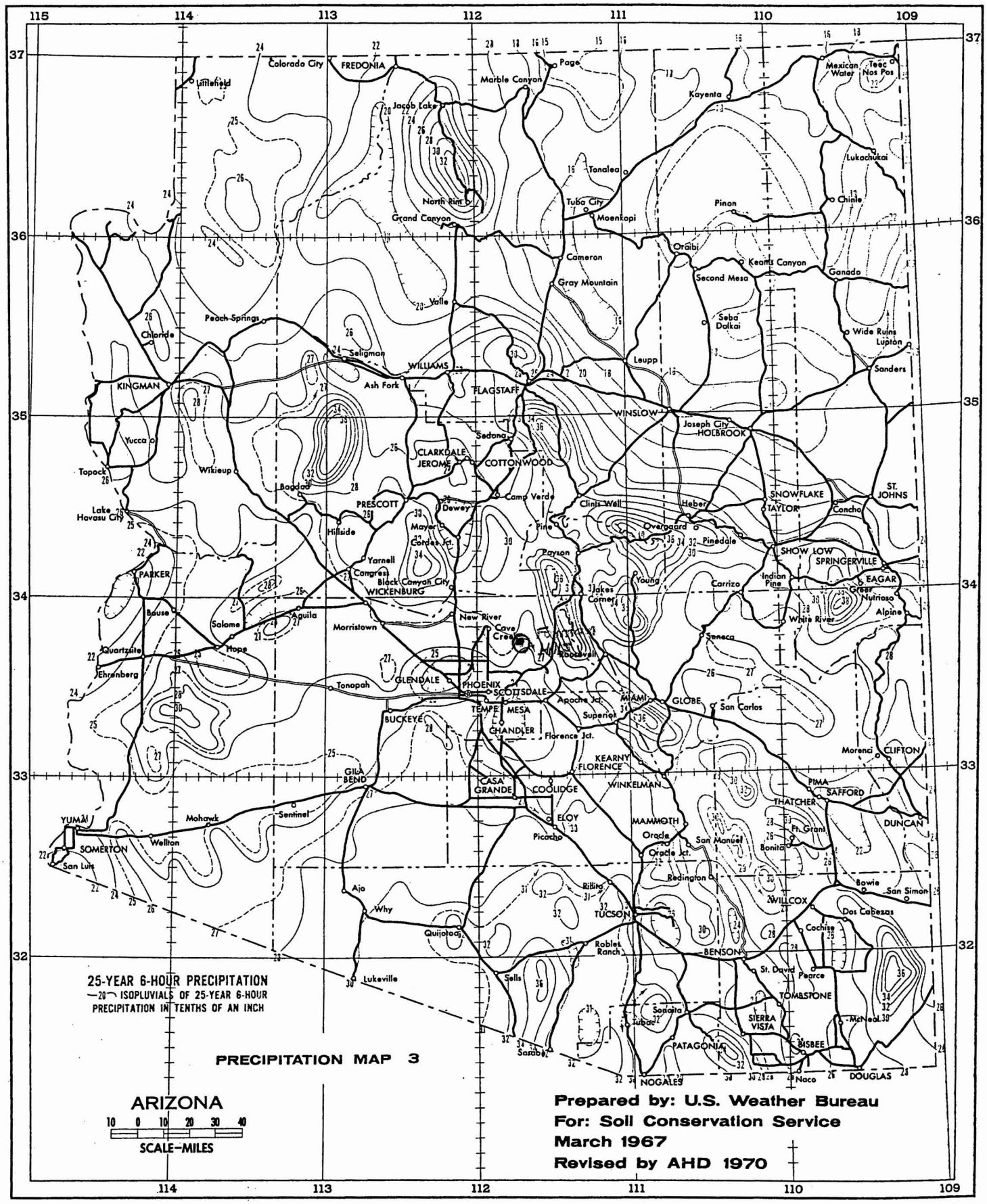
25-YEAR 6-HOUR PRECIPITATION
20 ISOPLUVIALS OF 25-YEAR 6-HOUR PRECIPITATION IN TENTHS OF AN INCH
PRECIPITATION MAP 3
ARIZONA
SCALE-MILES
Prepared by: U.S. Weather Bureau
For: Soil Conservation Service
March 1967
Revised by AHD 1970
Colorado City
FREDONIA
Page
Marble Canyon
Jacob Lake
Kayenta
Mexican Water
Teec Nos Pos
Lukachukai
Tonalea
Tuba City
Moenkopi
Pinon
Chinle
North Rim
Grand Canyon
Oraibi
Cameron
Keams Canyon
Second Mesa
Ganado
Gray Mountain
Valle
Peach Springs
Seba Dalkai
Wide Ruins
Lupton
Chloride
Seligman
WILLIAMS
Leupp
Sanders
KINGMAN
Ash Fork
FLAGSTAFF
WINSLOW
Joseph City
HOLBROOK
Yucca
Sedona
CLARKDALE
JEROME
COTTONWOOD
Topock
Wikieup
Bagdad
PRESCOTT
Camp Verde
Clints Well
Heber
SNOWFLAKE
TAYLOR
ST. JOHNS
Concho
Lake Havasu City
Dewey
Mayer
Hillside
Pine
Overgaard
Pinedale
Cordes Jct.
Payson
SHOW LOW
SPRINGERVILLE
Yarnell
Congress
Black Canyon City
WICKENBURG
PARKER
Young
Carrizo
Indian Pine
EAGAR
Greer
Nutrioso
Jakes Corner
Bouse
Salome
Aguila
Morristown
New River
Cave Creek
White River
Alpine
Quartzsite
Hope
Seneca
Ehrenberg
Roosevelt
Tonopah
GLENDALE
PHOENIX
SCOTTSDALE
Apache Jct.
MIAMI
GLOBE
San Carlos
TEMPE
MESA
Superior
BUCKEYE
CHANDLER
Florence Jct.
Morenci
CLIFTON
KEARNY
FLORENCE
GILA BEND
CASA GRANDE
COOLIDGE
WINKELMAN
PIMA
SAFFORD
THATCHER
YUMA
Mohawk
Sentinel
ELOY
MAMMOTH
DUNCAN
SOMERTON
Wellton
Picacho
Oracle
San Manuel
Ft. Grant
Bonita
San Luis
Oracle Jct.
Redington
Bowie
San Simon
Ajo
Why
Rillito
WILLCOX
TUCSON
Dos Cabezas
Cochise
Quijotoa
Robles Ranch
BENSON
St. David
Pearce
Lukeville
Sells
TOMBSTONE
Sonoita
Tubac
SIERRA VISTA
McNeal
BISBEE
PATAGONIA
Sasabe
NOGALES
Naco
DOUGLAS

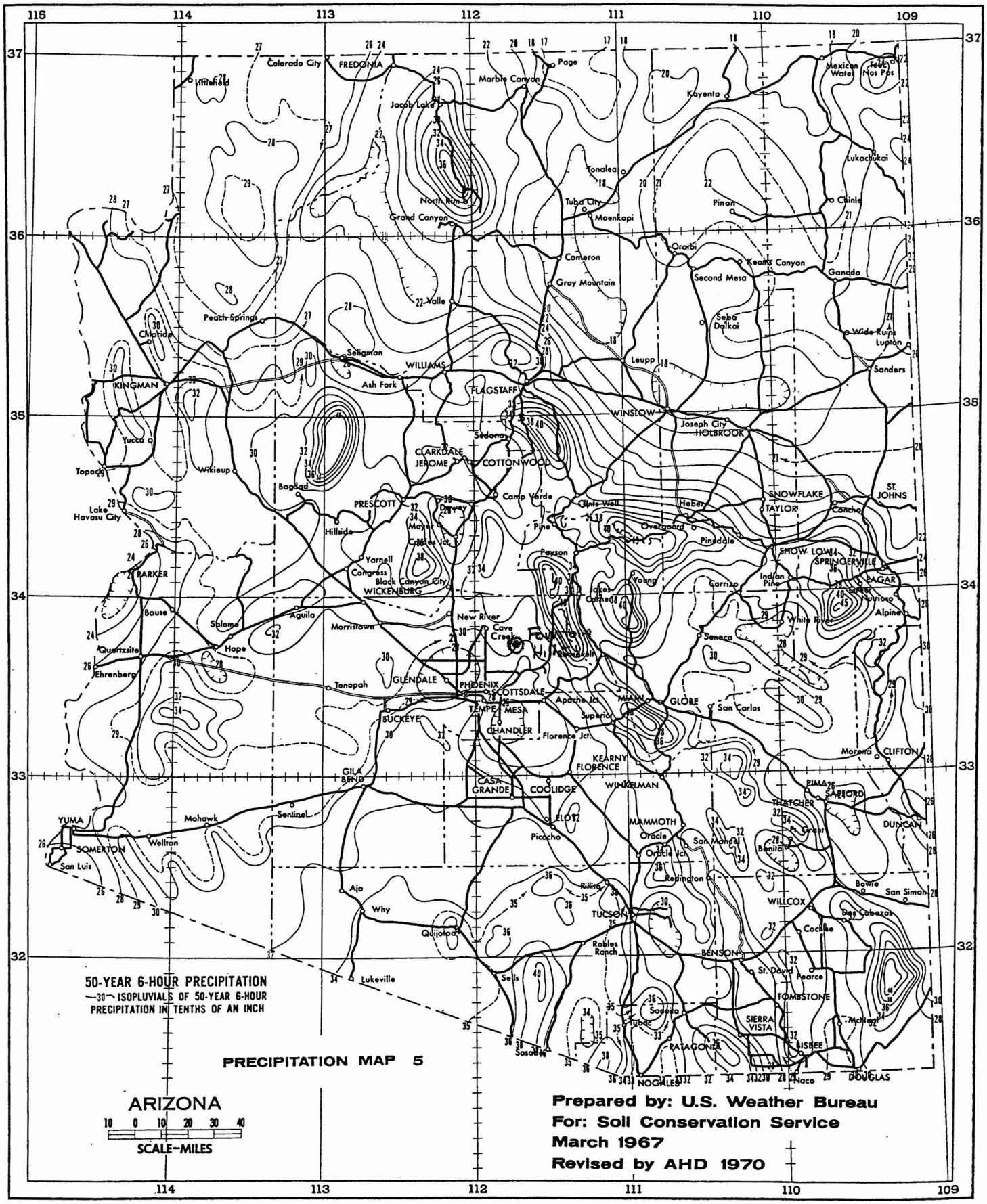
50-YEAR 6-HOUR PRECIPITATION
—30— ISOPLUVIALS OF 50-YEAR 6-HOUR PRECIPITATION IN TENTHS OF AN INCH
PRECIPITATION MAP 5
ARIZONA
SCALE-MILES
Prepared by: U.S. Weather Bureau
For: Soil Conservation Service
March 1967
Revised by AHD 1970
Colorado City
FREDONIA
Page
Marble Canyon
Jacob Lake
North Rim
Grand Canyon
Tonalea
Tuba City
Moenkopi
Kayenta
Pinon
Chinle
Lukachukai
Mexican Water
Teec Nos Pos
Cameron
Gray Mountain
Oraibi
Keams Canyon
Second Mesa
Ganado
Sedona
Peach Springs
Chloride
Seligman
WILLIAMS
Ash Fork
KINGMAN
FLAGSTAFF
WINSLOW
Joseph City
HOLBROOK
Leupp
Sanders
Wide Ruins
Lupton
Yucca
Topock
Wikieup
Bagdad
CLARKDALE
JEROME
COTTONWOOD
Camp Verde
PRESCOTT
Dewey
Mayer
Cordes Jct.
Hillside
Lake Havasu City
Pine
Payson
Overgaard
Pinedale
Heber
SNOWFLAKE
TAYLOR
Concho
ST. JOHNS
SHOW LOW
SPRINGERVILLE
EAGAR
Indian Pine
Carrizo
Young
Alpine
White River
Yarnell
Congress
Black Canyon City
WICKENBURG
PARKER
Bouse
Salome
Aguila
Morristown
New River
Cave Creek
Fountain Hills
Seneca
Quartzsite
Hope
Ehrenberg
Tonopah
GLENDALE
PHOENIX
SCOTTSDALE
Apache Jct.
MIAMI
GLOBE
San Carlos
BUCKEYE
TEMPE
MESA
CHANDLER
Superior
Florence Jct.
Morenci
CLIFTON
KEARNY
FLORENCE
GILA BEND
CASA GRANDE
COOLIDGE
WINKELMAN
PIMA
SAFFORD
THATCHER
YUMA
Mohawk
Sentinel
ELOY
Picacho
MAMMOTH
Oracle
San Manuel
Benita
DUNCAN
SOMERTON
Wellton
San Luis
Oracle Jct.
Redington
Ajo
Why
Quijotoa
Rillito
TUCSON
Bowie
San Simon
WILLCOX
Bay Cabezas
Cochise
Robles Ranch
BENSON
St. David
Pearce
Lukeville
Sells
Sasabe
Sonoita
Tubac
TOMBSTONE
SIERRA VISTA
McNeal
PATAGONIA
BISBEE
NOGALES
Naco
DOUGLAS

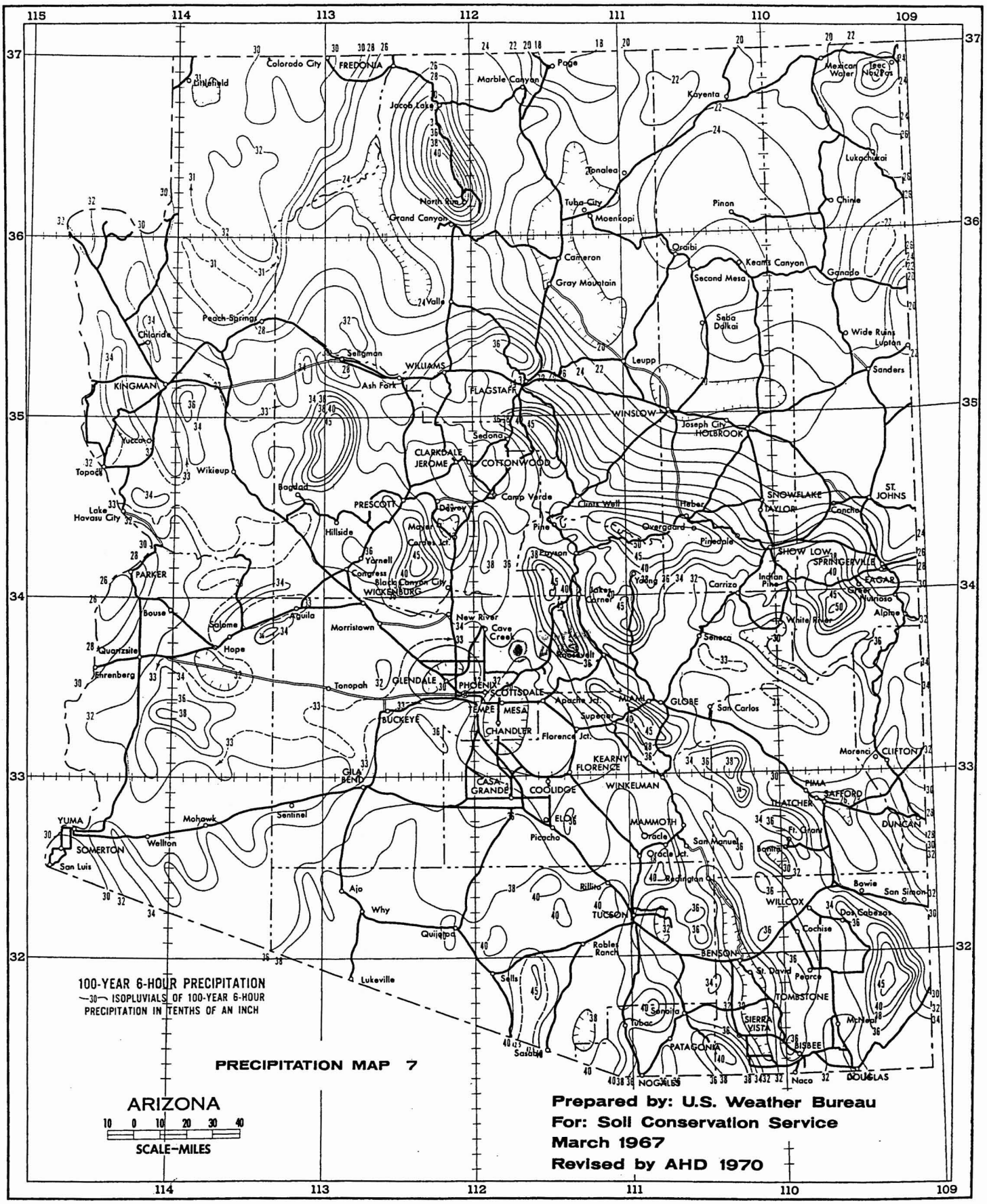
100-YEAR 6-HOUR PRECIPITATION
—30— ISOPLUVIALS OF 100-YEAR 6-HOUR PRECIPITATION IN TENTHS OF AN INCH
PRECIPITATION MAP 7
ARIZONA
SCALE-MILES
Prepared by: U.S. Weather Bureau
For: Soil Conservation Service
March 1967
Revised by AHD 1970
FREDONIA
Colorado City
Page
Marble Canyon
Jacob Lake
Kayenta
Mexican Water
Lukachukai
Tonalea
Tuba City
Moenkopi
Pinon
Chinle
North Rim
Grand Canyon
Cameron
Oraibi
Keams Canyon
Second Mesa
Ganado
Gray Mountain
Valle
Peach Springs
Chloride
Seligman
Ash Fork
WILLIAMS
FLAGSTAFF
Leupp
Wide Ruins
Lupton
Sanders
KINGMAN
WINSLOW
Joseph City
HOLBROOK
Yucca
Topock
Sedona
CLARKDALE
JEROME
COTTONWOOD
Wikieup
Bagdad
Camp Verde
Clints Well
Heber
SNOWFLAKE
TAYLOR
Concho
ST. JOHNS
Lake Havasu City
PRESCOTT
Dewey
Mayer
Cordes Jct.
Hillside
Pine
Overgaard
Pinedale
Payson
SHOW LOW
SPRINGERVILLE
EAGAR
Yarnell
Congress
Black Canyon City
WICKENBURG
Jakes Corner
Carriza
Indian Pine
Greer
Nutrioso
PARKER
Bouse
Aguila
Morristown
New River
Cave Creek
White River
Alpine
Salome
Hope
Quartzsite
Ehrenberg
Tonopah
GLENDALE
PHOENIX
SCOTTSDALE
Roosevelt
Seneca
Apache Jct.
MIAMI
GLOBE
San Carlos
BUCKEYE
TEMPE
MESA
Superior
CHANDLER
Florence Jct.
Morenci
CLIFTON
KEARNY
FLORENCE
GILA BEND
CASA GRANDE
COOLIDGE
WINKELMAN
PIMA
SAFFORD
THATCHER
YUMA
Mohawk
Sentinel
ELOY
Picacho
MAMMOTH
Oracle
San Manuel
Ft. Grant
DUNCAN
SOMERTON
Wellton
San Luis
Oracle Jct.
Bonita
Rillito
Redington
Bowie
San Simon
Ajo
Why
TUCSON
WILLCOX
Dos Cabezas
Cochise
Quijotoa
Robles Ranch
BENSON
St. David
Pearce
Lukeville
Sells
TOMBSTONE
Sonoita
Tubac
SIERRA VISTA
McNeal
PATAGONIA
BISBEE
Sasabe
NOGALES
Naco
DOUGLAS

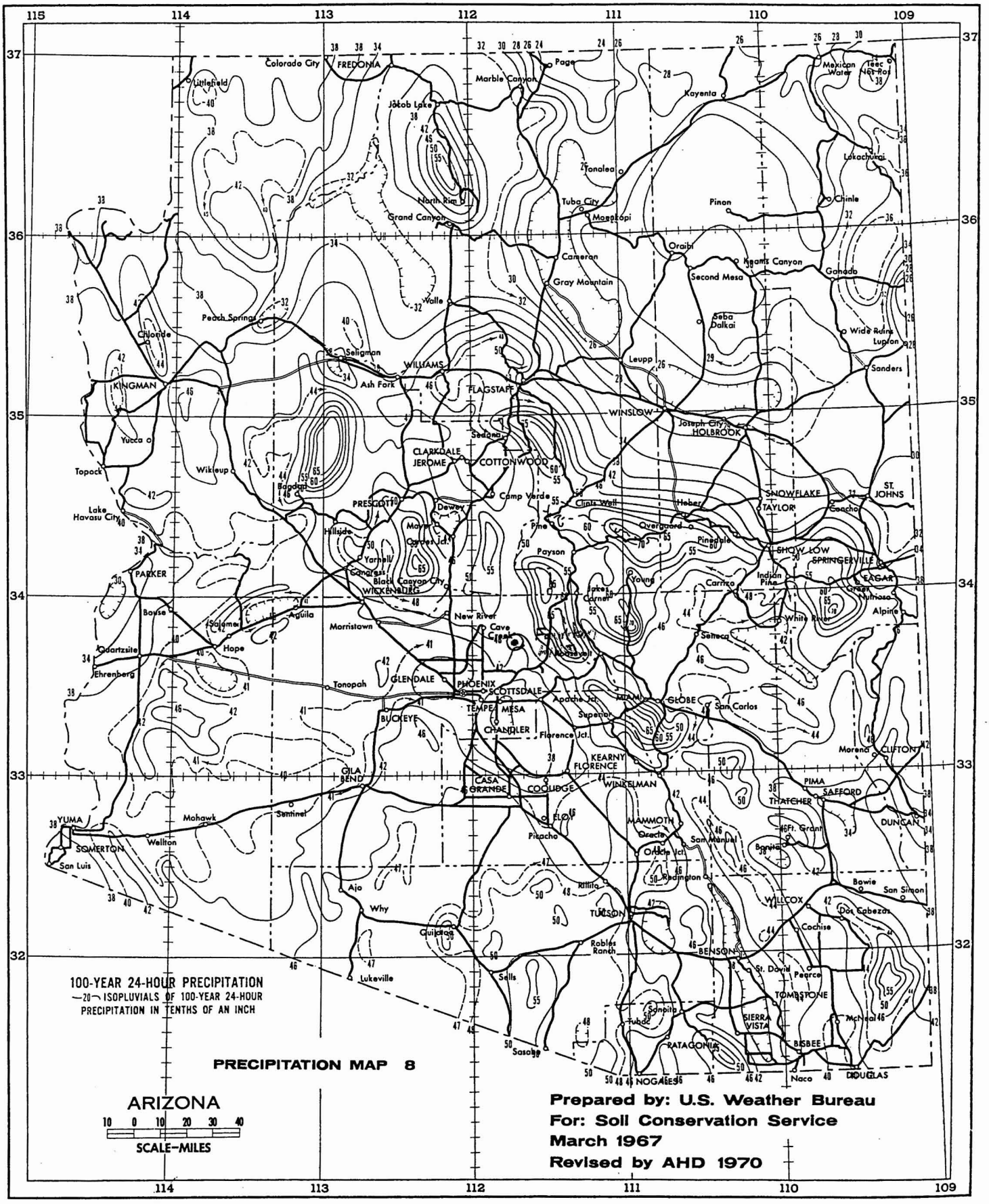
100-YEAR 24-HOUR PRECIPITATION
—20— ISOPLUVIALS OF 100-YEAR 24-HOUR PRECIPITATION IN TENTHS OF AN INCH
PRECIPITATION MAP 8
ARIZONA
10 0 10 20 30 40
SCALE-MILES
Prepared by: U.S. Weather Bureau
For: Soil Conservation Service
March 1967
Revised by AHD 1970
Colorado City
FREDONIA
Page
Marble Canyon
Kayenta
Mexican Water
Teec Nos Pos
Littlefield
Jacob Lake
Tonalea
Lukachukai
North Rim
Grand Canyon
Tuba City
Moenkopi
Pinon
Chinle
Oraibi
Cameron
Keams Canyon
Second Mesa
Ganado
Gray Mountain
Valle
Peach Springs
Seba Dalkai
Wide Ruins
Lupton
Chloride
Seligman
WILLIAMS
Leupp
Sanders
KINGMAN
Ash Fork
FLAGSTAFF
WINSLOW
Joseph City
HOLBROOK
Yucca
Sedona
CLARKDALE
JEROME
COTTONWOOD
Topock
Wikieup
Bagdad
Camp Verde
Clints Well
Heber
SNOWFLAKE
TAYLOR
ST. JOHNS
Coache
Lake Havasu City
PRESCOTT
Dewey
Hillside
Mayer
Cordes Jct.
Pine
Overgaard
Pinedale
SHOW LOW
SPRINGERVILLE
EAGAR
Yarnell
Camarosa
Black Canyon City
Payson
Young
Carrizo
Indian Pine
Greer
Nutrioso
PARKER
WICKENBURG
Lakes Corner
Aguila
Salome
New River
Cave Creek
White River
Alpine
Bouse
Morristown
Seneca
Quartzsite
Hope
Ehrenberg
Tonopah
GLENDALE
PHOENIX
SCOTTSDALE
Apache Jct.
MIAMI
GLOBE
San Carlos
TEMPE
MESA
Superior
BUCKEYE
CHANDLER
Florence Jct.
Morenci
CLIFTON
KEARNY
FLORENCE
GILA BEND
CASA GRANDE
COOLIDGE
WINKELMAN
PIMA
SAFFORD
THATCHER
YUMA
Mohawk
Sentinel
ELOY
MAMMOTH
Oracle
San Manuel
DUNCAN
SOMERTON
Wellton
Picacho
Oracle Jct.
Ft. Grant
San Luis
Bonita
Ajo
Rillito
Redington
Bowie
San Simon
Why
TUCSON
WILLCOX
Dos Cabezas
Quijotoa
Robles Ranch
Cochise
BENSON
Lukeville
Sells
St. David
Pearce
TOMBSTONE
Sonoita
Tubac
SIERRA VISTA
McNeal
BISBEE
PATAGONIA
Sasabe
NOGALES
Naco
DOUGLAS

ESTIMATION OF PMP

Client	Anderson-Nelson, Inc.		
Job	Fountain Hills (Efluent Lakes Hydrology)	**Job #**	
By	HAA	**Date**	17-Nov-94
Check		**Date**	

PMP CALCULATIONS

Area	1.98
Latitude	33 44'
Longitude	111 44'
Elevation	1620

1 Average 1-hr 1-mi2 PMP (Figure 4.5) — 11.5 in.

2a Reduction for elevation. (No adjustment for elevations up to 5,000 feet: 5% decrease per 1,000 feet above 5,000 feet — 100 %

2b Multiply step 1 by step 2a — 11.5 in.

3 Average 6/1 ratio for drainage(figure 4.7) — 1.24

	Duration (hr)									
	1/4	1/2	3/4	1	2	3	4	5	6	
4 Duration variation for 6/1-hr ratio of step 3 (table 4.4)	74	89	95	100	111.6	117	121	123	124	%
5 1-mi^2 PMP for indicated duration (step 2b X step 4)	8.51	10.24	10.9	11.5	12.83	13.5	13.9	14.1	14.3	in.
6 Aeral reduction (figure 4.9)	95	97	97	97.5	97.5	98	98	98.5	98.5	%
7 Aeral reduction PMP (steps 5 X 6)	8.085	9.928	10.6	11.213	12.51	13.2	13.6	13.9	14	in.
8 Incremental PMP (successive Substraction in step 7)				11.2	1.301	0.72	0.38	0.27	0.16	in.
	8.085	1.843	0.67	0.6152	} 15-min. increments					
9 Time sequence of incr-mental PMP according to:	EMR110-2-1411									
Hourly increment (table 4.7)				0.1586	0.383	1.3	11.2	0.72	0.27	in.
Four largest 15-min. Increments (table 4.8)				8.0845	1.843	0.67	0.62			in.

Client	Anderson-Nelson, Inc.		
Job	Fountain Hills (Efluent Lakes Hydrology)	**Job #**	
By	HAA	**Date**	17-Nov-94
Check		**Date**	

PMP CALCULATIONS

Cumulative Hourly and maximum 15-min PMP

Time (Hour)	15-min PMP	Hourly PMP	Cumulative PMP
0			0.00
1.00		0.16	0.16
2.00		0.38	0.54
3.00		1.30	1.84
3.25	8.08		9.93
3.50	1.84		11.77
3.75	0.67		12.44
4.00	0.62	11.20	13.05
5.00		0.72	13.77
6.00		0.27	14.05

Cumulative PMP Distribution

Time (hours)	Cumulative Depth (in)	Unit Cumulative Dept
0.00	0.00	0.0000
0.25	0.01	0.0007
0.50	0.02	0.0014
0.75	0.08	0.0057
1.00	0.16	0.0113
1.25	0.22	0.0157
1.50	0.32	0.0228
1.75	0.41	0.0292
2.00	0.54	0.0386
2.25	0.75	0.0534
2.50	1.00	0.0712
2.75	1.38	0.0982
3.00	1.84	0.1312
3.25	9.93	0.7067
3.50	11.77	0.8380
3.75	12.44	0.8856
4.00	13.05	0.9294
4.25	13.27	0.9447
4.50	13.47	0.9590
4.75	13.64	0.9711
5.00	13.77	0.9805
5.25	13.84	0.9853
5.50	13.92	0.9910
5.75	13.98	0.9953
6.00	14.05	1.0000

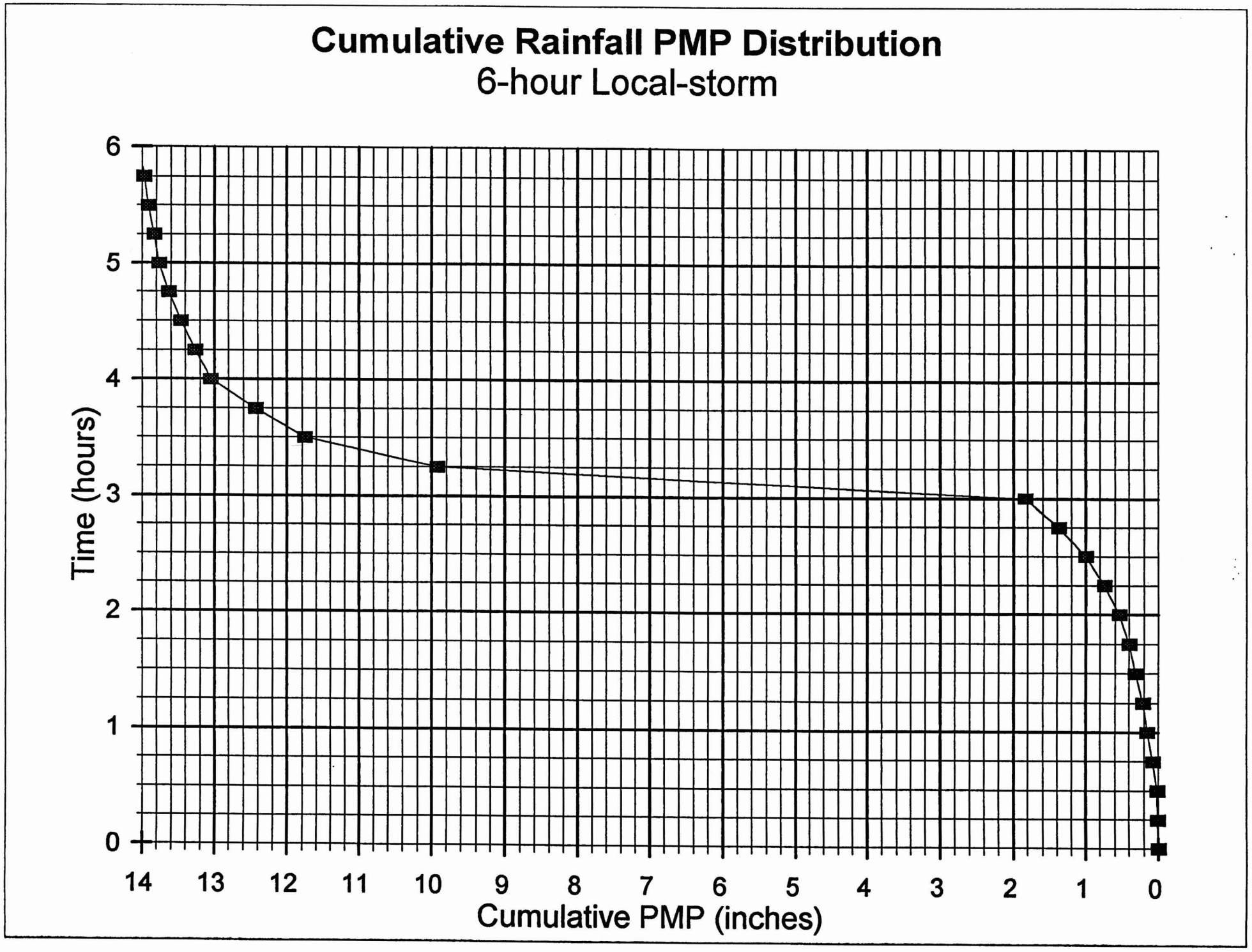
Cumulative Rainfall PMP Distribution
6-hour Local-storm
Time (hours)
0
1
2
3
4
5
6
14
13
12
11
10
9
8
7
6
5
4
3
2
1
0
Cumulative PMP (inches)

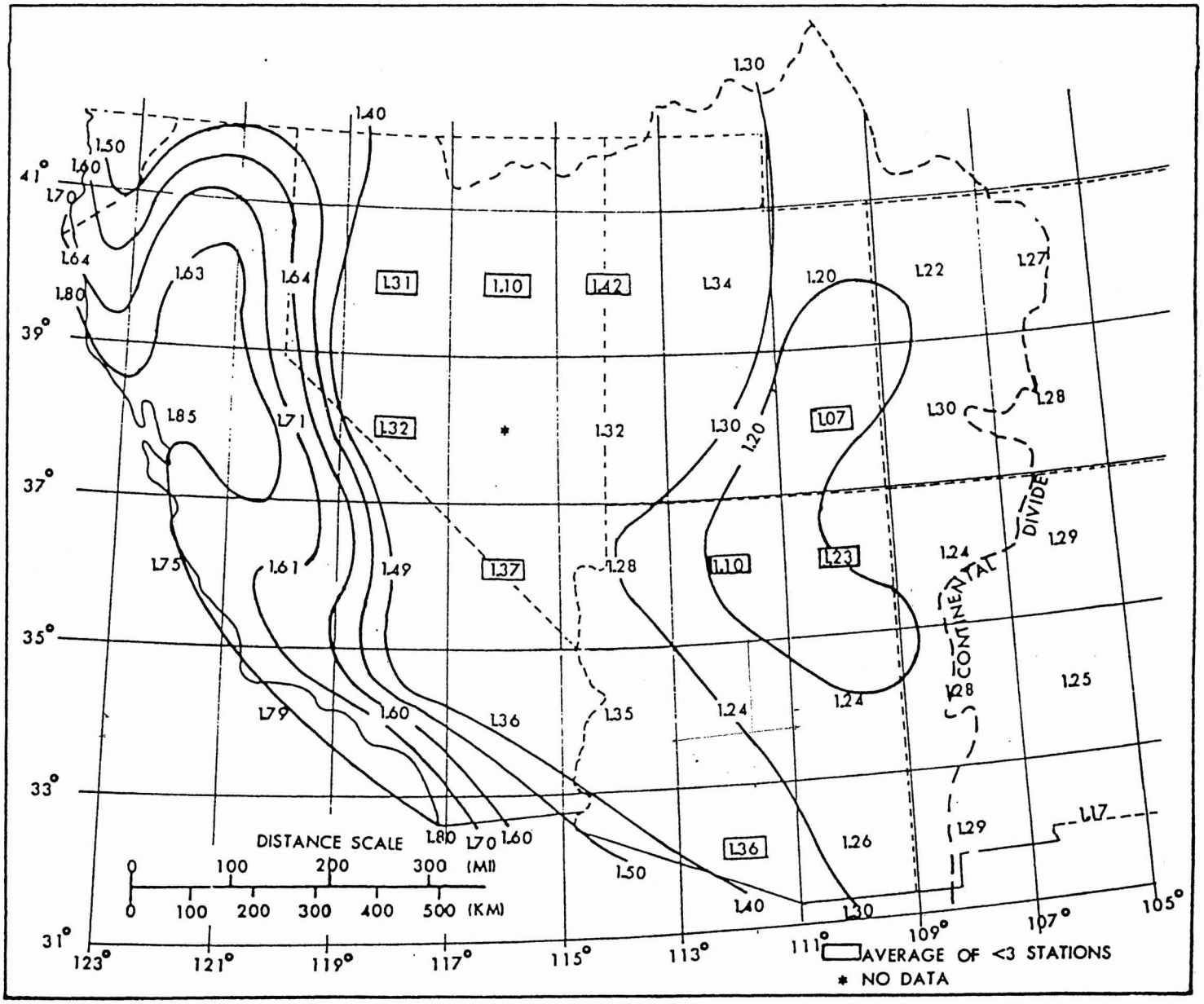

Figure 4.7.--Analysis of 6/1-hr ratios of averaged maximum station data (plotted at midpoints of a 2° latitude-longitude grid).

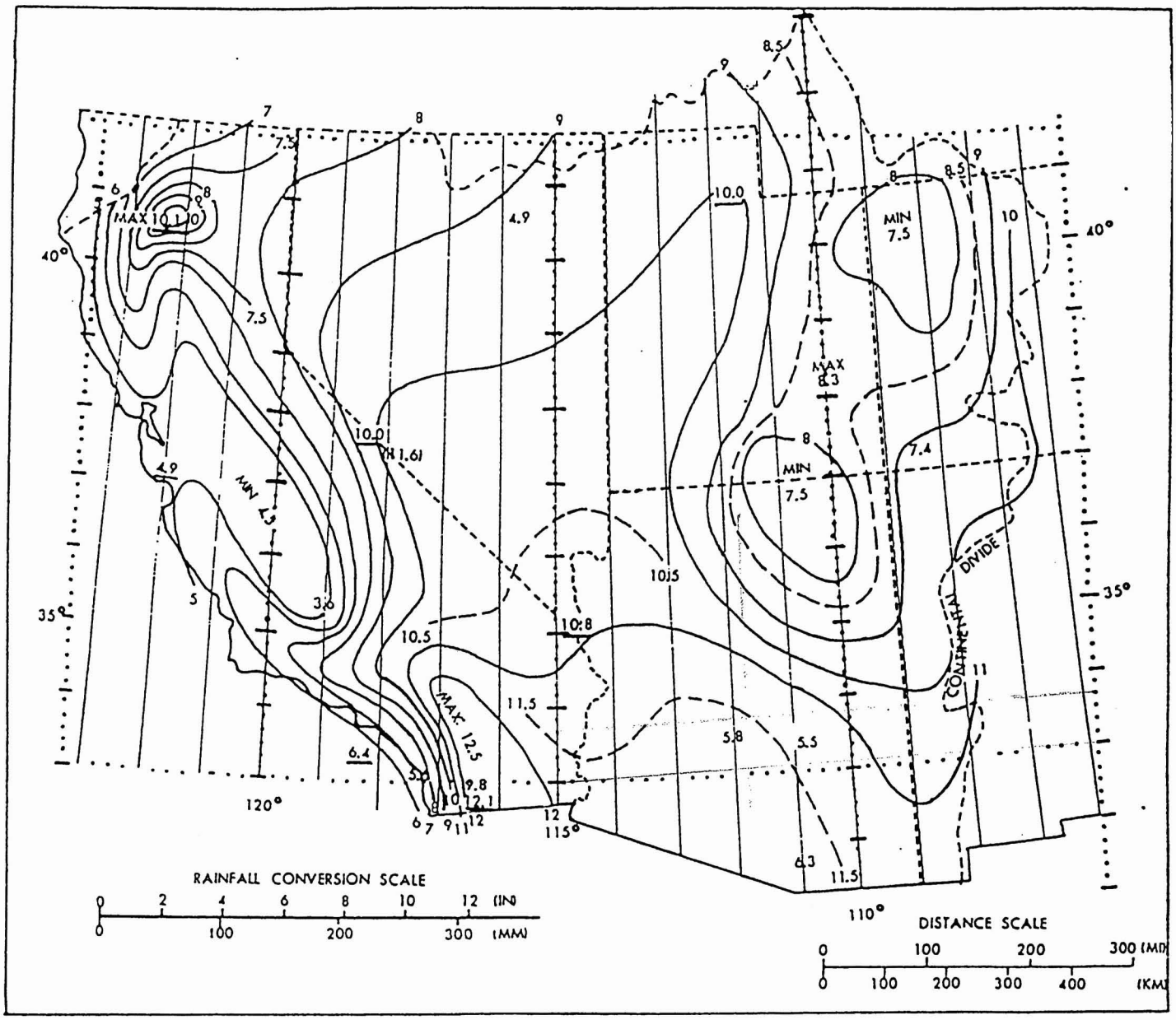

Figure 4.5--Local-storm PMP for 1 mi^2 (2.6 km^2) 1 hr. Directly applicable for locations between sea level and 5000 ft (1524 m). Elevation adjustment must be applied for locations above 5000 ft.

Table 4.4.--Durational variation of 1-mi^2 (2.6-km^2) local-storm PMP in percent of 1-hr PMP (see figure 4.3)

6/1-hr ratio	Duration (hr) 1/4	1/2	3/4	1	2	3	4	5	6
1.1	86	93	97	100	107	109	110	110	110
1.2	74	89	95	100	110	115	118	119	120
1.3	74	89	95	100	114	121	125	128	130
1.4	63	83	93	100	118	126	132	137	140
1.5	63	83	93	100	121	132	140	145	150
1.6	43	70	87	100	124	138	147	154	160
1.8	43	70	87	100	130	149	161	171	180
2.0	43	70	87	100	137	161	175	188	200

1.24

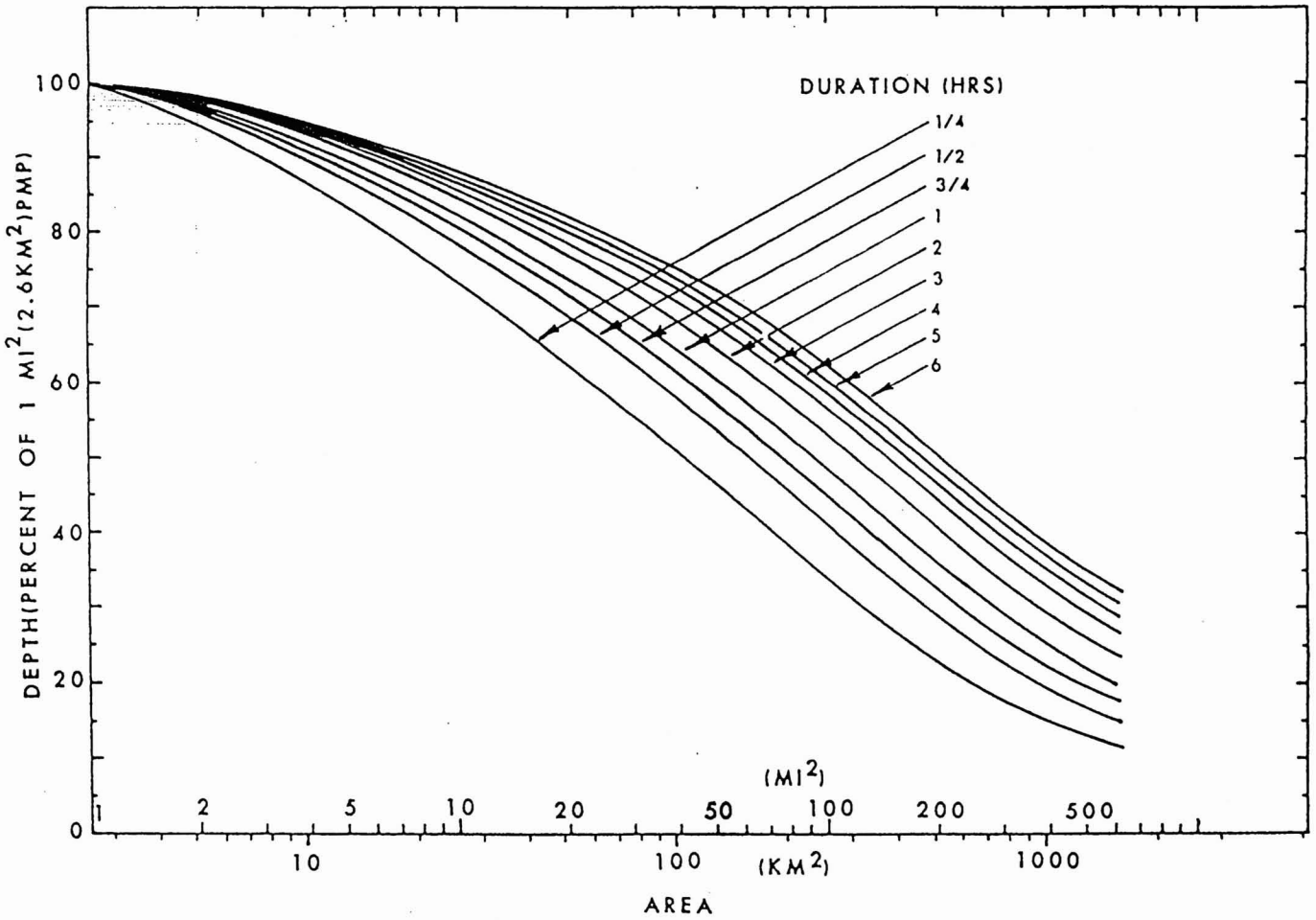

Figure 4.9.--Adopted depth-area relations for local-storm PMP.

Table 4.7.--Time sequence for hourly incremental PMP in 6-hr storm

Increment	HMR No. 5[1]	EM1110-2-1411[2]
	Sequence Position	
Largest hourly amount	Third	Fourth
2nd largest	Fourth	Third
3rd largest	Second	Fifth
4th largest	Fifth	Second
5th largest	First	Last
least	Last	First

[1]U. S. Weather Bureau 1947.
[2]U. S. Corps of Engineers 1952.

Table 4.8.--Time sequence for 15-min incremental PMP within 1 hr.

Increment	Sequence Position
Largest 15-min amount	First
2nd largest	Second
3rd largest	Third
least	Last

APPENDIX D

HEC-1 OUTPUTS
WITHOUT PROPOSED LAKES

APPENDIX D.1

HEC-1 OUTPUT FOR 10-YEAR, 6-HOUR STORM

```
****************************************
*                                      *
*   FLOOD HYDROGRAPH PACKAGE  (HEC-1)  *
*              MAY   1991              *
*           VERSION 4.0.1E             *
*                                      *
* RUN DATE  11/17/94  TIME  09:17:07   *
*                                      *
****************************************
```

```
****************************************
*                                      *
*    U.S. ARMY CORPS OF ENGINEERS      *
*    HYDROLOGIC ENGINEERING CENTER     *
*          609 SECOND STREET           *
*       DAVIS, CALIFORNIA 95616        *
*           (916) 551-1748             *
*                                      *
****************************************
```

```
X     X  XXXXXXX   XXXXX          X
X     X  X        X     X        XX
X     X  X        X              X
XXXXXXX  XXXX     X       XXXXX  X
X     X  X        X              X
X     X  X        X     X        X
X     X  XXXXXXX   XXXXX         XXX
```

THIS PROGRAM REPLACES ALL PREVIOUS VERSIONS OF HEC-1 KNOWN AS HEC1 (JAN 73), HEC1GS, HEC1DB, AND HEC1KW.

THE DEFINITIONS OF VARIABLES -RTIMP- AND -RTIOR- HAVE CHANGED FROM THOSE USED WITH THE 1973-STYLE INPUT STRUCTURE.
THE DEFINITION OF -AMSKK- ON RM-CARD WAS CHANGED WITH REVISIONS DATED 28 SEP 81. THIS IS THE FORTRAN77 VERSION
NEW OPTIONS: DAMBREAK OUTFLOW SUBMERGENCE , SINGLE EVENT DAMAGE CALCULATION, DSS:WRITE STAGE FREQUENCY,
DSS:READ TIME SERIES AT DESIRED CALCULATION INTERVAL LOSS RATE:GREEN AND AMPT INFILTRATION
KINEMATIC WAVE: NEW FINITE DIFFERENCE ALGORITHM

```
LINE          ID.......1.......2.......3.......4.......5.......6.......7.......8.......9......10

  1           ID   Fountain Hills efluent lakes study
  2           ID   Prepared for Anderson-Nelson, Inc.
  3           ID
  4           ID   Cereus Wash
  5           ID   10-Yr 6-Hr Storm
  6           ID   Developed conditions without lakes
  7           ID   2 minute time inteval
  8           ID
  9           ID   AGK Engineers (HAA) Nov 17, 1994
 10           ID
 11           IT      2                    300
 12           IO      5
 13           IN     15
 14           JD   2.20    0.01
 15           PC   .000    .008    .016    .025    .033    .041    .050    .058    .066    .074
 16           PC   .087    .099    .118    .138    .216    .377    .834    .911    .931    .950
 17           PC   .962    .972    .983    .991   1.000
 18           JD   2.19    0.50
 19           JD   2.16    2.80
 20           PC   .000    .009    .016    .025    .034    .042    .051    .059    .067    .076
 21           PC   .087    .100    .120    .163    .252    .451    .694    .837    .900    .938
 22           PC   .950    .963    .975    .988   1.000
 23           JD   2.03    16.0
 24           PC   .000    .015    .020    .030    .048    .063    .076    .090    .105    .119
 25           PC   .135    .152    .175    .222    .304    .472    .670    .796    .868    .912
 26           PC   .946    .960    .973    .987   1.000

 27           KK   120A
 28           KM   SUB-BASIN 120A
 29           KM   6-HOUR RAINFALL, PATTERN NO. 1.00 WAS USED TO FIND TC & R FOR THIS BASIN
 30           KM   THIS BASIN USED RAINFALL REDUCTION FACTOR OF1.000
 31           BA    .016
 32           LG    .100    .250   5.700    .170  45.000
 33           UC    .183    .336
 34           UA       0       5      16      30      65      77      84      90      94      97
 35           UA     100

 36           KK   120B
 37           KM   SUB-BASIN 120B
 38           KM   6-HOUR RAINFALL, PATTERN NO. 1.00 WAS USED TO FIND TC & R FOR THIS BASIN
 39           KM   THIS BASIN USED RAINFALL REDUCTION FACTOR OF .999
 40           BA    .053
 41           LG    .150    .250   5.700    .207  45.000
 42           UC    .233    .215
 43           UA       0       5      16      30      65      77      84      90      94      97
 44           UA     100

 45           KK   160A
 46           KM   SUB-BASIN 160A
 47           KM   6-HOUR RAINFALL, PATTERN NO. 1.00 WAS USED TO FIND TC & R FOR THIS BASIN
 48           KM   THIS BASIN USED RAINFALL REDUCTION FACTOR OF1.000
 49           BA    .006
 50           LG    .100    .250   5.700    .170  45.000
 51           UC    .096    .099
 52           UA       0       5      16      30      65      77      84      90      94      97
```

```
LINE          ID.......1.......2.......3.......4.......5.......6.......7.......8.......9......10

  53          UA     100

  54          KK   R160A
  55          KM   ROUTE 160A THROUGH SUB-BASIN 120B TO CON. POINT CER1
  56          RS       5    FLOW       0
  57          RC    0.04    0.04    0.04    2300   0.054
  58          RX    9920    9942    9975    9997   10003   10050   10060   10085
  59          RY    1810    1806    1800    1791    1791    1802    1804    1810

  60          KK    CER1
  61          KM   CEREUS WASH CONCENTRATION POINT 1 - COMBINE R160A, 120A AND 120B
  62          HC       3

  63          KK   SCER1
  64          KM   ROUTE CER1 THROUGH 60" CULVERT AT FOUNTAIN HILLS BLVD.
  65          KO       3
  66          RS       1    ELEV    1756
  67          SQ       0      37     115     222     355    1000
  68          SE    1757  1759.5    1762    1767  1778.7    1779
  69          SA     .04     .23    2.68
  70          SE    1756    1760    1780

  71          KK    120C
  72          KM   SUB-BASIN 120C
  73          KM   6-HOUR RAINFALL, PATTERN NO. 1.00 WAS USED TO FIND TC & R FOR THIS BASIN
  74          KM   THIS BASIN USED RAINFALL REDUCTION FACTOR OF1.000
  75          BA    .005
  76          LG    .100    .250   5.700    .170  41.330
  77          UC    .121    .176
  78          UA       0       5      16      30      65      77      84      90      94      97
  79          UA     100

  80          KK    CER2
  81          KM   CEREUS WASH CONCENTRATION POINT 2 - COMBINE SCER1 WITH SUB-BASIN 120C
  82          HC       2

  83          KK   RCER2
  84          KM   ROUTE CER2 THROUGH SUB-BASIN 120D
  85          RS       4    FLOW       0
  86          RC     .04     .04     .04    2012    .029
  87          RX    9927    9935    9965   10000   10007   10035   10063   10080
  88          RY    1720    1718    1712    1706    1706    1710    1716    1720

  89          KK    120D
  90          KM   SUB-BASIN 120D
  91          KM   6-HOUR RAINFALL, PATTERN NO. 1.00 WAS USED TO FIND TC & R FOR THIS BASIN
  92          KM   THIS BASIN USED RAINFALL REDUCTION FACTOR OF .999
  93          BA    .069
  94          LG    .132    .250   5.800    .187  24.210
  95          UC    .213    .191
  96          UA       0       5      16      30      65      77      84      90      94      97
  97          UA     100
```

```
LINE          ID.......1.......2.......3.......4.......5.......6.......7.......8.......9......10

  98          KK   *CER3
  99          KM   CEREUS WASH CONCENTRATION POINT *3 - COMBINE RCER2, 120D
 100          HC       2

 101          KK    120H
 102          KM   SUB-BASIN 120H
 103          KM   6-HOUR RAINFALL, PATTERN NO. 1.00 WAS USED TO FIND TC & R FOR THIS BASIN
 104          KM   THIS BASIN USED RAINFALL REDUCTION FACTOR OF1.000
 105          BA    .005
 106          LG    .085    .250   5.800    .160  39.120
 107          UC    .154    .373
 108          UA       0       5      16      30      65      77      84      90      94      97
 109          UA     100

 110          KK   R120H
 111          KM   ROUTE 120H THROUGH 120I
 112          RS       1    FLOW       0
 113          RC     .04     .04     .04     557    .115
 114          RX    9870    9910    9960    9999   10001   10080   10125   10225
 115          RY    1732    1726    1718    1712    1712    1718    1724    1730

 116          KK    120I
 117          KM   SUB-BASIN 120I
 118          KM   6-HOUR RAINFALL, PATTERN NO. 1.00 WAS USED TO FIND TC & R FOR THIS BASIN
 119          KM   THIS BASIN USED RAINFALL REDUCTION FACTOR OF1.000
 120          BA    .007
 121          LG    .150    .250   5.700    .207  25.000
 122          UC    .154    .199
 123          UA       0       5      16      30      65      77      84      90      94      97
 124          UA     100

 125          KK   CER3A
 126          KM   COMBINE R120H AND 120I
 127          HC       2

 128          KK  SCER3A
 129          KM   ROUTE CER3A BY STAGE DISCHARGE TO CER3 - PONDED STORAGE
 130          RS       1    ELEV    1694
 131          SQ       0    25.2     160     473    1019    1850
 132          SE    1700    1701    1702    1703    1704    1705
 133          SA       0     .22     .22
 134          SE    1694    1700    1710

 135          KK    CER3
 136          KM   CEREUS WASH CONCENTRATION POINT 3 - COMBINE (RCER2, 120D),RCER3A
 137          HC       2

 138          KK   SCER3
 139          KM   ROUTE CER3 THROUGH 1-84" CULVERTS AT SHEA BLVD.
 140          KO       3
 141          RS       1    ELEV  1687.3
 142          SQ       0      96     300     610     850     900
 143          SE  1687.3  1690.8  1694.3  1701.3    1710    1711
 144          SA       0     .08    1.47    4.98
```

```
LINE          ID.......1.......2.......3.......4.......5.......6.......7.......8.......9......10

 145          SE  1687.3    1692    1700    1710

 146          KK   RCER3
 147          KM   ROUTE CER3 THROUGH SUB-AREA 120E TO CONFLUENCE WITH WALNUT WASH
 148          RS       1    FLOW       0
 149          RC     .04     .04     .04     768    .034
 150          RX    9920    9974    9985    9999   10001   10021   10135   10222
 151          RY    1690    1678    1674    1670    1670    1674    1680    1690

 152          KK    120E
 153          KM   SUB-BASIN 120E
 154          KM   6-HOUR RAINFALL, PATTERN NO. 1.00 WAS USED TO FIND TC & R FOR THIS BASIN
 155          KM   THIS BASIN USED RAINFALL REDUCTION FACTOR OF1.000
 156          BA    .018
 157          LG    .050    .250   5.800    .160  20.530
 158          UC    .204    .342
 159          UA       0       5      16      30      65      77      84      90      94      97
 160          UA     100

 161          KK   *CER4
 162          KM   CEREUS WASH CONCENTRATION POINT *4 - RCER3, 120E
 163          HC       2

 164          KK    126A
 165          KM   SUB-BASIN 126A
 166          KM   6-HOUR RAINFALL, PATTERN NO. 1.00 WAS USED TO FIND TC & R FOR THIS BASIN
 167          KM   THIS BASIN USED RAINFALL REDUCTION FACTOR OF1.000
 168          BA    .007
 169          LG    .100    .250   5.700    .170  45.000
 170          UC    .142    .197
 171          UA       0       5      16      30      65      77      84      90      94      97
 172          UA     100

 173          KK   R126A
 174          KM   ROUTE SUB-BASIN 126A THROUGH SUB-BASIN 126B
 175          RS       4    FLOW       0
 176          RC     .04    .017     .04    2348    .035
 177          RX    9975    9980    9985    9986   10014   10015   10020   10025
 178          RY  1922.5  1922.5  1922.5    1922    1922  1922.5  1922.5  1922.5

 179          KK    126B
 180          KM   SUB-BASIN 126B
 181          KM   6-HOUR RAINFALL, PATTERN NO. 1.00 WAS USED TO FIND TC & R FOR THIS BASIN
 182          KM   THIS BASIN USED RAINFALL REDUCTION FACTOR OF1.000
 183          BA    .021
 184          LG    .100    .250   5.700    .179  45.000
 185          UC    .192    .292
 186          UA       0       5      16      30      65      77      84      90      94      97
 187          UA     100
```

```
LINE          ID.......1.......2.......3.......4.......5.......6.......7.......8.......9......10

 188          KK     WW1
 189          KM   WALNUT WASH CONCENTRATION POINT 1 - COMBINE R126A AND 126B
 190          HC       2

 191          KK    RWW1
 192          KM   ROUTE WW1 THROUGH SUB-BASIN 126D
 193          RS       1    FLOW       0
 194          RC     .04     .04     .04     546    .019
 195          RX    9895    9935    9955    9962   10003   10010   10020   10045
 196          RY    1830    1818    1816    1813    1813    1816    1820    1830

 197          KK    126C
 198          KM   SUB-BASIN 126C
 199          KM   6-HOUR RAINFALL, PATTERN NO. 1.00 WAS USED TO FIND TC & R FOR THIS BASIN
 200          KM   THIS BASIN USED RAINFALL REDUCTION FACTOR OF .998
 201          BA    .142
 202          LG    .140    .320   5.700    .204  13.770
 203          UC    .354    .350
 204          UA       0       5      16      30      65      77      84      90      94      97
 205          UA     100

 206          KK   R126C
 207          KM   ROUTE 126C THROUGH SUB-BASIN 126D
 208          RS       2    FLOW       0
 209          RC     .04     .04     .04    1291    .029
 210          RX    9895    9935    9955    9962   10003   10010   10020   10045
 211          RY    1830    1818    1816    1813    1813    1816    1820    1830

 212          KK    126D
 213          KM   SUB-BASIN 126D
 214          KM   6-HOUR RAINFALL, PATTERN NO. 1.00 WAS USED TO FIND TC & R FOR THIS BASIN
 215          KM   THIS BASIN USED RAINFALL REDUCTION FACTOR OF1.000
 216          BA    .028
 217          LG    .146    .250   5.700    .204  23.160
 218          UC    .196    .187
 219          UA       0       5      16      30      65      77      84      90      94      97
 220          UA     100

 221          KK     WW3
 222          KM   WALNUT WASH CONCENTRATION POINT 3 - RWW1 AND RWW2 AND 126D
 223          HC       3

 224          KK    RWW3
 225          KM   ROUTE WW3 THROUGH 126H
 226          RS       2    FLOW       0
 227          RC     .04     .04     .04     894    .027
 228          RX    9910    9940    9985    9995   10020   10080   10105   10145
 229          RY    1810    1800    1790    1786    1786    1792    1800    1810
```

```
LINE          ID.......1.......2.......3.......4.......5.......6.......7.......8.......9......10

 230          KK   126E
 231          KM   SUB-BASIN 126E
 232          KM   6-HOUR RAINFALL, PATTERN NO. 1.00 WAS USED TO FIND TC & R FOR THIS BASIN
 233          KM   THIS BASIN USED RAINFALL REDUCTION FACTOR OF .999
 234          BA    .090
 235          LG    .150    .360   6.800    .134  21.880
 236          UC    .242    .187
 237          UA      0       3       5       8      12      20      43      75      90      96
 238          UA     100

 239          KK   126F
 240          KM   SUB-BASIN 126F
 241          KM   6-HOUR RAINFALL, PATTERN NO. 1.00 WAS USED TO FIND TC & R FOR THIS BASIN
 242          KM   THIS BASIN USED RAINFALL REDUCTION FACTOR OF .999
 243          BA    .055
 244          LG    .150    .330   7.300    .110  30.000
 245          UC    .208    .169
 246          UA      0       3       5       8      12      20      43      75      90      96
 247          UA     100

 248          KK    WW4
 249          KM   WALNUT WASH CONCENTRATION POINT 4 - 126E AND 126F
 250          HC      2

 251          KK   RWW4
 252          KM   ROUTE WW4 THROUGH 126G
 253          RS      7    FLOW      0
 254          RC    .04     .04     .04    4158    .031
 255          RX   9870    9940    9980    9995   10005   10015   10040   10090
 256          RY   1820    1802    1800    1796    1796    1800    1810    1820

 257          KK   126G
 258          KM   SUB-BASIN 126G
 259          KM   6-HOUR RAINFALL, PATTERN NO. 1.00 WAS USED TO FIND TC & R FOR THIS BASIN
 260          KM   THIS BASIN USED RAINFALL REDUCTION FACTOR OF .998
 261          BA    .136
 262          LG    .150    .240   6.600    .146  27.550
 263          UC    .304    .273
 264          UA      0       5      16      30      65      77      84      90      94      97
 265          UA     100

 266          KK   126H
 267          KM   SUB-BASIN 126H
 268          KM   6-HOUR RAINFALL, PATTERN NO. 1.00 WAS USED TO FIND TC & R FOR THIS BASIN
 269          KM   THIS BASIN USED RAINFALL REDUCTION FACTOR OF1.000
 270          BA    .020
 271          LG    .127    .250   5.700    .199  28.710
 272          UC    .183    .194
 273          UA      0       5      16      30      65      77      84      90      94      97
 274          UA     100
```

```
LINE          ID.......1.......2.......3.......4.......5.......6.......7.......8.......9......10

 275          KK     WW5
 276          KM   WALNUT WASH CONCENTRATION POINT 5 - RWW3, RWW4, 126H AND 126G
 277          HC       4

 278          KK    RWW5
 279          KM   ROUTE WW5 THROUGH 126I
 280          RS       3    FLOW       0
 281          RC     .04     .04     .04    1740     .02
 282          RX    9790    9860    9910    9975   10010   10055   10090   10150
 283          RY    1780    1764    1762    1758    1758    1766    1768    1780

 284          KK    126I
 285          KM   SUB-BASIN 126I
 286          KM   6-HOUR RAINFALL, PATTERN NO. 1.00 WAS USED TO FIND TC & R FOR THIS BASIN
 287          KM   THIS BASIN USED RAINFALL REDUCTION FACTOR OF .999
 288          BA    .082
 289          LG    .133    .190   6.600    .144  38.280
 290          UC    .225    .163
 291          UA       0       5      16      30      65      77      84      90      94      97
 292          UA     100

 293          KK    126J
 294          KM   SUB-BASIN 126J
 295          KM   6-HOUR RAINFALL, PATTERN NO. 1.00 WAS USED TO FIND TC & R FOR THIS BASIN
 296          KM   THIS BASIN USED RAINFALL REDUCTION FACTOR OF1.000
 297          BA    .002
 298          LG    .100    .250   5.700    .179  45.000
 299          UC    .133    .299
 300          UA       0       5      16      30      65      77      84      90      94      97
 301          UA     100

 302          KK   R126J
 303          KM   ROUTE 126J THROUGH 126I
 304          RS       4    FLOW       0
 305          RC     .04     .02     .04    2299    .066
 306          RX    9790    9860    9910    9975   10010   10055   10090   10150
 307          RY    1780    1764    1762    1758    1758    1766    1768    1780

 308          KK     WW6
 309          KM   WALNUT WASH CONCENTRATION POINT 6 - RWW5, R126J AND 126I
 310          HC       3

 311          KK    RWW6
 312          KM   ROUTE WW6 THROUGH 126M
 313          RS       2    FLOW       0
 314          RC     .04     .04     .04    1206    .019
 315          RX    9830    9890    9925    9985   10005   10020   10055   10100
 316          RY    1738    1736    1722    1720    1720    1722    1730    1740
```

```
LINE          ID.......1.......2.......3.......4.......5.......6.......7.......8.......9......10

 317          KK   126M
 318          KM  SUB-BASIN 126M
 319          KM  6-HOUR RAINFALL, PATTERN NO. 1.00 WAS USED TO FIND TC & R FOR THIS BASIN
 320          KM  THIS BASIN USED RAINFALL REDUCTION FACTOR OF1.000
 321          BA   .025
 322          LG   .144    .230   6.200    .169  25.370
 323          UC   .208    .235
 324          UA      0       5      16      30      65      77      84      90      94      97
 325          UA    100

 326          KK   *WW7
 327          KM  WALNUT WASH CONCENTRATION POIT *7 - RWW6, 126M
 328          HC      2

 329          KK   126K
 330          KM  SUB-BASIN 126K
 331          KM  6-HOUR RAINFALL, PATTERN NO. 1.00 WAS USED TO FIND TC & R FOR THIS BASIN
 332          KM  THIS BASIN USED RAINFALL REDUCTION FACTOR OF1.000
 333          BA   .012
 334          LG   .100    .250   5.700    .179  45.000
 335          UC   .158    .263
 336          UA      0       5      16      30      65      77      84      90      94      97
 337          UA    100

 338          KK  R126K
 339          KM  ROUTE 126K THROUGH 126M
 340          RS      2    FLOW       0
 341          RC    .04     .04     .04    1061    .072
 342          RX   9830    9890    9925    9985   10005   10020   10055   10100
 343          RY   1738    1736    1722    1720    1720    1722    1730    1740

 344          KK   126L
 345          KM  SUB-BASIN 126L
 346          KM  6-HOUR RAINFALL, PATTERN NO. 1.00 WAS USED TO FIND TC & R FOR THIS BASIN
 347          KM  THIS BASIN USED RAINFALL REDUCTION FACTOR OF1.000
 348          BA   .023
 349          LG   .150    .210   6.400    .159  38.360
 350          UC   .217    .274
 351          UA      0       5      16      30      65      77      84      90      94      97
 352          UA    100

 353          KK    WW7
 354          KM  WALNUT WASH CONCENTRATION POINT 7 - (RWW6, 126M), R126K, 126L
 355          HC      3

 356          KK   SWW7
 357          KM  ROUTE WW7 THROUGH 10'BY 10' RCB UNDER SHEA BLVD.
 358          RS      1    ELEV    1704
 359          SQ      0     290     800    1650    1850
 360          SE   1704    1709    1714    1724    1727
 361          SA      0     .01     .44    2.44
 362          SE   1704    1710    1716  1728.5
```

```
LINE          ID.......1.......2.......3.......4.......5.......6.......7.......8.......9......10

 363          KK   127A
 364          KM   SUB-BASIN 127A
 365          KM   6-HOUR RAINFALL, PATTERN NO. 1.00 WAS USED TO FIND TC & R FOR THIS BASIN
 366          KM   THIS BASIN USED RAINFALL REDUCTION FACTOR OF1.000
 367          BA    .028
 368          LG    .150    .250   5.700    .207  15.000
 369          UC    .204    .215
 370          UA      0       5      16      30      65      77      84      90      94      97
 371          UA     100

 372          KK   127B
 373          KM   SUB-BASIN 127B
 374          KM   6-HOUR RAINFALL, PATTERN NO. 1.00 WAS USED TO FIND TC & R FOR THIS BASIN
 375          KM   THIS BASIN USED RAINFALL REDUCTION FACTOR OF .999
 376          BA    .039
 377          LG    .100    .250   5.700    .189  15.000
 378          UC    .192    .159
 379          UA      0       5      16      30      65      77      84      90      94      97
 380          UA     100

 381          KK   CAP1
 382          KM   CAP WASH CONCENTRATION POINT 1 - SUB-BASINS 127A AND 127B
 383          HC      2

 384          KK   RCAP1
 385          KM   ROUTE CAP1 THROUGH 127D
 386          RS      2    FLOW      0
 387          RC    .04     .04     .04    1146    .026
 388          RX   9870    9910    9955    9985   10000   10020   10050   10100
 389          RY   1760    1756    1750    1742    1742    1744    1750    1760

 390          KK   127C
 391          KM   SUB-BASIN 127C
 392          KM   6-HOUR RAINFALL, PATTERN NO. 1.00 WAS USED TO FIND TC & R FOR THIS BASIN
 393          KM   THIS BASIN USED RAINFALL REDUCTION FACTOR OF .999
 394          BA    .042
 395          LG    .150    .170   6.800    .134  33.710
 396          UC    .208    .186
 397          UA      0       5      16      30      65      77      84      90      94      97
 398          UA     100

 399          KK   127D
 400          KM   SUB-BASIN 127D
 401          KM   6-HOUR RAINFALL, PATTERN NO. 1.00 WAS USED TO FIND TC & R FOR THIS BASIN
 402          KM   THIS BASIN USED RAINFALL REDUCTION FACTOR OF1.000
 403          BA    .024
 404          LG    .150    .250   5.800    .195  15.000
 405          UC    .188    .185
 406          UA      0       5      16      30      65      77      84      90      94      97
 407          UA     100
```

```
LINE          ID.......1.......2.......3.......4.......5.......6.......7.......8.......9......10

 408          KK   CAP2
 409          KM   CAP WASH CONCENTRATION POINT 2 - RCAP1, 127C, AND 127D
 410          HC      3

 411          KK   RCAP2
 412          KM   ROUTE CAP2 THROUGH 127H
 413          RS      1    FLOW      0
 414          RC    .04     .04     .04     545    .017
 415          RX   9895    9940    9950    9995   10005   10047   10105   10180
 416          RY   1741    1740    1738    1732    1732    1736    1739    1748

 417          KK   127E
 418          KM   SUB-BASIN 127E
 419          KM   6-HOUR RAINFALL, PATTERN NO. 1.00 WAS USED TO FIND TC & R FOR THIS BASIN
 420          KM   THIS BASIN USED RAINFALL REDUCTION FACTOR OF .999
 421          BA   .103
 422          LG   .150    .204   6.800    .134  28.410
 423          UC   .258    .216
 424          UA      0       5      16      30      65      77      84      90      94      97
 425          UA    100

 426          KK   127F
 427          KM   SUB-BASIN 127F
 428          KM   6-HOUR RAINFALL, PATTERN NO. 1.00 WAS USED TO FIND TC & R FOR THIS BASIN
 429          KM   THIS BASIN USED RAINFALL REDUCTION FACTOR OF .998
 430          BA   .147
 431          LG   .150    .229   7.300    .110  40.450
 432          UC   .283    .230
 433          UA      0       5      16      30      65      77      84      90      94      97
 434          UA    100

 435          KK   CAP3
 436          KM   CAP WASH CONCENTRATION POINT 3 - SUB-BASINS 127E AND 127F
 437          HC      2

 438          KK   RCAP3
 439          KM   ROUTE CAP3 THROUGH 127G
 440          RS      2    FLOW      0
 441          RC    .04     .04     .04    1253    .025
 442          RX   9870    9920    9940    9974   10007   10055   10075   10130
 443          RY   1780    1770    1768    1758    1758    1770    1774    1780

 444          KK   127G
 445          KM   SUB-BASIN 127G
 446          KM   6-HOUR RAINFALL, PATTERN NO. 1.00 WAS USED TO FIND TC & R FOR THIS BASIN
 447          KM   THIS BASIN USED RAINFALL REDUCTION FACTOR OF .999
 448          BA   .057
 449          LG   .150    .150   7.000    .122  45.570
 450          UC   .204    .156
 451          UA      0       5      16      30      65      77      84      90      94      97
 452          UA    100
```

```
LINE          ID.......1.......2.......3.......4.......5.......6.......7.......8.......9......10

 453          KK    CAP4
 454          KM   CAP WASH CONCENTRATION POINT 4 - RCAP3 AND SUB-BASIN 127G
 455          HC       2

 456          KK   SCAP4
 457          KM   ROUTE CAP4 THROUGH 2-72" CULVERTS UNDER SHEA BLVD.
 458          KO       3
 459          RS       1    ELEV  1742.2
 460          SQ       0     130     410     830    1300
 461          SE  1742.2  1742.5  1748.2  1754.2  1766.5
 462          SA       0    .008    .037    3.31
 463          SE  1742.2    1746    1752    1766

 464          KK  R2CAP4
 465          KM   ROUTE CAP4 THROUGH 127I
 466          RS       1    FLOW       0
 467          RC     .04     .04     .04     743     .02
 468          RX    9800    9837    9985    9995   10020   10070   10180   10200
 469          RY    1760  1745.5    1738    1736    1736    1742    1752    1756

 470          KK    127I
 471          KM   SUB-BASIN 127I
 472          KM   6-HOUR RAINFALL, PATTERN NO. 1.00 WAS USED TO FIND TC & R FOR THIS BASIN
 473          KM   THIS BASIN USED RAINFALL REDUCTION FACTOR OF1.000
 474          BA    .010
 475          LG    .100    .250   6.000    .158  15.000
 476          UC    .158    .292
 477          UA       0       5      16      30      65      77      84      90      94      97
 478          UA     100

 479          KK   *CAP5
 480          KM   CAP WASH CONCENTRATION POINT *5 - RCAP4, 127I
 481          HC       2

 482          KK    127H
 483          KM   SUB-BASIN 127H
 484          KM   6-HOUR RAINFALL, PATTERN NO. 1.00 WAS USED TO FIND TC & R FOR THIS BASIN
 485          KM   THIS BASIN USED RAINFALL REDUCTION FACTOR OF1.000
 486          BA    .018
 487          LG    .150    .150   7.000    .122  36.740
 488          UC    .171    .180
 489          UA       0       5      16      30      65      77      84      90      94      97
 490          UA     100

 491          KK    CAP5
 492          KM   CAP WASH CONCENTRATION POINT 5 - RCAP4, 127H, (RCAP4,127I)
 493          HC       3

 494          KK   RCAP5
 495          KM   ROUTE CAP5 THROUGH 127J TO WALNUT WASH (WW8)
 496          RS       2    FLOW       0
 497          RC     .04     .04     .04    1382    .018
 498          RX    9895    9937    9960    9982   10005   10030   10075   10125
 499          RY    1730    1714  1711.5    1710    1710    1714    1720    1730
```

```
LINE          ID.......1.......2.......3.......4.......5.......6.......7.......8.......9......10

 500          KK   127J
 501          KM  SUB-BASIN 127J
 502          KM  6-HOUR RAINFALL, PATTERN NO. 1.00 WAS USED TO FIND TC & R FOR THIS BASIN
 503          KM  THIS BASIN USED RAINFALL REDUCTION FACTOR OF1.000
 504          BA   .032
 505          LG   .100    .170   6.800    .122  31.060
 506          UC   .204    .212
 507          UA     0       5      16      30      65      77      84      90      94      97
 508          UA   100

 509          KK   CAP6
 510          KM  CAP WASH COMBINATION POINT 6 - RCAP5, 127J
 511          HC     2

 512          KK    WW8
 513          KM  WALNUT WASH CONCENTRATION POINT 8 - SWW7,CAP6
 514          KM  CONFLUENCE OF CAP WASH AND WALNUT WASH
 515          HC     2

 516          KK   RWW8
 517          KM  ROUTE WW8 THROUGH 126N TO CONFLUENCE WITH CEREUS WASH
 518          RS     5    FLOW       0
 519          RC   .04     .04     .04    2789    .016
 520          RX  9850    9915    9930    9990   10005   10030   10142   10205
 521          RY  1700    1686    1682    1678    1678    1680 1685.25    1700

 522          KK   126N
 523          KM  SUB-BASIN 126N
 524          KM  6-HOUR RAINFALL, PATTERN NO. 1.00 WAS USED TO FIND TC & R FOR THIS BASIN
 525          KM  THIS BASIN USED RAINFALL REDUCTION FACTOR OF .999
 526          BA   .077
 527          LG   .150    .230   6.200    .171  27.920
 528          UC   .271    .272
 529          UA     0       5      16      30      65      77      84      90      94      97
 530          UA   100

 531          KK    WW9
 532          KM   WALNUT WASH CONCENTRATION POIT 9 - RWW8, 126N
 533          HC     2

 534          KK   CER4
 535          KM  CEREUS WASH CONCENTRATION POINT 4 - (RCER3,120E), (WW9, 126N)
 536          KM  CONFLUENCE OF CEREUS WASH AND WALNUT WASH
 537          HC     2

 538          KK  RCER4
 539          KM  ROUTE CER4 THROUGH SUB-BASIN 120F TO CONFLUENCE WITH CHUKAR WASH
 540          RS     2    FLOW       0
 541          RC   .04     .04     .04    1183    .015
 542          RX  9967    9973    9982    9999   10055   10135   10235   10325
 543          RY  1766    1762    1756    1744    1744    1756  1753.5    1756
```

```
LINE          ID.......1.......2.......3.......4.......5.......6.......7.......8.......9......10

 544          KK    120F
 545          KM   SUB-BASIN 120F
 546          KM   6-HOUR RAINFALL, PATTERN NO. 1.00 WAS USED TO FIND TC & R FOR THIS BASIN
 547          KM   THIS BASIN USED RAINFALL REDUCTION FACTOR OF1.000
 548          BA    .022
 549          LG    .150    .250   6.000    .183  34.960
 550          UC    .162    .174
 551          UA       0       5      16      30      65      77      84      90      94      97
 552          UA     100

 553          KK   *CER5
 554          KM   CEREUS WASH CONCENTRATION POIT *5 - RCER4, 120F
 555          HC       2

 556          KK    125A
 557          KM   SUB-BASIN 125A
 558          KM   6-HOUR RAINFALL, PATTERN NO. 1.00 WAS USED TO FIND TC & R FOR THIS BASIN
 559          KM   THIS BASIN USED RAINFALL REDUCTION FACTOR OF .999
 560          BA    .077
 561          LG    .150    .150   7.300    .110  40.500
 562          UC    .279    .298
 563          UA       0       5      16      30      65      77      84      90      94      97
 564          UA     100

 565          KK    125B
 566          KM   SUB-BASIN 125B
 567          KM   6-HOUR RAINFALL, PATTERN NO. 1.00 WAS USED TO FIND TC & R FOR THIS BASIN
 568          KM   THIS BASIN USED RAINFALL REDUCTION FACTOR OF .999
 569          BA    .113
 570          LG    .150    .150   7.300    .110  40.250
 571          UC    .292    .254
 572          UA       0       5      16      30      65      77      84      90      94      97
 573          UA     100

 574          KK    CHK1
 575          KM   CHUKAR WASH CONCENTRATION POINT 1 - SUB-BASINS 125A AND 125B
 576          HC       2

 577          KK   RCHK1
 578          KM   ROUTE CHK1 THROUGH 125D
 579          RS       1    FLOW       0
 580          RC     .04     .04     .04     544    .004
 581          RX    9830    9880    9915    9955   10005   10032   10140   10190
 582          RY    1700    1696    1690    1682    1682    1690    1690    1698

 583          KK    125C
 584          KM   SUB-BASIN 125C
 585          KM   6-HOUR RAINFALL, PATTERN NO. 1.00 WAS USED TO FIND TC & R FOR THIS BASIN
 586          KM   THIS BASIN USED RAINFALL REDUCTION FACTOR OF1.000
 587          BA    .030
 588          LG    .150    .150   7.300    .110  40.060
 589          UC    .200    .198
 590          UA       0       5      16      30      65      77      84      90      94      97
 591          UA     100
```

```
LINE          ID.......1.......2.......3.......4.......5.......6.......7.......8.......9......10

 592          KK   R125C
 593          KM   ROUTE 125C THROUGH SUB-BASIN 125D TO CON. POINT CHK2
 594          RS       1    FLOW       0
 595          RC    0.04    0.04    0.04     290  0.0001
 596          RX    9905    9930    9945    9972   10025   10080   10090   10130
 597          RY    1680    1674    1670  1665.5  1665.5    1668    1670    1680

 598          KK    125D
 599          KM   SUB-BASIN 125D
 600          KM   6-HOUR RAINFALL, PATTERN NO. 1.00 WAS USED TO FIND TC & R FOR THIS BASIN
 601          KM   THIS BASIN USED RAINFALL REDUCTION FACTOR OF1.000
 602          BA    .018
 603          LG    .100    .210   6.400    .159  37.030
 604          UC    .471    .454
 605          UA       0       5      16      30      65      77      84      90      94      97
 606          UA     100

 607          KK    CHK2
 608          KM   CHUKAR WASH CONCENTRATION POINT 2 - RCHK1 AND SUB BASINS 125C AND 125D
 609          HC       3

 610          KK  R2CHK2
 611          KM   ROUTE CHK2 THROUGH SUB-BASIN 125E TO CONFLUENCE WITH CEREUS WASH
 612          RS       3    FLOW       0
 613          RC     .04     .04     .04    1780    .027
 614          RX    9905    9930    9945    9972   10025   10080   10090   10130
 615          RY    1680    1674    1670  1665.5  1665.5    1668    1670    1680

 616          KK    125E
 617          KM   SUB-BASIN 125E
 618          KM   6-HOUR RAINFALL, PATTERN NO. 1.00 WAS USED TO FIND TC & R FOR THIS BASIN
 619          KM   THIS BASIN USED RAINFALL REDUCTION FACTOR OF .999
 620          BA    .047
 621          LG    .150    .230   6.200    .171  42.460
 622          UC    .196    .170
 623          UA       0       5      16      30      65      77      84      90      94      97
 624          UA     100

 625          KK    CHK3
 626          KM   CHUKAR WASH CONCENTRATON POINT 3 - RCHK2, 125E
 627          HC       2

 628          KK    CER5
 629          KM   CEREUS WASH CONCENTRATION POINT 5 - (RCER4, 120F), CHK3
 630          KM   CONFLUENCE OF CHUKAR WASH AND CEREUS WASH
 631          HC       2

 632          KK   RCER5
 633          KM   ROUTE CEREUS WASH (CER5) THROUGH 120G TO CONFLUENCE WITH LOGAN WASH
 634          RS       2    FLOW       0
 635          RC     .04     .04     .04    1119    .017
 636          RX    9885    9930    9970    9999   10001   10006   10200   10299
 637          RY    1650    1645    1640    1630    1630    1634    1631    1640
```

```
LINE          ID.......1.......2.......3.......4.......5.......6.......7.......8.......9......10

 638          KK    120G
 639          KM   SUB-BASIN 120G
 640          KM   6-HOUR RAINFALL, PATTERN NO. 1.00 WAS USED TO FIND TC & R FOR THIS BASIN
 641          KM   THIS BASIN USED RAINFALL REDUCTION FACTOR OF1.000
 642          BA    .037
 643          LG    .150    .170   6.800    .134  37.920
 644          UC    .204    .192
 645          UA       0       5      16      30      65      77      84      90      94      97
 646          UA     100

 647          KK   *CER6
 648          KM   CEREUS WASH CONCENTRATION POINT *6 - RCER5, 120G
 649          HC       2

 650          KK    124A
 651          KM   SUB-BASIN 124A
 652          KM   6-HOUR RAINFALL, PATTERN NO. 1.00 WAS USED TO FIND TC & R FOR THIS BASIN
 653          KM   THIS BASIN USED RAINFALL REDUCTION FACTOR OF .999
 654          BA    .071
 655          LG    .150    .150   7.000    .122  36.170
 656          UC    .254    .252
 657          UA       0       5      16      30      65      77      84      90      94      97
 658          UA     100

 659          KK    124B
 660          KM   SUB-BASIN 124B
 661          KM   6-HOUR RAINFALL, PATTERN NO. 1.00 WAS USED TO FIND TC & R FOR THIS BASIN
 662          KM   THIS BASIN USED RAINFALL REDUCTION FACTOR OF .999
 663          BA    .043
 664          LG    .150    .170   6.800    .134  38.180
 665          UC    .179    .126
 666          UA       0       5      16      30      65      77      84      90      94      97
 667          UA     100

 668          KK    LOG1
 669          KM   LOGAN WASH CONCENTRATION POINT 1 - SUB-BASINS 124A AND 124B
 670          HC       2

 671          KK   RLOG1
 672          KM   ROUTE LOG1 THROUGH 124D
 673          RS       1    FLOW       0
 674          RC     .04     .04     .04     647    .015
 675          RX    9920    9940    9965    9993   10008   10040   10057   10090
 676          RY    1670    1666    1660  1655.5  1655.5    1658    1662    1663

 677          KK    124D
 678          KM   SUB-BASIN 124D
 679          KM   6-HOUR RAINFALL, PATTERN NO. 1.00 WAS USED TO FIND TC & R FOR THIS BASIN
 680          KM   THIS BASIN USED RAINFALL REDUCTION FACTOR OF1.000
 681          BA    .009
 682          LG    .150    .230   6.200    .171  50.840
 683          UC    .213    .439
 684          UA       0       5      16      30      65      77      84      90      94      97
 685          UA     100
```

```
LINE          ID.......1.......2.......3.......4.......5.......6.......7.......8.......9......10

 686          KK   *LOG2
 687          KM   LOGAN WASH CONCENTRATION POINT *2 - (RLOG1, 124D)
 688          HC      2

 689          KK    124C
 690          KM   SUB-BASIN 124C
 691          KM   6-HOUR RAINFALL, PATTERN NO. 1.00 WAS USED TO FIND TC & R FOR THIS BASIN
 692          KM   THIS BASIN USED RAINFALL REDUCTION FACTOR OF1.000
 693          BA    .020
 694          LG    .150    .230   6.200    .171  43.540
 695          UC    .213    .278
 696          UA      0       5      16      30      65      77      84      90      94      97
 697          UA     100

 698          KK    LOG2
 699          KM   LOGAN WASH CONCENTRATION POINT 2 - (RLOG1, 124D),124C
 700          HC      2

 701          KK   RLOG2
 702          KM   ROUTE LOG2 THROUGH 124E TO CONFLUENCE WITH CEREUS WASH
 703          RS      3    FLOW       0
 704          RC    .04     .04     .04    1436    .014
 705          RX   9885    9920    9965   10005   10030   10060   10090   10140
 706          RY   1660    1650    1642    1640    1640    1650    1660    1670

 707          KK    124E
 708          KM   SUB-BASIN 124E
 709          KM   6-HOUR RAINFALL, PATTERN NO. 1.00 WAS USED TO FIND TC & R FOR THIS BASIN
 710          KM   THIS BASIN USED RAINFALL REDUCTION FACTOR OF .999
 711          BA    .051
 712          LG    .150    .210   6.400    .159  49.150
 713          UC    .217    .192
 714          UA      0       5      16      30      65      77      84      90      94      97
 715          UA     100

 716          KK    LOG3
 717          KM   LOGAN WASH CONCENTRATION POINT 3 - RLOG2, 124E
 718          HC      2

 719          KK    CER6
 720          KM   CEREUS WASH CONCENTRATION POINT 6 - (RCER5, 120G), RLOG2
 721          KM   CONFLUENCE OF LOGAN AND CEREUS WASH
 722          HC      2

 723          KK   RCER6
 724          KM   ROUTE CER6 THROUGH 120L
 725          RS      3    FLOW       0
 726          RC    .04     .04     .04    1481    .011
 727          RX   9945    9955    9970    9990   10020   10150   10180   10210
 728          RY   1628    1627    1626    1612    1612    1618    1624    1630
```

```
LINE          ID.......1.......2.......3.......4.......5.......6.......7.......8.......9......10

 729          KK    120L
 730          KM   SUB-BASIN 120L
 731          KM   6-HOUR RAINFALL, PATTERN NO. 1.00 WAS USED TO FIND TC & R FOR THIS BASIN
 732          KM   THIS BASIN USED RAINFALL REDUCTION FACTOR OF1.000
 733          BA    .036
 734          LG    .150    .150   7.000    .122  66.320
 735          UC    .204    .199
 736          UA       0       5      16      30      65      77      84      90      94      97
 737          UA     100

 738          KK   *CER7
 739          KM   CEREUS WASH PONCENTRATION POINT *7 - RCER6, 120L
 740          HC       2

 741          KK    120J
 742          KM   SUB-BASIN 120J
 743          KM   6-HOUR RAINFALL, PATTERN NO. 1.00 WAS USED TO FIND TC & R FOR THIS BASIN
 744          KM   THIS BASIN USED RAINFALL REDUCTION FACTOR OF1.000
 745          BA    .006
 746          LG    .100    .250   5.700    .170  25.000
 747          UC    .225    .524
 748          UA       0       5      16      30      65      77      84      90      94      97
 749          UA     100

 750          KK   R120J
 751          KM   ROUTE 120J THROUGH 120K
 752          RS       1    FLOW       0
 753          RC     .04     .04     .04     624    .159
 754          RX    9840    9940    9985    9993   10005   10040   10047   10110
 755          RY    1710    1690    1685  1682.5  1682.5    1690    1692    1710

 756          KK    120K
 757          KM   SUB-BASIN 120K
 758          KM   6-HOUR RAINFALL, PATTERN NO. 1.00 WAS USED TO FIND TC & R FOR THIS BASIN
 759          KM   THIS BASIN USED RAINFALL REDUCTION FACTOR OF1.000
 760          BA    .034
 761          LG    .150    .250   5.700    .207  25.000
 762          UC    .237    .262
 763          UA       0       5      16      30      65      77      84      90      94      97
 764          UA     100

 765          KK   CER7A
 766          KM   CEREUS WASH CONCENTRATION POINT 7A- R120J AND 120K
 767          HC       2

 768          KK  SCER7A
 769          KM   ROUTE CER7A THROUGH 48" CULVERT UNDER SHEA BLVD.
 770          KO       3
 771          RS       1    ELEV  1640.9
 772          SQ       0      24      73     150     240
 773          SE  1640.9  1642.9  1644.9  1648.9    1658
 774          SA       0     .81
 775          SE  1640.9    1658
```

```
LINE          ID.......1.......2.......3.......4.......5.......6.......7.......8.......9......10

 776          KK  RCER7A
 777          KM   ROUTE CER7A THROUGH SUB-BASIN 120M TO CON. POINT CER7
 778          RS       3    FLOW       0
 779          RC     .04     .04     .04    1400    .027
 780          RX    9895    9920    9950    9975   10015   10110   10140   10200
 781          RY    1640    1636    1632    1628    1628    1632    1634    1640

 782          KK    120M
 783          KM   SUB-BASIN 120M
 784          KM   6-HOUR RAINFALL, PATTERN NO. 1.00 WAS USED TO FIND TC & R FOR THIS BASIN
 785          KM   THIS BASIN USED RAINFALL REDUCTION FACTOR OF .999
 786          BA    .040
 787          LG    .100    .250   5.800    .186  43.850
 788          UC    .242    .360
 789          UA       0       5      16      30      65      77      84      90      94      97
 790          UA     100

 791          KK    123B
 792          KM   SUB-BASIN 123B
 793          KM   6-HOUR RAINFALL, PATTERN NO. 1.00 WAS USED TO FIND TC & R FOR THIS BASIN
 794          KM   THIS BASIN USED RAINFALL REDUCTION FACTOR OF1.000
 795          BA    .019
 796          LG    .150    .250   5.700    .207  25.000
 797          UC    .175    .174
 798          UA       0       5      16      30      65      77      84      90      94      97
 799          UA     100

 800          KK   S123B
 801          KM   ROUTE 123B THROUGH 36" CMP CULVERT UNDER SHEA BLVD
 802          KO       3
 803          RS       1    ELEV  1624.7
 804          SQ       0      11      33      63      77
 805          SE  1624.7  1626.2  1627.7  1630.7  1633.1
 806          SA       0   0.004    0.01
 807          SE  1624.7    1628    1629

 808          KK   R123B
 809          KM   ROUTE S123B THROUGH SUB-BASIN 120M TO WASH
 810          RS       2    FLOW       0
 811          RC    0.04    0.04    0.04     412   0.034
 812          RX    9965    9970    9980    9995   10005   10080  100115   10160
 813          RY    1630    1628    1623    1616    1616    1624    1628    1634

 814          KK   R123B
 815          KM   ROUTE R123B THROUGH SUB-BASIN 120M (IN WASH) TO CON. POINT CER7
 816          RS       1    FLOW       0
 817          RC    0.04    0.04    0.04     193    0.36
 818          RX    9895    9920    9950    9975   10015   10110   10140   10200
 819          RY    1640    1636    1632    1628    1628    1632    1634    1640
```

```
LINE          ID.......1.......2.......3.......4.......5.......6.......7.......8.......9......10

 820          KK    CER7
 821          KM   CEREUS WASH CONCENTRATION POINT 7 - (RCER6, 120L), RCER7A, 120M 123B
 822          HC       4

 823          KK   RCER7
 824          KM   ROUTE CER7 THROUGH SUB-BASIN 120N
 825          RS       4    FLOW       0
 826          RC     .04     .04     .04    2006    .013
 827          RX    9860    9910    9945    9985   10010   10150   10180   10300
 828          RY    1597    1596    1594    1582    1582    1586    1590    1592

 829          KK    120N
 830          KM   SUB-BASIN 120N
 831          KM   6-HOUR RAINFALL, PATTERN NO. 1.00 WAS USED TO FIND TC & R FOR THIS BASIN
 832          KM   THIS BASIN USED RAINFALL REDUCTION FACTOR OF .999
 833          BA    .044
 834          LG    .136    .150   7.000    .117  69.710
 835          UC    .183    .183
 836          UA       0       5      16      30      65      77      84      90      94      97
 837          UA     100

 838          KK   *CER8
 839          KM   CEREUS WASH CONCENTRATION POINT *8 - RCER7, 120N
 840          HC       2

 841          KK    123A
 842          KM   SUB-BASIN 123A
 843          KM   6-HOUR RAINFALL, PATTERN NO. 1.00 WAS USED TO FIND TC & R FOR THIS BASIN
 844          KM   THIS BASIN USED RAINFALL REDUCTION FACTOR OF .999
 845          BA    .075
 846          LG    .150    .250   5.700    .207  25.000
 847          UC    .246    .205
 848          UA       0       5      16      30      65      77      84      90      94      97
 849          UA     100

 850          KK   S123A
 851          KM   ROUTE 123A THROUGH 2 60" CULVERT AT TRAVINO DRIVE
 852          KO       3
 853          RS       1    ELEV  1594.5
 854          SQ       0      74     130     360     444
 855          SE  1594.5    1597  1599.5    1602  1604.5
 856          SA       0    0.01    0.69
 857          SE  1594.5    1596    1604

 858          KK    123D
 859          KM   SUB-BASIN 123D
 860          KM   6-HOUR RAINFALL, PATTERN NO. 1.00 WAS USED TO FIND TC & R FOR THIS BASIN
 861          KM   THIS BASIN USED RAINFALL REDUCTION FACTOR OF1.000
 862          BA    .010
 863          LG    .100    .250   5.700    .189  25.000
 864          UC    .225    .469
 865          UA       0       5      16      30      65      77      84      90      94      97
 866          UA     100
```

```
LINE          ID.......1.......2.......3.......4.......5.......6.......7.......8.......9......10

 867          KK    TRV1
 868          KM   TREVINO WASH CONCENTRATION POINT 1 - S123A AND 123D
 869          HC       2

 870          KK   STRV1
 871          KM   ROUTE TRV1 THROUGH 84" CMP CULVERT UNDER SHEA BLVD
 872          KO       3
 873          RS       1    ELEV  1588.7
 874          SQ       0      97     300     435     620
 875          SE  1588.7  1591.7  1595.7  1602.7    1598
 876          SA       0    0.01    0.14
 877          SE  1588.7    1589    1598

 878          KK   RTRV1
 879          KM   ROUTE TRV1 THROUGH SUB-BASIN 120N TO *CER8
 880          RS       2    FLOW       0
 881          RC     .04     .04     .04     971    .007
 882          RX    9860    9910    9945    9985   10010   10150   10180   10300
 883          RY    1597    1596    1594    1582    1582    1586    1590    1592

 884          KK    123C
 885          KM   SUB-BASIN 123C
 886          KM   6-HOUR RAINFALL, PATTERN NO. 1.00 WAS USED TO FIND TC & R FOR THIS BASIN
 887          KM   THIS BASIN USED RAINFALL REDUCTION FACTOR OF1.000
 888          BA    .003
 889          LG    .150    .250   5.700    .207  25.000
 890          UC    .092    .085
 891          UA       0       5      16      30      65      77      84      90      94      97
 892          UA     100

 893          KK   S123C
 894          KM   ROUTE 123C THROUGH 24" CMP CULVERT UNDER SHEA BLVD
 895          KO       3
 896          RS       1    ELEV    1618
 897          SQ       0       4      12      22      28
 898          SE    1618    1619    1620    1622    1624
 899          SA       0    0.01
 900          SE    1618    1623

 901          KK   R123C
 902          KM   ROUTE R123C THROUGH SUB-BASIN 120N TO WASH
 903          RS       1    FLOW       0
 904          RC    0.04    0.04    0.04     136   0.147
 905          RX    9965    9970    9980    9995   10005   10080   10115   10160
 906          RY    1630    1628    1623    1616    1616    1624    1628    1634

 907          KK   R123C
 908          KM   ROUTE 123C THROUGH SUB-BASIN 120N (WASH) TO CON. POINT CER8
 909          RS       5    FLOW       0
 910          RC    0.04    0.04    0.04    1688   0.012
 911          RX    9860    9910    9945    9985   10010   10150   10180   10300
 912          RY    1597    1596    1594    1582    1582    1586    1590    1592
```

```
LINE          ID.......1.......2.......3.......4.......5.......6.......7.......8.......9......10

 913          KK    CER8
 914          KM   CEREUS WASH CONCENTRATION POINT 8 - (RCER7, 120N), R2TREV, 123C
 915          KM   CONFLUENCE WITH TREVINO WASH
 916          HC       3

 917          KK   RCER8
 918          KM   ROUTE CER8 THROUGH SUB-BASIN 120Q
 919          RS       3    FLOW       0
 920          RC     .04     .04     .04    1703    .013
 921          RX    9890    9920    9980    9999   10001   10055   10095   10180
 922          RY    1571    1570    1558    1556    1556    1560    1570    1574

 923          KK    1200
 924          KM   SUB-BASIN 1200
 925          KM   6-HOUR RAINFALL, PATTERN NO. 1.00 WAS USED TO FIND TC & R FOR THIS BASIN
 926          KM   THIS BASIN USED RAINFALL REDUCTION FACTOR OF1.000
 927          BA    .008
 928          LG    .100    .250   5.700    .189  25.000
 929          UC    .117    .104
 930          UA       0       5      16      30      65      77      84      90      94      97
 931          UA     100

 932          KK   S1200
 933          KM   ROUTE 1200 THROUGH 2 30" CMP CULVERT UNDER SHEA BLVD
 934          KO       3
 935          RS       1    ELEV    1587
 936          SQ       0      15      44      90     180     400
 937          SE    1585  1588.8  1590.6  1594.2    1595    1596
 938          SA       0    0.01    0.02
 939          SE    1587    1589    1594

 940          KK   R1200
 941          KM   ROUTE 1200 TO WASH THROUGH 120Q
 942          RS       1    FLOW       0
 943          RC     .04     .04     .04     572    .028
 944          RX    9860    9910    9945    9985   10010   10150   10180   10300
 945          RY    1597    1596    1594    1582    1582    1586    1590    1590

 946          KK   R1200
 947          KM   ROUTE 1200 THROUGH SUB-BASIN 120Q FROM WASH TO *CER9
 948          RS       3    FLOW       0
 949          RC     .04     .04     .04    1503    .013
 950          RX    9890    9920    9980    9999   10001   10055   10095   10180
 951          RY    1571    1570    1558    1556    1556    1560    1570    1574

 952          KK    120Q
 953          KM   SUB-BASIN 120Q
 954          KM   6-HOUR RAINFALL, PATTERN NO. 1.00 WAS USED TO FIND TC & R FOR THIS BASIN
 955          KM   THIS BASIN USED RAINFALL REDUCTION FACTOR OF1.000
 956          BA    .035
 957          LG    .138    .150   7.000    .118  68.920
 958          UC    .208    .215
 959          UA       0       5      16      30      65      77      84      90      94      97
 960          UA     100
```

```
LINE          ID.......1.......2.......3.......4.......5.......6.......7.......8.......9......10

  961         KK   *CER9
  962         KM   CEREUS WASH CONCENTRATION POINT *9 - RCER8, 120Q, R120O
  963         HC       3

  964         KK    120P
  965         KM   SUB-BASIN 120P
  966         KM   6-HOUR RAINFALL, PATTERN NO. 1.00 WAS USED TO FIND TC & R FOR THIS BASIN
  967         KM   THIS BASIN USED RAINFALL REDUCTION FACTOR OF1.000
  968         BA    .028
  969         LG    .150    .250   5.700    .198  25.000
  970         UC    .117    .051
  971         UA       0       5      16      30      65      77      84      90      94      97
  972         UA     100

  973         KK   S120P
  974         KM   ROUTE 120P THROUGH 36" CMP CULVERT UNDER SHEA BLVD
  975         KO       3
  976         RS       1    ELEV    1580
  977         SQ       0      11      35      70
  978         SE    1580  1581.5    1583    1586
  979         SA       0    0.02    0.25
  980         SE    1580    1990    1593

  981         KK   R120P
  982         KM   ROUTE 120P THROUGH SUB-BASIN 120Q
  983         RS       2    FLOW       0
  984         RC     .04     .04     .04    1168    .025
  985         RX    9890    9920    9980    9999   10001   10055   10095   10180
  986         RY    1571    1570    1558    1556    1556  1560.5    1570    1574

  987         KK    CER9
  988         KM   CEREUS WASH CONCENTRATION POINT 9 - (RCER8, 120Q), R120P
  989         HC       2

  990         KK   SCER9
  991         KM   ROUTE CER9 THROUGH 2 60" CMP CULVERTS UNDER SAGUARO BLVD
  992         KO       3
  993         RS       1    ELEV 1549.75
  994         SQ       0      74     230     444     540
  995         SE  5489.8  1552.3  1554.8  1559.8  1563.2
  996         SA       0    0.02    0.48    2.43
  997         SE  1549.8    1552    1556    1564

  998         KK    120R
  999         KM   SUB-BASIN 120R
 1000         KM   6-HOUR RAINFALL, PATTERN NO. 1.00 WAS USED TO FIND TC & R FOR THIS BASIN
 1001         KM   THIS BASIN USED RAINFALL REDUCTION FACTOR OF1.000
 1002         BA    .012
 1003         LG    .140    .250   6.000    .178  76.820
 1004         UC    .200    .310
 1005         UA       0       5      16      30      65      77      84      90      94      97
 1006         UA     100
```

```
LINE          ID.......1.......2.......3.......4.......5.......6.......7.......8.......9......10

1007          KK    120S
1008          KM   SUB-BASIN 120S
1009          KM   6-HOUR RAINFALL, PATTERN NO. 1.00 WAS USED TO FIND TC & R FOR THIS BASIN
1010          KM   THIS BASIN USED RAINFALL REDUCTION FACTOR OF1.000
1011          BA    .007
1012          LG    .054    .150   8.000    .070  49.670
1013          UC    .162    .239
1014          UA       0       5      16      30      65      77      84      90      94      97
1015          UA     100

1016          KK   CER10
1017          KM   CEREUS WASH CONCENTRATION POINT 10- SCER9, 120R, 120S
1018          HC       3

1019          KK  RCER10
1020          KM   ROUTE CER10 THROUGH SUB-BASIN 120T
1021          RS       1    FLOW       0
1022          RC     .04     .04     .04     405     .01
1023          RX    9790    9815    9895    9965   10030   10065   10150   10220
1024          RY    1562    1560    1558    1546    1546    1558    1558    1562

1025          KK    120T
1026          KM   SUB-BASIN 120T
1027          KM   6-HOUR RAINFALL, PATTERN NO. 1.00 WAS USED TO FIND TC & R FOR THIS BASIN
1028          KM   THIS BASIN USED RAINFALL REDUCTION FACTOR OF1.000
1029          BA    .002
1030          LG    .150    .150   8.000    .085  80.750
1031          UC    .125    .201
1032          UA       0       5      16      30      65      77      84      90      94      97
1033          UA     100

1034          KK  *CER11
1035          KM   CEREUS WASH CONCENTRATION POINT *11 - RCER10, 120T
1036          HC       2

1037          KK    122C
1038          KM   SUB-BASIN 122C
1039          KM   6-HOUR RAINFALL, PATTERN NO. 1.00 WAS USED TO FIND TC & R FOR THIS BASIN
1040          KM   THIS BASIN USED RAINFALL REDUCTION FACTOR OF1.000
1041          BA    .014
1042          LG    .150    .250   6.000    .163  42.100
1043          UC    .158    .162
1044          UA       0       5      16      30      65      77      84      90      94      97
1045          UA     100

1046          KK   D122C
1047          KM   DIVERTION AT 122C INTO 122A
1048          DT  DO122C
1049          DI       0      10     100    1000
1050          DQ     0.5       5      50     500
```

```
LINE          ID.......1.......2.......3.......4.......5.......6.......7.......8.......9......10

1051          KK   R122C
1052          KM   ROUTE 122C THROUGH SUB-BASIN 122E TO CON. POINT LZR2B
1053          RS       2    FLOW       0
1054          RC    0.02    0.02    0.02    1000   0.032
1055          RX    9975    9980    9985    9986   10014   10015   10020   10025
1056          RY  1614.5  1614.5  1614.5    1614    1614  1614.5  1614.5  1614.5

1057          KK    122E
1058          KM   SUB-BASIN 122E
1059          KM   6-HOUR RAINFALL, PATTERN NO. 1.00 WAS USED TO FIND TC & R FOR THIS BASIN
1060          KM   THIS BASIN USED RAINFALL REDUCTION FACTOR OF1.000
1061          BA    .032
1062          LG    .144    .250   6.000    .168  57.930
1063          UC    .188    .169
1064          UA       0       5      16      30      65      77      84      90      94      97
1065          UA     100

1066          KK   LSR2B
1067          KM   LASER WASH CONSENTRATION POINT 2B - COMBINE RD122E, 122E
1068          HC       2

1069          KK  RLSR2B
1070          KM   ROUTE LASER WASH LSR2B THROUGH SUB-BASIN 120G TO CON. POINT LSR2
1071          RS       2    FLOW       0
1072          RC    0.02    0.02    0.02    1281   0.017
1073          RX    9780    9905    9955    9975   10015   10050   10060   10085
1074          RY    1600    1598    1596    1592    1590  1591.5    1592  1592.5

1075          KK    122D
1076          KM   SUB-BASIN 122D
1077          KM   6-HOUR RAINFALL, PATTERN NO. 1.00 WAS USED TO FIND TC & R FOR THIS BASIN
1078          KM   THIS BASIN USED RAINFALL REDUCTION FACTOR OF1.000
1079          BA    .032
1080          LG    .150    .250   6.000    .183  37.090
1081          UC    .192    .190
1082          UA       0       5      16      30      65      77      84      90      94      97
1083          UA     100

1084          KK   R122D
1085          KM   ROUTE 122D THROUGH SUB-BASIN 122G TO CON. POIT LSR2
1086          RS       2    FLOW       0
1087          RC    0.02    0.02    0.02     480   0.015
1088          RX    9780    9905    9955    9975   10015   10050   10060   10085
1089          RY    1600    1598    1596    1592    1590  1591.5    1592   10085

1090          KK    122F
1091          KM   SUB-BASIN 122F
1092          KM   6-HOUR RAINFALL, PATTERN NO. 1.00 WAS USED TO FIND TC & R FOR THIS BASIN
1093          KM   THIS BASIN USED RAINFALL REDUCTION FACTOR OF1.000
1094          BA    .010
1095          LG    .150    .230   6.200    .171  80.110
1096          UC    .196    .319
1097          UA       0       5      16      30      65      77      84      90      94      97
1098          UA     100
```

```
LINE          ID.......1.......2.......3.......4.......5.......6.......7.......8.......9......10

1099          KK   R122F
1100          KM   ROUTE 122F THROUGH SUB-BAASIN 122G TO CON. POINT LSR2
1101          RS       2    FLOW       0
1102          RC    0.02    0.02    0.02     430   0.032
1103          RX    9780    9905    9955    9975   10015   10050   10060   10085
1104          RY    1600    1598    1596    1592    1590  1591.5    1592  1592.5

1105          KK    122G
1106          KM   SUB-BASIN 122G
1107          KM   6-HOUR RAINFALL, PATTERN NO. 1.00 WAS USED TO FIND TC & R FOR THIS BASIN
1108          KM   THIS BASIN USED RAINFALL REDUCTION FACTOR OF1.000
1109          BA    .022
1110          LG    .100    .250   6.000    .158  75.000
1111          UC    .125    .124
1112          UA       0       5      16      30      65      77      84      90      94      97
1113          UA     100

1114          KK    LSR2
1115          KM   LASER DRAIN CONCENTRATION POINT 2 - RLSR2B, R122F, R122D, 122D
1116          HC       4

1117          KK   RLSR2
1118          KM   ROUTE LSR2 THROUGH SUB-BASIN 122I TO CON. POINT LSR3
1119          RS       2    FLOW       0
1120          RC    0.02    0.02    0.02     826   0.017
1121          RX    9790    9875    9895    9985   10015   10070   10130   10170
1122          RY    1576    1576  1574.5    1571  1570.5    1574    1576    1578

1123          KK    122A
1124          KM   SUB-BASIN 122A
1125          KM   6-HOUR RAINFALL, PATTERN NO. 1.00 WAS USED TO FIND TC & R FOR THIS BASIN
1126          KM   THIS BASIN USED RAINFALL REDUCTION FACTOR OF1.000
1127          BA    .020
1128          LG    .115    .250   6.000    .162  43.160
1129          UC    .208    .335
1130          UA       0       5      16      30      65      77      84      90      94      97
1131          UA     100

1132          KK   D122C
1133          KM   FLOW FROM DIVERSION OUT OF 122C INTO 122A
1134          DR  DO122C

1135          KK  RD122C
1136          KM   ROUTE D122C THROUGH SUB-BASIN 122A TO CON. POINT LSR1B
1137          RS       4    FLOW       0
1138          RC    0.02    0.02    0.02    2050   0.019
1139          RX    9956    9961    9966  9966.5  10033.5   10034   10039   10044
1140          RY  1606.5  1606.5  1606.5    1606    1606  1606.5  1606.5  1606.5
```

```
LINE          ID.......1.......2.......3.......4.......5.......6.......7.......8.......9......10

1141          KK   LSR1B
1142          KM   LASER WASH CONCENTRATION POINT 1B - COMBINE 122A, RD122C
1143          HC      2

1144          KK  RLSR1B
1145          KM   ROUTE LSR1B THROUGH SUB-BASIN 122B TO CON. POINT LSR1
1146          RS      2    FLOW      0
1147          RC    .04     .04     .04    1052    .019
1148          RX   9840    9870    9890    9930   10045   10105   10130   10170
1149          RY   1582    1582    1582    1578    1577    1582    1582    1582

1150          KK    122B
1151          KM   SUB-BASIN 122B
1152          KM   6-HOUR RAINFALL, PATTERN NO. 1.00 WAS USED TO FIND TC & R FOR THIS BASIN
1153          KM   THIS BASIN USED RAINFALL REDUCTION FACTOR OF1.000
1154          BA    .034
1155          LG    .110    .250   6.000    .162  77.600
1156          UC    .175    .148
1157          UA       0       5      16      30      65      77      84      90      94      97
1158          UA     100

1159          KK    LSR1
1160          KM   LASER DRAIN CONCENTRATION POINT 1 - R122A AND 122B
1161          HC      2

1162          KK   RLSR1
1163          KM   ROUTE LSR1 THROUGH SUB-BASIN 122H TO CON. POINT LSR3
1164          RS      2    FLOW      0
1165          RC   0.02    0.02    0.02     500   0.018
1166          RX   9885    9905    9935    9960   10030   10050   10110   10130
1167          RY 1574.5    1574    1570  1568.5  1568.5    1572    1572    1574

1168          KK    122H
1169          KM   SUB-BASIN 122H
1170          KM   6-HOUR RAINFALL, PATTERN NO. 1.00 WAS USED TO FIND TC & R FOR THIS BASIN
1171          KM   THIS BASIN USED RAINFALL REDUCTION FACTOR OF1.000
1172          BA    .006
1173          LG    .150    .250   6.000    .181  73.320
1174          UC    .129    .163
1175          UA       0       5      16      30      65      77      84      90      94      97
1176          UA     100

1177          KK    122I
1178          KM   SUB-BASIN 122I
1179          KM   6-HOUR RAINFALL, PATTERN NO. 1.00 WAS USED TO FIND TC & R FOR THIS BASIN
1180          KM   THIS BASIN USED RAINFALL REDUCTION FACTOR OF1.000
1181          BA    .007
1182          LG    .150    .250   6.000    .175  75.000
1183          UC    .171    .233
1184          UA       0       5      16      30      65      77      84      90      94      97
1185          UA     100
```

```
LINE          ID.......1.......2.......3.......4.......5.......6.......7.......8.......9......10

1186          KK   LSR3
1187          KM   LASER DRAIN CONCENTRATION POINT 3 - RLSR1,RLSR2,122H,122I
1188          HC      4

1189          KK   RLSR3
1190          KM   ROUTE LSR3 THROUGH SUB-BASIN 122J TO CON. POINT LSR4
1191          RS      2    FLOW      0
1192          RC   0.04    0.04    0.04     422   0.017
1193          RX   9835    9875    9890    9910   10045   10055   10070   10080
1194          RY   1570    1568    1564    1562    1562    1564    1566    1568

1195          KK   122J
1196          KM   SUB-BASIN 122J
1197          KM   6-HOUR RAINFALL, PATTERN NO. 1.00 WAS USED TO FIND TC & R FOR THIS BASIN
1198          KM   THIS BASIN USED RAINFALL REDUCTION FACTOR OF1.000
1199          BA   .025
1200          LG   .150    .250   6.000    .183  38.780
1201          UC   .208    .240
1202          UA      0       5      16      30      65      77      84      90      94      97
1203          UA    100

1204          KK   LSR4
1205          KM   LASER DRAIN CONCENTRATION POINT 4 - RLSR3 AND 122J
1206          HC      2

1207          KK   RLS4
1208          KM   ROUTE LSR4 THROUGH SUB-BASIN 122K TO CONFLUENCE WITH CEREUS WASH CER11
1209          RS      2    FLOW      0
1210          RC   0.04    0.04    0.04     666    0.02
1211          RX   9790    9815    9895    9965   10030   10065   10150   10220
1212          RY   1562    1560    1558    1546    1546    1556    1558    1562

1213          KK   122K
1214          KM   SUB-BASIN 122K
1215          KM   6-HOUR RAINFALL, PATTERN NO. 1.00 WAS USED TO FIND TC & R FOR THIS BASIN
1216          KM   THIS BASIN USED RAINFALL REDUCTION FACTOR OF1.000
1217          BA   .003
1218          LG   .134    .210   6.400    .152  56.900
1219          UC   .175    .372
1220          UA      0       5      16      30      65      77      84      90      94      97
1221          UA    100

1222          KK   LSR5
1223          KM   LASER CONCENTRATION POINT 5 - RLSR5, 122K
1224          HC      2

1225          KK   CER11
1226          KM   CEREUS WASH CONCENTRATION POINT 11 - (RCER10, 120T), (RLSR5, 122K)
1227          KM   CONFLUENCE OF CEREUS WASH AND LASER DRAIN
1228          HC      2
```

```
LINE          ID.......1.......2.......3.......4.......5.......6.......7.......8.......9......10

1229          KK  RCER11
1230          KM   ROUTE CER11 THROUGH SUB-BASIN 120U TO CON. POINT CER12
1231          RS       2    FLOW       0
1232          RC     .04     .04     .04     821    .012
1233          RX    9885    9920    9965    9995   10020   10070   10120   10270
1234          RY    1570    1560    1548    1540    1540    1550    1554    1556

1235          KK    120U
1236          KM   SUB-BASIN 120U
1237          KM   6-HOUR RAINFALL, PATTERN NO. 1.00 WAS USED TO FIND TC & R FOR THIS BASIN
1238          KM   THIS BASIN USED RAINFALL REDUCTION FACTOR OF1.000
1239          BA    .019
1240          LG    .128    .170   6.800    .128  63.010
1241          UC    .154    .151
1242          UA       0       5      16      30      65      77      84      90      94      97
1243          UA     100

1244          KK  *CER12
1245          KM   CEREUS WASH CONCENTRATION POINT *12 - RCER11, 120U
1246          HC       2

1247          KK    121A
1248          KM   SUB-BASIN 121A
1249          KM   6-HOUR RAINFALL, PATTERN NO. 1.00 WAS USED TO FIND TC & R FOR THIS BASIN
1250          KM   THIS BASIN USED RAINFALL REDUCTION FACTOR OF .999
1251          BA    .050
1252          LG    .150    .250   6.000    .175  15.000
1253          UC    .258    .273
1254          UA       0       5      16      30      65      77      84      90      94      97
1255          UA     100

1256          KK   R121A
1257          KM   ROUTE 121A THROUGH SUB-BASIN 121B TO CON. POINT CER12
1258          RS       2    FLOW       0
1259          RC    0.04    0.04    0.04     446   0.036
1260          RX    9870    9905    9925    9990   10010   10052   10065   10100
1261          RY    1552    1550    1548    1542    1542    1550    1552    1554

1262          KK    121B
1263          KM   SUB-BASIN 121B
1264          KM   6-HOUR RAINFALL, PATTERN NO. 1.00 WAS USED TO FIND TC & R FOR THIS BASIN
1265          KM   THIS BASIN USED RAINFALL REDUCTION FACTOR OF1.000
1266          BA    .020
1267          LG    .150    .250   6.000    .175  15.910
1268          UC    .225    .341
1269          UA       0       5      16      30      65      77      84      90      94      97
1270          UA     100

1271          KK    LTD1
1272          KM   LAST TRAIL CONCENTRATION POINT 1 - R121A, 121B
1273          HC       2
```

```
LINE          ID.......1.......2.......3.......4.......5.......6.......7.......8.......9......10

1274          KK   CER12
1275          KM   CEREUS WASH CONCENTRATION POINT 12 - (RCER11, 120U), (R121A, 121B)
1276          KM   CONFLUENCE WITH LAST TRAIL DRAIN
1277          HC       2

1278          KK  RCER13
1279          KM   ROUTE CER12 THROUGH SUB-BASIN 120V TO CON. POINT CER13
1280          RS       1    FLOW       0
1281          RC    0.04    0.04    0.04     317   0.006
1282          RX    9820    9900    9950    9995   10030   10075   10120   10150
1283          RY    1550    1548    1540    1532    1532    1542    1552    1556

1284          KK    120V
1285          KM   SUB-BASIN 120V
1286          KM   6-HOUR RAINFALL, PATTERN NO. 1.00 WAS USED TO FIND TC & R FOR THIS BASIN
1287          KM   THIS BASIN USED RAINFALL REDUCTION FACTOR OF1.000
1288          BA    .010
1289          LG    .150    .190   6.600    .146  19.820
1290          UC    .158    .182
1291          UA       0       5      16      30      65      77      84      90      94      97
1292          UA     100

1293          KK   CER13
1294          KM   CEREUS WASH CONCENTRATION POINT 13 - RCER12, 120V UPSTREAM OF SHEA BLVD
1295          HC       2

1296          KK  SCER13
1297          KM   ROUTE CER13 THROGH 3 12'X12' BOX CULVERTS UNDER SHEA BLVD
1298          KO       3
1299          RS       1    ELEV 1530.30
1300          SQ       0    1332    3780    6300
1301          SE  1530.3  1536.3  1542.3  1549.1
1302          SA       0   0.011    0.95    3.40    6.46
1303          SE  1530.3    1532    1536    1544    1548

1304          KK  RCER13
1305          KM   ROUTE SCER13 THROUGHT SUB-BASIN 120X TO CON. POINT CER14
1306          RS       2    FLOW       0
1307          RC    0.04    0.04    0.04     868   0.013
1308          RX    9785    9850    9875    9910   10090   10135   10200   10280
1309          RY    1539    1538    1536    1525    1524    1536    1537    1538

1310          KK    120X
1311          KM   SUB-BASIN 120X
1312          KM   6-HOUR RAINFALL, PATTERN NO. 1.00 WAS USED TO FIND TC & R FOR THIS BASIN
1313          KM   THIS BASIN USED RAINFALL REDUCTION FACTOR OF1.000
1314          BA    .016
1315          LG    .117    .150   7.600    .092  73.460
1316          UC    .133    .115
1317          UA       0       5      16      30      65      77      84      90      94      97
1318          UA     100
```

```
LINE          ID.......1.......2.......3.......4.......5.......6.......7.......8.......9......10

1319          KK  *CER14
1320          KM   CEREUS WASH CONCENTRATION POINT *14 - RCER13, 120X
1321          HC       2

1322          KK    120W
1323          KM   SUB-BASIN 120W
1324          KM   6-HOUR RAINFALL, PATTERN NO. 1.00 WAS USED TO FIND TC & R FOR THIS BASIN
1325          KM   THIS BASIN USED RAINFALL REDUCTION FACTOR OF1.000
1326          BA    .005
1327          LG    .147    .250   6.000    .181  16.710
1328          UC    .087    .067
1329          UA       0       5      16      30      65      77      84      90      94      97
1330          UA     100

1331          KK   S120W
1332          KM   ROUTE 120W THROUGH 2 30" CMP CULVERT UNDER SHEA BLVD
1333          KO       3
1334          RS       1    ELEV 1540.94
1335          SQ       0      28      60     100
1336          SE  1540.9  1542.8  1544.6  1548.2
1337          SA       0    0.06    0.46
1338          SE    1539    1540    1543

1339          KK   R120W
1340          KM   ROUTE S120W THROUGH SUB-BASIN 120X TO CON. POINT CER14
1341          RS       2    FLOW       0
1342          RC    0.04    0.04    0.04     500   0.042
1343          RX    9970    9985    9995    9998   10002   10015   10050   10065
1344          RY    1532    1530    1528  1527.5  1527.5    1530    1536    1538

1345          KK   CER14
1346          KM   CEREUS WASH POINT OF CONCENTRATION 13 - (SCER13,120X), R120W
1347          HC       2
1348          ZZ
```

RUNOFF SUMMARY
FLOW IN CUBIC FEET PER SECOND
TIME IN HOURS, AREA IN SQUARE MILES

OPERATION	STATION	PEAK FLOW	TIME OF PEAK	AVERAGE FLOW FOR MAXIMUM PERIOD 6-HOUR	24-HOUR	72-HOUR	BASIN AREA	MAXIMUM STAGE	TIME OF MAX STAGE
HYDROGRAPH AT	120A	22.	4.07	3.	2.	2.	0.02		
HYDROGRAPH AT	120B	85.	4.07	9.	5.	5.	0.05		
HYDROGRAPH AT	160A	13.	4.00	1.	1.	1.	0.01		
ROUTED TO	R160A	12.	4.07	1.	1.	1.	0.01		
3 COMBINED AT	CER1	119.	4.07	12.	7.	7.	0.08		
ROUTED TO	SCER1	101.	4.17	12.	7.	7.	0.08		
HYDROGRAPH AT	120C	9.	4.03	1.	0.	0.	0.00		
2 COMBINED AT	CER2	108.	4.13	13.	8.	8.	0.08		
ROUTED TO	RCER2	106.	4.23	13.	8.	8.	0.08		
HYDROGRAPH AT	120D	112.	4.07	10.	6.	6.	0.07		
2 COMBINED AT	*CER3	192.	4.10	23.	14.	14.	0.15		
HYDROGRAPH AT	120H	6.	4.07	1.	0.	0.	0.00		
ROUTED TO	R120H	6.	4.07	1.	0.	0.	0.00		
HYDROGRAPH AT	120I	11.	4.03	1.	1.	1.	0.01		
2 COMBINED AT	CER3A	17.	4.03	2.	1.	1.	0.01		
ROUTED TO	SCER3A	10.	4.27	1.	1.	1.	0.01		
2 COMBINED AT	CER3	195.	4.13	24.	14.	14.	0.16		
ROUTED TO	SCER3	192.	4.17	24.	14.	14.	0.16		
ROUTED TO	RCER3	192.	4.20	24.	14.	14.	0.16		
HYDROGRAPH AT	120E	23.	4.07	3.	2.	2.	0.02		
2 COMBINED AT	*CER4	211.	4.17	26.	16.	16.	0.18		

HYDROGRAPH AT	126A	12.	4.03	1.	1.	1.	0.01
ROUTED TO	R126A	11.	4.13	1.	1.	1.	0.01
HYDROGRAPH AT	126B	30.	4.07	4.	2.	2.	0.02
2 COMBINED AT	WW1	40.	4.10	5.	3.	3.	0.03
ROUTED TO	RWW1	39.	4.13	5.	3.	3.	0.03
HYDROGRAPH AT	126C	146.	4.13	17.	10.	10.	0.14
ROUTED TO	R126C	141.	4.20	17.	10.	10.	0.14
HYDROGRAPH AT	126D	45.	4.07	4.	2.	2.	0.03
3 COMBINED AT	WW3	209.	4.17	25.	15.	15.	0.20
ROUTED TO	RWW3	207.	4.20	25.	15.	15.	0.20
HYDROGRAPH AT	126E	144.	4.13	12.	7.	7.	0.09
HYDROGRAPH AT	126F	96.	4.10	8.	5.	5.	0.05
2 COMBINED AT	WW4	238.	4.13	20.	12.	12.	0.15
ROUTED TO	RWW4	228.	4.23	20.	12.	12.	0.15
HYDROGRAPH AT	126G	185.	4.10	20.	12.	12.	0.14
HYDROGRAPH AT	126H	33.	4.03	3.	2.	2.	0.02
4 COMBINED AT	WW5	617.	4.17	68.	41.	41.	0.50
ROUTED TO	RWW5	611.	4.23	68.	41.	41.	0.50
HYDROGRAPH AT	126I	150.	4.07	14.	8.	8.	0.08
HYDROGRAPH AT	126J	3.	4.03	0.	0.	0.	0.00
ROUTED TO	R126J	3.	4.07	0.	0.	0.	0.00
3 COMBINED AT	WW6	675.	4.20	81.	49.	49.	0.58
ROUTED TO	RWW6	668.	4.27	81.	49.	49.	0.58
HYDROGRAPH AT	126M	38.	4.07	4.	2.	2.	0.03

2 COMBINED AT	*WW7	683.	4.27	85.	51.	51.	0.61
HYDROGRAPH AT	126K	18.	4.03	2.	1.	1.	0.01
ROUTED TO	R126K	18.	4.10	2.	1.	1.	0.01
HYDROGRAPH AT	126L	34.	4.07	4.	2.	2.	0.02
3 COMBINED AT	WW7	708.	4.27	90.	54.	54.	0.64
ROUTED TO	SWW7	708.	4.27	90.	54.	54.	0.64
HYDROGRAPH AT	127A	41.	4.07	4.	2.	2.	0.03
HYDROGRAPH AT	127B	67.	4.03	5.	3.	3.	0.04
2 COMBINED AT	CAP1	108.	4.07	9.	5.	5.	0.07
ROUTED TO	RCAP1	105.	4.10	9.	5.	5.	0.07
HYDROGRAPH AT	127C	74.	4.07	7.	4.	4.	0.04
HYDROGRAPH AT	127D	38.	4.03	3.	2.	2.	0.02
3 COMBINED AT	CAP2	210.	4.07	18.	11.	11.	0.13
ROUTED TO	RCAP2	208.	4.10	18.	11.	11.	0.13
HYDROGRAPH AT	127E	163.	4.07	16.	10.	10.	0.10
HYDROGRAPH AT	127F	230.	4.10	25.	15.	15.	0.15
2 COMBINED AT	CAP3	391.	4.10	41.	25.	25.	0.25
ROUTED TO	RCAP3	387.	4.10	41.	25.	25.	0.25
HYDROGRAPH AT	127G	109.	4.03	10.	6.	6.	0.06
2 COMBINED AT	CAP4	488.	4.10	51.	31.	31.	0.31
ROUTED TO	SCAP4	487.	4.10	51.	31.	31.	0.31
ROUTED TO	R2CAP4	482.	4.13	51.	31.	31.	0.31
HYDROGRAPH AT	127I	14.	4.07	1.	1.	1.	0.01
2 COMBINED AT	*CAP5	494.	4.13	52.	31.	31.	0.32

HYDROGRAPH AT	127H	33.	4.03	3.	2.	2.	0.02
3 COMBINED AT	CAP5	727.	4.10	74.	44.	44.	0.47
ROUTED TO	RCAP5	716.	4.13	73.	44.	44.	0.47
HYDROGRAPH AT	127J	54.	4.07	5.	3.	3.	0.03
2 COMBINED AT	CAP6	763.	4.13	79.	48.	48.	0.50
2 COMBINED AT	WW8	1185.	4.20	162.	98.	98.	1.14
ROUTED TO	RWW8	1171.	4.30	162.	98.	98.	1.14
HYDROGRAPH AT	126N	106.	4.10	11.	7.	7.	0.08
2 COMBINED AT	WW9	1213.	4.30	172.	104.	104.	1.22
2 COMBINED AT	CER4	1328.	4.27	195.	118.	118.	1.40
ROUTED TO	RCER4	1323.	4.30	195.	118.	118.	1.40
HYDROGRAPH AT	120F	39.	4.03	3.	2.	2.	0.02
2 COMBINED AT	*CER5	1332.	4.30	198.	119.	119.	1.42
HYDROGRAPH AT	125A	110.	4.10	13.	8.	8.	0.08
HYDROGRAPH AT	125B	173.	4.10	20.	12.	12.	0.11
2 COMBINED AT	CHK1	284.	4.10	33.	20.	20.	0.19
ROUTED TO	RCHK1	277.	4.13	33.	20.	20.	0.19
HYDROGRAPH AT	125C	53.	4.07	5.	3.	3.	0.03
ROUTED TO	R125C	41.	4.17	5.	3.	3.	0.03
HYDROGRAPH AT	125D	18.	4.20	3.	2.	2.	0.02
3 COMBINED AT	CHK2	335.	4.13	41.	25.	25.	0.24
ROUTED TO	R2CHK2	329.	4.20	41.	25.	25.	0.24
HYDROGRAPH AT	125E	84.	4.03	8.	5.	5.	0.05
2 COMBINED AT	CHK3	384.	4.17	49.	30.	30.	0.28

2 COMBINED AT	CER5	1539.	4.30	242.	146.	146.	1.71
ROUTED TO	RCER5	1533.	4.33	242.	146.	146.	1.71
HYDROGRAPH AT	120G	65.	4.07	6.	4.	4.	0.04
2 COMBINED AT	*CER6	1551.	4.33	247.	150.	150.	1.74
HYDROGRAPH AT	124A	109.	4.07	12.	7.	7.	0.07
HYDROGRAPH AT	124B	87.	4.03	7.	4.	4.	0.04
2 COMBINED AT	LOG1	193.	4.07	19.	12.	12.	0.11
ROUTED TO	RLOG1	188.	4.10	19.	12.	12.	0.11
HYDROGRAPH AT	124D	10.	4.10	2.	1.	1.	0.01
2 COMBINED AT	*LOG2	198.	4.10	21.	13.	13.	0.12
HYDROGRAPH AT	124C	29.	4.07	3.	2.	2.	0.02
2 COMBINED AT	LOG2	227.	4.07	24.	15.	15.	0.14
ROUTED TO	RLOG2	218.	4.17	24.	15.	15.	0.14
HYDROGRAPH AT	124E	89.	4.07	9.	5.	5.	0.05
2 COMBINED AT	LOG3	291.	4.13	33.	20.	20.	0.19
2 COMBINED AT	CER6	1675.	4.33	277.	167.	167.	1.94
ROUTED TO	RCER6	1669.	4.37	277.	167.	167.	1.94
HYDROGRAPH AT	120L	66.	4.07	7.	4.	4.	0.04
2 COMBINED AT	*CER7	1688.	4.37	283.	171.	171.	1.97
HYDROGRAPH AT	120J	6.	4.10	1.	1.	1.	0.01
ROUTED TO	R120J	6.	4.10	1.	1.	1.	0.01
HYDROGRAPH AT	120K	47.	4.07	5.	3.	3.	0.03
2 COMBINED AT	CER7A	52.	4.07	6.	3.	3.	0.04
ROUTED TO	SCER7A	52.	4.10	6.	3.	3.	0.04

ROUTED TO	RCER7A	49.	4.20	6.	3.	3.	0.04
HYDROGRAPH AT	120M	50.	4.10	7.	4.	4.	0.04
HYDROGRAPH AT	123B	32.	4.03	3.	2.	2.	0.02
ROUTED TO	S123B	32.	4.03	3.	2.	2.	0.02
ROUTED TO	R123B	32.	4.07	3.	2.	2.	0.02
ROUTED TO	R123B	32.	4.07	3.	2.	2.	0.02
4 COMBINED AT	CER7	1734.	4.37	296.	179.	179.	2.07
ROUTED TO	RCER7	1723.	4.43	296.	179.	179.	2.07
HYDROGRAPH AT	120N	84.	4.03	9.	5.	5.	0.04
2 COMBINED AT	*CER8	1740.	4.43	304.	184.	184.	2.12
HYDROGRAPH AT	123A	115.	4.07	10.	6.	6.	0.08
ROUTED TO	S123A	108.	4.10	10.	6.	6.	0.08
HYDROGRAPH AT	123D	10.	4.10	1.	1.	1.	0.01
2 COMBINED AT	TRV1	118.	4.10	12.	7.	7.	0.09
ROUTED TO	STRV1	118.	4.13	12.	7.	7.	0.09
ROUTED TO	RTRV1	113.	4.20	12.	7.	7.	0.09
HYDROGRAPH AT	123C	6.	4.00	0.	0.	0.	0.00
ROUTED TO	S123C	6.	4.00	0.	0.	0.	0.00
ROUTED TO	R123C	6.	4.00	0.	0.	0.	0.00
ROUTED TO	R123C	6.	4.13	0.	0.	0.	0.00
3 COMBINED AT	CER8	1781.	4.40	314.	190.	190.	2.20
ROUTED TO	RCER8	1777.	4.47	314.	190.	190.	2.20
HYDROGRAPH AT	120O	16.	4.00	1.	1.	1.	0.01
ROUTED TO	S120O	16.	4.03	1.	1.	1.	0.01

ROUTED TO	R120O	16.	4.03	1.	1.	1.	0.01
ROUTED TO	R120O	13.	4.17	1.	1.	1.	0.01
HYDROGRAPH AT	120Q	62.	4.07	7.	4.	4.	0.04
3 COMBINED AT	*CER9	1794.	4.47	321.	195.	195.	2.25
HYDROGRAPH AT	120P	63.	4.00	4.	2.	2.	0.03
ROUTED TO	S120P	63.	4.00	4.	2.	2.	0.03
ROUTED TO	R120P	61.	4.03	4.	2.	2.	0.03
2 COMBINED AT	CER9	1795.	4.43	324.	197.	197.	2.28
ROUTED TO	SCER9	563.	5.17	323.	197.	197.	2.28
HYDROGRAPH AT	120R	18.	4.07	2.	1.	1.	0.01
HYDROGRAPH AT	120S	12.	4.03	1.	1.	1.	0.01
3 COMBINED AT	CER10	580.	4.27	326.	199.	199.	2.29
ROUTED TO	RCER10	579.	4.30	326.	199.	199.	2.29
HYDROGRAPH AT	120T	4.	4.03	0.	0.	0.	0.00
2 COMBINED AT	*CER11	581.	4.30	327.	199.	199.	2.30
HYDROGRAPH AT	122C	26.	4.03	2.	1.	1.	0.01
DIVERSION TO	DO122C	13.	4.03	1.	1.	1.	0.01
HYDROGRAPH AT	D122C	13.	4.03	1.	1.	1.	0.01
ROUTED TO	R122C	12.	4.07	1.	1.	1.	0.01
HYDROGRAPH AT	122E	59.	4.03	6.	4.	4.	0.03
2 COMBINED AT	LSR2B	71.	4.07	7.	4.	4.	0.05
ROUTED TO	RLSR2B	70.	4.10	7.	4.	4.	0.05
HYDROGRAPH AT	122D	54.	4.07	5.	3.	3.	0.03
ROUTED TO	R122D	54.	4.07	5.	3.	3.	0.03

HYDROGRAPH AT	122F	15.	4.07	2.	1.	1.	0.01
ROUTED TO	R122F	15.	4.10	2.	1.	1.	0.01
HYDROGRAPH AT	122G	48.	4.03	5.	3.	3.	0.02
4 COMBINED AT	LSR2	179.	4.07	18.	11.	11.	0.11
ROUTED TO	RLSR2	178.	4.07	18.	11.	11.	0.11
HYDROGRAPH AT	122A	27.	4.07	3.	2.	2.	0.02
HYDROGRAPH AT	D122C	13.	4.03	1.	1.	1.	0.01
ROUTED TO	RD122C	11.	4.20	1.	1.	1.	0.01
2 COMBINED AT	LSR1B	35.	4.13	5.	3.	3.	0.02
ROUTED TO	RLSR1B	32.	4.27	5.	3.	3.	0.02
HYDROGRAPH AT	122B	69.	4.03	7.	4.	4.	0.03
2 COMBINED AT	LSR1	89.	4.07	12.	7.	7.	0.05
ROUTED TO	RLSR1	88.	4.10	12.	7.	7.	0.05
HYDROGRAPH AT	122H	12.	4.03	1.	1.	1.	0.01
HYDROGRAPH AT	122I	12.	4.03	1.	1.	1.	0.01
4 COMBINED AT	LSR3	288.	4.07	33.	20.	20.	0.18
ROUTED TO	RLSR3	287.	4.10	33.	20.	20.	0.18
HYDROGRAPH AT	122J	38.	4.07	4.	2.	2.	0.03
2 COMBINED AT	LSR4	324.	4.10	37.	22.	22.	0.20
ROUTED TO	RLS4	321.	4.10	37.	22.	22.	0.20
HYDROGRAPH AT	122K	4.	4.07	1.	0.	0.	0.00
2 COMBINED AT	LSR5	325.	4.10	37.	22.	22.	0.21
2 COMBINED AT	CER11	762.	4.27	360.	219.	219.	2.50
ROUTED TO	RCER11	760.	4.30	360.	219.	219.	2.50

HYDROGRAPH AT	120U	39.	4.03	4.	2.	2.	0.02
2 COMBINED AT	*CER12	775.	4.30	363.	221.	221.	2.52
HYDROGRAPH AT	121A	66.	4.10	6.	4.	4.	0.05
ROUTED TO	R121A	65.	4.10	6.	4.	4.	0.05
HYDROGRAPH AT	121B	24.	4.10	3.	2.	2.	0.02
2 COMBINED AT	LTD1	88.	4.10	9.	5.	5.	0.07
2 COMBINED AT	CER12	820.	4.30	370.	226.	226.	2.59
ROUTED TO	RCER13	819.	4.33	370.	226.	226.	2.59
HYDROGRAPH AT	120V	17.	4.03	1.	1.	1.	0.01
2 COMBINED AT	CER13	825.	4.33	371.	226.	226.	2.60
ROUTED TO	SCER13	822.	4.33	371.	226.	226.	2.60
ROUTED TO	RCER13	817.	4.40	371.	226.	226.	2.60
HYDROGRAPH AT	120X	36.	4.03	3.	2.	2.	0.02
2 COMBINED AT	*CER14	825.	4.40	374.	228.	228.	2.62
HYDROGRAPH AT	120W	11.	4.00	1.	0.	0.	0.00
ROUTED TO	S120W	7.	4.07	1.	0.	0.	0.00
ROUTED TO	R120W	7.	4.10	1.	0.	0.	0.00
2 COMBINED AT	CER14	828.	4.40	375.	229.	229.	2.62

*** NORMAL END OF HEC-1 ***

APPENDIX D.2

HEC-1 OUTPUT FOR 25-YEAR, 6-HOUR STORM

```
*****************************************
*                                       *
*   FLOOD HYDROGRAPH PACKAGE  (HEC-1)   *
*             MAY   1991                *
*          VERSION 4.0.1E               *
*                                       *
* RUN DATE  11/17/94  TIME  10:12:52    *
*                                       *
*****************************************
```

```
****************************************
*                                      *
*    U.S. ARMY CORPS OF ENGINEERS      *
*    HYDROLOGIC ENGINEERING CENTER     *
*          609 SECOND STREET           *
*       DAVIS, CALIFORNIA 95616        *
*           (916) 551-1748             *
*                                      *
****************************************
```

```
X     X  XXXXXXX   XXXXX          X
X     X  X        X     X        XX
X     X  X        X               X
XXXXXXX  XXXX     X        XXXXX  X
X     X  X        X               X
X     X  X        X     X         X
X     X  XXXXXXX   XXXXX         XXX
```

THIS PROGRAM REPLACES ALL PREVIOUS VERSIONS OF HEC-1 KNOWN AS HEC1 (JAN 73), HEC1GS, HEC1DB, AND HEC1KW.

THE DEFINITIONS OF VARIABLES -RTIMP- AND -RTIOR- HAVE CHANGED FROM THOSE USED WITH THE 1973-STYLE INPUT STRUCTURE.
THE DEFINITION OF -AMSKK- ON RM-CARD WAS CHANGED WITH REVISIONS DATED 28 SEP 81. THIS IS THE FORTRAN77 VERSION
NEW OPTIONS: DAMBREAK OUTFLOW SUBMERGENCE , SINGLE EVENT DAMAGE CALCULATION, DSS:WRITE STAGE FREQUENCY,
DSS:READ TIME SERIES AT DESIRED CALCULATION INTERVAL LOSS RATE:GREEN AND AMPT INFILTRATION
KINEMATIC WAVE: NEW FINITE DIFFERENCE ALGORITHM

```
LINE          ID.......1.......2.......3.......4.......5.......6.......7.......8.......9......10

  1           ID   Fountain Hills efluent lake study
  2           ID   Prepared for Anderson-Nelson, Inc.
  3           ID
  4           ID   Cereus Wash
  5           ID   25-yr 6-Hr Storm
  6           ID   Developed conditions without lakes.
  7           ID   2 minute time interval
  8           ID
  9           ID   AGK Engineers, Inc. (HAA) Nov 17, 1994
 10           ID
 11           IT      2                    300
 12           IO      5
 13           IN     15
 14           JD   2.70    0.01
 15           PC   .000    .008    .016    .025    .033    .041    .050    .058    .066    .074
 16           PC   .087    .099    .118    .138    .216    .377    .834    .911    .931    .950
 17           PC   .962    .972    .983    .991   1.000
 18           JD   2.68    0.50
 19           JD   2.65    2.80
 20           PC   .000    .009    .016    .025    .034    .042    .051    .059    .067    .076
 21           PC   .087    .100    .120    .163    .252    .451    .694    .837    .900    .938
 22           PC   .950    .963    .975    .988   1.000
 23           JD   2.49    16.0
 24           PC   .000    .015    .020    .030    .048    .063    .076    .090    .105    .119
 25           PC   .135    .152    .175    .222    .304    .472    .670    .796    .868    .912
 26           PC   .946    .960    .973    .987   1.000

 27           KK   120A
 28           KM   SUB-BASIN 120A
 29           KM   6-HOUR RAINFALL, PATTERN NO. 1.00 WAS USED TO FIND TC & R FOR THIS BASIN
 30           KM   THIS BASIN USED RAINFALL REDUCTION FACTOR OF1.000
 31           BA   .016
 32           LG   .100    .250   5.700    .170  45.000
 33           UC   .183    .336
 34           UA      0       5      16      30      65      77      84      90      94      97
 35           UA    100

 36           KK   120B
 37           KM   SUB-BASIN 120B
 38           KM   6-HOUR RAINFALL, PATTERN NO. 1.00 WAS USED TO FIND TC & R FOR THIS BASIN
 39           KM   THIS BASIN USED RAINFALL REDUCTION FACTOR OF .999
 40           BA   .053
 41           LG   .150    .250   5.700    .207  45.000
 42           UC   .233    .215
 43           UA      0       5      16      30      65      77      84      90      94      97
 44           UA    100

 45           KK   160A
 46           KM   SUB-BASIN 160A
 47           KM   6-HOUR RAINFALL, PATTERN NO. 1.00 WAS USED TO FIND TC & R FOR THIS BASIN
 48           KM   THIS BASIN USED RAINFALL REDUCTION FACTOR OF1.000
 49           BA   .006
 50           LG   .100    .250   5.700    .170  45.000
 51           UC   .096    .099
 52           UA      0       5      16      30      65      77      84      90      94      97
```

RUNOFF SUMMARY
FLOW IN CUBIC FEET PER SECOND
TIME IN HOURS, AREA IN SQUARE MILES

OPERATION	STATION	PEAK FLOW	TIME OF PEAK	AVERAGE FLOW FOR MAXIMUM PERIOD 6-HOUR	24-HOUR	72-HOUR	BASIN AREA	MAXIMUM STAGE	TIME OF MAX STAGE
HYDROGRAPH AT	120A	27.	4.07	3.	2.	2.	0.02		
HYDROGRAPH AT	120B	108.	4.07	11.	7.	7.	0.05		
HYDROGRAPH AT	160A	16.	4.00	1.	1.	1.	0.01		
ROUTED TO	R160A	16.	4.07	1.	1.	1.	0.01		
3 COMBINED AT	CER1	150.	4.07	16.	10.	10.	0.08		
ROUTED TO	SCER1	122.	4.17	16.	10.	10.	0.08		
HYDROGRAPH AT	120C	12.	4.03	1.	1.	1.	0.00		
2 COMBINED AT	CER2	129.	4.13	17.	10.	10.	0.08		
ROUTED TO	RCER2	128.	4.23	17.	10.	10.	0.08		
HYDROGRAPH AT	120D	143.	4.07	13.	8.	8.	0.07		
2 COMBINED AT	*CER3	246.	4.10	29.	18.	18.	0.15		
HYDROGRAPH AT	120H	8.	4.07	1.	1.	1.	0.00		
ROUTED TO	R120H	8.	4.07	1.	1.	1.	0.00		
HYDROGRAPH AT	120I	15.	4.03	1.	1.	1.	0.01		
2 COMBINED AT	CER3A	22.	4.03	2.	1.	1.	0.01		
ROUTED TO	SCER3A	15.	4.20	1.	1.	1.	0.01		
2 COMBINED AT	CER3	257.	4.10	31.	19.	19.	0.16		
ROUTED TO	SCER3	252.	4.17	31.	19.	19.	0.16		
ROUTED TO	RCER3	251.	4.17	31.	19.	19.	0.16		
HYDROGRAPH AT	120E	29.	4.07	3.	2.	2.	0.02		
2 COMBINED AT	*CER4	276.	4.17	34.	21.	21.	0.18		

HYDROGRAPH AT	126A	16.	4.03	2.	1.	1.	0.01
ROUTED TO	R126A	15.	4.13	2.	1.	1.	0.01
HYDROGRAPH AT	126B	38.	4.07	5.	3.	3.	0.02
2 COMBINED AT	WW1	52.	4.07	6.	4.	4.	0.03
ROUTED TO	RWW1	50.	4.13	6.	4.	4.	0.03
HYDROGRAPH AT	126C	194.	4.13	23.	14.	14.	0.14
ROUTED TO	R126C	188.	4.20	23.	14.	14.	0.14
HYDROGRAPH AT	126D	58.	4.07	5.	3.	3.	0.03
3 COMBINED AT	WW3	276.	4.17	34.	20.	20.	0.20
ROUTED TO	RWW3	276.	4.17	34.	20.	20.	0.20
HYDROGRAPH AT	126E	185.	4.13	16.	10.	10.	0.09
HYDROGRAPH AT	126F	123.	4.10	11.	7.	7.	0.05
2 COMBINED AT	WW4	305.	4.13	27.	16.	16.	0.15
ROUTED TO	RWW4	293.	4.20	27.	16.	16.	0.15
HYDROGRAPH AT	126G	237.	4.10	26.	16.	16.	0.14
HYDROGRAPH AT	126H	42.	4.03	4.	2.	2.	0.02
4 COMBINED AT	WW5	807.	4.17	90.	55.	55.	0.50
ROUTED TO	RWW5	796.	4.23	90.	55.	55.	0.50
HYDROGRAPH AT	126I	188.	4.07	17.	11.	11.	0.08
HYDROGRAPH AT	126J	4.	4.03	0.	0.	0.	0.00
ROUTED TO	R126J	4.	4.07	0.	0.	0.	0.00
3 COMBINED AT	WW6	883.	4.20	107.	65.	65.	0.58
ROUTED TO	RWW6	880.	4.23	107.	65.	65.	0.58
HYDROGRAPH AT	126M	48.	4.07	5.	3.	3.	0.03

2 COMBINED AT	*WW7	903.	4.23	112.	67.	67.	0.61
HYDROGRAPH AT	126K	23.	4.03	3.	2.	2.	0.01
ROUTED TO	R126K	23.	4.10	3.	2.	2.	0.01
HYDROGRAPH AT	126L	43.	4.07	5.	3.	3.	0.02
3 COMBINED AT	WW7	938.	4.23	119.	72.	72.	0.64
ROUTED TO	SWW7	922.	4.27	119.	72.	72.	0.64
HYDROGRAPH AT	127A	54.	4.07	5.	3.	3.	0.03
HYDROGRAPH AT	127B	86.	4.03	7.	4.	4.	0.04
2 COMBINED AT	CAP1	139.	4.07	11.	7.	7.	0.07
ROUTED TO	RCAP1	136.	4.10	11.	7.	7.	0.07
HYDROGRAPH AT	127C	93.	4.07	9.	5.	5.	0.04
HYDROGRAPH AT	127D	49.	4.03	4.	2.	2.	0.02
3 COMBINED AT	CAP2	277.	4.07	24.	15.	15.	0.13
ROUTED TO	RCAP2	273.	4.10	24.	15.	15.	0.13
HYDROGRAPH AT	127E	207.	4.07	21.	12.	12.	0.10
HYDROGRAPH AT	127F	290.	4.10	32.	19.	19.	0.15
2 COMBINED AT	CAP3	494.	4.10	52.	32.	32.	0.25
ROUTED TO	RCAP3	489.	4.10	52.	32.	32.	0.25
HYDROGRAPH AT	127G	136.	4.03	13.	8.	8.	0.06
2 COMBINED AT	CAP4	615.	4.10	65.	39.	39.	0.31
ROUTED TO	SCAP4	615.	4.10	65.	39.	39.	0.31
ROUTED TO	R2CAP4	608.	4.13	65.	39.	39.	0.31
HYDROGRAPH AT	127I	17.	4.07	2.	1.	1.	0.01
2 COMBINED AT	*CAP5	623.	4.13	67.	40.	40.	0.32

HYDROGRAPH AT	127H	41.	4.03	4.	2.	2.	0.02
3 COMBINED AT	CAP5	927.	4.10	95.	57.	57.	0.47
ROUTED TO	RCAP5	916.	4.13	95.	57.	57.	0.47
HYDROGRAPH AT	127J	68.	4.07	7.	4.	4.	0.03
2 COMBINED AT	CAP6	975.	4.13	102.	61.	61.	0.50
2 COMBINED AT	WW8	1543.	4.20	214.	129.	129.	1.14
ROUTED TO	RWW8	1530.	4.27	213.	129.	129.	1.14
HYDROGRAPH AT	126N	135.	4.10	15.	9.	9.	0.08
2 COMBINED AT	WW9	1592.	4.27	227.	137.	137.	1.22
2 COMBINED AT	CER4	1754.	4.27	258.	156.	156.	1.40
ROUTED TO	RCER4	1748.	4.30	258.	156.	156.	1.40
HYDROGRAPH AT	120F	49.	4.03	4.	3.	3.	0.02
2 COMBINED AT	*CER5	1761.	4.30	262.	158.	158.	1.42
HYDROGRAPH AT	125A	139.	4.10	17.	10.	10.	0.08
HYDROGRAPH AT	125B	217.	4.10	25.	15.	15.	0.11
2 COMBINED AT	CHK1	355.	4.10	42.	25.	25.	0.19
ROUTED TO	RCHK1	348.	4.13	42.	25.	25.	0.19
HYDROGRAPH AT	125C	66.	4.07	7.	4.	4.	0.03
ROUTED TO	R125C	53.	4.17	7.	4.	4.	0.03
HYDROGRAPH AT	125D	23.	4.20	4.	2.	2.	0.02
3 COMBINED AT	CHK2	422.	4.13	52.	32.	32.	0.24
ROUTED TO	R2CHK2	415.	4.20	52.	32.	32.	0.24
HYDROGRAPH AT	125E	106.	4.03	10.	6.	6.	0.05
2 COMBINED AT	CHK3	485.	4.17	62.	38.	38.	0.28

2 COMBINED AT						
	CER5	2037.	4.27	319.	193.	193.	1.71
ROUTED TO						
	RCER5	2026.	4.30	319.	193.	193.	1.71
HYDROGRAPH AT						
	120G	81.	4.07	8.	5.	5.	0.04
2 COMBINED AT						
	*CER6	2053.	4.30	327.	198.	198.	1.74
HYDROGRAPH AT						
	124A	138.	4.07	15.	9.	9.	0.07
HYDROGRAPH AT						
	124B	109.	4.03	9.	6.	6.	0.04
2 COMBINED AT						
	LOG1	242.	4.07	25.	15.	15.	0.11
ROUTED TO						
	RLOG1	238.	4.07	25.	15.	15.	0.11
HYDROGRAPH AT						
	124D	13.	4.10	2.	1.	1.	0.01
2 COMBINED AT						
	*LOG2	251.	4.07	27.	16.	16.	0.12
HYDROGRAPH AT						
	124C	37.	4.07	4.	3.	3.	0.02
2 COMBINED AT						
	LOG2	288.	4.07	31.	19.	19.	0.14
ROUTED TO						
	RLOG2	275.	4.17	31.	19.	19.	0.14
HYDROGRAPH AT						
	124E	112.	4.07	11.	7.	7.	0.05
2 COMBINED AT						
	LOG3	368.	4.13	42.	25.	25.	0.19
2 COMBINED AT						
	CER6	2224.	4.30	365.	221.	221.	1.94
ROUTED TO						
	RCER6	2215.	4.33	365.	221.	221.	1.94
HYDROGRAPH AT						
	120L	81.	4.07	9.	5.	5.	0.04
2 COMBINED AT						
	*CER7	2242.	4.33	374.	226.	226.	1.97
HYDROGRAPH AT						
	120J	7.	4.10	1.	1.	1.	0.01
ROUTED TO						
	R120J	7.	4.10	1.	1.	1.	0.01
HYDROGRAPH AT						
	120K	60.	4.07	6.	4.	4.	0.03
2 COMBINED AT						
	CER7A	67.	4.07	7.	4.	4.	0.04
ROUTED TO						
	SCER7A	67.	4.10	7.	4.	4.	0.04

ROUTED TO	RCER7A	63.	4.20	7.	4.	4.	0.04
HYDROGRAPH AT	120M	64.	4.10	8.	5.	5.	0.04
HYDROGRAPH AT	123B	41.	4.03	3.	2.	2.	0.02
ROUTED TO	S123B	41.	4.07	3.	2.	2.	0.02
ROUTED TO	R123B	41.	4.07	3.	2.	2.	0.02
ROUTED TO	R123B	41.	4.07	3.	2.	2.	0.02
4 COMBINED AT	CER7	2310.	4.33	391.	236.	236.	2.07
ROUTED TO	RCER7	2295.	4.40	390.	236.	236.	2.07
HYDROGRAPH AT	120N	103.	4.03	11.	7.	7.	0.04
2 COMBINED AT	*CER8	2320.	4.40	401.	243.	243.	2.12
HYDROGRAPH AT	123A	148.	4.07	14.	8.	8.	0.08
ROUTED TO	S123A	141.	4.10	14.	8.	8.	0.08
HYDROGRAPH AT	123D	13.	4.10	2.	1.	1.	0.01
2 COMBINED AT	TRV1	154.	4.10	16.	9.	9.	0.09
ROUTED TO	STRV1	154.	4.13	16.	9.	9.	0.09
ROUTED TO	RTRV1	146.	4.20	16.	9.	9.	0.09
HYDROGRAPH AT	123C	8.	4.00	1.	0.	0.	0.00
ROUTED TO	S123C	8.	4.00	1.	0.	0.	0.00
ROUTED TO	R123C	8.	4.00	1.	0.	0.	0.00
ROUTED TO	R123C	7.	4.13	1.	0.	0.	0.00
3 COMBINED AT	CER8	2379.	4.37	415.	251.	251.	2.20
ROUTED TO	RCER8	2375.	4.40	415.	251.	251.	2.20
HYDROGRAPH AT	120O	21.	4.00	2.	1.	1.	0.01
ROUTED TO	S120O	21.	4.03	2.	1.	1.	0.01

ROUTED TO	R120O	20.	4.03	2.	1.	1.	0.01
ROUTED TO	R120O	17.	4.17	2.	1.	1.	0.01
HYDROGRAPH AT	120Q	77.	4.07	9.	5.	5.	0.04
3 COMBINED AT	*CER9	2402.	4.40	424.	257.	257.	2.25
HYDROGRAPH AT	120P	80.	4.00	5.	3.	3.	0.03
ROUTED TO	S120P	79.	4.00	5.	3.	3.	0.03
ROUTED TO	R120P	78.	4.03	5.	3.	3.	0.03
2 COMBINED AT	CER9	2409.	4.40	428.	260.	260.	2.28
ROUTED TO	SCER9	563.	5.13	420.	260.	260.	2.28
HYDROGRAPH AT	120R	23.	4.07	3.	2.	2.	0.01
HYDROGRAPH AT	120S	15.	4.03	2.	1.	1.	0.01
3 COMBINED AT	CER10	586.	4.17	424.	262.	262.	2.29
ROUTED TO	RCER10	586.	4.20	424.	262.	262.	2.29
HYDROGRAPH AT	120T	5.	4.03	1.	0.	0.	0.00
2 COMBINED AT	*CER11	588.	4.20	425.	263.	263.	2.30
HYDROGRAPH AT	122C	33.	4.03	3.	2.	2.	0.01
DIVERSION TO	DO122C	16.	4.03	2.	1.	1.	0.01
HYDROGRAPH AT	D122C	16.	4.03	1.	1.	1.	0.01
ROUTED TO	R122C	16.	4.07	1.	1.	1.	0.01
HYDROGRAPH AT	122E	74.	4.03	7.	4.	4.	0.03
2 COMBINED AT	LSR2B	90.	4.07	9.	5.	5.	0.05
ROUTED TO	RLSR2B	87.	4.10	9.	5.	5.	0.05
HYDROGRAPH AT	122D	68.	4.07	6.	4.	4.	0.03
ROUTED TO	R122D	68.	4.07	6.	4.	4.	0.03

HYDROGRAPH AT	122F	19.	4.07	3.	2.	2.	0.01
ROUTED TO	R122F	19.	4.10	3.	2.	2.	0.01
HYDROGRAPH AT	122G	59.	4.03	6.	3.	3.	0.02
4 COMBINED AT	LSR2	226.	4.07	23.	14.	14.	0.11
ROUTED TO	RLSR2	224.	4.07	23.	14.	14.	0.11
HYDROGRAPH AT	122A	34.	4.07	4.	3.	3.	0.02
HYDROGRAPH AT	D122C	16.	4.03	2.	1.	1.	0.01
ROUTED TO	RD122C	14.	4.20	2.	1.	1.	0.01
2 COMBINED AT	LSR1B	45.	4.10	6.	4.	4.	0.02
ROUTED TO	RLSR1B	43.	4.23	6.	4.	4.	0.02
HYDROGRAPH AT	122B	86.	4.03	9.	5.	5.	0.03
2 COMBINED AT	LSR1	112.	4.07	15.	9.	9.	0.05
ROUTED TO	RLSR1	111.	4.07	15.	9.	9.	0.05
HYDROGRAPH AT	122H	15.	4.03	2.	1.	1.	0.01
HYDROGRAPH AT	122I	15.	4.03	2.	1.	1.	0.01
4 COMBINED AT	LSR3	363.	4.07	41.	25.	25.	0.18
ROUTED TO	RLSR3	361.	4.10	41.	25.	25.	0.18
HYDROGRAPH AT	122J	49.	4.07	5.	3.	3.	0.03
2 COMBINED AT	LSR4	408.	4.10	46.	28.	28.	0.20
ROUTED TO	RLS4	404.	4.10	46.	28.	28.	0.20
HYDROGRAPH AT	122K	5.	4.07	1.	0.	0.	0.00
2 COMBINED AT	LSR5	409.	4.10	47.	28.	28.	0.21
2 COMBINED AT	CER11	844.	4.17	467.	289.	289.	2.50
ROUTED TO	RCER11	841.	4.20	467.	289.	289.	2.50

HYDROGRAPH AT	120U	48.	4.03	5.	3.	3.	0.02
2 COMBINED AT	*CER12	862.	4.20	471.	291.	291.	2.52
HYDROGRAPH AT	121A	85.	4.10	9.	5.	5.	0.05
ROUTED TO	R121A	85.	4.10	9.	5.	5.	0.05
HYDROGRAPH AT	121B	31.	4.10	3.	2.	2.	0.02
2 COMBINED AT	LTD1	116.	4.10	12.	7.	7.	0.07
2 COMBINED AT	CER12	929.	4.20	481.	298.	298.	2.59
ROUTED TO	RCER13	928.	4.23	481.	298.	298.	2.59
HYDROGRAPH AT	120V	22.	4.03	2.	1.	1.	0.01
2 COMBINED AT	CER13	937.	4.23	483.	299.	299.	2.60
ROUTED TO	SCER13	934.	4.23	483.	299.	299.	2.60
ROUTED TO	RCER13	933.	4.27	483.	299.	299.	2.60
HYDROGRAPH AT	120X	44.	4.03	4.	3.	3.	0.02
2 COMBINED AT	*CER14	949.	4.27	486.	301.	301.	2.62
HYDROGRAPH AT	120W	14.	4.00	1.	1.	1.	0.00
ROUTED TO	S120W	9.	4.07	1.	1.	1.	0.00
ROUTED TO	R120W	9.	4.10	1.	1.	1.	0.00
2 COMBINED AT	CER14	953.	4.27	487.	301.	301.	2.62

*** NORMAL END OF HEC-1 ***

APPENDIX D.3

HEC-1 OUTPUT FOR 50-YEAR, 6-HOUR STORM

```
*****************************************
*                                       *
*   FLOOD HYDROGRAPH PACKAGE  (HEC-1)   *
*             MAY   1991                *
*           VERSION 4.0.1E              *
*                                       *
*  RUN DATE  11/17/94  TIME  10:23:15   *
*                                       *
*****************************************
```

```
*****************************************
*                                       *
*    U.S. ARMY CORPS OF ENGINEERS       *
*    HYDROLOGIC ENGINEERING CENTER      *
*          609 SECOND STREET            *
*       DAVIS, CALIFORNIA 95616         *
*           (916) 551-1748              *
*                                       *
*****************************************
```

```
X     X  XXXXXXX   XXXXX          X
X     X  X        X     X        XX
X     X  X        X               X
XXXXXXX  XXXX     X        XXXXX  X
X     X  X        X               X
X     X  X        X     X         X
X     X  XXXXXXX   XXXXX         XXX
```

THIS PROGRAM REPLACES ALL PREVIOUS VERSIONS OF HEC-1 KNOWN AS HEC1 (JAN 73), HEC1GS, HEC1DB, AND HEC1KW.

THE DEFINITIONS OF VARIABLES -RTIMP- AND -RTIOR- HAVE CHANGED FROM THOSE USED WITH THE 1973-STYLE INPUT STRUCTURE.
THE DEFINITION OF -AMSKK- ON RM-CARD WAS CHANGED WITH REVISIONS DATED 28 SEP 81. THIS IS THE FORTRAN77 VERSION
NEW OPTIONS: DAMBREAK OUTFLOW SUBMERGENCE , SINGLE EVENT DAMAGE CALCULATION, DSS:WRITE STAGE FREQUENCY,
DSS:READ TIME SERIES AT DESIRED CALCULATION INTERVAL LOSS RATE:GREEN AND AMPT INFILTRATION
KINEMATIC WAVE: NEW FINITE DIFFERENCE ALGORITHM

```
LINE          ID.......1.......2.......3.......4.......5.......6.......7.......8.......9......10

  1           ID   Fountain Hills
  2           ID   Prepared for Anderson-Nelson, Inc.
  3           ID
  4           ID   Cereus Wash
  5           ID   50-Yr 6-Hr Storm
  6           ID   Developed conditions wothout lakes
  7           ID   2 minute time inte4rvale
  8           ID
  9           ID   AGK Engineers (HAA) Nov 17, 1994
 10           ID
 11           IT      2                    300
 12           IO      5
 13           IN     15
 14           JD   3.00    0.01
 15           PC   .000    .008    .016    .025    .033    .041    .050    .058    .066    .074
 16           PC   .087    .099    .118    .138    .216    .377    .834    .911    .931    .950
 17           PC   .962    .972    .983    .991   1.000
 18           JD   2.98    0.50
 19           JD   2.94    2.80
 20           PC   .000    .009    .016    .025    .034    .042    .051    .059    .067    .076
 21           PC   .087    .100    .120    .163    .252    .451    .694    .837    .900    .938
 22           PC   .950    .963    .975    .988   1.000
 23           JD   2.77    16.0
 24           PC   .000    .015    .020    .030    .048    .063    .076    .090    .105    .119
 25           PC   .135    .152    .175    .222    .304    .472    .670    .796    .868    .912
 26           PC   .946    .960    .973    .987   1.000

 27           KK    120A
 28           KM   SUB-BASIN 120A
 29           KM   6-HOUR RAINFALL, PATTERN NO. 1.00 WAS USED TO FIND TC & R FOR THIS BASIN
 30           KM   THIS BASIN USED RAINFALL REDUCTION FACTOR OF1.000
 31           BA    .016
 32           LG    .100    .250   5.700    .170  45.000
 33           UC    .183    .336
 34           UA       0       5      16      30      65      77      84      90      94      97
 35           UA     100

 36           KK    120B
 37           KM   SUB-BASIN 120B
 38           KM   6-HOUR RAINFALL, PATTERN NO. 1.00 WAS USED TO FIND TC & R FOR THIS BASIN
 39           KM   THIS BASIN USED RAINFALL REDUCTION FACTOR OF .999
 40           BA    .053
 41           LG    .150    .250   5.700    .207  45.000
 42           UC    .233    .215
 43           UA       0       5      16      30      65      77      84      90      94      97
 44           UA     100

 45           KK    160A
 46           KM   SUB-BASIN 160A
 47           KM   6-HOUR RAINFALL, PATTERN NO. 1.00 WAS USED TO FIND TC & R FOR THIS BASIN
 48           KM   THIS BASIN USED RAINFALL REDUCTION FACTOR OF1.000
 49           BA    .006
 50           LG    .100    .250   5.700    .170  45.000
 51           UC    .096    .099
 52           UA       0       5      16      30      65      77      84      90      94      97
```

RUNOFF SUMMARY
FLOW IN CUBIC FEET PER SECOND
TIME IN HOURS, AREA IN SQUARE MILES

OPERATION	STATION	PEAK FLOW	TIME OF PEAK	AVERAGE FLOW FOR MAXIMUM PERIOD 6-HOUR	24-HOUR	72-HOUR	BASIN AREA	MAXIMUM STAGE	TIME OF MAX STAGE
HYDROGRAPH AT	120A	31.	4.07	4.	2.	2.	0.02		
HYDROGRAPH AT	120B	121.	4.07	13.	8.	8.	0.05		
HYDROGRAPH AT	160A	18.	4.00	1.	1.	1.	0.01		
ROUTED TO	R160A	17.	4.07	1.	1.	1.	0.01		
3 COMBINED AT	CER1	169.	4.07	18.	11.	11.	0.08		
ROUTED TO	SCER1	131.	4.20	18.	11.	11.	0.08		
HYDROGRAPH AT	120C	13.	4.03	1.	1.	1.	0.00		
2 COMBINED AT	CER2	139.	4.17	19.	12.	12.	0.08		
ROUTED TO	RCER2	138.	4.23	19.	12.	12.	0.08		
HYDROGRAPH AT	120D	162.	4.07	15.	9.	9.	0.07		
2 COMBINED AT	*CER3	276.	4.10	34.	20.	20.	0.15		
HYDROGRAPH AT	120H	9.	4.07	1.	1.	1.	0.00		
ROUTED TO	R120H	9.	4.07	1.	1.	1.	0.00		
HYDROGRAPH AT	120I	17.	4.03	1.	1.	1.	0.01		
2 COMBINED AT	CER3A	25.	4.03	3.	2.	2.	0.01		
ROUTED TO	SCER3A	19.	4.17	2.	1.	1.	0.01		
2 COMBINED AT	CER3	291.	4.10	35.	21.	21.	0.16		
ROUTED TO	SCER3	284.	4.13	35.	21.	21.	0.16		
ROUTED TO	RCER3	283.	4.17	35.	21.	21.	0.16		
HYDROGRAPH AT	120E	33.	4.07	4.	2.	2.	0.02		
2 COMBINED AT	*CER4	312.	4.17	39.	24.	24.	0.18		

HYDROGRAPH AT	126A	18.	4.03	2.	1.	1.	0.01
ROUTED TO	R126A	16.	4.13	2.	1.	1.	0.01
HYDROGRAPH AT	126B	43.	4.07	5.	3.	3.	0.02
2 COMBINED AT	WW1	58.	4.07	7.	4.	4.	0.03
ROUTED TO	RWW1	57.	4.10	7.	4.	4.	0.03
HYDROGRAPH AT	126C	223.	4.13	26.	16.	16.	0.14
ROUTED TO	R126C	216.	4.20	26.	16.	16.	0.14
HYDROGRAPH AT	126D	66.	4.07	6.	4.	4.	0.03
3 COMBINED AT	WW3	316.	4.17	39.	24.	24.	0.20
ROUTED TO	RWW3	314.	4.17	39.	24.	24.	0.20
HYDROGRAPH AT	126E	210.	4.13	19.	11.	11.	0.09
HYDROGRAPH AT	126F	138.	4.10	12.	7.	7.	0.05
2 COMBINED AT	WW4	345.	4.13	31.	19.	19.	0.15
ROUTED TO	RWW4	332.	4.20	31.	19.	19.	0.15
HYDROGRAPH AT	126G	269.	4.10	30.	18.	18.	0.14
HYDROGRAPH AT	126H	47.	4.03	4.	3.	3.	0.02
4 COMBINED AT	WW5	917.	4.17	104.	63.	63.	0.50
ROUTED TO	RWW5	908.	4.23	104.	63.	63.	0.50
HYDROGRAPH AT	126I	211.	4.07	20.	12.	12.	0.08
HYDROGRAPH AT	126J	4.	4.03	0.	0.	0.	0.00
ROUTED TO	R126J	4.	4.07	0.	0.	0.	0.00
3 COMBINED AT	WW6	1009.	4.20	123.	75.	75.	0.58
ROUTED TO	RWW6	1005.	4.23	123.	75.	75.	0.58
HYDROGRAPH AT	126M	55.	4.07	5.	3.	3.	0.03

2 COMBINED AT	*WW7	1032.	4.23	128.	78.	78.	0.61
HYDROGRAPH AT	126K	26.	4.03	3.	2.	2.	0.01
ROUTED TO	R126K	26.	4.10	3.	2.	2.	0.01
HYDROGRAPH AT	126L	48.	4.07	5.	3.	3.	0.02
3 COMBINED AT	WW7	1072.	4.23	136.	82.	82.	0.64
ROUTED TO	SWW7	1016.	4.30	136.	82.	82.	0.64
HYDROGRAPH AT	127A	61.	4.07	5.	3.	3.	0.03
HYDROGRAPH AT	127B	97.	4.03	8.	5.	5.	0.04
2 COMBINED AT	CAP1	157.	4.07	13.	8.	8.	0.07
ROUTED TO	RCAP1	155.	4.10	13.	8.	8.	0.07
HYDROGRAPH AT	127C	104.	4.07	10.	6.	6.	0.04
HYDROGRAPH AT	127D	56.	4.03	5.	3.	3.	0.02
3 COMBINED AT	CAP2	313.	4.07	28.	17.	17.	0.13
ROUTED TO	RCAP2	309.	4.10	28.	17.	17.	0.13
HYDROGRAPH AT	127E	233.	4.07	24.	14.	14.	0.10
HYDROGRAPH AT	127F	326.	4.10	36.	22.	22.	0.15
2 COMBINED AT	CAP3	556.	4.10	59.	36.	36.	0.25
ROUTED TO	RCAP3	551.	4.10	59.	36.	36.	0.25
HYDROGRAPH AT	127G	152.	4.03	15.	9.	9.	0.06
2 COMBINED AT	CAP4	692.	4.10	74.	45.	45.	0.31
ROUTED TO	SCAP4	685.	4.10	74.	45.	45.	0.31
ROUTED TO	R2CAP4	683.	4.13	74.	45.	45.	0.31
HYDROGRAPH AT	127I	20.	4.07	2.	1.	1.	0.01
2 COMBINED AT	*CAP5	700.	4.13	76.	46.	46.	0.32

HYDROGRAPH AT	127H	47.	4.03	4.	3.	3.	0.02
3 COMBINED AT	CAP5	1043.	4.10	108.	65.	65.	0.47
ROUTED TO	RCAP5	1032.	4.13	108.	65.	65.	0.47
HYDROGRAPH AT	127J	76.	4.07	8.	5.	5.	0.03
2 COMBINED AT	CAP6	1098.	4.13	116.	70.	70.	0.50
2 COMBINED AT	WW8	1746.	4.17	245.	148.	148.	1.14
ROUTED TO	RWW8	1725.	4.27	245.	148.	148.	1.14
HYDROGRAPH AT	126N	153.	4.10	17.	10.	10.	0.08
2 COMBINED AT	WW9	1799.	4.23	261.	158.	158.	1.22
2 COMBINED AT	CER4	1989.	4.23	297.	179.	179.	1.40
ROUTED TO	RCER4	1985.	4.27	297.	179.	179.	1.40
HYDROGRAPH AT	120F	56.	4.03	5.	3.	3.	0.02
2 COMBINED AT	*CER5	2002.	4.27	301.	182.	182.	1.42
HYDROGRAPH AT	125A	156.	4.10	19.	12.	12.	0.08
HYDROGRAPH AT	125B	244.	4.10	28.	17.	17.	0.11
2 COMBINED AT	CHK1	399.	4.10	48.	29.	29.	0.19
ROUTED TO	RCHK1	393.	4.13	48.	29.	29.	0.19
HYDROGRAPH AT	125C	74.	4.07	8.	5.	5.	0.03
ROUTED TO	R125C	61.	4.17	8.	5.	5.	0.03
HYDROGRAPH AT	125D	26.	4.20	4.	3.	3.	0.02
3 COMBINED AT	CHK2	478.	4.13	59.	36.	36.	0.24
ROUTED TO	R2CHK2	469.	4.20	59.	36.	36.	0.24
HYDROGRAPH AT	125E	119.	4.03	11.	7.	7.	0.05
2 COMBINED AT	CHK3	550.	4.17	71.	43.	43.	0.28

2 COMBINED AT	CER5	2319.	4.27	367.	222.	222.	1.71
ROUTED TO	RCER5	2310.	4.30	367.	222.	222.	1.71
HYDROGRAPH AT	120G	91.	4.07	9.	5.	5.	0.04
2 COMBINED AT	*CER6	2341.	4.30	375.	227.	227.	1.74
HYDROGRAPH AT	124A	155.	4.07	17.	11.	11.	0.07
HYDROGRAPH AT	124B	123.	4.03	11.	6.	6.	0.04
2 COMBINED AT	LOG1	272.	4.07	28.	17.	17.	0.11
ROUTED TO	RLOG1	268.	4.07	28.	17.	17.	0.11
HYDROGRAPH AT	124D	15.	4.10	2.	1.	1.	0.01
2 COMBINED AT	*LOG2	283.	4.07	30.	18.	18.	0.12
HYDROGRAPH AT	124C	42.	4.07	5.	3.	3.	0.02
2 COMBINED AT	LOG2	324.	4.07	35.	21.	21.	0.14
ROUTED TO	RLOG2	309.	4.17	35.	21.	21.	0.14
HYDROGRAPH AT	124E	126.	4.07	13.	8.	8.	0.05
2 COMBINED AT	LOG3	415.	4.13	48.	29.	29.	0.19
2 COMBINED AT	CER6	2535.	4.30	419.	254.	254.	1.94
ROUTED TO	RCER6	2529.	4.33	419.	254.	254.	1.94
HYDROGRAPH AT	120L	91.	4.07	10.	6.	6.	0.04
2 COMBINED AT	*CER7	2559.	4.33	429.	259.	259.	1.97
HYDROGRAPH AT	120J	8.	4.10	1.	1.	1.	0.01
ROUTED TO	R120J	8.	4.10	1.	1.	1.	0.01
HYDROGRAPH AT	120K	68.	4.07	7.	4.	4.	0.03
2 COMBINED AT	CER7A	77.	4.07	8.	5.	5.	0.04
ROUTED TO	SCER7A	75.	4.10	8.	5.	5.	0.04

ROUTED TO	RCER7A	72.	4.20	8.	5.	5.	0.04
HYDROGRAPH AT	120M	72.	4.10	10.	6.	6.	0.04
HYDROGRAPH AT	123B	47.	4.03	4.	2.	2.	0.02
ROUTED TO	S123B	46.	4.07	4.	2.	2.	0.02
ROUTED TO	R123B	46.	4.07	4.	2.	2.	0.02
ROUTED TO	R123B	46.	4.07	4.	2.	2.	0.02
4 COMBINED AT	CER7	2638.	4.33	448.	271.	271.	2.07
ROUTED TO	RCER7	2622.	4.37	448.	271.	271.	2.07
HYDROGRAPH AT	120N	115.	4.03	13.	8.	8.	0.04
2 COMBINED AT	*CER8	2653.	4.37	460.	278.	278.	2.12
HYDROGRAPH AT	123A	168.	4.07	16.	9.	9.	0.08
ROUTED TO	S123A	162.	4.10	16.	9.	9.	0.08
HYDROGRAPH AT	123D	15.	4.10	2.	1.	1.	0.01
2 COMBINED AT	TRV1	176.	4.10	18.	11.	11.	0.09
ROUTED TO	STRV1	175.	4.13	18.	11.	11.	0.09
ROUTED TO	RTRV1	167.	4.20	18.	11.	11.	0.09
HYDROGRAPH AT	123C	9.	4.00	1.	0.	0.	0.00
ROUTED TO	S123C	9.	4.00	1.	0.	0.	0.00
ROUTED TO	R123C	9.	4.00	1.	0.	0.	0.00
ROUTED TO	R123C	8.	4.13	1.	0.	0.	0.00
3 COMBINED AT	CER8	2728.	4.37	476.	288.	288.	2.20
ROUTED TO	RCER8	2722.	4.40	476.	288.	288.	2.20
HYDROGRAPH AT	120O	23.	4.00	2.	1.	1.	0.01
ROUTED TO	S120O	23.	4.03	2.	1.	1.	0.01

ROUTED TO	R120O	23.	4.03	2.	1.	1.	0.01
ROUTED TO	R120O	19.	4.17	2.	1.	1.	0.01
HYDROGRAPH AT	120Q	86.	4.07	10.	6.	6.	0.04
3 COMBINED AT	*CER9	2753.	4.40	486.	295.	295.	2.25
HYDROGRAPH AT	120P	90.	4.00	6.	4.	4.	0.03
ROUTED TO	S120P	89.	4.00	6.	4.	4.	0.03
ROUTED TO	R120P	87.	4.03	6.	4.	4.	0.03
2 COMBINED AT	CER9	2762.	4.40	491.	298.	298.	2.28
ROUTED TO	SCER9	563.	5.20	477.	298.	298.	2.28
HYDROGRAPH AT	120R	25.	4.07	3.	2.	2.	0.01
HYDROGRAPH AT	120S	17.	4.03	2.	1.	1.	0.01
3 COMBINED AT	CER10	590.	4.13	482.	301.	301.	2.29
ROUTED TO	RCER10	589.	4.17	482.	301.	301.	2.29
HYDROGRAPH AT	120T	5.	4.03	1.	0.	0.	0.00
2 COMBINED AT	*CER11	592.	4.17	482.	301.	301.	2.30
HYDROGRAPH AT	122C	37.	4.03	3.	2.	2.	0.01
DIVERSION TO	DO122C	19.	4.03	2.	1.	1.	0.01
HYDROGRAPH AT	D122C	19.	4.03	1.	1.	1.	0.01
ROUTED TO	R122C	18.	4.07	1.	1.	1.	0.01
HYDROGRAPH AT	122E	83.	4.03	8.	5.	5.	0.03
2 COMBINED AT	LSR2B	101.	4.07	10.	6.	6.	0.05
ROUTED TO	RLSR2B	98.	4.10	10.	6.	6.	0.05
HYDROGRAPH AT	122D	77.	4.07	7.	4.	4.	0.03
ROUTED TO	R122D	77.	4.07	7.	4.	4.	0.03

HYDROGRAPH AT	122F	21.	4.07	3.	2.	2.	0.01
ROUTED TO	R122F	21.	4.10	3.	2.	2.	0.01
HYDROGRAPH AT	122G	66.	4.03	6.	4.	4.	0.02
4 COMBINED AT	LSR2	253.	4.07	26.	16.	16.	0.11
ROUTED TO	RLSR2	251.	4.07	26.	16.	16.	0.11
HYDROGRAPH AT	122A	38.	4.07	5.	3.	3.	0.02
HYDROGRAPH AT	D122C	19.	4.03	2.	1.	1.	0.01
ROUTED TO	RD122C	16.	4.17	2.	1.	1.	0.01
2 COMBINED AT	LSR1B	52.	4.10	7.	4.	4.	0.02
ROUTED TO	RLSR1B	49.	4.20	7.	4.	4.	0.02
HYDROGRAPH AT	122B	96.	4.03	10.	6.	6.	0.03
2 COMBINED AT	LSR1	126.	4.07	16.	10.	10.	0.05
ROUTED TO	RLSR1	126.	4.07	16.	10.	10.	0.05
HYDROGRAPH AT	122H	17.	4.03	2.	1.	1.	0.01
HYDROGRAPH AT	122I	17.	4.03	2.	1.	1.	0.01
4 COMBINED AT	LSR3	409.	4.07	46.	28.	28.	0.18
ROUTED TO	RLSR3	407.	4.10	46.	28.	28.	0.18
HYDROGRAPH AT	122J	55.	4.07	6.	4.	4.	0.03
2 COMBINED AT	LSR4	460.	4.10	52.	32.	32.	0.20
ROUTED TO	RLS4	457.	4.10	52.	32.	32.	0.20
HYDROGRAPH AT	122K	6.	4.07	1.	0.	0.	0.00
2 COMBINED AT	LSR5	463.	4.10	53.	32.	32.	0.21
2 COMBINED AT	CER11	889.	4.13	529.	331.	331.	2.50
ROUTED TO	RCER11	887.	4.17	529.	331.	331.	2.50

HYDROGRAPH AT	120U	54.	4.03	5.	3.	3.	0.02
2 COMBINED AT	*CER12	912.	4.17	534.	334.	334.	2.52
HYDROGRAPH AT	121A	97.	4.10	10.	6.	6.	0.05
ROUTED TO	R121A	97.	4.10	10.	6.	6.	0.05
HYDROGRAPH AT	121B	35.	4.10	4.	2.	2.	0.02
2 COMBINED AT	LTD1	132.	4.10	14.	8.	8.	0.07
2 COMBINED AT	CER12	990.	4.17	546.	341.	341.	2.59
ROUTED TO	RCER13	987.	4.17	546.	341.	341.	2.59
HYDROGRAPH AT	120V	25.	4.03	2.	1.	1.	0.01
2 COMBINED AT	CER13	999.	4.17	548.	342.	342.	2.60
ROUTED TO	SCER13	997.	4.20	548.	342.	342.	2.60
ROUTED TO	RCER13	994.	4.23	547.	342.	342.	2.60
HYDROGRAPH AT	120X	49.	4.03	5.	3.	3.	0.02
2 COMBINED AT	*CER14	1012.	4.23	551.	345.	345.	2.62
HYDROGRAPH AT	120W	16.	4.00	1.	1.	1.	0.00
ROUTED TO	S120W	10.	4.07	1.	1.	1.	0.00
ROUTED TO	R120W	10.	4.10	1.	1.	1.	0.00
2 COMBINED AT	CER14	1017.	4.23	552.	346.	346.	2.62

*** NORMAL END OF HEC-1 ***

APPENDIX D.4

HEC-1 OUTPUT FOR 100-YEAR, 6-HOUR STORM

```
****************************************
*                                      *
*   FLOOD HYDROGRAPH PACKAGE  (HEC-1)  *
*             MAY   1991               *
*           VERSION 4.0.1E             *
*                                      *
*  RUN DATE  11/17/94  TIME  10:43:20  *
*                                      *
****************************************
```

```
****************************************
*                                      *
*   U.S. ARMY CORPS OF ENGINEERS       *
*   HYDROLOGIC ENGINEERING CENTER      *
*         609 SECOND STREET            *
*      DAVIS, CALIFORNIA 95616         *
*          (916) 551-1748              *
*                                      *
****************************************
```

```
X     X  XXXXXXX   XXXXX          X
X     X  X        X     X        XX
X     X  X        X               X
XXXXXXX  XXXX     X        XXXXX  X
X     X  X        X               X
X     X  X        X     X         X
X     X  XXXXXXX   XXXXX         XXX
```

THIS PROGRAM REPLACES ALL PREVIOUS VERSIONS OF HEC-1 KNOWN AS HEC1 (JAN 73), HEC1GS, HEC1DB, AND HEC1KW.

THE DEFINITIONS OF VARIABLES -RTIMP- AND -RTIOR- HAVE CHANGED FROM THOSE USED WITH THE 1973-STYLE INPUT STRUCTURE.
THE DEFINITION OF -AMSKK- ON RM-CARD WAS CHANGED WITH REVISIONS DATED 28 SEP 81. THIS IS THE FORTRAN77 VERSION
NEW OPTIONS: DAMBREAK OUTFLOW SUBMERGENCE , SINGLE EVENT DAMAGE CALCULATION, DSS:WRITE STAGE FREQUENCY,
DSS:READ TIME SERIES AT DESIRED CALCULATION INTERVAL LOSS RATE:GREEN AND AMPT INFILTRATION
KINEMATIC WAVE: NEW FINITE DIFFERENCE ALGORITHM

```
LINE          ID.......1.......2.......3.......4.......5.......6.......7.......8.......9......10

  1           ID   Fountain Hills efluent lake study
  2           ID   Prepared for Anderson-Nelson, Inc.
  3           ID
  4           ID   Cereus Wash
  5           ID   100-Yr 6-Hr Storm
  6           ID   Developed conditions without lakes
  7           ID   2 minutes time interval
  8           ID
  9           ID   AGK Engineers (HAA) Nov 17, 1994
 10           ID
 11           IT      2                    300
 12           IO      5
              *DIAGRAM
 13           IN     15
 14           JD   3.20    0.01
 15           PC   .000    .008    .016    .025    .033    .041    .050    .058    .066    .074
 16           PC   .087    .099    .118    .138    .216    .377    .834    .911    .931    .950
 17           PC   .962    .972    .983    .991   1.000
 18           JD   3.18    0.50
 19           JD   3.14    2.80
 20           PC   .000    .009    .016    .025    .034    .042    .051    .059    .067    .076
 21           PC   .087    .100    .120    .163    .252    .451    .694    .837    .900    .938
 22           PC   .950    .963    .975    .988   1.000

 23           KK   120A
 24           KM   SUB-BASIN 120A
 25           KM   6-HOUR RAINFALL, PATTERN NO. 1.00 WAS USED TO FIND TC & R FOR THIS BASIN
 26           KM   THIS BASIN USED RAINFALL REDUCTION FACTOR OF1.000
 27           BA   .016
 28           LG   .100    .250   5.700    .170  45.000
 29           UC   .183    .336
 30           UA     0       5      16      30      65      77      84      90      94      97
 31           UA   100

 32           KK   120B
 33           KM   SUB-BASIN 120B
 34           KM   6-HOUR RAINFALL, PATTERN NO. 1.00 WAS USED TO FIND TC & R FOR THIS BASIN
 35           KM   THIS BASIN USED RAINFALL REDUCTION FACTOR OF .999
 36           BA   .053
 37           LG   .150    .250   5.700    .207  45.000
 38           UC   .233    .215
 39           UA     0       5      16      30      65      77      84      90      94      97
 40           UA   100

 41           KK   160A
 42           KM   SUB-BASIN 160A
 43           KM   6-HOUR RAINFALL, PATTERN NO. 1.00 WAS USED TO FIND TC & R FOR THIS BASIN
 44           KM   THIS BASIN USED RAINFALL REDUCTION FACTOR OF1.000
 45           BA   .006
 46           LG   .100    .250   5.700    .170  45.000
 47           UC   .096    .099
 48           UA     0       5      16      30      65      77      84      90      94      97
 49           UA   100
```

RUNOFF SUMMARY
FLOW IN CUBIC FEET PER SECOND
TIME IN HOURS, AREA IN SQUARE MILES

OPERATION	STATION	PEAK FLOW	TIME OF PEAK	AVERAGE FLOW FOR MAXIMUM PERIOD			BASIN AREA	MAXIMUM STAGE	TIME OF MAX STAGE
				6-HOUR	24-HOUR	72-HOUR			
HYDROGRAPH AT	120A	33.	4.07	4.	3.	3.	0.02		
HYDROGRAPH AT	120B	130.	4.07	14.	8.	8.	0.05		
HYDROGRAPH AT	160A	20.	4.00	2.	1.	1.	0.01		
ROUTED TO	R160A	19.	4.07	2.	1.	1.	0.01		
3 COMBINED AT	CER1	182.	4.07	19.	12.	12.	0.08		
ROUTED TO	SCER1	138.	4.20	19.	12.	12.	0.08		
HYDROGRAPH AT	120C	14.	4.03	1.	1.	1.	0.00		
2 COMBINED AT	CER2	146.	4.17	21.	12.	12.	0.08		
ROUTED TO	RCER2	145.	4.27	21.	12.	12.	0.08		
HYDROGRAPH AT	120D	174.	4.07	16.	10.	10.	0.07		
2 COMBINED AT	*CER3	294.	4.10	37.	22.	22.	0.15		
HYDROGRAPH AT	120H	10.	4.07	1.	1.	1.	0.00		
ROUTED TO	R120H	10.	4.07	1.	1.	1.	0.00		
HYDROGRAPH AT	120I	18.	4.03	2.	1.	1.	0.01		
2 COMBINED AT	CER3A	27.	4.03	3.	2.	2.	0.01		
ROUTED TO	SCER3A	21.	4.17	2.	1.	1.	0.01		
2 COMBINED AT	CER3	313.	4.10	39.	23.	23.	0.16		
ROUTED TO	SCER3	301.	4.13	39.	23.	23.	0.16		
ROUTED TO	RCER3	301.	4.17	39.	23.	23.	0.16		
HYDROGRAPH AT	120E	36.	4.07	4.	3.	3.	0.02		
2 COMBINED AT	*CER4	332.	4.17	43.	26.	26.	0.18		

HYDROGRAPH AT	126A	19.	4.03	2.	1.	1.	0.01
ROUTED TO	R126A	18.	4.13	2.	1.	1.	0.01
HYDROGRAPH AT	126B	46.	4.07	6.	3.	3.	0.02
2 COMBINED AT	WW1	63.	4.07	7.	4.	4.	0.03
ROUTED TO	RWW1	62.	4.10	7.	4.	4.	0.03
HYDROGRAPH AT	126C	243.	4.13	29.	17.	17.	0.14
ROUTED TO	R126C	241.	4.17	29.	17.	17.	0.14
HYDROGRAPH AT	126D	71.	4.07	6.	4.	4.	0.03
3 COMBINED AT	WW3	353.	4.17	43.	26.	26.	0.20
ROUTED TO	RWW3	348.	4.20	43.	26.	26.	0.20
HYDROGRAPH AT	126E	227.	4.13	20.	12.	12.	0.09
HYDROGRAPH AT	126F	149.	4.10	13.	8.	8.	0.05
2 COMBINED AT	WW4	372.	4.13	34.	20.	20.	0.15
ROUTED TO	RWW4	358.	4.20	34.	20.	20.	0.15
HYDROGRAPH AT	126G	290.	4.10	33.	20.	20.	0.14
HYDROGRAPH AT	126H	51.	4.03	5.	3.	3.	0.02
4 COMBINED AT	WW5	997.	4.17	113.	68.	68.	0.50
ROUTED TO	RWW5	986.	4.23	113.	68.	68.	0.50
HYDROGRAPH AT	126I	227.	4.07	21.	13.	13.	0.08
HYDROGRAPH AT	126J	4.	4.03	1.	0.	0.	0.00
ROUTED TO	R126J	4.	4.07	1.	0.	0.	0.00
3 COMBINED AT	WW6	1094.	4.20	134.	81.	81.	0.58
ROUTED TO	RWW6	1090.	4.23	134.	81.	81.	0.58
HYDROGRAPH AT	126M	59.	4.07	6.	4.	4.	0.03

2 COMBINED AT	*WW7	1119.	4.23	140.	84.	84.	0.61
HYDROGRAPH AT	126K	28.	4.03	3.	2.	2.	0.01
ROUTED TO	R126K	28.	4.10	3.	2.	2.	0.01
HYDROGRAPH AT	126L	52.	4.07	6.	4.	4.	0.02
3 COMBINED AT	WW7	1162.	4.23	148.	90.	90.	0.64
ROUTED TO	SWW7	1089.	4.30	148.	90.	90.	0.64
HYDROGRAPH AT	127A	66.	4.07	6.	4.	4.	0.03
HYDROGRAPH AT	127B	105.	4.03	9.	5.	5.	0.04
2 COMBINED AT	CAP1	170.	4.07	15.	9.	9.	0.07
ROUTED TO	RCAP1	167.	4.10	15.	9.	9.	0.07
HYDROGRAPH AT	127C	112.	4.07	11.	7.	7.	0.04
HYDROGRAPH AT	127D	61.	4.03	5.	3.	3.	0.02
3 COMBINED AT	CAP2	338.	4.07	30.	18.	18.	0.13
ROUTED TO	RCAP2	333.	4.10	30.	18.	18.	0.13
HYDROGRAPH AT	127E	251.	4.07	25.	15.	15.	0.10
HYDROGRAPH AT	127F	350.	4.10	39.	23.	23.	0.15
2 COMBINED AT	CAP3	597.	4.10	64.	39.	39.	0.25
ROUTED TO	RCAP3	592.	4.10	64.	39.	39.	0.25
HYDROGRAPH AT	127G	163.	4.03	16.	9.	9.	0.06
2 COMBINED AT	CAP4	743.	4.10	80.	48.	48.	0.31
ROUTED TO	SCAP4	735.	4.10	80.	48.	48.	0.31
ROUTED TO	R2CAP4	732.	4.13	80.	48.	48.	0.31
HYDROGRAPH AT	127I	21.	4.07	2.	1.	1.	0.01
2 COMBINED AT	*CAP5	750.	4.13	82.	50.	50.	0.32

HYDROGRAPH AT	127H	50.	4.03	5.	3.	3.	0.02
3 COMBINED AT	CAP5	1112.	4.10	117.	71.	71.	0.47
ROUTED TO	RCAP5	1102.	4.13	117.	71.	71.	0.47
HYDROGRAPH AT	127J	82.	4.07	8.	5.	5.	0.03
2 COMBINED AT	CAP6	1174.	4.13	125.	76.	76.	0.50
2 COMBINED AT	WW8	1867.	4.17	267.	161.	161.	1.14
ROUTED TO	RWW8	1852.	4.27	267.	161.	161.	1.14
HYDROGRAPH AT	126N	165.	4.10	18.	11.	11.	0.08
2 COMBINED AT	WW9	1934.	4.23	284.	171.	171.	1.22
2 COMBINED AT	CER4	2143.	4.23	323.	195.	195.	1.40
ROUTED TO	RCER4	2139.	4.27	323.	195.	195.	1.40
HYDROGRAPH AT	120F	60.	4.03	5.	3.	3.	0.02
2 COMBINED AT	*CER5	2158.	4.27	328.	198.	198.	1.42
HYDROGRAPH AT	125A	167.	4.10	21.	13.	13.	0.08
HYDROGRAPH AT	125B	262.	4.10	31.	18.	18.	0.11
2 COMBINED AT	CHK1	428.	4.10	51.	31.	31.	0.19
ROUTED TO	RCHK1	422.	4.13	51.	31.	31.	0.19
HYDROGRAPH AT	125C	80.	4.07	8.	5.	5.	0.03
ROUTED TO	R125C	65.	4.13	8.	5.	5.	0.03
HYDROGRAPH AT	125D	28.	4.20	5.	3.	3.	0.02
3 COMBINED AT	CHK2	514.	4.13	64.	39.	39.	0.24
ROUTED TO	R2CHK2	504.	4.20	64.	39.	39.	0.24
HYDROGRAPH AT	125E	128.	4.03	12.	7.	7.	0.05
2 COMBINED AT	CHK3	592.	4.17	76.	46.	46.	0.28

2 COMBINED AT	CER5	2503.	4.27	400.	242.	242.	1.71
ROUTED TO	RCER5	2490.	4.30	399.	242.	242.	1.71
HYDROGRAPH AT	120G	98.	4.07	10.	6.	6.	0.04
2 COMBINED AT	*CER6	2526.	4.27	409.	247.	247.	1.74
HYDROGRAPH AT	124A	166.	4.07	19.	11.	11.	0.07
HYDROGRAPH AT	124B	131.	4.03	11.	7.	7.	0.04
2 COMBINED AT	LOG1	292.	4.07	30.	18.	18.	0.11
ROUTED TO	RLOG1	287.	4.07	30.	18.	18.	0.11
HYDROGRAPH AT	124D	16.	4.10	2.	1.	1.	0.01
2 COMBINED AT	*LOG2	303.	4.07	32.	20.	20.	0.12
HYDROGRAPH AT	124C	45.	4.07	5.	3.	3.	0.02
2 COMBINED AT	LOG2	348.	4.07	38.	23.	23.	0.14
ROUTED TO	RLOG2	340.	4.13	38.	23.	23.	0.14
HYDROGRAPH AT	124E	135.	4.07	14.	8.	8.	0.05
2 COMBINED AT	LOG3	458.	4.13	51.	31.	31.	0.19
2 COMBINED AT	CER6	2748.	4.27	456.	276.	276.	1.94
ROUTED TO	RCER6	2734.	4.30	456.	276.	276.	1.94
HYDROGRAPH AT	120L	97.	4.07	11.	7.	7.	0.04
2 COMBINED AT	*CER7	2769.	4.30	466.	282.	282.	1.97
HYDROGRAPH AT	120J	9.	4.10	1.	1.	1.	0.01
ROUTED TO	R120J	9.	4.10	1.	1.	1.	0.01
HYDROGRAPH AT	120K	74.	4.07	8.	5.	5.	0.03
2 COMBINED AT	CER7A	83.	4.07	9.	6.	6.	0.04
ROUTED TO	SCER7A	80.	4.13	9.	6.	6.	0.04

ROUTED TO	RCER7A	77.	4.20	9.	6.	6.	0.04
HYDROGRAPH AT	120M	77.	4.10	10.	6.	6.	0.04
HYDROGRAPH AT	123B	50.	4.03	4.	3.	3.	0.02
ROUTED TO	S123B	50.	4.07	4.	3.	3.	0.02
ROUTED TO	R123B	49.	4.07	4.	3.	3.	0.02
ROUTED TO	R123B	49.	4.07	4.	3.	3.	0.02
4 COMBINED AT	CER7	2860.	4.30	488.	295.	295.	2.07
ROUTED TO	RCER7	2843.	4.37	488.	295.	295.	2.07
HYDROGRAPH AT	120N	123.	4.03	13.	8.	8.	0.04
2 COMBINED AT	*CER8	2877.	4.37	500.	303.	303.	2.12
HYDROGRAPH AT	123A	181.	4.07	17.	10.	10.	0.08
ROUTED TO	S123A	175.	4.10	17.	10.	10.	0.08
HYDROGRAPH AT	123D	16.	4.10	2.	1.	1.	0.01
2 COMBINED AT	TRV1	191.	4.10	19.	12.	12.	0.09
ROUTED TO	STRV1	189.	4.13	19.	12.	12.	0.09
ROUTED TO	RTRV1	181.	4.20	19.	12.	12.	0.09
HYDROGRAPH AT	123C	10.	4.00	1.	0.	0.	0.00
ROUTED TO	S123C	10.	4.00	1.	0.	0.	0.00
ROUTED TO	R123C	10.	4.00	1.	0.	0.	0.00
ROUTED TO	R123C	9.	4.13	1.	0.	0.	0.00
3 COMBINED AT	CER8	2961.	4.37	518.	314.	314.	2.20
ROUTED TO	RCER8	2954.	4.40	518.	314.	314.	2.20
HYDROGRAPH AT	120O	25.	4.00	2.	1.	1.	0.01
ROUTED TO	S120O	25.	4.03	2.	1.	1.	0.01

ROUTED TO	R120O	24.	4.03	2.	1.	1.	0.01
ROUTED TO	R120O	21.	4.17	2.	1.	1.	0.01
HYDROGRAPH AT	120Q	92.	4.07	11.	6.	6.	0.04
3 COMBINED AT	*CER9	2988.	4.40	530.	321.	321.	2.25
HYDROGRAPH AT	120P	96.	4.00	6.	4.	4.	0.03
ROUTED TO	S120P	96.	4.00	6.	4.	4.	0.03
ROUTED TO	R120P	94.	4.03	6.	4.	4.	0.03
2 COMBINED AT	CER9	2998.	4.40	535.	324.	324.	2.28
ROUTED TO	SCER9	563.	5.27	515.	324.	324.	2.28
HYDROGRAPH AT	120R	27.	4.07	4.	2.	2.	0.01
HYDROGRAPH AT	120S	18.	4.03	2.	1.	1.	0.01
3 COMBINED AT	CER10	593.	4.10	520.	328.	328.	2.29
ROUTED TO	RCER10	592.	4.13	520.	328.	328.	2.29
HYDROGRAPH AT	120T	6.	4.03	1.	0.	0.	0.00
2 COMBINED AT	*CER11	595.	4.13	520.	328.	328.	2.30
HYDROGRAPH AT	122C	40.	4.03	4.	2.	2.	0.01
DIVERSION TO	DO122C	20.	4.03	2.	1.	1.	0.01
HYDROGRAPH AT	D122C	20.	4.03	2.	1.	1.	0.01
ROUTED TO	R122C	19.	4.07	2.	1.	1.	0.01
HYDROGRAPH AT	122E	89.	4.03	9.	5.	5.	0.03
2 COMBINED AT	LSR2B	108.	4.03	11.	6.	6.	0.05
ROUTED TO	RLSR2B	105.	4.10	11.	6.	6.	0.05
HYDROGRAPH AT	122D	83.	4.07	8.	5.	5.	0.03
ROUTED TO	R122D	83.	4.07	8.	5.	5.	0.03

HYDROGRAPH AT	122F	22.	4.07	3.	2.	2.	0.01
ROUTED TO	R122F	22.	4.10	3.	2.	2.	0.01
HYDROGRAPH AT	122G	70.	4.03	7.	4.	4.	0.02
4 COMBINED AT	LSR2	272.	4.07	28.	17.	17.	0.11
ROUTED TO	RLSR2	269.	4.07	28.	17.	17.	0.11
HYDROGRAPH AT	122A	41.	4.07	5.	3.	3.	0.02
HYDROGRAPH AT	D122C	20.	4.03	2.	1.	1.	0.01
ROUTED TO	RD122C	17.	4.17	2.	1.	1.	0.01
2 COMBINED AT	LSR1B	56.	4.10	7.	4.	4.	0.02
ROUTED TO	RLSR1B	53.	4.20	7.	4.	4.	0.02
HYDROGRAPH AT	122B	103.	4.03	11.	6.	6.	0.03
2 COMBINED AT	LSR1	136.	4.07	18.	11.	11.	0.05
ROUTED TO	RLSR1	136.	4.07	18.	11.	11.	0.05
HYDROGRAPH AT	122H	18.	4.03	2.	1.	1.	0.01
HYDROGRAPH AT	122I	18.	4.03	2.	1.	1.	0.01
4 COMBINED AT	LSR3	439.	4.07	50.	30.	30.	0.18
ROUTED TO	RLSR3	437.	4.10	50.	30.	30.	0.18
HYDROGRAPH AT	122J	59.	4.07	6.	4.	4.	0.03
2 COMBINED AT	LSR4	494.	4.10	56.	34.	34.	0.20
ROUTED TO	RLS4	491.	4.10	56.	34.	34.	0.20
HYDROGRAPH AT	122K	6.	4.07	1.	1.	1.	0.00
2 COMBINED AT	LSR5	497.	4.10	57.	35.	35.	0.21
2 COMBINED AT	CER11	915.	4.13	570.	360.	360.	2.50
ROUTED TO	RCER11	912.	4.17	570.	360.	360.	2.50

HYDROGRAPH AT	120U	57.	4.03	6.	3.	3.	0.02
2 COMBINED AT	*CER12	940.	4.13	574.	363.	363.	2.52
HYDROGRAPH AT	121A	105.	4.10	11.	7.	7.	0.05
ROUTED TO	R121A	105.	4.10	11.	7.	7.	0.05
HYDROGRAPH AT	121B	38.	4.10	4.	3.	3.	0.02
2 COMBINED AT	LTD1	143.	4.10	15.	9.	9.	0.07
2 COMBINED AT	CER12	1027.	4.13	588.	371.	371.	2.59
ROUTED TO	RCER13	1027.	4.17	588.	371.	371.	2.59
HYDROGRAPH AT	120V	27.	4.03	2.	1.	1.	0.01
2 COMBINED AT	CER13	1040.	4.17	590.	373.	373.	2.60
ROUTED TO	SCER13	1035.	4.20	590.	373.	373.	2.60
ROUTED TO	RCER13	1032.	4.20	589.	373.	373.	2.60
HYDROGRAPH AT	120X	52.	4.03	5.	3.	3.	0.02
2 COMBINED AT	*CER14	1052.	4.20	593.	376.	376.	2.62
HYDROGRAPH AT	120W	17.	4.00	1.	1.	1.	0.00
ROUTED TO	S120W	11.	4.07	1.	1.	1.	0.00
ROUTED TO	R120W	11.	4.10	1.	1.	1.	0.00
2 COMBINED AT	CER14	1059.	4.20	594.	376.	376.	2.62

*** NORMAL END OF HEC-1 ***

APPENDIX D.5

HEC-1 OUTPUT FOR 1/2 PMF, 6-HOUR STORM

```
****************************************
*                                      *
*   FLOOD HYDROGRAPH PACKAGE  (HEC-1)  *
*              MAY   1991              *
*           VERSION 4.0.1E             *
*                                      *
*  RUN DATE  11/18/94  TIME  06:23:36  *
*                                      *
****************************************
```

```
****************************************
*                                      *
*    U.S. ARMY CORPS OF ENGINEERS      *
*    HYDROLOGIC ENGINEERING CENTER     *
*          609 SECOND STREET           *
*       DAVIS, CALIFORNIA 95616        *
*          (916) 551-1748              *
*                                      *
****************************************
```

```
X     X  XXXXXXX   XXXXX          X
X     X  X        X     X        XX
X     X  X        X              X
XXXXXXX  XXXX     X        XXXXX X
X     X  X        X              X
X     X  X        X     X        X
X     X  XXXXXXX   XXXXX         XXX
```

THIS PROGRAM REPLACES ALL PREVIOUS VERSIONS OF HEC-1 KNOWN AS HEC1 (JAN 73), HEC1GS, HEC1DB, AND HEC1KW.

THE DEFINITIONS OF VARIABLES -RTIMP- AND -RTIOR- HAVE CHANGED FROM THOSE USED WITH THE 1973-STYLE INPUT STRUCTURE.
THE DEFINITION OF -AMSKK- ON RM-CARD WAS CHANGED WITH REVISIONS DATED 28 SEP 81. THIS IS THE FORTRAN77 VERSION
NEW OPTIONS: DAMBREAK OUTFLOW SUBMERGENCE , SINGLE EVENT DAMAGE CALCULATION, DSS:WRITE STAGE FREQUENCY,
DSS:READ TIME SERIES AT DESIRED CALCULATION INTERVAL LOSS RATE:GREEN AND AMPT INFILTRATION
KINEMATIC WAVE: NEW FINITE DIFFERENCE ALGORITHM

```
LINE          ID.......1.......2.......3.......4.......5.......6.......7.......8.......9......10

  1           ID   Fountain Hills efluent lake study
  2           ID   Prepared for Anderson-Nelson, Inc.
  3           ID
  4           ID   Cereus Wash
  5           ID   6-Hr 1/2 PMP storm
  6           ID   Developed conditions without lakes
  7           ID   2 minutes time intervale
  8           ID
  9           ID   AGK Engineers, Inc. (HAA) Nov 17, 1994
 10           IT       2                    200
 11           IO       5
              *DIAGRAM
 12           IN      15
 13           JD    7.03    0.01
 14           PC    .000   .0007   .0014   .0057   .0113   .0157   .0228   .0292   .0386   .0534
 15           PC   .0712   .0982   .1312   .7067   .8380   .8856   .9294   .9497   .9590   .9711
 16           PC   .9805   .9853   .9910   .9953   1.000
 17           JD    7.03       2

 18           KK    120A
 19           KM   SUB-BASIN 120A
 20           KM   6-HOUR RAINFALL, PATTERN NO. 1.00 WAS USED TO FIND TC & R FOR THIS BASIN
 21           KM   THIS BASIN USED RAINFALL REDUCTION FACTOR OF1.000
 22           BA    .016
 23           LG    .100    .250   5.700    .170  45.000
 24           UC    .183    .336
 25           UA       0       5      16      30      65      77      84      90      94      97
 26           UA     100

 27           KK    120B
 28           KM   SUB-BASIN 120B
 29           KM   6-HOUR RAINFALL, PATTERN NO. 1.00 WAS USED TO FIND TC & R FOR THIS BASIN
 30           KM   THIS BASIN USED RAINFALL REDUCTION FACTOR OF .999
 31           BA    .053
 32           LG    .150    .250   5.700    .207  45.000
 33           UC    .233    .215
 34           UA       0       5      16      30      65      77      84      90      94      97
 35           UA     100

 36           KK    160A
 37           KM   SUB-BASIN 160A
 38           KM   6-HOUR RAINFALL, PATTERN NO. 1.00 WAS USED TO FIND TC & R FOR THIS BASIN
 39           KM   THIS BASIN USED RAINFALL REDUCTION FACTOR OF1.000
 40           BA    .006
 41           LG    .100    .250   5.700    .170  45.000
 42           UC    .096    .099
 43           UA       0       5      16      30      65      77      84      90      94      97
 44           UA     100

 45           KK   R160A
 46           KM   ROUTE 160A THROUGH SUB-BASIN 120B TO CON. POINT CER1
 47           RS       5    FLOW       0
 48           RC    0.04    0.04    0.04    2300   0.054
 49           RX    9920    9942    9975    9997   10003   10050   10060   10085
 50           RY    1810    1806    1800    1791    1791    1802    1804    1810
```

RUNOFF SUMMARY
FLOW IN CUBIC FEET PER SECOND
TIME IN HOURS, AREA IN SQUARE MILES

OPERATION	STATION	PEAK FLOW	TIME OF PEAK	AVERAGE FLOW FOR MAXIMUM PERIOD 6-HOUR	24-HOUR	72-HOUR	BASIN AREA	MAXIMUM STAGE	TIME OF MAX STAGE
HYDROGRAPH AT +	120A	82.	3.33	10.	9.	9.	0.02		
HYDROGRAPH AT	120B	339.	3.33	34.	31.	31.	0.05		
HYDROGRAPH AT	160A	54.	3.27	4.	4.	4.	0.01		
ROUTED TO +	R160A	51.	3.33	4.	4.	4.	0.01		
3 COMBINED AT	CER1	472.	3.33	48.	44.	44.	0.08		
ROUTED TO	SCER1	245.	3.63	48.	44.	44.	0.08		
HYDROGRAPH AT +	120C	37.	3.30	3.	3.	3.	0.00		
2 COMBINED AT	CER2	262.	3.50	52.	47.	47.	0.08		
ROUTED TO	RCER2	261.	3.57	52.	47.	47.	0.08		
HYDROGRAPH AT +	120D	464.	3.33	42.	38.	38.	0.07		
2 COMBINED AT	*CER3	679.	3.37	94.	85.	85.	0.15		
HYDROGRAPH AT	120H	24.	3.33	3.	3.	3.	0.00		
ROUTED TO +	R120H	24.	3.33	3.	3.	3.	0.00		
HYDROGRAPH AT	120I	47.	3.30	4.	4.	4.	0.01		
2 COMBINED AT	CER3A	70.	3.30	7.	7.	7.	0.01		
ROUTED TO +	SCER3A	70.	3.33	7.	6.	6.	0.01		
2 COMBINED AT	CER3	747.	3.37	100.	91.	91.	0.16		
ROUTED TO	SCER3	568.	3.57	100.	91.	91.	0.16		
ROUTED TO +	RCER3	568.	3.57	100.	91.	91.	0.16		
HYDROGRAPH AT	120E	89.	3.33	11.	10.	10.	0.02		
2 COMBINED AT	*CER4	638.	3.53	111.	101.	101.	0.18		

HYDROGRAPH AT	126A	49.	3.30	5.	4.	4.	0.01
ROUTED TO	R126A	47.	3.37	5.	4.	4.	0.01
HYDROGRAPH AT	126B	116.	3.33	14.	12.	12.	0.02
2 COMBINED AT	WW1	163.	3.33	18.	16.	16.	0.03
ROUTED TO	RWW1	159.	3.37	18.	16.	16.	0.03
HYDROGRAPH AT	126C	639.	3.40	82.	74.	74.	0.14
ROUTED TO	R126C	635.	3.43	82.	74.	74.	0.14
HYDROGRAPH AT	126D	190.	3.30	17.	15.	15.	0.03
3 COMBINED AT	WW3	938.	3.40	117.	106.	106.	0.20
ROUTED TO	RWW3	938.	3.43	117.	106.	106.	0.20
HYDROGRAPH AT	126E	611.	3.40	54.	49.	49.	0.09
HYDROGRAPH AT	126F	399.	3.37	35.	31.	31.	0.05
2 COMBINED AT	WW4	1003.	3.37	89.	80.	80.	0.15
ROUTED TO	RWW4	984.	3.47	89.	80.	80.	0.15
HYDROGRAPH AT	126G	741.	3.37	85.	77.	77.	0.14
HYDROGRAPH AT	126H	135.	3.30	12.	11.	11.	0.02
4 COMBINED AT	WW5	2724.	3.43	302.	274.	274.	0.50
ROUTED TO	RWW5	2708.	3.47	302.	274.	274.	0.50
HYDROGRAPH AT	126I	595.	3.33	53.	48.	48.	0.08
HYDROGRAPH AT	126J	11.	3.30	1.	1.	1.	0.00
ROUTED TO	R126J	11.	3.33	1.	1.	1.	0.00
3 COMBINED AT	WW6	3150.	3.43	357.	323.	323.	0.58
ROUTED TO	RWW6	3149.	3.47	357.	323.	323.	0.58
HYDROGRAPH AT	126M	153.	3.33	15.	14.	14.	0.03

2 COMBINED AT	*WW7	3270.	3.47	372.	337.	337.	0.61
HYDROGRAPH AT	126K	71.	3.30	8.	7.	7.	0.01
ROUTED TO	R126K	70.	3.37	8.	7.	7.	0.01
HYDROGRAPH AT	126L	131.	3.33	15.	13.	13.	0.02
3 COMBINED AT	WW7	3439.	3.47	395.	357.	357.	0.64
ROUTED TO	SWW7	2409.	3.67	395.	357.	357.	0.64
HYDROGRAPH AT	127A	177.	3.33	16.	15.	15.	0.03
HYDROGRAPH AT	127B	286.	3.30	23.	21.	21.	0.04
2 COMBINED AT	CAP1	461.	3.30	39.	36.	36.	0.07
ROUTED TO	RCAP1	458.	3.33	39.	36.	36.	0.07
HYDROGRAPH AT	127C	290.	3.33	27.	25.	25.	0.04
HYDROGRAPH AT	127D	164.	3.30	14.	13.	13.	0.02
3 COMBINED AT	CAP2	910.	3.33	81.	73.	73.	0.13
ROUTED TO	RCAP2	903.	3.33	81.	73.	73.	0.13
HYDROGRAPH AT	127E	648.	3.33	65.	59.	59.	0.10
HYDROGRAPH AT	127F	892.	3.37	96.	87.	87.	0.15
2 COMBINED AT	CAP3	1532.	3.37	162.	146.	146.	0.25
ROUTED TO	RCAP3	1530.	3.37	162.	146.	146.	0.25
HYDROGRAPH AT	127G	428.	3.30	38.	35.	35.	0.06
2 COMBINED AT	CAP4	1923.	3.37	200.	181.	181.	0.31
ROUTED TO	SCAP4	1268.	3.57	201.	181.	181.	0.31
ROUTED TO	R2CAP4	1267.	3.60	201.	181.	181.	0.31
HYDROGRAPH AT	127I	55.	3.30	6.	5.	5.	0.01
2 COMBINED AT	*CAP5	1301.	3.60	207.	187.	187.	0.32

HYDROGRAPH AT	127H	129.	3.30	12.	11.	11.	0.02
3 COMBINED AT	CAP5	2104.	3.37	299.	271.	271.	0.47
ROUTED TO	RCAP5	2099.	3.40	299.	271.	271.	0.47
HYDROGRAPH AT	127J	209.	3.33	21.	19.	19.	0.03
2 COMBINED AT	CAP6	2286.	3.40	320.	289.	289.	0.50
2 COMBINED AT	WW8	4373.	3.57	715.	647.	647.	1.14
ROUTED TO	RWW8	4365.	3.63	715.	646.	646.	1.14
HYDROGRAPH AT	126N	425.	3.37	48.	43.	43.	0.08
2 COMBINED AT	WW9	4651.	3.60	762.	690.	690.	1.22
2 COMBINED AT	CER4	5282.	3.60	874.	790.	790.	1.40
ROUTED TO	RCER4	5282.	3.60	873.	790.	790.	1.40
HYDROGRAPH AT	120F	159.	3.30	14.	13.	13.	0.02
2 COMBINED AT	*CER5	5348.	3.60	887.	803.	803.	1.42
HYDROGRAPH AT	125A	412.	3.37	51.	46.	46.	0.08
HYDROGRAPH AT	125B	655.	3.37	75.	68.	68.	0.11
2 COMBINED AT	CHK1	1066.	3.37	127.	114.	114.	0.19
ROUTED TO	RCHK1	1055.	3.40	127.	114.	114.	0.19
HYDROGRAPH AT	125C	203.	3.33	20.	18.	18.	0.03
ROUTED TO	R125C	174.	3.40	20.	18.	18.	0.03
HYDROGRAPH AT	125D	69.	3.50	12.	10.	10.	0.02
3 COMBINED AT	CHK2	1294.	3.40	158.	143.	143.	0.24
ROUTED TO	R2CHK2	1278.	3.43	158.	143.	143.	0.24
HYDROGRAPH AT	125E	339.	3.30	30.	27.	27.	0.05
2 COMBINED AT	CHK3	1533.	3.43	188.	170.	170.	0.28

2 COMBINED AT	CER5	6713.	3.50	1076.	973.	973.	1.71
ROUTED TO	RCER5	6713.	3.53	1075.	973.	973.	1.71
HYDROGRAPH AT	120G	253.	3.33	24.	22.	22.	0.04
2 COMBINED AT	*CER6	6866.	3.53	1099.	994.	994.	1.74
HYDROGRAPH AT	124A	417.	3.33	47.	42.	42.	0.07
HYDROGRAPH AT	124B	351.	3.30	28.	25.	25.	0.04
2 COMBINED AT	LOG1	748.	3.30	75.	68.	68.	0.11
ROUTED TO	RLOG1	747.	3.33	75.	68.	68.	0.11
HYDROGRAPH AT	124D	39.	3.37	6.	5.	5.	0.01
2 COMBINED AT	*LOG2	785.	3.33	81.	73.	73.	0.12
HYDROGRAPH AT	124C	113.	3.33	13.	12.	12.	0.02
2 COMBINED AT	LOG2	898.	3.33	94.	85.	85.	0.14
ROUTED TO	RLOG2	883.	3.37	94.	85.	85.	0.14
HYDROGRAPH AT	124E	348.	3.33	34.	31.	31.	0.05
2 COMBINED AT	LOG3	1216.	3.37	127.	115.	115.	0.19
2 COMBINED AT	CER6	7796.	3.50	1227.	1110.	1110.	1.94
ROUTED TO	RCER6	7781.	3.53	1226.	1109.	1109.	1.94
HYDROGRAPH AT	120L	245.	3.33	25.	23.	23.	0.04
2 COMBINED AT	*CER7	7934.	3.53	1251.	1132.	1132.	1.97
HYDROGRAPH AT	120J	22.	3.37	4.	3.	3.	0.01
ROUTED TO	R120J	22.	3.40	4.	3.	3.	0.01
HYDROGRAPH AT	120K	193.	3.33	21.	19.	19.	0.03
2 COMBINED AT	CER7A	214.	3.33	24.	22.	22.	0.04
ROUTED TO	SCER7A	166.	3.53	24.	22.	22.	0.04

ROUTED TO	RCER7A	166.	3.57	24.	22.	22.	0.04
HYDROGRAPH AT	120M	192.	3.37	26.	23.	23.	0.04
HYDROGRAPH AT	123B	135.	3.30	11.	10.	10.	0.02
ROUTED TO	S123B	119.	3.37	11.	10.	10.	0.02
ROUTED TO	R123B	119.	3.40	11.	10.	10.	0.02
ROUTED TO	R123B	119.	3.40	11.	10.	10.	0.02
4 COMBINED AT	CER7	8357.	3.53	1313.	1188.	1188.	2.07
ROUTED TO	RCER7	8345.	3.57	1312.	1186.	1186.	2.07
HYDROGRAPH AT	120N	315.	3.30	31.	28.	28.	0.04
2 COMBINED AT	*CER8	8509.	3.57	1343.	1215.	1215.	2.12
HYDROGRAPH AT	123A	481.	3.33	45.	41.	41.	0.08
ROUTED TO	S123A	413.	3.43	45.	41.	41.	0.08
HYDROGRAPH AT	123D	40.	3.37	6.	6.	6.	0.01
2 COMBINED AT	TRV1	452.	3.43	51.	47.	47.	0.09
ROUTED TO	STRV1	427.	3.53	51.	47.	47.	0.09
ROUTED TO	RTRV1	424.	3.60	51.	47.	47.	0.09
HYDROGRAPH AT	123C	28.	3.23	2.	2.	2.	0.00
ROUTED TO	S123C	27.	3.27	2.	2.	2.	0.00
ROUTED TO	R123C	27.	3.27	2.	2.	2.	0.00
ROUTED TO	R123C	24.	3.43	2.	2.	2.	0.00
3 COMBINED AT	CER8	8947.	3.57	1396.	1263.	1263.	2.20
ROUTED TO	RCER8	8921.	3.60	1395.	1261.	1261.	2.20
HYDROGRAPH AT	120O	70.	3.27	5.	4.	4.	0.01
ROUTED TO	S120O	69.	3.27	5.	4.	4.	0.01

ROUTED TO	R120O	67.	3.30	5.	4.	4.	0.01
ROUTED TO	R120O	62.	3.40	5.	4.	4.	0.01
HYDROGRAPH AT	120Q	230.	3.33	25.	22.	22.	0.04
3 COMBINED AT	*CER9	9091.	3.57	1424.	1288.	1288.	2.25
HYDROGRAPH AT	120P	277.	3.23	17.	15.	15.	0.03
ROUTED TO	S120P	276.	3.23	17.	15.	15.	0.03
ROUTED TO	R120P	273.	3.27	17.	15.	15.	0.03
2 COMBINED AT	CER9	9152.	3.57	1441.	1304.	1304.	2.28
ROUTED TO	SCER9	563.	4.93	355.	321.	321.	2.28
HYDROGRAPH AT	120R	65.	3.33	8.	8.	8.	0.01
HYDROGRAPH AT	120S	44.	3.30	5.	4.	4.	0.01
3 COMBINED AT	CER10	672.	3.33	369.	333.	333.	2.29
ROUTED TO	RCER10	677.	3.33	366.	331.	331.	2.29
HYDROGRAPH AT	120T	14.	3.30	1.	1.	1.	0.00
2 COMBINED AT	*CER11	690.	3.33	368.	333.	333.	2.30
HYDROGRAPH AT	122C	105.	3.30	9.	8.	8.	0.01
DIVERSION TO	DO122C	52.	3.30	5.	4.	4.	0.01
HYDROGRAPH AT	D122C	52.	3.30	4.	4.	4.	0.01
ROUTED TO	R122C	52.	3.33	4.	4.	4.	0.01
HYDROGRAPH AT	122E	234.	3.30	22.	20.	20.	0.03
2 COMBINED AT	LSR2B	285.	3.30	26.	23.	23.	0.05
ROUTED TO	RLSR2B	280.	3.33	26.	23.	23.	0.05
HYDROGRAPH AT	122D	219.	3.30	20.	18.	18.	0.03
ROUTED TO	R122D	218.	3.30	20.	18.	18.	0.03

HYDROGRAPH AT	122F	54.	3.33	7.	6.	6.	0.01
ROUTED TO	R122F	54.	3.33	7.	6.	6.	0.01
HYDROGRAPH AT	122G	187.	3.27	16.	14.	14.	0.02
4 COMBINED AT	LSR2	718.	3.30	69.	62.	62.	0.11
ROUTED TO	RLSR2	716.	3.33	69.	62.	62.	0.11
HYDROGRAPH AT	122A	102.	3.33	13.	12.	12.	0.02
HYDROGRAPH AT	D122C	52.	3.30	5.	4.	4.	0.01
ROUTED TO	RD122C	49.	3.40	5.	4.	4.	0.01
2 COMBINED AT	LSR1B	149.	3.37	18.	16.	16.	0.02
ROUTED TO	RLSR1B	142.	3.47	18.	16.	16.	0.02
HYDROGRAPH AT	122B	266.	3.30	24.	22.	22.	0.03
2 COMBINED AT	LSR1	352.	3.33	42.	38.	38.	0.05
ROUTED TO	RLSR1	352.	3.33	42.	38.	38.	0.05
HYDROGRAPH AT	122H	46.	3.30	4.	4.	4.	0.01
HYDROGRAPH AT	122I	45.	3.30	5.	4.	4.	0.01
4 COMBINED AT	LSR3	1155.	3.33	120.	108.	108.	0.18
ROUTED TO	RLSR3	1146.	3.33	120.	108.	108.	0.18
HYDROGRAPH AT	122J	152.	3.33	16.	14.	14.	0.03
2 COMBINED AT	LSR4	1298.	3.33	136.	123.	123.	0.20
ROUTED TO	RLS4	1295.	3.37	136.	123.	123.	0.20
HYDROGRAPH AT	122K	15.	3.33	2.	2.	2.	0.00
2 COMBINED AT	LSR5	1310.	3.37	138.	125.	125.	0.21
2 COMBINED AT	CER11	1991.	3.37	506.	457.	457.	2.50
ROUTED TO	RCER11	1992.	3.37	502.	454.	454.	2.50

HYDROGRAPH AT	120U	148.	3.30	13.	12.	12.	0.02
2 COMBINED AT	*CER12	2117.	3.37	515.	466.	466.	2.52
HYDROGRAPH AT	121A	273.	3.37	30.	27.	27.	0.05
ROUTED TO	R121A	274.	3.37	30.	27.	27.	0.05
HYDROGRAPH AT	121B	98.	3.37	12.	11.	11.	0.02
2 COMBINED AT	LTD1	372.	3.37	42.	38.	38.	0.07
2 COMBINED AT	CER12	2488.	3.37	557.	504.	504.	2.59
ROUTED TO	RCER13	2470.	3.37	555.	502.	502.	2.59
HYDROGRAPH AT	120V	71.	3.30	6.	6.	6.	0.01
2 COMBINED AT	CER13	2533.	3.37	561.	508.	508.	2.60
ROUTED TO	SCER13	2415.	3.43	561.	507.	507.	2.60
ROUTED TO	RCER13	2411.	3.47	555.	502.	502.	2.60
HYDROGRAPH AT	120X	139.	3.27	11.	10.	10.	0.02
2 COMBINED AT	*CER14	2477.	3.47	567.	513.	513.	2.62
HYDROGRAPH AT	120W	48.	3.23	3.	3.	3.	0.00
ROUTED TO	S120W	29.	3.33	3.	3.	3.	0.00
ROUTED TO	R120W	29.	3.37	3.	3.	3.	0.00
2 COMBINED AT	CER14	2502.	3.47	570.	515.	515.	2.62

*** NORMAL END OF HEC-1 ***

APPENDIX E

LAKE AND SPILLWAY INFORMATION

APPENDIX E.1

LAKE ELEVATION - AREA - STORAGE RELATIONS

9/24/94
11-03-94

PC 5442.0

FINAL LAKE DESIGN SUMMARY

BERM: 3:1 SIDESLOPE (MAX
25' MAX FROM DOWNSTREAM TOE TO TOP OF BERM EXCEPT 27-1 & 28-3
TOP WIDTH OF BERM = 12 FEET EXCEPT 28-3

LAKE SURFACE: 4 FEET FREEBOARD
MAXIMUM HIGH WATER ELEVATION TO TOP OF BERM ELEVATION

LAKE	~~T.O.B.~~ SPILLWAY ELEV.	H.W. ELEV.	TOE ELEV.	HT. (FT)	MAX DEPTH (FT)	100-YR 2-HR Q (CFS)	1/2 PMF (CFS)	SURFACE (HW) AREA (AC)	LAKE VOLUME (@HW) AC.FT.	HYDRO GRAPH VOL (AC FT)
SHEET 4										
*27-1	1634	1630	1598	36	20	61	188	9.18	125.5	3.15
SHEET 5										
28-1	1708	1704	1684	24	16	97	345	3.75	24.8	4.79
28-2	1720	1716	1696	24	8	91	324	2.54	15.6	4.64
*28-3	1704	1700	1682	18	16	320	1436	10.63	69.4	20.14
28-4	1668	1664	1647	21	10	43	153	1.37	9.02	0.78
28-5	1654	1650	1630	24	16	66	236	2.49	18.6	0.91
28-6	1750	1746	1726	22	26	15	49	2.60	29.2	1.20
28-7	1784	1780	1760	24	16	91	366	1.82	12.8	4.58
28-8	1769	1765	1746	23	13	52	192	0.89	5.58	2.76
28-9	1720	1716	1696	24	12	56	215	8.87	5.08	2.95
28-10	1694	1690	1670	24	14	67	247	1.21	7.82	3.46
SHEET 5.1										
29-1		1900	--	--	20	16	64	0.96	9.27	0.67
						GRAND TOTAL		38.6 Ac.	333 Ac.Ft.	

* Jurisdictional Lake

effluent\5442-2\fldes.sum

LS701.WK1

F.H. EFFLUNT LAKES
LAKE 27-1
PC 5442.3
SEPTMEBER 22, 1994
REVISED OCT 6, 1994
REVISED OCT 10, 1994

LAKE STORAE VOLUME

	ELEV.	SURFACE AREA (AC)	AVG SURFACE (AC)	DELTA ELEVATION (FT)	INTERVAL STORAGE (AC.FT)	ACCUM. STORAGE (AC.FT)	INTERVAL STORAGE (FT3)
	1610	4.009				0.00	
			4.958	10.00	49.575		2159487
	1620	5.906				49.58	
			7.018	6.00	42.108		1834224
	1626	8.130				91.68	
			8.202	2.00	16.404		714558
	1628	8.274				108.09	
H.W.			8.725	2.00	17.449		760078
→	1630	9.175				125.54	
			9.305	1.00	9.305		405326
	1631	9.435				134.84	
			9.565	1.00	9.565		416651
	1632	9.695				144.41	
			9.821	1.00	9.821		427781
	1633	9.946				154.23	
Spillway			10.072	1.00	10.072		438715
→	1634	10.197				164.30	

TOTAL STORAGE 164.30

LS802.WK1

F.H. EFFLNT LAKES
LAKE 28-2
PC 5442.3
AUGUST 31, 1994
REVISED OCT, 6, 19

LAKE STORE VOLUME

ELEV.	SURFACE AREA (AC)	AVG SURFACE (AC)	DELTA ELEVATION (FT.)	INTERVAL STORAGE (AC.FT)	ACCUM. STORAGE (AC.FT)	INTERVAL STORAGE (FT3)
1708	1.113				0.00	
		1.317	2	2.633		114693
1710	1.520				2.63	
		1.804	2	3.607		157121
1712	2.087				6.24	
		2.225	2	4.449		193798
1714	2.362				10.69	
		2.461	2	4.922		214402
1716	2.560				15.61	
		2.639	1	2.639		114955
1717	2.718				18.25	
		2.797	1	2.797		121837
1718	2.876				18.25	
		2.972	1	2.972		129439
1719	3.067				21.22	
		3.163	1	3.163		137759
1720	3.258				24.38	
				TOTAL	24.38	

CHK 2

LS803.WK1

F.H. EFFLUNT LAKES
LAKE 28-3
PC 5442.3
SEPTMEBER 23, 1994
REVISED OCT 6, 1994
REVISED OCT 10, 1994

LAKE STORAE VOLUME

ELEV.	SURFACE AREA (AC)	AVG SURFACE (AC)	DELTA ELEVATION (FT)	INTERVAL STORAGE (AC.FT)	ACCUM. STORAGE (AC.FT)	INTERVAL STORAGE (FT3)
1684	0.423				0.00	
		0.542	2.00	1.083		47175
1686	0.660				1.08	
		0.928	2.00	1.856		80847
1688	1.196				2.94	
		1.500	2.00	3.000		130680
1690	1.804				5.94	
		2.216	2.00	4.432		193058
1692	2.628				10.37	
		3.125	2.00	6.249		272206
1694	3.621				16.62	
		6.357	2.00	12.714		553822
1696	9.093				29.33	
		9.620	2.00	19.239		838051
1698	10.146				48.57	
		10.401	2.00	20.802		906135
1700	10.656				69.38	
		10.821	1.00	10.821		471363
1701	10.986				80.20	
		11.151	1.00	11.151		485738
1702	11.316				91.35	
		11.482	1.00	11.482		500134
1703	11.647				102.83	
		11.812	1.00	11.812		514531
1704	11.977				114.64	

TOTAL STORAGE 114.64

LS806.WK1

F.H. EFFLUNT LAKES
LAKE 28-6
PC 5442.3
SEPTMEBER 13, 1994
REVISED OCT 6, 1994

LAKE STORAE VOLUME

ELEV.	SURFACE AREA (AC)	AVG SURFACE (AC)	DELTA ELEVATION (FT)	INTERVAL STORAGE (AC.FT)	ACCUM. STORAGE (AC.FT)	INTERVAL STORAGE (FT3)
1720.00	0.300				0.00	
		0.293	2.00	0.585		25483
1722.00	0.285				0.59	
		0.591	12.00	7.086		308666
1734.00	0.896				7.67	
		1.047	2.00	2.094		91215
1736.00	1.198				9.77	
		1.471	4.00	5.882		256220
1740.00	1.743				15.65	
		1.951	2.00	3.902		169971
1742.00	2.159				19.55	
		2.308	2.00	4.615		201029
1744.00	2.456				24.16	
		2.531	2.00	5.062		220501
1746.00	2.606				29.23	
		2.657	1.00	2.657		115739
1747.00	2.708				31.88	
		2.759	1.00	2.759		120160
1748.00	2.809				31.88	
		2.880	1.00	2.880		125453
1749.00	2.951				34.76	
		3.022	1.00	3.022		131638
1750.00	3.093				37.79	

TOTAL STORAGE 37.79

LS807.WK1

F.H. EFFLUNT LAKES
LAKE 28-7
PC 5442.3
SEPTMEBER 10, 1994
REVISED OCT 6, 1994

LAKE STORAE VOLUME

ELEV.	SURFACE AREA (AC)	AVG SURFACE (AC)	DELTA ELEVATION (FT)	INTERVAL STORAGE (AC.FT)	ACCUM. STORAGE (AC.FT)	INTERVAL STORAGE (FT3)
1768	0.083				0.00	
		0.217	2.00	0.433		18861
1770	0.350				0.43	
		0.618	2.00	1.236		53840
1772	0.886				1.67	
		0.992	2.00	1.983		86379
1774	1.097				3.65	
		1.263	2.00	2.525		109989
1776	1.428				6.18	
		1.546	2.00	3.091		134644
1778	1.663				9.27	
		1.744	2.00	3.487		151894
1780	1.824				12.76	
		1.884	1.00	1.884		82045
1781	1.943				14.64	
		2.003	1.00	2.003		87229
1782	2.062				14.64	
		2.141	1.00	2.141		93240
1783	2.219				16.78	
		2.298	1.00	2.298		100079
1784	2.376				19.08	

TOTAL STORAGE 19.08

LS808.WK1

F.H. EFFLUENT LAKES
LAKE 28-8
PC 5442.3
SEPTMEBER 11, 1994
REVISED OCT 6, 1994

LAKE STORAE VOLUME

ELEV.	SURFACE AREA (AC)	AVG SURFACE (AC)	DELTA ELEVATION (FT)	INTERVAL STORAGE (AC.FT)	ACCUM. STORAGE (AC.FT)	INTERVAL STORAGE (FT3)
1752.00	0.011				0.00	
		0.030	2.00	0.060		2614
1754.00	0.049				0.06	
		0.086	2.00	0.172		7492
1756.00	0.123				0.23	
		0.245	2.00	0.489		21301
1758.00	0.366				0.72	
		0.519	3.00	1.557		67823
1761.00	0.672				2.28	
		0.770	2.00	1.540		67082
1763.00	0.868				3.82	
		0.882	2.00	1.764		76840
1765.00	0.896				5.58	
		0.948	1.00	0.948		41273
1766.00	0.999				6.53	
		1.046	1.00	1.046		45542
1767.00	1.092				7.58	
		1.139	1.00	1.139		49593
1768.00	1.185				7.58	
		1.239	1.00	1.239		53949
1769.00	1.292				8.81	

TOTAL STORAGE 8.81

APPENDIX E.2

SPILLWAY ELEVATION - DISCHARGE RELATIONS

ACK ENGINEERS, INC.
2255 N. 44th St. • Phoenix, Az. 85008 • Phone (602) 244-2566

SHEET _____ OF _____
BY [illegible] DATE 11/21/94
CHECK _____ DATE _____
CLIENT _____
JOB _____ JOB NO. _____

Stage-Discharge

Stage-discharge relationship was developed assuming critical depth at the upstream end of the spillway. Spillway geometry was obtained from drawing provided by [illegible]. The following equation was used:

$$\frac{Q^2}{g} = \frac{A^3}{B}$$

where Q = Flow rate (cfs)

A = X-sectional Area (ft^2)

B = Top width

g = 32.2 ft/sec^2

Client Anderson-Nelson, Inc.
Job Fountain Hills Efluent Lakes Hydrology **Job # :** 470.42-2920
By HAA **Date :** 23-Nov-94
Check **Date :**

CRITICAL CONDITIONS CALCULATIONS

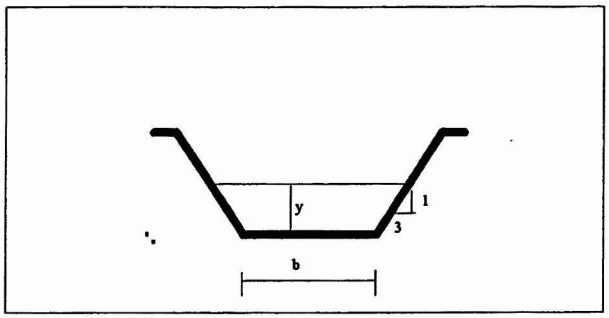

Location : Lake 27-1
Bottom width = 27.5 (ft)
Side slopes = 3 :1
Flow line elevation = 1634 (ft)

Stage (ft)	Depth (ft)	Top width (ft)	Area (ft^2)	Discharge (cfs)
1634.0	0.0	27.5	0	0
1634.5	0.5	30.5	15	57
1635.0	1.0	33.5	31	165
1635.5	1.5	36.5	48	312
1636.0	2.0	39.5	67	495
n/a	n/a	n/a	n/a	n/a
n/a	n/a	n/a	n/a	n/a

Client Anderson-Nelson, Inc.
Job Fountain Hills Efluent Lakes Hydrology **Job # :** 470.42-2920
By HAA **Date :** 23-Nov-94
Check **Date :**

CRITICAL CONDITIONS CALCULATIONS

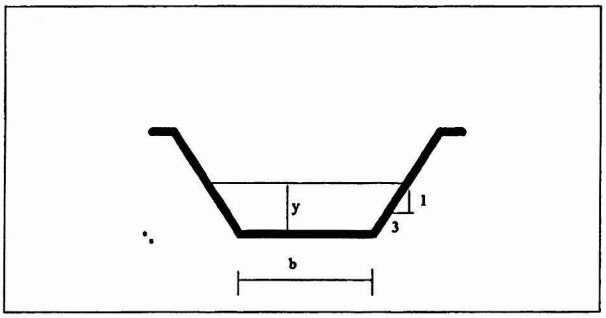

Location : Lake 28.-2
Bottom width = 36.6 (ft)
Side slopes = 3 :1
Flow line elevation = 1720 (ft)

Stage (ft)	Depth (ft)	Top width (ft)	Area (ft^2)	Discharge (cfs)
1720.0	0.0	36.6	0	0
1720.5	0.5	39.6	19	75
1721.0	1.0	42.6	40	217
1721.5	1.5	45.6	62	407
1722.0	2.0	48.6	85	640
n/a	n/a	n/a	n/a	n/a
n/a	n/a	n/a	n/a	n/a

Client Anderson-Nelson, Inc.
Job Fountain Hills Efluent Lakes Hydrology **Job # :** 470.42-2920
By HAA **Date :** 23-Nov-94
Check **Date :**

CRITICAL CONDITIONS CALCULATIONS

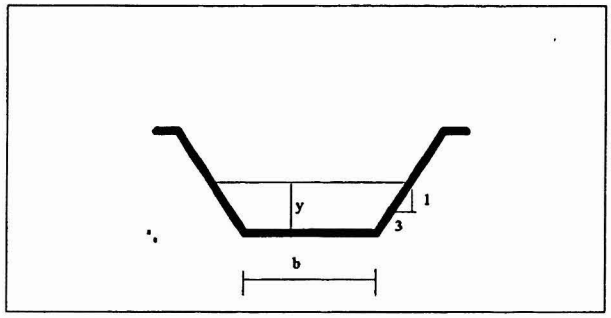

Location : Lake 28.-3
Bottom width = 274 (ft)
Side slopes = 3 :1
Flow line elevation = 1704 (ft)

Stage (ft)	Depth (ft^2)	Top width (ft)	Area (ft^2)	Discharge (ft)
1704.0	0.0	274	0	0
1704.2	0.2	275.2	55	139
1704.4	0.4	276.4	110	394
1704.6	0.6	277.6	165	725
1704.8	0.8	278.8	221	1117
n/a	n/a	n/a	n/a	n/a
n/a	n/a	n/a	n/a	n/a

Client Anderson-Nelson, Inc.
Job Fountain Hills Efluent Lakes Hydrology **Job # :** 470.42-2920
By HAA **Date :** 23-Nov-94
Check **Date :**

CRITICAL CONDITIONS CALCULATIONS

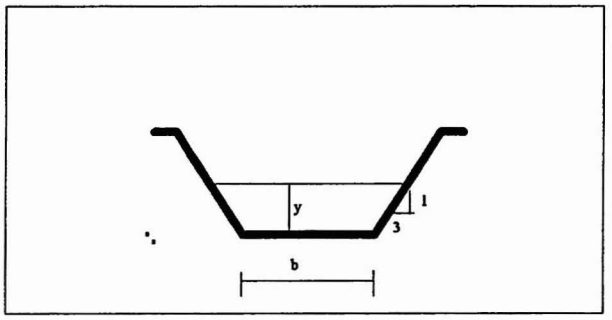

Location : Lake 28.-6
Bottom width = 5 (ft)
Side slopes = 3 :1
Flow line elevation = 1750 (ft)

Stage (ft)	Depth (ft)	Top width (ft)	Area (ft^2)	Discharge (cfs)
1750.0	0.0	5	0	0
1750.5	0.5	8	3	12
1751.0	1.0	11	8	39
1751.5	1.5	14	14	82
1752.0	2.0	17	22	142
n/a	n/a	n/a	n/a	n/a
n/a	n/a	n/a	n/a	n/a

Client Anderson-Nelson, Inc.
Job Fountain Hills Efluent Lakes Hydrology **Job # :** 470.42-2920
By HAA **Date :** 23-Nov-94
Check **Date :**

CRITICAL CONDITIONS CALCULATIONS

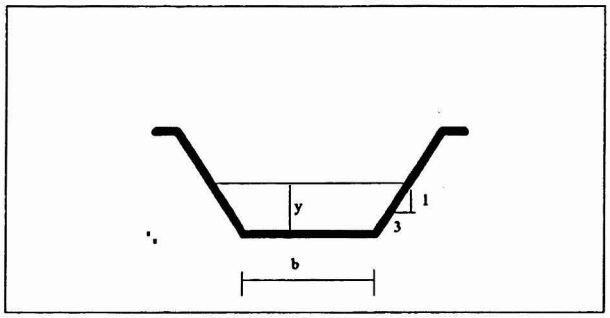

Location : Lake 28.-7
Bottom width = 36.3 (ft)
Side slopes = 3 :1
Flow line elevation = 1784 (ft)

Stage (ft)	Depth (ft)	Top width (ft)	Area (ft^2)	Discharge (cfs)
1784.0	0.0	36.3	0	0
1784.5	0.5	39.3	19	74
1785.0	1.0	42.3	39	215
1785.5	1.5	45.3	61	404
1786.0	2.0	48.3	85	635
n/a	n/a	36.3	n/a	n/a
n/a	n/a	n/a	n/a	n/a

Client Anderson-Nelson, Inc.
Job Fountain Hills Efluent Lakes Hydrology **Job # :** 470.42-2920
By HAA **Date :** 28-Nov-94
Check **Date :**

CRITICAL CONDITIONS CALCULATIONS

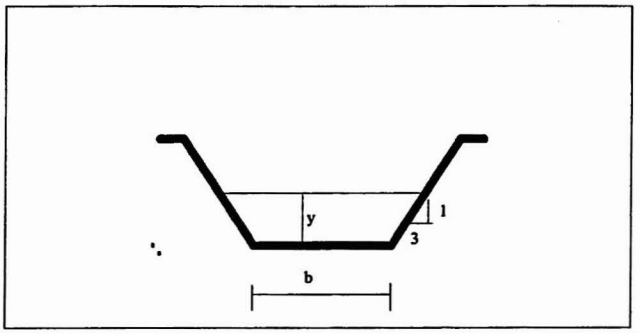

Location : Lake 28.-8
Bottom width = 20.5 (ft)
Side slopes = 3 :1
Flow line elevation = 1769 (ft)

Stage (ft)	Depth (ft)	Top width (ft)	Area (ft^2)	Discharge (cfs)
1769.0	0.0	20.5	0	0
1769.5	0.5	23.5	11	43
1770.0	1.0	26.5	24	126
1770.5	1.5	29.5	38	240
1771.0	2.0	32.5	53	384
n/a	n/a	20.5	n/a	n/a
n/a	n/a	n/a	n/a	n/a

APPENDIX F

HEC-1 OUTPUTS
WITH PROPOSED LAKES IN PLACE

APPENDIX F.1

HEC-1 OUTPUT FOR 1/2 PMF, 6-HOUR STORM

```
****************************************
*                                      *
*   FLOOD HYDROGRAPH PACKAGE  (HEC-1)  *
*              MAY   1991              *
*           VERSION 4.0.1E             *
*                                      *
*  RUN DATE  12/01/94  TIME  17:40:32  *
*                                      *
****************************************
```

```
****************************************
*                                      *
*    U.S. ARMY CORPS OF ENGINEERS      *
*    HYDROLOGIC ENGINEERING CENTER     *
*          609 SECOND STREET           *
*       DAVIS, CALIFORNIA 95616        *
*           (916) 551-1748             *
*                                      *
****************************************
```

```
X     X  XXXXXXX   XXXXX          X
X     X  X        X     X        XX
X     X  X        X              X
XXXXXXX  XXXX     X        XXXXX  X
X     X  X        X              X
X     X  X        X     X        X
X     X  XXXXXXX   XXXXX         XXX
```

THIS PROGRAM REPLACES ALL PREVIOUS VERSIONS OF HEC-1 KNOWN AS HEC1 (JAN 73), HEC1GS, HEC1DB, AND HEC1KW.

THE DEFINITIONS OF VARIABLES -RTIMP- AND -RTIOR- HAVE CHANGED FROM THOSE USED WITH THE 1973-STYLE INPUT STRUCTURE.
THE DEFINITION OF -AMSKK- ON RM-CARD WAS CHANGED WITH REVISIONS DATED 28 SEP 81. THIS IS THE FORTRAN77 VERSION
NEW OPTIONS: DAMBREAK OUTFLOW SUBMERGENCE , SINGLE EVENT DAMAGE CALCULATION, DSS:WRITE STAGE FREQUENCY,
DSS:READ TIME SERIES AT DESIRED CALCULATION INTERVAL LOSS RATE:GREEN AND AMPT INFILTRATION
KINEMATIC WAVE: NEW FINITE DIFFERENCE ALGORITHM

```
LINE          ID.......1.......2.......3.......4.......5.......6.......7.......8.......9......10

  1           ID   Fountain Hills efluent lake study
  2           ID   Prepared for Anderson-Nelson, Inc.
  3           ID
  4           ID   Cereus Wash
  5           ID   6-Hr PMF AND 1/2 PMF storm
  6           ID   Developed conditions without lakes
  7           ID   2 minutes time intervale
  8           ID
  9           ID   AGK Engineers, Inc. (HAA) Nov 17, 1994
 10           IT       2                    200
 11           IO       5
              *DIAGRAM
 12           JR    FLOW       1     0.5

 13           KK    120A
 14           KM   SUB-BASIN 120A
 15           KM   6-HOUR RAINFALL, PATTERN NO. 1.00 WAS USED TO FIND TC & R FOR THIS BASIN
 16           KM   THIS BASIN USED RAINFALL REDUCTION FACTOR OF1.000
 17           IO       5
 18           IN      15
 19           PB   14.05
 20           PC    .000   .0007   .0014   .0057   .0113   .0157   .0228   .0292   .0386   .0534
 21           PC   .0712   .0982   .1312   .7067   .8380   .8856   .9294   .9497   .9590   .9711
 22           PC   .9805   .9853   .9910   .9953   1.000
 23           BA    .016
 24           LG    .100    .250   5.700    .170  45.000
 25           UC    .183    .336
 26           UA       0       5      16      30      65      77      84      90      94      97
 27           UA     100

 28           KK    120B
 29           KM   SUB-BASIN 120B
 30           KM   6-HOUR RAINFALL, PATTERN NO. 1.00 WAS USED TO FIND TC & R FOR THIS BASIN
 31           KM   THIS BASIN USED RAINFALL REDUCTION FACTOR OF .999
 32           BA    .053
 33           LG    .150    .250   5.700    .207  45.000
 34           UC    .233    .215
 35           UA       0       5      16      30      65      77      84      90      94      97
 36           UA     100

 37           KK    160A
 38           KM   SUB-BASIN 160A
 39           KM   6-HOUR RAINFALL, PATTERN NO. 1.00 WAS USED TO FIND TC & R FOR THIS BASIN
 40           KM   THIS BASIN USED RAINFALL REDUCTION FACTOR OF1.000
 41           BA    .006
 42           LG    .100    .250   5.700    .170  45.000
 43           UC    .096    .099
 44           UA       0       5      16      30      65      77      84      90      94      97
 45           UA     100
```

```
LINE          ID.......1.......2.......3.......4.......5.......6.......7.......8.......9......10

  46          KK   R160A
  47          KM   ROUTE 160A THROUGH SUB-BASIN 120B TO CON. POINT CER1
  48          RS       5    FLOW       0
  49          RC    0.04    0.04    0.04    2300   0.054
  50          RX    9920    9942    9975    9997   10003   10050   10060   10085
  51          RY    1810    1806    1800    1791    1791    1802    1804    1810

  52          KK    CER1
  53          KM   CEREUS WASH CONCENTRATION POINT 1 - COMBINE R160A, 120A AND 120B
  54          HC       3

  55          KK   SCER1
  56          KM   ROUTE CER1 THROUGH 60" CULVERT AT FOUNTAIN HILLS BLVD.
  57          KO       3
  58          RS       1    ELEV    1756
  59          SQ       0      37     115     222     355    1000
  60          SE    1757  1759.5    1762    1767  1778.7    1779
  61          SA     .04     .23    2.68
  62          SE    1756    1760    1780

  63          KK    120C
  64          KM   SUB-BASIN 120C
  65          KM   6-HOUR RAINFALL, PATTERN NO. 1.00 WAS USED TO FIND TC & R FOR THIS BASIN
  66          KM   THIS BASIN USED RAINFALL REDUCTION FACTOR OF1.000
  67          BA    .005
  68          LG    .100    .250   5.700    .170  41.330
  69          UC    .121    .176
  70          UA       0       5      16      30      65      77      84      90      94      97
  71          UA     100

  72          KK    CER2
  73          KM   CEREUS WASH CONCENTRATION POINT 2 - COMBINE SCER1 WITH SUB-BASIN 120C
  74          HC       2

  75          KK   RCER2
  76          KM   ROUTE CER2 THROUGH SUB-BASIN 120D
  77          RS       4    FLOW       0
  78          RC     .04     .04     .04    2012    .029
  79          RX    9927    9935    9965   10000   10007   10035   10063   10080
  80          RY    1720    1718    1712    1706    1706    1710    1716    1720

  81          KK    120D
  82          KM   SUB-BASIN 120D
  83          KM   6-HOUR RAINFALL, PATTERN NO. 1.00 WAS USED TO FIND TC & R FOR THIS BASIN
  84          KM   THIS BASIN USED RAINFALL REDUCTION FACTOR OF .999
  85          BA    .069
  86          LG    .132    .250   5.800    .187  24.210
  87          UC    .213    .191
  88          UA       0       5      16      30      65      77      84      90      94      97
  89          UA     100
```

```
LINE          ID.......1.......2.......3.......4.......5.......6.......7.......8.......9......10

  90          KK   *CER3
  91          KM   CEREUS WASH CONCENTRATION POINT *3 - COMBINE RCER2, 120D
  92          HC       2

  93          KK    120H
  94          KM   SUB-BASIN 120H
  95          KM   6-HOUR RAINFALL, PATTERN NO. 1.00 WAS USED TO FIND TC & R FOR THIS BASIN
  96          KM   THIS BASIN USED RAINFALL REDUCTION FACTOR OF1.000
  97          BA    .005
  98          LG    .085    .250   5.800    .160  39.120
  99          UC    .154    .373
 100          UA       0       5      16      30      65      77      84      90      94      97
 101          UA     100

 102          KK   R120H
 103          KM   ROUTE 120H THROUGH 120I
 104          RS       1    FLOW       0
 105          RC     .04     .04     .04     557    .115
 106          RX    9870    9910    9960    9999   10001   10080   10125   10225
 107          RY    1732    1726    1718    1712    1712    1718    1724    1730

 108          KK    120I
 109          KM   SUB-BASIN 120I
 110          KM   6-HOUR RAINFALL, PATTERN NO. 1.00 WAS USED TO FIND TC & R FOR THIS BASIN
 111          KM   THIS BASIN USED RAINFALL REDUCTION FACTOR OF1.000
 112          BA    .007
 113          LG    .150    .250   5.700    .207  25.000
 114          UC    .154    .199
 115          UA       0       5      16      30      65      77      84      90      94      97
 116          UA     100

 117          KK   CER3A
 118          KM   COMBINE R120H AND 120I
 119          HC       2

 120          KK  SCER3A
 121          KM   ROUTE CER3A BY STAGE DISCHARGE TO CER3 - PONDED STORAGE
 122          RS       1    ELEV    1694
 123          SQ       0    25.2     160     473    1019    1850
 124          SE    1700    1701    1702    1703    1704    1705
 125          SA       0     .22     .22
 126          SE    1694    1700    1710

 127          KK    CER3
 128          KM   CEREUS WASH CONCENTRATION POINT 3 - COMBINE (RCER2, 120D),RCER3A
 129          HC       2

 130          KK   SCER3
 131          KM   ROUTE CER3 THROUGH 1-84" CULVERTS AT SHEA BLVD.
 132          KO       3
 133          RS       1    ELEV  1687.3
 134          SQ       0      96     300     610     850     900
 135          SE  1687.3  1690.8  1694.3  1701.3    1710    1711
 136          SA       0     .08    1.47    4.98
```

```
LINE          ID.......1.......2.......3.......4.......5.......6.......7.......8.......9......10

 137          SE  1687.3    1692    1700    1710

 138          KK   RCER3
 139          KM   ROUTE CER3 THROUGH SUB-AREA 120E TO CONFLUENCE WITH WALNUT WASH
 140          RS       1    FLOW       0
 141          RC     .04     .04     .04     768    .034
 142          RX    9920    9974    9985    9999   10001   10021   10135   10222
 143          RY    1690    1678    1674    1670    1670    1674    1680    1690

 144          KK    120E
 145          KM   SUB-BASIN 120E
 146          KM   6-HOUR RAINFALL, PATTERN NO. 1.00 WAS USED TO FIND TC & R FOR THIS BASIN
 147          KM   THIS BASIN USED RAINFALL REDUCTION FACTOR OF1.000
 148          BA    .018
 149          LG    .050    .250   5.800    .160  20.530
 150          UC    .204    .342
 151          UA       0       5      16      30      65      77      84      90      94      97
 152          UA     100

 153          KK   *CER4
 154          KM   CEREUS WASH CONCENTRATION POINT *4 - RCER3, 120E
 155          HC       2

 156          KK    126A
 157          KM   SUB-BASIN 126A
 158          KM   6-HOUR RAINFALL, PATTERN NO. 1.00 WAS USED TO FIND TC & R FOR THIS BASIN
 159          KM   THIS BASIN USED RAINFALL REDUCTION FACTOR OF1.000
 160          BA    .007
 161          LG    .100    .250   5.700    .170  45.000
 162          UC    .142    .197
 163          UA       0       5      16      30      65      77      84      90      94      97
 164          UA     100

 165          KK   R126A
 166          KM   ROUTE SUB-BASIN 126A THROUGH SUB-BASIN 126B
 167          RS       4    FLOW       0
 168          RC     .04    .017     .04    2348    .035
 169          RX    9975    9980    9985    9986   10014   10015   10020   10025
 170          RY  1922.5  1922.5  1922.5    1922    1922  1922.5  1922.5  1922.5

 171          KK    126B
 172          KM   SUB-BASIN 126B
 173          KM   6-HOUR RAINFALL, PATTERN NO. 1.00 WAS USED TO FIND TC & R FOR THIS BASIN
 174          KM   THIS BASIN USED RAINFALL REDUCTION FACTOR OF1.000
 175          BA    .021
 176          LG    .100    .250   5.700    .179  45.000
 177          UC    .192    .292
 178          UA       0       5      16      30      65      77      84      90      94      97
 179          UA     100
```

```
LINE          ID.......1.......2.......3.......4.......5.......6.......7.......8.......9......10

 180          KK     WW1
 181          KM   WALNUT WASH CONCENTRATION POINT 1 - COMBINE R126A AND 126B
 182          HC       2

 183          KK    RWW1
 184          KM   ROUTE WW1 THROUGH SUB-BASIN 126D
 185          RS       1    FLOW       0
 186          RC     .04     .04     .04     546    .019
 187          RX    9895    9935    9955    9962   10003   10010   10020   10045
 188          RY    1830    1818    1816    1813    1813    1816    1820    1830

 189          KK    126C
 190          KM   SUB-BASIN 126C
 191          KM   6-HOUR RAINFALL, PATTERN NO. 1.00 WAS USED TO FIND TC & R FOR THIS BASIN
 192          KM   THIS BASIN USED RAINFALL REDUCTION FACTOR OF .998
 193          BA    .142
 194          LG    .140    .320   5.700    .204  13.770
 195          UC    .354    .350
 196          UA       0       5      16      30      65      77      84      90      94      97
 197          UA     100

 198          KK   R126C
 199          KM   ROUTE 126C THROUGH SUB-BASIN 126D
 200          RS       2    FLOW       0
 201          RC     .04     .04     .04    1291    .029
 202          RX    9895    9935    9955    9962   10003   10010   10020   10045
 203          RY    1830    1818    1816    1813    1813    1816    1820    1830

 204          KK    126D
 205          KM   SUB-BASIN 126D
 206          KM   6-HOUR RAINFALL, PATTERN NO. 1.00 WAS USED TO FIND TC & R FOR THIS BASIN
 207          KM   THIS BASIN USED RAINFALL REDUCTION FACTOR OF1.000
 208          BA    .028
 209          LG    .146    .250   5.700    .204  23.160
 210          UC    .196    .187
 211          UA       0       5      16      30      65      77      84      90      94      97
 212          UA     100

 213          KK     WW3
 214          KM   WALNUT WASH CONCENTRATION POINT 3 - RWW1 AND RWW2 AND 126D
 215          HC       3

 216          KK    RWW3
 217          KM   ROUTE WW3 THROUGH 126H
 218          RS       2    FLOW       0
 219          RC     .04     .04     .04     894    .027
 220          RX    9910    9940    9985    9995   10020   10080   10105   10145
 221          RY    1810    1800    1790    1786    1786    1792    1800    1810
```

```
LINE          ID.......1.......2.......3.......4.......5.......6.......7.......8.......9......10

 222          KK    126E
 223          KM   SUB-BASIN 126E
 224          KM   6-HOUR RAINFALL, PATTERN NO. 1.00 WAS USED TO FIND TC & R FOR THIS BASIN
 225          KM   THIS BASIN USED RAINFALL REDUCTION FACTOR OF .999
 226          BA    .090
 227          LG    .150    .360   6.800    .134  21.880
 228          UC    .242    .187
 229          UA       0       3       5       8      12      20      43      75      90      96
 230          UA     100

 231          KK    126F
 232          KM   SUB-BASIN 126F
 233          KM   6-HOUR RAINFALL, PATTERN NO. 1.00 WAS USED TO FIND TC & R FOR THIS BASIN
 234          KM   THIS BASIN USED RAINFALL REDUCTION FACTOR OF .999
 235          BA    .055
 236          LG    .150    .330   7.300    .110  30.000
 237          UC    .208    .169
 238          UA       0       3       5       8      12      20      43      75      90      96
 239          UA     100

 240          KK     WW4
 241          KM   WALNUT WASH CONCENTRATION POINT 4 - 126E AND 126F
 242          HC       2

 243          KK    RWW4
 244          KM   ROUTE WW4 THROUGH 126G
 245          RS       7    FLOW       0
 246          RC     .04     .04     .04    4158    .031
 247          RX    9870    9940    9980    9995   10005   10015   10040   10090
 248          RY    1820    1802    1800    1796    1796    1800    1810    1820

 249          KK    126G
 250          KM   SUB-BASIN 126G
 251          KM   6-HOUR RAINFALL, PATTERN NO. 1.00 WAS USED TO FIND TC & R FOR THIS BASIN
 252          KM   THIS BASIN USED RAINFALL REDUCTION FACTOR OF .998
 253          BA    .136
 254          LG    .150    .240   6.600    .146  27.550
 255          UC    .304    .273
 256          UA       0       5      16      30      65      77      84      90      94      97
 257          UA     100

 258          KK    126H
 259          KM   SUB-BASIN 126H
 260          KM   6-HOUR RAINFALL, PATTERN NO. 1.00 WAS USED TO FIND TC & R FOR THIS BASIN
 261          KM   THIS BASIN USED RAINFALL REDUCTION FACTOR OF1.000
 262          BA    .020
 263          LG    .127    .250   5.700    .199  28.710
 264          UC    .183    .194
 265          UA       0       5      16      30      65      77      84      90      94      97
 266          UA     100
```

```
LINE          ID.......1.......2.......3.......4.......5.......6.......7.......8.......9......10

 267          KK    WW5
 268          KM   WALNUT WASH CONCENTRATION POINT 5 - RWW3, RWW4, 126H AND 126G
 269          HC      4

 270          KK    RWW5
 271          KM   ROUTE WW5 THROUGH 126I
 272          RS      3    FLOW      0
 273          RC    .04     .04     .04    1740     .02
 274          RX   9790    9860    9910    9975   10010   10055   10090   10150
 275          RY   1780    1764    1762    1758    1758    1766    1768    1780

 276          KK    126I
 277          KM   SUB-BASIN 126I
 278          KM   6-HOUR RAINFALL, PATTERN NO. 1.00 WAS USED TO FIND TC & R FOR THIS BASIN
 279          KM   THIS BASIN USED RAINFALL REDUCTION FACTOR OF .999
 280          BA    .082
 281          LG    .133    .190   6.600    .144  38.280
 282          UC    .225    .163
 283          UA      0       5      16      30      65      77      84      90      94      97
 284          UA     100

 285          KK    126J
 286          KM   SUB-BASIN 126J
 287          KM   6-HOUR RAINFALL, PATTERN NO. 1.00 WAS USED TO FIND TC & R FOR THIS BASIN
 288          KM   THIS BASIN USED RAINFALL REDUCTION FACTOR OF1.000
 289          BA    .002
 290          LG    .100    .250   5.700    .179  45.000
 291          UC    .133    .299
 292          UA      0       5      16      30      65      77      84      90      94      97
 293          UA     100

 294          KK   R126J
 295          KM   ROUTE 126J THROUGH 126I
 296          RS      4    FLOW      0
 297          RC    .04     .02     .04    2299     .066
 298          RX   9790    9860    9910    9975   10010   10055   10090   10150
 299          RY   1780    1764    1762    1758    1758    1766    1768    1780

 300          KK    WW6
 301          KM   WALNUT WASH CONCENTRATION POINT 6 - RWW5, R126J AND 126I
 302          HC      3

 303          KK    RWW6
 304          KM   ROUTE WW6 THROUGH 126M
 305          RS      2    FLOW      0
 306          RC    .04     .04     .04    1206     .019
 307          RX   9830    9890    9925    9985   10005   10020   10055   10100
 308          RY   1738    1736    1722    1720    1720    1722    1730    1740
```

```
LINE          ID.......1.......2.......3.......4.......5.......6.......7.......8.......9......10

 309          KK    126M
 310          KM   SUB-BASIN 126M
 311          KM   6-HOUR RAINFALL, PATTERN NO. 1.00 WAS USED TO FIND TC & R FOR THIS BASIN
 312          KM   THIS BASIN USED RAINFALL REDUCTION FACTOR OF1.000
 313          BA    .025
 314          LG    .144    .230   6.200    .169  25.370
 315          UC    .208    .235
 316          UA       0       5      16      30      65      77      84      90      94      97
 317          UA     100

 318          KK    *WW7
 319          KM   WALNUT WASH CONCENTRATION POIT *7 - RWW6, 126M
 320          HC       2

 321          KK    126K
 322          KM   SUB-BASIN 126K
 323          KM   6-HOUR RAINFALL, PATTERN NO. 1.00 WAS USED TO FIND TC & R FOR THIS BASIN
 324          KM   THIS BASIN USED RAINFALL REDUCTION FACTOR OF1.000
 325          BA    .012
 326          LG    .100    .250   5.700    .179  45.000
 327          UC    .158    .263
 328          UA       0       5      16      30      65      77      84      90      94      97
 329          UA     100

 330          KK   R126K
 331          KM   ROUTE 126K THROUGH 126M
 332          RS       2    FLOW       0
 333          RC     .04     .04     .04    1061    .072
 334          RX    9830    9890    9925    9985   10005   10020   10055   10100
 335          RY    1738    1736    1722    1720    1720    1722    1730    1740

 336          KK    126L
 337          KM   SUB-BASIN 126L
 338          KM   6-HOUR RAINFALL, PATTERN NO. 1.00 WAS USED TO FIND TC & R FOR THIS BASIN
 339          KM   THIS BASIN USED RAINFALL REDUCTION FACTOR OF1.000
 340          BA    .023
 341          LG    .150    .210   6.400    .159  38.360
 342          UC    .217    .274
 343          UA       0       5      16      30      65      77      84      90      94      97
 344          UA     100

 345          KK     WW7
 346          KM   WALNUT WASH CONCENTRATION POINT 7 - (RWW6, 126M), R126K, 126L
 347          HC       3

 348          KK    SWW7
 349          KM   ROUTE WW7 THROUGH 10'BY 10' RCB UNDER SHEA BLVD.
 350          RS       1    ELEV    1704
 351          SQ       0     290     800    1650    1850
 352          SE    1704    1709    1714    1724    1727
 353          SA       0     .01     .44    2.44
 354          SE    1704    1710    1716  1728.5
```

```
LINE          ID.......1.......2.......3.......4.......5.......6.......7.......8.......9......10

 355          KK   127A
 356          KM   SUB-BASIN 127A
 357          KM   6-HOUR RAINFALL, PATTERN NO. 1.00 WAS USED TO FIND TC & R FOR THIS BASIN
 358          KM   THIS BASIN USED RAINFALL REDUCTION FACTOR OF1.000
 359          BA    .028
 360          LG    .150    .250   5.700    .207  18.000
 361          UC    .204    .215
 362          UA       0       5      16      30      65      77      84      90      94      97
 363          UA     100

 364          KK   127B
 365          KM   SUB-BASIN 127B
 366          KM   6-HOUR RAINFALL, PATTERN NO. 1.00 WAS USED TO FIND TC & R FOR THIS BASIN
 367          KM   THIS BASIN USED RAINFALL REDUCTION FACTOR OF .999
 368          BA    .039
 369          LG    .100    .250   5.700    .189  18.000
 370          UC    .192    .159
 371          UA       0       5      16      30      65      77      84      90      94      97
 372          UA     100

 373          KK   CAP1
 374          KM   CAP WASH CONCENTRATION POINT 1 - SUB-BASINS 127A AND 127B
 375          HC       2

 376          KK   L28-7
 377          KM   STORAGE LAKE 28-7
 378          RS       1    ELEV    1780
 379          SQ       0    .001      74     215     404     635
 380          SE    1780    1784  1784.5    1785  1785.5    1786
 381          SA    .083   1.097   1.428   1.663   1.824   1.943   2.062   2.219   2.376
 382          SE    1768    1774    1776    1778    1780    1781    1782    1783    1784

 383          KK   RCAP1
 384          KM   ROUTE CAP1 THROUGH 127D
 385          RS       2    FLOW       0
 386          RC     .04     .04     .04    1146    .026
 387          RX    9870    9910    9955    9985   10000   10020   10050   10100
 388          RY    1760    1756    1750    1742    1742    1744    1750    1760

 389          KK   127C1
 390          KM   SUB-BASIN 127-C1
 391          KM   6-HOUR RAINFALL, PATTERN NO. 1.00 WAS USED TO FIND TC & R FOR THIS BASIN
 392          KM   THIS BASIN USED RAINFALL REDUCTION FACTOR OF1.000
 393          BA    .028
 394          LG    .150    .170   6.800    .134  43.710
 395          UC    .183    .161
 396          UA       0       5      16      30      65      77      84      90      94      97
 397          UA     100
```

```
LINE          ID.......1.......2.......3.......4.......5.......6.......7.......8.......9......10

 398          KK   L28-8
 399          KM   STORAGE LAKE 28-8
 400          RS       1    ELEV    1765
 401          SQ       0    .001      43     126     240     384
 402          SE    1765    1769  1769.5    1770  1770.5    1771
 403          SA    .123    .366    .672    .868    .896    .999   1.092   1.185   1.292
 404          SE    1756    1758    1761    1763    1765    1766    1767    1768    1769

 405          KK  R127C1
 406          KM   ROUTE 127C1 THROUGH BASIN 127C2 TO CONC. POINT CAP2
 407          RS       2    FLOW       0
 408          RC     .04     .04     .04     537    .045
 409          RX    9895    9940    9950    9995   10005   10047   10105   10180
 410          RY    1741    1740    1738    1732    1732    1736    1739    1748

 411          KK   127C2
 412          KM   SUB-BASIN 127-C2
 413          KM   6-HOUR RAINFALL, PATTERN NO. 1.00 WAS USED TO FIND TC & R FOR THIS BASIN
 414          KM   THIS BASIN USED RAINFALL REDUCTION FACTOR OF1.000
 415          BA    .014
 416          LG    .150    .170   6.800    .134  33.710
 417          UC    .162    .167
 418          UA       0       5      16      30      65      77      84      90      94      97
 419          UA     100

 420          KK    127D
 421          KM   SUB-BASIN 127D
 422          KM   6-HOUR RAINFALL, PATTERN NO. 1.00 WAS USED TO FIND TC & R FOR THIS BASIN
 423          KM   THIS BASIN USED RAINFALL REDUCTION FACTOR OF1.000
 424          BA    .024
 425          LG    .150    .250   5.800    .195  15.000
 426          UC    .188    .185
 427          UA       0       5      16      30      65      77      84      90      94      97
 428          UA     100

 429          KK    CAP2
 430          KM   CAP WASH CONCENTRATION POINT 2 - RCAP1, 127C2, R127C1, AND 127D
 431          HC       4

 432          KK   RCAP2
 433          KM   ROUTE CAP2 THROUGH 127H
 434          RS       1    FLOW       0
 435          RC     .04     .04     .04     545    .017
 436          RX    9895    9940    9950    9995   10005   10047   10105   10180
 437          RY    1741    1740    1738    1732    1732    1736    1739    1748

 438          KK    127E
 439          KM   SUB-BASIN 127E
 440          KM   6-HOUR RAINFALL, PATTERN NO. 1.00 WAS USED TO FIND TC & R FOR THIS BASIN
 441          KM   THIS BASIN USED RAINFALL REDUCTION FACTOR OF .999
 442          BA    .103
 443          LG    .150    .204   6.800    .134  28.410
 444          UC    .258    .216
 445          UA       0       5      16      30      65      77      84      90      94      97
```

```
LINE          ID.......1.......2.......3.......4.......5.......6.......7.......8.......9......10

 446          UA     100

 447          KK    127F
 448          KM   SUB-BASIN 127F
 449          KM   6-HOUR RAINFALL, PATTERN NO. 1.00 WAS USED TO FIND TC & R FOR THIS BASIN
 450          KM   THIS BASIN USED RAINFALL REDUCTION FACTOR OF .998
 451          BA    .147
 452          LG    .150    .229   7.300    .110  40.450
 453          UC    .283    .230
 454          UA       0       5      16      30      65      77      84      90      94      97
 455          UA     100

 456          KK    CAP3
 457          KM   CAP WASH CONCENTRATION POINT 3 - SUB-BASINS 127E AND 127F
 458          HC       2

 459          KK   RCAP3
 460          KM   ROUTE CAP3 THROUGH 127G
 461          RS       2    FLOW       0
 462          RC     .04     .04     .04    1253    .025
 463          RX    9870    9920    9940    9974   10007   10055   10075   10130
 464          RY    1780    1770    1768    1758    1758    1770    1774    1780

 465          KK    127G
 466          KM   SUB-BASIN 127G
 467          KM   6-HOUR RAINFALL, PATTERN NO. 1.00 WAS USED TO FIND TC & R FOR THIS BASIN
 468          KM   THIS BASIN USED RAINFALL REDUCTION FACTOR OF .999
 469          BA    .057
 470          LG    .150    .150   7.000    .122  45.570
 471          UC    .204    .156
 472          UA       0       5      16      30      65      77      84      90      94      97
 473          UA     100

 474          KK    CAP4
 475          KM   CAP WASH CONCENTRATION POINT 4 - RCAP3 AND SUB-BASIN 127G
 476          HC       2

 477          KK   SCAP4
 478          KM   ROUTE CAP4 THROUGH 2-72" CULVERTS UNDER SHEA BLVD.
 479          KO       3
 480          RS       1    ELEV  1742.2
 481          SQ       0     130     410     830    1300
 482          SE  1742.2  1742.5  1748.2  1754.2  1766.5
 483          SA       0    .008    .037    3.31
 484          SE  1742.2    1746    1752    1766

 485          KK  R2CAP4
 486          KM   ROUTE CAP4 THROUGH 127I
 487          RS       1    FLOW       0
 488          RC     .04     .04     .04     743     .02
 489          RX    9800    9837    9985    9995   10020   10070   10180   10200
 490          RY    1760  1745.5    1738    1736    1736    1742    1752    1756
```

```
LINE          ID.......1.......2.......3.......4.......5.......6.......7.......8.......9......10

 491          KK    127I
 492          KM   SUB-BASIN 127I
 493          KM   6-HOUR RAINFALL, PATTERN NO. 1.00 WAS USED TO FIND TC & R FOR THIS BASIN
 494          KM   THIS BASIN USED RAINFALL REDUCTION FACTOR OF1.000
 495          BA    .010
 496          LG    .100    .250   6.000    .158  90.000
 497          UC    .158    .292
 498          UA       0       5      16      30      65      77      84      90      94      97
 499          UA     100

 500          KK   L28-6
 501          KM   STORAGE LAKE 28-6
 502          RS       1    ELEV    1746
 503          SQ       0    .001      12      39      82     142
 504          SE    1746    1750  1750.5    1751  1751.5    1752
 505          SA    .300    .285   1.743   2.606   2.708   2.809   2.951   3.093
 506          SE    1720    1722    1740    1746    1747    1748    1749    1750

 507          KK   *CAP5
 508          KM   CAP WASH CONCENTRATION POINT *5 - RCAP4, 127I
 509          HC       2

 510          KK    127H
 511          KM   SUB-BASIN 127H
 512          KM   6-HOUR RAINFALL, PATTERN NO. 1.00 WAS USED TO FIND TC & R FOR THIS BASIN
 513          KM   THIS BASIN USED RAINFALL REDUCTION FACTOR OF1.000
 514          BA    .018
 515          LG    .150    .150   7.000    .122  36.740
 516          UC    .171    .180
 517          UA       0       5      16      30      65      77      84      90      94      97
 518          UA     100

 519          KK    CAP5
 520          KM   CAP WASH CONCENTRATION POINT 5 - RCAP4, 127H, (RCAP4,127I)
 521          HC       3

 522          KK   RCAP5
 523          KM   ROUTE CAP5 THROUGH 127J TO WALNUT WASH (WW8)
 524          RS       2    FLOW       0
 525          RC     .04     .04     .04    1382    .018
 526          RX    9895    9937    9960    9982   10005   10030   10075   10125
 527          RY    1730    1714  1711.5    1710    1710    1714    1720    1730

 528          KK    127J
 529          KM   SUB-BASIN 127J
 530          KM   6-HOUR RAINFALL, PATTERN NO. 1.00 WAS USED TO FIND TC & R FOR THIS BASIN
 531          KM   THIS BASIN USED RAINFALL REDUCTION FACTOR OF1.000
 532          BA    .032
 533          LG    .100    .170   6.800    .122  31.060
 534          UC    .204    .212
 535          UA       0       5      16      30      65      77      84      90      94      97
 536          UA     100
```

```
LINE          ID.......1.......2.......3.......4.......5.......6.......7.......8.......9......10

 537          KK    CAP6
 538          KM   CAP WASH COMBINATION POINT 6 - RCAP5, 127J
 539          HC       2

 540          KK     WW8
 541          KM   WALNUT WASH CONCENTRATION POINT 8 - SWW7,CAP6
 542          KM   CONFLUENCE OF CAP WASH AND WALNUT WASH
 543          HC       2

 544          KK    RWW8
 545          KM   ROUTE WW8 THROUGH 126N TO CONFLUENCE WITH CEREUS WASH
 546          RS       5    FLOW       0
 547          RC     .04     .04     .04    2789    .016
 548          RX    9850    9915    9930    9990   10005   10030   10142   10205
 549          RY    1700    1686    1682    1678    1678    1680 1685.25    1700

 550          KK    126N
 551          KM   SUB-BASIN 126N
 552          KM   6-HOUR RAINFALL, PATTERN NO. 1.00 WAS USED TO FIND TC & R FOR THIS BASIN
 553          KM   THIS BASIN USED RAINFALL REDUCTION FACTOR OF .999
 554          BA    .077
 555          LG    .150    .230   6.200    .171  27.920
 556          UC    .271    .272
 557          UA       0       5      16      30      65      77      84      90      94      97
 558          UA     100

 559          KK     WW9
 560          KM    WALNUT WASH CONCENTRATION POIT 9 - RWW8, 126N
 561          HC       2

 562          KK    CER4
 563          KM   CEREUS WASH CONCENTRATION POINT 4 - (RCER3,120E), (WW9, 126N)
 564          KM   CONFLUENCE OF CEREUS WASH AND WALNUT WASH
 565          HC       2

 566          KK   RCER4
 567          KM   ROUTE CER4 THROUGH SUB-BASIN 120F TO CONFLUENCE WITH CHUKAR WASH
 568          RS       2    FLOW       0
 569          RC     .04     .04     .04    1183    .015
 570          RX    9967    9973    9982    9999   10055   10135   10235   10325
 571          RY    1766    1762    1756    1744    1744    1756  1753.5    1756

 572          KK    120F
 573          KM   SUB-BASIN 120F
 574          KM   6-HOUR RAINFALL, PATTERN NO. 1.00 WAS USED TO FIND TC & R FOR THIS BASIN
 575          KM   THIS BASIN USED RAINFALL REDUCTION FACTOR OF1.000
 576          BA    .022
 577          LG    .150    .250   6.000    .183  34.960
 578          UC    .162    .174
 579          UA       0       5      16      30      65      77      84      90      94      97
 580          UA     100
```

```
LINE          ID.......1.......2.......3.......4.......5.......6.......7.......8.......9......10

 581          KK   *CER5
 582          KM   CEREUS WASH CONCENTRATION POIT *5 - RCER4, 120F
 583          HC       2

 584          KK    125A
 585          KM   SUB-BASIN 125A
 586          KM   6-HOUR RAINFALL, PATTERN NO. 1.00 WAS USED TO FIND TC & R FOR THIS BASIN
 587          KM   THIS BASIN USED RAINFALL REDUCTION FACTOR OF .999
 588          BA    .077
 589          LG    .150    .150   7.300    .110  40.500
 590          UC    .279    .298
 591          UA       0       5      16      30      65      77      84      90      94      97
 592          UA     100

 593          KK    125B
 594          KM   SUB-BASIN 125B
 595          KM   6-HOUR RAINFALL, PATTERN NO. 1.00 WAS USED TO FIND TC & R FOR THIS BASIN
 596          KM   THIS BASIN USED RAINFALL REDUCTION FACTOR OF .999
 597          BA    .113
 598          LG    .150    .150   7.300    .110  40.250
 599          UC    .292    .254
 600          UA       0       5      16      30      65      77      84      90      94      97
 601          UA     100

 602          KK    CHK1
 603          KM   CHUKAR WASH CONCENTRATION POINT 1 - SUB-BASINS 125A AND 125B
 604          HC       2

 605          KK   RCHK1
 606          KM   ROUTE CHK1 THROUGH 125D
 607          RS       1    FLOW       0
 608          RC     .04     .04     .04     544    .004
 609          RX    9830    9880    9915    9955   10005   10032   10140   10190
 610          RY    1700    1696    1690    1682    1682    1690    1690    1698

 611          KK    125C
 612          KM   SUB-BASIN 125C
 613          KM   6-HOUR RAINFALL, PATTERN NO. 1.00 WAS USED TO FIND TC & R FOR THIS BASIN
 614          KM   THIS BASIN USED RAINFALL REDUCTION FACTOR OF1.000
 615          BA    .030
 616          LG    .150    .150   7.300    .110  40.060
 617          UC    .200    .198
 618          UA       0       5      16      30      65      77      84      90      94      97
 619          UA     100

 620          KK   R125C
 621          KM   ROUTE 125C THROUGH SUB-BASIN 125D TO CON. POINT CHK2
 622          RS       1    FLOW       0
 623          RC    0.04    0.04    0.04     290  0.0001
 624          RX    9905    9930    9945    9972   10025   10080   10090   10130
 625          RY    1680    1674    1670  1665.5  1665.5    1668    1670    1680
```

```
LINE          ID.......1.......2.......3.......4.......5.......6.......7.......8.......9......10

 626          KK   125D
 627          KM   SUB-BASIN 125D
 628          KM   6-HOUR RAINFALL, PATTERN NO. 1.00 WAS USED TO FIND TC & R FOR THIS BASIN
 629          KM   THIS BASIN USED RAINFALL REDUCTION FACTOR OF1.000
 630          BA    .018
 631          LG    .100    .210   6.400    .159 100.000
 632          UC    .471    .454
 633          UA       0       5      16      30      65      77      84      90      94      97
 634          UA     100

 635          KK   CHK2
 636          KM   CHUKAR WASH CONCENTRATION POINT 2 - RCHK1 AND SUB BASINS 125C AND 125D
 637          HC       3

 638          KK   L28-3
 639          KM   STORAGE LAKE 28-3
 640          KO       3
 641          RS       1    ELEV    1700
 642          SQ       0      .1      49     139     256     394
 643          SE    1700    1704  1704.1  1704.2  1704.3  1704.4
 644          SA  10.146  10.656  10.986  11.316  11.647  11.997
 645          SE    1698    1700    1701    1702    1703    1704

 646          KK  R2CHK2
 647          KM   ROUTE CHK2 THROUGH SUB-BASIN 125E TO CONFLUENCE WITH CEREUS WASH
 648          RS       3    FLOW       0
 649          RC     .04     .04     .04    1780    .027
 650          RX    9905    9930    9945    9972   10025   10080   10090   10130
 651          RY    1680    1674    1670  1665.5  1665.5    1668    1670    1680

 652          KK   125E
 653          KM   SUB-BASIN 125E
 654          KM   6-HOUR RAINFALL, PATTERN NO. 1.00 WAS USED TO FIND TC & R FOR THIS BASIN
 655          KM   THIS BASIN USED RAINFALL REDUCTION FACTOR OF .999
 656          BA    .047
 657          LG    .150    .230   6.200    .171  42.460
 658          UC    .196    .170
 659          UA       0       5      16      30      65      77      84      90      94      97
 660          UA     100

 661          KK   CHK3
 662          KM   CHUKAR WASH CONCENTRATON POINT 3 - RCHK2, 125E
 663          HC       2

 664          KK   CER5
 665          KM   CEREUS WASH CONCENTRATION POINT 5 - (RCER4, 120F), CHK3
 666          KM   CONFLUENCE OF CHUKAR WASH AND CEREUS WASH
 667          HC       2
```

```
LINE          ID.......1.......2.......3.......4.......5.......6.......7.......8.......9......10

 668          KK   RCER5
 669          KM   ROUTE CEREUS WASH (CER5) THROUGH 120G TO CONFLUENCE WITH LOGAN WASH
 670          RS       2    FLOW       0
 671          RC     .04     .04     .04    1119    .017
 672          RX    9885    9930    9970    9999   10001   10006   10200   10299
 673          RY    1650    1645    1640    1630    1630    1634    1631    1640

 674          KK    120G
 675          KM   SUB-BASIN 120G
 676          KM   6-HOUR RAINFALL, PATTERN NO. 1.00 WAS USED TO FIND TC & R FOR THIS BASIN
 677          KM   THIS BASIN USED RAINFALL REDUCTION FACTOR OF1.000
 678          BA    .037
 679          LG    .150    .170   6.800    .134  37.920
 680          UC    .204    .192
 681          UA       0       5      16      30      65      77      84      90      94      97
 682          UA     100

 683          KK   *CER6
 684          KM   CEREUS WASH CONCENTRATION POINT *6 - RCER5, 120G
 685          HC       2

 686          KK    124A
 687          KM   SUB-BASIN 124A
 688          KM   6-HOUR RAINFALL, PATTERN NO. 1.00 WAS USED TO FIND TC & R FOR THIS BASIN
 689          KM   THIS BASIN USED RAINFALL REDUCTION FACTOR OF .999
 690          BA    .071
 691          LG    .150    .150   7.000    .122  46.170
 692          UC    .254    .252
 693          UA       0       5      16      30      65      77      84      90      94      97
 694          UA     100

 695          KK   L28-2
 696          KM   STORAGE LAKE 28-2
 697          RS       1    ELEV    1716
 698          SQ       0    .001      75     217     407     640
 699          SE    1716    1720  1720.5    1721  1721.5    1722
 700          SA   1.113   1.520   2.087   2.362   2.560   2.718   2.876   3.067   3.258
 701          SE    1708    1710    1712    1714    1716    1717    1718    1719    1720

 702          KK    124B
 703          KM   SUB-BASIN 124B
 704          KM   6-HOUR RAINFALL, PATTERN NO. 1.00 WAS USED TO FIND TC & R FOR THIS BASIN
 705          KM   THIS BASIN USED RAINFALL REDUCTION FACTOR OF .999
 706          BA    .043
 707          LG    .150    .170   6.800    .134  38.180
 708          UC    .179    .126
 709          UA       0       5      16      30      65      77      84      90      94      97
 710          UA     100
```

```
LINE          ID.......1.......2.......3.......4.......5.......6.......7.......8.......9......10

 711          KK    LOG1
 712          KM   LOGAN WASH CONCENTRATION POINT 1 - SUB-BASINS 124A AND 124B
 713          HC       2

 714          KK   RLOG1
 715          KM   ROUTE LOG1 THROUGH 124D
 716          RS       1    FLOW       0
 717          RC     .04     .04     .04     647    .015
 718          RX    9920    9940    9965    9993   10008   10040   10057   10090
 719          RY    1670    1666    1660  1655.5  1655.5    1658    1662    1663

 720          KK    124D
 721          KM   SUB-BASIN 124D
 722          KM   6-HOUR RAINFALL, PATTERN NO. 1.00 WAS USED TO FIND TC & R FOR THIS BASIN
 723          KM   THIS BASIN USED RAINFALL REDUCTION FACTOR OF1.000
 724          BA    .009
 725          LG    .150    .230   6.200    .171  50.840
 726          UC    .213    .439
 727          UA       0       5      16      30      65      77      84      90      94      97
 728          UA     100

 729          KK   *LOG2
 730          KM   LOGAN WASH CONCENTRATION POINT *2 - (RLOG1, 124D)
 731          HC       2

 732          KK    124C
 733          KM   SUB-BASIN 124C
 734          KM   6-HOUR RAINFALL, PATTERN NO. 1.00 WAS USED TO FIND TC & R FOR THIS BASIN
 735          KM   THIS BASIN USED RAINFALL REDUCTION FACTOR OF1.000
 736          BA    .020
 737          LG    .150    .230   6.200    .171  43.540
 738          UC    .213    .278
 739          UA       0       5      16      30      65      77      84      90      94      97
 740          UA     100

 741          KK    LOG2
 742          KM   LOGAN WASH CONCENTRATION POINT 2 - (RLOG1, 124D),124C
 743          HC       2

 744          KK   RLOG2
 745          KM   ROUTE LOG2 THROUGH 124E TO CONFLUENCE WITH CEREUS WASH
 746          RS       3    FLOW       0
 747          RC     .04     .04     .04    1436    .014
 748          RX    9885    9920    9965   10005   10030   10060   10090   10140
 749          RY    1660    1650    1642    1640    1640    1650    1660    1670

 750          KK    124E
 751          KM   SUB-BASIN 124E
 752          KM   6-HOUR RAINFALL, PATTERN NO. 1.00 WAS USED TO FIND TC & R FOR THIS BASIN
 753          KM   THIS BASIN USED RAINFALL REDUCTION FACTOR OF .999
 754          BA    .051
 755          LG    .150    .210   6.400    .159  49.150
 756          UC    .217    .192
 757          UA       0       5      16      30      65      77      84      90      94      97
```

```
LINE          ID.......1.......2.......3.......4.......5.......6.......7.......8.......9......10

 758          UA     100

 759          KK    LOG3
 760          KM   LOGAN WASH CONCENTRATION POINT 3 - RLOG2, 124E
 761          HC       2

 762          KK    120J
 763          KM   SUB-BASIN 120J
 764          KM   6-HOUR RAINFALL, PATTERN NO. 1.00 WAS USED TO FIND TC & R FOR THIS BASIN
 765          KM   THIS BASIN USED RAINFALL REDUCTION FACTOR OF1.000
 766          BA    .006
 767          LG    .100    .250   5.700    .170  25.000
 768          UC    .225    .524
 769          UA       0       5      16      30      65      77      84      90      94      97
 770          UA     100

 771          KK   R120J
 772          KM   ROUTE 120J THROUGH 120K
 773          RS       1    FLOW       0
 774          RC     .04     .04     .04     624    .159
 775          RX    9840    9940    9985    9993   10005   10040   10047   10110
 776          RY    1710    1690    1685  1682.5  1682.5    1690    1692    1710

 777          KK    120K
 778          KM   SUB-BASIN 120K
 779          KM   6-HOUR RAINFALL, PATTERN NO. 1.00 WAS USED TO FIND TC & R FOR THIS BASIN
 780          KM   THIS BASIN USED RAINFALL REDUCTION FACTOR OF1.000
 781          BA    .034
 782          LG    .150    .250   5.700    .207  25.000
 783          UC    .237    .262
 784          UA       0       5      16      30      65      77      84      90      94      97
 785          UA     100

 786          KK   CER7A
 787          KM   CEREUS WASH CONCENTRATION POINT 7A- R120J AND 120K
 788          HC       2

 789          KK  SCER7A
 790          KM   ROUTE CER7A THROUGH 48" CULVERT UNDER SHEA BLVD.
 791          KO       3
 792          RS       1    ELEV  1640.9
 793          SQ       0      24      73     150     240
 794          SE  1640.9  1642.9  1644.9  1648.9    1658
 795          SA       0     .81
 796          SE  1640.9    1658

 797          KK  RCER7A
 798          KM   ROUTE CER7A THROUGH SUB-BASIN 120M TO CON. POINT CER6
 799          KM   48" PIPE FROM SHAE BLVD TO CEREUS WASH
 800          RK     627    .016    .038            CIRC       4
```

```
LINE          ID.......1.......2.......3.......4.......5.......6.......7.......8.......9......10

 801          KK    CER6
 802          KM   CEREUS WASH CONCENTRATION POINT 6 - (RCER5, 120G), RLOG2, RCER7A
 803          KM   CONFLUENCE OF LOGAN AND CEREUS WASH
 804          HC       3

 805          KK   RCER6
 806          KM   ROUTE CER6 THROUGH 120L
 807          RS       3    FLOW       0
 808          RC     .04     .04     .04    1481    .011
 809          RX    9945    9955    9970    9990   10020   10150   10180   10210
 810          RY    1628    1627    1626    1612    1612    1618    1624    1630

 811          KK    120L
 812          KM   SUB-BASIN 120L
 813          KM   6-HOUR RAINFALL, PATTERN NO. 1.00 WAS USED TO FIND TC & R FOR THIS BASIN
 814          KM   THIS BASIN USED RAINFALL REDUCTION FACTOR OF1.000
 815          BA    .032
 816          LG    .150    .150   7.000    .122  66.320
 817          UC    .204    .212
 818          UA       0       5      16      30      65      77      84      90      94      97
 819          UA     100

 820          KK   *CER7
 821          KM   CEREUS WASH PONCENTRATION POINT *7 - RCER6, 120L
 822          HC       2

 823          KK    120M
 824          KM   SUB-BASIN 120M
 825          KM   6-HOUR RAINFALL, PATTERN NO. 1.00 WAS USED TO FIND TC & R FOR THIS BASIN
 826          KM   THIS BASIN USED RAINFALL REDUCTION FACTOR OF1.000
 827          BA    .029
 828          LG    .100    .250   5.800    .186  43.850
 829          UC    .192    .237
 830          UA       0       5      16      30      65      77      84      90      94      97
 831          UA     100

 832          KK    123B
 833          KM   SUB-BASIN 123B
 834          KM   6-HOUR RAINFALL, PATTERN NO. 1.00 WAS USED TO FIND TC & R FOR THIS BASIN
 835          KM   THIS BASIN USED RAINFALL REDUCTION FACTOR OF1.000
 836          BA    .019
 837          LG    .150    .250   5.700    .207  25.000
 838          UC    .175    .174
 839          UA       0       5      16      30      65      77      84      90      94      97
 840          UA     100

 841          KK   S123B
 842          KM   ROUTE 123B THROUGH 36" CMP CULVERT UNDER SHEA BLVD
 843          KO       3
 844          RS       1    ELEV  1624.7
 845          SQ       0      11      33      63      77
 846          SE  1624.7  1626.2  1627.7  1630.7  1633.1
 847          SA       0   0.004    0.01
 848          SE  1624.7    1628    1629
```

```
LINE          ID.......1.......2.......3.......4.......5.......6.......7.......8.......9......10

 849          KK   R123B
 850          KM   ROUTE S123B THROUGH SUB-BASIN 120M TO LAKE SPILLWAY
 851          RS       2    FLOW       0
 852          RC    0.04    0.04    0.04     412   0.034
 853          RX    9965    9970    9980    9995   10005   10080  100115   10160
 854          RY    1630    1628    1623    1616    1616    1624    1628    1634
 855          RY    1640    1636    1632    1628    1628    1632    1634    1640

 856          KK   L27-1
 857          KM   EFLUENT LAKE 27-1
 858          BA   .0159
 859          LS            100
 860          UD    .027

 861          KK    LAKE
 862          KM   Conc. point LAKE combines L27-1,120M,R123B
 863          HC       3

 864          KK   SLAKE
 865          KM   ROUTE STORAGE ROUTING FOR THE LAKE
 866          RS       1    ELEV    1630
 867          SQ       0  0.0001      57     165     312     495
 868          SE    1630    1634  1634.5    1635  1635.5    1636
 869          SA   4.009   5.906   8.130   8.274   9.175   9.435   9.695   9.946  10.197
 870          SE    1610    1620    1626    1628    1630    1631    1632    1633    1634

 871          KK   RLAKE
 872          KM   ROUTE SPILLWAY FLOW THRUOGH BASIN 120L TO CONC. POINT CER7
 873          RS       2    FLOW       0
 874          RC     .04     .04     .04     700    .011
 875          RX    9945    9955    9970    9990   10020   10150   10180   10210
 876          RY    1628    1627    1626    1612    1612    1618    1624    1630

 877          KK    CER7
 878          KM   CEREUS WASH CONCENTRATION POINT 7 - (RCER6, 120L), 120M
 879          HC       2

 880          KK   RCER7
 881          KM   ROUTE CER7 THROUGH SUB-BASIN 120N
 882          RS       4    FLOW       0
 883          RC     .04     .04     .04    2006    .013
 884          RX    9860    9910    9945    9985   10010   10150   10180   10300
 885          RY    1597    1596    1594    1582    1582    1586    1590    1592

 886          KK    120N
 887          KM   SUB-BASIN 120N
 888          KM   6-HOUR RAINFALL, PATTERN NO. 1.00 WAS USED TO FIND TC & R FOR THIS BASIN
 889          KM   THIS BASIN USED RAINFALL REDUCTION FACTOR OF .999
 890          BA    .043
 891          LG    .136    .150   7.000    .117  69.710
 892          UC    .183    .185
 893          UA       0       5      16      30      65      77      84      90      94      97
 894          UA     100
```

```
LINE          ID.......1.......2.......3.......4.......5.......6.......7.......8.......9......10

  895         KK   *CER8
  896         KM   CEREUS WASH CONCENTRATION POINT *8 - RCER7, 120N
  897         HC       2

  898         KK    123A
  899         KM   SUB-BASIN 123A
  900         KM   6-HOUR RAINFALL, PATTERN NO. 1.00 WAS USED TO FIND TC & R FOR THIS BASIN
  901         KM   THIS BASIN USED RAINFALL REDUCTION FACTOR OF .999
  902         BA    .075
  903         LG    .150    .250   5.700    .207  25.000
  904         UC    .246    .205
  905         UA       0       5      16      30      65      77      84      90      94      97
  906         UA     100

  907         KK   S123A
  908         KM   ROUTE 123A THROUGH 2 60" CULVERT AT TRAVINO DRIVE
  909         KO       3
  910         RS       1    ELEV  1594.5
  911         SQ       0      74     130     360     444
  912         SE  1594.5    1597  1599.5    1602  1604.5
  913         SA       0    0.01    0.69
  914         SE  1594.5    1596    1604

  915         KK    123D
  916         KM   SUB-BASIN 123D
  917         KM   6-HOUR RAINFALL, PATTERN NO. 1.00 WAS USED TO FIND TC & R FOR THIS BASIN
  918         KM   THIS BASIN USED RAINFALL REDUCTION FACTOR OF1.000
  919         BA    .010
  920         LG    .100    .250   5.700    .189  25.000
  921         UC    .225    .469
  922         UA       0       5      16      30      65      77      84      90      94      97
  923         UA     100

  924         KK    TRV1
  925         KM   TREVINO WASH CONCENTRATION POINT 1 - S123A AND 123D
  926         HC       2

  927         KK   STRV1
  928         KM   ROUTE TRV1 THROUGH 84" CMP CULVERT UNDER SHEA BLVD
  929         KO       3
  930         RS       1    ELEV  1588.7
  931         SQ       0      97     300     435     620
  932         SE  1588.7  1591.7  1595.7  1602.7    1598
  933         SA       0    0.01    0.14
  934         SE  1588.7    1589    1598

  935         KK   RTRV1
  936         KM   ROUTE TRV1 THROUGH SUB-BASIN 120N TO *CER8
  937         RS       2    FLOW       0
  938         RC     .04     .04     .04     971    .007
  939         RX    9860    9910    9945    9985   10010   10150   10180   10300
  940         RY    1597    1596    1594    1582    1582    1586    1590    1592
```

S-Lake


```
LINE          ID.......1.......2.......3.......4.......5.......6.......7.......8.......9......10

 941          KK   123C
 942          KM   SUB-BASIN 123C
 943          KM   6-HOUR RAINFALL, PATTERN NO. 1.00 WAS USED TO FIND TC & R FOR THIS BASIN
 944          KM   THIS BASIN USED RAINFALL REDUCTION FACTOR OF1.000
 945          BA    .003
 946          LG    .150    .250   5.700    .207  25.000
 947          UC    .092    .085
 948          UA       0       5      16      30      65      77      84      90      94      97
 949          UA     100

 950          KK   S123C
 951          KM   ROUTE 123C THROUGH 24" CMP CULVERT UNDER SHEA BLVD
 952          KO       3
 953          RS       1    ELEV    1618
 954          SQ       0       4      12      22      28
 955          SE    1618    1619    1620    1622    1624
 956          SA       0    0.01
 957          SE    1618    1623

 958          KK   R123C
 959          KM   ROUTE R123C THROUGH SUB-BASIN 120N TO WASH
 960          RS       1    FLOW       0
 961          RC    0.04    0.04    0.04     136   0.147
 962          RX    9965    9970    9980    9995   10005   10080   10115   10160
 963          RY    1630    1628    1623    1616    1616    1624    1628    1634

 964          KK   R123C
 965          KM   ROUTE 123C THROUGH SUB-BASIN 120N (WASH) TO CON. POINT CER8
 966          RS       5    FLOW       0
 967          RC    0.04    0.04    0.04    1688   0.012
 968          RX    9860    9910    9945    9985   10010   10150   10180   10300
 969          RY    1597    1596    1594    1582    1582    1586    1590    1592

 970          KK    CER8
 971          KM   CEREUS WASH CONCENTRATION POINT 8 - (RCER7, 120N), R2TREV, 123C
 972          KM   CONFLUENCE WITH TREVINO WASH
 973          HC       3

 974          KK   RCER8
 975          KM   ROUTE CER8 THROUGH SUB-BASIN 120Q
 976          RS       3    FLOW       0
 977          RC     .04     .04     .04    1703    .013
 978          RX    9890    9920    9980    9999   10001   10055   10095   10180
 979          RY    1571    1570    1558    1556    1556    1560    1570    1574

 980          KK    1200
 981          KM   SUB-BASIN 1200
 982          KM   6-HOUR RAINFALL, PATTERN NO. 1.00 WAS USED TO FIND TC & R FOR THIS BASIN
 983          KM   THIS BASIN USED RAINFALL REDUCTION FACTOR OF1.000
 984          BA    .008
 985          LG    .100    .250   5.700    .189  25.000
 986          UC    .117    .104
 987          UA       0       5      16      30      65      77      84      90      94      97
 988          UA     100
```

```
LINE          ID.......1.......2.......3.......4.......5.......6.......7.......8.......9......10

 989          KK   S1200
 990          KM   ROUTE 1200 THROUGH 2 30" CMP CULVERT UNDER SHEA BLVD
 991          KO       3
 992          RS       1    ELEV    1587
 993          SQ       0      15      44      90     180     400
 994          SE    1585  1588.8  1590.6  1594.2    1595    1596
 995          SA       0    0.01    0.02
 996          SE    1587    1589    1594

 997          KK   R1200
 998          KM   ROUTE 1200 TO WASH THROUGH 120Q
 999          RS       1    FLOW       0
1000          RC     .04     .04     .04     572    .028
1001          RX    9860    9910    9945    9985   10010   10150   10180   10300
1002          RY    1597    1596    1594    1582    1582    1586    1590    1590

1003          KK   R1200
1004          KM   ROUTE 1200 THROUGH SUB-BASIN 120Q FROM WASH TO *CER9
1005          RS       3    FLOW       0
1006          RC     .04     .04     .04    1503    .013
1007          RX    9890    9920    9980    9999   10001   10055   10095   10180
1008          RY    1571    1570    1558    1556    1556    1560    1570    1574

1009          KK    120Q
1010          KM   SUB-BASIN 120Q
1011          KM   6-HOUR RAINFALL, PATTERN NO. 1.00 WAS USED TO FIND TC & R FOR THIS BASIN
1012          KM   THIS BASIN USED RAINFALL REDUCTION FACTOR OF1.000
1013          BA    .035
1014          LG    .138    .150   7.000    .118  68.920
1015          UC    .208    .215
1016          UA       0       5      16      30      65      77      84      90      94      97
1017          UA     100

1018          KK   *CER9
1019          KM   CEREUS WASH CONCENTRATION POINT *9 - RCER8, 120Q, R1200
1020          HC       3

1021          KK    120P
1022          KM   SUB-BASIN 120P
1023          KM   6-HOUR RAINFALL, PATTERN NO. 1.00 WAS USED TO FIND TC & R FOR THIS BASIN
1024          KM   THIS BASIN USED RAINFALL REDUCTION FACTOR OF1.000
1025          BA    .028
1026          LG    .150    .250   5.700    .198  25.000
1027          UC    .117    .051
1028          UA       0       5      16      30      65      77      84      90      94      97
1029          UA     100

1030          KK   S120P
1031          KM   ROUTE 120P THROUGH 36" CMP CULVERT UNDER SHEA BLVD
1032          KO       3
1033          RS       1    ELEV    1580
1034          SQ       0      11      35      70
1035          SE    1580  1581.5    1583    1586
1036          SA       0    0.02    0.25
```

```
LINE          ID.......1.......2.......3.......4.......5.......6.......7.......8.......9......10

1037          SE    1580    1990    1593

1038          KK   R120P
1039          KM   ROUTE 120P THROUGH SUB-BASIN 120Q
1040          RS       2    FLOW       0
1041          RC     .04     .04     .04    1168    .025
1042          RX    9890    9920    9980    9999   10001   10055   10095   10180
1043          RY    1571    1570    1558    1556    1556  1560.5    1570    1574

1044          KK    CER9
1045          KM   CEREUS WASH CONCENTRATION POINT 9 - (RCER8, 120Q), R120P
1046          HC       2

1047          KK   SCER9
1048          KM   ROUTE CER9 THROUGH 2 60" CMP CULVERTS UNDER SAGUARO BLVD
1049          KO       3
1050          RS       1    ELEV 1549.75
1051          SQ       0      74     230     444     540
1052          SE  5489.8  1552.3  1554.8  1559.8  1563.2
1053          SA       0    0.02    0.48    2.43
1054          SE  1549.8    1552    1556    1564

1055          KK    120R
1056          KM   SUB-BASIN 120R
1057          KM   6-HOUR RAINFALL, PATTERN NO. 1.00 WAS USED TO FIND TC & R FOR THIS BASIN
1058          KM   THIS BASIN USED RAINFALL REDUCTION FACTOR OF1.000
1059          BA    .012
1060          LG    .140    .250   6.000    .178  76.820
1061          UC    .200    .310
1062          UA       0       5      16      30      65      77      84      90      94      97
1063          UA     100

1064          KK    120S
1065          KM   SUB-BASIN 120S
1066          KM   6-HOUR RAINFALL, PATTERN NO. 1.00 WAS USED TO FIND TC & R FOR THIS BASIN
1067          KM   THIS BASIN USED RAINFALL REDUCTION FACTOR OF1.000
1068          BA    .007
1069          LG    .054    .150   8.000    .070  49.670
1070          UC    .162    .239
1071          UA       0       5      16      30      65      77      84      90      94      97
1072          UA     100

1073          KK   CER10
1074          KM   CEREUS WASH CONCENTRATION POINT 10- SCER9, 120R, 120S
1075          HC       3

1076          KK  RCER10
1077          KM   ROUTE CER10 THROUGH SUB-BASIN 120T
1078          RS       1    FLOW       0
1079          RC     .04     .04     .04     405     .01
1080          RX    9790    9815    9895    9965   10030   10065   10150   10220
1081          RY    1562    1560    1558    1546    1546    1558    1558    1562
```

```
LINE          ID.......1.......2.......3.......4.......5.......6.......7.......8.......9......10

1082          KK    120T
1083          KM   SUB-BASIN 120T
1084          KM   6-HOUR RAINFALL, PATTERN NO. 1.00 WAS USED TO FIND TC & R FOR THIS BASIN
1085          KM   THIS BASIN USED RAINFALL REDUCTION FACTOR OF1.000
1086          BA    .002
1087          LG    .150    .150   8.000    .085  80.750
1088          UC    .125    .201
1089          UA       0       5      16      30      65      77      84      90      94      97
1090          UA     100

1091          KK  *CER11
1092          KM   CEREUS WASH CONCENTRATION POINT *11 - RCER10, 120T
1093          HC       2

1094          KK    122C
1095          KM   SUB-BASIN 122C
1096          KM   6-HOUR RAINFALL, PATTERN NO. 1.00 WAS USED TO FIND TC & R FOR THIS BASIN
1097          KM   THIS BASIN USED RAINFALL REDUCTION FACTOR OF1.000
1098          BA    .014
1099          LG    .150    .250   6.000    .163  42.100
1100          UC    .158    .162
1101          UA       0       5      16      30      65      77      84      90      94      97
1102          UA     100

1103          KK   D122C
1104          KM   DIVERTION AT 122C INTO 122A
1105          DT  DO122C
1106          DI       0      10     100    1000
1107          DQ     0.5       5      50     500

1108          KK   R122C
1109          KM   ROUTE 122C THROUGH SUB-BASIN 122E TO CON. POINT LZR2B
1110          RS       2    FLOW       0
1111          RC    0.02    0.02    0.02    1000   0.032
1112          RX    9975    9980    9985    9986   10014   10015   10020   10025
1113          RY  1614.5  1614.5  1614.5    1614    1614  1614.5  1614.5  1614.5

1114          KK    122E
1115          KM   SUB-BASIN 122E
1116          KM   6-HOUR RAINFALL, PATTERN NO. 1.00 WAS USED TO FIND TC & R FOR THIS BASIN
1117          KM   THIS BASIN USED RAINFALL REDUCTION FACTOR OF1.000
1118          BA    .032
1119          LG    .144    .250   6.000    .168  57.930
1120          UC    .188    .169
1121          UA       0       5      16      30      65      77      84      90      94      97
1122          UA     100

1123          KK   LSR2B
1124          KM   LASER WASH CONSENTRATION POINT 2B - COMBINE RD122E, 122E
1125          HC       2
```

```
LINE          ID.......1.......2.......3.......4.......5.......6.......7.......8.......9......10

1126          KK  RLSR2B
1127          KM   ROUTE LASER WASH LSR2B THROUGH SUB-BASIN 120G TO CON. POINT LSR2
1128          RS       2    FLOW       0
1129          RC    0.02    0.02    0.02    1281   0.017
1130          RX    9780    9905    9955    9975   10015   10050   10060   10085
1131          RY    1600    1598    1596    1592    1590  1591.5    1592  1592.5

1132          KK    122D
1133          KM   SUB-BASIN 122D
1134          KM   6-HOUR RAINFALL, PATTERN NO. 1.00 WAS USED TO FIND TC & R FOR THIS BASIN
1135          KM   THIS BASIN USED RAINFALL REDUCTION FACTOR OF1.000
1136          BA    .032
1137          LG    .150    .250   6.000    .183  37.090
1138          UC    .192    .190
1139          UA       0       5      16      30      65      77      84      90      94      97
1140          UA     100

1141          KK   R122D
1142          KM   ROUTE 122D THROUGH SUB-BASIN 122G TO CON. POIT LSR2
1143          RS       2    FLOW       0
1144          RC    0.02    0.02    0.02     480   0.015
1145          RX    9780    9905    9955    9975   10015   10050   10060   10085
1146          RY    1600    1598    1596    1592    1590  1591.5    1592   10085

1147          KK    122F
1148          KM   SUB-BASIN 122F
1149          KM   6-HOUR RAINFALL, PATTERN NO. 1.00 WAS USED TO FIND TC & R FOR THIS BASIN
1150          KM   THIS BASIN USED RAINFALL REDUCTION FACTOR OF1.000
1151          BA    .010
1152          LG    .150    .230   6.200    .171  80.110
1153          UC    .196    .319
1154          UA       0       5      16      30      65      77      84      90      94      97
1155          UA     100

1156          KK   R122F
1157          KM   ROUTE 122F THROUGH SUB-BAASIN 122G TO CON. POINT LSR2
1158          RS       2    FLOW       0
1159          RC    0.02    0.02    0.02     430   0.032
1160          RX    9780    9905    9955    9975   10015   10050   10060   10085
1161          RY    1600    1598    1596    1592    1590  1591.5    1592  1592.5

1162          KK    122G
1163          KM   SUB-BASIN 122G
1164          KM   6-HOUR RAINFALL, PATTERN NO. 1.00 WAS USED TO FIND TC & R FOR THIS BASIN
1165          KM   THIS BASIN USED RAINFALL REDUCTION FACTOR OF1.000
1166          BA    .022
1167          LG    .100    .250   6.000    .158  75.000
1168          UC    .125    .124
1169          UA       0       5      16      30      65      77      84      90      94      97
1170          UA     100
```

```
LINE          ID.......1.......2.......3.......4.......5.......6.......7.......8.......9......10

1171          KK    LSR2
1172          KM   LASER DRAIN CONCENTRATION POINT 2 - RLSR2B, R122F, R122D, 122D
1173          HC       4

1174          KK   RLSR2
1175          KM   ROUTE LSR2 THROUGH SUB-BASIN 122I TO CON. POINT LSR3
1176          RS       2    FLOW       0
1177          RC    0.02    0.02    0.02     826   0.017
1178          RX    9790    9875    9895    9985   10015   10070   10130   10170
1179          RY    1576    1576  1574.5    1571  1570.5    1574    1576    1578

1180          KK    122A
1181          KM   SUB-BASIN 122A
1182          KM   6-HOUR RAINFALL, PATTERN NO. 1.00 WAS USED TO FIND TC & R FOR THIS BASIN
1183          KM   THIS BASIN USED RAINFALL REDUCTION FACTOR OF1.000
1184          BA    .020
1185          LG    .115    .250   6.000    .162  43.160
1186          UC    .208    .335
1187          UA       0       5      16      30      65      77      84      90      94      97
1188          UA     100

1189          KK   D122C
1190          KM   FLOW FROM DIVERSION OUT OF 122C INTO 122A
1191          DR  DO122C

1192          KK  RD122C
1193          KM   ROUTE D122C THROUGH SUB-BASIN 122A TO CON. POINT LSR1B
1194          RS       4    FLOW       0
1195          RC    0.02    0.02    0.02    2050   0.019
1196          RX    9956    9961    9966  9966.5 10033.5   10034   10039   10044
1197          RY  1606.5  1606.5  1606.5    1606    1606  1606.5  1606.5  1606.5

1198          KK   LSR1B
1199          KM   LASER WASH CONCENTRATION POINT 1B - COMBINE 122A, RD122C
1200          HC       2

1201          KK  RLSR1B
1202          KM   ROUTE LSR1B THROUGH SUB-BASIN 122B TO CON. POINT LSR1
1203          RS       2    FLOW       0
1204          RC     .04     .04     .04    1052    .019
1205          RX    9840    9870    9890    9930   10045   10105   10130   10170
1206          RY    1582    1582    1582    1578    1577    1582    1582    1582

1207          KK    122B
1208          KM   SUB-BASIN 122B
1209          KM   6-HOUR RAINFALL, PATTERN NO. 1.00 WAS USED TO FIND TC & R FOR THIS BASIN
1210          KM   THIS BASIN USED RAINFALL REDUCTION FACTOR OF1.000
1211          BA    .034
1212          LG    .110    .250   6.000    .162  77.600
1213          UC    .175    .148
1214          UA       0       5      16      30      65      77      84      90      94      97
1215          UA     100
```

```
LINE          ID.......1.......2.......3.......4.......5.......6.......7.......8.......9......10

1216          KK    LSR1
1217          KM   LASER DRAIN CONCENTRATION POINT 1 - R122A AND 122B
1218          HC       2

1219          KK   RLSR1
1220          KM   ROUTE LSR1 THROUGH SUB-BASIN 122H TO CON. POINT LSR3
1221          RS       2    FLOW       0
1222          RC    0.02    0.02    0.02     500   0.018
1223          RX    9885    9905    9935    9960   10030   10050   10110   10130
1224          RY  1574.5    1574    1570  1568.5  1568.5    1572    1572    1574

1225          KK    122H
1226          KM   SUB-BASIN 122H
1227          KM   6-HOUR RAINFALL, PATTERN NO. 1.00 WAS USED TO FIND TC & R FOR THIS BASIN
1228          KM   THIS BASIN USED RAINFALL REDUCTION FACTOR OF1.000
1229          BA    .006
1230          LG    .150    .250   6.000    .181  73.320
1231          UC    .129    .163
1232          UA       0       5      16      30      65      77      84      90      94      97
1233          UA     100

1234          KK    122I
1235          KM   SUB-BASIN 122I
1236          KM   6-HOUR RAINFALL, PATTERN NO. 1.00 WAS USED TO FIND TC & R FOR THIS BASIN
1237          KM   THIS BASIN USED RAINFALL REDUCTION FACTOR OF1.000
1238          BA    .007
1239          LG    .150    .250   6.000    .175  75.000
1240          UC    .171    .233
1241          UA       0       5      16      30      65      77      84      90      94      97
1242          UA     100

1243          KK    LSR3
1244          KM   LASER DRAIN CONCENTRATION POINT 3 - RLSR1,RLSR2,122H,122I
1245          HC       4

1246          KK   RLSR3
1247          KM   ROUTE LSR3 THROUGH SUB-BASIN 122J TO CON. POINT LSR4
1248          RS       2    FLOW       0
1249          RC    0.04    0.04    0.04     422   0.017
1250          RX    9835    9875    9890    9910   10045   10055   10070   10080
1251          RY    1570    1568    1564    1562    1562    1564    1566    1568

1252          KK    122J
1253          KM   SUB-BASIN 122J
1254          KM   6-HOUR RAINFALL, PATTERN NO. 1.00 WAS USED TO FIND TC & R FOR THIS BASIN
1255          KM   THIS BASIN USED RAINFALL REDUCTION FACTOR OF1.000
1256          BA    .025
1257          LG    .150    .250   6.000    .183  38.780
1258          UC    .208    .240
1259          UA       0       5      16      30      65      77      84      90      94      97
1260          UA     100
```

```
LINE          ID.......1.......2.......3.......4.......5.......6.......7.......8.......9......10

1261          KK    LSR4
1262          KM   LASER DRAIN CONCENTRATION POINT 4 - RLSR3 AND 122J
1263          HC       2

1264          KK    RLS4
1265          KM   ROUTE LSR4 THROUGH SUB-BASIN 122K TO CONFLUENCE WITH CEREUS WASH CER11
1266          RS       2    FLOW       0
1267          RC    0.04    0.04    0.04     666    0.02
1268          RX    9790    9815    9895    9965   10030   10065   10150   10220
1269          RY    1562    1560    1558    1546    1546    1556    1558    1562

1270          KK    122K
1271          KM   SUB-BASIN 122K
1272          KM   6-HOUR RAINFALL, PATTERN NO. 1.00 WAS USED TO FIND TC & R FOR THIS BASIN
1273          KM   THIS BASIN USED RAINFALL REDUCTION FACTOR OF1.000
1274          BA    .003
1275          LG    .134    .210   6.400    .152  56.900
1276          UC    .175    .372
1277          UA       0       5      16      30      65      77      84      90      94      97
1278          UA     100

1279          KK    LSR5
1280          KM   LASER CONCENTRATION POINT 5 - RLSR5, 122K
1281          HC       2

1282          KK   CER11
1283          KM   CEREUS WASH CONCENTRATION POINT 11 - (RCER10, 120T), (RLSR5, 122K)
1284          KM   CONFLUENCE OF CEREUS WASH AND LASER DRAIN
1285          HC       2

1286          KK  RCER11
1287          KM   ROUTE CER11 THROUGH SUB-BASIN 120U TO CON. POINT CER12
1288          KO       3
1289          RS       1    FLOW       0
1290          RC     .04     .04     .04     821    .012
1291          RX    9885    9920    9965    9995   10020   10070   10120   10270
1292          RY    1570    1560    1548    1540    1540    1550    1554    1556

1293          KK    120U
1294          KM   SUB-BASIN 120U
1295          KM   6-HOUR RAINFALL, PATTERN NO. 1.00 WAS USED TO FIND TC & R FOR THIS BASIN
1296          KM   THIS BASIN USED RAINFALL REDUCTION FACTOR OF1.000
1297          BA    .019
1298          LG    .128    .170   6.800    .128  63.010
1299          UC    .154    .151
1300          UA       0       5      16      30      65      77      84      90      94      97
1301          UA     100

1302          KK  *CER12
1303          KM   CEREUS WASH CONCENTRATION POINT *12 - RCER11, 120U
1304          HC       2
```

```
LINE          ID.......1.......2.......3.......4.......5.......6.......7.......8.......9......10

1305          KK    121A
1306          KM   SUB-BASIN 121A
1307          KM   6-HOUR RAINFALL, PATTERN NO. 1.00 WAS USED TO FIND TC & R FOR THIS BASIN
1308          KM   THIS BASIN USED RAINFALL REDUCTION FACTOR OF .999
1309          BA    .050
1310          LG    .150    .250   6.000    .175  15.000
1311          UC    .258    .273
1312          UA      0       5      16      30      65      77      84      90      94      97
1313          UA     100

1314          KK   R121A
1315          KM   ROUTE 121A THROUGH SUB-BASIN 121B TO CON. POINT CER12
1316          RS       2    FLOW       0
1317          RC    0.04    0.04    0.04     446   0.036
1318          RX    9870    9905    9925    9990   10010   10052   10065   10100
1319          RY    1552    1550    1548    1542    1542    1550    1552    1554

1320          KK    121B
1321          KM   SUB-BASIN 121B
1322          KM   6-HOUR RAINFALL, PATTERN NO. 1.00 WAS USED TO FIND TC & R FOR THIS BASIN
1323          KM   THIS BASIN USED RAINFALL REDUCTION FACTOR OF1.000
1324          BA    .020
1325          LG    .150    .250   6.000    .175  15.910
1326          UC    .225    .341
1327          UA      0       5      16      30      65      77      84      90      94      97
1328          UA     100

1329          KK    LTD1
1330          KM   LAST TRAIL CONCENTRATION POINT 1 - R121A, 121B
1331          HC       2

1332          KK   CER12
1333          KM   CEREUS WASH CONCENTRATION POINT 12 - (RCER11, 120U), (R121A, 121B)
1334          KM   CONFLUENCE WITH LAST TRAIL DRAIN
1335          HC       2

1336          KK  RCER13
1337          KM   ROUTE CER12 THROUGH SUB-BASIN 120V TO CON. POINT CER13
1338          RS       1    FLOW       0
1339          RC    0.04    0.04    0.04     317   0.006
1340          RX    9820    9900    9950    9995   10030   10075   10120   10150
1341          RY    1550    1548    1540    1532    1532    1542    1552    1556

1342          KK    120V
1343          KM   SUB-BASIN 120V
1344          KM   6-HOUR RAINFALL, PATTERN NO. 1.00 WAS USED TO FIND TC & R FOR THIS BASIN
1345          KM   THIS BASIN USED RAINFALL REDUCTION FACTOR OF1.000
1346          BA    .010
1347          LG    .150    .190   6.600    .146  19.820
1348          UC    .158    .182
1349          UA      0       5      16      30      65      77      84      90      94      97
1350          UA     100
```

```
LINE          ID.......1.......2.......3.......4.......5.......6.......7.......8.......9......10

1351          KK   CER13
1352          KM   CEREUS WASH CONCENTRATION POINT 13 - RCER12, 120V UPSTREAM OF SHEA BLVD
1353          HC       2

1354          KK  SCER13
1355          KM   ROUTE CER13 THROGH 3 12'X12' BOX CULVERTS UNDER SHEA BLVD
1356          KO       3
1357          RS       1    ELEV 1530.30
1358          SQ       0    1332    3780    6300
1359          SE  1530.3  1536.3  1542.3  1549.1
1360          SA       0   0.011    0.95    3.40    6.46
1361          SE  1530.3    1532    1536    1544    1548

1362          KK  RCER13
1363          KM   ROUTE SCER13 THROUGHT SUB-BASIN 120X TO CON. POINT CER14
1364          RS       2    FLOW       0
1365          RC    0.04    0.04    0.04     868   0.013
1366          RX    9785    9850    9875    9910   10090   10135   10200   10280
1367          RY    1539    1538    1536    1525    1524    1536    1537    1538

1368          KK    120X
1369          KM   SUB-BASIN 120X
1370          KM   6-HOUR RAINFALL, PATTERN NO. 1.00 WAS USED TO FIND TC & R FOR THIS BASIN
1371          KM   THIS BASIN USED RAINFALL REDUCTION FACTOR OF1.000
1372          BA    .016
1373          LG    .117    .150   7.600    .092  73.460
1374          UC    .133    .115
1375          UA       0       5      16      30      65      77      84      90      94      97
1376          UA     100

1377          KK  *CER14
1378          KM   CEREUS WASH CONCENTRATION POINT *14 - RCER13, 120X
1379          HC       2

1380          KK    120W
1381          KM   SUB-BASIN 120W
1382          KM   6-HOUR RAINFALL, PATTERN NO. 1.00 WAS USED TO FIND TC & R FOR THIS BASIN
1383          KM   THIS BASIN USED RAINFALL REDUCTION FACTOR OF1.000
1384          BA    .005
1385          LG    .147    .250   6.000    .181  16.710
1386          UC    .087    .067
1387          UA       0       5      16      30      65      77      84      90      94      97
1388          UA     100

1389          KK   S120W
1390          KM   ROUTE 120W THROUGH 2 30" CMP CULVERT UNDER SHEA BLVD
1391          KO       3
1392          RS       1    ELEV 1540.94
1393          SQ       0      28      60     100
1394          SE  1540.9  1542.8  1544.6  1548.2
1395          SA       0    0.06    0.46
1396          SE    1539    1540    1543
```

```
LINE          ID.......1.......2.......3.......4.......5.......6.......7.......8.......9......10

1397          KK   R120W
1398          KM   ROUTE S120W THROUGH SUB-BASIN 120X TO CON. POINT CER14
1399          RS       2    FLOW       0
1400          RC    0.04    0.04    0.04     500   0.042
1401          RX    9970    9985    9995    9998   10002   10015   10050   10065
1402          RY    1532    1530    1528  1527.5  1527.5    1530    1536    1538

1403          KK   CER14
1404          KM   CEREUS WASH POINT OF CONCENTRATION 13 - (SCER13,120X), R120W
1405          HC       2
1406          ZZ
```

SCHEMATIC DIAGRAM OF STREAM NETWORK

```
INPUT
 LINE     (V) ROUTING          (--->) DIVERSION OR PUMP FLOW

 NO.      (.) CONNECTOR        (<---) RETURN OF DIVERTED OR PUMPED FLOW

  13       120A
              .
              .
  28          .        120B
              .           .
              .           .
  37          .           .        160A
              .           .           V
              .           .           V
  46          .           .       R160A
              .           .           .
              .           .           .
  52       CER1.......................
              V
              V
  55      SCER1
              .
              .
  63          .        120C
              .           .
              .           .
  72       CER2............
              V
              V
  75      RCER2
              .
              .
  81          .        120D
              .           .
              .           .
  90      *CER3............
              .
              .
  93          .        120H
              .           V
              .           V
 102          .       R120H
              .           .
              .           .
 108          .           .        120I
              .           .           .
              .           .           .
 117          .       CER3A............
              .           V
              .           V
 120          .      SCER3A
              .           .
              .           .
 127       CER3............
              V
              V
 130      SCER3
              V
              V
 138      RCER3
              .
              .
 144          .        120E
              .           .
              .           .
 153      *CER4............
              .
              .
 156          .        126A
              .           V
```

```
                V
165           R126A
                .
171             .        126B
                .          .
                .          .
180           WW1.............
                V
                V
183           RWW1
                .
                .
189             .        126C
                .          V
                .          V
198             .       R126C
                .          .
                .          .
204             .          .        126D
                .          .          .
                .          .          .
213           WW3........................
                V
                V
216           RWW3
                .
                .
222             .        126E
                .          .
                .          .
231             .          .        126F
                .          .          .
                .          .          .
240             .        WW4.............
                .          V
                .          V
243             .       RWW4
                .          .
                .          .
249             .          .        126G
                .          .          .
                .          .          .
258             .          .          .        126H
                .          .          .          .
                .          .          .          .
267           WW5.......................................
                V
                V
270           RWW5
                .
                .
276             .        126I
                .          .
                .          .
285             .          .        126J
                .          .          V
                .          .          V
294             .          .       R126J
                .          .          .
                .          .          .
300           WW6........................
                V
                V
303           RWW6
                .
                .
309             .        126M
                .          .
                .          .
318           *WW7.............
                .
```

```
321                 126K
                     V
                     V
330                R126K
                     .
                     .
336                     .        126L
                     .           .
                     .           .
345            WW7.......................
                 V
                 V
348            SWW7
                 .
                 .
355                 127A
                     .
                     .
364                     .        127B
                     .           .
                     .           .
373                 CAP1............
                     V
                     V
376                L28-7
                     V
                     V
383                RCAP1
                     .
                     .
389                     .        127C1
                     .           V
                     .           V
398                     .        L28-8
                     .           V
                     .           V
405                     .        R127C1
                     .           .
                     .           .
411                     .           .        127C2
                     .           .           .
                     .           .           .
420                     .           .           .        127D
                     .           .           .           .
                     .           .           .           .
429                 CAP2.......................................
                     V
                     V
432                RCAP2
                     .
                     .
438                     .        127E
                     .           .
                     .           .
447                     .           .        127F
                     .           .           .
                     .           .           .
456                     .        CAP3............
                     .           V
                     .           V
459                     .        RCAP3
                     .           .
                     .           .
465                     .           .        127G
                     .           .           .
                     .           .           .
474                     .        CAP4............
                     .           V
                     .           V
477                     .        SCAP4
                     .           V
```

```
                                        V
485                                  R2CAP4
                                        .
                                        .
491                                     .        127I
                                        .          V
                                        .          V
500                                     .       L28-6
                                        .          .
                                        .          .
507                                  *CAP5............
                                        .
                                        .
510                                     .        127H
                                        .          .
                                        .          .
519                              CAP5.......................
                                     V
                                     V
522                              RCAP5
                                        .
                                        .
528                                     .       127J
                                        .          .
                                        .          .
537                              CAP6............
                                        .
                                        .
540                        WW8............
                              V
                              V
544                        RWW8
                              .
                              .
550                              126N
                                        .
                                        .
559                        WW9............
                              .
                              .
562                 CER4............
                       V
                       V
566                 RCER4
                       .
                       .
572                        120F
                              .
                              .
581                 *CER5............
                       .
                       .
584                        125A
                              .
                              .
593                              125B
                                        .
                                        .
602                        CHK1............
                              V
                              V
605                        RCHK1
                              .
                              .
611                              125C
                                     V
                                     V
620                              R125C
                                        .
                                        .
626                                     .       125D
                                        .          .
```

```
635          CHK2.......................
                V
                V
638         L28-3
                V
                V
646        R2CHK2
                .
                .
652                     125E
                          .
                          .
661          CHK3............
                .
                .
664      CER5............
            V
            V
668     RCER5
            .
            .
674          120G
                .
                .
683     *CER6............
            .
            .
686          124A
                V
                V
695         L28-2
                .
                .
702                     124B
                          .
                          .
711          LOG1............
                V
                V
714         RLOG1
                .
                .
720                     124D
                          .
                          .
729        *LOG2............
                .
                .
732                     124C
                          .
                          .
741          LOG2............
                V
                V
744         RLOG2
                .
                .
750                     124E
                          .
                          .
759          LOG3............
                .
                .
762                     120J
                          V
                          V
771                    R120J
                          .
                          .
777                                  120K
                                       .
```

```
786                 .           .           .           .
                    .           .       CER7A...........
                    .           .           V
                    .           .           V
789                 .           .       SCER7A
                    .           .           V
                    .           .           V
797                 .           .       RCER7A
                    .           .           .
                    .           .           .
801            CER6.......................
                  V
                  V
805           RCER6
                    .
                    .
811                 .       120L
                    .           .
                    .           .
820           *CER7............
                    .
                    .
823                 .       120M
                    .           .
                    .           .
832                 .           .       123B
                    .           .           V
                    .           .           V
841                 .           .       S123B
                    .           .           V
                    .           .           V
849                 .           .       R123B
                    .           .           .
                    .           .           .
856                 .           .           .       L27-1
                    .           .           .           .
                    .           .           .           .
861                 .       LAKE........................
                    .           V
                    .           V
864                 .       SLAKE
                    .           V
                    .           V
871                 .       RLAKE
                    .           .
                    .           .
877            CER7............
                  V
                  V
880           RCER7
                    .
                    .
886                 .       120N
                    .           .
                    .           .
895           *CER8............
                    .
                    .
898                 .       123A
                    .           V
                    .           V
907                 .       S123A
                    .           .
                    .           .
915                 .           .       123D
                    .           .           .
                    .           .           .
924                 .       TRV1............
                    .           V
                    .           V
927                 .       STRV1
                    .           V
```

```
                 .          V
935              .      RTRV1
                 .          .
                 .          .
941              .          .        123C
                 .          .           V
                 .          .           V
950              .          .       S123C
                 .          .           V
                 .          .           V
958              .          .       R123C
                 .          .           V
                 .          .           V
964              .          .       R123C
                 .          .           .
                 .          .           .
970          CER8.......................
                 V
                 V
974         RCER8
                 .
                 .
980              .       1200
                 .          V
                 .          V
989              .      S1200
                 .          V
                 .          V
997              .      R1200
                 .          V
                 .          V
1003             .      R1200
                 .          .
                 .          .
1009             .          .        120Q
                 .          .           .
                 .          .           .
1018        *CER9.......................
                 .
                 .
1021             .       120P
                 .          V
                 .          V
1030             .      S120P
                 .          V
                 .          V
1038             .      R120P
                 .          .
                 .          .
1044         CER9............
                 V
                 V
1047        SCER9
                 .
                 .
1055             .       120R
                 .          .
                 .          .
1064             .          .        120S
                 .          .           .
                 .          .           .
1073        CER10......................
                 V
                 V
1076       RCER10
                 .
                 .
1082             .       120T
                 .          .
                 .          .
1091       *CER11............
                 .
```

```
1094        122C
            .
1105        .-------> DO122C
1103      D122C
            V
            V
1108      R122C
            .
            .
1114        .       122E
            .         .
            .         .
1123      LSR2B............
            V
            V
1126     RLSR2B
            .
            .
1132        .       122D
            .         V
            .         V
1141        .      R122D
            .         .
            .         .
1147        .         .        122F
            .         .          V
            .         .          V
1156        .         .       R122F
            .         .          .
            .         .          .
1162        .         .          .        122G
            .         .          .          .
            .         .          .          .
1171      LSR2.................................
            V
            V
1174     RLSR2
            .
            .
1180        .       122A
            .         .
            .         .
1191        .         .          .<------- DO122C
1189        .         .       D122C
            .         .          V
            .         .          V
1192        .         .      RD122C
            .         .          .
            .         .          .
1198        .      LSR1B............
            .         V
            .         V
1201        .     RLSR1B
            .         .
            .         .
1207        .         .        122B
            .         .          .
            .         .          .
1216        .       LSR1............
            .         V
            .         V
1219        .      RLSR1
            .         .
            .         .
1225        .         .        122H
            .         .          .
            .         .          .
1234        .         .          .        122I
            .         .          .          .
            .         .          .          .
```

```
1243          .        LSR3.................................
              .          V
              .          V
1246          .       RLSR3
              .          .
              .          .
1252          .          .        122J
              .          .          .
              .          .          .
1261          .        LSR4............
              .          V
              .          V
1264          .        RLS4
              .          .
              .          .
1270          .          .        122K
              .          .          .
              .          .          .
1279          .        LSR5............
              .          .
              .          .
1282      CER11............
              V
              V
1286     RCER11
              .
              .
1293          .        120U
              .          .
              .          .
1302     *CER12............
              .
              .
1305          .        121A
              .          V
              .          V
1314          .       R121A
              .          .
              .          .
1320          .          .        121B
              .          .          .
              .          .          .
1329          .        LTD1............
              .          .
              .          .
1332      CER12............
              V
              V
1336     RCER13
              .
              .
1342          .        120V
              .          .
              .          .
1351      CER13............
              V
              V
1354     SCER13
              V
              V
1362     RCER13
              .
              .
1368          .        120X
              .          .
              .          .
1377     *CER14............
              .
              .
1380          .        120W
              .          V
              .          V
```

```
1389          .      S120W
              .          V
              .          V
1397          .      R120W
              .          .
              .          .
1403      CER14............
```

(***) RUNOFF ALSO COMPUTED AT THIS LOCATION

PEAK FLOW AND STAGE (END-OF-PERIOD) SUMMARY FOR MULTIPLE PLAN-RATIO ECONOMIC COMPUTATIONS
FLOWS IN CUBIC FEET PER SECOND, AREA IN SQUARE MILES
TIME TO PEAK IN HOURS

OPERATION	STATION	AREA	PLAN		RATIOS APPLIED TO FLOWS RATIO 1 1.00	RATIO 2 0.50
HYDROGRAPH AT	120A	0.02	1	FLOW	167.	84.
				TIME	3.33	3.33
HYDROGRAPH AT +	120B	0.05	1	FLOW	690.	345.
				TIME	3.33	3.33
HYDROGRAPH AT +	160A	0.01	1	FLOW	109.	55.
				TIME	3.27	3.27
ROUTED TO +	R160A	0.01	1	FLOW	107.	52.
				TIME	3.30	3.33
			** PEAK STAGES IN FEET **			
			1	STAGE	1792.22	1791.80
				TIME	3.30	3.33
3 COMBINED AT	CER1	0.08	1	FLOW	962.	481.
				TIME	3.33	3.33
ROUTED TO	SCER1	0.08	1	FLOW	348.	247.
				TIME	3.73	3.63
			** PEAK STAGES IN FEET **			
			1	STAGE	1778.05	1769.22
				TIME	3.73	3.63
HYDROGRAPH AT	120C	0.00	1	FLOW	74.	37.
				TIME	3.30	3.30
2 COMBINED AT	CER2	0.08	1	FLOW	369.	264.
				TIME	3.60	3.53
ROUTED TO +	RCER2	0.08	1	FLOW	369.	264.
				TIME	3.67	3.57
			** PEAK STAGES IN FEET **			
			1	STAGE	1708.24	1707.89
				TIME	3.67	3.57
HYDROGRAPH AT +	120D	0.07	1	FLOW	949.	475.
				TIME	3.33	3.33
2 COMBINED AT +	*CER3	0.15	1	FLOW	1263.	693.
				TIME	3.33	3.37
HYDROGRAPH AT	120H	0.00	1	FLOW	49.	25.
				TIME	3.33	3.33
ROUTED TO						

```
                R120H     0.00    1   FLOW          49.      25.
                                      TIME         3.33     3.33

                                  ** PEAK STAGES IN FEET **
                                  1   STAGE     1712.46  1712.23
                                      TIME         3.33     3.33

HYDROGRAPH AT
                 120I     0.01    1   FLOW          97.      49.
                                      TIME         3.30     3.30

 2 COMBINED AT
                CER3A     0.01    1   FLOW         144.      72.
                                      TIME         3.30     3.30

ROUTED TO
+               SCER3A    0.01    1   FLOW         143.      72.
                                      TIME         3.33     3.33

                                  ** PEAK STAGES IN FEET **
                                  1   STAGE     1701.88  1701.34
                                      TIME         3.33     3.33

2 COMBINED AT
+                CER3     0.16    1   FLOW        1406.     763.
                                      TIME         3.33     3.33

ROUTED TO
+               SCER3     0.16    1   FLOW         732.     577.
                                      TIME         3.73     3.57

                                  ** PEAK STAGES IN FEET **
                                  1   STAGE     1705.73  1700.57
                                      TIME         3.73     3.57

ROUTED TO
                RCER3     0.16    1   FLOW         732.     577.
                                      TIME         3.73     3.57

                                  ** PEAK STAGES IN FEET **
                                  1   STAGE     1673.69  1673.38
                                      TIME         3.73     3.57

HYDROGRAPH AT
                 120E     0.02    1   FLOW         184.      92.
                                      TIME         3.33     3.33

 2 COMBINED AT
                *CER4     0.18    1   FLOW         855.     649.
                                      TIME         3.57     3.53

HYDROGRAPH AT
+                126A     0.01    1   FLOW          99.      49.
                                      TIME         3.30     3.30

ROUTED TO
+               R126A     0.01    1   FLOW          97.      48.
                                      TIME         3.33     3.37

                                  ** PEAK STAGES IN FEET **
                                  1   STAGE     1922.39  1922.26
                                      TIME         3.33     3.37

HYDROGRAPH AT
+                126B     0.02    1   FLOW         237.     119.
                                      TIME         3.33     3.33

2 COMBINED AT
                 WW1     0.03    1   FLOW         334.     166.
                                      TIME         3.33     3.33

ROUTED TO
```

```
                    RWW1      0.03     1   FLOW        331.     162.
                                           TIME        3.37     3.37

                                      ** PEAK STAGES IN FEET **
                                      1   STAGE     1814.24  1813.82
                                           TIME        3.37     3.37

HYDROGRAPH AT
                    126C      0.14     1   FLOW       1336.     668.
                                           TIME        3.40     3.40

ROUTED TO
                   R126C      0.14     1   FLOW       1335.     664.
                                           TIME        3.43     3.43

                                      ** PEAK STAGES IN FEET **
                                      1   STAGE     1815.59  1814.71
                                           TIME        3.43     3.43

HYDROGRAPH AT
+                   126D      0.03     1   FLOW        390.     195.
                                           TIME        3.30     3.30

3 COMBINED AT
+                    WW3      0.20     1   FLOW       1965.     975.
                                           TIME        3.40     3.40

ROUTED TO
+                   RWW3      0.20     1   FLOW       1957.     976.
                                           TIME        3.43     3.43

                                      ** PEAK STAGES IN FEET **
                                      1   STAGE     1789.65  1788.57
                                           TIME        3.43     3.43

HYDROGRAPH AT
                    126E      0.09     1   FLOW       1252.     626.
                                           TIME        3.40     3.40

HYDROGRAPH AT
                    126F      0.05     1   FLOW        813.     406.
                                           TIME        3.37     3.37

2 COMBINED AT
                    WW4      0.15     1   FLOW       2051.    1025.
                                           TIME        3.37     3.37

ROUTED TO
                   RWW4      0.15     1   FLOW       2021.    1006.
                                           TIME        3.43     3.47

                                      ** PEAK STAGES IN FEET **
                                      1   STAGE     1801.09  1799.84
                                           TIME        3.43     3.47

HYDROGRAPH AT
+                   126G      0.14     1   FLOW       1517.     759.
                                           TIME        3.37     3.37

HYDROGRAPH AT
+                   126H      0.02     1   FLOW        277.     138.
                                           TIME        3.30     3.30

4 COMBINED AT
+                    WW5      0.50     1   FLOW       5646.    2813.
                                           TIME        3.43     3.43

ROUTED TO
                   RWW5      0.50     1   FLOW       5618.    2795.
                                           TIME        3.47     3.47

                                      ** PEAK STAGES IN FEET **
```

			1	STAGE	1763.08	1761.74
				TIME	3.47	3.47
HYDROGRAPH AT	126I	0.08	1	FLOW	1206.	603.
				TIME	3.33	3.33
HYDROGRAPH AT	126J	0.00	1	FLOW	23.	11.
				TIME	3.30	3.30
ROUTED TO	R126J	0.00	1	FLOW	23.	11.
				TIME	3.33	3.33
			** PEAK STAGES IN FEET **			
			1	STAGE	1758.03	1758.01
				TIME	3.33	3.33
3 COMBINED AT						
+	WW6	0.58	1	FLOW	6579.	3240.
				TIME	3.43	3.43
ROUTED TO						
+	RWW6	0.58	1	FLOW	6577.	3241.
				TIME	3.43	3.47
			** PEAK STAGES IN FEET **			
			1	STAGE	1725.42	1723.84
				TIME	3.43	3.47
HYDROGRAPH AT	126M	0.03	1	FLOW	314.	157.
				TIME	3.33	3.33
2 COMBINED AT						
	*WW7	0.61	1	FLOW	6844.	3365.
				TIME	3.43	3.47
HYDROGRAPH AT	126K	0.01	1	FLOW	145.	72.
				TIME	3.30	3.30
ROUTED TO	R126K	0.01	1	FLOW	142.	71.
				TIME	3.37	3.37
			** PEAK STAGES IN FEET **			
			1	STAGE	1720.45	1720.23
				TIME	3.37	3.37
HYDROGRAPH AT						
+	126L	0.02	1	FLOW	267.	133.
				TIME	3.33	3.33
3 COMBINED AT						
+	WW7	0.64	1	FLOW	7212.	3538.
				TIME	3.43	3.47
ROUTED TO						
+	SWW7	0.64	1	FLOW	4512.	2476.
				TIME	3.70	3.70
			** PEAK STAGES IN FEET **			
			1	STAGE	1766.92	1736.39
				TIME	3.70	3.70
HYDROGRAPH AT	127A	0.03	1	FLOW	365.	183.
				TIME	3.33	3.33
HYDROGRAPH AT						

```
                    127B      0.04    1   FLOW        585.     293.
                                          TIME        3.30     3.30

 2 COMBINED AT
                    CAP1      0.07    1   FLOW        946.     473.
                                          TIME        3.30     3.30

ROUTED TO
                    L28-7     0.07    1   FLOW        788.     281.
                                          TIME        3.40     3.53

                                     ** PEAK STAGES IN FEET **
                                     1   STAGE     1786.33  1785.18
                                          TIME        3.40     3.53

 ROUTED TO
                    RCAP1     0.07    1   FLOW        784.     278.
                                          TIME        3.43     3.57

                                     ** PEAK STAGES IN FEET **
                                     1   STAGE     1744.60  1743.56
                                          TIME        3.43     3.57

 HYDROGRAPH AT
+                   127C1     0.03    1   FLOW        423.     212.
                                          TIME        3.30     3.30

ROUTED TO
+                   L28-8     0.03    1   FLOW        348.     108.
                                          TIME        3.40     3.53

                                     ** PEAK STAGES IN FEET **
                                     1   STAGE     1770.88  1769.89
                                          TIME        3.40     3.53

ROUTED TO
                    R127C1    0.03    1   FLOW        348.     108.
                                          TIME        3.40     3.57

                                     ** PEAK STAGES IN FEET **
                                     1   STAGE     1733.69  1732.93
                                          TIME        3.40     3.57

HYDROGRAPH AT
                    127C2     0.01    1   FLOW        210.     105.
                                          TIME        3.30     3.30

 HYDROGRAPH AT
                    127D      0.02    1   FLOW        337.     169.
                                          TIME        3.30     3.30

  4 COMBINED AT
+                   CAP2      0.13    1   FLOW       1557.     532.
                                          TIME        3.40     3.53

 ROUTED TO
+                   RCAP2     0.13    1   FLOW       1545.     528.
                                          TIME        3.43     3.57

                                     ** PEAK STAGES IN FEET **
                                     1   STAGE     1735.97  1734.54
                                          TIME        3.43     3.57

HYDROGRAPH AT
+                   127E      0.10    1   FLOW       1320.     660.
                                          TIME        3.33     3.33

HYDROGRAPH AT
+                   127F      0.15    1   FLOW       1810.     905.
                                          TIME        3.37     3.37

 2 COMBINED AT
```

```
                    CAP3      0.25    1   FLOW        3113.    1557.
                                          TIME         3.33     3.33

ROUTED TO
                    RCAP3     0.25    1   FLOW        3121.    1555.
                                          TIME         3.37     3.37

                                      ** PEAK STAGES IN FEET **
                                      1   STAGE     1762.66  1761.16
                                          TIME         3.37     3.37

HYDROGRAPH AT
                    127G      0.06    1   FLOW         864.     432.
                                          TIME         3.30     3.30

 2 COMBINED AT
                    CAP4      0.31    1   FLOW        3914.    1951.
                                          TIME         3.37     3.37

ROUTED TO
+                   SCAP4     0.31    1   FLOW        1819.    1283.
                                          TIME         3.70     3.57

                                      ** PEAK STAGES IN FEET **
                                      1   STAGE     1780.09  1766.05
                                          TIME         3.70     3.57

ROUTED TO
+                   R2CAP4    0.31    1   FLOW        1818.    1283.
                                          TIME         3.70     3.60

                                      ** PEAK STAGES IN FEET **
                                      1   STAGE     1739.56  1738.99
                                          TIME         3.70     3.60

HYDROGRAPH AT
                    127I      0.01    1   FLOW         115.      58.
                                          TIME         3.30     3.30

ROUTED TO
                    L28-6     0.01    1   FLOW           0.       0.
                                          TIME         0.03     0.03

                                      ** PEAK STAGES IN FEET **
                                      1   STAGE     1748.67  1747.37
                                          TIME         6.63     6.63

 2 COMBINED AT
                    *CAP5     0.32    1   FLOW        1818.    1283.
                                          TIME         3.70     3.60

HYDROGRAPH AT
                    127H      0.02    1   FLOW         262.     131.
                                          TIME         3.30     3.30

 3 COMBINED AT
+                   CAP5      0.47    1   FLOW        3298.    1873.
                                          TIME         3.43     3.57

ROUTED TO
+                   RCAP5     0.47    1   FLOW        3295.    1867.
                                          TIME         3.47     3.60

                                      ** PEAK STAGES IN FEET **
                                      1   STAGE     1714.55  1713.50
                                          TIME         3.47     3.60

HYDROGRAPH AT
                    127J      0.03    1   FLOW         424.     212.
                                          TIME         3.33     3.33

 2 COMBINED AT
```

```
                    CAP6      0.50    1   FLOW        3617.    1986.
                                          TIME         3.47     3.57

 2 COMBINED AT
                    WW8       1.14    1   FLOW        7636.    4409.
                                          TIME         3.60     3.63

ROUTED TO
                    RWW8      1.14    1   FLOW        7621.    4402.
                                          TIME         3.67     3.67

                                      ** PEAK STAGES IN FEET **
                                      1   STAGE     1684.11  1682.93
                                          TIME         3.67     3.67

 HYDROGRAPH AT
+                   126N      0.08    1   FLOW         871.     436.
                                          TIME         3.37     3.37

  2 COMBINED AT
+                   WW9       1.22    1   FLOW        8175.    4658.
                                          TIME         3.63     3.67

  2 COMBINED AT
+                   CER4      1.40    1   FLOW        9024.    5285.
                                          TIME         3.63     3.67

ROUTED TO
+                   RCER4     1.40    1   FLOW        9026.    5285.
                                          TIME         3.63     3.67

                                      ** PEAK STAGES IN FEET **
                                      1   STAGE     1751.44  1749.59
                                          TIME         3.63     3.67

HYDROGRAPH AT
                    120F      0.02    1   FLOW         324.     162.
                                          TIME         3.30     3.30

 2 COMBINED AT
                    *CER5     1.42    1   FLOW        9146.    5338.
                                          TIME         3.63     3.67

HYDROGRAPH AT
                    125A      0.08    1   FLOW         835.     417.
                                          TIME         3.37     3.37

 HYDROGRAPH AT
                    125B      0.11    1   FLOW        1325.     663.
                                          TIME         3.37     3.37

  2 COMBINED AT
+                   CHK1      0.19    1   FLOW        2160.    1080.
                                          TIME         3.37     3.37

 ROUTED TO
+                   RCHK1     0.19    1   FLOW        2141.    1069.
                                          TIME         3.40     3.40

                                      ** PEAK STAGES IN FEET **
                                      1   STAGE     1687.11  1685.48
                                          TIME         3.40     3.40

HYDROGRAPH AT
+                   125C      0.03    1   FLOW         410.     205.
                                          TIME         3.33     3.33

ROUTED TO
                    R125C     0.03    1   FLOW         374.     177.
                                          TIME         3.40     3.40

                                      ** PEAK STAGES IN FEET **
```

```
                                        1   STAGE      1669.75  1668.47
                                            TIME          3.40     3.40

YDROGRAPH AT
                    125D      0.02      1   FLOW         145.       73.
                                            TIME          3.50     3.50

3 COMBINED AT
                    CHK2      0.24      1   FLOW        2650.     1314.
                                            TIME          3.40     3.40

ROUTED TO
                    L28-3     0.24      1   FLOW        1995.      601.
                                            TIME          3.60     3.83

                                        ** PEAK STAGES IN FEET **
                                        1   STAGE      1705.56  1704.55
                                            TIME          3.60     3.83

ROUTED TO
+                   R2CHK2    0.24      1   FLOW        1987.      593.
                                            TIME          3.63     3.90

                                        ** PEAK STAGES IN FEET **
                                        1   STAGE      1667.96  1666.77
                                            TIME          3.63     3.90

YDROGRAPH AT
+                   125E      0.05      1   FLOW         688.      344.
                                            TIME          3.30     3.30

2 COMBINED AT
+                   CHK3      0.28      1   FLOW        2275.      654.
                                            TIME          3.60     3.87

2 COMBINED AT
                    CER5      1.71      1   FLOW       11403.     5647.
                                            TIME          3.63     3.80

OUTED TO
                    RCER5     1.71      1   FLOW       11409.     5632.
                                            TIME          3.63     3.80

                                        ** PEAK STAGES IN FEET **
                                        1   STAGE      1636.37  1634.99
                                            TIME          3.63     3.80

HYDROGRAPH AT
                    120G      0.04      1   FLOW         512.      256.
                                            TIME          3.33     3.33

2 COMBINED AT
+                   *CER6     1.74      1   FLOW       11638.     5698.
                                            TIME          3.63     3.80

HYDROGRAPH AT
+                   124A      0.07      1   FLOW         847.      424.
                                            TIME          3.33     3.33

ROUTED TO
+                   L28-2     0.07      1   FLOW         652.      202.
                                            TIME          3.53     3.70

                                        ** PEAK STAGES IN FEET **
                                        1   STAGE      1722.03  1720.95
                                            TIME          3.53     3.70

YDROGRAPH AT
+                   124B      0.04      1   FLOW         710.      355.
                                            TIME          3.30     3.30

2 COMBINED AT
```

```
                    LOG1      0.11    1   FLOW        1019.     355.
                                          TIME         3.43     3.30

ROUTED TO
                    RLOG1     0.11    1   FLOW        1018.     347.
                                          TIME         3.47     3.30

                                      ** PEAK STAGES IN FEET **
                                      1   STAGE     1658.62  1657.41
                                          TIME         3.47     3.30

HYDROGRAPH AT
                    124D      0.01    1   FLOW          79.      40.
                                          TIME         3.37     3.37

  2 COMBINED AT
+                   *LOG2     0.12    1   FLOW        1092.     384.
                                          TIME         3.47     3.33

HYDROGRAPH AT
+                   124C      0.02    1   FLOW         230.     115.
                                          TIME         3.33     3.33

  2 COMBINED AT
+                   LOG2      0.14    1   FLOW        1289.     500.
                                          TIME         3.43     3.33

ROUTED TO
+                   RLOG2     0.14    1   FLOW        1282.     493.
                                          TIME         3.50     3.37

                                      ** PEAK STAGES IN FEET **
                                      1   STAGE     1642.94  1641.82
                                          TIME         3.50     3.37

HYDROGRAPH AT
                    124E      0.05    1   FLOW         704.     352.
                                          TIME         3.33     3.33

  2 COMBINED AT
                    LOG3      0.19    1   FLOW        1806.     837.
                                          TIME         3.43     3.33

HYDROGRAPH AT
                    120J      0.01    1   FLOW          46.      23.
                                          TIME         3.37     3.37

ROUTED TO
                    R120J     0.01    1   FLOW          46.      23.
                                          TIME         3.40     3.40

                                      ** PEAK STAGES IN FEET **
                                      1   STAGE     1682.67  1682.58
                                          TIME         3.40     3.40

HYDROGRAPH AT
+                   120K      0.03    1   FLOW         397.     199.
                                          TIME         3.33     3.33

  2 COMBINED AT
+                   CER7A     0.04    1   FLOW         442.     221.
                                          TIME         3.33     3.33

ROUTED TO
+                   SCER7A    0.04    1   FLOW         268.     169.
                                          TIME         3.63     3.53

                                      ** PEAK STAGES IN FEET **
                                      1   STAGE     1660.78  1650.80
                                          TIME         3.63     3.53

ROUTED TO
```

```
                    RCER7A      0.04    1   FLOW        267.     169.
                                            TIME        3.67     3.53

3 COMBINED AT
                    CER6        1.98    1   FLOW      13410.    6285.
                                            TIME        3.60     3.80

ROUTED TO
                    RCER6       1.98    1   FLOW      13395.    6268.
                                            TIME        3.63     3.83

                                        ** PEAK STAGES IN FEET **
                                        1   STAGE     1620.60  1618.32
                                            TIME        3.63     3.83

HYDROGRAPH AT
+                   120L        0.03    1   FLOW        426.     213.
                                            TIME        3.33     3.33

2 COMBINED AT
+                   *CER7       2.01    1   FLOW      13603.    6326.
                                            TIME        3.63     3.70

HYDROGRAPH AT
+                   120M        0.03    1   FLOW        364.     182.
                                            TIME        3.33     3.33

HYDROGRAPH AT
+                   123B        0.02    1   FLOW        277.     139.
                                            TIME        3.30     3.30

ROUTED TO
+                   S123B       0.02    1   FLOW        241.     122.
                                            TIME        3.37     3.37

                                        ** PEAK STAGES IN FEET **
                                        1   STAGE     1661.27  1640.88
                                            TIME        3.37     3.37

ROUTED TO
                    R123B       0.02    1   FLOW        241.     122.
                                            TIME        3.40     3.40

                                        ** PEAK STAGES IN FEET **
                                        1   STAGE     1629.41  1629.00
                                            TIME        3.40     3.40

HYDROGRAPH AT
                    L27-1       0.02    1   FLOW        332.     166.
                                            TIME        3.20     3.20

3 COMBINED AT
+                   LAKE        0.06    1   FLOW        781.     398.
                                            TIME        3.27     3.23

ROUTED TO
+                   SLAKE       0.06    1   FLOW         30.       0.
                                            TIME        4.53     0.03

                                        ** PEAK STAGES IN FEET **
                                        1   STAGE     1634.26  1632.33
                                            TIME        4.53     6.57

ROUTED TO
+                   RLAKE       0.06    1   FLOW         30.       0.
                                            TIME        4.60     0.03

                                        ** PEAK STAGES IN FEET **
                                        1   STAGE     1612.23  1612.00
                                            TIME        4.60     0.00

2 COMBINED AT
```

	CER7	2.07	1	FLOW	13603.	6326.
				TIME	3.63	3.70
ROUTED TO						
	RCER7	2.07	1	FLOW	13590.	6321.
				TIME	3.63	3.73
			** PEAK STAGES IN FEET **			
			1	STAGE	1589.35	1587.30
				TIME	3.63	3.73
HYDROGRAPH AT						
	120N	0.04	1	FLOW	615.	308.
				TIME	3.30	3.30
2 COMBINED AT						
	*CER8	2.12	1	FLOW	13847.	6412.
				TIME	3.63	3.73
HYDROGRAPH AT						
+	123A	0.08	1	FLOW	987.	494.
				TIME	3.33	3.33
ROUTED TO						
+	S123A	0.08	1	FLOW	712.	421.
				TIME	3.50	3.43
			** PEAK STAGES IN FEET **			
			1	STAGE	1612.49	1603.81
				TIME	3.50	3.43
HYDROGRAPH AT						
+	123D	0.01	1	FLOW	83.	42.
				TIME	3.37	3.37
2 COMBINED AT						
	TRV1	0.09	1	FLOW	789.	461.
				TIME	3.50	3.43
ROUTED TO						
	STRV1	0.09	1	FLOW	739.	435.
				TIME	3.63	3.53
			** PEAK STAGES IN FEET **			
			1	STAGE	1618.45	1602.72
				TIME	3.63	3.53
ROUTED TO						
	RTRV1	0.09	1	FLOW	736.	433.
				TIME	3.67	3.60
			** PEAK STAGES IN FEET **			
			1	STAGE	1584.47	1583.90
				TIME	3.67	3.60
HYDROGRAPH AT						
+	123C	0.00	1	FLOW	56.	28.
				TIME	3.23	3.23
ROUTED TO						
+	S123C	0.00	1	FLOW	53.	27.
				TIME	3.30	3.27
			** PEAK STAGES IN FEET **			
			1	STAGE	1632.32	1623.68
				TIME	3.30	3.27
ROUTED TO						
	R123C	0.00	1	FLOW	53.	27.
				TIME	3.30	3.27
			** PEAK STAGES IN FEET **			

```
                                  1   STAGE     1616.31  1616.16
                                      TIME         3.30     3.27

ROUTED TO
                R123C      0.00   1   FLOW         47.      24.
                                      TIME         3.43     3.43

                                  ** PEAK STAGES IN FEET **
                                  1   STAGE     1582.42  1582.21
                                      TIME         3.43     3.43

 3 COMBINED AT
                CER8       2.20   1   FLOW      14604.    6808.
                                      TIME         3.63     3.73

ROUTED TO
                RCER8      2.20   1   FLOW      14617.    6805.
                                      TIME         3.67     3.73

                                  ** PEAK STAGES IN FEET **
                                  1   STAGE     1566.47  1563.53
                                      TIME         3.67     3.73

HYDROGRAPH AT
+               1200       0.01   1   FLOW        143.      71.
                                      TIME         3.27     3.27

ROUTED TO
+               S1200      0.01   1   FLOW        142.      70.
                                      TIME         3.27     3.27

                                  ** PEAK STAGES IN FEET **
                                  1   STAGE     1594.66  1592.66
                                      TIME         3.27     3.27

ROUTED TO
                R1200      0.01   1   FLOW        138.      68.
                                      TIME         3.30     3.30

                                  ** PEAK STAGES IN FEET **
                                  1   STAGE     1582.79  1582.39
                                      TIME         3.30     3.30

ROUTED TO
                R1200      0.01   1   FLOW        127.      64.
                                      TIME         3.40     3.40

                                  ** PEAK STAGES IN FEET **
                                  1   STAGE     1557.52  1557.13
                                      TIME         3.40     3.40

HYDROGRAPH AT
                120Q       0.04   1   FLOW        463.     232.
                                      TIME         3.33     3.33

 3 COMBINED AT
+               *CER9      2.25   1   FLOW      14874.    6913.
                                      TIME         3.67     3.73

HYDROGRAPH AT
+               120P       0.03   1   FLOW        562.     281.
                                      TIME         3.23     3.23

ROUTED TO
+               S120P      0.03   1   FLOW        560.     280.
                                      TIME         3.23     3.23

                                  ** PEAK STAGES IN FEET **
                                  1   STAGE     1627.98  1603.98
                                      TIME         3.23     3.23

ROUTED TO
```

```
                R120P      0.03    1   FLOW        555.     278.
                                       TIME        3.27     3.27

                                   ** PEAK STAGES IN FEET **
                                   1   STAGE     1558.50  1557.95
                                       TIME        3.27     3.27

 2 COMBINED AT
                CER9       2.27    1   FLOW      14947.    6943.
                                       TIME        3.67     3.73

 ROUTED TO
                SCER9      2.27    1   FLOW        563.     563.
                                       TIME        5.50     5.07

                                   ** PEAK STAGES IN FEET **
                                   1   STAGE     1564.02  1564.01
                                       TIME        5.63     4.93

 HYDROGRAPH AT
+               120R       0.01    1   FLOW        132.      66.
                                       TIME        3.33     3.33

 HYDROGRAPH AT
+               120S       0.01    1   FLOW         90.      45.
                                       TIME        3.30     3.30

 3 COMBINED AT
+               CER10      2.29    1   FLOW        783.     673.
                                       TIME        3.33     3.33

 ROUTED TO
+               RCER10     2.29    1   FLOW        782.     676.
                                       TIME        3.33     3.33

                                   ** PEAK STAGES IN FEET **
                                   1   STAGE     1547.94  1547.79
                                       TIME        3.33     3.33

 HYDROGRAPH AT
                120T       0.00    1   FLOW         28.      14.
                                       TIME        3.30     3.30

 2 COMBINED AT
                *CER11     2.30    1   FLOW        809.     689.
                                       TIME        3.33     3.33

 HYDROGRAPH AT
                122C       0.01    1   FLOW        213.     106.
                                       TIME        3.30     3.30

 DIVERSION TO
+               DO122C     0.01    1   FLOW        106.      53.
                                       TIME        3.30     3.30

 HYDROGRAPH AT
+               D122C      0.01    1   FLOW        106.      53.
                                       TIME        3.30     3.30

 ROUTED TO
+               R122C      0.01    1   FLOW        105.      52.
                                       TIME        3.30     3.33

                                   ** PEAK STAGES IN FEET **
                                   1   STAGE     1614.47  1614.31
                                       TIME        3.30     3.33

 HYDROGRAPH AT
                122E       0.03    1   FLOW        473.     237.
                                       TIME        3.30     3.30

 2 COMBINED AT
```

```
                    LSR2B      0.05    1   FLOW        578.     288.
                                           TIME        3.30     3.30

ROUTED TO
                    RLSR2B     0.05    1   FLOW        573.     283.
                                           TIME        3.33     3.33

                                       ** PEAK STAGES IN FEET **
                                       1   STAGE     1591.69  1591.28
                                           TIME        3.33     3.33

HYDROGRAPH AT
                    122D       0.03    1   FLOW        446.     223.
                                           TIME        3.30     3.30

ROUTED TO
                    R122D      0.03    1   FLOW        445.     223.
                                           TIME        3.30     3.30

                                       ** PEAK STAGES IN FEET **
                                       1   STAGE     1590.00  1590.00
                                           TIME        3.30     3.30

HYDROGRAPH AT
+                   122F       0.01    1   FLOW        108.      54.
                                           TIME        3.33     3.33

ROUTED TO
+                   R122F      0.01    1   FLOW        108.      54.
                                           TIME        3.33     3.33

                                       ** PEAK STAGES IN FEET **
                                       1   STAGE     1590.75  1590.59
                                           TIME        3.33     3.33

HYDROGRAPH AT
                    122G       0.02    1   FLOW        375.     187.
                                           TIME        3.27     3.27

4 COMBINED AT
                    LSR2       0.11    1   FLOW       1472.     727.
                                           TIME        3.30     3.30

ROUTED TO
                    RLSR2      0.11    1   FLOW       1469.     728.
                                           TIME        3.33     3.33

                                       ** PEAK STAGES IN FEET **
                                       1   STAGE     1572.67  1572.12
                                           TIME        3.33     3.33

HYDROGRAPH AT
+                   122A       0.02    1   FLOW        207.     104.
                                           TIME        3.33     3.33

HYDROGRAPH AT
+                   D122C      0.00    1   FLOW        106.      53.
                                           TIME        3.30     3.30

ROUTED TO
+                   RD122C     0.00    1   FLOW        102.      50.
                                           TIME        3.37     3.40

                                       ** PEAK STAGES IN FEET **
                                       1   STAGE     1606.32  1606.21
                                           TIME        3.37     3.40

2 COMBINED AT
                    LSR1B      0.02    1   FLOW        309.     152.
                                           TIME        3.37     3.37

ROUTED TO
```

```
                    RLSR1B      0.02     1   FLOW        302.     145.
                                             TIME        3.40     3.47

                                     ** PEAK STAGES IN FEET **
                                     1   STAGE     1578.13  1577.86
                                             TIME        3.40     3.47

HYDROGRAPH AT
                    122B        0.03     1   FLOW        535.     267.
                                             TIME        3.30     3.30

 2 COMBINED AT
                    LSR1        0.05     1   FLOW        760.     358.
                                             TIME        3.33     3.33

ROUTED TO
                    RLSR1       0.05     1   FLOW        758.     358.
                                             TIME        3.33     3.33

                                     ** PEAK STAGES IN FEET **
                                     1   STAGE     1569.51  1569.15
                                             TIME        3.33     3.33

HYDROGRAPH AT
+                   122H        0.01     1   FLOW         92.      46.
                                             TIME        3.30     3.30

HYDROGRAPH AT
+                   122I        0.01     1   FLOW         90.      45.
                                             TIME        3.30     3.30

 4 COMBINED AT
+                   LSR3        0.18     1   FLOW       2402.    1174.
                                             TIME        3.33     3.33

ROUTED TO
                    RLSR3       0.18     1   FLOW       2401.    1166.
                                             TIME        3.33     3.33

                                     ** PEAK STAGES IN FEET **
                                     1   STAGE     1564.11  1563.38
                                             TIME        3.33     3.33

HYDROGRAPH AT
                    122J        0.03     1   FLOW        311.     155.
                                             TIME        3.33     3.33

 2 COMBINED AT
                    LSR4        0.20     1   FLOW       2712.    1321.
                                             TIME        3.33     3.33

ROUTED TO
+                   RLS4        0.20     1   FLOW       2695.    1322.
                                             TIME        3.37     3.37

                                     ** PEAK STAGES IN FEET **
                                     1   STAGE     1549.26  1548.14
                                             TIME        3.37     3.37

HYDROGRAPH AT
+                   122K        0.00     1   FLOW         30.      15.
                                             TIME        3.33     3.33

 2 COMBINED AT
+                   LSR5        0.21     1   FLOW       2724.    1337.
                                             TIME        3.37     3.37

 2 COMBINED AT
                    CER11       2.50     1   FLOW       3528.    2019.
                                             TIME        3.37     3.37

ROUTED TO
```

```
                RCER11      2.50    1   FLOW        3526.    2009.
                                        TIME         3.37     3.37

                                    ** PEAK STAGES IN FEET **
                                    1   STAGE     1546.37  1544.83
                                        TIME         3.37     3.37

YDROGRAPH AT
                120U        0.02    1   FLOW         298.     149.
                                        TIME         3.30     3.30

2 COMBINED AT
                *CER12      2.52    1   FLOW        3777.    2135.
                                        TIME         3.37     3.37

HYDROGRAPH AT
                121A        0.05    1   FLOW         564.     282.
                                        TIME         3.37     3.37

ROUTED TO
+               R121A       0.05    1   FLOW         566.     283.
                                        TIME         3.37     3.37

                                    ** PEAK STAGES IN FEET **
                                    1   STAGE     1543.89  1543.31
                                        TIME         3.37     3.37

YDROGRAPH AT
+               121B        0.02    1   FLOW         202.     101.
                                        TIME         3.37     3.37

2 COMBINED AT
+               LTD1        0.07    1   FLOW         768.     384.
                                        TIME         3.37     3.37

2 COMBINED AT
                CER12       2.59    1   FLOW        4545.    2518.
                                        TIME         3.37     3.37

OUTED TO
                RCER13      2.59    1   FLOW        4536.    2502.
                                        TIME         3.37     3.37

                                    ** PEAK STAGES IN FEET **
                                    1   STAGE     1539.49  1537.56
                                        TIME         3.37     3.37

HYDROGRAPH AT
                120V        0.01    1   FLOW         145.      72.
                                        TIME         3.30     3.30

2 COMBINED AT
                CER13       2.60    1   FLOW        4664.    2566.
                                        TIME         3.37     3.37

ROUTED TO
+               SCER13      2.60    1   FLOW        4289.    2453.
                                        TIME         3.43     3.43

                                    ** PEAK STAGES IN FEET **
                                    1   STAGE     1543.67  1539.05
                                        TIME         3.43     3.43

ROUTED TO
+               RCER13      2.60    1   FLOW        4290.    2447.
                                        TIME         3.47     3.47

                                    ** PEAK STAGES IN FEET **
                                    1   STAGE     1527.27  1526.48
                                        TIME         3.47     3.47

HYDROGRAPH AT
```

```
                    120X      0.02     1   FLOW        279.     140.
                                           TIME        3.27     3.27

2 COMBINED AT
                   *CER14     2.62     1   FLOW       4421.    2513.
                                           TIME        3.47     3.47

YDROGRAPH AT
                    120W      0.00     1   FLOW         98.      49.
                                           TIME        3.23     3.23

ROUTED TO
                   S120W      0.00     1   FLOW         50.      30.
                                           TIME        3.37     3.33

                                       ** PEAK STAGES IN FEET **
                                       1   STAGE    1544.02  1542.91
                                           TIME        3.37     3.33

 ROUTED TO
+                  R120W      0.00     1   FLOW         49.      30.
                                           TIME        3.37     3.37

                                       ** PEAK STAGES IN FEET **
                                       1   STAGE    1528.40  1528.20
                                           TIME        3.37     3.37

2 COMBINED AT
+                   CER14     2.62     1   FLOW       4469.    2540.
                                           TIME        3.47     3.47


*** NORMAL END OF HEC-1 ***
```

APPENDIX F.2

HEC-1 OUTPUT FOR 100-YEAR, 24 HOUR STORM

```
*****************************************
*                                       *
*   FLOOD HYDROGRAPH PACKAGE  (HEC-1)   *
*             MAY   1991                *
*          VERSION 4.0.1E               *
*                                       *
*  RUN DATE  12/01/94  TIME  17:35:45   *
*                                       *
*****************************************
```

```
*****************************************
*                                       *
*    U.S. ARMY CORPS OF ENGINEERS       *
*    HYDROLOGIC ENGINEERING CENTER      *
*          609 SECOND STREET            *
*       DAVIS, CALIFORNIA 95616         *
*          (916) 551-1748               *
*                                       *
*****************************************
```

```
X     X  XXXXXXX   XXXXX          X
X     X  X        X     X        XX
X     X  X        X               X
XXXXXXX  XXXX     X        XXXXX  X
X     X  X        X               X
X     X  X        X     X         X
X     X  XXXXXXX   XXXXX         XXX
```

THIS PROGRAM REPLACES ALL PREVIOUS VERSIONS OF HEC-1 KNOWN AS HEC1 (JAN 73), HEC1GS, HEC1DB, AND HEC1KW.

THE DEFINITIONS OF VARIABLES -RTIMP- AND -RTIOR- HAVE CHANGED FROM THOSE USED WITH THE 1973-STYLE INPUT STRUCTURE.
THE DEFINITION OF -AMSKK- ON RM-CARD WAS CHANGED WITH REVISIONS DATED 28 SEP 81. THIS IS THE FORTRAN77 VERSION
NEW OPTIONS: DAMBREAK OUTFLOW SUBMERGENCE , SINGLE EVENT DAMAGE CALCULATION, DSS:WRITE STAGE FREQUENCY,
DSS:READ TIME SERIES AT DESIRED CALCULATION INTERVAL LOSS RATE:GREEN AND AMPT INFILTRATION
KINEMATIC WAVE: NEW FINITE DIFFERENCE ALGORITHM

```
LINE          ID.......1.......2.......3.......4.......5.......6.......7.......8.......9......10

  1           ID   Fountain Hills efluent lake study
  2           ID   Prepared for Anderson-Nelson, Inc.
  3           ID
  4           ID   Cereus Wash
  5           ID   100-Yr 24-Hr Storm
  6           ID   Developed conditions with    lakes
  7           ID   2 minutes time interval
  8           ID
  9           ID   AGK Engineers (HAA) Nov 17, 1994
 10           ID
              *DIAGRAM
 11           ID
 12           IT      2                    800
 13           IO      5
 14           IN     30
 15           JD   4.40    0.01
 16           PC    .000    .005    .011    .016    .022    .028    .035    .041    .048    .056
 17           PC    .063    .071    .080    .089    .098    .109    .120    .133    .147    .163
 18           PC    .181    .204    .235    .283    .663    .735    .772    .799    .820    .838
 19           PC    .854    .868    .880    .891    .902    .912    .921    .929    .937    .945
 20           PC    .952    .959    .965    .972    .978    .984    .989    .995   1.000
 21           JD   4.40    1.00

 22           KK    120A
 23           KM   SUB-BASIN 120A
 24           KM   6-HOUR RAINFALL, PATTERN NO. 1.00 WAS USED TO FIND TC & R FOR THIS BASIN
 25           KM   THIS BASIN USED RAINFALL REDUCTION FACTOR OF1.000
 26           BA    .016
 27           LG    .100    .250   5.700    .170  45.000
 28           UC    .183    .336
 29           UA      0       5      16      30      65      77      84      90      94      97
 30           UA     100

 31           KK    120B
 32           KM   SUB-BASIN 120B
 33           KM   6-HOUR RAINFALL, PATTERN NO. 1.00 WAS USED TO FIND TC & R FOR THIS BASIN
 34           KM   THIS BASIN USED RAINFALL REDUCTION FACTOR OF .999
 35           BA    .053
 36           LG    .150    .250   5.700    .207  45.000
 37           UC    .233    .215
 38           UA      0       5      16      30      65      77      84      90      94      97
 39           UA     100

 40           KK    160A
 41           KM   SUB-BASIN 160A
 42           KM   6-HOUR RAINFALL, PATTERN NO. 1.00 WAS USED TO FIND TC & R FOR THIS BASIN
 43           KM   THIS BASIN USED RAINFALL REDUCTION FACTOR OF1.000
 44           BA    .006
 45           LG    .100    .250   5.700    .170  45.000
 46           UC    .096    .099
 47           UA      0       5      16      30      65      77      84      90      94      97
 48           UA     100
```

RUNOFF SUMMARY
FLOW IN CUBIC FEET PER SECOND
TIME IN HOURS, AREA IN SQUARE MILES

OPERATION	STATION	PEAK FLOW	TIME OF PEAK	AVERAGE FLOW FOR MAXIMUM PERIOD 6-HOUR	24-HOUR	72-HOUR	BASIN AREA	MAXIMUM STAGE	TIME OF MAX STAGE
HYDROGRAPH AT	120A	24.	12.03	4.	1.	1.	0.02		
HYDROGRAPH AT	120B	92.	12.03	13.	4.	4.	0.05		
HYDROGRAPH AT	160A	12.	12.00	1.	0.	0.	0.01		
ROUTED TO	R160A	12.	12.03	1.	0.	0.	0.01		
3 COMBINED AT	CER1	129.	12.03	18.	6.	5.	0.08		
ROUTED TO	SCER1	117.	12.13	18.	6.	5.	0.08		
HYDROGRAPH AT	120C	9.	12.00	1.	0.	0.	0.00		
2 COMBINED AT	CER2	124.	12.07	19.	6.	5.	0.08		
ROUTED TO	RCER2	123.	12.17	19.	6.	5.	0.08		
HYDROGRAPH AT	120D	121.	12.03	14.	4.	4.	0.07		
2 COMBINED AT	*CER3	233.	12.07	34.	10.	9.	0.15		
HYDROGRAPH AT	120H	7.	12.03	1.	0.	0.	0.00		
ROUTED TO	R120H	7.	12.07	1.	0.	0.	0.00		
HYDROGRAPH AT	120I	12.	12.03	1.	0.	0.	0.01		
2 COMBINED AT	CER3A	19.	12.03	3.	1.	1.	0.01		
ROUTED TO	SCER3A	17.	12.10	2.	1.	1.	0.01		
2 COMBINED AT	CER3	250.	12.07	36.	11.	10.	0.16		
ROUTED TO	SCER3	246.	12.10	36.	11.	10.	0.16		
ROUTED TO	RCER3	245.	12.13	36.	11.	10.	0.16		
HYDROGRAPH AT	120E	26.	12.07	4.	1.	1.	0.02		
2 COMBINED AT	*CER4	269.	12.13	40.	12.	11.	0.18		

HYDROGRAPH AT	126A	13.	12.03	2.	1.	0.	0.01
ROUTED TO	R126A	12.	12.10	2.	1.	0.	0.01
HYDROGRAPH AT	126B	34.	12.03	5.	2.	1.	0.02
2 COMBINED AT	WW1	46.	12.07	7.	2.	2.	0.03
ROUTED TO	RWW1	45.	12.07	7.	2.	2.	0.03
HYDROGRAPH AT	126C	188.	12.10	26.	7.	7.	0.14
ROUTED TO	R126C	184.	12.17	26.	7.	7.	0.14
HYDROGRAPH AT	126D	49.	12.03	6.	2.	1.	0.03
3 COMBINED AT	WW3	267.	12.10	39.	11.	10.	0.20
ROUTED TO	RWW3	267.	12.13	39.	11.	10.	0.20
HYDROGRAPH AT	126E	156.	12.10	19.	5.	5.	0.09
HYDROGRAPH AT	126F	101.	12.07	13.	4.	3.	0.05
2 COMBINED AT	WW4	257.	12.10	31.	9.	8.	0.15
ROUTED TO	RWW4	254.	12.17	31.	9.	8.	0.15
HYDROGRAPH AT	126G	216.	12.07	30.	9.	8.	0.14
HYDROGRAPH AT	126H	35.	12.03	4.	1.	1.	0.02
4 COMBINED AT	WW5	755.	12.10	105.	30.	27.	0.50
ROUTED TO	RWW5	748.	12.17	105.	30.	27.	0.50
HYDROGRAPH AT	126I	155.	12.03	20.	6.	5.	0.08
HYDROGRAPH AT	126J	3.	12.03	0.	0.	0.	0.00
ROUTED TO	R126J	3.	12.07	0.	0.	0.	0.00
3 COMBINED AT	WW6	870.	12.13	125.	36.	33.	0.58
ROUTED TO	RWW6	867.	12.17	125.	36.	33.	0.58
HYDROGRAPH AT	126M	42.	12.03	5.	2.	1.	0.03

2 COMBINED AT	*WW7	900.	12.13	130.	38.	34.	0.61
HYDROGRAPH AT	126K	20.	12.03	3.	1.	1.	0.01
ROUTED TO	R126K	20.	12.07	3.	1.	1.	0.01
HYDROGRAPH AT	126L	38.	12.07	6.	2.	2.	0.02
3 COMBINED AT	WW7	953.	12.13	139.	41.	37.	0.64
ROUTED TO	SWW7	937.	12.20	139.	41.	37.	0.64
HYDROGRAPH AT	127A	47.	12.03	6.	2.	1.	0.03
HYDROGRAPH AT	127B	71.	12.03	8.	2.	2.	0.04
2 COMBINED AT	CAP1	118.	12.03	13.	4.	3.	0.07
ROUTED TO	L28-7	0.	0.03	0.	0.	0.	0.07
ROUTED TO	RCAP1	0.	0.03	0.	0.	0.	0.07
HYDROGRAPH AT	127C1	54.	12.03	7.	2.	2.	0.03
ROUTED TO	L28-8	0.	24.10	0.	0.	0.	0.03
ROUTED TO	R127C1	0.	24.10	0.	0.	0.	0.03
HYDROGRAPH AT	127C2	27.	12.00	3.	1.	1.	0.01
HYDROGRAPH AT	127D	42.	12.03	5.	1.	1.	0.02
4 COMBINED AT	CAP2	68.	12.03	8.	2.	2.	0.13
ROUTED TO	RCAP2	68.	12.03	8.	2.	2.	0.13
HYDROGRAPH AT	127E	180.	12.03	24.	7.	6.	0.10
HYDROGRAPH AT	127F	256.	12.07	37.	11.	10.	0.15
2 COMBINED AT	CAP3	435.	12.07	61.	18.	16.	0.25
ROUTED TO	RCAP3	433.	12.07	61.	18.	16.	0.25
HYDROGRAPH AT	127G	111.	12.03	15.	5.	4.	0.06
2 COMBINED AT	CAP4	540.	12.07	76.	23.	21.	0.31

ROUTED TO	SCAP4	540.	12.07	76.	23.	21.	0.31
ROUTED TO	R2CAP4	536.	12.10	76.	23.	21.	0.31
HYDROGRAPH AT	127I	17.	12.03	3.	1.	1.	0.01
ROUTED TO	L28-6	0.	0.03	0.	0.	0.	0.01
2 COMBINED AT	*CAP5	536.	12.10	76.	23.	21.	0.32
HYDROGRAPH AT	127H	34.	12.03	5.	1.	1.	0.02
3 COMBINED AT	CAP5	635.	12.07	88.	27.	24.	0.47
ROUTED TO	RCAP5	627.	12.10	88.	26.	24.	0.47
HYDROGRAPH AT	127J	58.	12.03	8.	2.	2.	0.03
2 COMBINED AT	CAP6	681.	12.10	96.	29.	26.	0.50
2 COMBINED AT	WW8	1591.	12.13	235.	69.	63.	1.14
ROUTED TO	RWW8	1574.	12.23	235.	69.	63.	1.14
HYDROGRAPH AT	126N	122.	12.07	17.	5.	4.	0.08
2 COMBINED AT	WW9	1663.	12.23	252.	74.	67.	1.22
2 COMBINED AT	CER4	1913.	12.20	291.	86.	78.	1.40
ROUTED TO	RCER4	1909.	12.23	291.	86.	78.	1.40
HYDROGRAPH AT	120F	40.	12.03	5.	2.	1.	0.02
2 COMBINED AT	*CER5	1928.	12.23	296.	88.	79.	1.42
HYDROGRAPH AT	125A	125.	12.07	20.	6.	5.	0.08
HYDROGRAPH AT	125B	193.	12.07	29.	9.	8.	0.11
2 COMBINED AT	CHK1	317.	12.07	49.	15.	13.	0.19
ROUTED TO	RCHK1	314.	12.10	49.	15.	13.	0.19
HYDROGRAPH AT	125C	56.	12.03	8.	2.	2.	0.03
ROUTED TO	R125C	49.	12.10	8.	2.	2.	0.03

HYDROGRAPH AT	125D	25.	12.17	6.	2.	2.	0.02
3 COMBINED AT	CHK2	386.	12.10	63.	19.	17.	0.24
ROUTED TO	L28-3	0.	23.07	0.	0.	0.	0.24
ROUTED TO	R2CHK2	0.	24.30	0.	0.	0.	0.24
HYDROGRAPH AT	125E	88.	12.03	11.	4.	3.	0.05
2 COMBINED AT	CHK3	88.	12.03	11.	4.	3.	0.28
2 COMBINED AT	CER5	1973.	12.23	308.	91.	82.	1.71
ROUTED TO	RCER5	1967.	12.27	308.	91.	82.	1.71
HYDROGRAPH AT	120G	68.	12.03	9.	3.	3.	0.04
2 COMBINED AT	*CER6	2001.	12.27	317.	94.	85.	1.74
HYDROGRAPH AT	124A	123.	12.07	19.	6.	5.	0.07
ROUTED TO	L28-2	0.	0.03	0.	0.	0.	0.07
HYDROGRAPH AT	124B	85.	12.00	11.	3.	3.	0.04
2 COMBINED AT	LOG1	85.	12.00	11.	3.	3.	0.11
ROUTED TO	RLOG1	85.	12.03	11.	3.	3.	0.11
HYDROGRAPH AT	124D	12.	12.07	2.	1.	1.	0.01
2 COMBINED AT	*LOG2	97.	12.03	13.	4.	4.	0.12
HYDROGRAPH AT	124C	33.	12.03	5.	2.	1.	0.02
2 COMBINED AT	LOG2	129.	12.03	18.	5.	5.	0.14
ROUTED TO	RLOG2	127.	12.10	18.	5.	5.	0.14
HYDROGRAPH AT	124E	94.	12.03	13.	4.	4.	0.05
2 COMBINED AT	LOG3	218.	12.07	31.	10.	9.	0.19
HYDROGRAPH AT	120J	7.	12.07	1.	0.	0.	0.01
ROUTED TO	R120J	7.	12.10	1.	0.	0.	0.01

HYDROGRAPH AT	120K	54.	12.07	7.	2.	2.	0.03
2 COMBINED AT	CER7A	61.	12.07	8.	2.	2.	0.04
ROUTED TO	SCER7A	61.	12.07	8.	2.	2.	0.04
ROUTED TO	RCER7A	60.	12.07	8.	2.	2.	0.04
3 COMBINED AT	CER6	2203.	12.23	356.	106.	96.	1.98
ROUTED TO	RCER6	2198.	12.27	356.	106.	96.	1.98
HYDROGRAPH AT	120L	60.	12.03	9.	3.	3.	0.03
2 COMBINED AT	*CER7	2231.	12.27	365.	109.	98.	2.01
HYDROGRAPH AT	120M	50.	12.03	7.	2.	2.	0.03
HYDROGRAPH AT	123B	34.	12.03	4.	1.	1.	0.02
ROUTED TO	S123B	34.	12.03	4.	1.	1.	0.02
ROUTED TO	R123B	34.	12.03	4.	1.	1.	0.02
HYDROGRAPH AT	L27-1	34.	11.70	5.	2.	2.	0.02
3 COMBINED AT	LAKE	117.	12.00	16.	5.	5.	0.06
ROUTED TO	SLAKE	0.	0.03	0.	0.	0.	0.06
ROUTED TO	RLAKE	0.	0.03	0.	0.	0.	0.06
2 COMBINED AT	CER7	2231.	12.27	365.	109.	98.	2.07
ROUTED TO	RCER7	2220.	12.33	365.	109.	98.	2.07
HYDROGRAPH AT	120N	83.	12.03	13.	4.	4.	0.04
2 COMBINED AT	*CER8	2253.	12.33	378.	113.	102.	2.12
HYDROGRAPH AT	123A	127.	12.03	16.	5.	4.	0.08
ROUTED TO	S123A	125.	12.07	16.	5.	4.	0.08
HYDROGRAPH AT	123D	12.	12.07	2.	1.	1.	0.01
2 COMBINED AT	TRV1	137.	12.07	18.	5.	5.	0.09

ROUTED TO	STRV1	137.	12.10	18.	5.	5.	0.09
ROUTED TO	RTRV1	134.	12.17	18.	5.	5.	0.09
HYDROGRAPH AT	123C	6.	12.00	1.	0.	0.	0.00
ROUTED TO	S123C	6.	12.00	1.	0.	0.	0.00
ROUTED TO	R123C	6.	12.00	1.	0.	0.	0.00
ROUTED TO	R123C	6.	12.07	1.	0.	0.	0.00
3 COMBINED AT	CER8	2363.	12.30	396.	119.	107.	2.20
ROUTED TO	RCER8	2358.	12.33	396.	119.	107.	2.20
HYDROGRAPH AT	120O	16.	12.00	2.	0.	0.	0.01
ROUTED TO	S120O	16.	12.00	2.	0.	0.	0.01
ROUTED TO	R120O	15.	12.00	2.	0.	0.	0.01
ROUTED TO	R120O	15.	12.10	2.	0.	0.	0.01
HYDROGRAPH AT	120Q	65.	12.03	10.	3.	3.	0.04
3 COMBINED AT	*CER9	2396.	12.33	408.	122.	111.	2.25
HYDROGRAPH AT	120P	55.	12.00	6.	2.	2.	0.03
ROUTED TO	S120P	55.	12.00	6.	2.	2.	0.03
ROUTED TO	R120P	54.	12.00	6.	2.	2.	0.03
2 COMBINED AT	CER9	2404.	12.33	414.	124.	112.	2.27
ROUTED TO	SCER9	563.	13.03	414.	124.	112.	2.27
HYDROGRAPH AT	120R	20.	12.03	4.	1.	1.	0.01
HYDROGRAPH AT	120S	13.	12.03	2.	1.	1.	0.01
3 COMBINED AT	CER10	591.	12.13	419.	126.	114.	2.29
ROUTED TO	RCER10	590.	12.17	419.	126.	114.	2.29
HYDROGRAPH AT	120T	4.	12.00	1.	0.	0.	0.00

2 COMBINED AT	*CER11	592.	12.17	420.	126.	114.	2.30
HYDROGRAPH AT	122C	26.	12.00	3.	1.	1.	0.01
DIVERSION TO	DO122C	13.	12.00	2.	1.	1.	0.01
HYDROGRAPH AT	D122C	13.	12.00	1.	0.	0.	0.01
ROUTED TO	R122C	13.	12.03	1.	0.	0.	0.01
HYDROGRAPH AT	122E	61.	12.03	9.	3.	2.	0.03
2 COMBINED AT	LSR2B	74.	12.03	10.	3.	3.	0.05
ROUTED TO	RLSR2B	73.	12.07	10.	3.	3.	0.05
HYDROGRAPH AT	122D	58.	12.03	7.	2.	2.	0.03
ROUTED TO	R122D	58.	12.03	7.	2.	2.	0.03
HYDROGRAPH AT	122F	16.	12.03	3.	1.	1.	0.01
ROUTED TO	R122F	16.	12.07	3.	1.	1.	0.01
HYDROGRAPH AT	122G	45.	12.00	6.	2.	2.	0.02
4 COMBINED AT	LSR2	191.	12.03	27.	9.	8.	0.11
ROUTED TO	RLSR2	189.	12.03	27.	9.	8.	0.11
HYDROGRAPH AT	122A	30.	12.07	5.	2.	1.	0.02
HYDROGRAPH AT	D122C	13.	12.00	2.	1.	1.	0.01
ROUTED TO	RD122C	13.	12.13	2.	1.	1.	0.01
2 COMBINED AT	LSR1B	42.	12.07	7.	2.	2.	0.02
ROUTED TO	RLSR1B	40.	12.17	7.	2.	2.	0.02
HYDROGRAPH AT	122B	68.	12.00	10.	3.	3.	0.03
2 COMBINED AT	LSR1	100.	12.03	17.	6.	5.	0.05
ROUTED TO	RLSR1	99.	12.07	17.	6.	5.	0.05
HYDROGRAPH AT	122H	12.	12.00	2.	1.	1.	0.01

HYDROGRAPH AT	122I	13.	12.03	2.	1.	1.	0.01
4 COMBINED AT	LSR3	312.	12.07	48.	16.	14.	0.18
ROUTED TO	RLSR3	311.	12.07	48.	16.	14.	0.18
HYDROGRAPH AT	122J	42.	12.03	6.	2.	2.	0.03
2 COMBINED AT	LSR4	353.	12.07	53.	17.	16.	0.20
ROUTED TO	RLS4	351.	12.10	53.	17.	16.	0.20
HYDROGRAPH AT	122K	5.	12.03	1.	0.	0.	0.00
2 COMBINED AT	LSR5	356.	12.10	54.	18.	16.	0.21
2 COMBINED AT	CER11	924.	12.13	474.	144.	130.	2.50
ROUTED TO	RCER11	919.	12.17	474.	144.	130.	2.50
HYDROGRAPH AT	120U	38.	12.00	5.	2.	2.	0.02
2 COMBINED AT	*CER12	941.	12.17	479.	145.	131.	2.52
HYDROGRAPH AT	121A	78.	12.07	10.	3.	2.	0.05
ROUTED TO	R121A	77.	12.07	10.	3.	2.	0.05
HYDROGRAPH AT	121B	29.	12.07	4.	1.	1.	0.02
2 COMBINED AT	LTD1	106.	12.07	14.	4.	3.	0.07
2 COMBINED AT	CER12	1036.	12.17	493.	149.	135.	2.59
ROUTED TO	RCER13	1034.	12.17	493.	149.	135.	2.59
HYDROGRAPH AT	120V	18.	12.03	2.	1.	1.	0.01
2 COMBINED AT	CER13	1046.	12.17	495.	150.	135.	2.60
ROUTED TO	SCER13	1039.	12.20	495.	150.	135.	2.60
ROUTED TO	RCER13	1032.	12.23	495.	150.	135.	2.60
HYDROGRAPH AT	120X	33.	12.00	5.	2.	1.	0.02
2 COMBINED AT	*CER14	1045.	12.20	499.	151.	137.	2.62

+	HYDROGRAPH AT	120W	10.	12.00	1.	0.	0.	0.00
+	ROUTED TO	S120W	8.	12.03	1.	0.	0.	0.00
+	ROUTED TO	R120W	8.	12.07	1.	0.	0.	0.00
+	2 COMBINED AT	CER14	1052.	12.20	500.	152.	137.	2.62

** NORMAL END OF HEC-1 ***

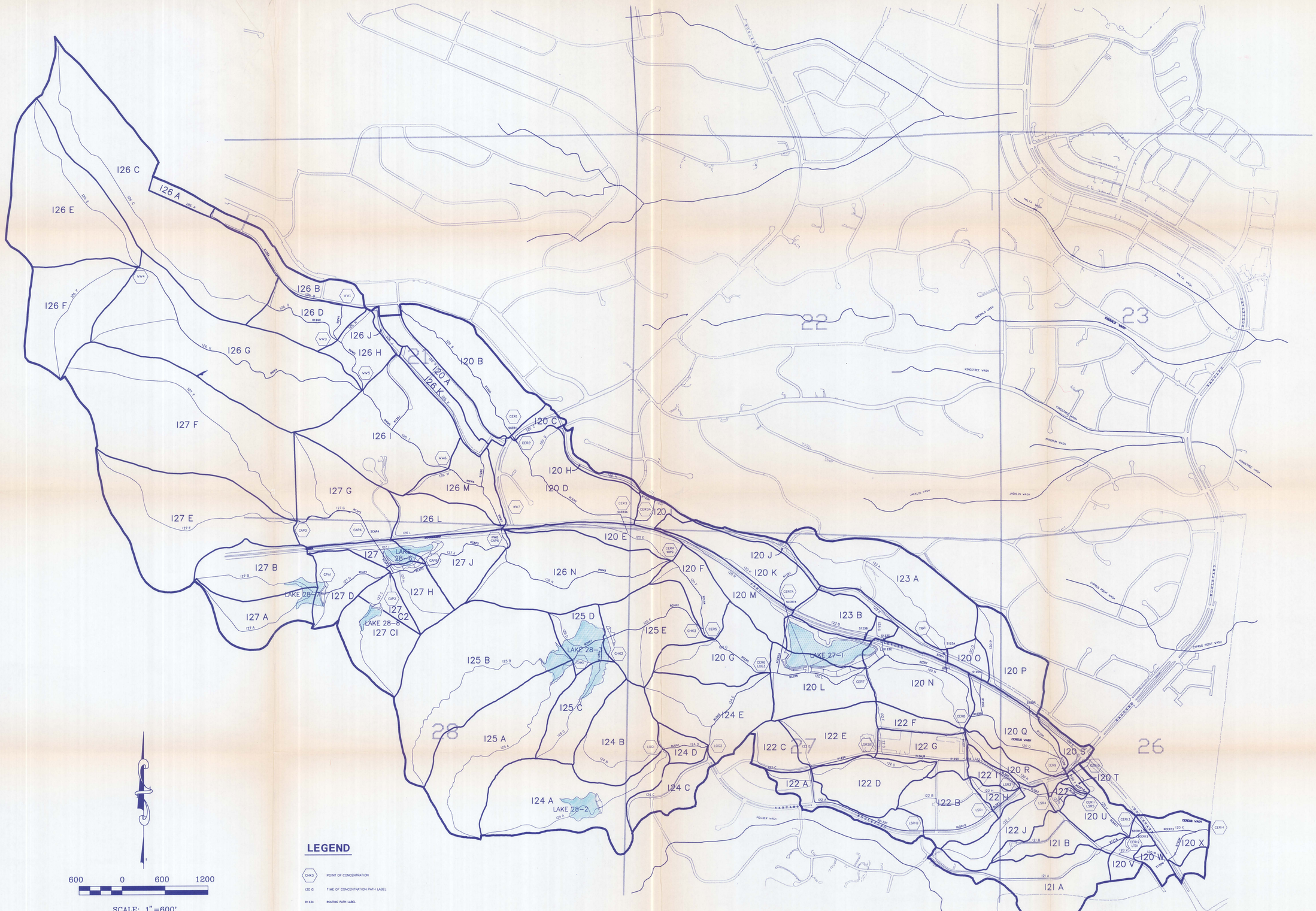

HYDROLOGY MAP

ENGINEERS, INC.
2255 NORTH 44TH STREET, SUITE 330
PHOENIX, ARIZONA 85008
TELEPHONE (602) 244-2566

DESIGN	HAA
DRAWN	JDS
CHECKED	SEK
REVISIONS:	

FOUNTAIN HILLS

EFFLUENT LAKES HYDROLOGY

PLATE 1

Sheet 1 of 1

FILE: CFP-HYD.DWG DATE: 12/01/94

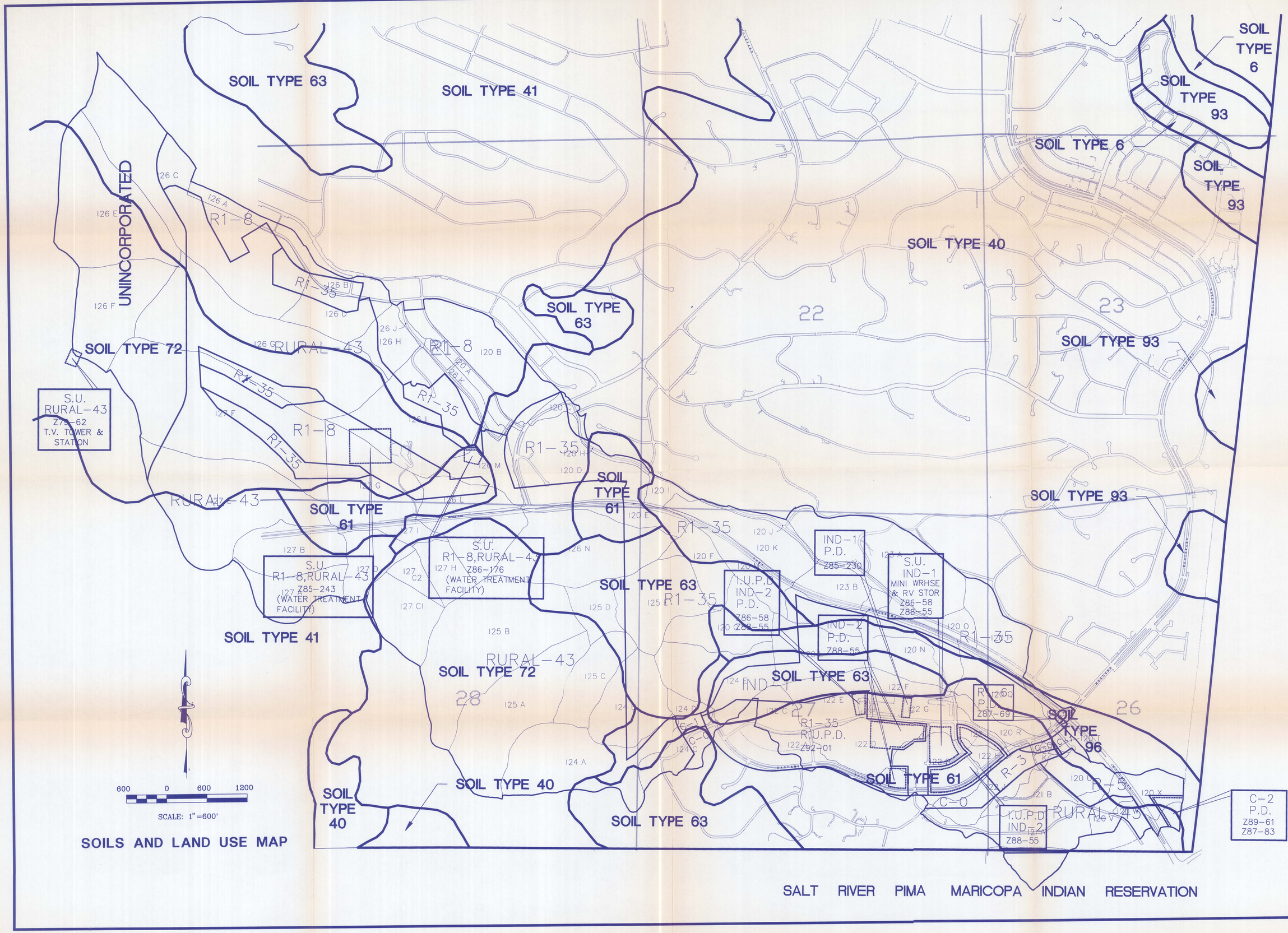

SOILS AND LAND USE MAP

ENGINEERS, INC.
2255 NORTH 44TH STREET, SUITE 330
PHOENIX, ARIZONA 85008
TELEPHONE (602) 244-2566

DESIGN	HAA
DRAWN	JDS
CHECKED	SEK
REVISIONS:	

FOUNTAIN HILLS

EFFLUENT LAKES HYDROLOGY

PLATE 2