Property of
Flood Control District of MC Library
Please Return to
2801 W. Durango
Phoenix, AZ 85009

Design Computations

Vineyard Road Dam

SCS-344a 5-57
Tabular Computations

U. S. DEPARTMENT OF AGRICULTURE
SOIL CONSERVATION SERVICE

Vineyard Road Dam
Depth-Capacity Calculations
Planimetered with Large Planimeter PMW 3-10-65

1. Elev.	2. Planimeter Area	3. (2)×10.71 = Area in Acres	4. Average End Area	5. Ac. Ft. (4)× diff. in Elev.	6. Acc. Ac. Ft.			
1564°	0	0						
1566°	13.087	140.16	70.08	140.16	140.16			
1570°	40.470	433.43	286.80	1,147.2	1,287.36			
1574°	72.501	776.48	604.95	2,419.8	3,707.16			
1578°	102.011	1,092.54	934.51	3,738.04	7,445.20			
1582°	130.620	1,398.94	1,245.74	4,982.96	12,428.16			
		Check 1582 Cont.						
			Plan.					
			46.7		From Plans			
			59.2		Wall			
			50.3					
			35.4					
		Total	191.6 × 2 = 383.2 sq in					
				383.2 × 3.67 = 1406 Acres = 1398 ac				
							OK	

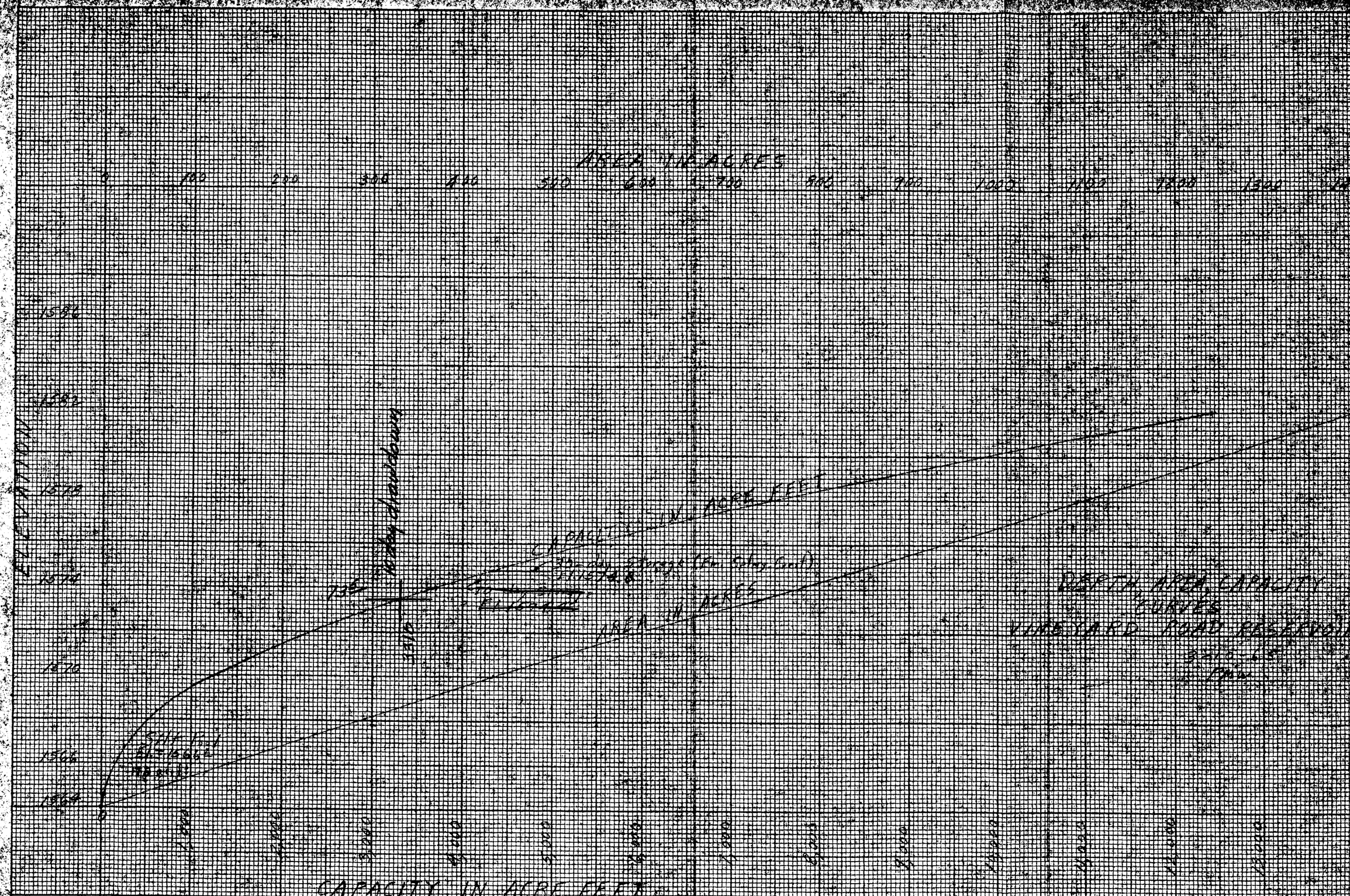
AREA IN ACRES
0
100
200
300
400
500
600
700
800
900
1000
1100
1200
1300
1400
ELEVATION
1586
1582
1578
1574
1570
1566
1564
CAPACITY IN ACRE FEET
AREA IN ACRES
DEPTH, AREA, CAPACITY CURVES
VINEYARD ROAD RESERVOIR
CAPACITY IN ACRE FEET
1,000
2,000
3,000
4,000
5,000
6,000
7,000
8,000
9,000
10,000
11,000
12,000
13,000

Arizona Vineyard Road Dam.
GDH 11-10-64
Total Drainage Area.

Planimeter: 1st 53.41 □"
2nd 53.33 □"
53.41 □"

Scale 1 □" = 1 mile² Area = 53.4 miles²

Arizona
JMM 11-17-64

Curve Number Revisions

original documentation P. 51

Vineyard Rd
~~Rittenhouse~~ DA = 53.9 sq. mi

unit	Area	CN
7	16.92	83.0
8	1.54	83.5
9	6.50	81.6
10	4.46	84.8
13	8.80	84.2
14	15.23	80.0
	53.45	

wt CN = 82.3
use 82.0

Rittenhouse DA = 49.6
DA. change = 51.8 - 49.6 = 2.20
this is all in unit 14 with CN = 80

Revised CN =

unit	Area	CN
7	25.78	83.0
9	14.16	81.6
13	.18	84.2
14	8.13	80.0
15	1.36	79.1

Composite CN = 82.0

Arizona
JMM 11-17-64
Revision of Tc

Ref.
Page
Hydrology

Powerline
Distance moved up stream = 1.50 mi
Velocity for G3 cross-section = 21.0 f/s 108
$\Delta T = \frac{(1.5)(5280)}{21.0\ (3600)} = .11$

Revised Tc = 2.00 - .11 = 1.89 hr

Vineyard Road
Distance moved up stream = 1.40 mi
Velocity for G4 cross section = 6.0 f/s 108
$\Delta T = \frac{(1.4)\ 5280}{6.0\ \ 3600} = 0.34$ hr.

Revised Tc = 3.01 - .34 = 2.67 hr

Rittenhouse
Distance moved up stream = 0.50 mi
Velocity for H5 = 3.1 f/s 108
$\Delta T = \frac{(0.5)(1.40)}{3.10} = 0.23$ hr

revised Tc = 5.25 - .23 = 5.02 hr

Arizona Vineyard Road Dam

JMM 11-17-64

Volume - Duration Study

		Hyd. Page Ref.
DA. = 53.4 Sq. Mi	CN = 82	
Area Reduction = .65		P. 46
Trans. Loss factor = .66		P. 63
1% 6hr P = 4.10"		P 45

6hr Area P = (.66)(4.10) = 2.70"

Duration	Ratio to 6hr		Area Precip in	Runoff Q in	Adj for Trans. Loss
2hr	0.76	x 2.70 =	1.97	.63	x .66 = 0.41
4hr	0.89	x 2.70 =	2.40	.92	x .66 = 0.60
6hr	1.00	x 2.70 =	2.70	1.14	x .66 = 0.75
12hr	1.23	x 2.70 =	3.32	1.63	x .66 = 1.07
24hr	1.53	x 2.70 =	4.13	2.31	x .66 = 1.52

Runoff for Durations greater than 1 Day computed from ratios to 1 Day runoff P. 69

duration	Ratio To 1 Day		Runoff Q in	Q+10day Release	Q+20	Q+30
1 day	1.00	x 1.52 =	1.52	1.71	1.62	1.61
2 day	1.09	" =	1.65	2.03	1.88	1.83
7 day	1.25	" =	1.90	3.23	2.70	2.52
15 day	1.49	" =	2.26		3.98	3.58
30 day	1.87	" =	2.84			5.98

Rittenhouse

10 Day Release rate = 273 cfs = .190"/day

20 Day Release rate = 165 cfs = .115"/day

30 Day Release rate = 127 cfs .088"/day

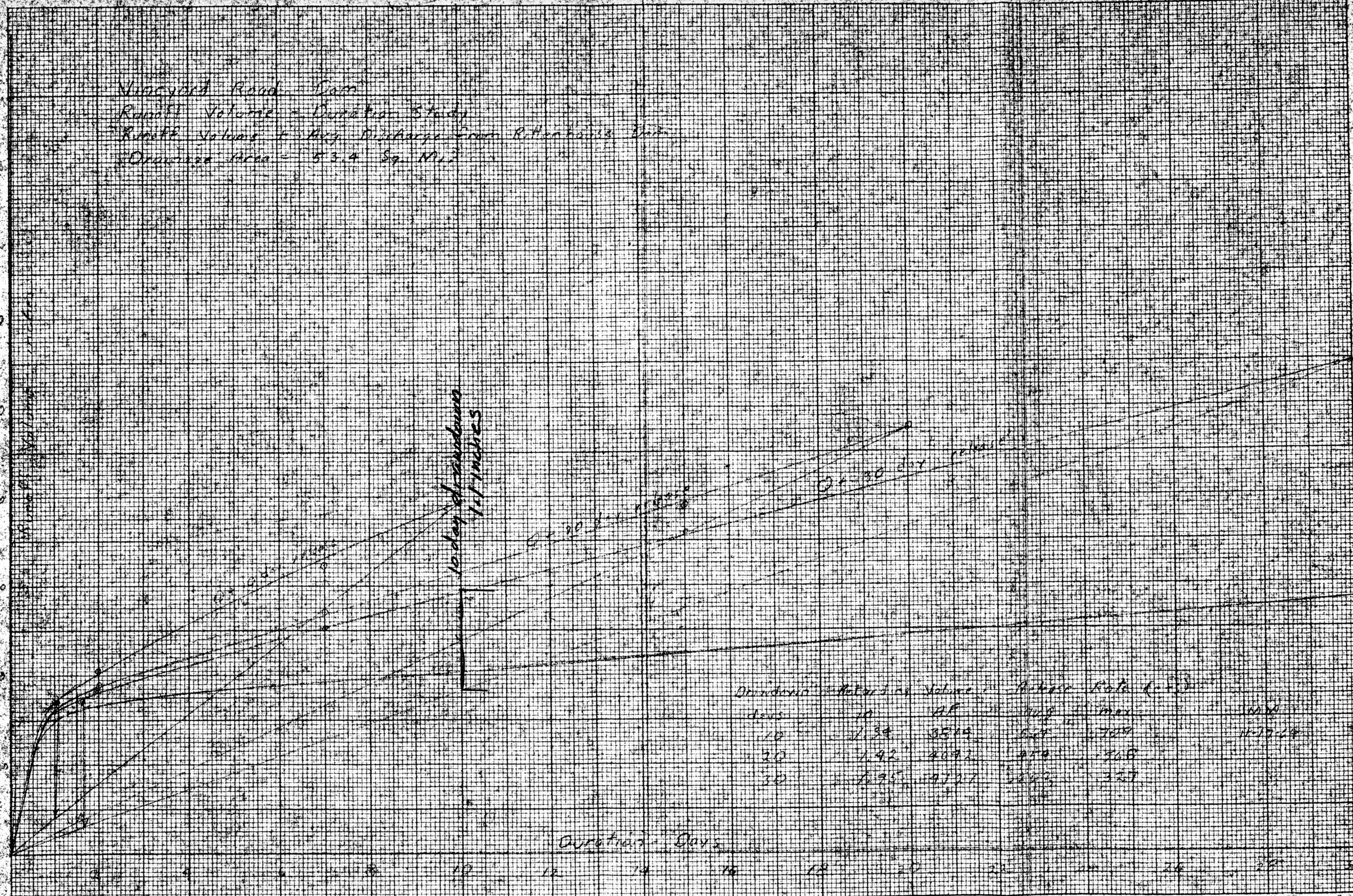
Vineyard Road Dam
Runoff Volume - Duration Study
Runoff Volume + Avg. Discharge from Rittenhouse Dam
Drainage Area - 53.4 Sq. Mi.
10 day drawdown 1.1 inches
Q + 30 day release
Q + 20 day release
Q + 10 day release
Duration - Days
Drawdown Retarding Volume Release Rate (cfs)
days in AF avg max MM
10 1.34 3814 627 709 11-17-64
20 1.42 4042 454 568
30 1.95 4727 [illegible] 327
600
500
400
300
200
100
2
4
6
8
10
12
14
16
18
20
22
24
26
28
30

SCS-319
6-58

U.S. DEPARTMENT OF AGRICULTURE
SOIL CONSERVATION SERVICE

Freeboard HYDROGRAPH COMPUTATION

WATERSHED OR PROJECT _____ STATE Arizona

STRUCTURE SITE OR SUBAREA Vineyard Road

DR. AREA 53.9 SQ. MI. T_c 2.67 HR. RUNOFF CONDITION NO. II

RUNOFF CURVE NO. 82 . STORM DISTRIB. CURVE II . HYDROGRAPH FAMILY NO. 2

STORM DURATION 6 HR. RAINFALL: POINT 7.5 IN. AREAL 4.35 IN.

Q 2.51 IN. COMPUTED T_p 1.87 HR. T_o 5.92 HR.

(T_o/T_p): COMPUTED 3.16 : USED 3.00 . REVISED T_p 1.97 .

$q_p = \frac{484\ A}{REV.\ T_p}$ = 13,120 CFS. Qq_p = 32,930 CFS.

t(COLUMN) = (t/T_p) REV. T_p. q(COLUMN) = (q_c/q_p) Qq_p.

LINE NO.	t HOURS	q CFS	LINE NO.	t HOURS	q CFS	LINE NO.	t HOURS	q CFS
1	0	0	21	14.97	0	41		
2	.74	1614	22			42		
3	1.49	7409	23			43		
4	2.24	12,974	24			44		
5	2.99	14,818	25			45		
6	3.74	14,423	26			46		
7	4.49	13,567	27	check		47		
8	5.24	12,480	28	Q = 2.52 OK		48		
9	5.98	11,460	29			49		
10	6.73	10,241	30			50		
11	7.48	7376	31			51		
12	8.23	4808	32			52		
13	8.98	2667	33			53		
14	9.73	1515	34			54		
15	10.48	889	35			55		
16	11.22	494	36			56		
17	11.97	296	37			57		
18	12.72	1[illegible]	38			58		
19	[illegible]	[illegible]	39			59		
20			40			60		

SCS-319
6-58

U. S. DEPARTMENT OF AGRICULTURE
SOIL CONSERVATION SERVICE

Emergency Sp. HYDROGRAPH COMPUTATION

WATERSHED OR PROJECT _____ STATE Arizona

STRUCTURE SITE OR SUBAREA Vineyard Pond

DR. AREA 53.4 SQ. MI. T_c 2.67 HR. RUNOFF CONDITION NO. 11

RUNOFF CURVE NO. 82 . STORM DISTRIB. CURVE E . HYDROGRAPH FAMILY NO. 3

STORM DURATION 6 HR. RAINFALL: POINT 3.5 IN. AREAL 2.03 IN.

Q .67 IN. COMPUTED T_p 1.87 HR. T_o 5.35 HR..

(T_o / T_p): COMPUTED 2.86 ; USED 3.0 . REVISED T_p 1.78 .

$q_p = \frac{484\ A}{REV.\ T_p}$ = 14,520 CFS. Qq_p = 9728 CFS.

t(COLUMN) = (t/T_p) REV. T_p. q(COLUMN) = (q_c/q_p) Qq_p.

LINE NO.	t HOURS	q CFS	LINE NO.	t HOURS	q CFS	LINE NO.	t HOURS	q CFS
1	0	0	21			41		
2	.78	418	22			42		
3	1.57	1936	23			43		
4	2.35	3346	24			44		
5	3.13	3950	25			45		
6	3.92	4154	26			46		
7	4.70	4008	27			47		
8	5.48	3911	28			48		
9	6.26	3,473	29	check		49		
10	7.05	2,276	30	Q = .68		50		
11	7.83	1,295	31			51		
12	8.61	652	32			52		
13	9.40	350	33			53		
14	10.18	165	34			54		
15	10.96	88	35			55		
16	11.75	39	36			56		
17	12.53	19	37			57		
18	13.31	10	38			58		
19	14.09	0	39			59		
20			40			60		

Arizona — Vineyard Road Str.

JMM 12-3-64

Em. Spillway Rating Curve (N)

Back water curves

Q = 269 cfs crest elev = ~~1574.90~~ 1574.8

Flo. Li. El.	Length from Crest	depth	Q	V	$V^2/2g$	elev.
	0	0.4	269 cfs			
	0	1.6	2712			
1574.8	50	2.00				
1573.8	100	3.33				
1573.8	950	3.90		2.23	.078	~~1577.67~~ 1577.77
	1788					
	0	2.0	3910			
1574.8	50	2.57				
1573.8	100	3.88				
1573.8	950	4.55		2.73	.11	~~1578.58~~ 1578.46
1573.8	1788					
	0	2.40	5335			
1574.8	50	2.87				
1573.8	100	4.30				
1573.8	604					
1573.8	950	5.04		3.35	.17	~~1579.14~~ 1579.01
	1788					
	0	2.80	6688			
1574.8	50	3.30				
1573.8	100	4.78				
	604					
1573.8	952	5.62		3.75	.21	~~1579.73~~ 1579.63
	1788					

Arizona Vineyard Road

JMM 12-7-64

Stage discharge Curve

Emergency Spillway S. End.

Subcritical $n = .030$ $S = .0063$ $b = 300$

$Q = AV$ $S^{1/2} = .07937$ $z = 3$

$V = \frac{1.49}{n} R^{2/3} S^{1/2} = 3.9435\ R^{2/3}$

d_m ft	A ft^2	R ft	$R^{2/3}$	V ft/sec	Q cfs
0.0	0	0	0		
0.4	120	.40	.543	2.1413	257
0.8	241.8	.80	.861	3.3954	821
1.2	364.2	1.18	1.111	4.3812	1596
1.6	487.5	1.57	1.350	5.3237	2595
2.0	612.0	1.93	1.550	6.1124	3741
2.4	737.1	2.33	1.756	6.9247	5104
2.8	436.4	2.70	1.940	6.8616	5739
3.2	990.6	3.09	2.120	8.3602	8282
3.6	1188.8	3.46	2.288	9.0227	10,726
4.0	1248.0	3.83	2.450	9.6615	12,057

Arizona Vineyard Rd. Dam

JMM 12-7-64

Emergency Spillway S. End

Water Surface Profile U curves

crest = ~~1574.9~~ 1574.8

Flo.Li.El.	dist	depth	Q	V	V²/2g	elev.
1574.8	0	0.8	821			
1574.8	50	1.06				
1573.8	100	2.95				1578.2
1573.8	967	3.40		.32	.00	~~1577.30~~
	0	1.20	1596			
1574.8	50	1.53				
1573.8	100	2.73				1577.04
1573.8	967	3.20		1.61	.04	~~1577.14~~
	0	1.60	2595	1.61	.04	
1574.8	50	1.95				
1573.8	100	3.55				1577.77
1573.8	967	3.90		2.13	.07	~~1577.87~~
	0	2.00	3741			
1574.8	50	2.42				
1573.8	100	3.74				1578.24
1573.8	967	4.35		2.74	.11	~~1578.34~~
	0	2.40	5104			
1574.8	50	2.92				
1573.8	100	4.24				1579.00
1573.8	967	5.03		3.15	.15	1579.10
	0	2.80	8282			
1574.8	50	3.55				
1573.8	100	5.05				1579.77
1573.8	967	5.70		4.19	.27	~~1579.87~~

K+E 10 X 10 TO THE ½ INCH 359-11
KEUFFEL & ESSER CO. MADE IN U.S.A.

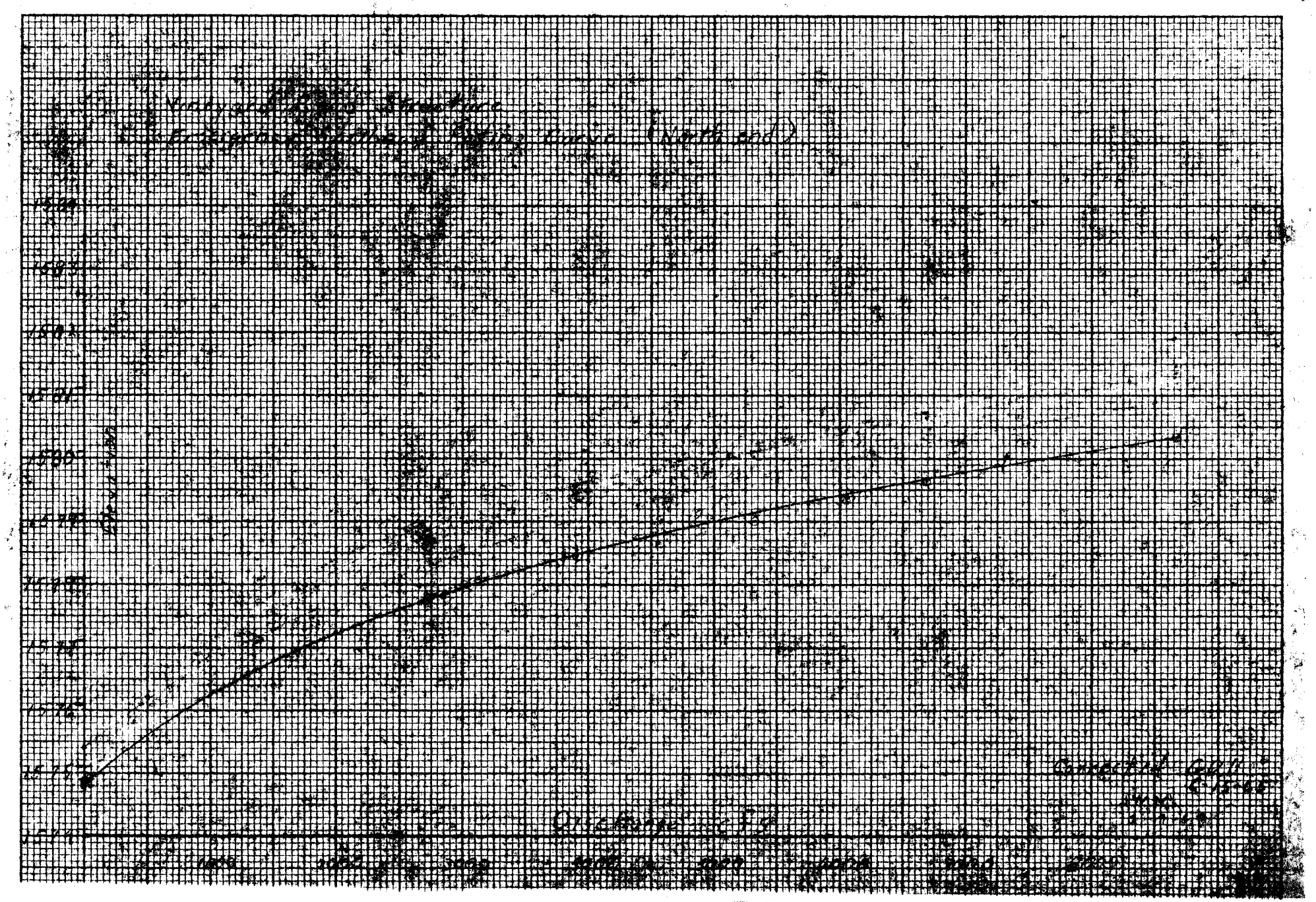

K&E 10 X 10 TO THE ½ INCH 359-11
KEUFFEL & ESSER CO. MADE IN U. S. A.

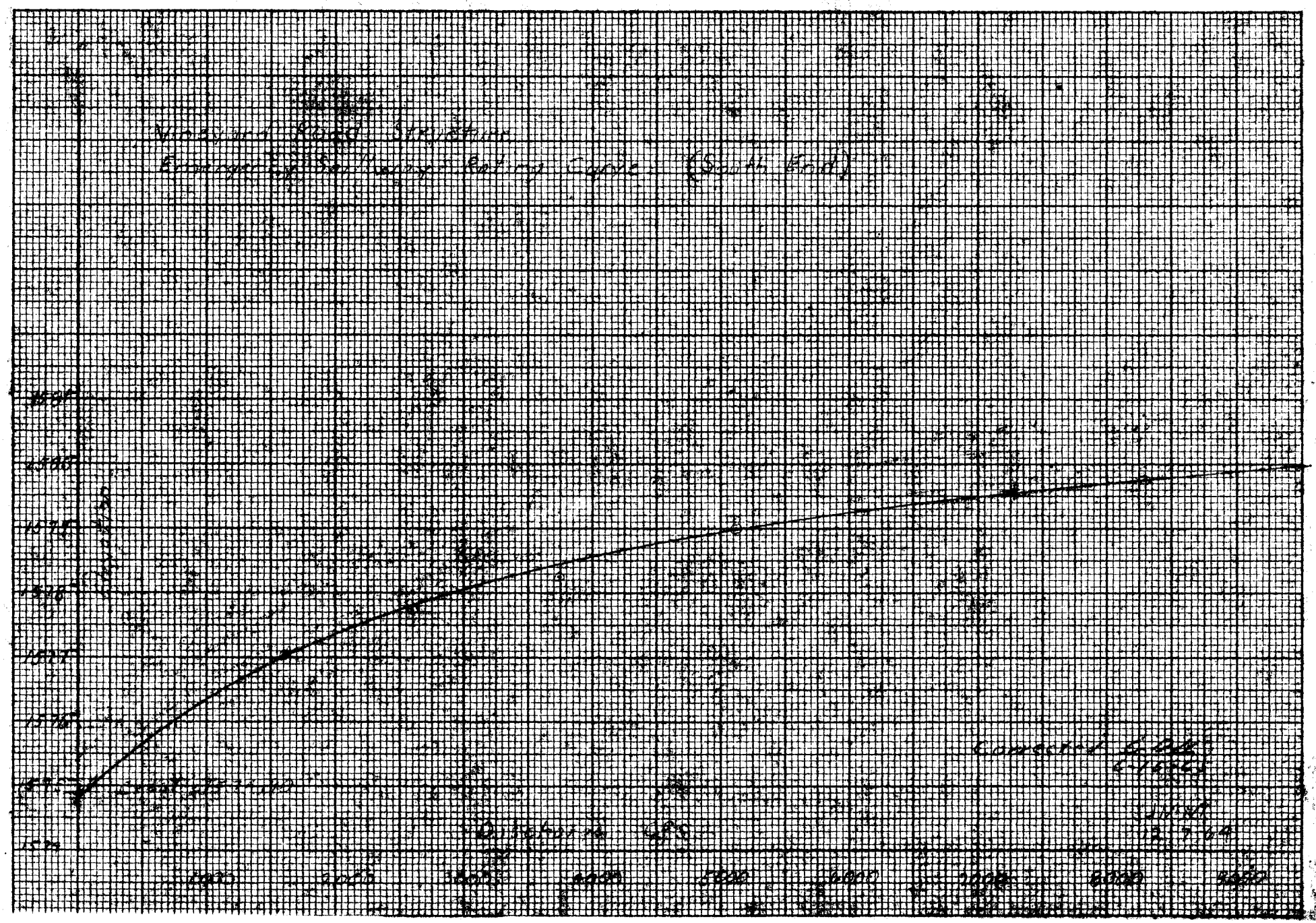

Arizona Vineyard Road.
COH 6-14-65
Principal Spillway Outflow.

10 day Release time

$Q = K h^{\frac{1}{2}}$

$Q_{max} = 709$ cfs.
$h_{max} = 1574.4 - 1564.0 = 10.4'$

$K = \frac{Q}{h^{\frac{1}{2}}} = \frac{709}{3.22} = 220.0$

30 day release time

$Q_{max} = 327$ cfs

$h_{max} = 1574.8 - 1564.0 = 10.8$

$K = \frac{Q}{h^{\frac{1}{2}}} = \frac{327}{3.30} = 99.10$

Elev.	h	$h^{\frac{1}{2}}$	10 day Q cfs	30 day Q cfs.
1564	0	0	0	0
1565	1.0	1.0	220	99
1566.2	2.2	1.48	326	147
1567	3.0	1.73	381	171
1568	4.0	2.0	440	198
1569	5.0	2.24	493	222
1570	6.0	2.45	540	243
1371	7.0	2.65	584	262
1572	8.0	2.83	623	281
1573	9.0	3.00	660	296
1573.5	9.5	3.08		305
1574	10.0	3.16	695	313
1574.8	10.8	3.29	724	326
157.6	12.0	3.47		344
1577	13.0	3.61		358
1578	14.0	3.74		371
1579	15.0	3.87		384
1580	16.0	4.0		397
1581	17.0	4.13		410
1582	18.0	4.25		421

Arizona Vineyard Road Dam

GDH 6-15-65

Storage Vs cfs-hrs.

From Runoff volume-duration Curves = 1.1

D. A. = 53.4 Mi.^{2} $\frac{640}{12} = 53.33$

Silt Pool El. = 1566.2

Emerg Spwy (@ 30 day drawdown) = El. 1579.8

storage = (1.1 X 53.4 X 53.33) + 178 = 3,311 Ac. ft. = El. 1573.5

Table (1)

El.	Storage Ac. ft.	Storage above El. 1573.5	Storage X 12.1 = cfshrs	Total Disc. c.f.s. (see table 2)
1573.5	3,311	0		305
1574.0	3,675	364	4,404	313
1574.8	4,325	1,014	12,270	326
1575.0	4,500	1,189	14,387	
1576.0	5,400	2,089	25,277	1,894
1577.0	6,380	3,069	37,135	3,708
1578.0	7,500	4,189	50,687	6,346
1579.0	8,630	5,319	64,660	10,534
1580.0	9,820	6,509	78,759	17,547

Table (2) Principal & Emerg. Spwy. discharge

El.	Pr. Spwy cfs.	(S) Em. Spwy cfs	(N) Em. Spwy. cfs.	Total Discharge
1573.5	305			305
1574.0	313			313
1574.8	326	0	0	326
1576.0	344	750	800	1,894
1577.0	358	1660	1,750	3,708
1578.0	371	2900	3,675	6,346
1579.0	384	5150	5,000	10,534
1580.0	397	9,550	7,600	17,547

K+E 10 X 10 TO THE ½ INCH 359-11
KEUFFEL & ESSER CO. MADE IN U. S. A.

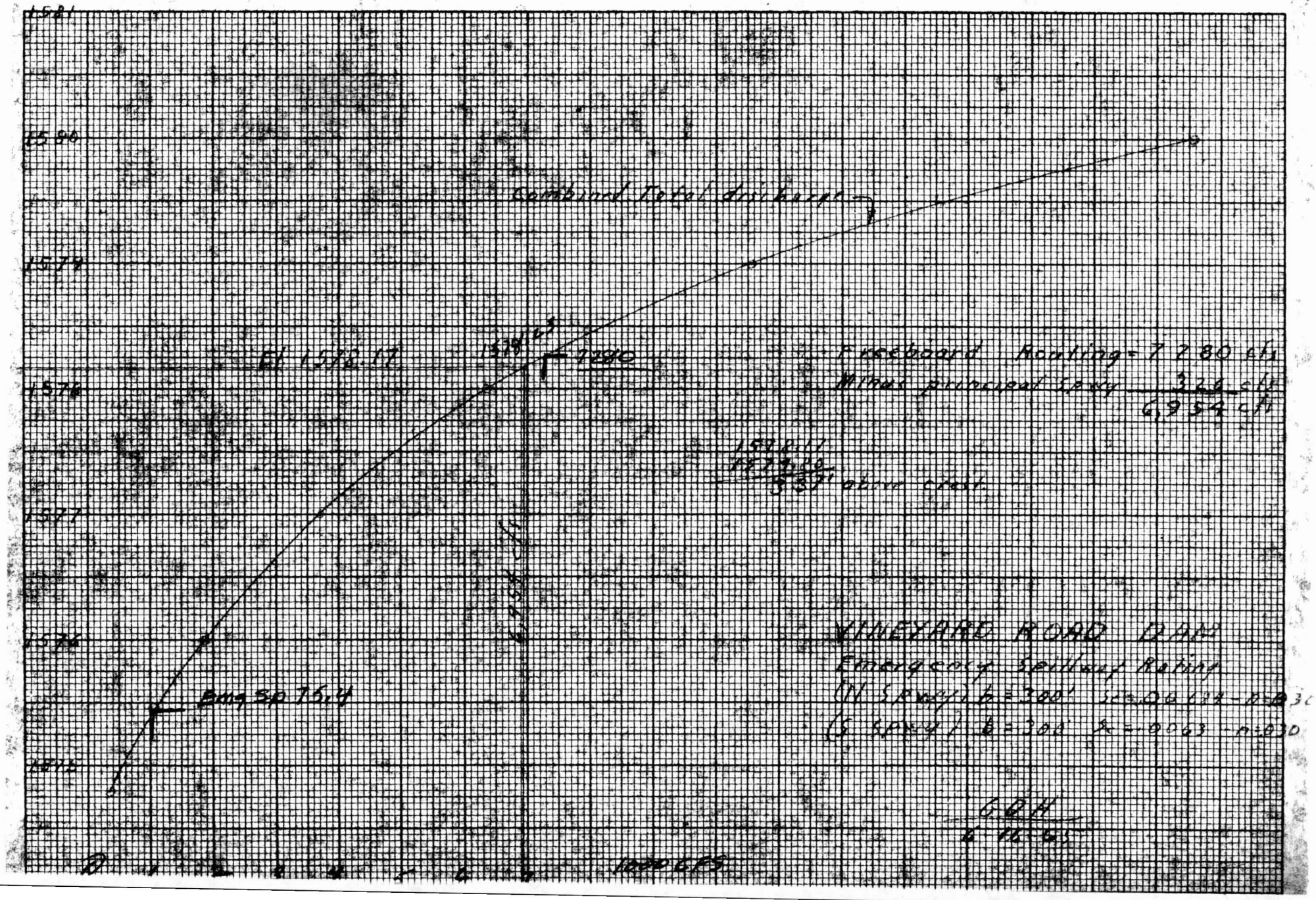

K+E 10 X 10 TO THE ½ INCH 359-11
KEUFFEL & ESSER CO. MADE IN U.S.A.

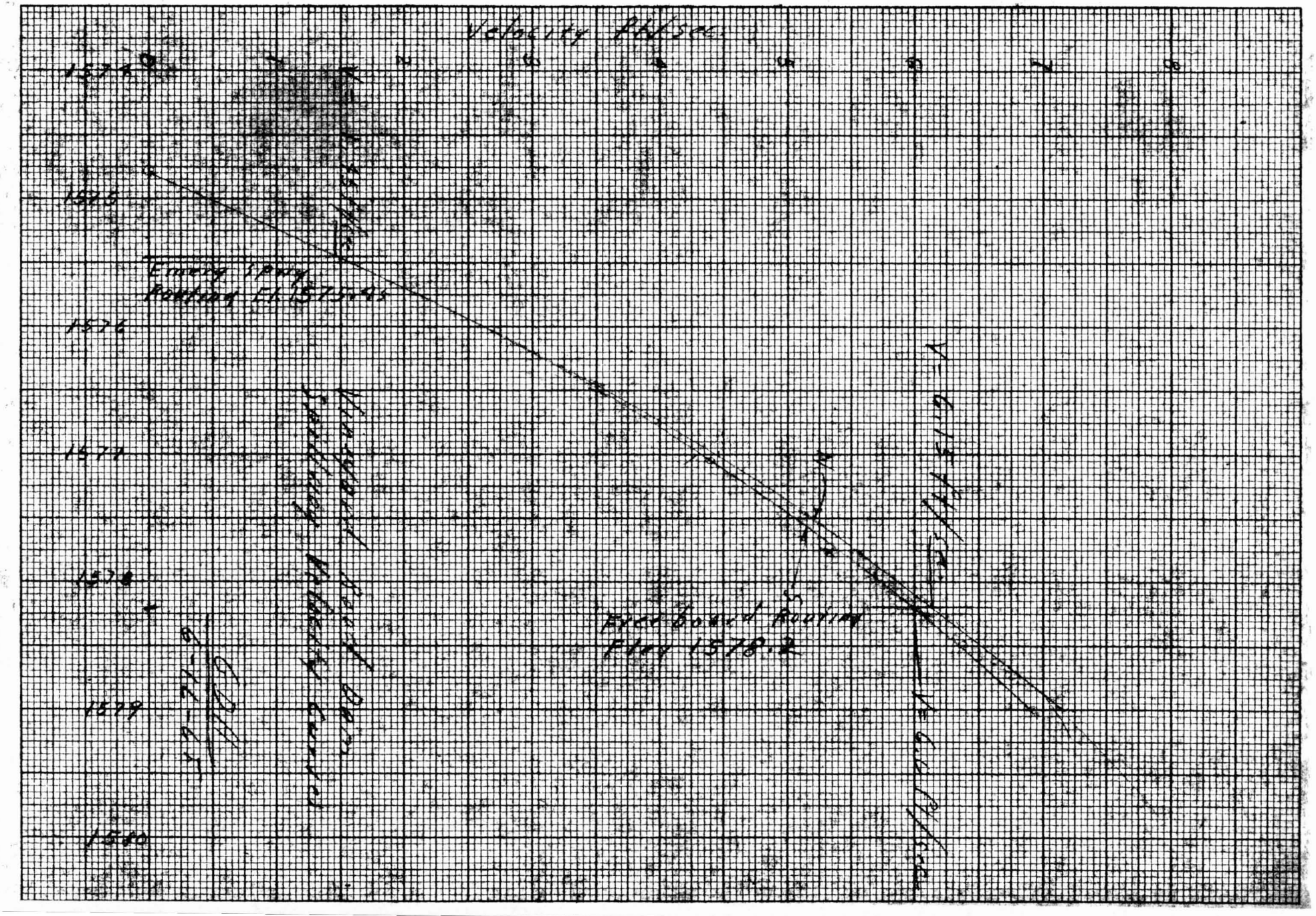

KEUFFEL & ESSER CO. MADE IN U. S. A.

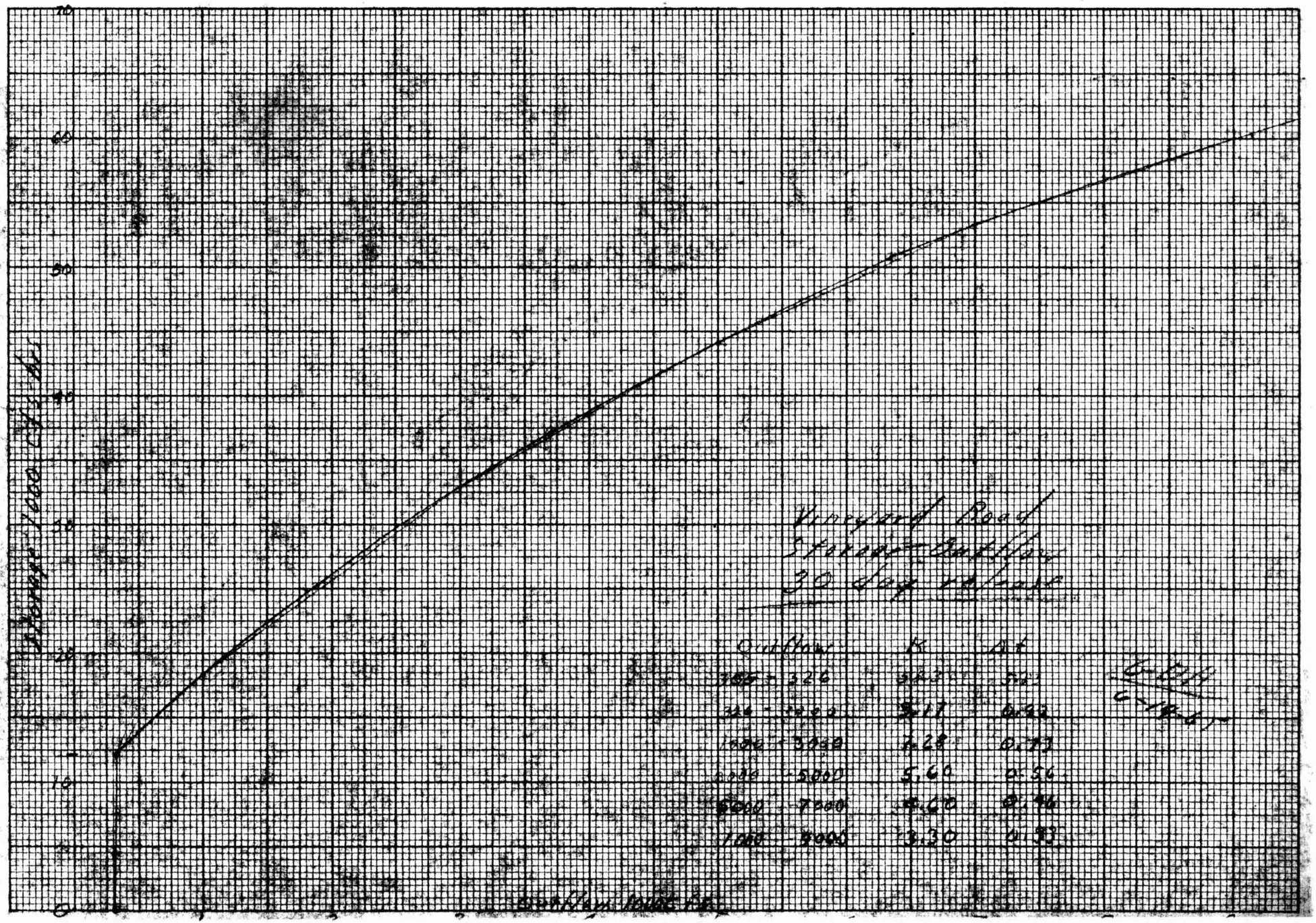

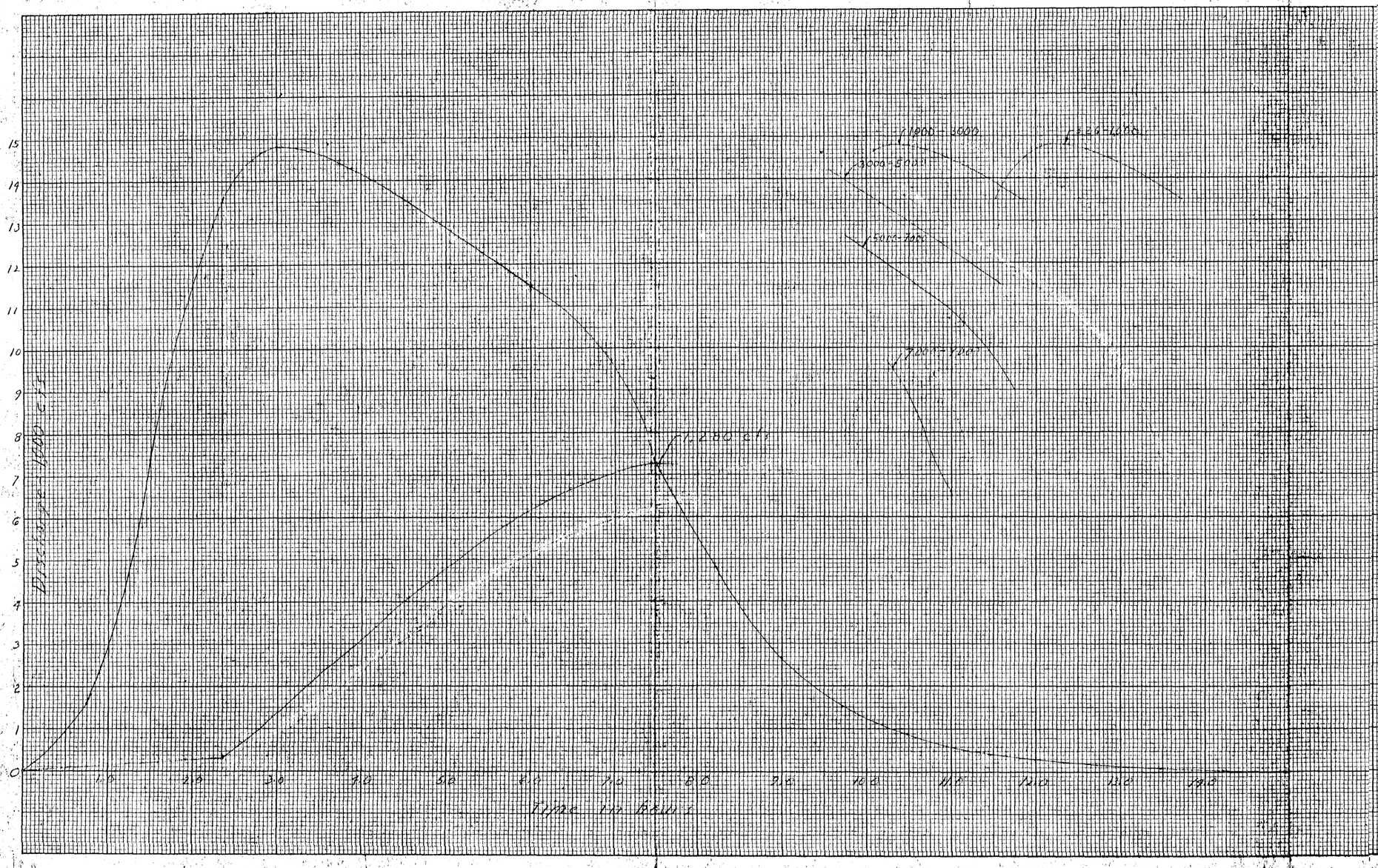

Area between curves = 54,720
Storage at pressure = 54,400
320
error = 0.58%

Vineyard Road Dam
Freeboard Hydrograph
Floodwater after 10 days drawdown
30 day release planned time

G.D.H.
6-13-65

K+E 20 X 20 TO THE INCH 359-10½G KEUFFEL & ESSER CO. MADE IN U.S.A.

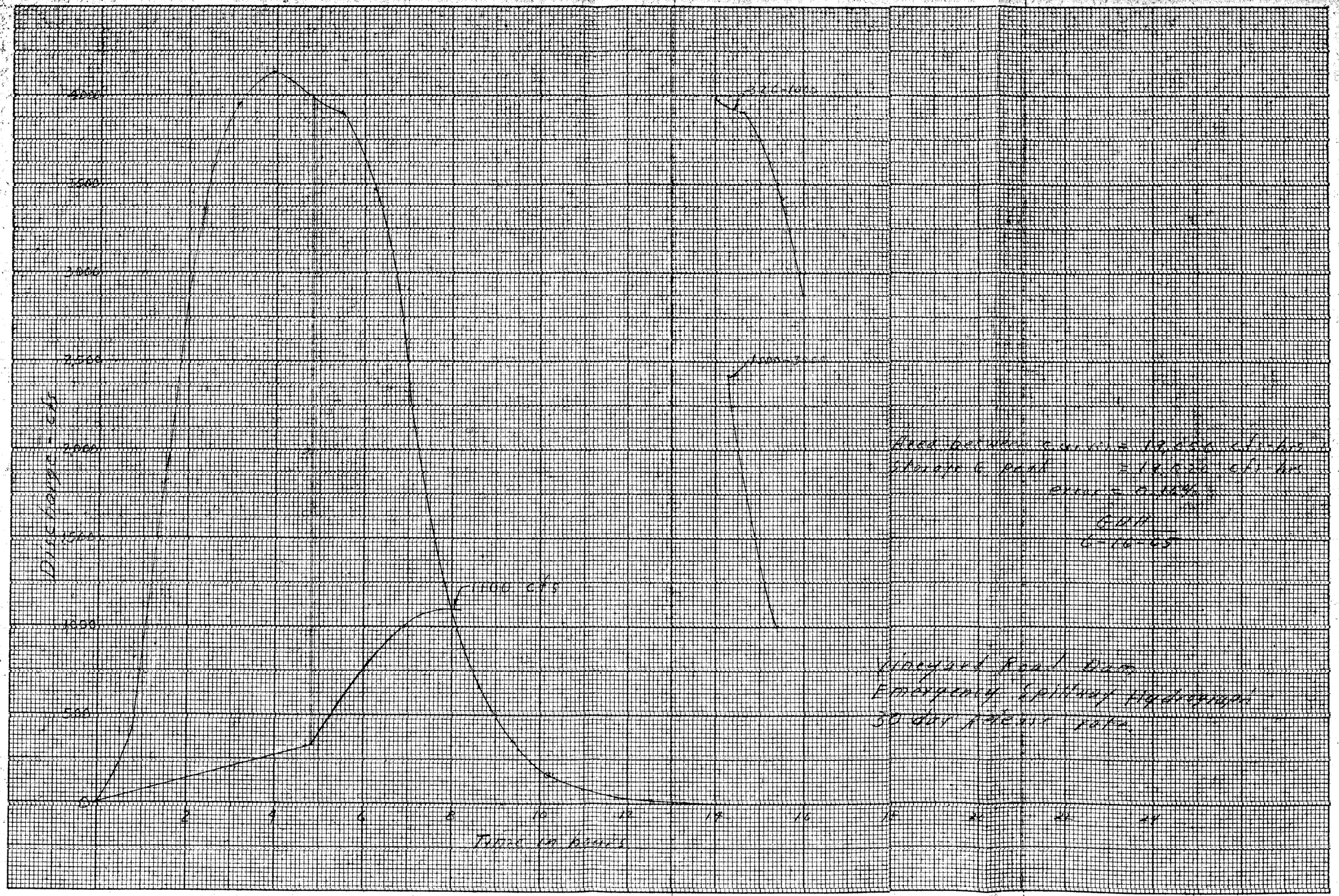

K+E 20 X 20 TO THE INCH 359-10½G
KEUFFEL & ESSER CO. MADE IN U.S.A.

Arizona Vineyard Rd Dam
Watt 6-20-65
Floodrouting Results

Principal Spillway Crest	1566 ±
Emergency Spillway Crest	1574 ±
Sediment Volume	185 Ac Ft
Water Surface 10 day drawdown	1573.5
Max W.S. Emg Sp Hydrograph	1575.5
" " Freeboard Hyd.	1578.2
Top Dam 1' Settlement + 3.0' F.B. above 75 ±	1579.5
Floodwater Retarding Volume	4325 Ac Ft
Vel Emg Sp Design Hyd	1.5 ft/sec
" " " Freeboard Hyd	6.2 ft/sec

NO. 340R-10 DIETZGEN GRAPH PAPER
10 X 10 PER INCH

EUGENE DIETZGEN CO.
MADE IN U. S. A.

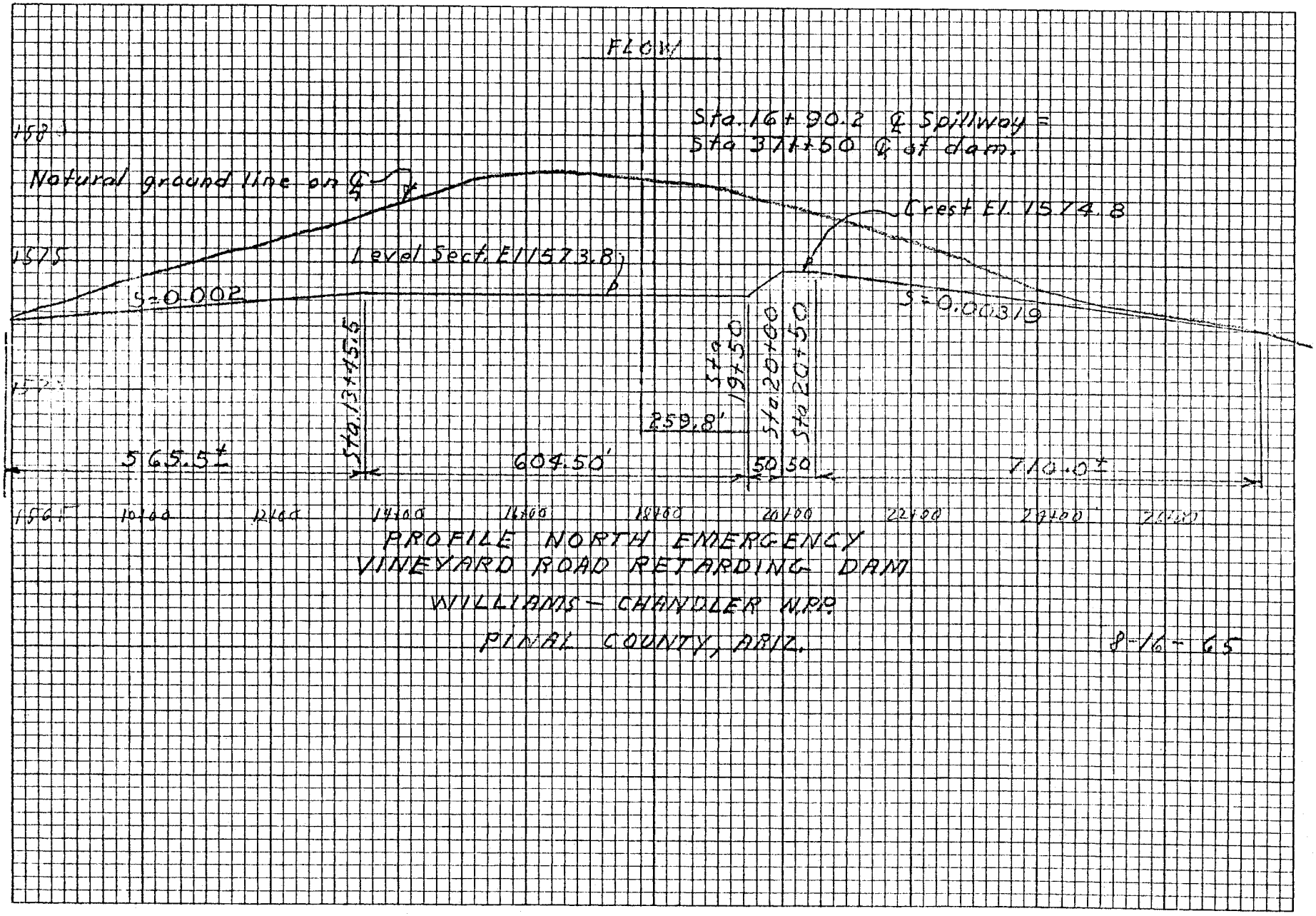

NO. 340R-10 DIETZGEN GRAPH PAPER
10 X 10 PER INCH

EUGENE DIETZGEN CO.
MADE IN U. S. A.

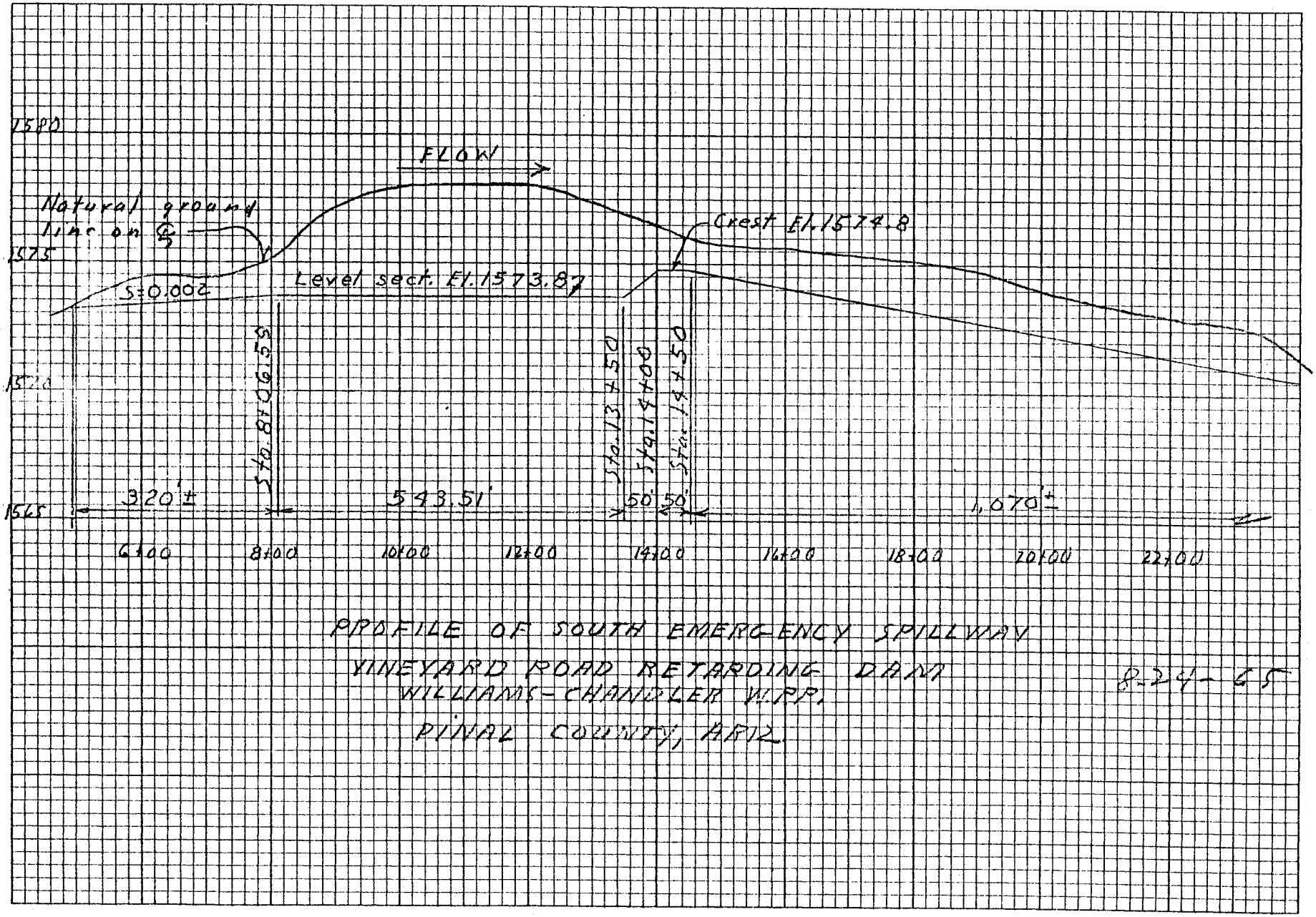

PROFILE OF SOUTH EMERGENCY SPILLWAY
VINEYARD ROAD RETARDING DAM
WILLIAMS-CHANDLER W.P.P.
PINAL COUNTY, ARIZ.

8-24-65

XERO COPY

Arizona Vineyard Road Dam
GOH 8-11-65
Check for capacity of South Emery
Spwy as designed

$$\text{Freeboard } Q = \frac{\frac{7280-326}{2}}{3\text{ ft.}} = 11.6 \text{ CFS/ft}$$

3477

$n = .030 \quad S = 0.00053$

$$D = \left(\frac{Qn}{1.486\, S^{1/2}}\right)^{3/5} = \left(\frac{11.6 \times .030}{1.486 \times .0045^{1/2}}\right)^{3/5} = 3.49^{3/5} = 2.12$$

.348

.067082

0.09968

$$\frac{Q^2}{2g} = \frac{11.6^2}{64.3} = 2.09$$

Sta	Depth	Btm Elev	WS Elev	V	h_v	WS Elev	
14+00	2.12	74.8	76.92	5.5	.47		
13+50	2.4	74.8	77.2				
13+00	3.68	73.8	77.48				
8+00	4.05	73.8	77.85				
4+60	5.00	73.0	78.0	2.3	.08	78.08	OK

For Spillway used in Routing

Max WS Elev = 78.2 OK

Friction Loss in approach

76.92 + .47 = 77.39

78.08 − 77.39 = 0.69 ft.

Arizona Vineyard Road Dam

GDH 8-11-65

Check for capacity of North Emergency spillway as designed Using Freeboard Hydrograph Q

$n = 0.030$, $S = 0.00319$

$$\text{Freeboard } Q = \frac{\frac{7280 - 326}{2}}{300} = 11.6 \text{ cfs/ft.}$$

3477

$$D = \left(\frac{Qn}{1.486\, S^{1/2}}\right)^{3/5}$$

$$= \frac{11.6 \times .030}{1.486 \times .00319^{1/2}} = \left(\frac{0.348}{1.486 \times .05657}\right)^{3/5} = 4.14^{3/5} = 2.35$$

.05406

$$\frac{Q^2}{2g} = \frac{11.6^2}{64.3} = 2.09$$

Sta	Depth	Btm Elev.	WS Elev	V	hv	WS Elev.
20+00	2.35	74.8	77.15			
19+50	2.54	74.8	77.34			
19+00	3.75	73.8	77.55			
13+50	4.08	73.8	77.88			
8+50	5.30	72.8	78.10	2.18	07	78.17

For Spillway used in Routing for freeboard Q

Max W.S. 78.2

Designed Emg Sp O.K.

Arizona Vineyard Road Dam

GDH 9-3-65

Principal Spillway Layout

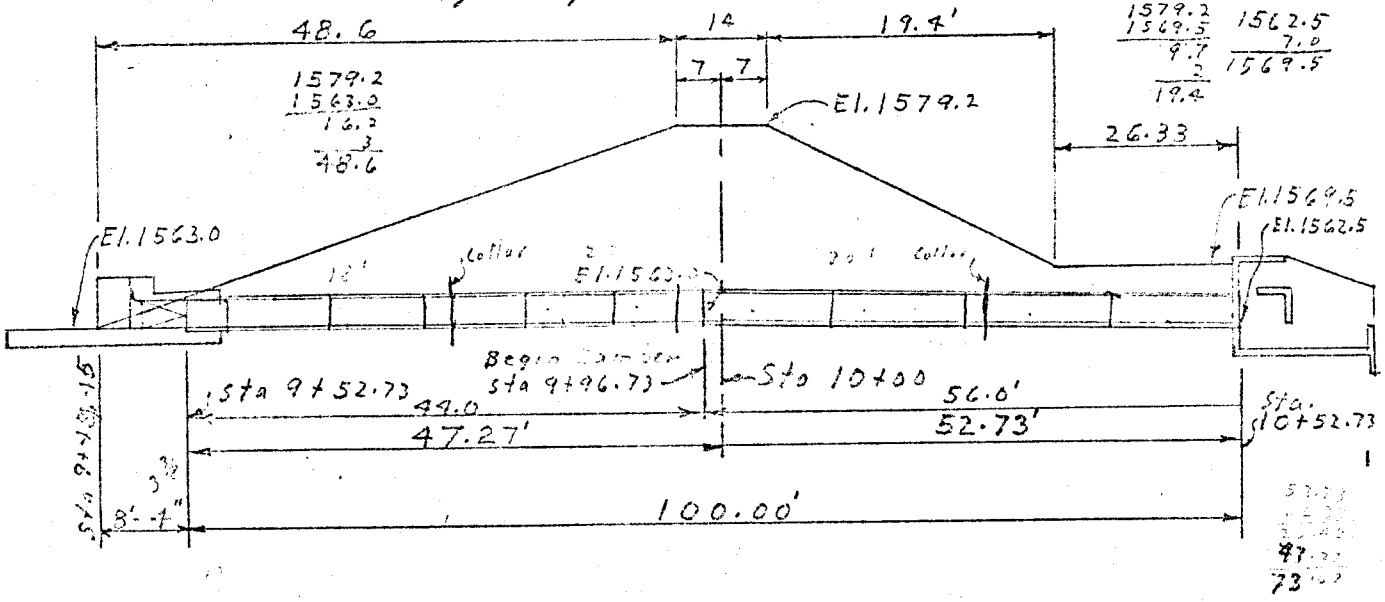

1 Sta.	2 L	3 X	4 X/L	5 $(X/L)^2$	6 e	7 y Col. 5 x 6	8 El.
9+52.73	0	0	0	0	0	0	1563.0
9+96.73	44	44	1	1	0	0	1563.0
10+12.73	56	16	0.28571	0.081630	.50	0.04	1562.96
10+29.73	56	32	0.57142	0.32652	.50	0.16	1562.84
10+44.73	56	48	0.85714	0.73469	.50	0.37	1562.63
10+52.73	56	56	1.0	1.0	.50	0.50	1562.50

Number of cutoff collars ℓ = 47.27 + 26.40 = 73.67 say 74'

V = 2.0'

$n = \frac{0.075\ell}{V} = \frac{0.075 \times 74}{2} = 2.78$ use 3 collars @ 20' c-c

Vineyard Road Principal Railway
Conduit Crossing

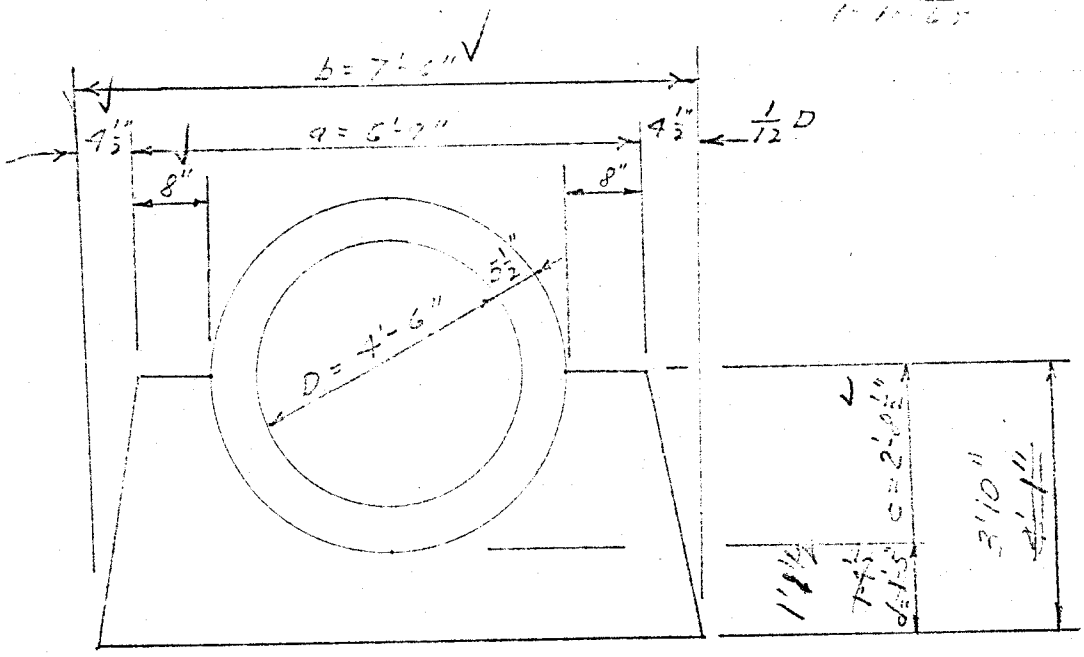

$a = 54 + 11 + 16 = \frac{81}{12} = 6'\text{-}9"$

$\frac{1}{12}\ 54 = 4\frac{1}{2}"$

$b = 6'\text{-}9" + 9" = 7'\text{-}6"$

$c = \frac{54}{2} + 5\frac{1}{2} = \frac{32\frac{1}{2}}{12} = 2'\text{-}8\frac{1}{2}"$ $\quad 2'\text{-}8\frac{1}{2}$

$d = \frac{1}{4}\ D = \frac{1}{4} \times 54 = \frac{13}{12}" = 1'\text{-}5"$ $\quad 1 - 1\frac{1}{2}$ $\quad 4 - 1\frac{1}{2}$ $\quad$ use $1 - 1\frac{1}{2}$ $\quad 3'\text{-}10"$

Collar width $= 7'\text{-}6" + 8' = 15'\text{-}6"$

Arizona — Vineyard Road Dam

GDH 9-8-65 Civil 9-10-65

Anti-Seep collar design

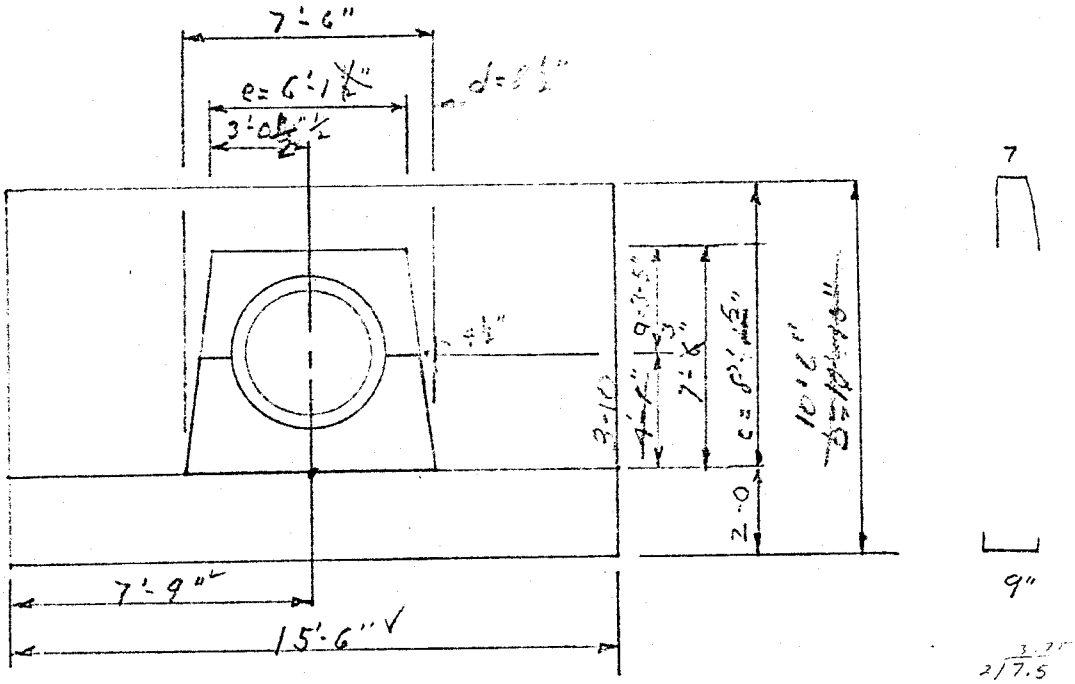

$a = \frac{54+11}{2} + 8" = 40\frac{1}{2}" = 3'-4\frac{1}{2}"$ Call 3'-5"

$b = 3'-10" \times 2'-0" + \left(\frac{54+11}{2}\right) + 2.0 = 10'-6\frac{1}{2}"$ Call 10'-6"

$d = \frac{7.25}{7.5} \times 0.375 = 0.7923$ call $8\frac{1}{2}"$

$e = 7.5 - (2 \times 0.0833) = 6.75 = 6'-1\frac{1}{2}"$ 6'-1"

COMPUTATION SHEET
SCS-522 REV 5-58

U. S. DEPARTMENT OF AGRICULTURE
SOIL CONSERVATION SERVICE

GPO : 1958 O—470868

STATE		PROJECT		
Arizona		Vinyard Road Dam		
BY	DATE	CHECKED BY	DATE	JOB NO.
Watt	6-29-65			

SUBJECT Discharge thru Principal Spillway SHEET ____ OF ____

Elev Top Dam 1578.5 + 1.0 = 1579.5

Elev of principal Spillway Inlet = 63.0
" " " " Outlet = 62.5

Length of Conduit = 3×16.5 + 14 + 2×14 + 20 = 111.5'

Call 112 ft.

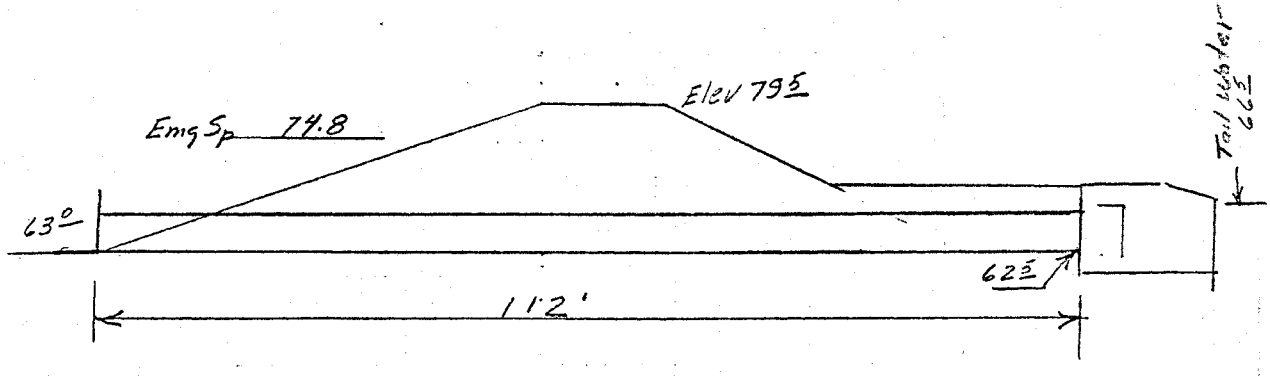

For 48" pipe n=.010 K_f = .00292 A = 12.57

16.90
.00249

Entrance Loss K_e = 0.10 $\frac{V^2}{2g}$

H_f = 112 × .00292 = 0.33 $\frac{V^2}{2g}$

Vel Head = 1.00 $\frac{V^2}{2g}$

Total Head = 1.43 $V^2/2g$

$$Q = \frac{8.02 \times 12.57}{1.43^{1/2}}\sqrt{h} = 84.3\sqrt{h}$$

When h = 8.3 Q = 243 Too Small

COMPUTATION SHEET
SCS-522 REV 5-58

U. S. DEPARTMENT OF AGRICULTURE
SOIL CONSERVATION SERVICE

GPO : 1958 O—470868

STATE		PROJECT		
Arizona		Vinagre Rd		
BY	DATE	CHECKED BY	DATE	JOB NO.
Watt	6-29-65			
SUBJECT				SHEET ____ OF ____

For 54" Pipe $A = 15.90$ $K_f = .00249$ for $n = .010$

Entrance loss = 0.10 hv
$H_f = 112 \times .00249$ = 0.28 hv
Vel head = 1.00 hv
Total H = 1.38 hv

$$Q = \frac{8.02 \times 15.90}{1.38^{1/2}} \sqrt{H} = 108.52 \sqrt{H}$$

For $H = 8.3'$ $Q = 313$ C.F.S.
Close Enough for Eng.
327 used in Flood Routing

$$V = \frac{3.13}{15.90} = 19.7 \text{ ft/sec}$$

For Outlet Use PVD Basin Raise Dimension ① from 5 to 6' because of high tail water 4.25'±. Make bigger wings

COMPUTATION SHEET
SCS-522 REV 5-58

U. S. DEPARTMENT OF AGRICULTURE
SOIL CONSERVATION SERVICE

GPO : 1958 O—470868

STATE Arizona		PROJECT Vineyard Rd Dam		
BY WsH	DATE 7-28-65	CHECKED BY	DATE	JOB NO.
SUBJECT				SHEET ____ OF ____

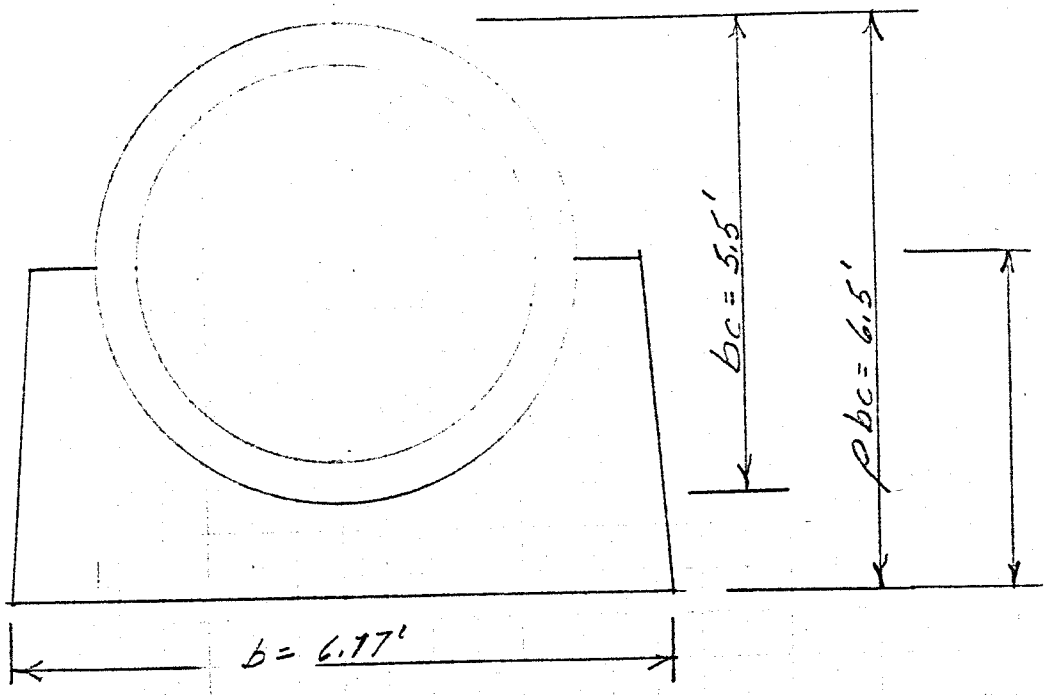

Ht of fill = 18'
γ = 130#/cuft
Kw = 0.19
K = 0.37

$\rho = \frac{6.5}{5.5} = 1.18$

δ = 0.5 for equal conditions of embankment & foundation

$\delta\rho = 1.18 \times .5 = .59$

From E.S. 117

$\frac{He'}{b} = 1.6$ $\quad \frac{He}{b} = \frac{18}{6.5} = 2.8$

Incomplete condition

COMPUTATION SHEET
SCS-522 REV 5-58

U. S. DEPARTMENT OF AGRICULTURE
SOIL CONSERVATION SERVICE

GPO : 1958 O—470868

STATE		PROJECT		
Arizona		Vineyard Rd Dam		
BY	DATE	CHECKED BY	DATE	JOB NO.
Wath	7-28-65			
SUBJECT				SHEET ____ OF ____

$2K_w S_p = 2 \times .19 \times .59 = .224$

$2K_w \frac{H_c}{b_c} = .38 \times \frac{18}{5.5} = .38 \times 3.27 = 1.24$

From E.S. 118

$2K_w C_p = 3.0$

$C_p = \frac{20}{13.5} = 5.26$

From ES 12.1 $T = 2.4$

For Cradle $X_p = 0.400$

$F_{sr} = C_p X_p - KT = 5.26 \times .40 - .37 \times 2.40 = 1.21$

$SYF_{sr} = 130 \times 1.33 \times 1.21 = 209.$

$Rep = \frac{b_c^2 SYF_{sr}}{1.431} = \frac{5.5^2 \times 209}{1.431} = 4420\#$

Use Class III Pipe

Dload = $1320 \times 4.15 = 5800\#$

1350

COMPUTATION SHEET
SCS-522 REV 5-58

U. S. DEPARTMENT OF AGRICULTURE
SOIL CONSERVATION SERVICE

GPO : 1958 O—470868

STATE		PROJECT		
Arizona		Villard Rd Dam		
BY	DATE	CHECKED BY	DATE	JOB NO.
Watt	7-28-65			
SUBJECT				SHEET ____ OF ____
Settlement Computations				

Hole 301 0.0 - 5.0 SM
5.0 - 10.0 G.P.
10 - 0 Siltstone

Elev Gr. Surface 64.3
Btm Cradle 61.8
2.5'

Density of Fill = 135 #/ft^3
Ht. of Fill 17.4'
b = 17.4 x 5 + 14 = 101 ft

$\frac{17.4 \times 135}{2000}$ = 1.2 Tons/ft

Dry Density in place material 95
Moist Density 107 (assumed)

a $p_o = \frac{3.5 \times 105}{200}$ = 0.2 Ave = 0.1

p_o $\frac{4.0 \times 105}{200}$ = 0.2 Ave = 0.2 + 0.1 = 0.3

ΔP @ =

COMPUTATION SHEET
SCS-522 REV 5-58

U. S. DEPARTMENT OF AGRICULTURE
SOIL CONSERVATION SERVICE

GPO 1958 O—470868

STATE		PROJECT		
Arizona		Vinyard Rd Dam		
BY	DATE	CHECKED BY	DATE	JOB NO.
WaH	7-28-65			

SUBJECT Settlement Computations — SHEET ____ OF ____

Sample	Depth	H	P_o	ΔP	$P_o+\Delta P$	e_o	e_f	e_o-e_f	$\frac{\Delta P}{1+e_o}$	ΔS
301-1	4.2	3.5	0.1	1.2	1.3	0.75	.64	.11	.063	0.22
1,	8.0	4.0	0.3	1.1	1.4	0.75	.635	.115	.066	0.26

S = Total = 0.48

Elongation of Conduit By T.H. -18

$b/d = \frac{101}{7.5} = 13.5$

$\frac{b}{h} = \frac{101}{17.5} = 5.7$

$R = 0.19$

$\delta/d = \frac{.48}{7.5} = .064$

$g_s = .064 \times 10 \times 12 \times .19 = 1.46''$

$a = \frac{2 \times .48}{101} = .0095$

$g_r = \frac{.0095 \times 60}{2} = 0.28$

Total = 1.46 + 0.28 = 1.74

I don't believe it. on all our conduits we have measured more than 1/2" cracks.

Arizona Vineyard Road

GDH 11-17-65

Principal Spillway Inlet.

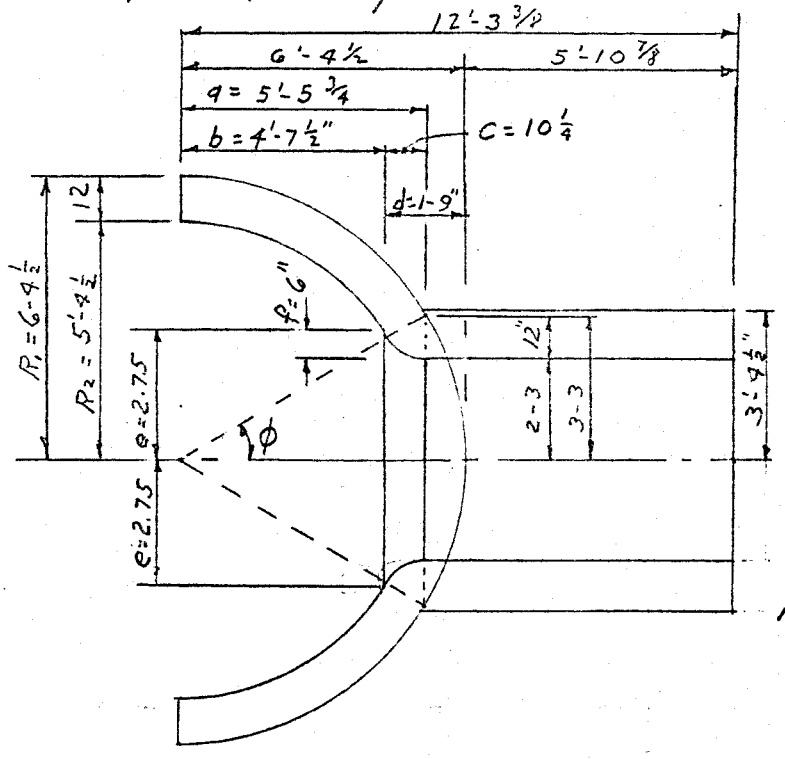

$\sin\phi = \frac{3.25}{6.375} = 0.5098 = 30°39'02"$

$a = 6.375 \cos 30°39'02" = 5.48436$ (0.860293)

$b = 5.375 \times 0.860293 = 4.62407$

$c = a - b = 0.86029$

$d = 6.375 - 4.62407 = 1.75$

Adjust ϕ using 5'-5 3/4 = a and 6'-4 1/2"

$\cos\phi = \frac{5.4792}{6.375} = 0.85948$

Adj $\phi = 30° 44' 31"$

$e = 5.375 \sin 30° 44' 31" = 2.75$ (0.511172 25)

$f = e - 2.25 = 0.50$

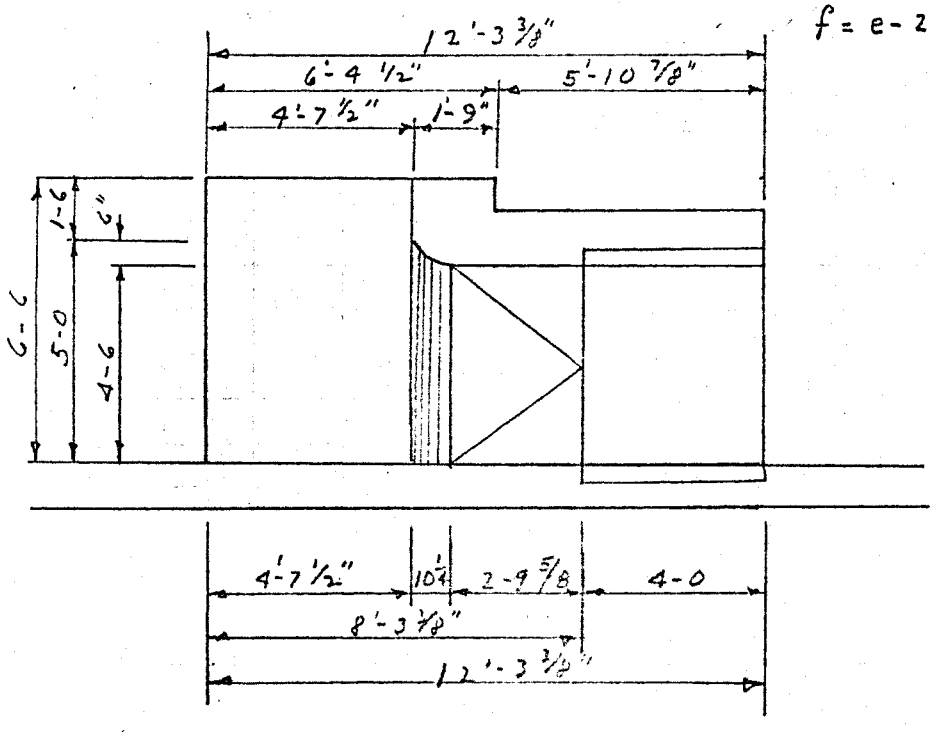

Check Inlet Dimensions by Scott 1-28-66

$$\frac{3.25}{6.375} = \frac{a}{5.375}$$

$$a = 2.74'$$

$$5.375^2 - 2.74^2 = (5.375 - b)^2$$

$$-2.74^2 = -10.75b + b^2$$

$$b = \frac{10.75 \pm \sqrt{10.75^2 - 4 \times 2.74^2}}{2}$$

$$b = 0.751$$

$$1 + b = 1.751 = 1'9''$$

$$5.375 - .751 = 4.624$$

$$\frac{X}{1.0} = \frac{4.624}{5.375} = 0.860$$

$$= 10.32''$$

$$10\tfrac{1}{4}''$$

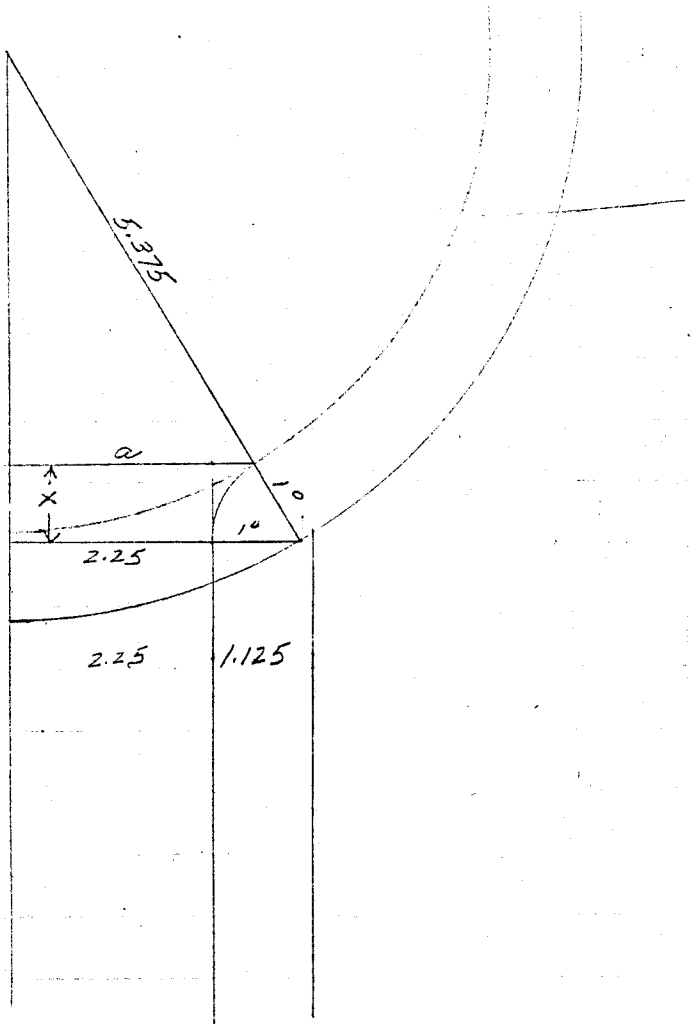

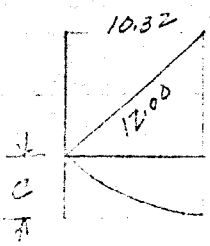

$$12^2 - 10.32^2 = (12 - C)^2 = 12^2 - 24C + C^2$$

$$C^2 - 24C + 10.32^2 = 0$$

$$C = \frac{+24 \pm \sqrt{24^2 - 4 \times 10.32^2}}{2}$$

$$5.88''$$

$$= 5\tfrac{7}{8}''$$

COMPUTATION SHEET
SCS-522 REV 5-58

U. S. DEPARTMENT OF AGRICULTURE
SOIL CONSERVATION SERVICE

GPO 1958 O—470868

STATE		PROJECT		
Arizona		Vineyard Road Dam		
BY	DATE	CHECKED BY	DATE	JOB NO.
Watt	2-1-66			

SUBJECT Check on Inlet Foundation

SHEET ____ OF ____

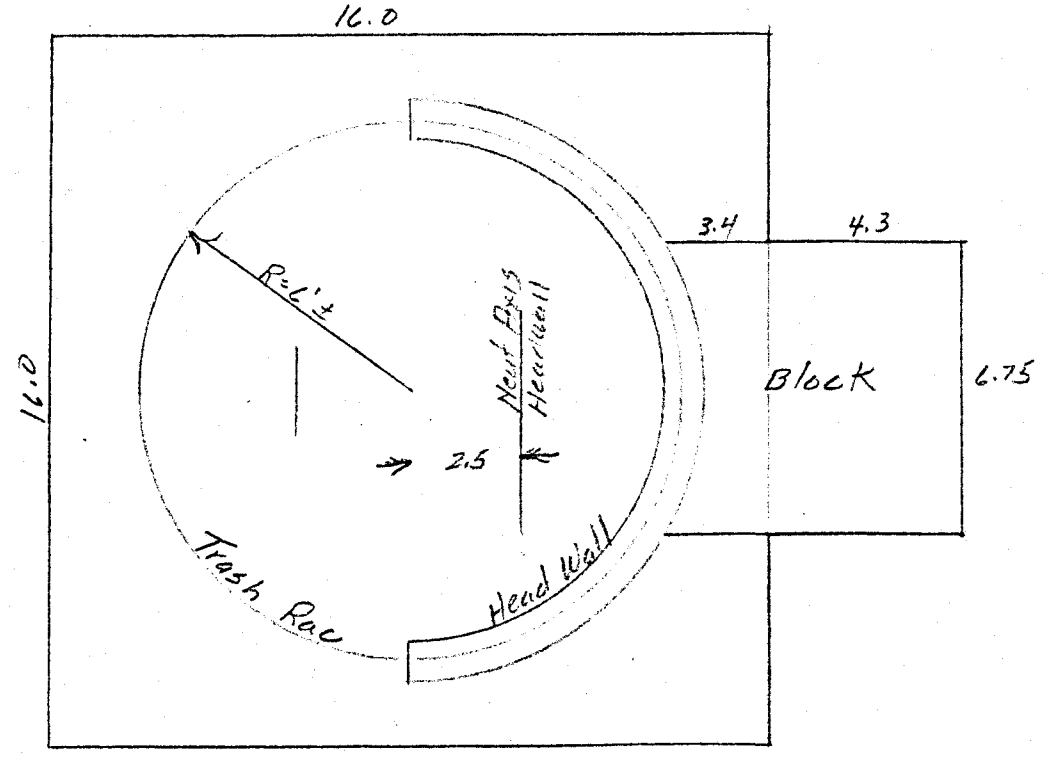

COMPUTATION SHEET
SCS-522 REV 5-58

U.S. DEPARTMENT OF AGRICULTURE
SOIL CONSERVATION SERVICE

GPO : 1958 O—470868

STATE		PROJECT		
Arizona		Kinyaid Ed Dam		
BY	DATE	CHECKED BY	DATE	JOB NO.
Watt	2-1-66			

SUBJECT Check on Inlet Foundation Inlet Floor Slab

SHEET ____ OF ____

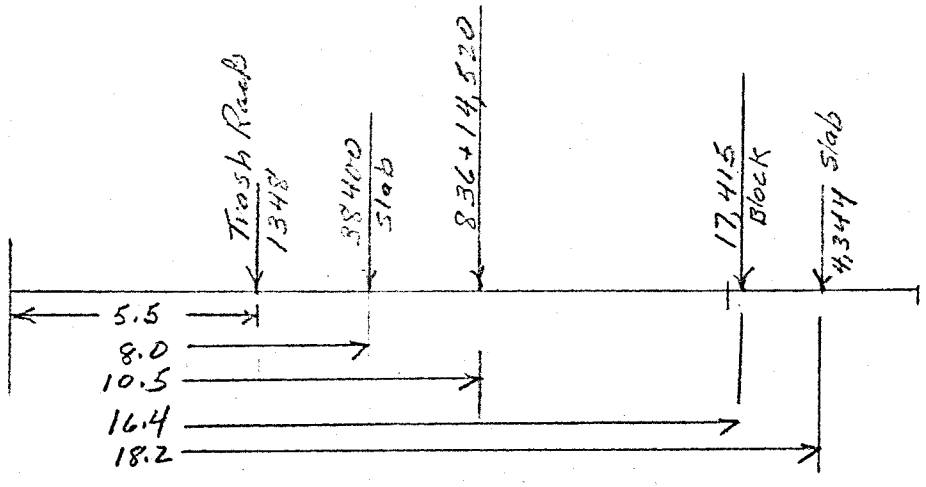

Resultant at

$$\frac{1348 \times 5.5 + 38400 \times 8.0 + (836 + 14520)\,10.5 + 17415 \times 16.4 + 18.2 \times 4344}{\Sigma F = 76{,}863}$$

$$= \frac{840518.8}{76{,}863} = 10.94$$

COMPUTATION SHEET
SCS-522 REV 5-58

U. S. DEPARTMENT OF AGRICULTURE
SOIL CONSERVATION SERVICE

GPO : 1958 O—470868

STATE Arizona		PROJECT Vineyard Rd Dam		
BY Watt	DATE 7-12-65	CHECKED BY	DATE	JOB NO.
SUBJECT Vineyard Rd Dam Inlet Structure				SHEET ____ OF ____

Btm of inlet = 1563.0
Crest of Emg Spillway = 1574.8
Top of Dam = 1579.2 (Inc. 1.0 for Settlement)
Top of silt Pool 1566.2
Size of Princ. Sp. 54" Pipe
Max Q = 313 C.F.S.

For Q of 313 CFS & Vel of 1'/sec

A = 313 Sq ft.

Ht of opening = 74.8 - 66.2 = 8.5'

$$\text{Circum} = 313/8.5 = 36.82 \text{ ft}$$

$$D = \frac{36.82}{3.14} = 11.7 \text{ ft}$$

Call 12'0" Diam

Max Spacing 2/3 of 4.5' = 3.0 ft

$$\frac{36.82}{3} = 12.3 \text{ Spaces call } 13$$

$$\frac{12 \times 3.1416}{13} = 2.90 \text{ ft} = 2'10\ 3/4"$$

Ht = 74.8 - 63.0 + 1.0 = 12.8 Call 13.0'

COMPUTATION SHEET
SCS-522 REV 5-58

U.S. DEPARTMENT OF AGRICULTURE
SOIL CONSERVATION SERVICE

GPO : 1958 O—470868

STATE Arizona		PROJECT Vineyard Rel Dam		
BY Watt	DATE 2-1-66	CHECKED BY	DATE	JOB NO.
SUBJECT Floor Slab on Inlet Str				SHEET ____ OF ____

Wt Trash Rack

Long ½

Pipe 6×14×10.25	=		861 lbs
Base L 17.8×6.1	=		109
H Beam 2×18(6.7+3.8)	=		378
		Sub-Total	1348

Short ½

Pipe 7×7.5×10.25	=		538
Base L 17.8×6.1	=		109
H Beam 18×10.5	=		189
		Sub-Total	836

Total 2186

Wt Conc (Yardage From Conc. Comp.)

Slab - 16×16×150	=	38,400
4.29×6.75×150	=	4,344
Block = (264.7+148.6)150	=	17,415
Headwall (96.8)150	=	14,520
Total		76,865

Center gravity ½ Ring 12' Diam
= .42×6 = 2.5

94
-120
5.04

COMPUTATION SHEET
SCS-522 REV 5-58

U. S. DEPARTMENT OF AGRICULTURE
SOIL CONSERVATION SERVICE

GPO . 1958 O—470868

STATE		PROJECT		
Arizona		Vineyard Rd Dam		
BY	DATE	CHECKED BY	DATE	JOB NO.
Hiatt	7-15-65			

SUBJECT
Steel in Inlet Str

SHEET ____ OF ____

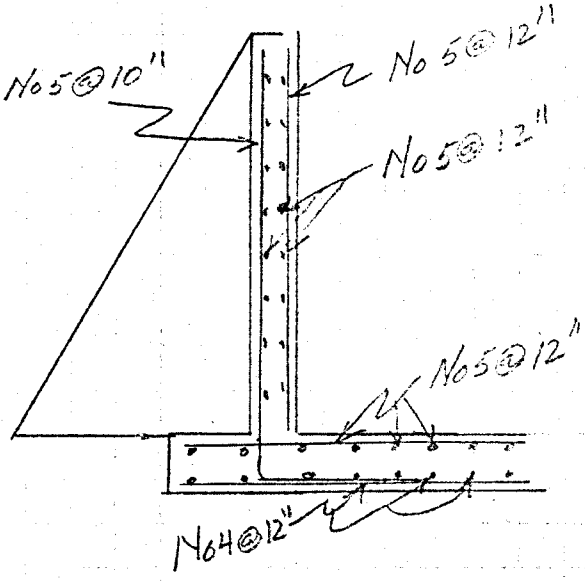

Assume Earth +

Soil 100#/ft
Voids 39%

Bougant wt Soil
100 - .61 x 62.5 = 62#/ft
Hydrostatic Wt 62.5

Total 124.5
Call 125#/ft

If Wall Cantelever from floor

$$M = \frac{6.6^3 \times 125}{6} = 5990 \text{ ft lbs}$$

For 12" Wall $d = 9\frac{1}{2}$" $A_s = .3d$

No's 12 @ 6"
No 5 @ 10"

Temp Steel No 5 @ 13" Exposed
4 @ 12" Unexposed Face

COMPUTATION SHEET
SCS-522 REV 5-58

U. S. DEPARTMENT OF AGRICULTURE
SOIL CONSERVATION SERVICE

GPO 1958 O—470868

STATE		PROJECT		
Arizona		Village Rd Dam		
BY	DATE	CHECKED BY	DATE	JOB NO.
Watt	2-1-66			

SUBJECT Check on Inlet Foundation — SHEET ____ OF ____

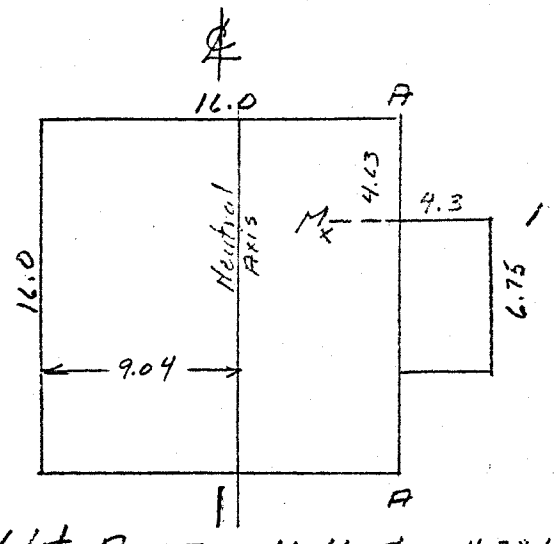

$$\text{Neut Axis} = \frac{16\times16\times8 + 4.3\times6.75\times18.25}{16\times16 + 4.3\times6.75} =$$

$$\frac{2577.70}{285} = 9.04$$

$$I_T = \frac{16\times16^3}{12} + 16\times16(9.04-8)^2 + \frac{6.75\times4.3^3}{12} + 6.75\times4.3\times9.11^2$$

$$5461 + 277 + 48 + 95 + 2409 = 8290\ ft^4$$

1015
104
911

$$M = 76{,}863\,(10.94-9.04) = 146040$$

$$S = \frac{Mc}{I} = \frac{146{,}040}{8290}\times 9.04 = 160\ \#/ft^2$$

$$\frac{146{,}040}{8290}\times 11.26 = 198\ \#/ft^2$$

$$P = \frac{76{,}863}{285} = 269.7\ \#/ft^2$$

$P_{max} = 270+198 = 468\ \#$

$P_{min} = 270-160 = 110\ \#$

COMPUTATION SHEET
SCS-522 REV 5-58

U. S. DEPARTMENT OF AGRICULTURE
SOIL CONSERVATION SERVICE

GPO : 1958 O—470868

STATE		PROJECT		
Arizona		Vinyard Road Dam		
BY	DATE	CHECKED BY	DATE	JOB NO.
Watt	2-1-66			

SUBJECT
Moments on Inlet Foundation Slab. SHEET ____ OF ____

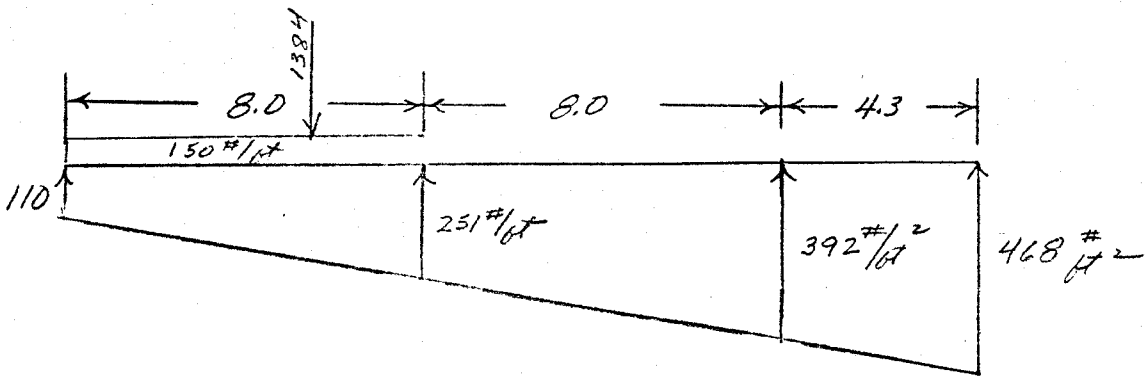

$(468-110)\frac{16}{20.3}+110 = 392\ \#/ft^2$

$(468-110)\frac{8}{20.3}+110 = 251\ \#/ft^2$

$M_{\text{@}} = 110\times8\times4 + \frac{141\times8}{2}\times\frac{8}{3} - 150\times8\times4 - \frac{1384}{16}\times2.5 =$

$= 3520 + 1504 - 4800 - 216 = 8\ ft\text{-}lbs/ft$
negligible

$M_x = (392-150)\,4.3 = 1040\ ft\text{-}lbs$

Use Min Temp Steel in foundation.

COMPUTATION SHEET
SCS-522 REV 5-58

U. S. DEPARTMENT OF AGRICULTURE
SOIL CONSERVATION SERVICE

GPO : 1956 O—470868

STATE		PROJECT		
Arizona		Hayward Rd. Dam.		
BY	DATE	CHECKED BY	DATE	JOB NO.
Watt	7-12-65			

SUBJECT Trash Rack Design

SHEET ____ OF ____

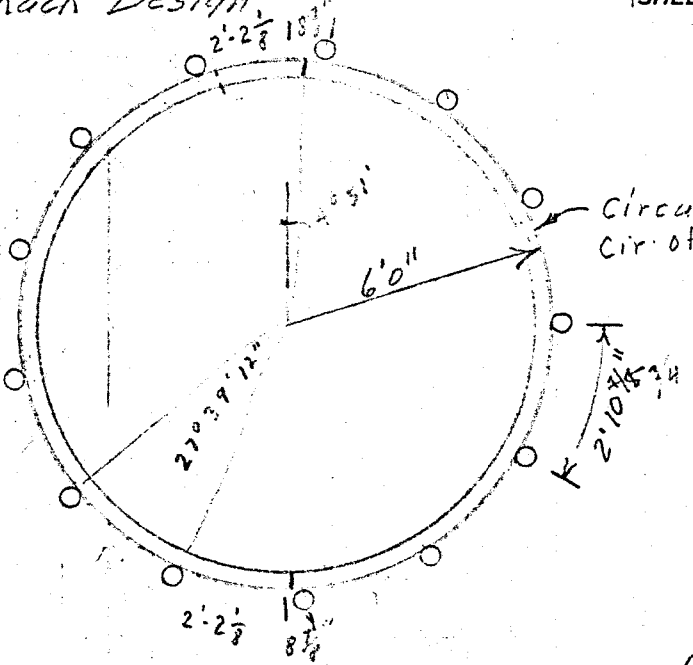

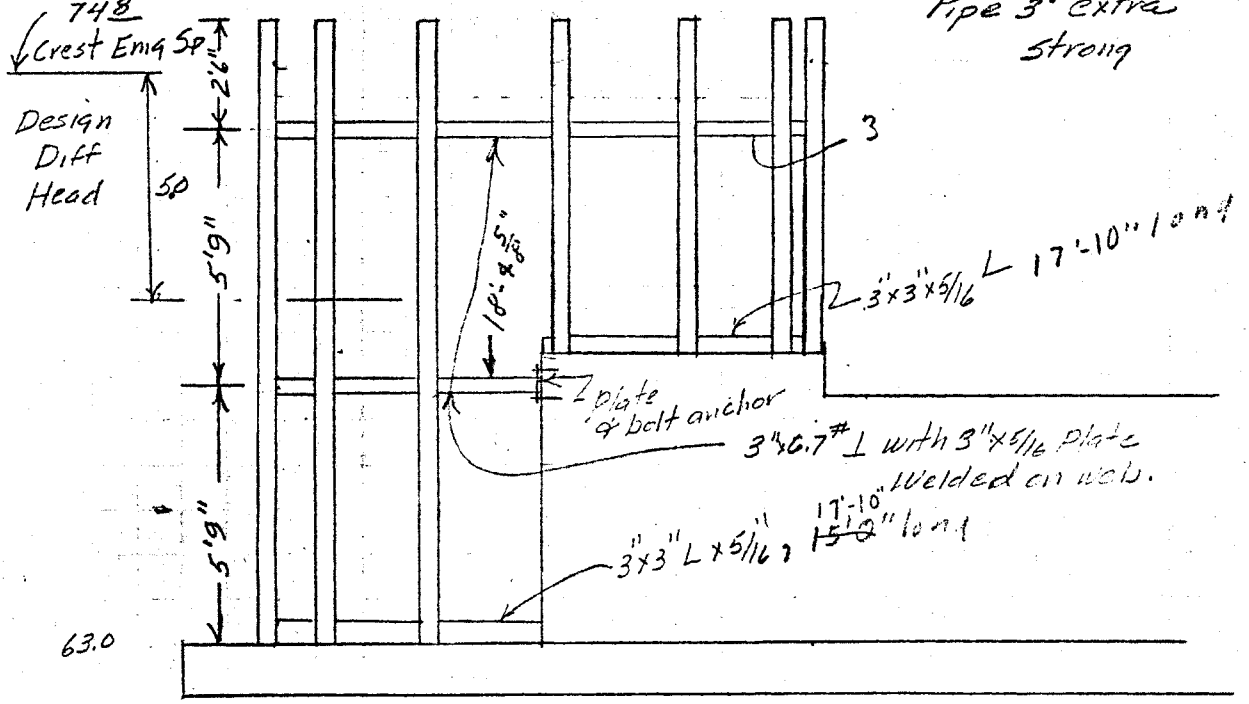

Pipe 3" extra strong

COMPUTATION SHEET
SCS-522 REV 5-58

U. S. DEPARTMENT OF AGRICULTURE
SOIL CONSERVATION SERVICE

GPO . 1958 O—470868

STATE		PROJECT		
Arizona		Vineyard Rd Str		
BY	DATE	CHECKED BY	DATE	JOB NO.
Watt	7-13-65			

SUBJECT
Trash Rack Design

SHEET ____ OF ____

Assuming Center Ring is hinged Arch and one half has 5' hydrostatic load & other half has 2.5' hydrostatic load.

(Don't know how it could happen)

Space loads equally around arch at vertical pipes.

COMPUTATION SHEET
SCS-522 REV 5-58

U. S. DEPARTMENT OF AGRICULTURE
SOIL CONSERVATION SERVICE

GPO : 1958 O—470868

STATE Arizona		PROJECT Vineyard		
BY Watt	DATE 7-12-65	CHECKED BY	DATE	JOB NO.
SUBJECT Trash Rack				SHEET ____ OF ____

Size of Vertical Pipes Spacing = 2.9'
Load = 5.0' differential head
$= 5 \times 62.5 = 313\ \#/ft^2$

Load per lineal ft $= 313 \times 2.9 = 906\ \#/ft$

Assume Simple span

$$M = \frac{wl^2}{8} = \frac{900}{8} l^2$$

$$l = \sqrt{\frac{8}{900} \times M} = .0943\sqrt{M}$$

For 3" extra strong $S = \frac{I}{c} = \frac{3.894}{1.75} = 2.23$

$$M = \frac{20{,}000 \times 2.23}{12} = 3717$$

$$l = .0943\sqrt{3717} = 5.75\ ft$$

COMPUTATION SHEET
SCS-522 REV 5-58

U. S. DEPARTMENT OF AGRICULTURE
SOIL CONSERVATION SERVICE

GPO : 1958 O—470868

STATE		PROJECT		
Arizona		Kingman Rd Dam		
BY	DATE	CHECKED BY	DATE	JOB NO.
Watt	7-13-65			

SUBJECT Trash Rack Design

SHEET ____ OF ____

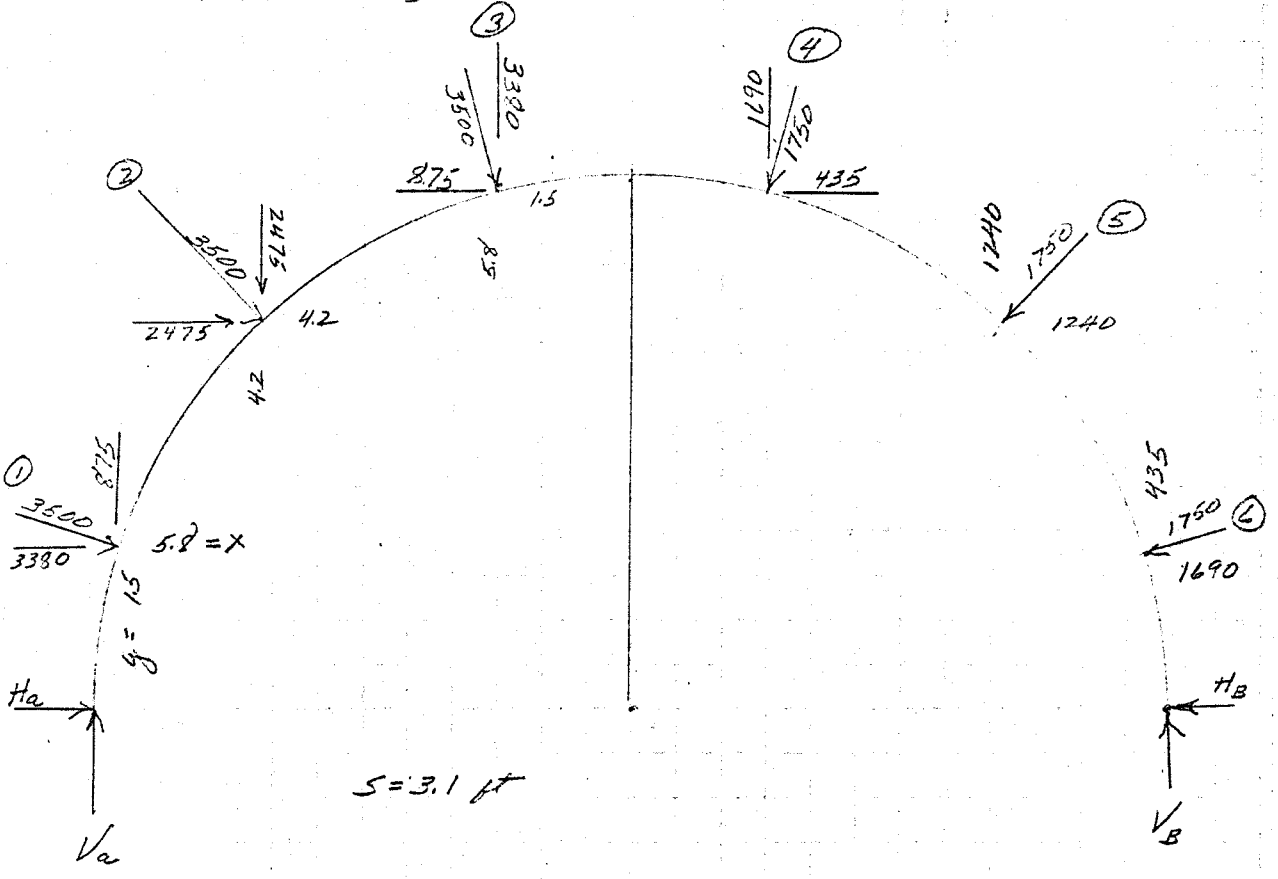

S = 3.1 ft

ΣF_x

$-H_a + H_B = 3380 + 2475 + 875 - 435 - 1240 - 1690 = 3365$

$-H_a + H_B = 3365$

$\Sigma F_y \quad V_a + V_B = 875 + 2475 + 3380 + 1690 + 1240 + 435 = 10{,}095$

$V_a + V_B = 10{,}095$

$\Sigma M_a \quad V_B \times 12 + 1690 \times 1.5 + 1240 \times 4.2 + 435 \times 5.8 - 435 \times 11.8 - 1240 \times 10.2$

$- 1690 \times 7.5 - 875 \times 5.8 - 2475 \times 4.2 - 3380 \times 1.5 - 3380 \times 4.5$

$- 2475 \times 1.8 - 875 \times 0.2$

$12 V_B = 605700 \quad V_B = 5046$

all forces go through center
so $V_a = V_B$

$V_a = 10095 - 5046 = 5049$

COMPUTATION SHEET
SCS-522 REV 5-58

U. S. DEPARTMENT OF AGRICULTURE
SOIL CONSERVATION SERVICE

GPO : 1958 O—470868

STATE		PROJECT		
Arizona		Vinagre Rd Dam		
BY	DATE	CHECKED BY	DATE	JOB NO.
WAH	7-13-65			

SUBJECT Trash Rack Design

SHEET ____ OF ____

ΣF_y

$(4880 + .25H)$ 1.5	=	$7320 + .37H_B$
$(3540 + .71H)$ 4.2		$14863 + 2.98H$
$(3670 + .97H)$ 5.8		$21,286 + 5.62H$
$(2830 + .97H)$ 5.8		$16,414 + 5.62H$
$(2960 + .71H)$ 4.2		$12,432 + 2.98H$
$(3960 + .25H)$ 1.5		$5940 + .37H$
Total		$78,260 + 17.94H$

$$\Sigma -\frac{Mgds}{I} + \Sigma\frac{Fdy}{A} - \Sigma\frac{Fyds}{PA} = 0$$

$$-\frac{3.1(107.06H - 205,228)}{I} + \frac{40,702 + 9.34H}{A} - \frac{3.1}{6A}(78,260 + 17.94H) = 0$$

(Negligible)

$$\frac{636,207 - 331.88H}{I} + \frac{727 + .07H}{A} = 0$$

$$H_B = \frac{636,207}{332} = 1916\ \#$$

$$H_A = -3365 + 1916 = 1449\ \#$$

COMPUTATION SHEET
SCS-522 REV 5-58

U. S. DEPARTMENT OF AGRICULTURE
SOIL CONSERVATION SERVICE

GPO : 1958 O—470868

STATE	PROJECT		
Arizona	Vinyard Rd Dam		
BY: Watt	DATE: 7-13-65	CHECKED BY	DATE	JOB NO.

SUBJECT: Trash Rack Design

SHEET ____ OF ____

Comp. + Tension −

	ΣF_x H_B+	ΣF_y		$F(x)$		$F(y)$	Total (F)
6	1690	+4615	$\frac{1.5}{6}$	420	$\frac{5.8}{6}$	4460	$4880 + .25 H_b$
5	2930	+3375	.707	2070	.707	1470	$3540 + .71 H_b$
4	3365	+1685	$\frac{5.8}{6}$	3250	$\frac{1.5}{6}$	420	$3670 + .97 H_b$
3	2490	−1695	$\frac{5.8}{6}$	2410	$-\frac{1.5}{6}$	420	$2830 + .97 H_b$
2	15	−4170	.707	10	−.707	2950	$2960 + .71 H_b$
1	−3365	+5050	$\frac{1.5}{6}$	−840	$-\frac{5.8}{6}$	4800	$3960 + .25 H_b$

$F \quad \overset{3.1\times}{dx} \quad F dx$

$(4880 + .25 H_b)\, 3.1 \times .25 = 3782 + .19 H$

$(3540 + .71 H)\, 3.1 \times .71 = 7791 + 1.56 H$

$(3670 + .97 H)\, 3.1 \times .97 = 11{,}035 + 2.92 H$

$(2830 + .97 H)\, 3.1 \times .97 = 8510 + 2.92 H$

$(2960 + .71 H)\, 3.1 \times .71 = 6515 + 1.56 H$

$(3960 + .25 H)(3.1 \times .25) = 3069 + .19 H$

$\Sigma F dx \quad 40{,}702 + 9.34 H_B$

COMPUTATION SHEET
SCS-522 REV 5-58

U. S. DEPARTMENT OF AGRICULTURE
SOIL CONSERVATION SERVICE

GPO 1958 O—470868

STATE		PROJECT		
Arizona		Vineyard Rd Dam		
BY	DATE	CHECKED BY	DATE	JOB NO.
Wall	7-13-65			
SUBJECT				SHEET ____ OF ____
Trash Rack Design				

$\Delta X = 0$

Bryan Johnson Part 2 Page 132

$$-\Sigma \frac{My\,ds}{\Sigma I} + \frac{F\,dx}{\Sigma A} - \frac{F\,y\,ds}{\Sigma pA} = 0$$

My @6

$1.5(1.5H_b - .2\times 5050) = (1.5H_p - 1010)1.5 = 2.25H_p - 1515$

@5

$= (4.2H_b - 1.8\times 5050 + 1690\times 2.7 + 435\times 1.6)4.2$

$= (4.2H_b - 3831)4.2 = 17.64H_b - 16{,}090$

@4

$5.8(5.8H_b - 4.5\times 5050 + 1690\times 4.3 + 435\times 4.3 + 1240\times 2.7 + 1240\times 1.6)$

$= 5.8(5.8H_b - 8255) = 33.64H - 47{,}880$

@3

$= 5.8(5.8H_b - 7.5\times 5050 + 1690\times 4.3 + 435\times 7.3 + 1240\times 1.6 + 1240\times 5.7 + 1690\times 3.0) = 5.8(5.8H - 13{,}310)$

$= 33.64H - 77{,}198$

@2

$= 4.2(4.2H - 10.2\times 5050 + 2.7\times 1690 + 10.0\times 435 + 8.4\times 1240 + 1690\times 5.7 - 435\times 1.6 + 1.6\times 875 + 27\times 3380) =$

$= 4.2(4.2H - 12{,}718) = 17.64H - 53{,}416$

@1

$= 1.5(1.5H - 11.8\times 5050 + 11.6\times 435 + 10.0\times 1240 - 2.7\times 1240 + 7.3\times 1690 - 4.3\times 435 + 4.3\times 3380 + 4.3\times 875 + 2.7\times 2475 + 1.6\times 2475) = 1.5(1.5H - 6086)$

$= 2.25H - 9129$

ΣMy Total $= 107.06H_b - 205{,}228$

COMPUTATION SHEET

SCS-522 REV 5-58

U. S. DEPARTMENT OF AGRICULTURE

SOIL CONSERVATION SERVICE

GPO 1958 O—470205

STATE Arizona		PROJECT [illegible] Dam		
BY [illegible]	DATE 7-13-65	CHECKED BY	DATE	JOB NO.
SUBJECT [illegible]				SHEET ____ OF ____

Sec	Moments [illegible]		
[illegible]	1.5×1916 -1010	+1[illegible]	[illegible]
[illegible]	4.[illegible]×1916 -3[illegible]	+[illegible]	"
[illegible]	5.[illegible]×1916 -8[illegible]	+[illegible]	"
[illegible]	5.8×1916 -13310	-[illegible]	"
[illegible]	4.2×1916 -12,[illegible]	-4671	"
[illegible]	1.5×1916 -6086	-3212	"

Check
1.5×1449 + .2×5050
= 3183 ft lbs.
Pretty Close

$S = \frac{4671 * 12}{[illegible]} = 2.8$

For 3" T 6.7# [illegible] [illegible] [illegible]

A = 2.90 I = 5.02 [illegible]

$S = 5.02 / 1.65 = 3.0$ OK for [illegible]

Use 3×3×5/16 L on [illegible]

COMPUTATION SHEET
SCS-522 REV 5-58

U. S. DEPARTMENT OF AGRICULTURE
SOIL CONSERVATION SERVICE

GPO : 1958 O—470868

STATE		PROJECT		
Arizona		Vineyard Rd Dam		
BY	DATE	CHECKED BY	DATE	JOB NO.
Watt	7-15-65			

SUBJECT
Trash Rack Design

SHEET ____ OF ____

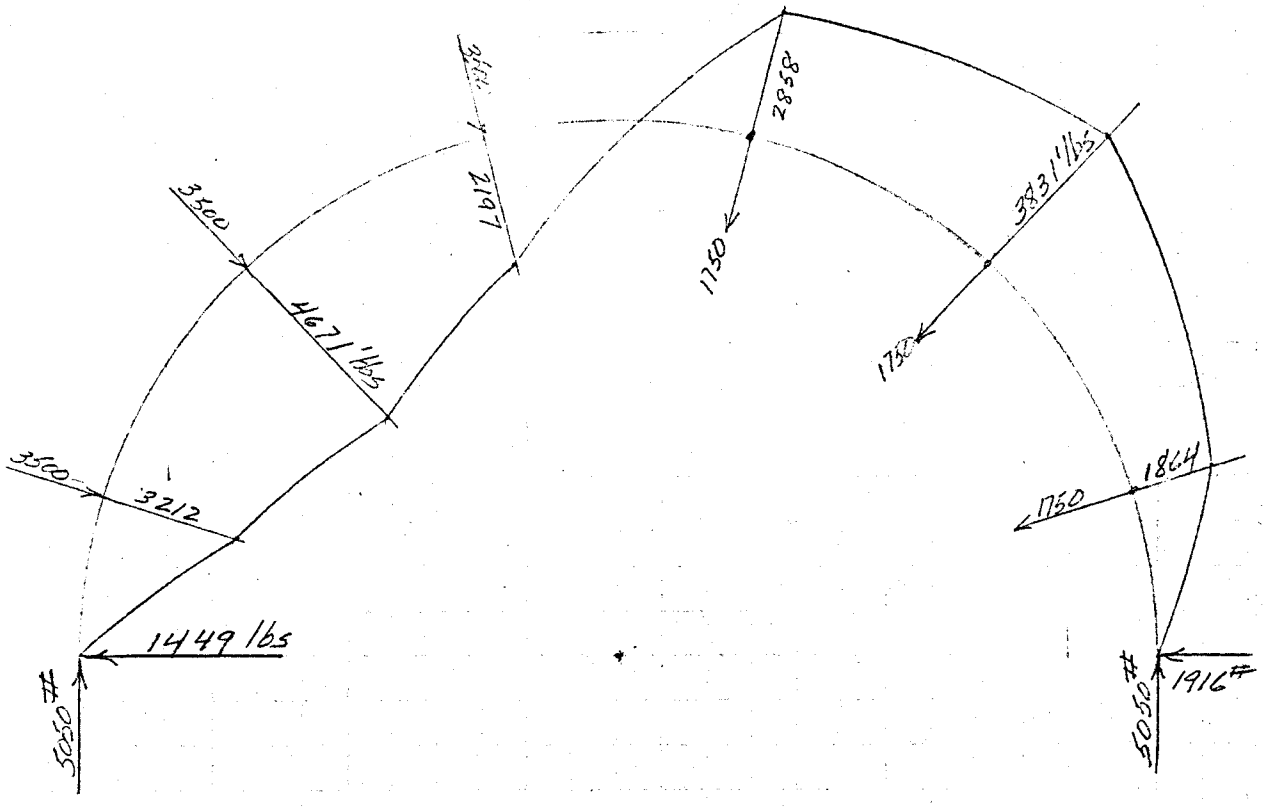

Moment Diagram

Arizona Vineyard Road Dam

GDH 9-15-65

Trash Rack anchorage bolt Layout.

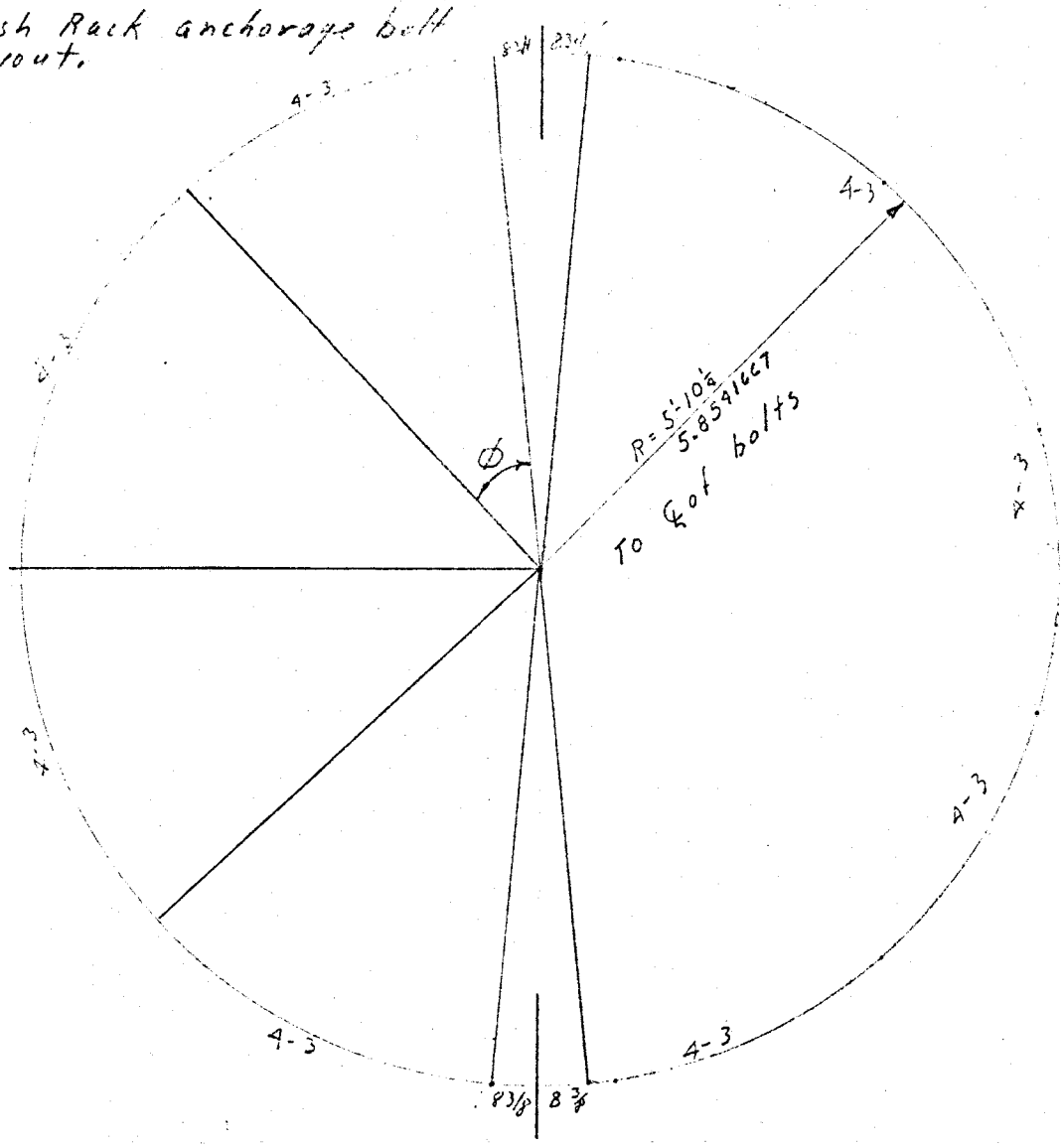

Circumference = (2)(3.1415927)(5.8541667) = $\frac{36.7828147}{2}$ = 18.3914' = 18'-4 3/4"

use 5 bolts in each half @ 3'-4" c-c

$\Phi = \frac{180 \times 4.25}{3.14159 \times 5.85417} = \frac{765}{18.391402} = 41.5955°$ use 42°

Arizona — Powerline Channel & Vineyard outlet channel to sta 11+50

GOH 9-7-61

Riprap Section of channel.

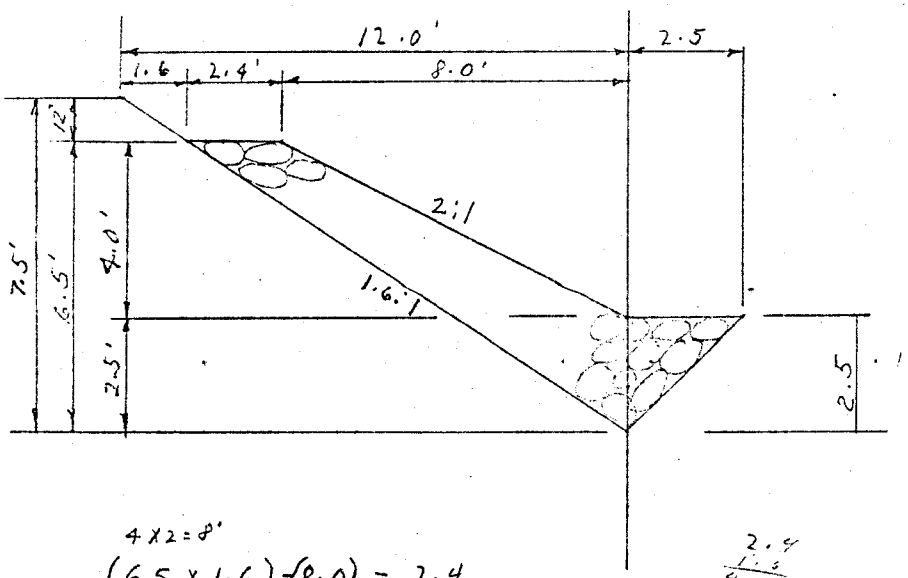

4 X 2 = 8'

(6.5 X 1.6) - (8.0) = 2.4

7.5 X 1.6 = 12.0

2.4
1.6
4.0
8.0
12.0

℄ 24' wide channel to ℄ Access Road:

12.0' + 12.0' + 6.5' = 30.5' 30'-6"

℄ 40'- wide channel to ℄ access Road.

20 + 12 + 6.5 = 38.5'

℄ 50' wide channel to ℄ access road

25 + 12 + 6.5 = 43.5

Arizona Vineyard Dam

G.O.H. 4-15-65

Backwater curves in outlet channel

To Vineyard Rd. Sty

$Q = 360$ $n = 0.030$ Dat Jnct = 3.80 $n^2(R-L) = .09$ $S = .000$

S.S. = 2:1

From Powerline Comp.

Dist. from Jnct.	Depth-ft. 40' Channel	Depth 32' Channel
0	3.80	3.80
200	3.88	3.85
400	3.93	3.91
600	4.01	3.97
800	4.09	4.01
1000	4.14	4.07
1400	4.25	4.15

For Q = 320 CFS

	40' Ch.
0	3.80
200	3.86
400	3.91
600	3.95
800	4.00
1000	414
1200	4.17
1400	4.22

Tail Water P.W.D.

Use 40' Channel

COMPUTATION SHEET
SCS-522 REV 5-58

U. S. DEPARTMENT OF AGRICU_
SOIL CONSERVATION SERVICE

GPO : 1958 O—470868

STATE Arizona		PROJECT Vineyard Dam		
BY Watt	DATE	CHECKED BY	DATE	JOB NO.
SUBJECT Impact Basin.				SHEET ____ OF ____

$Q = 312$

By "Design of Small Dams

$W = 16'$ $\quad L = \frac{16 \times 4}{3} = 21.33'$

$.58W = .58 \times 16 = 9.3$ Make 9'0"

$\frac{W}{6} = \frac{16}{6} = 2.66 = 2'8"$

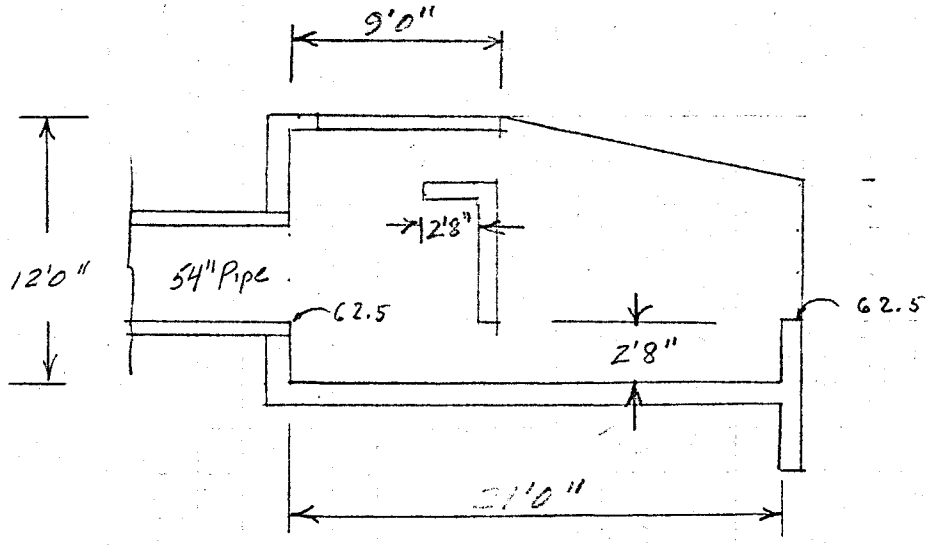

COMPUTATION SHEET
SCS-522 REV 5-58

U. S. DEPARTMENT OF AGRICULTURE
SOIL CONSERVATION SERVICE

GPO 1958 O—470868

STATE		PROJECT		
Arizona		Vingard Rd Dam		
BY	DATE	CHECKED BY	DATE	JOB NO.
Watt	7-1-65			

SUBJECT PWD Basin for Outlet — SHEET ____ OF ____

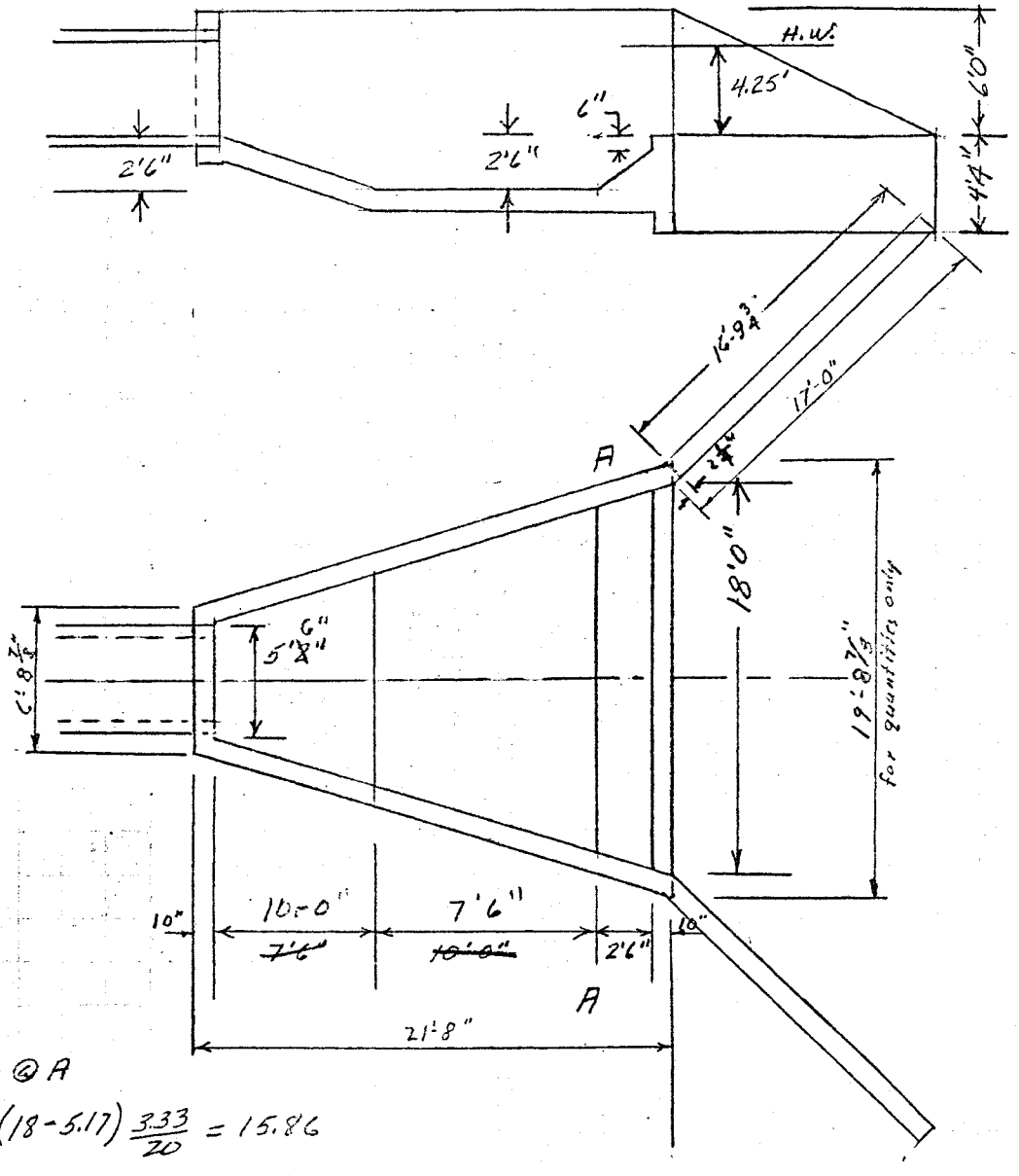

Width @ A

$15.0 - (18 - 5.17)\frac{333}{20} = 15.86$

Arizona
Watt 7-6-65
Floor Steel

Kingaird Rd Dam

Outside Steel

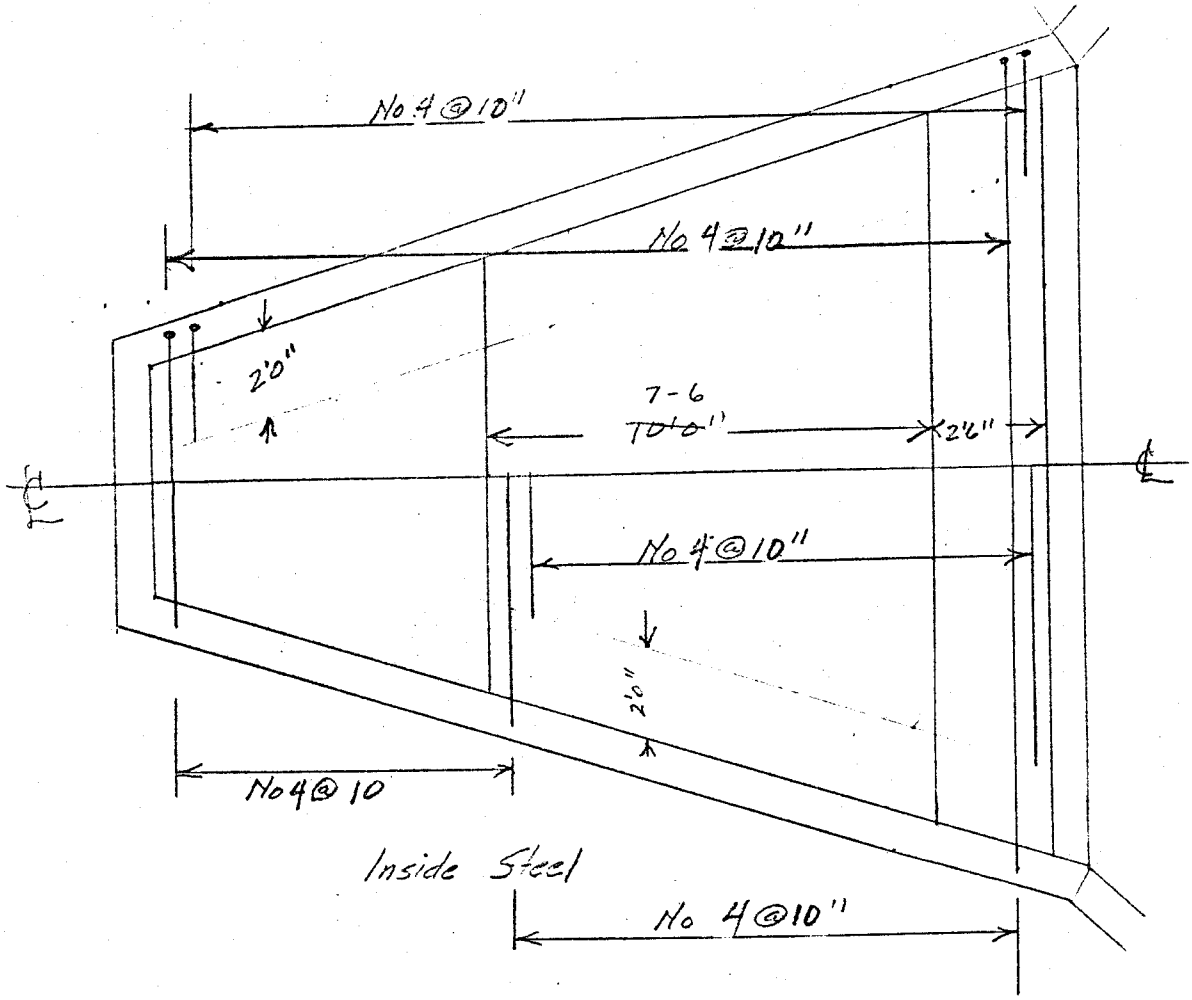

Longtitudinal Steel No 4 @ 10"

COMPUTATION SHEET
SCS-522 REV 5-58

U. S. DEPARTMENT OF AGRICULTURE
SOIL CONSERVATION SERVICE

GPO : 1958 O—470868

STATE		PROJECT		
Arizona		Vinyard Rd Dam		
BY	DATE	CHECKED BY	DATE	JOB NO.
Watt	7-1-65			

SUBJECT Sidewall Design Outlet Basin — SHEET ____ OF ____

Critical Section @ A

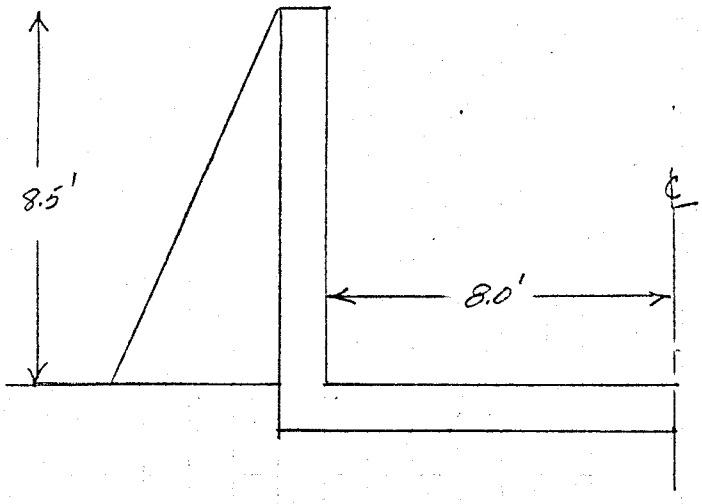

Equ. Fluid Pressure 40 #/ft²

Wt. Earth 110 #/ft³

Wt Conc 150 #/ft³

Min Wall thickness 10.0"

Arizona — Vineyard Rd Dam

Watt 7-6-65

Sidewall Steel

$M_o = \frac{WL^3}{6} = \frac{40 \times 8.5^3}{6} = 4094.$ #lbs

Where $M = 2050 = \frac{40 L^3}{6}$ $L = 6.75$ (cut of ½ of Steel

Floor

Wt of Wall = $\frac{10}{12} \times 8.5 \times 150 = 1063$ #

Wt on floor = $\frac{2 \times 1063}{15.84 + .83} = 127.3$ #/ft

Center Moment (Simple) = $\frac{127.3 \times 16.7^2}{8} = 4,438$ #lbs

End Moments Fixed $\frac{127.3 \times 16.7^2}{12} = 2960$ #lbs

$M_s = \frac{WL}{2} l - \frac{Wl^2}{2}$

For l	M	M	l
$L/2$	$\frac{WL^2}{8}$	4,438	8.35
$L/4$	$\frac{3WL^2}{32}$	3,330	4.17
$L/8$	$\frac{7}{128}L^2$	1,940	2.08
$3L/8$	$\frac{15}{128}L^2$	4,150	6.25

Arizona Vingard Rd Dam
Watt 7-1-65
Steel in Floor Slab Outlet Basin

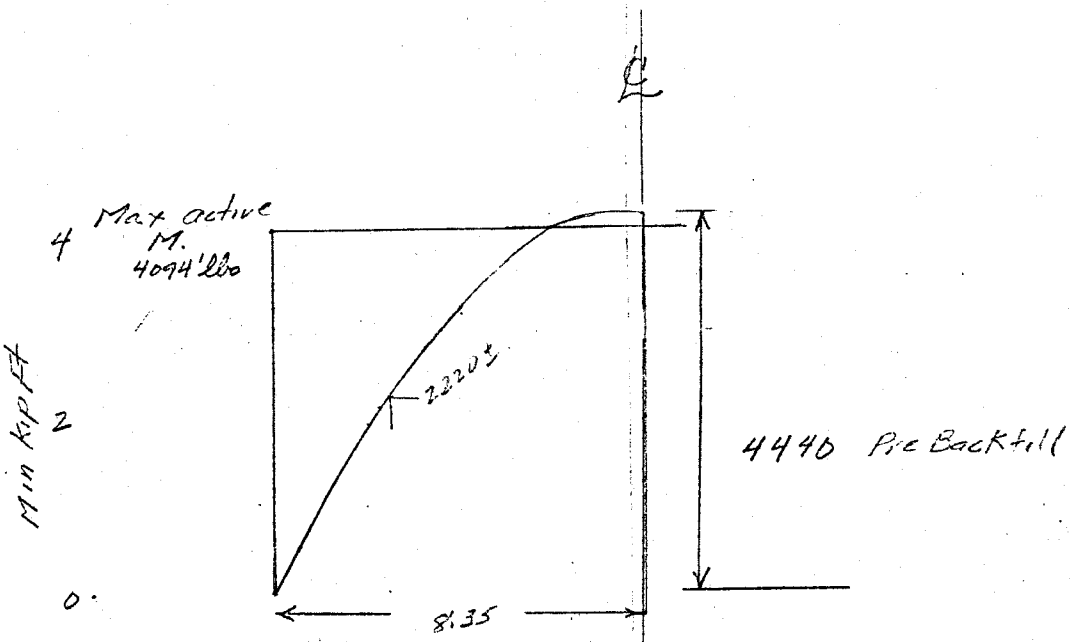

Pre Backfill
For min 10" wall d = 7½"

A_s = 0.40 sq in/lin ft = No 4 @ 6"

Because Temp Steel = 4" @ 10" Use 4 @ 5" & 10"

M = 2220 @ 2½' from ℄ of Wall 2' from inside face.

Width of Str. where center M = 2220 ft lbs.

$\frac{2 \times 1063 \times l}{8} = 2220 \quad l = 8.35$

COMPUTATION SHEET
SCS-522 REV 5-58

U.S. DEPARTMENT OF AGRICULTURE
SOIL CONSERVATION SERVICE

GPO : 1958 O—470868

STATE		PROJECT		
Arizona		Vineyard Rd Dam		
BY	DATE	CHECKED BY	DATE	JOB NO.
Watt	7-6-65			

SUBJECT Check on Shear & Bond

SHEET ____ OF ____

Max Shear Side Walls = $\frac{WD^2}{2} = \frac{40 \times 8.5^2}{2} = 1445^{\#}/\text{lin ft}$

Floor = $1063^{\#}/\text{lin ft}$

Check on Shear

$$V = \frac{1445 \times \frac{8}{7}}{12 \times 7\frac{1}{2}} = \underline{18.5 \text{ lb/in}^2} \quad \text{OK}$$

Bond $\frac{1445 \times \frac{8}{7}}{7.5 \times 210 \times 7} = E_o = \underline{1.04 \text{ per. neg}}$ OK

Arizona Vineyard Rd Dam
Watt 7-6-65
Sidewall Steel Outlet Basin

Outside Steel

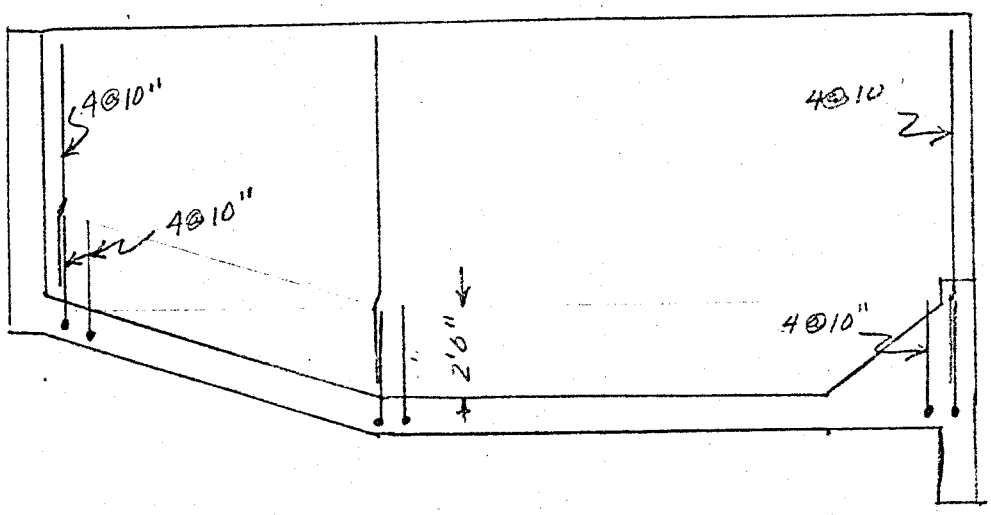

Inside Steel No 4@10"

Longitudinal No 4@10"

Arizona — Vinyard Rd Dam
Watt - 7-7-65
Width of Footing on Wing of Outlet Basin.

Equiv. Fluid Pressure 40 lbs/ft^3

Wt of Earth 110 #/ft^3

Concrete 150 #/ft^3

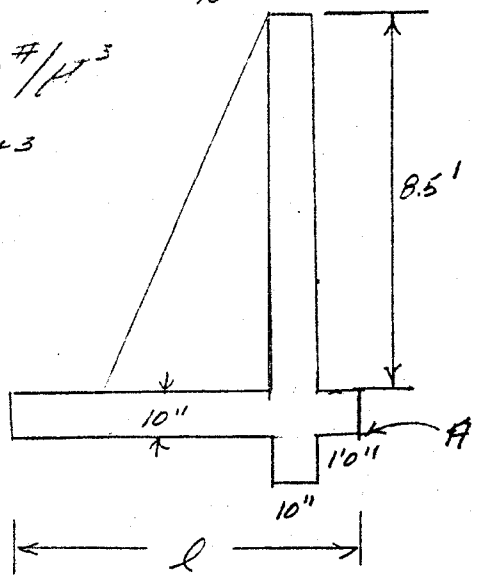

ΣM_a

Wall	$8.5 \times .83 \times 150 \times 1.42$	$= 1503$
Fluid Press	$\frac{40 \times 8.5^2}{2} \times \left(\frac{8.5}{3} + .83\right)$	$= 5297$
Floor	$.83 \times \ell \times 150 \times \frac{\ell}{2}$	$62.47\ell^2$
Wt Earth	$110 \times 8.5 \times (\ell - 1.83)\left(\frac{\ell - 1.83}{2} + 1.83\right)$	
	$= 110 \times 8.5 \left(\frac{\ell^2 - 1.83^2}{2}\right)$	$467.5\ell^2 - 1571$

ΣF_y	Wall $= 8.5 \times .83 \times 150 =$	1062
Floor	$.83\ell \times 150 =$	125ℓ
Earth	$110 \times 8.5 (\ell - 1.83) =$	$935\ell - 1714$

Arizona Vineyard Road Dam
Watt 7-7-65
Width of footing on Wing

For Stability

$$\frac{\Sigma M_A}{\Sigma F_y} = \frac{\ell}{3} = \frac{1503 - 5297 + 62.47\ell^2 + 467.5\ell^2 - 1571}{1062 + 125\ell - 1717 + 935\ell}$$

$$\frac{\ell}{3} = \frac{530\ell^2 - 5365}{1060\ell - 652}$$

$$1060\ell^2 - 652\ell = 1590\ell^2 - 16{,}095$$

$$530\ell^2 + 652\ell - 16{,}095 = 0$$

$$\ell^2 + 1.23\ell - 30.36 = 0$$

$$\ell = \frac{-1.23 \pm \sqrt{1.51 + 121.44}}{2}$$

$$\ell = \frac{-1.23 \pm 11.09}{2} = 4.92 \quad \text{Call } 5^{\circ}$$

Check M_A

Wall	+1503
Fluid Pressure	-5297
Earth $110 \times 8.5 (5-1.83)\left(\frac{5-1.83}{2} + 1.83\right)$ =	10,122
Floor $5 \times .833 \times 150 \times 2.5$ =	1562
ΣM_A Total	7890 ft lbs

ΣF_y =

Wall	1062
Floor $5 \times .83 \times 150$	625
Earth $110 \times 8.5 (5-1.833)$ =	2961
Total =	4648

$\frac{7890}{4648}$ - 1.7 - 1.5 OK

Arizona Vineyard Rd Dam

Watt

Moments on Wing Wall

Outlet Basin

Equiv Fluid Pres. = 40 #/ft³

$$M = \frac{wl^3}{6} = \frac{40 \times 6.5^3}{6} = 4090 \text{ ft-lbs}$$

Use 4# @ 5"

Where M = 2.115 ft-lbs

$$M = 2.115 = \frac{40 \times l^3}{6}$$

$$l^3 = 307$$

$$l = 6.75$$

Use 4@10" when ht of wall = 6.5 ft

Arizona Vineyard Rd Dam
Watt 7-7-65
Reinforcing of wing Wall Outlet Basin

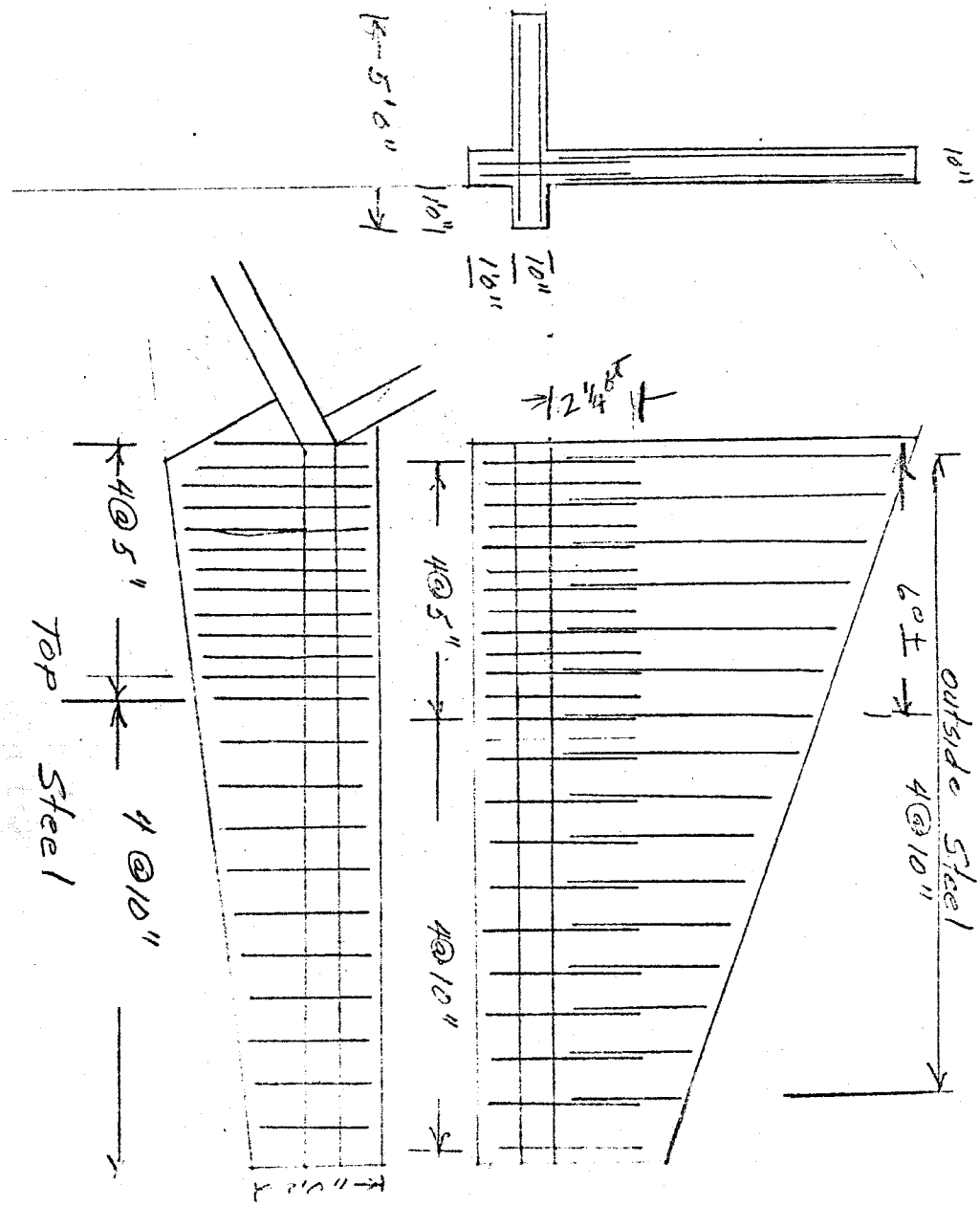

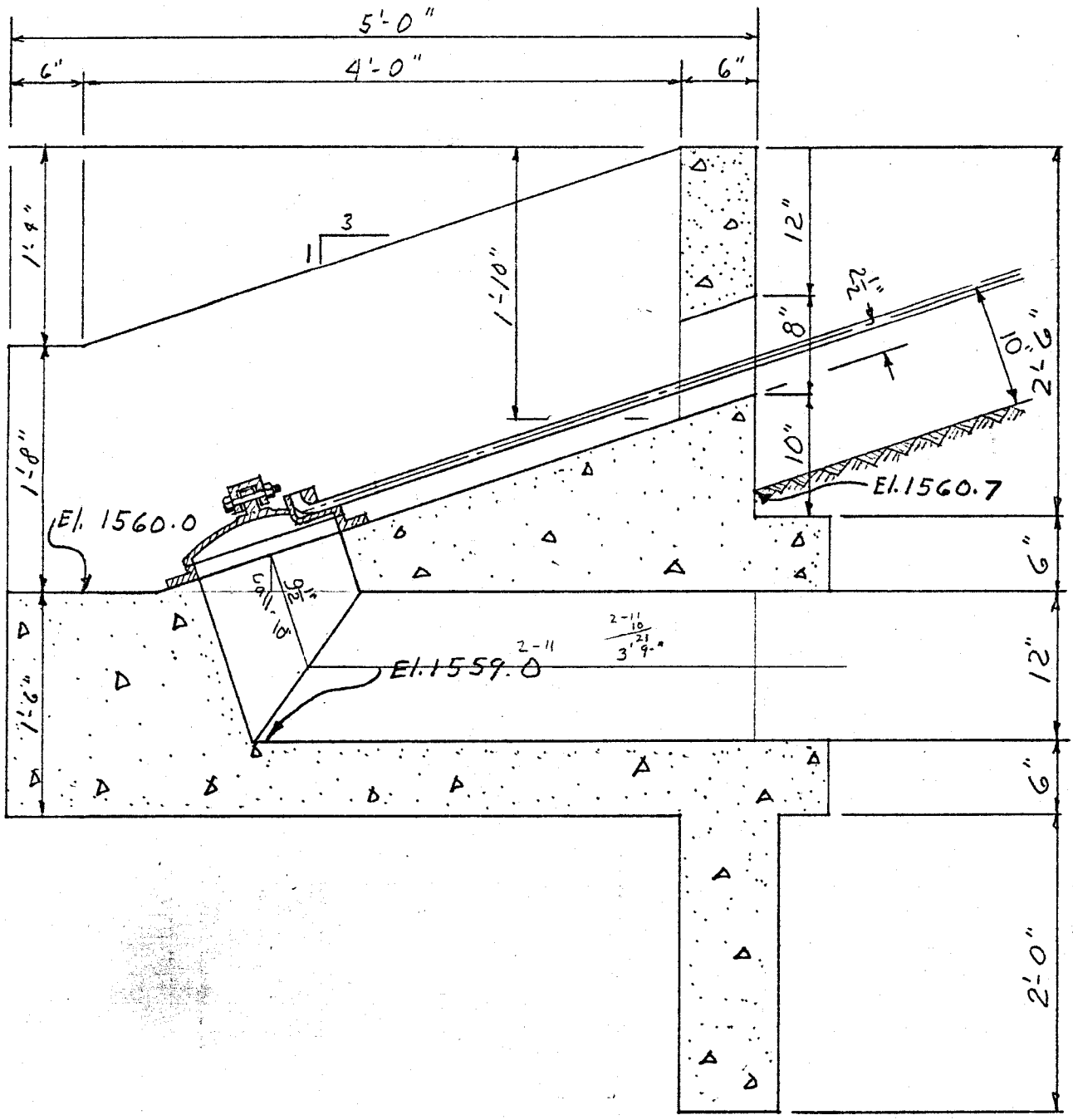
5'-0"
6"
4'-0"
6"
1'-4"
1'-10"
12"
8"
10"
2'-6"
1'-8"
El. 1560.0
El. 1560.7
El. 1559.0
6"
12"
6"
2'-0"
1'-6"

Arizona Vineyard Rd Dam
GOH 11-29-66
~~stock pond~~ Gated outlet

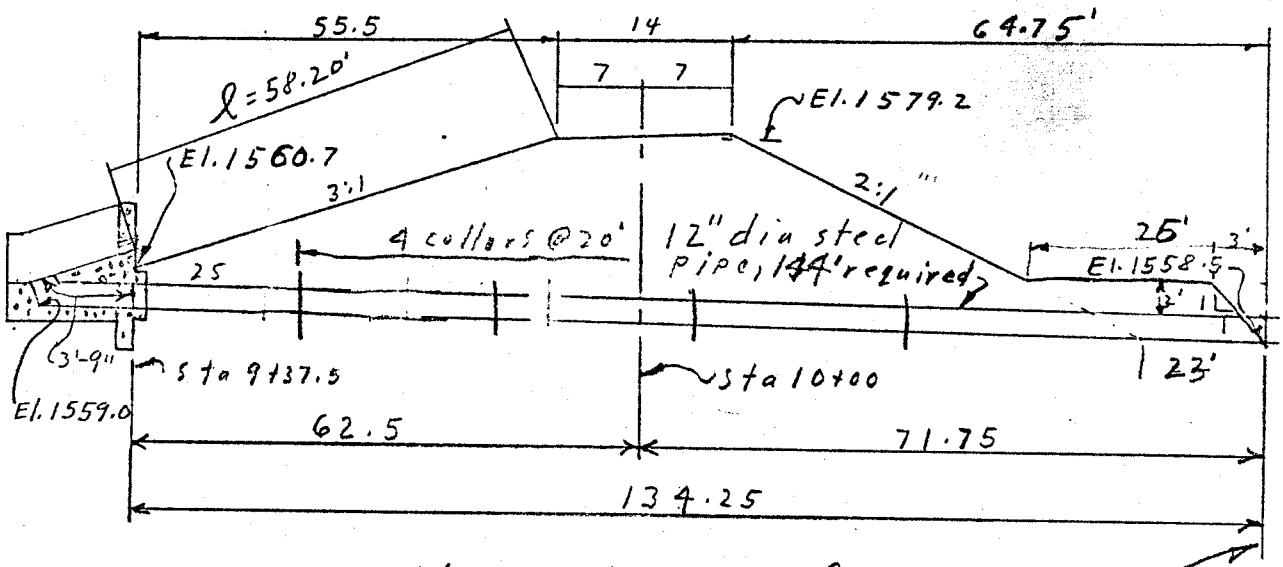

Add on about 6' for cantilever

1579.2
1560.7
18.5
3
55.5

Anti Seep Collars $N = \frac{0.075 \times 105}{2} = 3.95 = 4$ collars

Pipe Camber Computations

Sta	L	x	x/L	x/L^2	4e	y	El.
9+37.5	0	0	0	0	0	0	1559.0
9+97.5	60	0	1	1	0	0	1559.00
10+07.5	50	10	0.20	0.04	0.5	0.02	1558.98
10+17.5	"	20	0.40	0.16	"	0.08	1558.92
10+27.5	"	30	0.60	0.36	"	0.18	1558.82
10+37.5	"	40	0.80	0.64	"	0.32	1558.68
10+47.5	50	50	1.00	1.0	"	0.50	1558.50
10+63.25	16.25	16.25	1.00	1.0	"		1558.50

$\ell = \sqrt{55.5^2 + 17.534^2} = \sqrt{3,387.69116} = 58.20'$

$\frac{1.0208}{10} = 0.10208$ use 1"