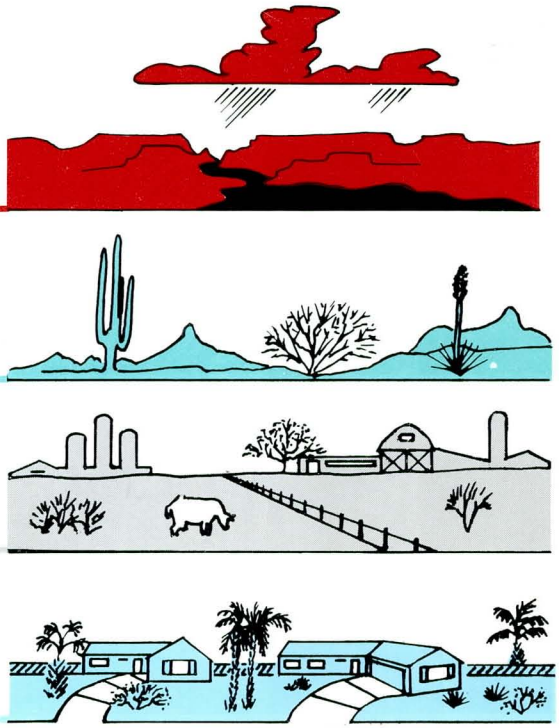

FLOOD CONTROL
DISTRICT OF
MARICOPA COUNTY

DRAFT
CONCEPTUAL HYDROLOGIC / ALTERNATIVES ANALYSIS REPORT
August, 1999
FCD Project No. 442-05-31

FLOOD CONTROL DISTRICT OF MARICOPA COUNTY

Property of
Flood Control District of MC Library
Please Return to
2801 W. Durango
Phoenix, AZ 85009

DRAFT
CONCEPTUAL HYDROLOGIC / ALTERNATIVES ANALYSIS REPORT

August, 1999

FCD Project No. 442-05-31

HAWES ROAD CHANNEL IMPROVEMENTS

DRAFT
CONCEPTUAL HYDROLOGIC / ALTERNATIVES ANALYSIS REPORT

FLOOD CONTROL DISTRICT OF MARICOPA COUNTY

August, 1999

Prepared For:
Flood Control District of Maricopa County
Chief Engineer & General Manager

Registered Professional Engineer (Civil)
CERTIFICATE NO.
22565
MICHAEL A.
LOPEZ
Date Signed
ARIZONA, U.S.A.

Prepared by:
Engineering Division
Flood Control District of Maricopa County

FCD Project No. 442-05-31

HAWES ROAD CHANNEL IMPROVEMENTS
FCD PROJECT NO. 442-05-31
DRAFT CONCEPTUAL HYDROLOGIC / ALTERNATIVES REPORT

TABLE OF CONTENTS

Section **Page**

COVER 1

TABLE OF CONTENTS 2

FIGURES AND TABLES 3

1.0 PROJECT DESCRIPTION 4
- 1.1 Purpose 4
- 1.2 Location 4
- 1.3 Field Conditions 7
- 1.4 Rights-of-Way 7
- 1.5 Utilities 7
- 1.6 Other Impacted Projects 8

2.0 HYDROLOGIC ANALYSIS 8

3.0 EVALUATE CHANNEL ALTERNATIVES 11
- 3.1 Channel Alternative A 11
- 3.2 Channel Alternative B 12
- 3.2 Channel Alternative C 14
- 3.4 Channel Alternative D 15
- 3.5 Hawes Road Detention basin 17
- 3.5 Hawes Road & Southern Avenue Culverts 20
- 3.5 Recommended Alternative 21

4.0 HYDRAULIC ANALYSIS 21
- 4.1 Existing Channel Hydraulics 21
- 3.5 Proposed Channel Hydraulics 22

5.0 CONSTRUCTION COST ESTIMATE 24

Registered Professional Engineer (Civil)
CERTIFICATE NO.
22565
MICHAEL A.
LOPEZ
Date Signed 8/27/99
ARIZONA, U.S.A.

LIST OF FIGURES

FIGURE NO.	DESCRIPTION	PAGE
FIGURE 1	DRAINAGE AREA MAP	5
FIGURE 2	HAWES ROAD PROJECT LOCATION MAP	6
FIGURE 3	CITY OF MESA PROJECTS & HAWES ROAD LOCATION MAP	9
FIGURE 4	SUB-BASIN 18 MAP	10
FIGURE 5	NEW RIGHT-OF-WAY MAP	13
FIGURE 6	HAWES ROAD BASIN PLAN	18
FIGURE 7	HAWES ROAD BASIN HYDROGRAPH	19
FIGURE 8	HAWES ROAD BASIN STAGE STORAGE CURVE	20

LIST OF TABLES

TABLE NO.	DESCRIPTION	PAGE
TABLE 1	EXISTING CHANNEL CAPACITIES	22
TABLE 2	COMPARISON OF RETURN PERIODS	24
TABLE 3	COMPARISON OF CONSTRUCTION COSTS	24

LIST OF APPENDICES

APPENDIX I.	CONSTRUCTION COST ESTIMATE
APPENDIX II	EXISTING CHANNEL CAPACITY ANALYSIS
APPENDIX III	NEW CHANNEL CAPACITY ANALYSIS
APPENDIX IV	SOUTHERN AVENUE AND HAWES ROAD FLOW SPLIT ANALYSIS
APPENDIX V	HEC1 OUTPUT PLAN B
APPENDIX VI	HEC1 OUTPUT PLAN C
APPENDIX VII	HEC1 OUTPUT PLAN D
APPENDIX VIII	CONCEPTUAL PLANS FOR ALTERNATIVE D

Registered Professional Engineer (Civil)
CERTIFICATE NO.
22565
MICHAEL A.
LOPEZ
Date Signed 8/27/99
ARIZONA, U.S.A.

1.0 PROJECT DESCRIPTION

1.1 Purpose

The purpose of this project is to develop final construction drawings, construction special provisions, and an engineer's estimate for the construction of channel improvements for the Hawes Road Channel as outlined in the Candidate Assessment Report (CAR) prepared by Primatech sealed April 30, 1999. The Hawes Road Channel Improvements will eliminate and/or significantly reduce the flood damage caused by events less than or equal to the future 100-year event. The East Mesa Area Drainage Master Plan (ADMP) developed by Dibble & Associates proposed a drainage solution for the area. The solution consisted of a number of detention basins along the Central Arizona Project (CAP) and channel & storm drain improvements downstream of the CAP to capture, collect, attenuate, and convey storm water runoff to the East Maricopa Floodway (See Figure 1). The Hawes Road Channel Improvement is just one component of the ADMP.

The District entered into Intergovernmental Agreement (IGA FCD – xxxxx) with the City of Mesa, and agreed to cost-share fund in the design and construction of the Southern Avenue Improvements and been authorized to negotiate cost-sharing of the Hawes Road Channel Improvements by Resolution xxxx. The Hawes Road Channel Improvements between Apache Trail and Southern Avenue are currently being designed in-house based upon the Preferred Alternate listed in the CAR. The City of Mesa is also preparing a design in-house for a storm drain in Broadway Road from Hawes Road to Sossaman Road that connects to the Hawes Road Channel Improvements.

1.2 Location

The project is located in east Mesa, in Sections 16, 17, 20, 21, 28, and 29, Township 1 North, Range 7 East of the Gila and Salt River Base and Meridian. This Project is located on Hawes Road between the Superstition Freeway and the Apache Trail (See Figure 2).

Aerial View of Hawes Road Watershed

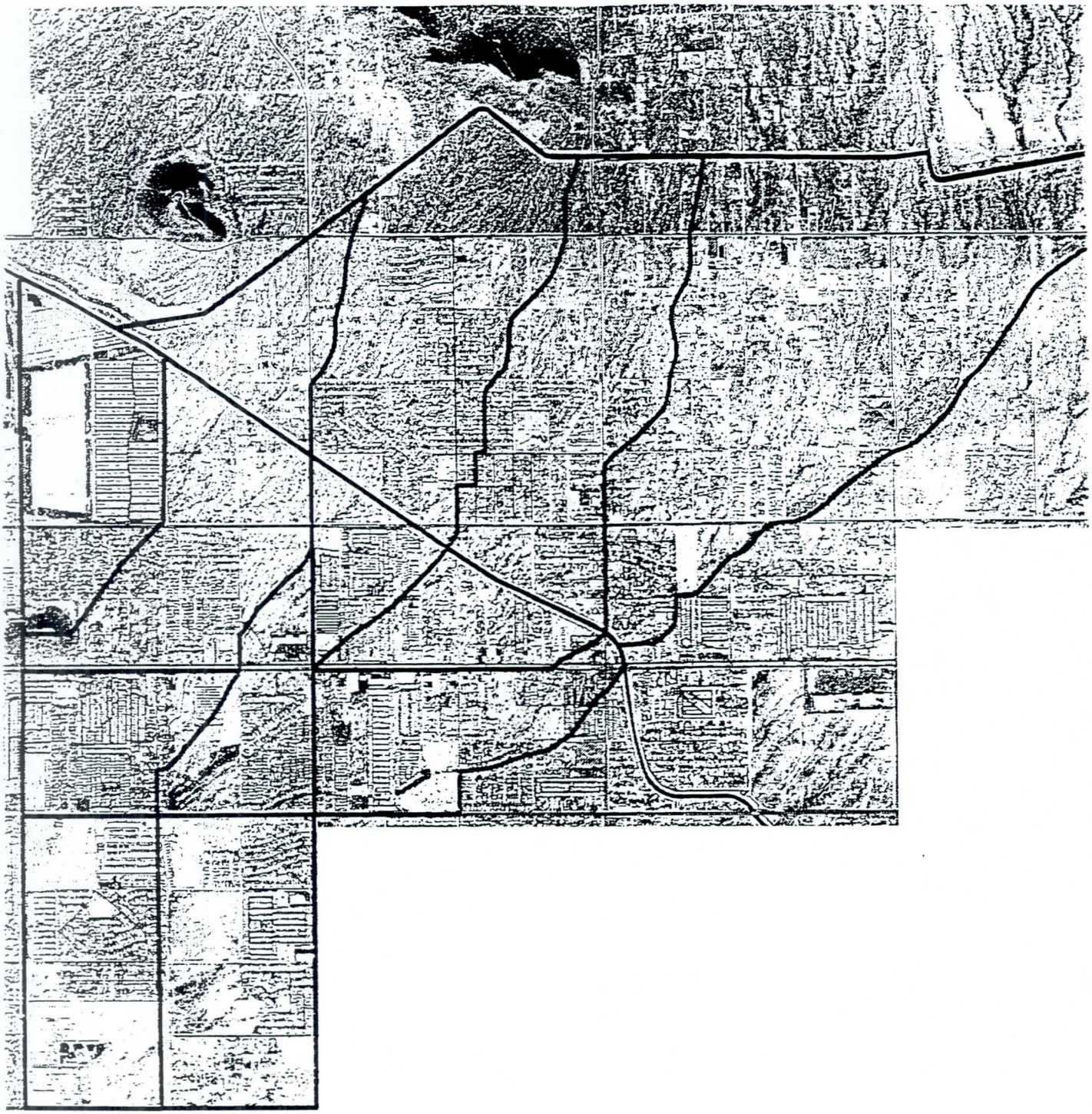

Figure 1

Hawes Road Channel Improvement Project

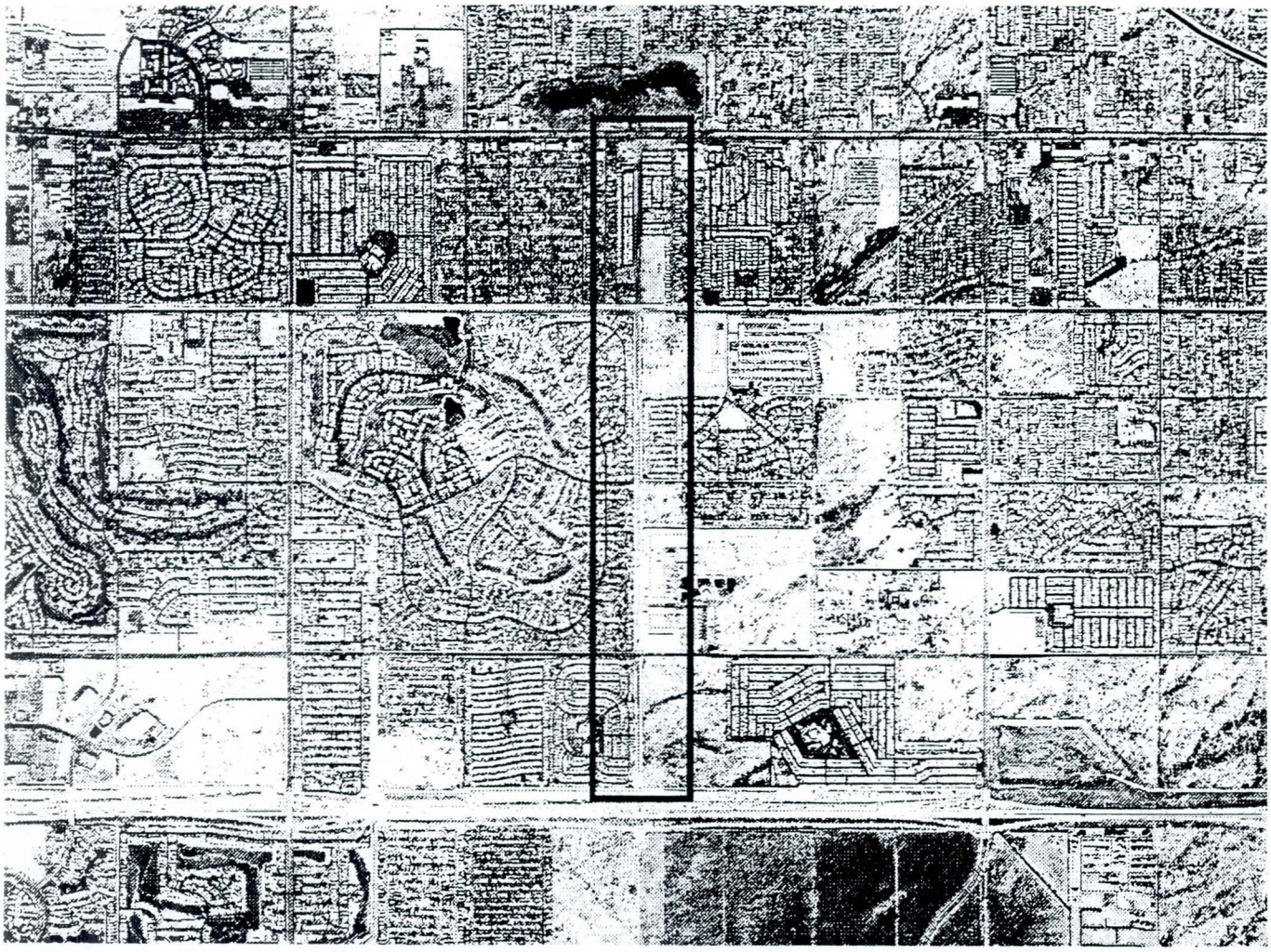

0.4 0 0.4 0.8 Miles

N
W E
S

Figure 2

1.3 Field Conditions

The area surrounding Hawes Road between the Superstition Freeway and the Apache Trail is developed mostly with mobile home parks. There are also some single-family homes and several undeveloped parcels.

There is an existing concrete lined channel on the West Side of Hawes Road between the Superstition Freeway and Emulate Avenue. There is an existing 2 barrel 8' x 4' concrete box culvert in Southern Avenue.

From Emulate Avenue north to the Apache Trail, the Hawes Road channel is unimproved and does not have adequate capacity to convey the 100-year flows.

1.4 Rights-of-Way

There is existing right-of-way along Hawes Road from the Superstition Freeway to the Apache Trail. The width of this existing right-of-way varies from 40 feet to 65 feet from monument line to right-of-way line.

Additional rights-of-way are necessary for all of the alternatives considered. The additional right-of-way needed varies for each alternative and is discussed later in this report.

Temporary construction easements may also be required.

1.5 Utilities

The existing utilities in Hawes Road include sanitary sewer, water, and gas. Utility relocations may be required depending on the alternative selected. This is discussed later in this report.

1.6 Other Impacted Projects

Two City of Mesa projects connect into the Hawes Road improvements (See Figure 3). They are as follows:

* Southern Avenue Drainage Improvements, Sossaman Road to Hawes Road, Project No. 97-56.1
* Broadway Road Widening and Storm Drain Improvements, Sossaman Road to Hawes Road, Project No. 95-16

2.0 HYDROLOGIC ANALYSIS

The hydrology from the East Mesa Area Drainage Master Plan was used as a basis for the hydrologic analysis (See Figure 4). Examination of USGS topographic maps, aerial photos and field visits revealed that subbasin 18A could be split into two separate subbasins. This reduced the flows reaching the intersection of Hawes Road and Apache Trail by more than half.

The base model was revised to include a series of models reflecting alternate proposed changes that could be made along Hawes Road. The first of these models (Plan B) utilized the Broadway Road Storm Drain Diversion Structure, City of Mesa Project No. 95-16. This plan utilizes the 72-inch storm drain designed to convey 360 cfs from the intersection of Hawes and Broadway Roads. Flow would be carried to the west under Broadway Road and empty into the channel that lies along the east side of Sossaman Road. Also modeled in this plan is the Southern Avenue Storm Drain Diversion Structure, City of Mesa Project No. 97-56. This consists of three new box culverts at the intersection of Hawes Road and Southern Avenue. One new 8'x 4' box culvert is to be placed beside the two original 8' x 4' box culverts which carry flow to the south along Hawes Road to the ADOT channel north of US 60. The other two box culverts (10'x 6') are placed facing west sending flow into the Sossaman Channel.

A second model (Plan C) was built to investigate what flows would be carried down the Hawes Road Channel without the 360 cfs diversion at Broadway Road. This plan also utilized the proposed Southern Avenue Storm Drain Diversion Structure in the configuration described above.

Broadway Road, Southern Avenue & Hawes Road Projects

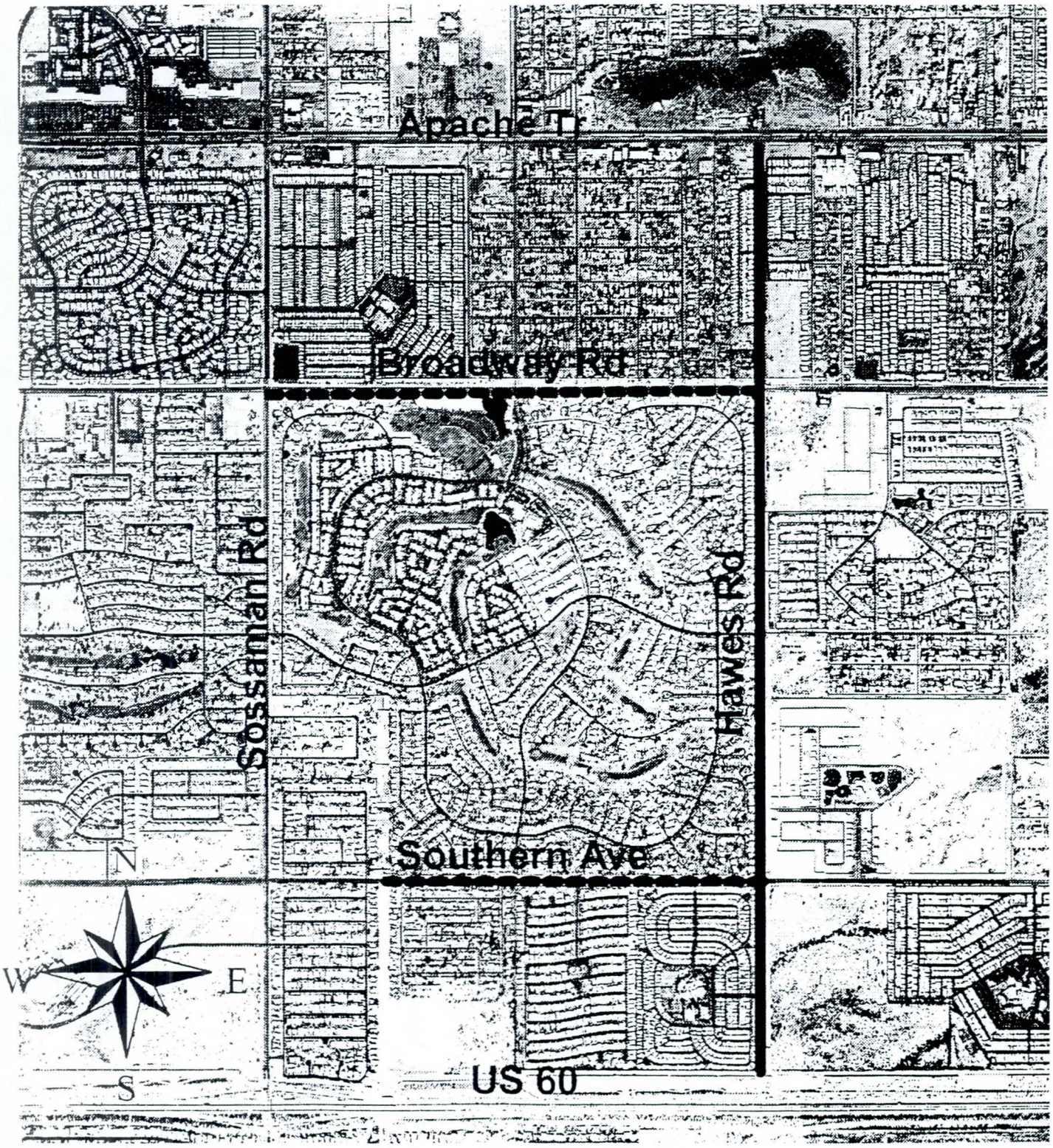

Figure 3

USGS Background of Subbasin 18

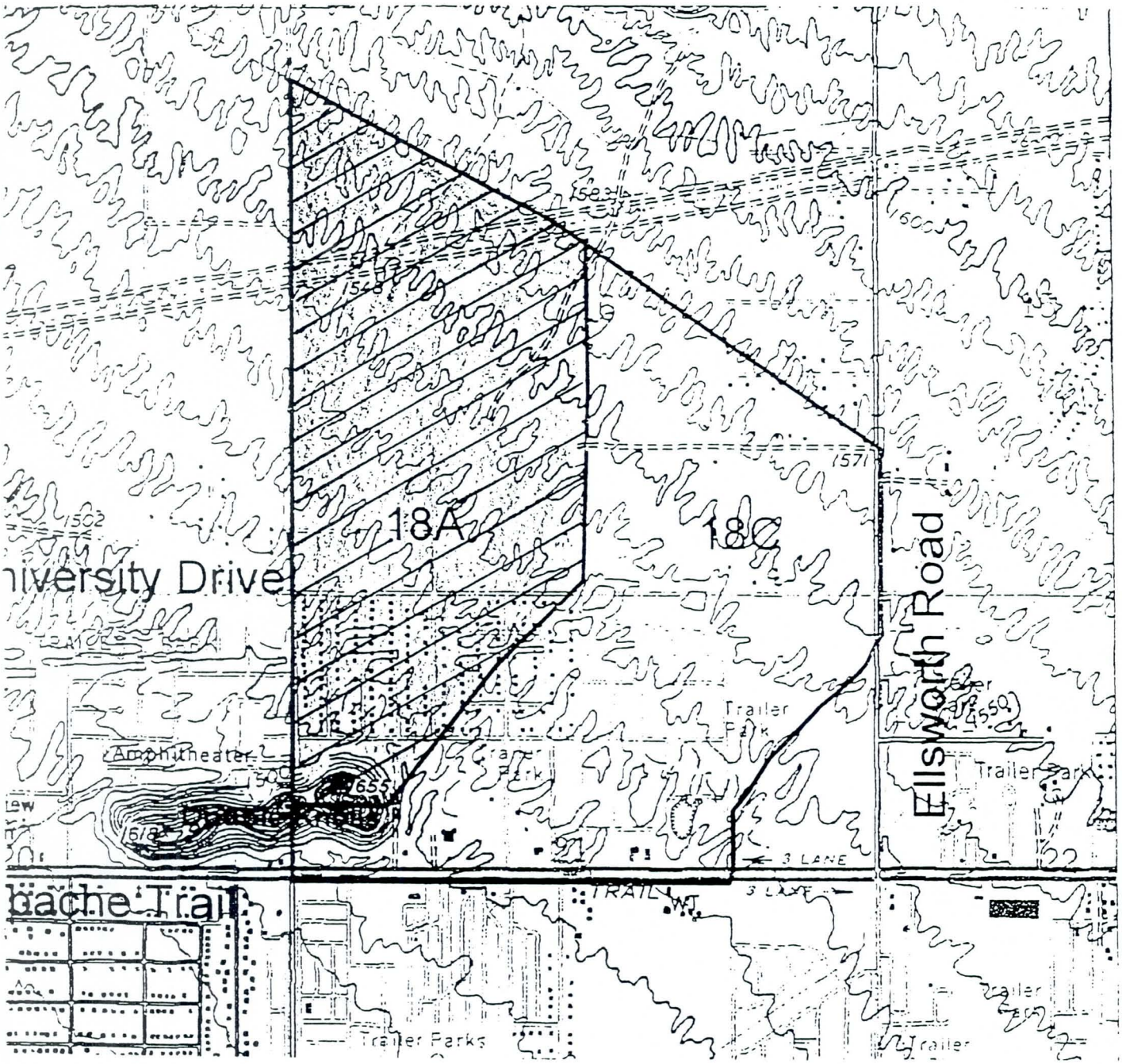

Shaded area (Sub-Basin 18A) was removed from the contributing watershed of the Hawes Road Improvements.

Figure 4

In the third model (Plan D) a basin was added at a point just north of Emelita Avenue. The basin was designed to capture flows exceeding 800 cfs from the Hawes Road Channel. Because of the decreased flows coming down the Hawes Road Channel south of the basin, the Southern Avenue Storm Drain Diversion Structure was downsized. The existing 2 - 8'x 4' box culvert remains in place, however only one 10'x 6' box culvert is placed facing the west allowing flows into the Southern Avenue Channel.

3.0 EVALUATE CHANNEL ALTERNATIVES

Three channel alternatives were evaluated to meet the 100-year future flows. These alternatives are evaluated below.

3.1 Channel Alternative A

Channel Alternative A consists of constructing the improvements proposed in Alternative 1 of the Candidate Assessment Report (CAR). This is the preferred alternative in the CAR report. These improvements were designed using the flows calculated in the Area Drainage Master Plan (ADMP) prepared by Dibble & Associates. The primary elements of this alternative are as follows:

* Install a 60-inch concrete pipe from the Superstition Freeway to Broadway Road
* Construct a concrete trapezoidal channel between Emelita Avenue and Broadway Road on the West Side of Hawes Road
* Relocate a gas line between Emelita Avenue and Broadway Road
* Construct a 3 barrel 10' x 6' x 180' concrete box culvert underneath Broadway Road
* Construct a concrete trapezoidal channel between Broadway Road and Apache Trail on the East Side of Hawes Road
* Remove an existing 2 barrel 10' x 6' x 60' concrete box culvert at Broadway Road

Alternative A does not allow Hawes Road to be constructed to the 68' width required by the City of Mesa for the entire project length. Roadway widths were reduced between Broadway Road and Apache Trail to 34' to stay within existing right-of-way.

Right-of-way acquisition will be required on the East Side of Hawes Road north of Broadway Road. This right-of-way is only needed to align the channel north of Broadway Road with the existing box culvert through the intersection (See Figure 5).

There is work included in the two City of Mesa projects that is important because Alternatives C and D eliminate the need for the work.

Impacts to the City of Mesa's Southern Avenue project are as follows:

* Construct a concrete trapezoidal channel from the mobile home park entrance north to Southern Avenue, a length of approximately 1080'
- Construct one additional 10' x 6' barrel of a Concrete box culvert in Southern Avenue, a length of approximately 3950'
- Construct one 8' x 4' barrel of a Concrete box culvert under Southern Avenue, a length of approximately 95'

Impacts to the City of Mesa's Broadway Road project are as follows:

* Construct a 72" concrete pipe in Broadway Road, a length of approximately 3950'

The estimated construction cost of the improvements proposed in Alternative A, including impacts to the Southern Avenue and Broadway Road projects is $10,549,565.00 and is shown in detail in the Conceptual Cost Estimate (see Appendix 1).

3.2 Channel Alternative B

Alternative B is the same as Alternative A but with refined hydrology. Alternatives C and D were developed to resize the proposed improvements for the reduced flows.

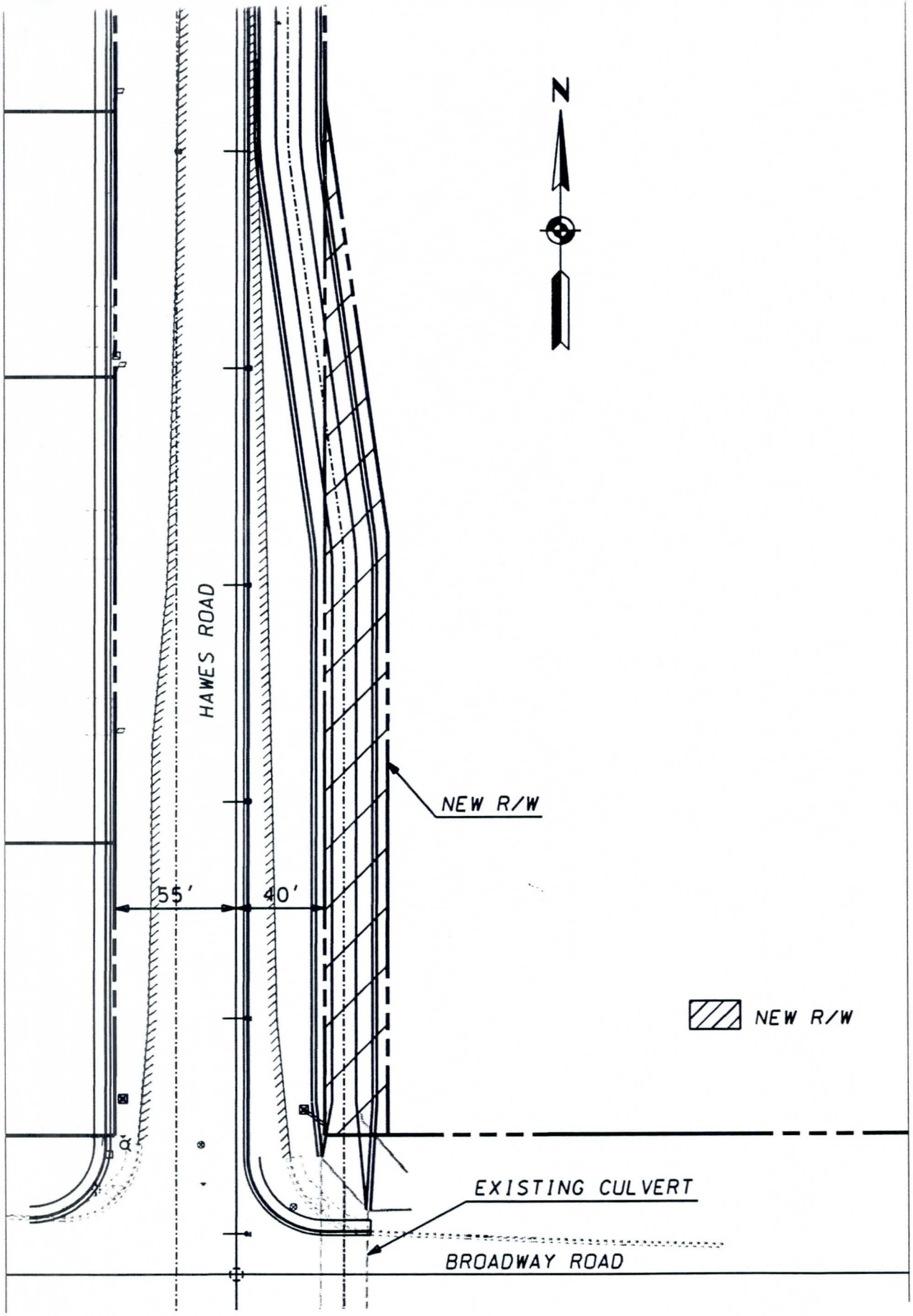
N
HAWES ROAD
NEW R/W
55'
40'
NEW R/W
EXISTING CULVERT
BROADWAY ROAD

Figure 5

3.3 Channel Alternative C

Channel Alternative C was developed using the refined project hydrology. The primary elements of this alternative are:

* Construct a concrete trapezoidal channel between Emelita Avenue and Broadway Road on the East Side of Hawes Road
* Construct a 3 barrel 8' x 4' x 135' concrete box culvert under Hawes Road where the Channel shifts from the east to the West Side of the road
* Construct 3 - 2 barrel 12' x 6' concrete box culverts under side streets that enter Hawes Road
* Construct a concrete trapezoidal channel between Broadway Road and Apache Trail

Cost savings obtained over the improvements proposed in Alternative A are as follows:

* Eliminate construction of a 3 barrel 10' x 6' x 180' concrete box culvert underneath Broadway Road

This Alternative allows Hawes Road to be constructed to the 68' width required by the City of Mesa for the entire project length.

Right-of-way acquisition will be required on the East Side of Hawes Road north of Broadway Road. This right-of-way is only needed to align the channel north of Broadway Road with the existing box culvert through the intersection (See Figure 5).

Impacts to the City of Mesa's Southern Avenue project is as follows:

- Construct one additional 10' x 6' barrel of a Concrete box culvert in Southern Avenue, a length of approximately 3950'

The cost savings obtained on the City of Mesa's Southern Avenue project are as follows:

* Eliminate the removal and reconstruction of a concrete trapezoidal channel from the mobile home park entrance north to Southern Avenue, a length of approximately 1080'

- Eliminate construction of one 8' x 4' barrel of a Concrete box culvert to be added under Southern Avenue, a length of approximately 95'

The cost savings obtained on the City of Mesa's Broadway Road project are as follows:

- Downsize the 72" concrete pipe in Broadway Road, a length of approximately 3950'

The estimated construction cost of the improvements proposed in Alternative B, including impacts to the Southern Avenue and Broadway Road projects is $5,731,301.88 and is shown in detail in the Conceptual Cost Estimate (see Appendix 1).

3.4 Channel Alternative D

Channel Alternative D was developed using the refined project hydrology. In addition, a detention basin was added on the East Side of Hawes Road between Emelita Avenue and Pueblo Avenue. The primary elements of this alternative are as follows:

* Construct a concrete trapezoidal channel between Emelita Avenue and Broadway Road on the East Side of Hawes Road
* Construct a 3 barrel 8' x 4' x 135' concrete box culvert under Hawes Road where the Channel shifts from the east to the West Side of the road
* Construct 3 - 2 barrel 12' x 6' concrete box culverts where side streets enter Hawes Road
* Construct a concrete trapezoidal channel between Broadway Road and Apache Trail
* Construct a detention basin on the East Side of Hawes Road between Emelita Avenue and Pueblo Avenue

Cost savings obtained over the improvements proposed in Alternative A are as follows:

* Eliminate construction of a 3 barrel 10' x 6' x 180' concrete box culvert underneath Broadway Road

This Alternative allows Hawes Road to be constructed to the width required by the City of Mesa for the entire project length.

Right-of-way acquisition will be required on the East Side of Hawes Road north of Broadway Road. This right-of-way is only needed to align the channel north of Broadway Road with the box culvert through the intersection (See Figure 5). The new retention basin will require approximately 8.5 acres on the East Side of Hawes Road between Emelita Avenue and Pueblo Avenue.

The cost savings obtained on the City of Mesa's Southern Avenue project are as follows:

* Eliminate the removal and reconstruction of a concrete trapezoidal channel from the mobile home park entrance north to Southern Avenue, a length of approximately 1080'
- Eliminate the construction of one 8' x 4' barrel of a Concrete box culvert to be added under Southern Avenue, a length of approximately 95'
- Eliminate the construction of one additional 10' x 6' barrel of a Concrete box culvert in Southern Avenue, a length of approximately 3950'

The cost savings obtained on the City of Mesa's Broadway Road project are as follows:

- Downsize the 72" concrete pipe in Broadway Road, a length of approximately 3950' on the East Side of Hawes Road between Emelita Avenue and Pueblo Avenue

The estimated construction cost of the improvements proposed in Alternative C, including impacts to the Southern Avenue and Broadway Road projects is $4,352,851.88 and is shown in detail in the Conceptual Cost Estimate (see Appendix 1).

3.5 Hawes Road Detention Basin

The vacant parcel along the east side of Hawes Road between Emelita and Pueblo Avenues was investigated for constructing a detention basin (See Figure 6). This site appears well suited for a mixed-use facility because it is surrounded by residential neighborhoods. The investigation looked at constructing an off-line basin. The reason for an off-line basin as opposed to an on-line basin is so that the frequent flow events can bypass the basin while only the larger and less frequent events will enter the basin.

The hydrograph at the proposed location for the basin is perfect for this situation because it is very short in duration and has a very steep peak (See Figure 7). The goal was to obtain as much attenuation as possible (scalp as much of the peak off of the hydrograph) while maintaining a shallow basin that would gravity drain back into the Hawes Road Channel. To develop a stage-storage curve (See Figure 8) for the basin, the following assumptions were made:

1. The maximum depth that the basin could be and still allow for outfall back into the Hawes Road Improvements is 6 feet from natural grade.

2. Side slopes had to be gentle and could not be steeper than 6:1.

3. Side slopes had to be set back a minimum of 10' from future roadside improvements that will ultimately include curb, gutter and sidewalk.

4. The roadway section around the perimeter of the basin will ultimately be a 28' wide section, Face of Curb to Face of Curb, with an attached 5' sidewalk.

5. No parking facility or other facilities will be provided above the perimeter of the basin.

Hawes Road Detention Basin

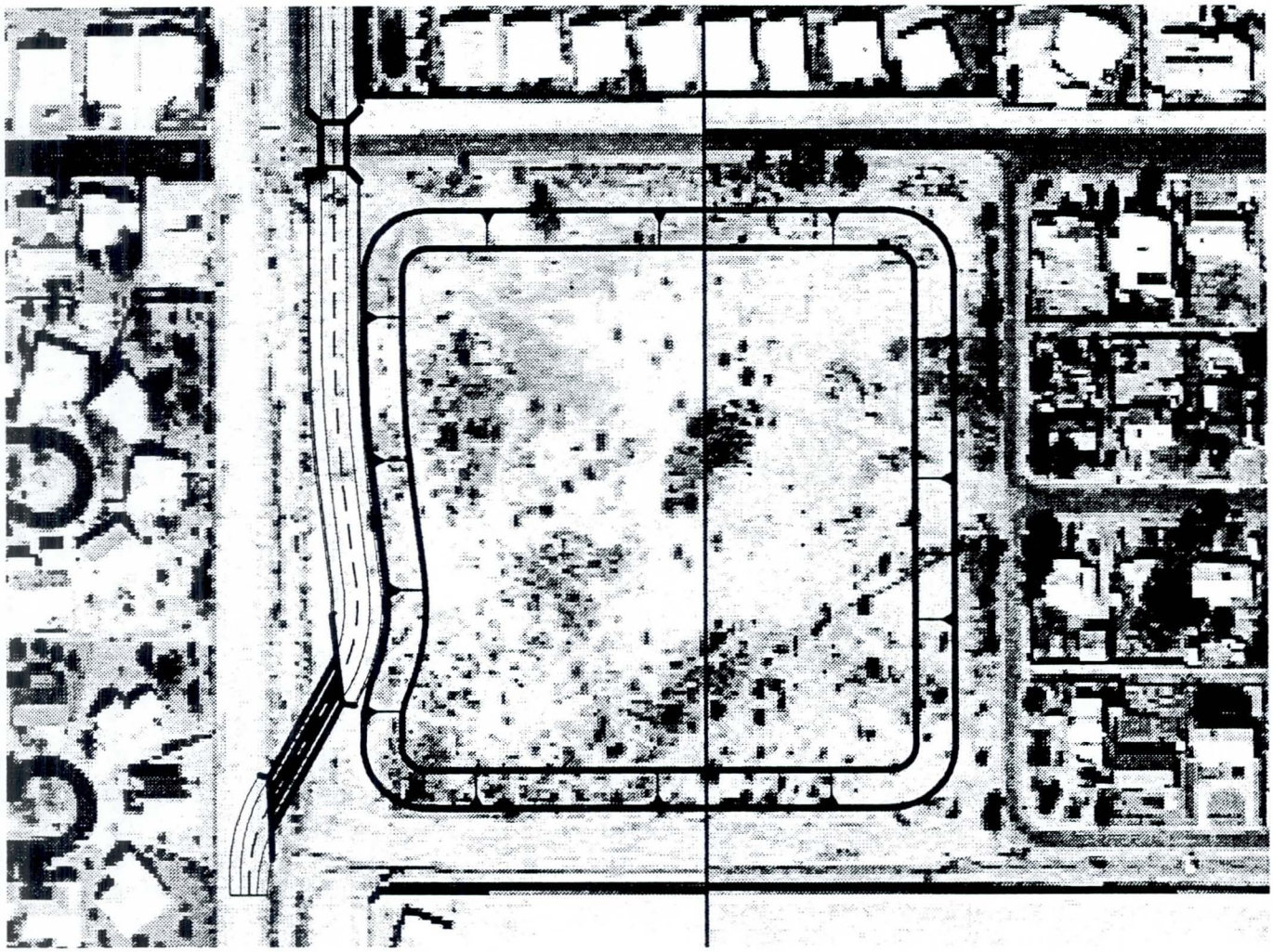

Figure 6

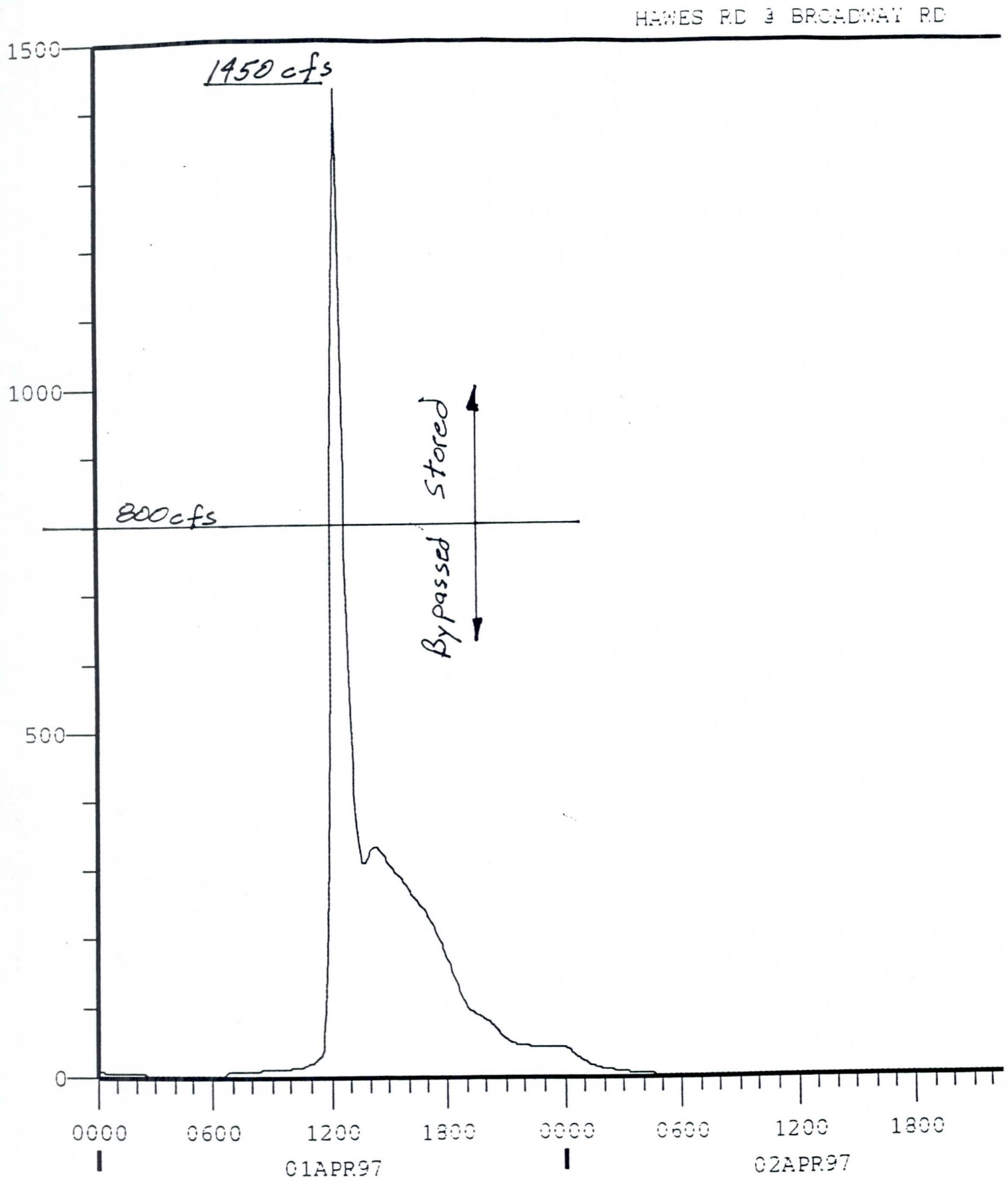
HAWES RD @ BROADWAY RD
1500
1000
500
0
1450 cfs
800 cfs
Stored
Bypassed
0000
0600
1200
1800
0000
0600
1200
1800
01APR97
02APR97

Figure 7

6. Parking will be along curbside (Approximately 1800 LF of curbside parking).

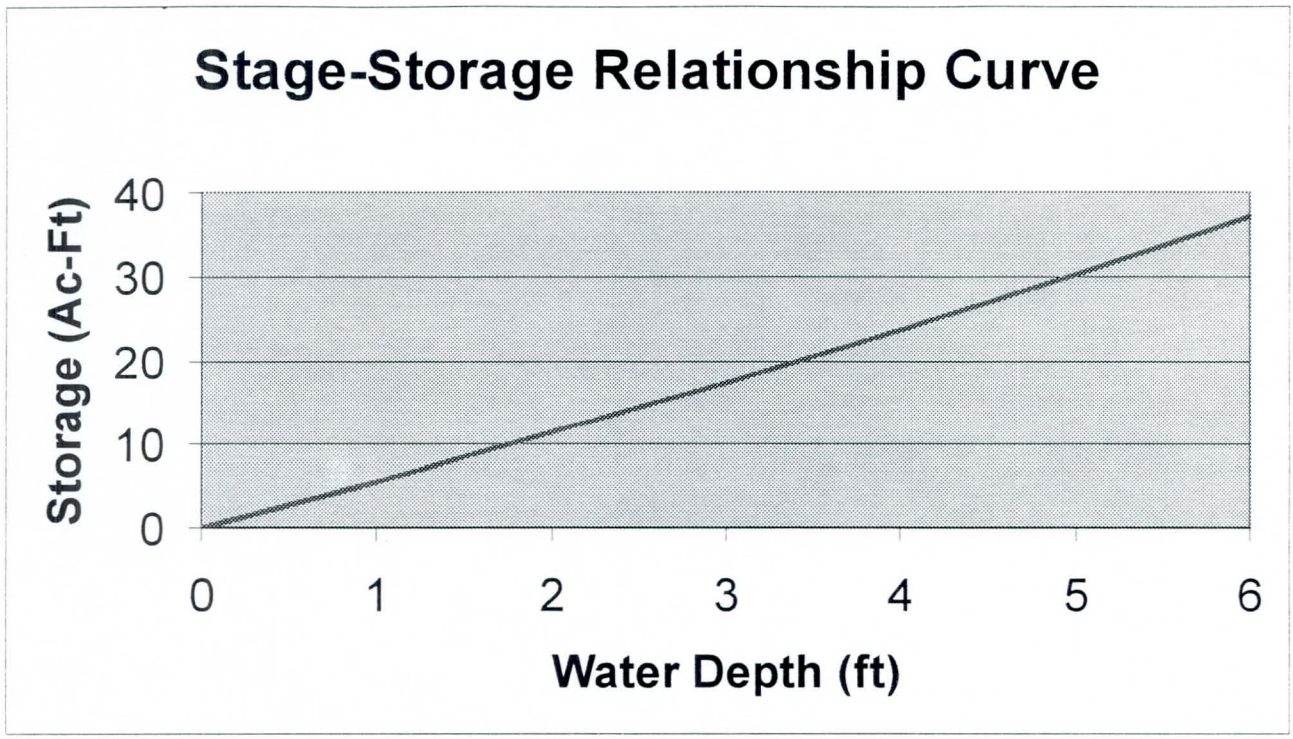

Figure 8

3.6 Hawes Road and Southern Avenue Culverts

The split flow conditions that occurs at the intersection of Southern Avenue and Hawes Road were modeled based upon inlet control. Three scenarios were modeled:

(1) 3 - 8' x 4' (2 cells existing) flowing south & 2 - 10' x 6' (new) flowing west with the crowns matching (Southern Avenue Drainage Improvement Plans, Project # 97-56.1).

(2) 2 - 8' x 4' (existing) flowing south & 2 - 10' x 6' (new) flowing west with the crowns matching (Southern Avenue Drainage Improvement Plans, amended to eliminate the construction of additional 8' x 4' cell south).

(3) 2 - 8' x 4'(existing) flowing south & 1 - 12' x 6' (new) flowing west with the crowns matching (Southern Avenue Drainage Improvement Plans, amended to eliminate the construction of additional 8' x 4' cell south and downsize culvert to the west).

The criteria used to select which inlet scenario to use to include in the HEC1 models for Plans B, C, and D was based upon not allowing the WSE (water surface elevation) to exceed the top of the adjacent curb grade.

The first effort in downsizing the culverts at the intersection of Southern Avenue & Hawes Road was to investigate eliminating the additional 8' x 4' cell crossing underneath Southern Avenue. With the elimination of this new cell, all of the planned improvements to the existing channel downstream of the crossing would also be eliminated. For any further reductions in flow, the proposed culverts conveying flows to the Sossaman Channel were investigated for downsizing. By adding a detention basin to the model between Emelita and Pueblo Avenues, the flows in the Hawes Road Channel were reduced to an amount that will reduce the 2 - 10' x 6' concrete box culvert down to a single 12'x 6' concrete box culvert in Southern Avenue. Additional refinement to the conceptual detention basin modeled may further reduce to Southern Avenue culvert to a single 10' x 6' concrete box culvert.

3.7 Recommended Alternative

Alternative D is the recommended alternative.

4.0 HYDRAULIC ANALYSIS

4.1 Existing Channel Hydraulics

The immediate outfall for improvements to the Hawes Road Channel is an existing concrete lined trapezoidal channel that begins at Hawes Road and Emelita Avenue. Further downstream at the

intersection of Hawes Road and Southern Avenue, the exiting channel splits. Some flows continue south into an existing 2 barrel 8'x 4' CBC and then continue on in another existing concrete lined trapezoidal channel until they reach a diversion channel alongside the north side of US 60. The remainder of the flows that do not continue south at Southern Avenue are diverted into an existing concrete lined trapezoidal channel that runs along the north side of Southern Avenue until they ultimately outfall into the Sossaman Channel.

The existing sections were analyzed to determine their conveyance capacity. The results of this analysis indicates that the existing sections along Hawes Road both upstream and downstream of Southern Avenue have less capacity than what their design capacity was to be. This is because of two items that were identified by design surveys and field review. First, the finish of these concrete channels is rougher than the roughness coefficient used for the design or at least previous studies indicated. Previous studies have used a roughness coefficient of n = 0.015. Considering the rough and un-trowelled finish of the existing channels, the roughness coefficient is closer to n = 0.02; this is consistent with the roughness coefficient of a normal and good section of shotcrete according to the District's Hydraulic Manual. Secondly, the design survey indicates that the channel depth and configuration is not what it was previously believed to be. The bottom widths and depths were less than reported in previous studies. The Table below shows the results of the open channel analysis based upon Manning's equation and field measurements.

Table 1 EXISTING CHANNEL CAPACITY

Reach	Limits	* Capacity (cfs)
0-1	US 60 to dwy bridge 1200' south of Southern Avenue	462
0-2	Dwy bridge to Southern Avenue	433
1-1	Southern Avenue to Emelita Avenue	1006

* The capacities are based upon flowing bank-full. No additional room is available for freeboard.

For additional hydraulic analysis see Appendix II.

4.2 Proposed Channel Hydraulics

The proposed sections were developed also using Manning's Equation. All sections were based upon being concrete lined with a smooth finish. This was needed in order to keep the channel section and future road improvements within the existing rights-of-way. The expected future improvements include a 64' roadway (face of curb to face of curb), concrete curb & gutter on each side of the pavement, and a 5' sidewalk along one side only. The full 68' width fits throughout most of the project except for the reach north of Broadway Road. It is along this reach that the existing rights-of-way are the narrowest. In order to eliminate the acquisition of additional rights-of-way and possible relocation of homeowners, the 64' width was used.

Other criteria used to develop the proposed section are based upon hydraulic properties. The slopes were set such that the flow regime would remain sub-critical and allow for at least 1' of freeboard. The side slopes were to be no steeper than 2:1 and the bottom width was set to be no less than 10'.

In Plan D that has a detention basin, the channel section was sized to convey the entire flow with a section that has a side weir. The side weir elevation was set at the water surface elevation of the amount to be bypassed (800cfs). The difference between the water surface elevation of the full incoming amount (1435 cfs) and the bypass flow is the head available to drive excess flows into the basin. Using the available head mentioned above, the required length of the weir (136 ft) was determined and compared with the available length (450 ft) adjacent to the basin/park.

The HEC 1 model for Plan D was modified to determine the discharge amounts for the 25-, 50-, and 100-year events to determine the frequency of event that would enter the basin (See Table 2). The bypass flow amount of 800 cfs is greater than the 25-year event. No flows will enter the basin for events less than the 25-yr event.

TABLE 2 **Comparisons of Return Periods**

HEC-1 Schematic name	Physical Location	100-yr	50-yr	25-yr
C18C	Hawes Rd @ Apache	443	375	297
C24	Hawes Rd @ Broadway	1435	1066	766
RT31B1	Route Flow: Hawes to CoralBell	1435	1066	766
RT31B2	Route Flow: CoralBell to Emelita	1435	1066	766
BASIN #	Detention Basin @ Emelita	635	266	0
	Volume into Emelita Basin (Ac-Ft)	21	7	0
RT31B3	Route Flow: Emelita to Southern	800	800	766

5.0 CONSTRUCTION COST ESTIMATE

A Summary of the estimated Hawes Road, Southern Avenue, and Broadway Road construction costs for Alternatives A, C, and D is shown in the table below. A detailed Conceptual Cost Estimate is included in Appendix 1. The construction cost for Alternative B is less than for Alternative A but was not developed further because Alternatives C and D save much more money.

TABLE 3 **COMPARISON OF CONSTRUCTION COSTS**

Description	Alternative A	Alternative C	Alternative D
Construction Cost	$10,549,565.00	$5,731,301.88	$4,352,851.88
Cost Savings Compared To Alternative A	$0.00	$4,818,263.12	$6,196,713.12

CONCEPTUAL COST ESTIMATE

PROJECT 442-05-01

HAWES ROAD CHANNEL IMPROVEMENTS

SUPERSTITION FREEWAY TO MAIN STREET

			CAR ALTERNATIVE 1		FCD ALTERNATIVE WITHOUT BASIN		FCD ALTERNATIVE WITH BASIN	
DESCRIPTION	UNIT	UNIT COST NUMBERS	APPROX. QUANTITY	EXTENDED AMOUNT	APPROX. QUANTITY	EXTENDED AMOUNT	APPROX. QUANTITY	EXTENDED AMOUNT
REACH 0-1								
SUPERSTITION FREEWAY TO MOBILE HOME PARK ENTRANCE	LF		900		900		900	
REACH LENGTH								
60 Inch RGRCP	LF	$ 255.00	900	$ 229,500.00	-	$ -	-	$ -
Storm Drain Outlet Structure	CY	$ 630.00	40	$ 25,200.00	-	$ -	-	$ -
Hand Rail / Fencing - One side of channel	LF	$ 35.00	850	$ 29,750.00	-	$ -	-	$ -
12 Inch Water Line Relocation	LF	$ 100.00	450	$ 45,000.00	-	$ -	-	$ -
Asphalt Concrete Replacement	SY	$ 15.00	1,083	$ 16,245.00	-	$ -	-	$ -
		Sub-Total		$ 345,695.00		$ -		$ -
Note: Unit Cost Numbers are the same as in the CAR Report.								
REACH 0-2								
MOBILE HOME PARK ENTRANCE TO SOUTHERN AVENUE								
REACH LENGTH	LF		1,080		1,080		1,080	
60 Inch RGRCP	LF	$ 255.00	1,080	$ 275,400.00	-	$ -	-	$ -
Hand Rail / Fencing - One side of channel	LF	$ 35.00	1,080	$ 37,800.00	-	$ -	-	$ -
12 Inch Water Line Relocation	LF	$ 100.00	1,080	$ 108,000.00	-	$ -	-	$ -
Asphalt Concrete Replacement	SY	$ 15.00	1,800	$ 27,000.00	-	$ -	-	$ -
		Sub-Total		$ 448,200.00		$ -		$ -
Note: Unit Cost Numbers are the same as in the CAR Report.								
REACH 0-2								
SOUTHERN AVENUE PROJECT COSTS (POTENTIAL SAVINGS)								
Southern Avenue Concrete Box Culvert 1-10'x6'x3950'	CY	$ 370.00	4,345	$ 1,607,650.00	4,345	$ 1,607,650.00	-	$ -
Hawes Road Channel, Trap Channel BW=10', Z=2.0', D=4.5'	CY	$ 290.00	633	$ 183,570.00	-	$ -	-	$ -
Hawes Road Channel Removal	LF	$ 110.00	1,134	$ 124,740.00	-	$ -	-	$ -
Hawes Road 8'x4' Box Culvert Cell Addition	CY	$ 370.00	82	$ 30,340.00	-	$ -	-	$ -
		Sub-Total		$ 1,946,300.00		$ 1,607,650.00		$ -
Note: Unit Cost Numbers are the same as in the CAR Report.								
REACH 1-1								
SOUTHERN AVENUE TO EMILITA AVENUE								
REACH LENGTH	LF		1,810		1,810		1,810	
60 Inch RGRCP	LF	$ 255.00	1,810	$ 461,550.00		$ -		$ -
Hand Rail / Fencing - One side of channel	LF	$ 35.00	1,810	$ 63,350.00		$ -		$ -
Asphalt Concrete Replacement	SY	$ 15.00	3,017	$ 45,255.00		$ -		$ -
		Sub-Total		$ 570,155.00		$ -		$ -
Note: Unit Cost Numbers are the same as in the CAR Report.								

CONCEPTUAL COST ESTIMATE
PROJECT 442-05-01
HAWES ROAD CHANNEL IMPROVEMENTS
SUPERSTITION FREEWAY TO MAIN STREET

			CAR ALTERNATIVE 1		FCD ALTERNATIVE WITHOUT BASIN		FCD ALTERNATIVE WITH BASIN	
DESCRIPTION	**UNIT**	**UNIT COST NUMBERS**	**APPROX. QUANTITY**		**APPROX. QUANTITY**	**EXTENDED AMOUNT**	**APPROX. QUANTITY**	**EXTENDED AMOUNT**
REACH 2-1								
EMILITA AVENUE TO TRANSITION CHANNEL								
REACH LENGTH	**LF**		**3,030**		**3,030**		**3,030**	
60 Inch RGRCP	LF	$ 255.00	3,030	$ 772,650.00	-	$ -	-	$ -
Concrete Box Culvert: 3-8'x4'x135' (1 Each)	CY	$ 370.00	-	$ -	~~303~~	$ ~~112,110.00~~	303 -	$ 112,110
Concrete Box Culvert: 2-12'x6'x135' (1 Each)	CY	$ 370.00	-	$ -	410	$ 151,700.00	-	$ -
Concrete Box Culvert: 2-12'x6'x45' (3 Each)	CY	$ 370.00	-	$ -	410	$ 151,700.00	410	$ 151,700.00
Concrete Channel Lining (6") - Trap Channel BW=17', Z=1.5, D=7.3'	CY	$ 290.00	2,317	$ 671,930.00	-	$ -	-	$ -
Concrete Channel Lining (6") - Trap Channel BW=20', Z=2.0, D=6.1'	CY	$ 290.00	-	$ -	2,653	$ 769,370.00	2,653	$ 769,370.00
Earthwork / Channel Excavation	CY	$ 11.00	26,170	$ 287,870.00	22,042	$ 242,462.00	22,042	$ 242,462.00
Earthwork / Basin Excavation	CY	$ 6.00	-	$ -	-	$ -	45,200	$ 271,200.00
Hand Rail / Fencing - One side of channel	LF	$ 35.00	3,030	$ 106,050.00	3,030	$ 106,050.00	3,030	$ 106,050.00
Concrete Curb & Gutter (West side Adjacent to channel only)	LF	$ 9.00	3,030	$ 27,270.00	3,030	$ 27,270.00	3,030	$ 27,270.00
Asphalt Concrete Pavement (2 Lanes - 34' wide)	SY	$ 15.00	22,893	$ 343,395.00	22,893	$ 343,395.00	22,893	$ 343,395.00
Remove Existing Channel - the portion north of Emilita Avenue	LF	$ 110.00	80	$ 8,800.00	80	$ 8,800	80 -	$ 8,800
Remove Existing Asphalt Concrete (28' x 1750')	SY	$ 2.50	5,444	$ 13,610.00	5,444	$ 13,610.00	5,444	$ 13,610.00
Gas Line Relocation	LF	$ 35.00	1,750	$ 61,250.00	-	$ -	-	$ -
Land for Retention Basin	ACRE	$ 29,500.00	-	$ -	-	$ -	9	$ 265,500.00
Basin Landscaping	ACRE	$ 20,000.00	-	$ -	-	$ -	9	$ 170,000.00
Half Street Improvements Around Basin	LS	$ 62,000.00	-	$ -	-	$ -	1	$ 62,000.00
		Sub-Total		$ 2,292,825.00		$ 1,917,667.00		$ 2,422,557.00
Note: Unit Cost Numbers are the same as in the CAR Report.								
REACH 2-2								
TRANSITION CHANNEL TO BROADWAY ROAD								
REACH LENGTH	**LF**		**200**		**200**		**200**	
Concrete Box Culvert: 3-10'x6'x180'	CY	$ 370.00	594	$ 219,780.00	-	$ -	-	$ -
Concrete Channel Lining (8"-10") - Trap Channel BW=30', D=7'	CY	$ 370.00	271	$ 100,270.00	-	$ -	-	$ -
Headwall / Inlet Structure	CY	$ 180.00	300	$ 54,000.00	-	$ -	-	$ -
Earthwork / Channel Excavation	CY	$ 11.00	1,727	$ 18,997.00	-	$ -	-	$ -
Hand Rail / Fencing - One side of channel	LF	$ 35.00	200	$ 7,000.00	-	$ -	-	$ -
Concrete Curb & Gutter (West side Adjacent to channel only)	LF	$ 9.00	594	$ 5,346.00	-	$ -	-	$ -
Asphalt Concrete Pavement (2 Lanes - 34' wide)	SY	$ 15.00	1,511	$ 22,665.00	-	$ -	-	$ -
Remove Existing Asphalt Concrete	SY	$ 2.50	889	$ 2,222.50	-	$ -	-	$ -
Gas Line Relocation	LF	$ 35.00	200	$ 7,000.00	-	$ -	-	$ -
60 Inch RGRCP	LF	$ 255.00	210	$ 53,550.00	-	$ -	-	$ -
		Sub-Total		$ 490,830.50		$ -		$ -
Note: Unit Cost Numbers are the same as in the CAR Report.								
Sub-Total: Hawes Road Channel - South of Broadway Road				$ 6,094,005.50		$ 3,525,317.00		$ 2,422,557.00
Engineering and Contingencies		25%		$ 1,523,501.38		$ 881,329.25		$ 605,639.25
Total Hawes Road Channel - South of Broadway Road				$ 7,617,506.88		$ 4,406,646.25		$ 3,028,196.25

CONCEPTUAL COST ESTIMATE

PROJECT 442-05-01
HAWES ROAD CHANNEL IMPROVEMENTS
SUPERSTITION FREEWAY TO MAIN STREET

			CAR ALTERNATIVE 1		FCD ALTERNATIVE WITHOUT BASIN		FCD ALTERNATIVE WITH BASIN	
DESCRIPTION	UNIT	UNIT COST NUMBERS	APPROX. QUANTITY		APPROX. QUANTITY	EXTENDED AMOUNT	APPROX. QUANTITY	EXTENDED AMOUNT
REACH 3-1								
TRANSITION CHANNEL NORTH OF BROADWAY ROAD	LF		300		300		300	
REACH LENGTH								
Concrete Channel Lining (8"-10") - Rectangular Channel BW=20', D=6.5'	CY	$ 370.00	305	$ 112,850.00	-	$ -	-	$ -
Concrete Channel Lining (6") - Trapezoidal Channel BW=8', Z=1.5', D=5.0'	CY	$ 290.00	-	$ -	144	$ 41,760.00	144	$ 41,760.00
Earthwork / Channel Excavation	CY	$ 11.00	1,444	$ 15,884.00	861	$ 9,471.00	861	$ 9,471.00
Hand Rail / Fencing - Two sides of channel	LF	$ 35.00	600	$ 21,000.00	600	$ 21,000.00	600	$ 21,000.00
Concrete Curb & Gutter (Side Adjacent to channel only)	LF	$ 9.00	300	$ 2,700.00	300	$ 2,700.00	300	$ 2,700.00
Asphalt Concrete Pavement (2 Lanes - 34' wide, with 28' to 68' tapers)	SY	$ 15.00	1,600	$ 24,000.00	1,600	$ 24,000.00	1,600	$ 24,000.00
Remove Existing Asphalt Concrete (28' x 100')	SY	$ 2.50	342	$ 855.00	342	$ 855.00	342	$ 855.00
Land Acquisition Cost - Assuming Commercial Zoning	SF	$ 2.97	5,250	$ 15,592.50	11,250	$ 33,412.50	11,250	$ 33,412.50
		Sub-Total		$ 192,881.50		$ 133,198.50		$ 133,198.50
Note: Unit Cost Numbers are the same as in the CAR Report.								
REACH 3-1								
BROADWAY ROAD PROJECT COSTS (POTENTIAL SAVINGS)								
Broadway Road Storm Drain	LS	$ 925,000.00	1	$ 925,000.00	-	$ -	-	$ -
		Sub-Total		$ 925,000.00		$ -		$ -
Note: Unit Cost Numbers are the same as in the CAR Report.								
REACH 3-2								
TRANSITION CHANNEL TO MAIN STREET								
REACH LENGTH	**LF**		**2,250**		**2,250**		**2,250**	
Concrete Channel Lining (6") - Trapezoidal Channel BW=20', Z=1.5', D=5.3'	CY	$ 290.00	1,633	$ 473,570.00	-	$ -	-	$ -
Concrete Channel Lining (8"-10") - Rectangular Channel BW=12', D=5.0'	CY	$ 370.00	-	$ -	1,084	$ 401,080.00	1,084	$ 401,080.00
Drop Structure(s): Seven - 2.0'	SY	$ 180.00	227	$ 40,860.00	227	$ 40,860.00	227	$ 40,860.00
Earthwork / Channel Excavation	CY	$ 11.00	16,275	$ 179,025.00	6,458	$ 71,038.00	6,458	$ 71,038.00
Hand Rail / Fencing - Two sides of channel	LF	$ 35.00	4,500	$ 157,500.00	4,500	$ 157,500.00	4,500	$ 157,500.00
Concrete Curb & Gutter (Side Adjacent to channel only)	LF	$ 9.00	2,250	$ 20,250.00	2,250	$ 20,250.00	2,250	$ 20,250.00
Asphalt Concrete Pavement (2 Lanes - 28' wide)	SY	$ 15.00	7,000	$ 105,000.00	7,000	$ 105,000.00	7,000	$ 105,000.00
Remove Existing Asphalt Concrete (28' Wide)	SY	$ 2.50	7,000	$ 17,500.00	7,000	$ 17,500.00	7,000	$ 17,500.00
						$ -		
		Sub-Total		$ 993,705.00		$ 813,228.00		$ 813,228.00
Note: Unit Cost Numbers are the same as in the CAR Report.								

CONCEPTUAL COST ESTIMATE

PROJECT 442-05-01

HAWES ROAD CHANNEL IMPROVEMENTS

SUPERSTITION FREEWAY TO MAIN STREET

DESCRIPTION	UNIT	UNIT COST NUMBERS	CAR ALTERNATIVE 1 APPROX. QUANTITY	CAR ALTERNATIVE 1	FCD ALTERNATIVE WITHOUT BASIN APPROX. QUANTITY	FCD ALTERNATIVE WITHOUT BASIN EXTENDED AMOUNT	FCD ALTERNATIVE WITH BASIN APPROX. QUANTITY	FCD ALTERNATIVE WITH BASIN EXTENDED AMOUNT
REACH 3-3								
MAIN STREET / APACHE BOULEVARD CHANNEL	LF		365		365		365	
REACH LENGTH								
Concrete Channel Lining (6") - Trapezoidal Channel BW=15', Z=1.5', D=6.3'	CY	$ 290.00	255	$ 73,950.00	-	$ -	-	$ -
Concrete Channel Lining (6") - Trapezoidal Channel BW=8', Z=1.5', D=5.0'	CY	$ 370.00	-	$ -	175	$ 64,750.00	175	$ 64,750.00
Drop Structure(s): Three - 2.0'	SY	$ 180.00	97	$ 17,460.00	-	$ -	-	$ -
Concrete Box Culvert: 2 - 10' x 6' x 90'	CY	$ 370.00	207	$ 76,590.00	-	$ -	-	$ -
Earthwork / Channel Excavation	CY	$ 11.00	2,640	$ 29,040.00	1,048	$ 11,528.00	1,048	$ 11,528.00
Hand Rail / Fencing - Two sides of channel	LF	$ 35.00	730	$ 25,550.00	730	$ 25,550.00	730	$ 25,550.00
Concrete Curb & Gutter (Side Adjacent to channel only)	LF	$ 9.00	730	$ 6,570.00	730	$ 6,570.00	730	$ 6,570.00
Asphalt Concrete Pavement (2 Lanes - 28' wide)	SY	$ 15.00	280	$ 4,200.00	280	$ 4,200.00	280	$ 4,200.00
Remove Existing Asphalt Concrete (28' Wide)	SY	$ 2.50	280	$ 700.00	280	$ 700.00	280	$ 700.00
		Sub-Total		$ 234,060.00		$ 113,298.00		$ 113,298.00
Note: Unit Cost Numbers are the same as in the CAR Report.								
Sub-Total: Hawes Road Channel - North of Broadway Road				$ 2,345,646.50		$ 1,059,724.50		$ 1,059,724.50
Engineering and Contingencies		25%		$ 586,411.63		$ 264,931.13		$ 264,931.13
Total Hawes Road Channel - North of Broadway Road				$ 2,932,058.13		$ 1,324,655.63		$ 1,324,655.63
Grand Total: Hawes Road Channel				$ 10,549,565.00		$ 5,731,301.88		$ 4,352,851.88
From the Superstition Freeway to Main Street								

CONCEPTUAL COST ESTIMATE SUMMARY

PROJECT 442-05-01
HAWES ROAD CHANNEL IMPROVEMENTS
SUPERSTITION FREEWAY TO MAIN STREET

REACH #	DESCRIPTION	CAR ALTERNATIVE 1 ESTIMATE	FCD ESTIMATE WITHOUT BASIN	FCD ESTIMATE WITH BASIN
REACH 0-1	SUPERSTITION FREEWAY TO MOBILE HOME PARK ENTRANCE	$ 345,695.00	$ -	$ -
REACH 0-2	MOBILE HOME PARK ENTRANCE TO SOUTHERN AVENUE	$ 448,200.00	$ -	$ -
REACH 0-2	SOUTHERN AVENUE PROJECT COSTS (POTENTIAL SAVINGS)	$ 1,946,300.00	$ 1,607,650.00	$ -
REACH 1-1	SOUTHERN AVENUE TO EMILITA AVENUE	$ 570,155.00	$ -	$ -
REACH 2-1	EMILITA AVENUE TO TRANSITION CHANNEL	$ 2,292,825.00	$ 1,917,667.00	$ 2,422,557.00
REACH 2-2	TRANSITION CHANNEL TO BROADWAY ROAD	$ 490,830.50	$ -	$ -
REACH 3-1	TRANSITION CHANNEL NORTH OF BROADWAY ROAD	$ 192,881.50	$ 133,198.50	$ 133,198.50
REACH 3-1	BROADWAY ROAD PROJECT COSTS (POTENTIAL SAVINGS)	$ 925,000.00	$ -	$ -
REACH 3-2	TRANSITION CHANNEL TO MAIN STREET	$ 993,705.00	$ 813,228.00	$ 813,228.00
REACH 3-3	MAIN STREET / APACHE BOULEVARD CHANNEL	$ 234,060.00	$ 113,298.00	$ 113,298.00
	SUB-TOTALS	$ 8,439,652.00	$ 4,585,041.50	$ 3,482,281.50
	ENGINEERING AND CONTINGENCIES (25%)	$ 2,109,913.00	$ 1,146,260.38	$ 870,570.38
	TOTALS	$ 10,549,565.00	$ 5,731,301.88	$ 4,352,851.88
	COST SAVINGS COMPARED TO CAR ALTERNATIVE 1	$ -	$ 4,818,263.13	$ 6,196,713.13

Broadway Road Storm Drain Cost Savings

Description	Units	Unit Cost	Current Plan Qty	Current Plan Amount	Alternate Plan Qty	Alternate Plan Amount
10x4 CBC	LF	$ 425	1,490	633,250	-	-
72" Pipe	LF	$ 250	3,925	981,250	-	-
54" Pipe	LF	$ 165	-	-	2,240	369,600
48" Pipe	LF	$ 135	-	-	1,158	156,330
42" Pipe	LF	$ 120	-	-	1,140	136,800
36" Pipe	LF	$ 100	-	-	342	34,200
Manholes	Ea	$ 4,000	8	32,000	6	24,000
				1,646,500		**720,930**
*Savings					**925,570**	

* Savings are based upon only common items that can be downsized as a result of not diverting 360 cfs from the Hawes Road Channel into the Broadway Road Storm Drain. The total amounts do not indicate total project costs for either plan. The assumption for the sizing the Alternate Plan is based upon similar storm drains with similar watersheds.

Existing Channel, Reach 0-1
Worksheet for Trapezoidal Channel

Project Description	
Project File	s:\eng\hawesrd\hydraulics\project1.fm2
Worksheet	Existing Channel, Reach 0-1
Flow Element	Trapezoidal Channel
Method	Manning's Formula
Solve For	Discharge

Input Data		
Mannings Coefficient	0.020	
Channel Slope	0.002200	ft/ft
Depth	4.00	ft
Left Side Slope	2.200000	H : V
Right Side Slope	1.900000	H : V
Bottom Width	9.70	ft

Results		
Discharge	462.46	cfs
Flow Area	71.60	ft^2
Wetted Perimeter	27.95	ft
Top Width	26.10	ft
Critical Depth	3.27	ft
Critical Slope	0.004889	ft/ft
Velocity	6.46	ft/s
Velocity Head	0.65	ft
Specific Energy	4.65	ft
Froude Number	0.69	
Flow is subcritical.		

Notes:

This section is at bank full condition. No freeboard is included. Finish is a rough broom finish.

Existing Channel, Reach 0-1
Cross Section for Trapezoidal Channel

Project Description	
Project File	s:\eng\hawesrd\hydraulics\project1.fm2
Worksheet	Existing Channel, Reach 0-1
Flow Element	Trapezoidal Channel
Method	Manning's Formula
Solve For	Discharge

Section Data		
Mannings Coefficient	0.020	
Channel Slope	0.002200	ft/ft
Depth	4.00	ft
Left Side Slope	2.200000	H : V
Right Side Slope	1.900000	H : V
Bottom Width	9.70	ft
Discharge	462.46	cfs

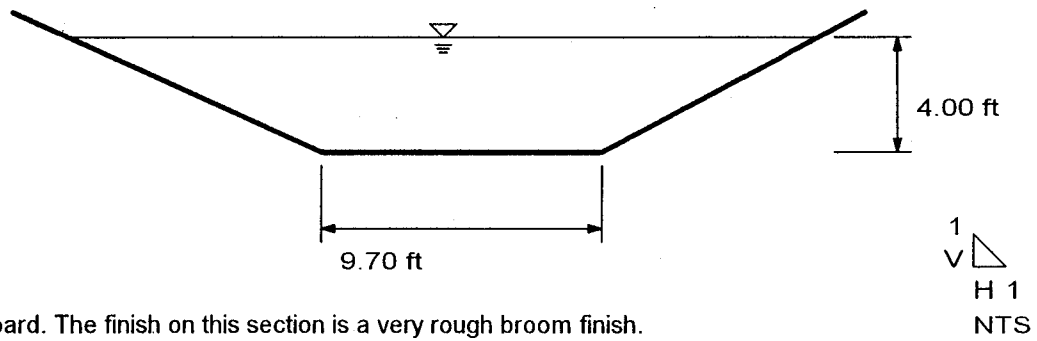

Notes:

This section does not include any freeboard. The finish on this section is a very rough broom finish.

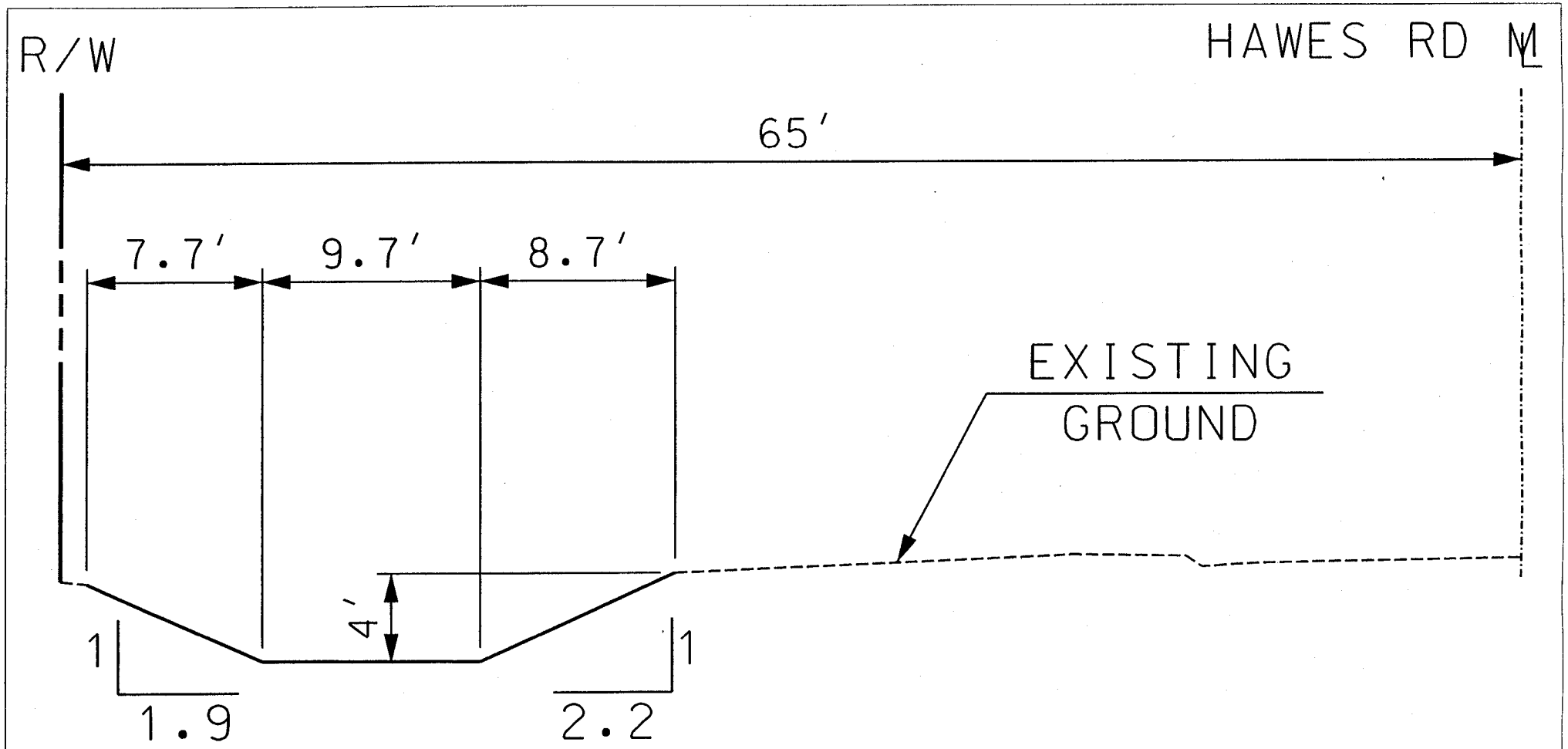

TYPICAL SECTION

REACH 0-1

(1600' SOUTH OF SOUTHERN AVE)

s:\ENG\HawesRd\DGN\es_xsect.dgn Aug. 26, 1999 12:55:59

Improved Channel, Reach 0-2
Worksheet for Trapezoidal Channel

Project Description	
Project File	s:\eng\hawesrd\hydraulics\project1.fm2
Worksheet	Improved Channel, Reach 0-2
Flow Element	Trapezoidal Channel
Method	Manning's Formula
Solve For	Discharge

Input Data		
Mannings Coefficient	0.020	
Channel Slope	0.002300	ft/ft
Depth	4.20	ft
Left Side Slope	2.200000	H : V
Right Side Slope	2.200000	H : V
Bottom Width	6.60	ft

Results		
Discharge	433.52	cfs
Flow Area	66.53	ft^2
Wetted Perimeter	26.90	ft
Top Width	25.08	ft
Critical Depth	3.52	ft
Critical Slope	0.004836	ft/ft
Velocity	6.52	ft/s
Velocity Head	0.66	ft
Specific Energy	4.86	ft
Froude Number	0.71	
Flow is subcritical.		

Notes:

This section does not include any freeboard.

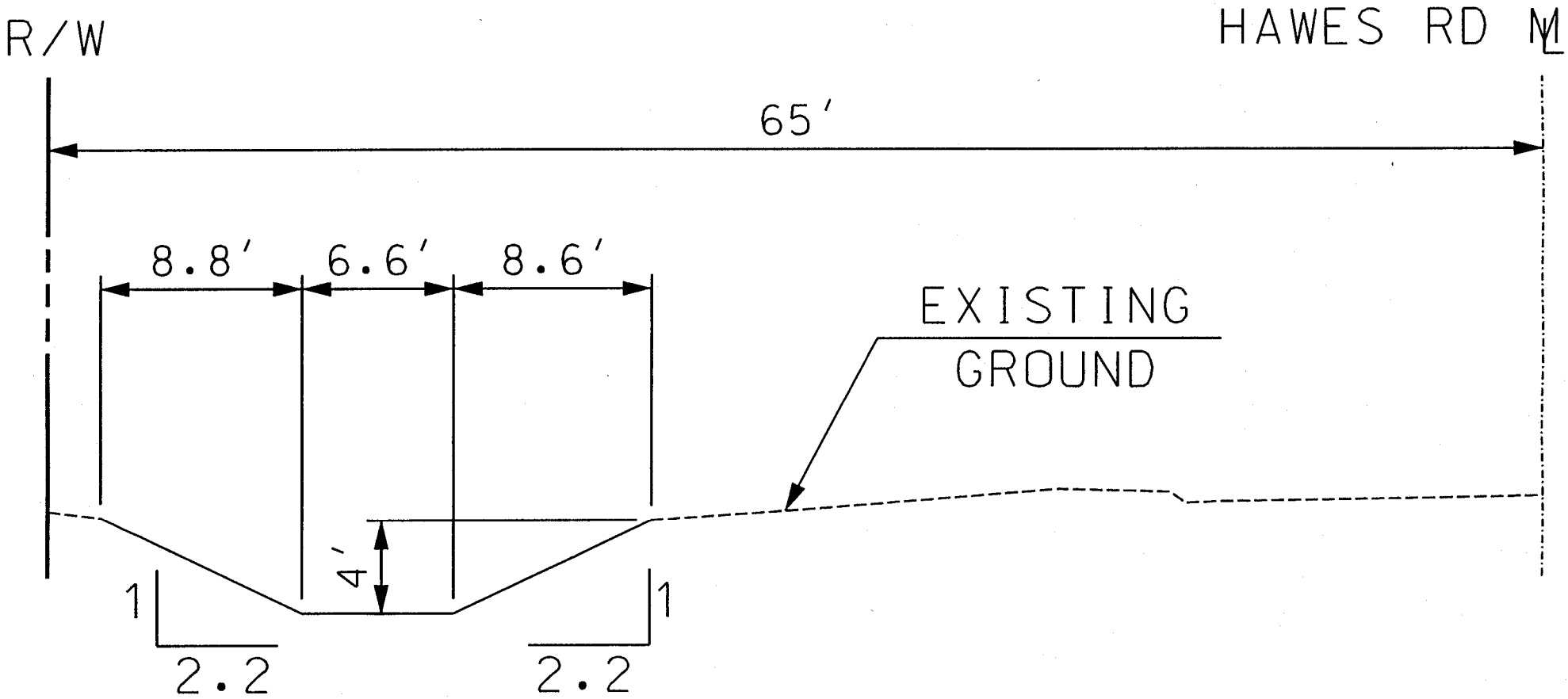

TYPICAL SECTION

REACH 0-2

(700' SOUTH OF SOUTHERN AVE)

s:\ENG\HawesRd\DGN\es_xsect.dgn Aug. 26, 1999 12:57:42

Improved Channel, Reach 0-2
Cross Section for Trapezoidal Channel

Project Description	
Project File	s:\eng\hawesrd\hydraulics\project1.fm2
Worksheet	Improved Channel, Reach 0-2
Flow Element	Trapezoidal Channel
Method	Manning's Formula
Solve For	Discharge

Section Data		
Mannings Coefficient	0.020	
Channel Slope	0.002300	ft/ft
Depth	4.20	ft
Left Side Slope	2.200000	H : V
Right Side Slope	2.200000	H : V
Bottom Width	6.60	ft
Discharge	433.52	cfs

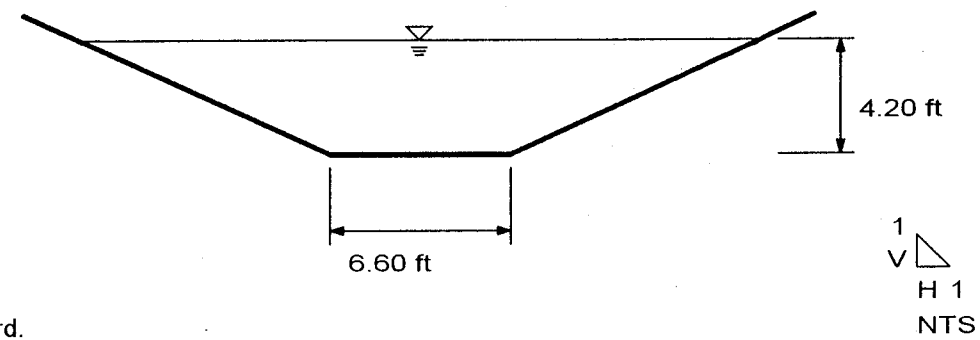

Notes:

This section does not include any freeboard.

Existing Channel, Reach 1-1
Worksheet for Trapezoidal Channel

Project Description	
Project File	s:\eng\hawesrd\hydraulics\project1.fm2
Worksheet	Existing Channel, Reach 1-1
Flow Element	Trapezoidal Channel
Method	Manning's Formula
Solve For	Discharge

Input Data		
Mannings Coefficient	0.020	
Channel Slope	0.003200	ft/ft
Depth	4.40	ft
Left Side Slope	1.900000	H : V
Right Side Slope	2.200000	H : V
Bottom Width	16.70	ft

Results		
Discharge	1,006.17	cfs
Flow Area	113.17	ft^2
Wetted Perimeter	36.78	ft
Top Width	34.74	ft
Critical Depth	4.06	ft
Critical Slope	0.004326	ft/ft
Velocity	8.89	ft/s
Velocity Head	1.23	ft
Specific Energy	5.63	ft
Froude Number	0.87	
Flow is subcritical.		

Notes:

This section is flowing bank full and does not have any freeboard.

Existing Channel, Reach 1-1
Cross Section for Trapezoidal Channel

Project Description	
Project File	s:\eng\hawesrd\hydraulics\project1.fm2
Worksheet	Existing Channel, Reach 1-1
Flow Element	Trapezoidal Channel
Method	Manning's Formula
Solve For	Discharge

Section Data		
Mannings Coefficient	0.020	
Channel Slope	0.003200	ft/ft
Depth	4.40	ft
Left Side Slope	1.900000	H : V
Right Side Slope	2.200000	H : V
Bottom Width	16.70	ft
Discharge	1,006.17	cfs

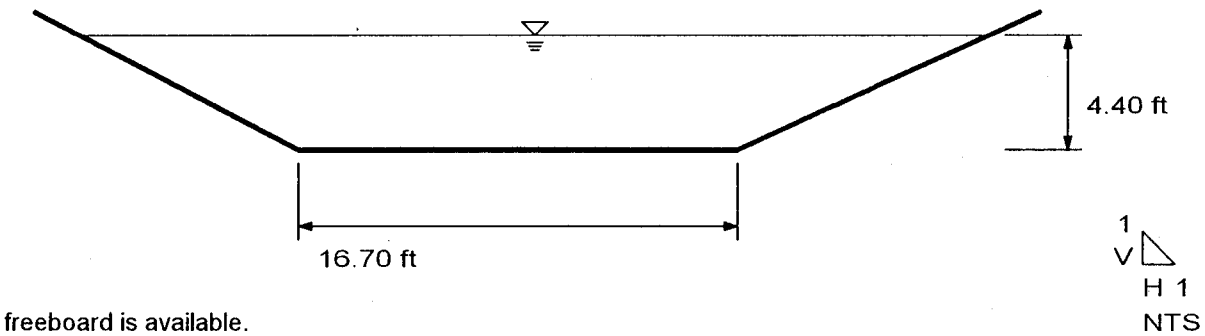

Notes:

Channel is flowing bank full. No freeboard is available.

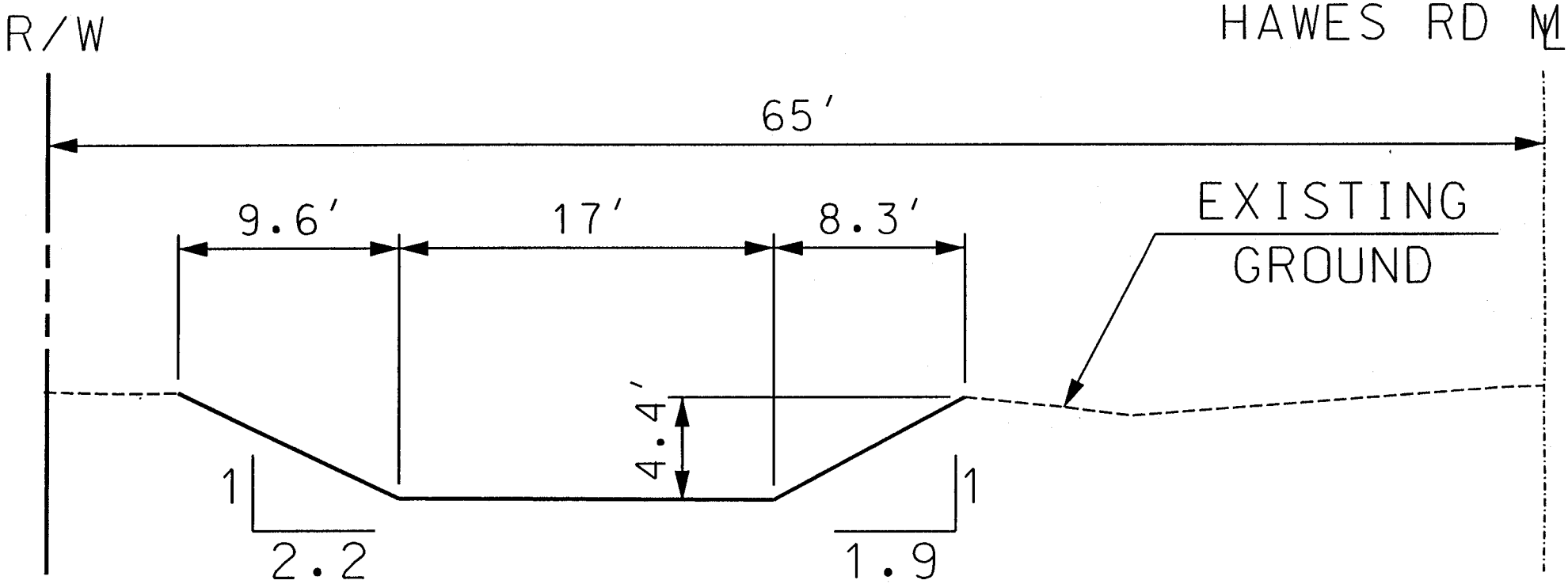

TYPICAL SECTION

REACH 1-1

(800' NORTH OF SOUTHERN AVE)

s:\ENG\HawesRd\DGN\es_xsect.dgn Aug. 26, 1999 12:57:54

Scenario: Base

Broadway Road Storm Drain wihtout a divert @ Hawes Road

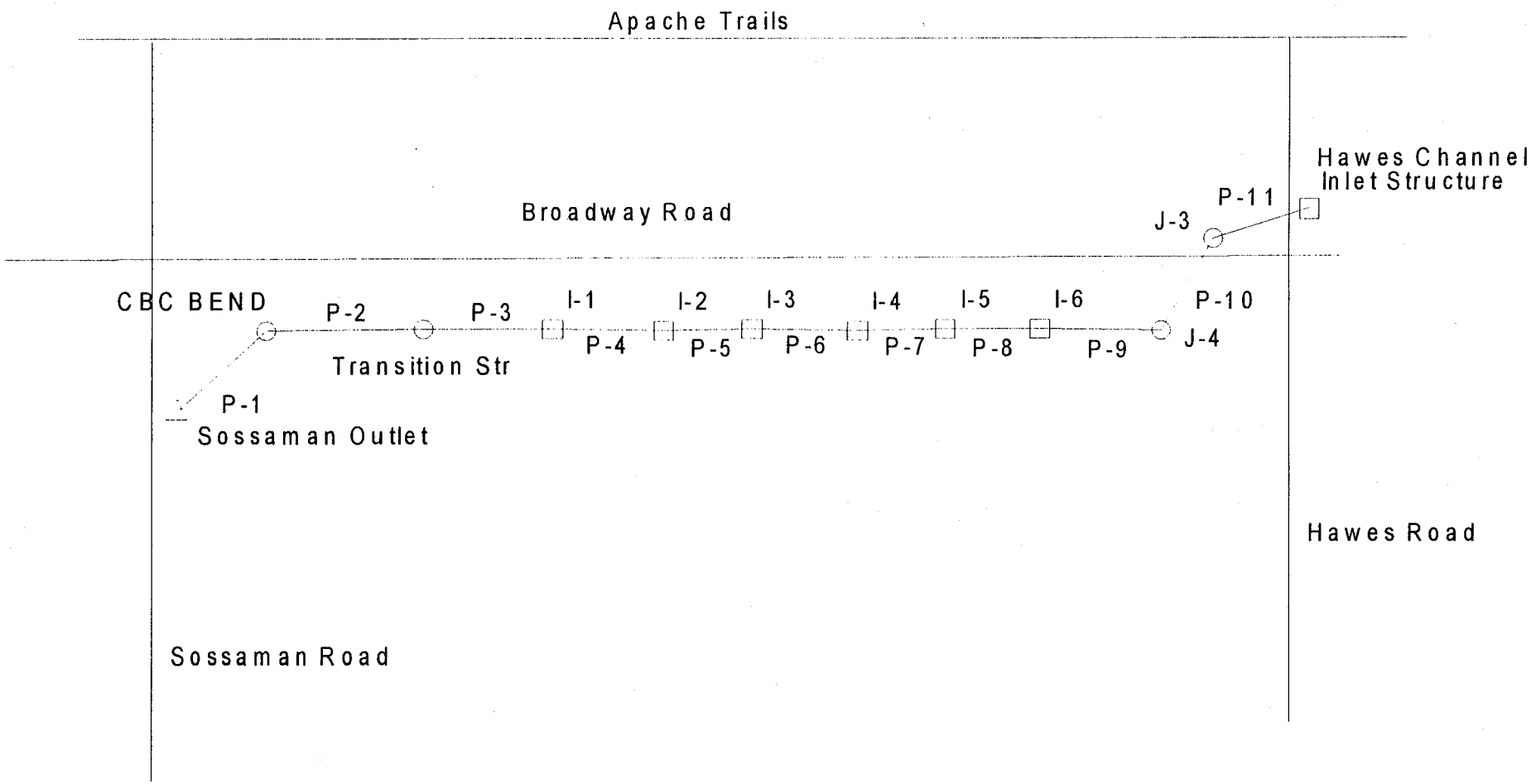

Broadway Road Storm Drain

Label	Length (ft)	Section Size	
		Proposed	Revised*
P-1	70	10 x 4 ft	54
P-2	1,420.00	10 x 4 ft	54
P-3	750	72	54
P-4	497	72	48
P-5	661	72	48
P-6	660	72	42
P-7	480	72	42
P-8	342	72	36
P-9	300	72	n/a
P-10	82	72	n/a
P-11	153	72	n/a

* Sizing is based upon similar projects. Hydrologic analysis for this SD was been prepared by City of Mesa and was unavailable for validating alternate sizing.

Reach 2-1, Basin Weir Section
Worksheet for Trapezoidal Channel

Project Description	
Project File	s:\eng\hawesrd\hydraulics\project1.fm2
Worksheet	Improved Channel, Reach 2-1.1
Flow Element	Trapezoidal Channel
Method	Manning's Formula
Solve For	Channel Depth

Input Data		
Mannings Coefficient	0.018	
Channel Slope	0.001200	ft/ft
Left Side Slope	2.000000	H : V
Right Side Slope	2.000000	H : V
Bottom Width	28.00	ft
Discharge	1,435.00	cfs

Results		
Depth	5.24	ft
Flow Area	201.77	ft^2
Wetted Perimeter	51.45	ft
Top Width	48.97	ft
Critical Depth	3.93	ft
Critical Slope	0.003378	ft/ft
Velocity	7.11	ft/s
Velocity Head	0.79	ft
Specific Energy	6.03	ft
Froude Number	0.62	
Flow is subcritical.		

Reach 2-1, Basin Weir Section
Worksheet for Trapezoidal Channel

Project Description	
Project File	s:\eng\hawesrd\hydraulics\project1.fm2
Worksheet	Improved Channel, Reach 2-1.1
Flow Element	Trapezoidal Channel
Method	Manning's Formula
Solve For	Channel Depth

Input Data		
Mannings Coefficient	0.018	
Channel Slope	0.001200	ft/ft
Left Side Slope	2.000000	H : V
Right Side Slope	2.000000	H : V
Bottom Width	28.00	ft
Discharge	800.00	cfs

Results		
Depth	3.78	ft
Flow Area	134.60	ft^2
Wetted Perimeter	44.92	ft
Top Width	43.14	ft
Critical Depth	2.74	ft
Critical Slope	0.003706	ft/ft
Velocity	5.94	ft/s
Velocity Head	0.55	ft
Specific Energy	4.33	ft
Froude Number	0.59	
Flow is subcritical.		

Hawes Road Basin
Weir Stage Storage Curves

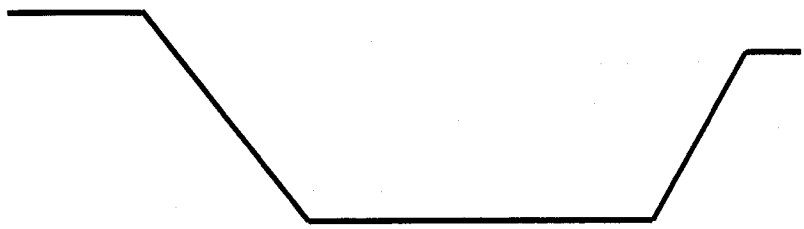

Weir Length

$Q=CLH^{3/2}$

C = 2.5
Channel Depth (ft) = 5.24
Available Length (ft) = 450
Initial Q (cfs) = 1435
Bottom Width = 28
Slope = 0.0012
Roughness = 0.018

Bypass Q (cfs)	Weir Discharge	*Depth (ft)	H (ft)	$H^{3/2}$	L (ft)	Check
1000	400	4.29	0.95	0.93	173	OK
900	502	4.04	1.2	1.31	153	OK
800	602	3.78	1.46	1.76	136	OK

* See Haestad Printout

Basin Volume

	Elev	Incremental Depth (ft)	Area (sq-ft)	Volume cu-ft) Per Ft	Cumm (Ac-Ft)
Basin Bottom	1454		233620		
		1		239,422	
	1455		245224		5.5
		1		251,138	
	1456		257052		11.3
		1		263,080	
	1457		269107		17.3
		1		275,247	
	1458		281387		23.6
		1		287,640	
	1459		293893		30.2
Basin		1		300,259	
Top	1460		306625		37.1

Improved Channel, Reach 3-1(450cfs)
Worksheet for Trapezoidal Channel

Project Description	
Project File	s:\eng\hawesrd\hydraulics\project1.fm2
Worksheet	Improved Channel, Reach 3-1
Flow Element	Trapezoidal Channel
Method	Manning's Formula
Solve For	Channel Depth

Input Data		
Mannings Coefficient	0.018	
Channel Slope	0.003000	ft/ft
Left Side Slope	1.500000	H : V
Right Side Slope	1.500000	H : V
Bottom Width	8.00	ft
Discharge	450.00	cfs

Results		
Depth	3.93	ft
Flow Area	54.58	ft^2
Wetted Perimeter	22.16	ft
Top Width	19.79	ft
Critical Depth	3.65	ft
Critical Slope	0.003979	ft/ft
Velocity	8.25	ft/s
Velocity Head	1.06	ft
Specific Energy	4.98	ft
Froude Number	0.88	
Flow is subcritical.		

Improved Channel, Reach 3-1(450cfs)
Cross Section for Trapezoidal Channel

Project Description	
Project File	s:\eng\hawesrd\hydraulics\project1.fm2
Worksheet	Improved Channel, Reach 3-1
Flow Element	Trapezoidal Channel
Method	Manning's Formula
Solve For	Channel Depth

Section Data		
Mannings Coefficient	0.018	
Channel Slope	0.003000	ft/ft
Depth	3.93	ft
Left Side Slope	1.500000	H : V
Right Side Slope	1.500000	H : V
Bottom Width	8.00	ft
Discharge	450.00	cfs

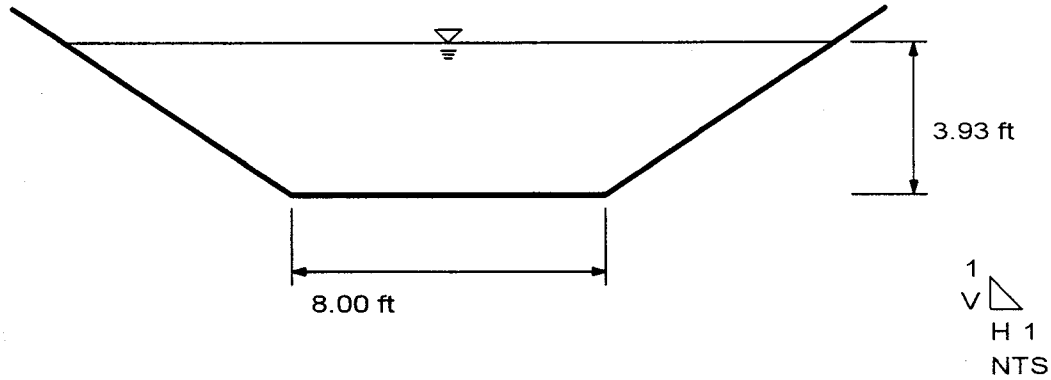

Improved Channel,Reach 3-2 (450cfs)
Worksheet for Rectangular Channel

Project Description	
Project File	s:\eng\hawesrd\hydraulics\project1.fm2
Worksheet	Improved Channel, Reach 3-2 (Rect)
Flow Element	Rectangular Channel
Method	Manning's Formula
Solve For	Channel Depth

Input Data		
Mannings Coefficient	0.013	
Channel Slope	0.002200	ft/ft
Bottom Width	12.00	ft
Discharge	450.00	cfs

Results		
Depth	3.93	ft
Flow Area	47.16	ft^2
Wetted Perimeter	19.86	ft
Top Width	12.00	ft
Critical Depth	3.52	ft
Critical Slope	0.002996	ft/ft
Velocity	9.54	ft/s
Velocity Head	1.42	ft
Specific Energy	5.34	ft
Froude Number	0.85	
Flow is subcritical.		

Improved Channel,Reach 3-2(450cfs)
Cross Section for Rectangular Channel

Project Description	
Project File	s:\eng\hawesrd\hydraulics\project1.fm2
Worksheet	Improved Channel, Reach 3-2 (Rect)
Flow Element	Rectangular Channel
Method	Manning's Formula
Solve For	Channel Depth

Section Data		
Mannings Coefficient	0.013	
Channel Slope	0.002200	ft/ft
Depth	3.93	ft
Bottom Width	12.00	ft
Discharge	450.00	cfs

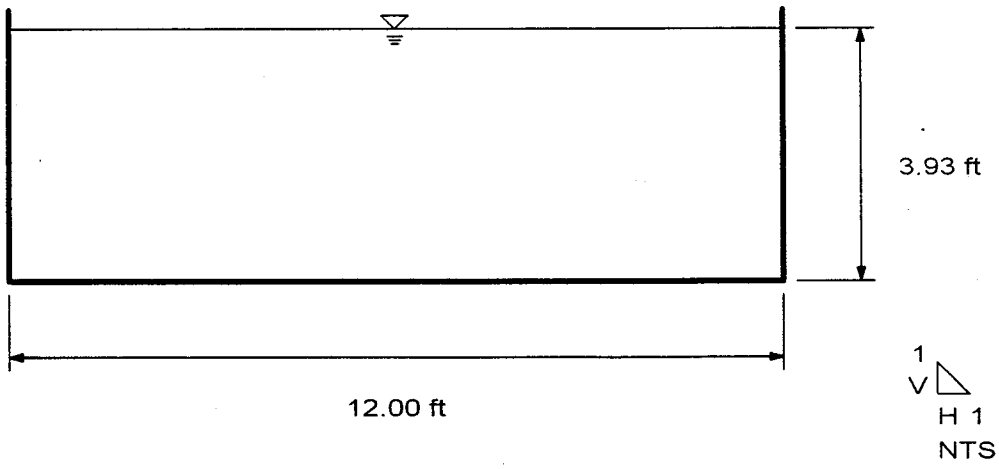

CHART I

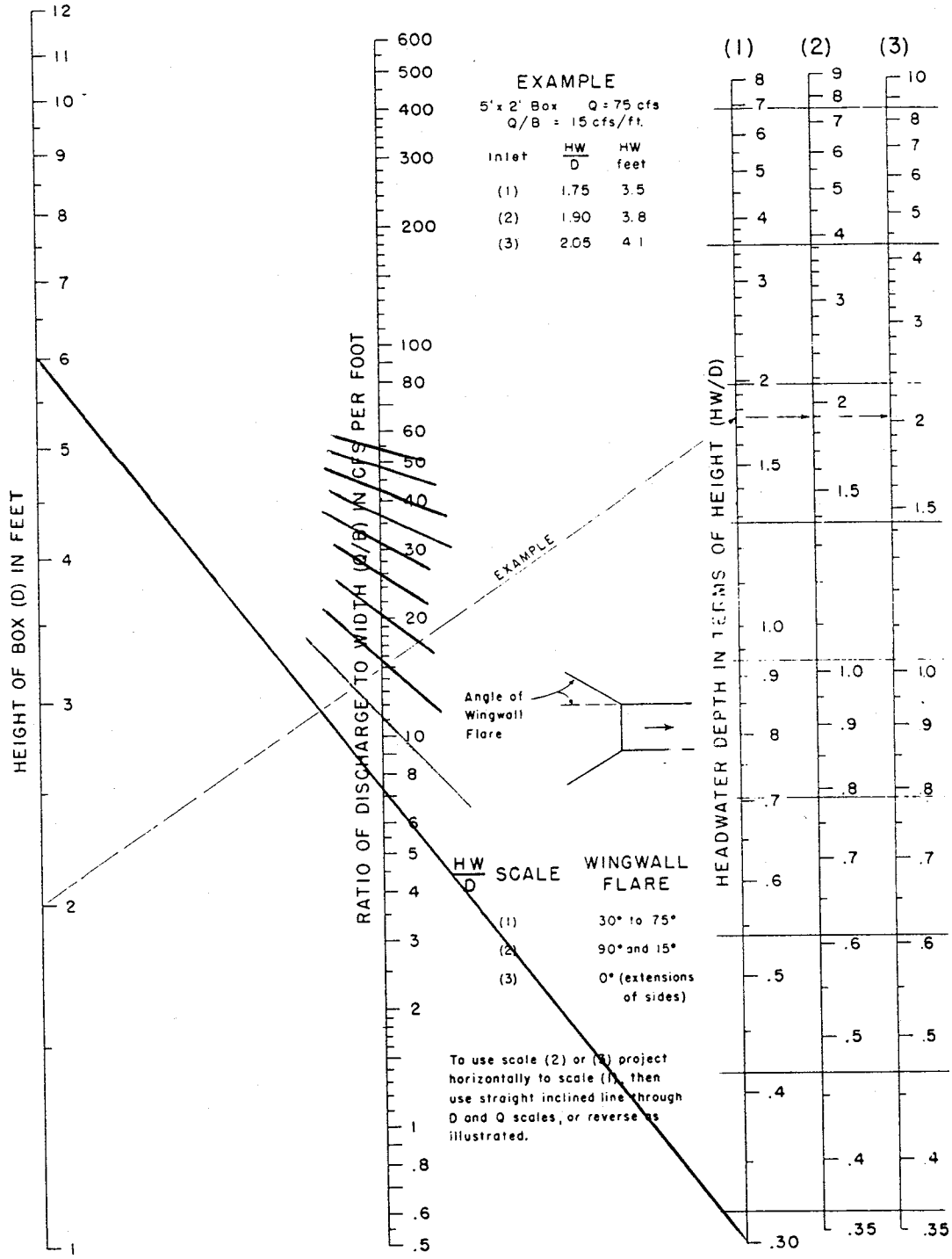

HEADWATER DEPTH FOR BOX CULVERTS WITH INLET CONTROL

BUREAU OF PUBLIC ROADS JAN. 1963

CHART I

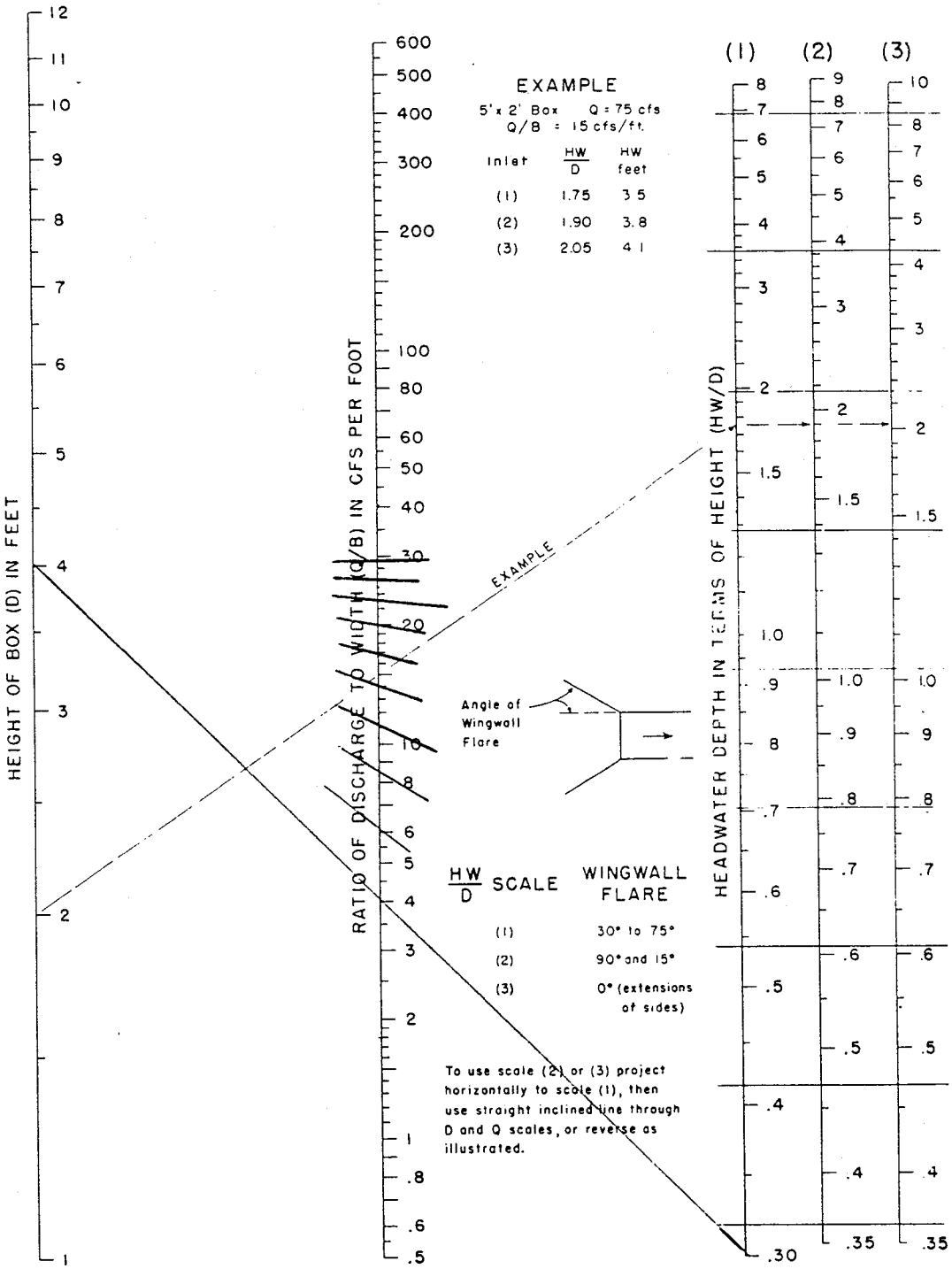

HEADWATER DEPTH FOR BOX CULVERTS WITH INLET CONTROL

BUREAU OF PUBLIC ROADS JAN. 1963

Hawes Road Improvements

Culvert Capacity Rating Curves for the Culverts at Hawes Road Southern Avenue

2-8'x4' CBC south and 2-10'x6' CBC facing west at the intersection of Southern Avenue and Hawes Road -- The 10'x 6' CBC to the west has an invert set 2' below the 4' CBC.

Invert Elevation 1434.4

WSE	2-8x4	2-10x6	Combined	Depth
1434.4	0	0	0	0.0
1436.2	0	144	144	1.8
1436.4	0	182	182	2.0
1436.8	21	220	241	2.4
1437.4	43	316	359	3.0
1437.6	64	358	422	3.2
1438.0	96	400	496	3.6
1438.4	141	460	601	4.0
1438.6	159	520	679	4.2
1438.8	176	580	756	4.4
1439.2	224	640	864	4.8
1439.6	272	690	962	5.2
1439.8	296	740	1036	5.4
1440.0	320	800	1120	5.6
1440.4	368	860	1228	6.0
1440.8	416	920	1336	6.4
1441.0	444	980	1424	6.6
1441.2	472	1030	1502	6.8
1441.6	472	1080	1552	7.2

Hawes Road Improvements

Culvert Capacity Rating Curves for the Culverts at Hawes Road Southern Avenue

2-8'x4' CBC south and 1-10'x6' CBC facing west at the intersection of Southern Avenue and Hawes Road -- The 10'x6' CBC to the west has an invert set 2' below the 4' CBC.

Invert Elevation 1434.4

WSE	2-8x4	1-10x6	Combined	Depth
1434.4	0	0	0	0.0
1436.2	0	72	72	1.8
1436.4	0	91	91	2.0
1436.8	21	110	131	2.4
1437.4	43	158	201	3.0
1437.6	64	179	243	3.2
1438.0	96	200	296	3.6
1438.4	141	230	371	4.0
1438.6	159	260	419	4.2
1438.8	176	290	466	4.4
1439.2	224	320	544	4.8
1439.6	272	345	617	5.2
1439.8	296	370	666	5.4
1440.0	320	400	720	5.6
1440.4	368	430	798	6.0
1440.8	416	460	876	6.4
1441.0	444	490	934	6.6
1441.2	472	515	987	6.8
1441.6	472	540	1012	7.2

Hawes Road Improvements

Culvert Capacity Rating Curves for the Culverts at Hawes Road Southern Avenue

3-8'x4' CBC south and 2-10'x6' CBC facing west at the intersection of Southern Avenue and Hawes Road -- The 10'x 6' CBC to the west has an invert set 2' below the 4' CBC.

Invert Elevation 1434.4

WSE	3-8x4	2-10x6	Combined	Depth
1434.4	0	0	0	0.0
1436.2	0	144	144	1.8
1436.4	0	182	182	2.0
1436.8	32	220	252	2.4
1437.4	64	316	380	3.0
1437.6	96	358	454	3.2
1438.0	144	400	544	3.6
1438.4	211	460	671	4.0
1438.6	238	520	758	4.2
1438.8	264	580	844	4.4
1439.2	336	640	976	4.8
1439.6	408	690	1098	5.2
1439.8	444	740	1184	5.4
1440.0	480	800	1280	5.6
1440.4	552	860	1412	6.0
1440.8	624	920	1544	6.4
1441.0	666	980	1646	6.6
1441.2	708	1030	1738	6.8
1441.6	750	1080	1830	7.2

Hawes Road Improvements

Culvert Capacity Rating Curves for the Culverts at Hawes Road Southern Avenue

2-8'x4' CBC south and 1-12'x6' CBC facing west at the intersection of Southern Avenue and Hawes Road -- The 10'x 6' CBC to the west has an invert set 2' below the 4' CBC.

Invert Elevation 1434.4

WSE	2-8x4	1-12x6	Combined	Depth
1436.4	0	0	0	2.0
1436.8	0	86	86	2.4
1437.4	0	109	109	3.0
1437.6	21	132	153	3.2
1438.0	43	190	233	3.6
1438.4	64	215	279	4.0
1438.6	96	240	336	4.2
1438.8	141	276	417	4.4
1439.2	159	312	471	4.8
1439.6	176	348	524	5.2
1439.8	224	384	608	5.4
1440.0	272	414	686	5.6
1440.4	296	444	740	6.0
1440.8	320	480	800	6.4
1441.0	368	516	884	6.6
1441.2	416	552	968	6.8
1441.6	444	588	1032	7.2
1434.4	472	618	1090	0.0
1434.4	502	648	1150	0.0

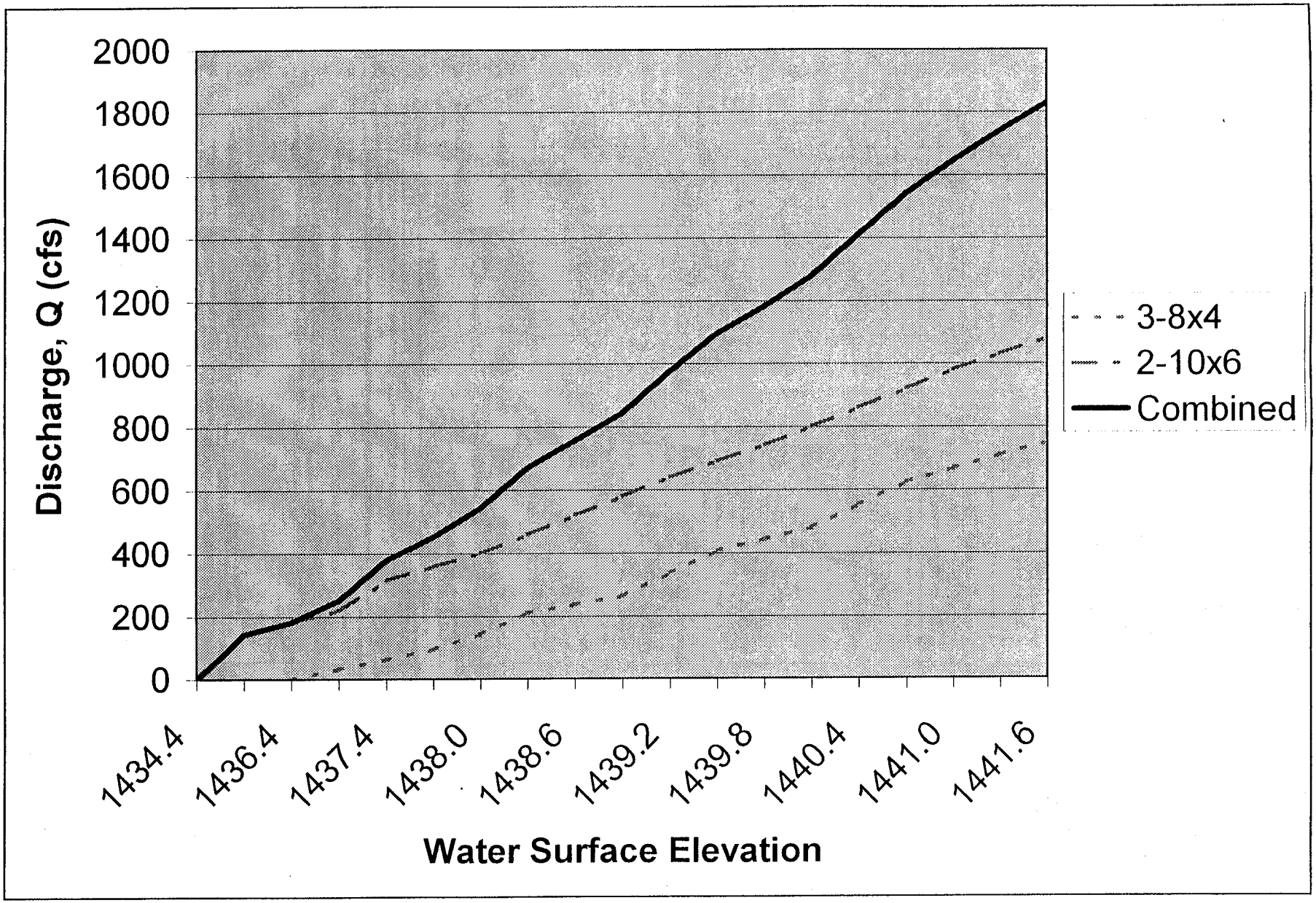
Discharge, Q (cfs)
2000
1800
1600
1400
1200
1000
800
600
400
200
0
1434.4
1436.4
1437.4
1438.0
1438.6
1439.2
1439.8
1440.4
1441.0
1441.6
Water Surface Elevation
3-8x4
2-10x6
Combined

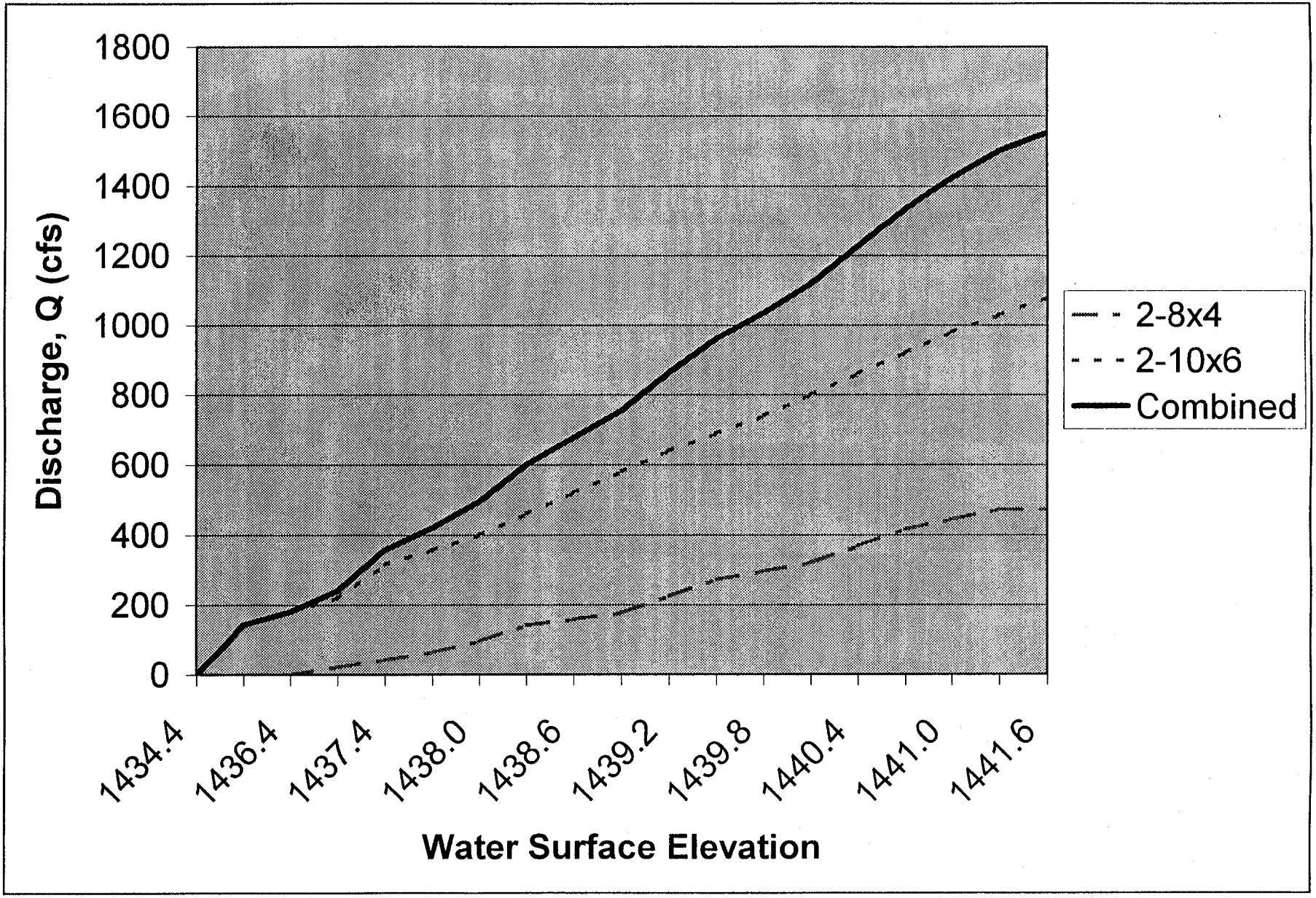
1800
1600
1400
1200
1000
800
600
400
200
0
Discharge, Q (cfs)
1434.4
1436.4
1437.4
1438.0
1438.6
1439.2
1439.8
1440.4
1441.0
1441.6
Water Surface Elevation
2-8x4
2-10x6
Combined

PLAN B

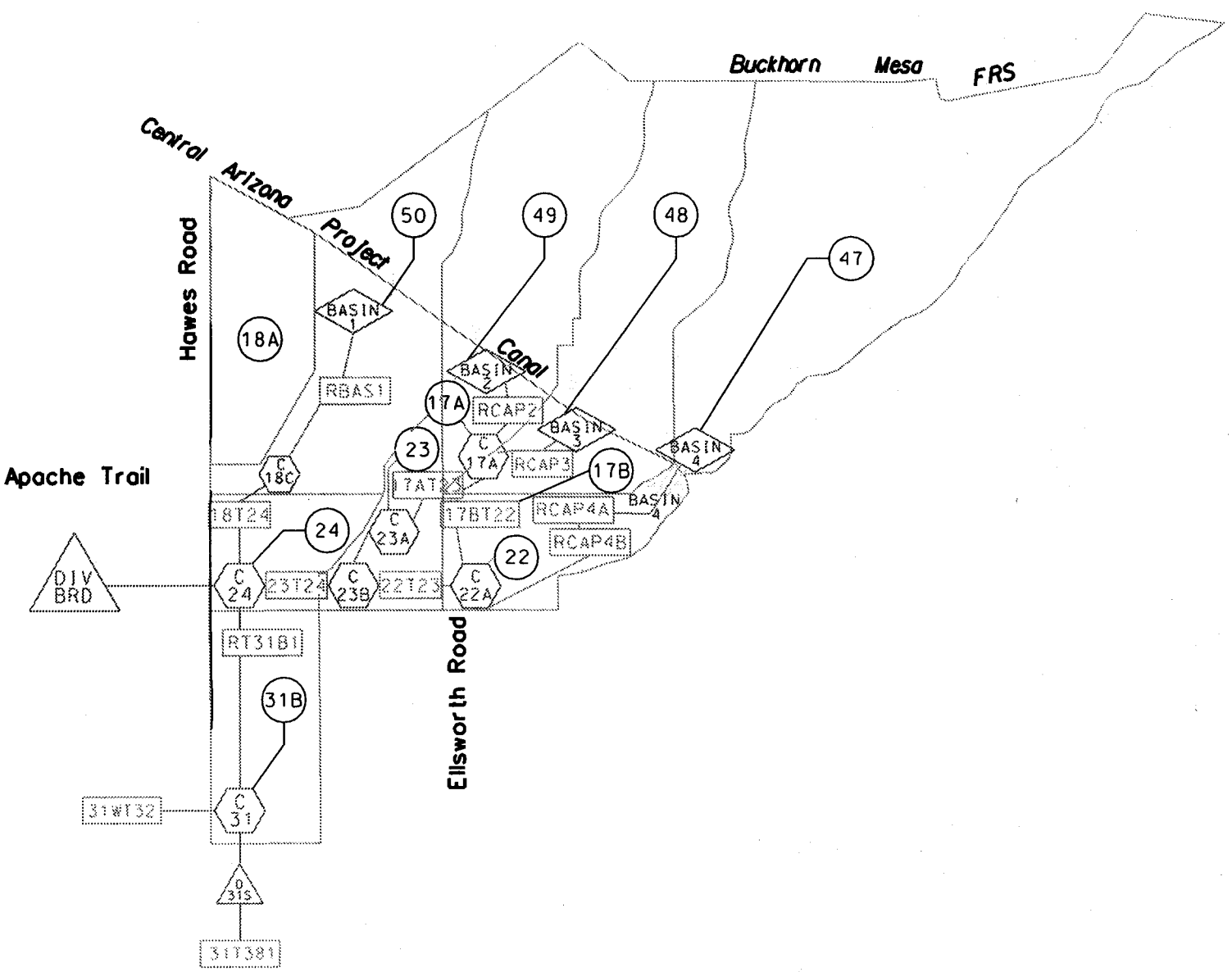
Buckhorn Mesa FRS
Central Arizona Project Canal
Hawes Road
Apache Trail
Ellsworth Road
50
49
48
47
18A
BASIN 1
RBAS1
BASIN 2
17A
RCAP2
BASIN 3
23
C 17A
RCAP3
17B
BASIN 4
C 18C
17AT24
18T24
24
C 23A
17BT22
RCAP4A
BASIN 4
RCAP4B
22
DIV BRD
C 24
23T24
C 23B
22T23
C 22A
RT31B1
31B
31WT32
C 31
0 31S
31T381

```
*************************************
*************************************
                                    *                                                    *
 FLOOD HYDROGRAPH PACKAGE  (HEC-1)  *                                                    *    U.S. ARMY CORPS OF
INEERS     *
            JUL   1997              *                                                    *    HYDROLOGIC ENGINEERING
TER     *
          VERSION 4.1               *                                                    *          609 SECOND STREET
                                    *                                                    *       DAVIS, CALIFORNIA 9561
 RUN DATE   25AUG99  TIME  10:58:39 *                                                    *           (916) 756-1104
                                    *                                                    *
*************************************
*************************************
```

```
X     X  XXXXXXX   XXXXX          X
X     X  X        X     X        XX
X     X  X        X              X
XXXXXXX  XXXX     X        XXXXX X
X     X  X        X              X
X     X  X        X     X        X
X     X  XXXXXXX   XXXXX        XXX
```

THIS PROGRAM REPLACES ALL PREVIOUS VERSIONS OF HEC-1 KNOWN AS HEC1 (JAN 73), HEC1GS, HEC1DB, AND HEC1KW.

THE DEFINITIONS OF VARIABLES -RTIMP- AND -RTIOR- HAVE CHANGED FROM THOSE USED WITH THE 1973-STYLE INPUT
UCTURE.

THE DEFINITION OF -AMSKK- ON RM-CARD WAS CHANGED WITH REVISIONS DATED 28 SEP 81. THIS IS THE FORTRAN77 VERSION
NEW OPTIONS: DAMBREAK OUTFLOW SUBMERGENCE , SINGLE EVENT DAMAGE CALCULATION, DSS:WRITE STAGE FREQUENCY,
DSS:READ TIME SERIES AT DESIRED CALCULATION INTERVAL LOSS RATE:GREEN AND AMPT INFILTRATION
KINEMATIC WAVE: NEW FINITE DIFFERENCE ALGORITHM

HEC-1 INPUT PAGE 1

```
LINE          ID.......1.......2.......3.......4.......5.......6.......7.......8.......9......10

  1           ID
  2           ID   ORIGINAL MODEL FROM THE EAST MESA ADMP
  3           ID   LANDUSE IS OF THE FUTURE CONDITION
  4           ID   SOME ROUTINGS WERE TAKEN FROM THE DIBBLE MODEL(NDIF.DAT) AS PROVIDED FOR THE
  5           ID   DRAINAGE IMPROVEMENTS ASSOCIATED WITH THE CAP BASINS AND DOWNSTREAM IMPROVE-
  6           ID   MENTS WITH THE OUTLETS OF THESE BASINS
  7           ID
  8           ID   100YR-24HR EVENT
  9           ID
 10           ID   SUBBASIN RETENTION VOLUMES ARE BASED UPON THE 100 YEAR 2 HR STORM.THE AMOUNT
 11           ID   OF THIS ULTIMATE VOLUME WAS REDUCED TO ACCOUNT FOR THE PORTION OF EACH
 12           ID   SUBBASIN THAT IS ALREADY DEVELOPED AND DOES NOT HAVE RETENTION FOR THAT
 13           ID   DEVELOPMENT. THE AMOUNT WAS FURTHER LOWERED TO ACCOUNT FOR SOME OF THE RUNOFF
 14           ID   NOT GETTING INTO RETENTION BASINS
 15           ID
 16           ID   FILENAME IS PLANB.DAT
 17           ID
 18           ID   DDM MCUHP2 MESA AREA DRAINAGE MASTER PLAN
              *DIAGRAM
 19           IT       5  1APR97    0000    1000
 20           IO       5
 21           IN      15
              *
 22           JD    3.60    0.01
 23           PC    .000    .002    .005    .008    .011    .014    .017    .020    .023    .026
 24           PC    .029    .032    .035    .038    .041    .044    .048    .052    .056    .060
 25           PC    .064    .068    .072    .076    .080    .085    .090    .095    .100    .105
 26           PC    .110    .115    .120    .126    .135    .142    .150    .158    .166    .175
 27           PC    .184    .195    .208    .224    .243    .266    .318    .479    .678    .716
 28           PC    .743    .764    .781    .795    .808    .818    .828    .837    .844    .851
 29           PC    .858    .865    .871    .877    .883    .889    .895    .900    .905    .910
```

```
 30          PC    .915    .919    .923    .927    .931    .935    .939    .943    .947    .951
 31          PC    .954    .957    .960    .963    .966    .969    .972    .975    .978    .981
 32          PC    .984    .987    .990    .993    .996    .999   1.000
 33          JD    3.58       1
 34          JD    3.49       5
 35          JD    3.38    10.0
 36          JD    3.27    20.0
             * JD  3.24    30.0
             * JD  3.10    60.0
             * JD  3.05    90.0
             * DDM   ***** Updated *****

 37          KK      48
 38          KM   BASIN 48
 39          KM    THE FOLLOWING PARAMETERS WERE PROVIDED FOR THIS BASIN
 40          KM    L=      1.6  Lca=       .8   S=   80.2  Kn= .060  LAG=  41.6
 41          KM    PHOENIX VALLEY S-GRAPH WAS USED FOR THIS BASIN
 42          BA     .77
 43          LG     .27     .25    4.10     .54   22.00
 44          UI     62.     75.    223.    304.    360.    431.    532.    752.    705.    560.
 45          UI    472.    387.    317.    240.    141.    107.     90.     62.     45.     19.
 46          UI     19.     19.     19.     19.      0.      0.      0.      0.      0.      0.
 47          UI      0.      0.      0.      0.      0.      0.      0.      0.      0.      0.
             *
                                          HEC-1 INPUT                                          PAGE  2

LINE         ID.......1.......2.......3.......4.......5.......6.......7.......8.......9......10


 48          KK     D48
 49          KM    RETAIN 100 YEAR 2 HOUR, (48% FOR FUTURE DEVELOPMENT)
 50          DT     D48      28
 51          DI       0   10000
 52          DQ       0   10000
             *
             * DDM   ***** Preserved *****

 53          KK    CAP3
 54          RS       1    FLOW      -1
 55          SV       0   0.934   1.222   4.303   13.13
 56          SE  1564.6  1567.5    1568    1570    1572
 57          SQ       0       0     143     750    1530
             *
             * *******FOLLOWING ADDED FOR ADMP**************

 58          KK  BASIN3
             * KO     1       2
 59          KM        NEW DETENTION BASIN LOCATED DOWNSTREAM FROM CAP3
 60          KM        WITH 30-INCH OUTFALL    BASIN AE2B (BASIN 3)
 61          RS       1    STOR      -1
 62          SV       0       0       0     .85    3.27    6.44   10.21   14.45   31.29
 63          SE    1555    1556    1557    1558    1559    1560    1561    1562    1565
 64          SQ       0       6      18      24      30      36      42      48      54    67.5
 65          SQ     107     149     205     455
 66          SE  1555.0  1556.3  1557.1  1557.5  1557.9  1558.4  1559.0  1559.6  1560.4  1562.3
 67          SE  1562.8  1563.1  1563.3  1564.1
             *
             *  REACH C3-1
             *  520' FEET OF EXISTING CHANNEL NOT MODELED DUE TO SHORT ROUTING LENGTH
             *

 68          KK   RCAP3
 69          KM   REACH C3C-1
 70          KM   ROUTE BASIN 3 FLOW IN CONC. PIPE TO INTERSECTION OF ELLSWORTH & APACHE
 71          KM   THROUGH A 48-INCH PIPE
 72          RK    1500  0.0127   0.012            CIRC       4
             *
             * DDM   ***** Updated *****

 73          KK      49
 74          KM   BASIN 49
 75          KM    THE FOLLOWING PARAMETERS WERE PROVIDED FOR THIS BASIN
 76          KM    L=      1.6  Lca=       .8   S=   73.6  Kn= .060  LAG=  42.6
 77          KM    PHOENIX VALLEY S-GRAPH WAS USED FOR THIS BASIN
 78          BA     .79
 79          LG     .27     .25    4.15     .53   23.00
 80          UI     62.     68.    220.    296.    354.    420.    509.    709.    747.    583.
 81          UI    493.    406.    335.    271.    171.    110.    102.     66.     62.     21.
 82          UI     19.     19.     19.     19.     19.      0.      0.      0.      0.      0.
```

```
 83          UI      0.      0.      0.      0.      0.      0.      0.      0.      0.      0.
             *
                                          HEC-1 INPUT                                                PAGE  3

LINE         ID.......1.......2.......3.......4.......5.......6.......7.......8.......9......10

 84          KK     D49
 85          KM    RETAIN 100 YEAR 2 HOUR, (54% FOR FUTURE DEVELOPMENT)
 86          DT     D49      27
 87          DI       0   10000
 88          DQ       0   10000
             * DDM   ***** Preserved *****

 89          KK    CAP2
 90          RS       1    FLOW      -1
 91          SV       0    0.02   0.538   2.545  13.729
 92          SE  1565.1    1566    1568    1570    1572
 93          SQ       0      60     340     807    1395
             *
             * *******FOLLOWING ADDED FOR ADMP********

 94          KK  BASIN2
             * KO     1       2
 95          KM        NEW DETENTION BASIN LOCATED DOWNSTREAM FROM CAP2
 96          KM        WITH 30-INCH OUTFALL      (EH1B)
 97          RS       1    STOR
 98          SV       0     .05     .62    1.99    4.97   10.20   16.71   20.19   23.76
 99          SE    1550    1551    1552    1553    1554    1555    1556  1556.5    1557
100          SQ       0      10      20      30      40      50      58
101          SE    1549  1550.0  1550.0  1552.3  1553.4  1555.9  1558.1
             *

102          KK  RCAP2B
103          KM   REACH C2-1
104          KM   ROUTE RCAP2A THROUGH CONCRETE CHANNEL
105          KM    TO CAP BASIN 3 OUTLET CHANNEL (NEAR ELLSWORTH ROAD AND APACHE TRAIL)
106          RS       1    FLOW      -1
107          RC   0.025   0.015   0.025     850  0.0071
108          RX       0     1.5     5.5    11.6    15.6    21.8    24.8      27
109          RY     5.2     5.1     4.1       0       0     4.1     5.1     5.2
             *
             * DDM   ***** Updated *****

110          KK     17A
111          KM   BASIN 17A
112          KM    THE FOLLOWING PARAMETERS WERE PROVIDED FOR THIS BASIN
113          KM    L=       .7  Lca=       .5   S=   60.6  Kn= .084  LAG=  36.9
114          KM    PHOENIX VALLEY S-GRAPH WAS USED FOR THIS BASIN
115          BA     .18
116          LG     .23     .24    4.00     .56   43.00
117          UI     16.     28.     65.     86.    104.    130.    187.    189.    145.    119.
118          UI     95.     75.     47.     29.     25.     16.     11.      5.      5.      5.
119          UI      5.      5.      0.      0.      0.      0.      0.      0.      0.      0.
120          UI      0.      0.      0.      0.      0.      0.      0.      0.      0.      0.
             *
                                          HEC-1 INPUT                                                PAGE  4

LINE         ID.......1.......2.......3.......4.......5.......6.......7.......8.......9......10

121          KK    D17A
122          KM    RETAIN 100 YEAR 2 HOUR, (29% FOR FUTURE DEVELOPMENT)
123          DT    D17A       4
124          DI       0   10000
125          DQ       0   10000
             *

126          KK   C17A1
127          KM
128          HC       2
             *

129          KK   C17A2
130          KM
131          HC       2
             *

132          KK   AT23B
```

```
133          KM   REACH AE-4, AE-5
134          KM   PART 1 OF 2
135          KM   ROUTE FROM CONFLUENCE OF CAP BASIN 2 CHANNEL WITH CAP BASIN 3,
136          KM     WHICH IS 0.06 MILES NORTH OF APACHE TRAIL, TO APACHE TRAIL,
137          KM     ABOUT 0.1 MILES EAST OF ELLSWORTH ROAD
138          RS       1    FLOW      -1
139          RC    .025    .015    .025     570   .0021
140          RX       0      12      16      24      28      36      40      52
141          RY       5     4.9     3.9       0       0     3.9     4.9       5
             *

142          KK   AT23A
143          KM   REACH AE-1, AE-2, AE-3
144          KM   PART 2 OF 2
145          KM   ROUTE FROM 0.1 MILES EAST OF ELLSWORTH ROAD ON APACHE TRAIL TO
146          KM     BROADWAY ROAD 0.125 MILES WEST OF 90th STREET (OR 0.625 MILES
147          KM     WEST OF ELLSWORTH ROAD)
148          RS       1    FLOW      -1
149          RC   0.025   0.025   0.025    3820  0.0029
150          RX       0     2.9     6.9    22.5    37.5    51.5    57.1      60
151          RY       5     4.9     3.9       0       0     3.9     4.9       5
             *
             * DDM   ***** Updated *****

152          KK      23
153          KM   BASIN 23
154          KM    THE FOLLOWING PARAMETERS WERE PROVIDED FOR THIS BASIN
155          KM    L=      1.0  Lca=       .3   S=   65.0  Kn= .047  LAG=  20.1
156          KM    PHOENIX VALLEY S-GRAPH WAS USED FOR THIS BASIN
157          BA     .28
158          LG     .22     .25    4.00     .58   42.00
159          UI     55.    201.    304.    505.    440.    297.    180.     79.     48.     14.
160          UI     14.     14.      0.      0.      0.      0.      0.      0.      0.      0.
161          UI      0.      0.      0.      0.      0.      0.      0.      0.      0.      0.
             *
```



```
LINE         ID.......1.......2.......3.......4.......5.......6.......7.......8.......9......10

162          KK     D23
163          KM    RETAIN 100 YEAR 2 HOUR, (49% FOR FUTURE DEVELOPMENT)
164          DT     D23      10
165          DI       0   10000
166          DQ       0   10000
             *

167          KK    C23A
168          KM
169          HC       2
             *
             * DDM   ***** Updated *****

170          KK     17B
171          KM   BASIN 17B
172          KM    THE FOLLOWING PARAMETERS WERE PROVIDED FOR THIS BASIN
173          KM    L=       .8  Lca=       .6   S=   50.0  Kn= .073  LAG=  36.8
174          KM    PHOENIX VALLEY S-GRAPH WAS USED FOR THIS BASIN
175          BA     .22
176          LG     .19     .24    4.00     .56   55.00
177          UI     20.     35.     81.    107.    129.    162.    233.    232.    179.    146.
178          UI    117.     92.     57.     35.     30.     20.     13.      6.      6.      6.
179          UI      6.      0.      0.      0.      0.      0.      0.      0.      0.      0.
180          UI      0.      0.      0.      0.      0.      0.      0.      0.      0.      0.
             *

181          KK    D17B
182          KM    RETAIN 100 YEAR 2 HOUR, (27% FOR FUTURE DEVELOPMENT)
183          DT    D17B       5
184          DI       0   10000
185          DQ       0   10000
             *
             * DDM   ***** Preserved *****

186          KK  17BT22
187          KM   ROUTE FLOWS FROM S17 TO C22 VIA LINED CHANNEL
188          RS       3    FLOW      -1
189          RC   0.035   0.015   0.035    2700  0.0114
190          RX       0       1       3       6      18      21      36      70
```

```
 191          RY    6.25    6.10       6       0       0       3    3.25     3.5
              *
              * DDM   ***** Updated *****

 192          KK      47
 193          KM   BASIN 47
 194          KM    THE FOLLOWING PARAMETERS WERE PROVIDED FOR THIS BASIN
 195          KM    L=      3.0  Lca=      1.5   S=   51.2  Kn= .055  LAG=  66.7
 196          KM    PHOENIX VALLEY S-GRAPH WAS USED FOR THIS BASIN
 197          BA    1.67
 198          LG     .28     .25    4.00     .55   17.00
 199          UI     85.     85.     85.    265.    337.    402.    456.    500.    559.    633.
 200          UI    721.    921.   1086.    972.    828.    734.    667.    584.    519.    460.
 201          UI    404.    343.    250.    164.    148.    139.    126.     85.     85.     74.
 202          UI     26.     26.     26.     26.     26.     26.     26.     26.     26.      0.
                                          HEC-1 INPUT                                          PAGE  6

LINE          ID.......1.......2.......3.......4.......5.......6.......7.......8.......9......10

 203          UI      0.      0.      0.      0.      0.      0.      0.      0.      0.      0.
 204          UI      0.      0.      0.      0.      0.      0.      0.      0.      0.      0.
              *

 205          KK     D47
 206          KM    RETAIN 100 YEAR 2 HOUR, (69% FOR FUTURE DEVELOPMENT)
 207          DT     D47      68
 208          DI       0   10000
 209          DQ       0   10000
              *
              * ***************BELOW MODIFIED FOR ADMP*************************
              *

 210          KK  BASIN4
              * KO     1       2
 211          KM   ROUTE THROUGH OVERCHUTES 4 AND 5, HYDRAULICALLY CONNECTED
 212          KM   STORAGE AND DISCHARGE WERE ADDED AT APPROPRIATE ELEVATIONS
 213          KM   OUTFLOW THROUGH TWO 30-INCH PIPES.
 214          KM   BASIN4 (BY4B)
 215          RS       1    STOR      -1
 216          SV       0     .01    0.31    1.85    5.61   11.12   17.18   23.67
 217          SE    1568    1569    1570    1571    1572    1573    1574    1575
 218          SQ       0    12.5    37.5      50      53      75    87.5     100   112.5     125
 219          SQ     131
 220          SE  1567.8  1569.0  1570.0  1570.4  1570.5  1571.5  1572.2  1572.9  1573.7  1574.6
 221          SE    1575
              * NO DIVERSION THROUGH THE OLD CHANNEL FROM OVERCHUTE 5
              *

 222          KK  RCAP4A
 223          KM   REACH C4-4, C4-3, C4-2, + culverts C4C-2 & C4C-3 (CAP BASIN 4 OUTLET CHANNEL)
 224          KM   ROUTE CAP BASIN 4
 225          KM   ROUTE FLOW FROM BASIN 4 TO CULVERT CROSSING (C4C-1) @ 0.25 MILES SOUTH OF APA
 226          KM      TRAIL AND 0.25 MILES WEST OF CRISMON ROAD.
 227          RS       1    FLOW      -1
 228          RC   0.025   0.025   0.025    2210  0.0033
 229          RX       0      10      22      37      45      60      70      80
 230          RY       6       6     3.8       0       0     3.8       6       6
              *

 231          KK  RCAP4B
 232          KM   REACH C4-1 and C4-2 including Culvert C4C-1 (CAP BASIN 4 OUTLET CHANNEL)
 233          KM   ROUTE FLOW FROM CULVERT C4C-1 TO CONFLUENCE WITH BROADWAY CHANNEL AT 98th
 234          KM     STREET, ABOUT 0.3 MILES SOUTH OF APACHE TRAIL.
 235          RS       1    FLOW      -1
 236          RC   0.025   0.025   0.025     300  0.0020
 237          RX       0      10      22      37      45      60      70      80
 238          RY       6       6     3.8       0       0     3.8       6       6
              *
                                          HEC-1 INPUT                                          PAGE  7

LINE          ID.......1.......2.......3.......4.......5.......6.......7.......8.......9......10

 239          KK  RCAP4C
 240          KM   REACH BY-12 AND BY-13, including culverts BYC-12, BYC-11, and BYC-10.
 241          KM     (THIS ROUTING WITHIN THE BROADWAY CHANNEL.)
 242          KM    ROUTE FLOW FROM 98th STREET TO 0.25 MILES EAST OF ELLSWORTH ROAD.
 243          RS       1    FLOW      -1
 244          RC    .025    .025    .025    2790  0.0021
```

```
245          RX       0       4     9.6      28      48    66.4      72      76
246          RY       6       6     4.6       0       0     4.6       6       6
             *

247          KK  RCAP4D
248          KM   REACH BY-8, BY-9, BY-10, BY-11 plus culverts BYC-10, BYC-9, BYC-8, & BYC-7.
249          KM     (THIS ROUTING WITHIN THE BROADWAY CHANNEL.)
250          KM    ROUTE FLOW FROM 0.25 MILES EAST OF ELLSWORTH ROAD TO ELLSWORTH ROAD.
251          RS       1    FLOW      -1
252          RC    .025    .015    .025    1360  0.0018
253          RX       0       6    13.1    22.5      38    47.4      54      60
254          RY       6       6     4.7       0       0     4.7       6       6
             *
             * DDM   ***** Updated *****

255          KK      22
256          KM   BASIN 22
257          KM    THE FOLLOWING PARAMETERS WERE PROVIDED FOR THIS BASIN
258          KM    L=      1.2  Lca=       .3   S=   51.3  Kn= .048  LAG=  22.8
259          KM    PHOENIX VALLEY S-GRAPH WAS USED FOR THIS BASIN
260          BA     .41
261          LG     .22     .25    4.00     .57   52.00
262          UI     60.    229.    349.    509.    699.    491.    346.    212.    102.     65.
263          UI     26.     18.     18.      0.      0.      0.      0.      0.      0.      0.
264          UI      0.      0.      0.      0.      0.      0.      0.      0.      0.      0.
             *

265          KK     D22
266          KM    RETAIN 100 YEAR 2 HOUR, (33% FOR FUTURE DEVELOPMENT)
267          DT     D22      11
268          DI       0   10000
269          DQ       0   10000
             *
             * DDM   ***** Preserved *****

270          KK    C22A
271          KM   COMBINE FLOWS FROM CAP OVERCHUTES 4 & 5 AND SUBBASIN 22
272          HC       3
             *

273          KK   22T23
274          KM   REACH BY-6, BY-7 plus exist. culvert @ ELLSWORTH ROAD,
275          KM     and culvert BYC-5.
276          KM     (THIS ROUTING WITHIN THE BROADWAY CHANNEL.)
277          KM     ROUTE FLOW FROM ELLSWORTH ROAD (C22A) TO ABOUT 0.5 MILES WEST OF
278          KM     ELLSWORTH ROAD (C23B), WHICH IS AT THE APACHE CHANNEL.
279          RS       1    FLOW      -1
280          RC    .025    .015    .025    2140  0.0018
             *    This routing based on BY-7 bottom width, depth and slope.
```



```
LINE         ID.......1.......2.......3.......4.......5.......6.......7.......8.......9......10

281          RX       0       6    12.8    22.0      38    47.2      54      60
282          RY       6       6     4.6       0       0     4.6       6       6
             *
             * DDM   ***** Preserved *****

283          KK    C23B
284          KM   COMBINE FLOWS FROM C22, C17A, AND S23 AT C23
285          HC       2
             *

286          KK   23T24
287          KM   REACH BY-1, BY-2, BY-3, BY-4 AND BY-5, plus
288          KM     culverts BYC-1, BYC-2, BYC-3, BYC-4.
289          KM     (THIS ROUTING WITHIN THE BROADWAY CHANNEL.)
290          KM     ROUTE FLOW FROM APACHE CHANNEL ABOUT 0.5 MILES WEST OF ELLSWORTH
291          KM     ROAD (C23B) TO HAWES ROAD (C24).
292          RS       1    FLOW      -1
293          RC   0.025   0.015   0.025    3212  0.0017
294          RX       0       8    16.2      28      43    54.8      63      71
295          RY     5.9     6.0     5.9       0       0     5.9     6.0     5.9
             *
             * DDM   ***** Updated *****

296          KK      24
297          KM   BASIN 24
298          KM    THE FOLLOWING PARAMETERS WERE PROVIDED FOR THIS BASIN
```

```
299          KM    L=       .9  Lca=       .5   S=   43.5  Kn= .052  LAG=  27.2
300          KM    PHOENIX VALLEY S-GRAPH WAS USED FOR THIS BASIN
301          BA     .29
302          LG     .24     .25    4.00     .58   43.00
303          UI     36.    106.    186.    243.    353.    419.    301.    226.    164.     82.
304          UI     58.     36.     15.     11.     11.     11.      0.      0.      0.      0.
305          UI      0.      0.      0.      0.      0.      0.      0.      0.      0.      0.
             *
             .
306          KK     D24
307          KM    RETAIN 100 YEAR 2 HOUR, (8% FOR FUTURE DEVELOPMENT)
308          DT     D24       2
309          DI       0   10000
310          DQ       0   10000
             *

311          KK    C24A
312          KM    COMBINE FLOWS FROM SUBBASIN 24 WITH FLOW FROM BROADWAY CHANNEL, "23T24"
313          HC       2
             * DDM   ***** Updated *****
             *

314          KK      50
315          KM   BASIN 50
316          KM    THE FOLLOWING PARAMETERS WERE PROVIDED FOR THIS BASIN
317          KM    L=       .9  Lca=       .4   S=   81.4  Kn= .079  LAG=  33.8
318          KM    PHOENIX VALLEY S-GRAPH WAS USED FOR THIS BASIN
319          BA     .28
320          LG     .23     .24    4.00     .55   43.00
                                          HEC-1 INPUT                                                    PAGE  9

LINE         ID.......1.......2.......3.......4.......5.......6.......7.......8.......9......10

321          UI     27.     55.    118.    153.    190.    259.    335.    259.    208.    163.
322          UI    126.     76.     47.     37.     27.     11.      8.      8.      8.      8.
323          UI      0.      0.      0.      0.      0.      0.      0.      0.      0.      0.
324          UI      0.      0.      0.      0.      0.      0.      0.      0.      0.      0.
             *

325          KK     D50
326          KM    RETAIN 100 YEAR 2 HOUR, (64% FOR FUTURE DEVELOPMENT)
327          DT     D50      13
328          DI       0   10000
329          DQ       0   10000
             *
             * DDM   ***** Preserved *****

330          KK    CAP1
331          RS       1    FLOW      -1
332          SV       0   0.091   0.575   3.319  13.256
333          SE    1566    1568    1570    1572    1574
334          SQ       5      90     275     470     610
             *

335          KK  BASIN1
             * KO     1       2
336          KM        NEW DETENTION BASIN LOCATED DOWNSTREAM FROM CAP1
337          KM        WITH 24-INCH OUTFALL
338          RS       1    STOR      -1
339          SV       0       0     0.1    1.26     4.1    7.59    8.31
340          SE    1559    1560    1561    1562    1563    1564  1564.2
341          SQ       0       5      10      15      20      25      30      34      36
342          SQ      67     129     234
343          SE  1559.0  1560.1  1560.6  1561.1  1561.6  1562.3  1563.1  1563.9  1564.2
344          SE    1565  1565.5    1566
             *

345          KK   RBAS1
346          KM   ROUTE FLOWS FROM BASIN1 AT THE CAP TO SUBBASIN 18 (APACHE TRAIL AND HAWES RD)
347          KM    NO IMPROVED CHANNEL
348          RS      11    FLOW      -1
349          RC    0.05   0.045    0.05    7000    0.02
350          RX     100     200     300     301     303     304     404     504
351          RY       6       5       2       0       0       2       5       6
             *
             * DDM   ***** Updated *****

352          KK     18c
353          KM   BASIN 18c
```

```
 354          KM    THIS IS THE FUTURE SUBBASIN
 355          KM    THE FOLLOWING PARAMETERS WERE PROVIDED FOR THIS BASIN
 356          KM    L=      1.2  Lca=       .7   S=   66.1  Kn= .061  LAG=  37.2
 357          KM    PHOENIX VALLEY S-GRAPH WAS USED FOR THIS BASIN
 358          BA     .50
 359          LG     .22     .25    4.00     .57   44.00
 360          UI     45.     75.    180.    237.    287.    355.    507.    531.    407.    335.
 361          UI    268.    214.    140.     80.     72.     45.     34.     14.     14.     14.
 362          UI     14.     14.      0.      0.      0.      0.      0.      0.      0.      0.
                                          HEC-1 INPUT                                          PAGE 10

LINE          ID.......1.......2.......3.......4.......5.......6.......7.......8.......9......10

 363          UI      0.      0.      0.      0.      0.      0.      0.      0.      0.      0.
              *

 364          KK    D18c
 365          KM    RETAIN THE 100 YEAR 2 HOUR VOLUME (53% OF BASIN HAS RETENTION
 366          DT    D18c      20
 367          DI       0   10000
 368          DQ       0   10000
              *
              * DDM   ***** Preserved *****

 369          KK    C18C
 370          KM    COMBINE FLOWS FROM ROUTED FLOW OF SUBBASIN 50 WITH FLOW FROM 18c
 371          KM    BEFORE CROSSING UNDERNEATH APACHE BLVD AND GOING INTO THE HAWES CHANNEL
 372          HC       2
              *
              * DDM   ***** Preserved *****

 373          KK   18T24
 374          KM   REACH HS-6, HS-7, HS-8
 375          KM   ROUTE FLOWS FROM SUBBASIN 18A TO SUBBASIN 24.
 376          RS       1    FLOW      -1
 377          RC    .025    .015    .025    2730  0.0017
 378          RX       0       8      16      26      46      58      65      73
 379          RY     5.0     5.1     5.2       0       0     5.2     5.1     5.0
              *  THE ABOVE CHANNEL DIMS ARE BASED ON THE NARROWEST DESIGN REACH.
              *
              *
              * DDM   ***** Preserved *****

 380          KK     C24
 381          KM   COMBINE FLOWS FROM C23, S18A AND S24
 382          ZW     A=HAWES RD @ BROADWAY RD   B=HAWES CHANNEL PROJECT  C=FLOW   F=HYDROGRAPH
 383          HC       2
              *
              * DDM   ***** Preserved *****

 384          KK  BRDHAW
 385          KM    DIVERT FLOW OF 360 CFS TO THE WEST PER THE CITY OF MESA FUTURE DRAINAGE
 386          KM    SYSTEM
 387          DT  DIVBRD
 388          DI       0     200     400     500     700    1000
 389          DQ       0     200     360     360     360     360
              *

 390          KK  RT31B1
 391          KM   THIS ROUTING STEP HAS BEEN BROKEN OUT OF A LARGER SEQUENCE FOR SIMPLICITY
 392          KM   REACH HS-5 plus culvert HSC-4
 393          KM   ROUTE FLOWS FROM HAWES ROAD AND BROADWAY ROAD (C24) TO CORAL BELL AVENUE.
 394          KO                                      21                          10
 395          ZW   A=FLOW AFTER 360 CFS DIVERT TO WEST B=HAWES CHANNEL PROJECT C=FLOW  F=HYDRO
 396          RS       1    FLOW      -1
 397          RC    .025    .015    .025    1312  0.0015
 398          RX       0       8      15      28      68      81      89      97
 399          RY     6.2     6.4     6.5       0       0     6.5     6.4     6.2
              *
                                          HEC-1 INPUT                                          PAGE 11

LINE          ID.......1.......2.......3.......4.......5.......6.......7.......8.......9......10

 400          KK  RT31B2
 401          KM   THIS ROUTING STEP HAS BEEN BROKEN OUT OF A LARGER SEQUENCE FOR SIMPLICITY
 402          KM   REACH HS-4A AND HS4-B plus culvert HSC-3
 403          KM   ROUTE FLOWS FROM CORAL BELL AVENUE TO EMELITA AVENUE.
 404          RS       1    FLOW      -1
```

```
405          RC    .025    .015    .025    2080  0.0018
406          RX       0       8    15.9      16      66    66.1      74      82
407          RY     5.8     5.9     6.1       0       0     6.1     5.9     5.8
             *

408          KK  RT31B3
409          KM   THIS ROUTING STEP HAS BEEN BROKEN OUT OF A LARGER SEQUENCE FOR SIMPLICITY
410          KM   REACH HS-3
411          KM    THIS REACH IS AN EXISTING CHANNEL FOR THE CRESCENT RUN MOBILE HOME PARK.
412          KM    The existing channel 5.6 ft deep has no freeboard.  Overbank flows in street
413          KM    Routing values per channel design plans,
414          KM    Sheet 2 of 19, City of Mesa Project 97-69.
415          KM   ROUTE FLOWS FROM EMELITA AVENUE TO SOUTHERN AVENUE (C31) WITHIN SUBBASIN 31B.
416          RS       1    FLOW      -1
417          RC    .025    .015    .025    1935  0.0033
418          RX       0    35.6    41.6      50    66.7    75.1    81.1    92.0
419          RY     5.4     4.7     5.6       0       0     5.6     7.6     7.7
             *
             * DDM   ***** Updated *****
             *

420          KK     31B
421          KM   BASIN 31B
422          KM    THE FOLLOWING PARAMETERS WERE PROVIDED FOR THIS BASIN
423          KM    L=      1.2  Lca=       .5   S=   29.7  Kn= .049  LAG=  30.8
424          KM    PHOENIX VALLEY S-GRAPH WAS USED FOR THIS BASIN
425          BA     .47
426          LG     .24     .25    4.45     .46   37.00
427          UI     52.    125.    240.    309.    399.    601.    544.    416.    321.    243.
428          UI    141.     88.     63.     44.     16.     16.     16.     16.      0.      0.
429          UI      0.      0.      0.      0.      0.      0.      0.      0.      0.      0.
             *

430          KK    D31B
431          KM    RETAIN 100 YEAR 2 HOUR, (66% FOR FUTURE DEVELOPMENT)
432          DT    D31B      23
433          DI       0   10000
434          DQ       0   10000
             *
             * DDM   ***** Preserved *****

435          KK     C31
436          KM   COMBINE FLOWS FROM C24  WITH S31A AND S31B
437          ZW   A=FLOW SOUTHERN AND HAWES BEFORE SPLIT BOX B=HAWES CHANNEL PROJ C=FLOW F=HYDR
438          HC       2
             *
             * DDM   ***** Preserved *****
                                        HEC-1 INPUT                                          PAGE 12

LINE         ID.......1.......2.......3.......4.......5.......6.......7.......8.......9......10

439          KK    D31S
440          KM    THIS DIVERT RECORD IS FOR THE BOX CULVERT SYSTEM AT SOUTHERN AVE AND HAWES
441          KM    IT IS BASED UPON INLET CONTROL ANALYSIS OF THE FOLLOWING STRUCTURES:
442          KM    3-8'X4' CBC SOUTH,  2-10'X6' CBC TO THE WEST
443          KM    THE CULVERT TO THE SOUTH HAS TWO EXISTING CELLS WITH ONE ADDITIONAL CELL
444          KM    PLANNED.  THE CULVERT TO THE WEST IS PLANNED AND WILL HAVE ITS IVERT 2'
445          KM    BELOW THE EXISTING CILVERT
446          DT    D31S
             *  THESE NEW CARDS BASED UPON HEC-RAS ANALYSIS
447          DI       0     144     182     252     380     454     544     671     758     844
448          DI     976    1098    1184    1280    1412    1544    1646    1738    1830
449          DQ       0       0       0      32      64      96     144     211     238     264
450          DQ     336     408     444     480     552     624     666     708     750
             * DDM   ***** Preserved *****

451          KK  31WT32
452          KM   ROUTE FLOWS FROM D31A TO C32
453          RS    1.76    FLOW      -1
454          RC    .035    .022    .035    5280   .0027
455          RX       0    2005    2012    2012    2106    2106    2113    3122
456          RY     4.5     4.5     3.5       0       0     3.5     4.5     4.5
             *
             * DDM   ***** Updated *****

457          KK    D31S
458          KM   RETRIEVE DIVERTED HYDROGRAPH D31A
459          DR    D31S
```

```
                 *
460              KK  31T381  ROUTED IN TWO STEPS DUE TO CHANNEL DISSIMILARITY.
461              KM   REACH HS-2 plus culvert HSC-2
462              KM     ROUTE FLOWS FROM SOUTHERN AVENUE (C31) IN THE HAWES CHANNEL.
463              KM   REACH HS-2 IS A PROPOSED CHANNEL SOON-TO-BE-CONSTRUCTED.  IT IS 4.5 FEET
464              KM     DEEP, WITH FREEBOARD. CHANNEL CROSS-SECTION FROM DESIGN PLANS FOR
465              KM     SOUTHERN AVENUE DRAINAGE IMPROVEMENTS.  SHEET 28 OF 43
466              KM     CITY OF MESA PROJECT NO. 97-56.1 DESIGN PLANS BY ENTELLUS
467              KM     DATED 8/8/97 REV. 12/19/97
468              RS       1    FLOW      -1
469              RC   0.025   0.015   0.025    1248   .0022
470              RX       0      32      37      46      56      65      73      75
471              RY       5     7.0     4.5       0       0     4.5     9.0     9.5
                 *

472              KK  31T382
473              KM   REACH HS-1 plus culvert HSC-1
474              KM     ROUTE FLOWS TO SUPERSTITION FREEWAY (C38)
475              KM     IN THE HAWES CHANNEL.
476              RS       1    FLOW      -1
477              RC   0.025   0.015   0.025     810   .0017
478              RX       0      10      16      26      51      61      77      81
479              RY     5.3     4.8     4.9       0       0     4.9     4.6     3.6
                 *
480              ZZ
```

SCHEMATIC DIAGRAM OF STREAM NETWORK

```
PUT
INE      (V) ROUTING          (--->) DIVERSION OR PUMP FLOW

NO.      (.) CONNECTOR        (<---) RETURN OF DIVERTED OR PUMPED FLOW

 37          48
             .
             .
 50          .------->     D48
 48        D48
             V
             V
 53       CAP3
             V
             V
 58     BASIN3
             V
             V
 68      RCAP3
             .
             .
 73          .          49
             .           .
             .           .
 86          .           .------->     D49
 84          .         D49
             .           V
             .           V
 89          .        CAP2
             .           V
             .           V
 94          .      BASIN2
             .           V
             .           V
102          .      RCAP2B
             .           .
             .           .
110          .           .         17A
             .           .           .
             .           .           .
123          .           .           .------->    D17A
121          .           .        D17A
             .           .           .
             .           .           .
126          .       C17A1............
             .           .
             .           .
129      C17A2............
             V
             V
132      AT23B
```

```
                V
                V
142        AT23A
                .
                .
152             .          23
                .           .
                .           .
164             .         .-------->     D23
162             .        D23
                .           .
                .           .
167         C23A............
                .
                .
170             .         17B
                .           .
                .           .
183             .           .-------->    D17B
181             .       D17B
                .          V
                .          V
186             .     17BT22
                .           .
                .           .
192             .           .          47
                .           .           .
                .           .           .
207             .           .           .-------->     D47
205             .           .         D47
                .           .           V
                .           .           V
210             .           .      BASIN4
                .           .           V
                .           .           V
222             .           .      RCAP4A
                .           .           V
                .           .           V
231             .           .      RCAP4B
                .           .           V
                .           .           V
239             .           .      RCAP4C
                .           .           V
                .           .           V
247             .           .      RCAP4D
                .           .           .
                .           .           .
255             .           .           .          22
                .           .           .           .
                .           .           .           .
267             .           .           .           .-------->     D22
265             .           .           .         D22
                .           .           .           .
                .           .           .           .
270             .       C22A........................
                .          V
                .          V
273             .      22T23
                .           .
                .           .
283         C23B............
                V
                V
286        23T24
                .
                .
296             .          24
                .           .
                .           .
308             .           .-------->     D24
306             .         D24
                .           .
                .           .
311         C24A............
                .
                .
314             .          50
                .           .
                .           .
```

```
327          .           .------->     D50
325          .         D50
             .           V
             .           V
330          .        CAP1
             .           V
             .           V
335          .      BASIN1
             .           V
             .           V
345          .       RBAS1
             .           .
             .           .
352          .           .         18c
             .           .           .
             .           .           .
366          .           .           .------->    D18c
364          .           .        D18c
             .           .           .
             .           .           .
369          .        C18C............
             .           V
             .           V
373          .       18T24
             .           .
             .           .
380        C24............
             .
             .
387          .------->  DIVBRD
384     BRDHAW
             V
             V
390     RT31B1
             V
             V
400     RT31B2
             V
             V
408     RT31B3
             .
             .
420          .         31B
             .           .
             .           .
432          .           .------->    D31B
430          .        D31B
             .           .
             .           .
435        C31............
             .
             .
446          .------->    D31S
439       D31S
             V
             V
451     31WT32
             .
             .
459          .           .<-------    D31S
457          .        D31S
             .           V
             .           V
460          .      31T381
             .           V
             .           V
472          .      31T382
```

**) RUNOFF ALSO COMPUTED AT THIS LOCATION
****
****

```
                                    *                                                    *

  FLOOD HYDROGRAPH PACKAGE  (HEC-1)  *                                                    *    U.S. ARMY CORPS OF
INEERS     *
             JUL   1997             *                                                    *    HYDROLOGIC ENGINEERING
TER    *
          VERSION 4.1               *                                                    *          609 SECOND STREET
```

```
                                        *                                                  *       DAVIS, CALIFORNIA 9561

 RUN DATE   25AUG99  TIME  10:58:39     *                                                  *           (916) 756-1104

                                        *                                                  *

****************************************
*************************************
```

ORIGINAL MODEL FROM THE EAST MESA ADMP
LANDUSE IS OF THE FUTURE CONDITION
SOME ROUTINGS WERE TAKEN FROM THE DIBBLE MODEL(NDIF.DAT) AS PROVIDED FOR THE DRAINAGE IMPROVEMENTS ASSOCIATED WITH THE CAP BASINS AND DOWNSTREAM IMPROVEMENTS WITH THE OUTLETS OF THESE BASINS

100YR-24HR EVENT

SUBBASIN RETENTION VOLUMES ARE BASED UPON THE 100 YEAR 2 HR STORM.THE AMOUNT OF THIS ULTIMATE VOLUME WAS REDUCED TO ACCOUNT FOR THE PORTION OF EACH SUBBASIN THAT IS ALREADY DEVELOPED AND DOES NOT HAVE RETENTION FOR THAT DEVELOPMENT. THE AMOUNT WAS FURTHER LOWERED TO ACCOUNT FOR SOME OF THE RUNOFF NOT GETTING INTO RETENTION BASINS

FILENAME IS PLANB.DAT

DDM MCUHP2 MESA AREA DRAINAGE MASTER PLAN

```
20 IO          OUTPUT CONTROL VARIABLES
                     IPRNT           5  PRINT CONTROL
                     IPLOT           0  PLOT CONTROL
                     QSCAL          0.  HYDROGRAPH PLOT SCALE

   IT          HYDROGRAPH TIME DATA
                      NMIN           5  MINUTES IN COMPUTATION INTERVAL
                     IDATE      1APR97  STARTING DATE
                     ITIME        0000  STARTING TIME
                        NQ        1000  NUMBER OF HYDROGRAPH ORDINATES
                    NDDATE      4APR97  ENDING DATE
                    NDTIME        1115  ENDING TIME
                     ICENT          19  CENTURY MARK

               COMPUTATION INTERVAL     .08 HOURS
                    TOTAL TIME BASE   83.25 HOURS

        ENGLISH UNITS
             DRAINAGE AREA          SQUARE MILES
             PRECIPITATION DEPTH    INCHES
             LENGTH, ELEVATION      FEET
             FLOW                   CUBIC FEET PER SECOND
             STORAGE VOLUME         ACRE-FEET
             SURFACE AREA           ACRES
             TEMPERATURE            DEGREES FAHRENHEIT

22 JD          INDEX STORM NO. 1
                      STRM        3.60  PRECIPITATION DEPTH
                      TRDA         .01  TRANSPOSITION DRAINAGE AREA

23 PI            PRECIPITATION PATTERN
                    .00       .00       .00       .00       .00       .00       .00       .00       .00       .00
                    .00       .00       .00       .00       .00       .00       .00       .00       .00       .00
                    .00       .00       .00       .00       .00       .00       .00       .00       .00       .00
                    .00       .00       .00       .00       .00       .00       .00       .00       .00       .00
                    .00       .00       .00       .00       .00       .00       .00       .00       .00       .00
                    .00       .00       .00       .00       .00       .00       .00       .00       .00       .00
                    .00       .00       .00       .00       .00       .00       .00       .00       .00       .00
                    .00       .00       .00       .00       .00       .00       .00       .00       .00       .00
                    .00       .00       .00       .00       .00       .00       .00       .00       .00       .00
                    .00       .00       .00       .00       .00       .00       .00       .00       .00       .00
                    .00       .00       .00       .00       .00       .00       .00       .00       .00       .00
                    .00       .00       .00       .00       .00       .00       .00       .00       .00       .00
                    .00       .00       .00       .00       .00       .00       .01       .01       .01       .01
                    .01       .01       .01       .01       .01       .02       .02       .02       .05       .05
                    .05       .07       .07       .07       .01       .01       .01       .01       .01       .01
                    .01       .01       .01       .01       .01       .01       .00       .00       .00       .00
```

.00	.00	.00	.00	.00	.00	.00	.00	.00	.00
.00	.00	.00	.00	.00	.00	.00	.00	.00	.00
.00	.00	.00	.00	.00	.00	.00	.00	.00	.00
.00	.00	.00	.00	.00	.00	.00	.00	.00	.00
.00	.00	.00	.00	.00	.00	.00	.00	.00	.00
.00	.00	.00	.00	.00	.00	.00	.00	.00	.00
.00	.00	.00	.00	.00	.00	.00	.00	.00	.00
.00	.00	.00	.00	.00	.00	.00	.00	.00	.00
.00	.00	.00	.00	.00	.00	.00	.00	.00	.00
.00	.00	.00	.00	.00	.00	.00	.00	.00	.00
.00	.00	.00	.00	.00	.00	.00	.00	.00	.00
.00	.00	.00	.00	.00	.00	.00	.00	.00	.00
.00	.00	.00	.00	.00	.00	.00	.00		

33 JD INDEX STORM NO. 2

STRM 3.58 PRECIPITATION DEPTH

TRDA 1.00 TRANSPOSITION DRAINAGE AREA

0 PI PRECIPITATION PATTERN

.00	.00	.00	.00	.00	.00	.00	.00	.00	.00
.00	.00	.00	.00	.00	.00	.00	.00	.00	.00
.00	.00	.00	.00	.00	.00	.00	.00	.00	.00
.00	.00	.00	.00	.00	.00	.00	.00	.00	.00
.00	.00	.00	.00	.00	.00	.00	.00	.00	.00
.00	.00	.00	.00	.00	.00	.00	.00	.00	.00
.00	.00	.00	.00	.00	.00	.00	.00	.00	.00
.00	.00	.00	.00	.00	.00	.00	.00	.00	.00
.00	.00	.00	.00	.00	.00	.00	.00	.00	.00
.00	.00	.00	.00	.00	.00	.00	.00	.00	.00
.00	.00	.00	.00	.00	.00	.00	.00	.00	.00
.00	.00	.00	.00	.00	.00	.00	.00	.00	.00
.00	.00	.00	.00	.00	.00	.01	.01	.01	.01
.01	.01	.01	.01	.01	.02	.02	.02	.05	.05
.05	.07	.07	.07	.01	.01	.01	.01	.01	.01
.01	.01	.01	.01	.01	.01	.00	.00	.00	.00
.00	.00	.00	.00	.00	.00	.00	.00	.00	.00
.00	.00	.00	.00	.00	.00	.00	.00	.00	.00
.00	.00	.00	.00	.00	.00	.00	.00	.00	.00
.00	.00	.00	.00	.00	.00	.00	.00	.00	.00
.00	.00	.00	.00	.00	.00	.00	.00	.00	.00
.00	.00	.00	.00	.00	.00	.00	.00	.00	.00
.00	.00	.00	.00	.00	.00	.00	.00	.00	.00
.00	.00	.00	.00	.00	.00	.00	.00	.00	.00
.00	.00	.00	.00	.00	.00	.00	.00	.00	.00
.00	.00	.00	.00	.00	.00	.00	.00	.00	.00
.00	.00	.00	.00	.00	.00	.00	.00	.00	.00
.00	.00	.00	.00	.00	.00	.00	.00	.00	.00
.00	.00	.00	.00	.00	.00	.00	.00	.00	.00
.00	.00	.00	.00	.00	.00	.00	.00	.00	.00
.00	.00	.00	.00	.00	.00	.00	.00		

34 JD INDEX STORM NO. 3

STRM 3.49 PRECIPITATION DEPTH

TRDA 5.00 TRANSPOSITION DRAINAGE AREA

0 PI PRECIPITATION PATTERN

.00	.00	.00	.00	.00	.00	.00	.00	.00	.00
.00	.00	.00	.00	.00	.00	.00	.00	.00	.00
.00	.00	.00	.00	.00	.00	.00	.00	.00	.00
.00	.00	.00	.00	.00	.00	.00	.00	.00	.00
.00	.00	.00	.00	.00	.00	.00	.00	.00	.00
.00	.00	.00	.00	.00	.00	.00	.00	.00	.00
.00	.00	.00	.00	.00	.00	.00	.00	.00	.00
.00	.00	.00	.00	.00	.00	.00	.00	.00	.00
.00	.00	.00	.00	.00	.00	.00	.00	.00	.00
.00	.00	.00	.00	.00	.00	.00	.00	.00	.00
.00	.00	.00	.00	.00	.00	.00	.00	.00	.00
.00	.00	.00	.00	.00	.00	.00	.00	.00	.00
.00	.00	.00	.00	.00	.00	.01	.01	.01	.01
.01	.01	.01	.01	.01	.02	.02	.02	.05	.05
.05	.07	.07	.07	.01	.01	.01	.01	.01	.01
.01	.01	.01	.01	.01	.01	.00	.00	.00	.00
.00	.00	.00	.00	.00	.00	.00	.00	.00	.00
.00	.00	.00	.00	.00	.00	.00	.00	.00	.00
.00	.00	.00	.00	.00	.00	.00	.00	.00	.00
.00	.00	.00	.00	.00	.00	.00	.00	.00	.00
.00	.00	.00	.00	.00	.00	.00	.00	.00	.00
.00	.00	.00	.00	.00	.00	.00	.00	.00	.00
.00	.00	.00	.00	.00	.00	.00	.00	.00	.00
.00	.00	.00	.00	.00	.00	.00	.00	.00	.00
.00	.00	.00	.00	.00	.00	.00	.00	.00	.00
.00	.00	.00	.00	.00	.00	.00	.00	.00	.00
.00	.00	.00	.00	.00	.00	.00	.00	.00	.00
.00	.00	.00	.00	.00	.00	.00	.00	.00	.00

```
                .00       .00       .00       .00       .00       .00       .00       .00       .00       .00
                .00       .00       .00       .00       .00       .00       .00       .00       .00       .00
                .00       .00       .00       .00       .00       .00       .00       .00       .00       .00
                .00       .00       .00       .00       .00       .00       .00       .00

35 JD          INDEX STORM NO. 4
                 STRM        3.38  PRECIPITATION DEPTH
                 TRDA       10.00  TRANSPOSITION DRAINAGE AREA

 0 PI            PRECIPITATION PATTERN
                .00       .00       .00       .00       .00       .00       .00       .00       .00       .00
                .00       .00       .00       .00       .00       .00       .00       .00       .00       .00
                .00       .00       .00       .00       .00       .00       .00       .00       .00       .00
                .00       .00       .00       .00       .00       .00       .00       .00       .00       .00
                .00       .00       .00       .00       .00       .00       .00       .00       .00       .00
                .00       .00       .00       .00       .00       .00       .00       .00       .00       .00
                .00       .00       .00       .00       .00       .00       .00       .00       .00       .00
                .00       .00       .00       .00       .00       .00       .00       .00       .00       .00
                .00       .00       .00       .00       .00       .00       .00       .00       .00       .00
                .00       .00       .00       .00       .00       .00       .00       .00       .00       .00
                .00       .00       .00       .00       .00       .00       .00       .00       .00       .00
                .00       .00       .00       .00       .00       .00       .00       .00       .00       .00
                .00       .00       .00       .00       .00       .00       .01       .01       .01       .01
                .01       .01       .01       .01       .01       .02       .02       .02       .05       .05
                .05       .07       .07       .07       .01       .01       .01       .01       .01       .01
                .01       .01       .01       .01       .01       .01       .00       .00       .00       .00
                .00       .00       .00       .00       .00       .00       .00       .00       .00       .00
                .00       .00       .00       .00       .00       .00       .00       .00       .00       .00
                .00       .00       .00       .00       .00       .00       .00       .00       .00       .00
                .00       .00       .00       .00       .00       .00       .00       .00       .00       .00
                .00       .00       .00       .00       .00       .00       .00       .00       .00       .00
                .00       .00       .00       .00       .00       .00       .00       .00       .00       .00
                .00       .00       .00       .00       .00       .00       .00       .00       .00       .00
                .00       .00       .00       .00       .00       .00       .00       .00       .00       .00
                .00       .00       .00       .00       .00       .00       .00       .00       .00       .00
                .00       .00       .00       .00       .00       .00       .00       .00       .00       .00
                .00       .00       .00       .00       .00       .00       .00       .00       .00       .00
                .00       .00       .00       .00       .00       .00       .00       .00       .00       .00
                .00       .00       .00       .00       .00       .00       .00       .00

36 JD          INDEX STORM NO. 5
                 STRM        3.27  PRECIPITATION DEPTH
                 TRDA       20.00  TRANSPOSITION DRAINAGE AREA

 0 PI            PRECIPITATION PATTERN
                .00       .00       .00       .00       .00       .00       .00       .00       .00       .00
                .00       .00       .00       .00       .00       .00       .00       .00       .00       .00
                .00       .00       .00       .00       .00       .00       .00       .00       .00       .00
                .00       .00       .00       .00       .00       .00       .00       .00       .00       .00
                .00       .00       .00       .00       .00       .00       .00       .00       .00       .00
                .00       .00       .00       .00       .00       .00       .00       .00       .00       .00
                .00       .00       .00       .00       .00       .00       .00       .00       .00       .00
                .00       .00       .00       .00       .00       .00       .00       .00       .00       .00
                .00       .00       .00       .00       .00       .00       .00       .00       .00       .00
                .00       .00       .00       .00       .00       .00       .00       .00       .00       .00
                .00       .00       .00       .00       .00       .00       .00       .00       .00       .00
                .00       .00       .00       .00       .00       .00       .00       .00       .00       .00
                .00       .00       .00       .00       .00       .00       .01       .01       .01       .01
                .01       .01       .01       .01       .01       .02       .02       .02       .05       .05
                .05       .07       .07       .07       .01       .01       .01       .01       .01       .01
                .01       .01       .01       .01       .01       .01       .00       .00       .00       .00
                .00       .00       .00       .00       .00       .00       .00       .00       .00       .00
                .00       .00       .00       .00       .00       .00       .00       .00       .00       .00
                .00       .00       .00       .00       .00       .00       .00       .00       .00       .00
                .00       .00       .00       .00       .00       .00       .00       .00       .00       .00
                .00       .00       .00       .00       .00       .00       .00       .00       .00       .00
                .00       .00       .00       .00       .00       .00       .00       .00       .00       .00
                .00       .00       .00       .00       .00       .00       .00       .00       .00       .00
                .00       .00       .00       .00       .00       .00       .00       .00       .00       .00
                .00       .00       .00       .00       .00       .00       .00       .00       .00       .00
                .00       .00       .00       .00       .00       .00       .00       .00       .00       .00
                .00       .00       .00       .00       .00       .00       .00       .00       .00       .00
                .00       .00       .00       .00       .00       .00       .00       .00       .00       .00
                .00       .00       .00       .00       .00       .00       .00       .00

 -----DSS---ZOPEN:  Existing File Opened,  File: PLANB.DSS
                    Unit:  71;  DSS Version: 6-JG
---DSS---ZWRITE Unit  71; Vers.    3:  /HAWES RD @ BROADWAY RD/HAWES CHANNEL PROJECT/FLOW/31MAR1997/5MIN/HYDROGRAPH/
---DSS---ZWRITE Unit  71; Vers.    3:  /HAWES RD @ BROADWAY RD/HAWES CHANNEL PROJECT/FLOW/01APR1997/5MIN/HYDROGRAPH/
---DSS---ZWRITE Unit  71; Vers.    3:  /HAWES RD @ BROADWAY RD/HAWES CHANNEL PROJECT/FLOW/02APR1997/5MIN/HYDROGRAPH/
```

```
---DSS---ZWRITE Unit  71; Vers.    3:  /HAWES RD @ BROADWAY RD/HAWES CHANNEL PROJECT/FLOW/03APR1997/5MIN/HYDROGRAPH/
---DSS---ZWRITE Unit  71; Vers.    3:  /HAWES RD @ BROADWAY RD/HAWES CHANNEL PROJECT/FLOW/04APR1997/5MIN/HYDROGRAPH/


* *** *** *** *** *** *** *** *** *** *** *** *** *** *** *** *** *** *** *** *** *** *** *** *** *** *** *** *** *** *** **
 ***

          **************
          *            *
 90 KK    *    RT31B1  *
          *            *
          **************

 94 KO          OUTPUT CONTROL VARIABLES
                      IPRNT           5  PRINT CONTROL
                      IPLOT           0  PLOT CONTROL
                      QSCAL          0.  HYDROGRAPH PLOT SCALE
                      IPNCH           0  PUNCH COMPUTED HYDROGRAPH
                       IOUT          21  SAVE HYDROGRAPH ON THIS UNIT
                      ISAV1           1  FIRST ORDINATE PUNCHED OR SAVED
                      ISAV2        1000  LAST ORDINATE PUNCHED OR SAVED
                     TIMINT       1.000  TIME INTERVAL IN HOURS

---DSS---ZWRITE Unit  71; Vers.    3:  /FLOW AFTER 360 CFS DIVERT TO WES/HAWES CHANNEL PROJECT/FLOW/31MAR1997/5MIN/HYD/
---DSS---ZWRITE Unit  71; Vers.    3:  /FLOW AFTER 360 CFS DIVERT TO WES/HAWES CHANNEL PROJECT/FLOW/01APR1997/5MIN/HYD/
---DSS---ZWRITE Unit  71; Vers.    3:  /FLOW AFTER 360 CFS DIVERT TO WES/HAWES CHANNEL PROJECT/FLOW/02APR1997/5MIN/HYD/
---DSS---ZWRITE Unit  71; Vers.    3:  /FLOW AFTER 360 CFS DIVERT TO WES/HAWES CHANNEL PROJECT/FLOW/03APR1997/5MIN/HYD/
---DSS---ZWRITE Unit  71; Vers.    3:  /FLOW AFTER 360 CFS DIVERT TO WES/HAWES CHANNEL PROJECT/FLOW/04APR1997/5MIN/HYD/
---DSS---ZWRITE Unit  71; Vers.    3:  /FLOW SOUTHERN AND HAWES BEFORE S/HAWES CHANNEL PROJ/FLOW/31MAR1997/5MIN/HYDR/
---DSS---ZWRITE Unit  71; Vers.    3:  /FLOW SOUTHERN AND HAWES BEFORE S/HAWES CHANNEL PROJ/FLOW/01APR1997/5MIN/HYDR/
---DSS---ZWRITE Unit  71; Vers.    3:  /FLOW SOUTHERN AND HAWES BEFORE S/HAWES CHANNEL PROJ/FLOW/02APR1997/5MIN/HYDR/
---DSS---ZWRITE Unit  71; Vers.    3:  /FLOW SOUTHERN AND HAWES BEFORE S/HAWES CHANNEL PROJ/FLOW/03APR1997/5MIN/HYDR/
---DSS---ZWRITE Unit  71; Vers.    3:  /FLOW SOUTHERN AND HAWES BEFORE S/HAWES CHANNEL PROJ/FLOW/04APR1997/5MIN/HYDR/
```

RUNOFF SUMMARY
FLOW IN CUBIC FEET PER SECOND
TIME IN HOURS, AREA IN SQUARE MILES

OPERATION	STATION	PEAK FLOW	TIME OF PEAK	AVERAGE FLOW FOR MAXIMUM PERIOD 6-HOUR	24-HOUR	72-HOUR	BASIN AREA	MAXIMUM STAGE	TIME OF MAX GE
HYDROGRAPH AT	48	543.	12.50	96.	29.	10.	.77		
DIVERSION TO	D48	535.	12.42	51.	14.	5.	.77		
HYDROGRAPH AT	D48	520.	12.58	53.	15.	5.	.77		
ROUTED TO	CAP3	476.	12.67	53.	15.	5.	.77		
ROUTED TO	BASIN3	67.	13.42	52.	15.	5.	.77		
ROUTED TO	RCAP3	67.	13.42	52.	15.	5.	.77		
HYDROGRAPH AT	49	555.	12.50	100.	30.	10.	.79		
DIVERSION TO	D49	505.	12.33	49.	14.	5.	.79		
HYDROGRAPH AT	D49	555.	12.50	60.	17.	6.	.79		
ROUTED TO	CAP2	530.	12.58	60.	17.	6.	.79		
ROUTED TO	BASIN2	52.	13.58	48.	17.	6.	.79		
ROUTED TO									

RCAP2B	52.	13.58	48.	17.	6.	.79
HYDROGRAPH AT						
17A	158.	12.42	30.	10.	3.	.18
DIVERSION TO						
D17A	26.	11.75	6.	2.	1.	.18
HYDROGRAPH AT						
D17A	158.	12.42	28.	8.	3.	.18
2 COMBINED AT						
C17A1	186.	12.50	71.	24.	8.	.97
2 COMBINED AT						
C17A2	206.	12.58	118.	38.	13.	1.74
ROUTED TO						
AT23B	207.	12.58	118.	38.	13.	1.74
ROUTED TO						
AT23A	181.	12.75	117.	38.	13.	1.74
HYDROGRAPH AT						
23	322.	12.08	45.	15.	5.	.28
DIVERSION TO						
D23	187.	11.92	17.	5.	2.	.28
HYDROGRAPH AT						
D23	322.	12.08	34.	9.	3.	.28
2 COMBINED AT						
C23A	368.	12.17	147.	47.	16.	2.02
HYDROGRAPH AT						
17B	211.	12.42	42.	14.	5.	.22
DIVERSION TO						
D17B	17.	11.17	7.	3.	1.	.22
HYDROGRAPH AT						
D17B	211.	12.42	40.	11.	4.	.22
ROUTED TO						
17BT22	210.	12.42	40.	11.	4.	.22
HYDROGRAPH AT						
47	802.	12.92	189.	55.	18.	1.67
DIVERSION TO						
D47	802.	12.92	128.	34.	11.	1.67
HYDROGRAPH AT						
D47	546.	13.25	75.	21.	7.	1.67
ROUTED TO						
BASIN4	119.	14.08	75.	21.	7.	1.67
ROUTED TO						
RCAP4A	118.	14.25	75.	21.	7.	1.67
ROUTED TO						
RCAP4B	118.	14.25	75.	21.	7.	1.67
ROUTED TO						
RCAP4C	117.	14.50	74.	21.	7.	1.67
ROUTED TO						
RCAP4D	117.	14.58	74.	21.	7.	1.67
HYDROGRAPH AT						
22	477.	12.17	73.	24.	8.	.41
DIVERSION TO						
D22	71.	11.58	17.	6.	2.	.41
HYDROGRAPH AT						
D22	477.	12.17	67.	19.	6.	.41

3 COMBINED AT						
C22A	629.	12.25	169.	50.	17.	2.30
ROUTED TO						
22T23	624.	12.25	168.	50.	17.	2.30
2 COMBINED AT						
C23B	970.	12.25	306.	94.	32.	4.32
ROUTED TO						
23T24	930.	12.33	305.	94.	32.	4.32
HYDROGRAPH AT						
24	299.	12.25	48.	15.	5.	.29
DIVERSION TO						
D24	5.	6.58	4.	1.	0.	.29
HYDROGRAPH AT						
D24	299.	12.25	48.	14.	5.	.29
2 COMBINED AT						
C24A	1202.	12.33	344.	108.	36.	4.61
HYDROGRAPH AT						
50	255.	12.33	45.	15.	5.	.28
DIVERSION TO						
D50	227.	12.17	23.	7.	2.	.28
HYDROGRAPH AT						
D50	255.	12.33	29.	8.	3.	.28
ROUTED TO						
CAP1	262.	12.42	29.	11.	7.	.28
ROUTED TO						
BASIN1	35.	13.17	28.	11.	7.	.28
ROUTED TO						
RBAS1	35.	13.92	28.	11.	7.	.28
HYDROGRAPH AT						
18c	438.	12.42	83.	27.	9.	.50
DIVERSION TO						
D18c	367.	12.17	34.	10.	3.	.50
HYDROGRAPH AT						
D18c	438.	12.42	60.	17.	6.	.50
2 COMBINED AT						
C18C	443.	12.42	88.	28.	13.	.78
ROUTED TO						
18T24	417.	12.50	86.	28.	13.	.78
2 COMBINED AT						
C24	1435.	12.42	421.	133.	48.	5.39
DIVERSION TO						
DIVBRD	360.	12.00	288.	100.	37.	5.39
HYDROGRAPH AT						
BRDHAW	1075.	12.42	133.	33.	11.	5.39
ROUTED TO						
RT31B1	1065.	12.42	133.	33.	11.	5.39
ROUTED TO						
RT31B2	1039.	12.50	133.	33.	11.	5.39
ROUTED TO						
RT31B3	1031.	12.50	133.	33.	11.	5.39
HYDROGRAPH AT						
31B	455.	12.33	74.	23.	8.	.47

DIVERSION TO							
	D31B	449.	12.25	41.	12.	4.	.47
HYDROGRAPH AT							
	D31B	453.	12.33	42.	12.	4.	.47
2 COMBINED AT							
	C31	1347.	12.50	170.	44.	15.	5.86
DIVERSION TO							
	D31S	518.	12.50	45.	11.	4.	5.86
HYDROGRAPH AT							
	D31S	830.	12.50	125.	33.	11.	5.86
ROUTED TO							
	31WT32	604.	12.75	122.	33.	11.	5.86
HYDROGRAPH AT							
	D31S	518.	12.50	45.	11.	4.	5.86
ROUTED TO							
	31T381	524.	12.50	45.	11.	4.	5.86
ROUTED TO							
	31T382	524.	12.50	45.	11.	4.	5.86

SUMMARY OF KINEMATIC WAVE - MUSKINGUM-CUNGE ROUTING
(FLOW IS DIRECT RUNOFF WITHOUT BASE FLOW)

ISTAQ	ELEMENT	DT (MIN)	PEAK (CFS)	TIME TO PEAK (MIN)	VOLUME (IN)	INTERPOLATED TO COMPUTATION INTERVAL DT (MIN)	PEAK (CFS)	TIME TO PEAK (MIN)	VOLUME (IN)
FOR STORM = 1 STORM AREA (SQ MI) = .01									
RCAP3	MANE	.57	68.82	805.85	.72	5.00	68.78	805.00	.72

NTINUITY SUMMARY (AC-FT) - INFLOW= .2948E+02 EXCESS= .0000E+00 OUTFLOW= .2948E+02 BASIN STORAGE= .7073E-13 PERCENT ERROR

FOR STORM = 2 STORM AREA (SQ MI) = 1.00									
RCAP3	MANE	.49	67.18	806.03	.71	5.00	67.17	805.00	.71

NTINUITY SUMMARY (AC-FT) - INFLOW= .2902E+02 EXCESS= .0000E+00 OUTFLOW= .2901E+02 BASIN STORAGE= .6993E-13 PERCENT ERROR

FOR STORM = 3 STORM AREA (SQ MI) = 5.00									
RCAP3	MANE	.48	65.08	805.95	.66	5.00	65.07	805.00	.66

NTINUITY SUMMARY (AC-FT) - INFLOW= .2697E+02 EXCESS= .0000E+00 OUTFLOW= .2696E+02 BASIN STORAGE= .7082E-13 PERCENT ERROR

FOR STORM = 4 STORM AREA (SQ MI) = 10.00									
RCAP3	MANE	.64	61.84	805.88	.60	5.00	61.83	805.00	.60

NTINUITY SUMMARY (AC-FT) - INFLOW= .2446E+02 EXCESS= .0000E+00 OUTFLOW= .2446E+02 BASIN STORAGE= .7091E-13 PERCENT ERROR

FOR STORM = 5 STORM AREA (SQ MI) = 20.00									
RCAP3	MANE	.63	58.74	806.20	.53	5.00	58.74	805.00	.53

NTINUITY SUMMARY (AC-FT) - INFLOW= .2195E+02 EXCESS= .0000E+00 OUTFLOW= .2195E+02 BASIN STORAGE= .6962E-13 PERCENT ERROR

```
* NORMAL END OF HEC-1 ***


-----DSS---ZCLOSE Unit:  71,   File: PLANB.DSS
          Pointer Utilization:   .25
          Number of Records:     20
          File Size:     46.9  Kbytes
          Percent Inactive:    .0
```

PLAN C

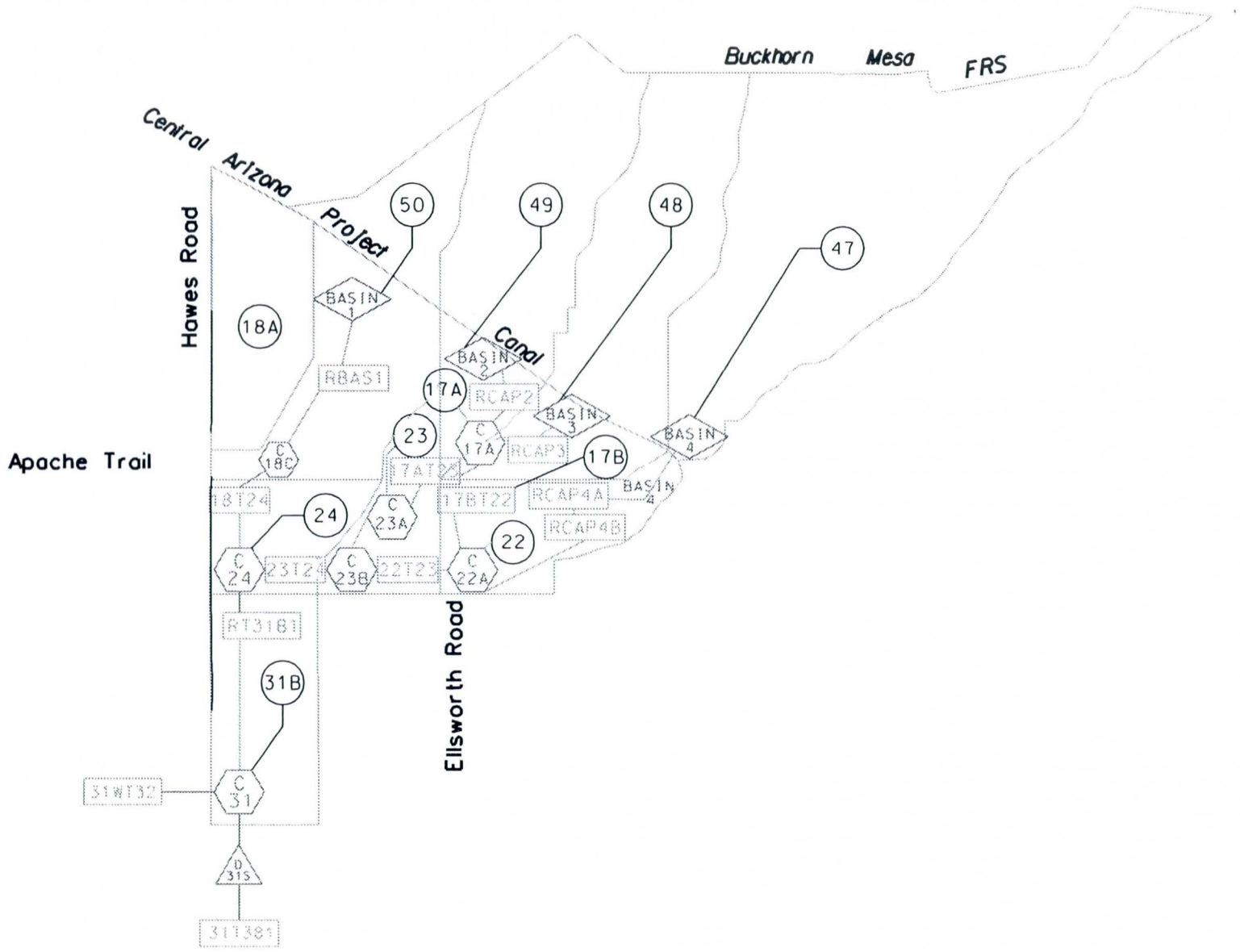
Buckhorn Mesa FRS
Central Arizona Project Canal
Hawes Road
Apache Trail
Ellsworth Road
50
49
48
47
18A
17A
17B
23
24
22
31B
BASIN 1
BASIN 2
BASIN 3
BASIN 4
RBAS1
RCAP2
RCAP3
RCAP4A
RCAP4B
C 18C
C 17A
C 23A
C 23B
C 22A
C 24
C 31
D 31S
18T24
7AT22
17BT22
23T24
22T23
RT31B1
31WT32
31T381

```
****************************************
***********************************
                                    *                                                    *
 FLOOD HYDROGRAPH PACKAGE  (HEC-1)  *                                                    *    U.S. ARMY CORPS OF
INEERS     *
            JUL   1997              *                                                    *    HYDROLOGIC ENGINEERING
TER    *
          VERSION 4.1               *                                                    *          609 SECOND STREET
                                    *                                                    *       DAVIS, CALIFORNIA 9561
 RUN DATE   25AUG99  TIME  11:02:00 *                                                    *           (916) 756-1104
                                    *                                                    *
****************************************
***********************************
```

```
X     X  XXXXXXX   XXXXX           X
X     X  X        X     X         XX
X     X  X        X                X
XXXXXXX  XXXX     X        XXXXX   X
X     X  X        X                X
X     X  X        X     X          X
X     X  XXXXXXX   XXXXX          XXX
```

THIS PROGRAM REPLACES ALL PREVIOUS VERSIONS OF HEC-1 KNOWN AS HEC1 (JAN 73), HEC1GS, HEC1DB, AND HEC1KW.

THE DEFINITIONS OF VARIABLES -RTIMP- AND -RTIOR- HAVE CHANGED FROM THOSE USED WITH THE 1973-STYLE INPUT
UCTURE.

THE DEFINITION OF -AMSKK- ON RM-CARD WAS CHANGED WITH REVISIONS DATED 28 SEP 81. THIS IS THE FORTRAN77 VERSION
NEW OPTIONS: DAMBREAK OUTFLOW SUBMERGENCE , SINGLE EVENT DAMAGE CALCULATION, DSS:WRITE STAGE FREQUENCY,
DSS:READ TIME SERIES AT DESIRED CALCULATION INTERVAL LOSS RATE:GREEN AND AMPT INFILTRATION
KINEMATIC WAVE: NEW FINITE DIFFERENCE ALGORITHM

HEC-1 INPUT PAGE 1

```
LINE          ID.......1.......2.......3.......4.......5.......6.......7.......8.......9......10

  1           ID
  2           ID   ORIGINAL MODEL FROM THE EAST MESA ADMP
  3           ID   LANDUSE IS OF THE FUTURE CONDITION
  4           ID   SOME ROUTINGS WERE TAKEN FROM THE DIBBLE MODEL(NDIF.DAT) AS PROVIDED FOR THE
  5           ID   DRAINAGE IMPROVEMENTS ASSOCIATED WITH THE CAP BASINS AND DOWNSTREAM IMPROVE-
  6           ID   MENTS WITH THE OUTLETS OF THESE BASINS
  7           ID
  8           ID   100YR-24HR EVENT
  9           ID
 10           ID   SUBBASIN RETENTION VOLUMES ARE BASED UPON THE 100 YEAR 2 HR STORM.THE AMOUNT
 11           ID   OF THIS ULTIMATE VOLUME WAS REDUCED TO ACCOUNT FOR THE PORTION OF EACH
 12           ID   SUBBASIN THAT IS ALREADY DEVELOPED AND DOES NOT HAVE RETENTION FOR THAT
 13           ID   DEVELOPMENT. THE AMOUNT WAS FURTHER LOWERED TO ACCOUNT FOR SOME OF THE RUNOFF
 14           ID   NOT GETTING INTO RETENTION BASINS
 15           ID
 16           ID   FILENAME IS PLANC.DAT
 17           ID
 18           ID   DDM MCUHP2 MESA AREA DRAINAGE MASTER PLAN
              *DIAGRAM
 19           IT       5  1APR97    0000    1000
 20           IO       5
 21           IN      15
              *
 22           JD    3.60    0.01
 23           PC    .000    .002    .005    .008    .011    .014    .017    .020    .023    .026
 24           PC    .029    .032    .035    .038    .041    .044    .048    .052    .056    .060
 25           PC    .064    .068    .072    .076    .080    .085    .090    .095    .100    .105
 26           PC    .110    .115    .120    .126    .135    .142    .150    .158    .166    .175
 27           PC    .184    .195    .208    .224    .243    .266    .318    .479    .678    .716
 28           PC    .743    .764    .781    .795    .808    .818    .828    .837    .844    .851
 29           PC    .858    .865    .871    .877    .883    .889    .895    .900    .905    .910
 30           PC    .915    .919    .923    .927    .931    .935    .939    .943    .947    .951
 31           PC    .954    .957    .960    .963    .966    .969    .972    .975    .978    .981
```

```
 32          PC    .984    .987    .990    .993    .996    .999   1.000
 33          JD    3.58       1
 34          JD    3.49       5
 35          JD    3.38    10.0
 36          JD    3.27    20.0
             * JD  3.24    30.0
             * JD  3.10    60.0
             * JD  3.05    90.0
             * DDM   ***** Updated *****
             .
 37          KK      48
 38          KM   BASIN 48
 39          KM    THE FOLLOWING PARAMETERS WERE PROVIDED FOR THIS BASIN
 40          KM    L=      1.6  Lca=       .8   S=   80.2  Kn= .060  LAG=  41.6
 41          KM    PHOENIX VALLEY S-GRAPH WAS USED FOR THIS BASIN
 42          BA     .77
 43          LG     .27     .25    4.10     .54   22.00
 44          UI     62.     75.    223.    304.    360.    431.    532.    752.    705.    560.
 45          UI    472.    387.    317.    240.    141.    107.     90.     62.     45.     19.
 46          UI     19.     19.     19.     19.      0.      0.      0.      0.      0.      0.
 47          UI      0.      0.      0.      0.      0.      0.      0.      0.      0.      0.
             *
                                          HEC-1 INPUT                                          PAGE  2

LINE         ID.......1.......2.......3.......4.......5.......6.......7.......8.......9......10


 48          KK     D48
 49          KM    RETAIN 100 YEAR 2 HOUR, (48% FOR FUTURE DEVELOPMENT)
 50          DT     D48      28
 51          DI       0   10000
 52          DQ       0   10000
             *
             * DDM   ***** Preserved *****

 53          KK    CAP3
 54          RS       1    FLOW      -1
 55          SV       0   0.934   1.222   4.303   13.13
 56          SE  1564.6  1567.5    1568    1570    1572
 57          SQ       0       0     143     750    1530
             *
             * *******FOLLOWING ADDED FOR ADMP**************

 58          KK  BASIN3
             * KO     1       2
 59          KM        NEW DETENTION BASIN LOCATED DOWNSTREAM FROM CAP3
 60          KM        WITH 30-INCH OUTFALL    BASIN AE2B (BASIN 3)
 61          RS       1    STOR      -1
 62          SV       0       0       0     .85    3.27    6.44   10.21   14.45   31.29
 63          SE    1555    1556    1557    1558    1559    1560    1561    1562    1565
 64          SQ       0       6      18      24      30      36      42      48      54    67.5
 65          SQ     107     149     205     455
 66          SE  1555.0  1556.3  1557.1  1557.5  1557.9  1558.4  1559.0  1559.6  1560.4  1562.3
 67          SE  1562.8  1563.1  1563.3  1564.1
             *
             *  REACH C3-1
             *  520' FEET OF EXISTING CHANNEL NOT MODELED DUE TO SHORT ROUTING LENGTH
             *

 68          KK   RCAP3
 69          KM   REACH C3C-1
 70          KM   ROUTE BASIN 3 FLOW IN CONC. PIPE TO INTERSECTION OF ELLSWORTH & APACHE
 71          KM   THROUGH A 48-INCH PIPE
 72          RK    1500  0.0127   0.012            CIRC       4
             *
             * DDM   ***** Updated *****

 73          KK      49
 74          KM   BASIN 49
 75          KM    THE FOLLOWING PARAMETERS WERE PROVIDED FOR THIS BASIN
 76          KM    L=      1.6  Lca=       .8   S=   73.6  Kn= .060  LAG=  42.6
 77          KM    PHOENIX VALLEY S-GRAPH WAS USED FOR THIS BASIN
 78          BA     .79
 79          LG     .27     .25    4.15     .53   23.00
 80          UI     62.     68.    220.    296.    354.    420.    509.    709.    747.    583.
 81          UI    493.    406.    335.    271.    171.    110.    102.     66.     62.     21.
 82          UI     19.     19.     19.     19.     19.      0.      0.      0.      0.      0.
 83          UI      0.      0.      0.      0.      0.      0.      0.      0.      0.      0.
             *
                                          HEC-1 INPUT                                          PAGE  3
```

```
LINE          ID.......1.......2.......3.......4.......5.......6.......7.......8.......9......10

 84           KK     D49
 85           KM    RETAIN 100 YEAR 2 HOUR, (54% FOR FUTURE DEVELOPMENT)
 86           DT     D49      27
 87           DI       0   10000
 88           DQ       0   10000
              * DDM   ***** Preserved *****
              .
 89           KK    CAP2
 90           RS       1    FLOW      -1
 91           SV       0    0.02   0.538   2.545  13.729
 92           SE  1565.1    1566    1568    1570    1572
 93           SQ       0      60     340     807    1395
              *
              * *******FOLLOWING ADDED FOR ADMP********

 94           KK  BASIN2
              * KO     1       2
 95           KM        NEW DETENTION BASIN LOCATED DOWNSTREAM FROM CAP2
 96           KM        WITH 30-INCH OUTFALL      (EH1B)
 97           RS       1    STOR
 98           SV       0     .05     .62    1.99    4.97   10.20   16.71   20.19   23.76
 99           SE    1550    1551    1552    1553    1554    1555    1556  1556.5    1557
100           SQ       0      10      20      30      40      50      58
101           SE    1549  1550.0  1550.0  1552.3  1553.4  1555.9  1558.1
              *

102           KK  RCAP2B
103           KM   REACH C2-1
104           KM   ROUTE RCAP2A THROUGH CONCRETE CHANNEL
105           KM    TO CAP BASIN 3 OUTLET CHANNEL (NEAR ELLSWORTH ROAD AND APACHE TRAIL)
106           RS       1    FLOW      -1
107           RC   0.025   0.015   0.025     850  0.0071
108           RX       0     1.5     5.5    11.6    15.6    21.8    24.8      27
109           RY     5.2     5.1     4.1       0       0     4.1     5.1     5.2
              *
              * DDM   ***** Updated *****

110           KK     17A
111           KM   BASIN 17A
112           KM    THE FOLLOWING PARAMETERS WERE PROVIDED FOR THIS BASIN
113           KM    L=       .7  Lca=       .5   S=   60.6  Kn= .084  LAG=  36.9
114           KM    PHOENIX VALLEY S-GRAPH WAS USED FOR THIS BASIN
115           BA     .18
116           LG     .23     .24    4.00     .56   43.00
117           UI     16.     28.     65.     86.    104.    130.    187.    189.    145.    119.
118           UI     95.     75.     47.     29.     25.     16.     11.      5.      5.      5.
119           UI      5.      5.      0.      0.      0.      0.      0.      0.      0.      0.
120           UI      0.      0.      0.      0.      0.      0.      0.      0.      0.      0.
              *
                                        HEC-1 INPUT                                          PAGE  4

LINE          ID.......1.......2.......3.......4.......5.......6.......7.......8.......9......10

121           KK    D17A
122           KM    RETAIN 100 YEAR 2 HOUR, (29% FOR FUTURE DEVELOPMENT)
123           DT    D17A       4
124           DI       0   10000
125           DQ       0   10000
              *

126           KK   C17A1
127           KM
128           HC       2
              *

129           KK   C17A2
130           KM
131           HC       2
              *

132           KK   AT23B
133           KM   REACH AE-4, AE-5
134           KM   PART 1 OF 2
135           KM   ROUTE FROM CONFLUENCE OF CAP BASIN 2 CHANNEL WITH CAP BASIN 3,
136           KM     WHICH IS 0.06 MILES NORTH OF APACHE TRAIL, TO APACHE TRAIL,
137           KM     ABOUT 0.1 MILES EAST OF ELLSWORTH ROAD
138           RS       1    FLOW      -1
```

```
139          RC    .025    .015    .025     570   .0021
140          RX       0      12      16      24      28      36      40      52
141          RY       5     4.9     3.9       0       0     3.9     4.9       5
             *

142          KK   AT23A
143          KM   REACH AE-1, AE-2, AE-3
144          KM   PART 2 OF 2
145          KM   ROUTE FROM 0.1 MILES EAST OF ELLSWORTH ROAD ON APACHE TRAIL TO
146          KM     BROADWAY ROAD 0.125 MILES WEST OF 90th STREET (OR 0.625 MILES
147          KM     WEST OF ELLSWORTH ROAD)
148          RS       1    FLOW      -1
149          RC   0.025   0.025   0.025    3820  0.0029
150          RX       0     2.9     6.9    22.5    37.5    51.5    57.1      60
151          RY       5     4.9     3.9       0       0     3.9     4.9       5
             *
             * DDM   ***** Updated *****

152          KK      23
153          KM   BASIN 23
154          KM    THE FOLLOWING PARAMETERS WERE PROVIDED FOR THIS BASIN
155          KM    L=       1.0  Lca=       .3   S=   65.0  Kn= .047  LAG=  20.1
156          KM    PHOENIX VALLEY S-GRAPH WAS USED FOR THIS BASIN
157          BA     .28
158          LG     .22     .25    4.00     .58   42.00
159          UI     55.    201.    304.    505.    440.    297.    180.     79.     48.     14.
160          UI     14.     14.      0.      0.      0.      0.      0.      0.      0.      0.
161          UI      0.      0.      0.      0.      0.      0.      0.      0.      0.      0.
             *
                                          HEC-1 INPUT                                          PAGE  5

LINE         ID.......1.......2.......3.......4.......5.......6.......7.......8.......9......10


162          KK     D23
163          KM    RETAIN 100 YEAR 2 HOUR, (49% FOR FUTURE DEVELOPMENT)
164          DT     D23      10
165          DI       0   10000
166          DQ       0   10000
             *

167          KK    C23A
168          KM
169          HC       2
             *
             * DDM   ***** Updated *****

170          KK     17B
171          KM   BASIN 17B
172          KM    THE FOLLOWING PARAMETERS WERE PROVIDED FOR THIS BASIN
173          KM    L=        .8  Lca=       .6   S=   50.0  Kn= .073  LAG=  36.8
174          KM    PHOENIX VALLEY S-GRAPH WAS USED FOR THIS BASIN
175          BA     .22
176          LG     .19     .24    4.00     .56   55.00
177          UI     20.     35.     81.    107.    129.    162.    233.    232.    179.    146.
178          UI    117.     92.     57.     35.     30.     20.     13.      6.      6.      6.
179          UI      6.      0.      0.      0.      0.      0.      0.      0.      0.      0.
180          UI      0.      0.      0.      0.      0.      0.      0.      0.      0.      0.
             *

181          KK    D17B
182          KM    RETAIN 100 YEAR 2 HOUR, (27% FOR FUTURE DEVELOPMENT)
183          DT    D17B       5
184          DI       0   10000
185          DQ       0   10000
             *
             * DDM   ***** Preserved *****

186          KK  17BT22
187          KM   ROUTE FLOWS FROM S17 TO C22 VIA LINED CHANNEL
188          RS       3    FLOW      -1
189          RC   0.035   0.015   0.035    2700  0.0114
190          RX       0       1       3       6      18      21      36      70
191          RY    6.25    6.10       6       0       0       3    3.25     3.5
             *
             * DDM   ***** Updated *****

192          KK      47
193          KM   BASIN 47
194          KM    THE FOLLOWING PARAMETERS WERE PROVIDED FOR THIS BASIN
195          KM    L=       3.0  Lca=      1.5   S=   51.2  Kn= .055  LAG=  66.7
```

```
196          KM    PHOENIX VALLEY S-GRAPH WAS USED FOR THIS BASIN
197          BA    1.67
198          LG     .28     .25    4.00     .55   17.00
199          UI     85.     85.     85.    265.    337.    402.    456.    500.    559.    633.
200          UI    721.    921.   1086.    972.    828.    734.    667.    584.    519.    460.
201          UI    404.    343.    250.    164.    148.    139.    126.     85.     85.     74.
202          UI     26.     26.     26.     26.     26.     26.     26.     26.     26.      0.
                                          HEC-1 INPUT                                          PAGE  6

LINE         ID.......1.......2.......3.......4.......5.......6.......7.......8.......9......10

203          UI      0.      0.      0.      0.      0.      0.      0.      0.      0.      0.
204          UI      0.      0.      0.      0.      0.      0.      0.      0.      0.      0.
             *

205          KK     D47
206          KM    RETAIN 100 YEAR 2 HOUR, (69% FOR FUTURE DEVELOPMENT)
207          DT     D47      68
208          DI       0   10000
209          DQ       0   10000
             *
             * ***************BELOW MODIFIED FOR ADMP*************************
             *

210          KK  BASIN4
             * KO     1       2
211          KM   ROUTE THROUGH OVERCHUTES 4 AND 5, HYDRAULICALLY CONNECTED
212          KM   STORAGE AND DISCHARGE WERE ADDED AT APPROPRIATE ELEVATIONS
213          KM   OUTFLOW THROUGH TWO 30-INCH PIPES.
214          KM   BASIN4 (BY4B)
215          RS       1    STOR      -1
216          SV       0     .01    0.31    1.85    5.61   11.12   17.18   23.67
217          SE    1568    1569    1570    1571    1572    1573    1574    1575
218          SQ       0    12.5    37.5      50      53      75    87.5     100   112.5     125
219          SQ     131
220          SE  1567.8  1569.0  1570.0  1570.4  1570.5  1571.5  1572.2  1572.9  1573.7  1574.6
221          SE    1575
             * NO DIVERSION THROUGH THE OLD CHANNEL FROM OVERCHUTE 5
             *

222          KK  RCAP4A
223          KM   REACH C4-4, C4-3, C4-2, + culverts C4C-2 & C4C-3 (CAP BASIN 4 OUTLET CHANNEL)
224          KM   ROUTE CAP BASIN 4
225          KM   ROUTE FLOW FROM BASIN 4 TO CULVERT CROSSING (C4C-1) @ 0.25 MILES SOUTH OF APA
226          KM      TRAIL AND 0.25 MILES WEST OF CRISMON ROAD.
227          RS       1    FLOW      -1
228          RC   0.025   0.025   0.025    2210  0.0033
229          RX       0      10      22      37      45      60      70      80
230          RY       6       6     3.8       0       0     3.8       6       6
             *

231          KK  RCAP4B
232          KM   REACH C4-1 and C4-2 including Culvert C4C-1 (CAP BASIN 4 OUTLET CHANNEL)
233          KM   ROUTE FLOW FROM CULVERT C4C-1 TO CONFLUENCE WITH BROADWAY CHANNEL AT 98th
234          KM     STREET, ABOUT 0.3 MILES SOUTH OF APACHE TRAIL.
235          RS       1    FLOW      -1
236          RC   0.025   0.025   0.025     300  0.0020
237          RX       0      10      22      37      45      60      70      80
238          RY       6       6     3.8       0       0     3.8       6       6
             *
                                          HEC-1 INPUT                                          PAGE  7

LINE         ID.......1.......2.......3.......4.......5.......6.......7.......8.......9......10

239          KK  RCAP4C
240          KM   REACH BY-12 AND BY-13, including culverts BYC-12, BYC-11, and BYC-10.
241          KM     (THIS ROUTING WITHIN THE BROADWAY CHANNEL.)
242          KM    ROUTE FLOW FROM 98th STREET TO 0.25 MILES EAST OF ELLSWORTH ROAD.
243          RS       1    FLOW      -1
244          RC    .025    .025    .025    2790  0.0021
245          RX       0       4     9.6      28      48    66.4      72      76
246          RY       6       6     4.6       0       0     4.6       6       6
             *

247          KK  RCAP4D
248          KM   REACH BY-8, BY-9, BY-10, BY-11 plus culverts BYC-10, BYC-9, BYC-8, & BYC-7.
249          KM     (THIS ROUTING WITHIN THE BROADWAY CHANNEL.)
250          KM    ROUTE FLOW FROM 0.25 MILES EAST OF ELLSWORTH ROAD TO ELLSWORTH ROAD.
251          RS       1    FLOW      -1
252          RC    .025    .015    .025    1360  0.0018
```

```
253          RX       0       6    13.1    22.5      38    47.4      54      60
254          RY       6       6     4.7       0       0     4.7       6       6
             *
             * DDM   ***** Updated *****

255          KK      22
256          KM   BASIN 22
257          KM    THE FOLLOWING PARAMETERS WERE PROVIDED FOR THIS BASIN
258          KM    L=      1.2  Lca=       .3   S=   51.3  Kn= .048  LAG=  22.8
259          KM    PHOENIX VALLEY S-GRAPH WAS USED FOR THIS BASIN
260          BA     .41
261          LG     .22     .25    4.00     .57   52.00
262          UI     60.    229.    349.    509.    699.    491.    346.    212.    102.     65.
263          UI     26.     18.     18.      0.      0.      0.      0.      0.      0.      0.
264          UI      0.      0.      0.      0.      0.      0.      0.      0.      0.      0.
             *

265          KK     D22
266          KM    RETAIN 100 YEAR 2 HOUR, (33% FOR FUTURE DEVELOPMENT)
267          DT     D22      11
268          DI       0   10000
269          DQ       0   10000
             *
             * DDM   ***** Preserved *****

270          KK    C22A
271          KM   COMBINE FLOWS FROM CAP OVERCHUTES 4 & 5 AND SUBBASIN 22
272          HC       3
             *

273          KK   22T23
274          KM   REACH BY-6, BY-7 plus exist. culvert @ ELLSWORTH ROAD,
275          KM     and culvert BYC-5.
276          KM     (THIS ROUTING WITHIN THE BROADWAY CHANNEL.)
277          KM     ROUTE FLOW FROM ELLSWORTH ROAD (C22A) TO ABOUT 0.5 MILES WEST OF
278          KM     ELLSWORTH ROAD (C23B), WHICH IS AT THE APACHE CHANNEL.
279          RS       1    FLOW      -1
280          RC    .025    .015    .025    2140  0.0018
             *    This routing based on BY-7 bottom width, depth and slope.
                                          HEC-1 INPUT                                          PAGE  8

LINE         ID.......1.......2.......3.......4.......5.......6.......7.......8.......9......10

281          RX       0       6    12.8    22.0      38    47.2      54      60
282          RY       6       6     4.6       0       0     4.6       6       6
             *
             * DDM   ***** Preserved *****

283          KK    C23B
284          KM   COMBINE FLOWS FROM C22, C17A, AND S23 AT C23
285          HC       2
             *

286          KK   23T24
287          KM   REACH BY-1, BY-2, BY-3, BY-4 AND BY-5, plus
288          KM     culverts BYC-1, BYC-2, BYC-3, BYC-4.
289          KM     (THIS ROUTING WITHIN THE BROADWAY CHANNEL.)
290          KM     ROUTE FLOW FROM APACHE CHANNEL ABOUT 0.5 MILES WEST OF ELLSWORTH
291          KM     ROAD (C23B) TO HAWES ROAD (C24).
292          RS       1    FLOW      -1
293          RC   0.025   0.015   0.025    3212  0.0017
294          RX       0       8    16.2      28      43    54.8      63      71
295          RY     5.9     6.0     5.9       0       0     5.9     6.0     5.9
             *
             * DDM   ***** Updated *****

296          KK      24
297          KM   BASIN 24
298          KM    THE FOLLOWING PARAMETERS WERE PROVIDED FOR THIS BASIN
299          KM    L=       .9  Lca=       .5   S=   43.5  Kn= .052  LAG=  27.2
300          KM    PHOENIX VALLEY S-GRAPH WAS USED FOR THIS BASIN
301          BA     .29
302          LG     .24     .25    4.00     .58   43.00
303          UI     36.    106.    186.    243.    353.    419.    301.    226.    164.     82.
304          UI     58.     36.     15.     11.     11.     11.      0.      0.      0.      0.
305          UI      0.      0.      0.      0.      0.      0.      0.      0.      0.      0.
             *

306          KK     D24
307          KM    RETAIN 100 YEAR 2 HOUR, (8% FOR FUTURE DEVELOPMENT)
308          DT     D24       2
```

```
 309          DI        0   10000
 310          DQ        0   10000
              *

 311          KK     C24A
 312          KM     COMBINE FLOWS FROM SUBBASIN 24 WITH FLOWS FROM BROADWAY CHANNEL "23T24"
 313          HC        2
              *
              * DDM    ***** Updated *****
              *

 314          KK       50
 315          KM    BASIN 50
 316          KM     THE FOLLOWING PARAMETERS WERE PROVIDED FOR THIS BASIN
 317          KM     L=        .9  Lca=        .4   S=   81.4  Kn= .079  LAG=  33.8
 318          KM     PHOENIX VALLEY S-GRAPH WAS USED FOR THIS BASIN
 319          BA      .28
                                          HEC-1 INPUT                                          PAGE  9

LINE          ID.......1.......2.......3.......4.......5.......6.......7.......8.......9......10

 320          LG      .23      .24     4.00      .55    43.00
 321          UI      27.      55.     118.     153.     190.     259.     335.     259.     208.     163.
 322          UI     126.      76.      47.      37.      27.      11.       8.       8.       8.       8.
 323          UI       0.       0.       0.       0.       0.       0.       0.       0.       0.       0.
 324          UI       0.       0.       0.       0.       0.       0.       0.       0.       0.       0.
              *

 325          KK      D50
 326          KM     RETAIN 100 YEAR 2 HOUR, (64% FOR FUTURE DEVELOPMENT)
 327          DT      D50       13
 328          DI        0   10000
 329          DQ        0   10000
              *
              * DDM    ***** Preserved *****

 330          KK     CAP1
 331          RS        1     FLOW       -1
 332          SV        0    0.091    0.575    3.319   13.256
 333          SE     1566     1568     1570     1572     1574
 334          SQ        5       90      275      470      610
              *

 335          KK   BASIN1
              * KO      1        2
 336          KM         NEW DETENTION BASIN LOCATED DOWNSTREAM FROM CAP1
 337          KM         WITH 24-INCH OUTFALL
 338          RS        1     STOR       -1
 339          SV        0        0      0.1     1.26      4.1     7.59     8.31
 340          SE     1559     1560     1561     1562     1563     1564   1564.2
 341          SQ        0        5       10       15       20       25       30       34       36
 342          SQ       67      129      234
 343          SE   1559.0   1560.1   1560.6   1561.1   1561.6   1562.3   1563.1   1563.9   1564.2
 344          SE     1565   1565.5     1566
              *

 345          KK    RBAS1
 346          KM    ROUTE FLOWS FROM BASIN1 AT THE CAP TO SUBBASIN 18 (APACHE TRAIL AND HAWES RD)
 347          KM     NO IMPROVED CHANNEL
 348          RS       11     FLOW       -1
 349          RC     0.05    0.045     0.05     7000     0.02
 350          RX      100      200      300      301      303      304      404      504
 351          RY        6        5        2        0        0        2        5        6
              *
              * DDM    ***** Updated *****

 352          KK      18c
 353          KM    BASIN 18c
 354          KM     THIS IS THE FUTURE SUBBASIN
 355          KM     THE FOLLOWING PARAMETERS WERE PROVIDED FOR THIS BASIN
 356          KM     L=       1.2  Lca=        .7   S=   66.1  Kn= .061  LAG=  37.2
 357          KM     PHOENIX VALLEY S-GRAPH WAS USED FOR THIS BASIN
 358          BA      .50
 359          LG      .22      .25     4.00      .57    44.00
 360          UI      45.      75.     180.     237.     287.     355.     507.     531.     407.     335.
 361          UI     268.     214.     140.      80.      72.      45.      34.      14.      14.      14.
                                          HEC-1 INPUT                                          PAGE 10

LINE          ID.......1.......2.......3.......4.......5.......6.......7.......8.......9......10

 362          UI      14.      14.       0.       0.       0.       0.       0.       0.       0.       0.
```

```
363          UI      0.      0.      0.      0.      0.      0.      0.      0.      0.      0.
             *

364          KK    D18c
365          KM    RETAIN THE 100 YEAR 2 HOUR VOLUME (53% OF BASIN HAS RETENTION
366          DT    D18c      20
367          DI       0   10000
368          DQ       0   10000
             *
             * DDM   ***** Preserved *****

369          KK    C18C
370          KM    COMBINE FLOWS FROM ROUTED FLOW OF SUBBASIN 50 WITH FLOW FROM 18c
371          KM    BEFORE CROSSING UNDERNEATH APACHE BLVD AND GOING INTO THE HAWES CHANNEL
372          HC       2
             *
             * DDM   ***** Preserved *****

373          KK   18T24
374          KM   REACH HS-6, HS-7, HS-8
375          KM   ROUTE FLOWS FROM SUBBASIN 18A TO SUBBASIN 24.
376          RS       1    FLOW      -1
377          RC    .025    .015    .025    2730  0.0017
378          RX       0       8      16      26      46      58      65      73
379          RY     5.0     5.1     5.2       0       0     5.2     5.1     5.0
             *  THE ABOVE CHANNEL DIMS ARE BASED ON THE NARROWEST DESIGN REACH.
             *
             *
             * DDM   ***** Preserved *****

380          KK     C24
381          KM   COMBINE FLOWS FROM C23, S18A AND S24
382          ZW     A=HAWES RD @ BROADWAY RD   B=HAWES CHANNEL PROJECT  C=FLOW   F=HYDROGRAPH
383          HC       2
             *
             * DDM   ***** Preserved *****

384          KK  BRDHAW
385          KM   NO FLOWIS DIVERTED TO THE BROADWAY STORM DRAIN WITH THIS PLAN
386          KM   ALL OF THE FLOWS CONTINUE DOWN THE HAWES ROAD CHANNEL
387          DT  DIVBRD
388          DI       0     200     400     500     700    1000
389          DQ       0       0       0       0       0       0
             *

390          KK  RT31B1
391          KM   THIS ROUTING STEP HAS BEEN BROKEN OUT OF A LARGER SEQUENCE FOR SIMPLICITY
392          KM   REACH HS-5 plus culvert HSC-4
393          KM   ROUTE FLOWS FROM HAWES ROAD AND BROADWAY ROAD (C24) TO CORAL BELL AVENUE.
394          KO                                      21                      10
395          ZW   A=FLOW AFTER 360 CFS DIVERT TO WEST B=HAWES CHANNEL PROJECT C=FLOW  F=HYDRO
396          RS       1    FLOW      -1
397          RC    .025    .015    .025    1312  0.0015
398          RX       0       8      15      28      68      81      89      97
                                          HEC-1 INPUT                                          PAGE 11

LINE         ID.......1.......2.......3.......4.......5.......6.......7.......8.......9......10

399          RY     6.2     6.4     6.5       0       0     6.5     6.4     6.2
             *

400          KK  RT31B2
401          KM   THIS ROUTING STEP HAS BEEN BROKEN OUT OF A LARGER SEQUENCE FOR SIMPLICITY
402          KM   REACH HS-4A AND HS4-B plus culvert HSC-3
403          KM   ROUTE FLOWS FROM CORAL BELL AVENUE TO EMELITA AVENUE.
404          RS       1    FLOW      -1
405          RC    .025    .015    .025    2080  0.0018
406          RX       0       8    15.9      16      66    66.1      74      82
407          RY     5.8     5.9     6.1       0       0     6.1     5.9     5.8
             *

408          KK  RT31B3
409          KM   THIS ROUTING STEP HAS BEEN BROKEN OUT OF A LARGER SEQUENCE FOR SIMPLICITY
410          KM   REACH HS-3
411          KM    THIS REACH IS AN EXISTING CHANNEL FOR THE CRESCENT RUN MOBILE HOME PARK.
412          KM    The existing channel 5.6 ft deep has no freeboard.  Overbank flows in street
413          KM    Routing values per channel design plans,
414          KM    Sheet 2 of 19, City of Mesa Project 97-69.
415          KM   ROUTE FLOWS FROM EMELITA AVENUE TO SOUTHERN AVENUE (C31) WITHIN SUBBASIN 31B.
416          RS       1    FLOW      -1
417          RC    .025    .015    .025    1935  0.0033
```

```
418          RX       0    35.6    41.6      50    66.7    75.1    81.1    92.0
419          RY     5.4     4.7     5.6       0       0     5.6     7.6     7.7
             *
             * DDM   ***** Updated *****
             *

420          KK     31B
421          KM   BASIN 31B
422          KM    THE FOLLOWING PARAMETERS WERE PROVIDED FOR THIS BASIN
423          KM    L=      1.2  Lca=       .5   S=   29.7  Kn= .049  LAG=  30.8
424          KM    PHOENIX VALLEY S-GRAPH WAS USED FOR THIS BASIN
425          BA     .47
426          LG     .24     .25    4.45     .46   37.00
427          UI     52.    125.    240.    309.    399.    601.    544.    416.    321.    243.
428          UI    141.     88.     63.     44.     16.     16.     16.     16.      0.      0.
429          UI      0.      0.      0.      0.      0.      0.      0.      0.      0.      0.
             *

430          KK    D31B
431          KM    RETAIN 100 YEAR 2 HOUR, (66% FOR FUTURE DEVELOPMENT)
432          DT    D31B      23
433          DI       0   10000
434          DQ       0   10000
             *
             * DDM   ***** Preserved *****

435          KK     C31
436          KM   COMBINE FLOWS FROM C24  WITH S31A AND S31B
437          ZW   A=FLOW SOUTHERN AND HAWES BEFORE SPLIT BOX B=HAWES CHANNEL PROJ C=FLOW F=HYDR
438          HC       2
             *
             * DDM   ***** Preserved *****
                                        HEC-1 INPUT                                          PAGE 12

LINE         ID.......1.......2.......3.......4.......5.......6.......7.......8.......9......10


439          KK    D31S
440          KM    THIS DIVERT RECORD IS FOR THE BOX CULVERT SYSTEM AT SOUTHERN AVE AND HAWES
441          KM OK IT IS BASED UPON INLET CONTROL ANALYSIS OF THE FOLLOWING STRUCTURES
442          KM  R 3-8'X4' CBC SOUTH TO HAWES CHANNEL,  2-10'X6' CBC WEST TO THE SOSSAMAN CHANL
443          KM    CULVERT TO SOUTH HAS TWO EXISTING CELLS WITH ONE ADDITIONAL CELL PLANNED
444          KM    CULVERTS TO WEST ARE DESIGNED TO HAVE INVERTS 2' BELOW THE EXISTING CULVERTS
445          DT    D31S
             *  THESE NEW CARDS BASED UPON HEC-RAS ANALYSIS
446          DI       0     144     182     252     380     454     544     671     758     844
447          DI     976    1098    1184    1280    1412    1544    1646    1738    1830
448          DQ       0       0       0      32      64      96     144     211     238     264
449          DQ     336     408     444     480     552     624     666     708     750
             *
             * DDM   ***** Preserved *****

450          KK  31WT32
451          KM   ROUTE FLOWS FROM D31A TO C32
452          RS    1.76    FLOW      -1
453          RC    .035    .022    .035    5280   .0027
454          RX       0    2005    2012    2012    2106    2106    2113    3122
455          RY     4.5     4.5     3.5       0       0     3.5     4.5     4.5
             *

456          KK    D31S
457          KM    RECALL THE DIVERTED FLOW TO BE ROUTED TO THE SOUTH IN THE HAWES CHANNEL
458          DR    D31S
             *

459          KK  31T381  ROUTED IN TWO STEPS DUE TO CHANNEL DISSIMILARITY.
460          KM   REACH HS-2 plus culvert HSC-2
461          KM     ROUTE FLOWS FROM SOUTHERN AVENUE (C31) IN THE HAWES CHANNEL.
462          KM   REACH HS-2 IS A PROPOSED CHANNEL SOON-TO-BE-CONSTRUCTED.  IT IS 4.5 FEET
463          KM     DEEP, WITH FREEBOARD. CHANNEL CROSS-SECTION FROM DESIGN PLANS FOR
464          KM     SOUTHERN AVENUE DRAINAGE IMPROVEMENTS.  SHEET 28 OF 43
465          KM     CITY OF MESA PROJECT NO. 97-56.1 DESIGN PLANS BY ENTELLUS
466          KM     DATED 8/8/97 REV. 12/19/97
467          RS       1    FLOW      -1
468          RC   0.025   0.015   0.025    1248   .0022
469          RX       0      32      37      46      56      65      73      75
470          RY       5     7.0     4.5       0       0     4.5     9.0     9.5
             *

471          KK  31T382
472          KM   REACH HS-1 plus culvert HSC-1
```

```
418          RX       0    35.6    41.6      50    66.7    75.1    81.1    92.0
419          RY     5.4     4.7     5.6       0       0     5.6     7.6     7.7
             *
             * DDM   ***** Updated *****
             *

420          KK     31B
421          KM   BASIN 31B
422          KM    THE FOLLOWING PARAMETERS WERE PROVIDED FOR THIS BASIN
423          KM    L=      1.2  Lca=       .5   S=   29.7  Kn= .049  LAG=  30.8
424          KM    PHOENIX VALLEY S-GRAPH WAS USED FOR THIS BASIN
425          BA     .47
426          LG     .24     .25    4.45     .46   37.00
427          UI     52.    125.    240.    309.    399.    601.    544.    416.    321.    243.
428          UI    141.     88.     63.     44.     16.     16.     16.     16.      0.      0.
429          UI      0.      0.      0.      0.      0.      0.      0.      0.      0.      0.
             *

430          KK    D31B
431          KM    RETAIN 100 YEAR 2 HOUR, (66% FOR FUTURE DEVELOPMENT)
432          DT    D31B      23
433          DI       0   10000
434          DQ       0   10000
             *
             * DDM   ***** Preserved *****

435          KK     C31
436          KM   COMBINE FLOWS FROM C24  WITH S31A AND S31B
437          ZW   A=FLOW SOUTHERN AND HAWES BEFORE SPLIT BOX B=HAWES CHANNEL PROJ C=FLOW F=HYDR
438          HC       2
             *
             * DDM   ***** Preserved *****
                                    HEC-1 INPUT                                          PAGE 12

LINE         ID.......1.......2.......3.......4.......5.......6.......7.......8.......9......10


439          KK    D31S
440          KM    THIS DIVERT RECORD IS FOR THE BOX CULVERT SYSTEM AT SOUTHERN AVE AND HAWES
441          KM    IT IS BASED UPON INLET CONTROL ANALYSIS OF THE FOLLOWING STRUCTURES
442          KM    3-8'X4' CBC SOUTH TO HAWES CHANNEL,  2-10'X6' CBC WEST TO THE SOSSAMAN CHANL
443          KM    CULVERT TO SOUTH HAS TWO EXISTING CELLS WITH ONE ADDITIONAL CELL PLANNED
444          KM    CULVERTS TO WEST ARE DESIGNED TO HAVE INVERTS 2' BELOW THE EXISTING CULVERTS
445          DT    D31S
             *  THESE NEW CARDS BASED UPON HEC-RAS ANALYSIS
446          DI       0     144     182     252     380     454     544     671     758     844
447          DI     976    1098    1184    1280    1412    1544    1646    1738    1830
448          DQ       0       0       0      32      64      96     144     211     238     264
449          DQ     336     408     444     480     552     624     666     708     750
             *
             * DDM   ***** Preserved *****

450          KK  31WT32
451          KM   ROUTE FLOWS FROM D31A TO C32
452          RS    1.76    FLOW      -1
453          RC    .035    .022    .035    5280   .0027
454          RX       0    2005    2012    2012    2106    2106    2113    3122
455          RY     4.5     4.5     3.5       0       0     3.5     4.5     4.5
             *

456          KK    D31S
457          KM    RECALL THE DIVERTED FLOW TO BE ROUTED TO THE SOUTH IN THE HAWES CHANNEL
458          DR    D31S
             *

459          KK  31T381  ROUTED IN TWO STEPS DUE TO CHANNEL DISSIMILARITY.
460          KM   REACH HS-2 plus culvert HSC-2
461          KM     ROUTE FLOWS FROM SOUTHERN AVENUE (C31) IN THE HAWES CHANNEL.
462          KM   REACH HS-2 IS A PROPOSED CHANNEL SOON-TO-BE-CONSTRUCTED.  IT IS 4.5 FEET
463          KM     DEEP, WITH FREEBOARD. CHANNEL CROSS-SECTION FROM DESIGN PLANS FOR
464          KM     SOUTHERN AVENUE DRAINAGE IMPROVEMENTS.  SHEET 28 OF 43
465          KM     CITY OF MESA PROJECT NO. 97-56.1 DESIGN PLANS BY ENTELLUS
466          KM     DATED 8/8/97 REV. 12/19/97
467          RS       1    FLOW      -1
468          RC   0.025   0.015   0.025    1248   .0022
469          RX       0      32      37      46      56      65      73      75
470          RY       5     7.0     4.5       0       0     4.5     9.0     9.5
             *

471          KK  31T382
472          KM   REACH HS-1 plus culvert HSC-1
```

```
473          KM     ROUTE FLOWS TO SUPERSTITION FREEWAY (C38)
474          KM     IN THE HAWES CHANNEL.
475          RS       1    FLOW      -1
476          RC   0.025   0.015   0.025      810   .0017
477          RX       0      10      16       26      51      61      77      81
478          RY     5.3     4.8     4.9        0       0     4.9     4.6     3.6
             *
479          ZZ
```

SCHEMATIC DIAGRAM OF STREAM NETWORK

```
PUT
INE      (V) ROUTING          (--->) DIVERSION OR PUMP FLOW

NO.      (.) CONNECTOR        (<---) RETURN OF DIVERTED OR PUMPED FLOW

 37          48
              .
              .
 50           .------->     D48
 48        D48
            V
            V
 53       CAP3
            V
            V
 58     BASIN3
            V
            V
 68      RCAP3
              .
              .
 73           .          49
              .           .
              .           .
 86           .           .------->     D49
 84           .         D49
              .           V
              .           V
 89           .        CAP2
              .           V
              .           V
 94           .      BASIN2
              .           V
              .           V
102           .      RCAP2B
              .           .
              .           .
110           .           .         17A
              .           .           .
              .           .           .
123           .           .           .------->    D17A
121           .           .        D17A
              .           .           .
              .           .           .
126           .       C17A1............
              .           .
              .           .
129      C17A2............
            V
            V
132      AT23B
            V
            V
142      AT23A
              .
              .
152           .          23
              .           .
              .           .
164           .           .------->     D23
162           .         D23
              .           .
              .           .
167       C23A............
              .
              .
170           .         17B
              .           .
              .           .
183           .           .------->    D17B
181           .        D17B
```

```
                .           V
                .           V
186             .      17BT22
                .           .
                .           .
192             .           .          47
                .           .           .
                .           .           .
207             .           .           .-------->     D47
205             .           .         D47
                .           .           V
                .           .           V
210             .           .      BASIN4
                .           .           V
                .           .           V
222             .           .      RCAP4A
                .           .           V
                .           .           V
231             .           .      RCAP4B
                .           .           V
                .           .           V
239             .           .      RCAP4C
                .           .           V
                .           .           V
247             .           .      RCAP4D
                .           .           .
                .           .           .
255             .           .           .          22
                .           .           .           .
                .           .           .           .
267             .           .           .           .-------->     D22
265             .           .           .         D22
                .           .           .           .
                .           .           .           .
270             .        C22A.......................
                .           V
                .           V
273             .       22T23
                .           .
                .           .
283          C23B............
                V
                V
286         23T24
                .
                .
296             .          24
                .           .
                .           .
308             .           .-------->     D24
306             .         D24
                .           .
                .           .
311          C24A............
                .
                .
314             .          50
                .           .
                .           .
327             .           .-------->     D50
325             .         D50
                .           V
                .           V
330             .        CAP1
                .           V
                .           V
335             .      BASIN1
                .           V
                .           V
345             .       RBAS1
                .           .
                .           .
352             .           .         18c
                .           .           .
                .           .           .
366             .           .           .-------->    D18c
364             .           .        D18c
                .           .           .
                .           .           .
369             .        C18C............
                .           V
```

```
                .           V
373             .       18T24
                .           .
                .           .
380           C24............
                .
                .
387             .-------> DIVBRD
384        BRDHAW
                V
                V
390        RT31B1
                V
                V
400        RT31B2
                V
                V
408        RT31B3
                .
                .
420             .         31B
                .           .
                .           .
432             .           .------->    D31B
430             .        D31B
                .           .
                .           .
435           C31............
                .
                .
445             .------->    D31S
439          D31S
                V
                V
450        31WT32
                .
                .
458             .           .<-------    D31S
456             .        D31S
                .           V
                .           V
459             .      31T381
                .           V
                .           V
471             .      31T382
```

**) RUNOFF ALSO COMPUTED AT THIS LOCATION
****
****

```
                                    *                                                    *
  FLOOD HYDROGRAPH PACKAGE  (HEC-1)  *                                                    *    U.S. ARMY CORPS OF
INEERS     *
                JUL   1997          *                                                    *    HYDROLOGIC ENGINEERING
TER    *
            VERSION 4.1             *                                                    *          609 SECOND STREET
                                    *                                                    *       DAVIS, CALIFORNIA 9561
 RUN DATE   25AUG99  TIME  11:02:00 *                                                    *           (916) 756-1104
                                    *                                                    *
```

****
****

ORIGINAL MODEL FROM THE EAST MESA ADMP
LANDUSE IS OF THE FUTURE CONDITION
SOME ROUTINGS WERE TAKEN FROM THE DIBBLE MODEL(NDIF.DAT) AS PROVIDED FOR THE DRAINAGE IMPROVEMENTS ASSOCIATED WITH THE CAP BASINS AND DOWNSTREAM IMPROVEMENTS WITH THE OUTLETS OF THESE BASINS

100YR-24HR EVENT

SUBBASIN RETENTION VOLUMES ARE BASED UPON THE 100 YEAR 2 HR STORM.THE AMOUNT OF THIS ULTIMATE VOLUME WAS REDUCED TO ACCOUNT FOR THE PORTION OF EACH

```
                    SUBBASIN THAT IS ALREADY DEVELOPED AND DOES NOT HAVE RETENTION FOR THAT
                    DEVELOPMENT. THE AMOUNT WAS FURTHER LOWERED TO ACCOUNT FOR SOME OF THE RUNOFF
                    NOT GETTING INTO RETENTION BASINS

                    FILENAME IS PLANC.DAT

                    DDM MCUHP2 MESA AREA DRAINAGE MASTER PLAN

20 IO          OUTPUT CONTROL VARIABLES
                     IPRNT           5  PRINT CONTROL
                     IPLOT           0  PLOT CONTROL
                     QSCAL          0.  HYDROGRAPH PLOT SCALE

   IT          HYDROGRAPH TIME DATA
                      NMIN           5  MINUTES IN COMPUTATION INTERVAL
                     IDATE      1APR97  STARTING DATE
                     ITIME        0000  STARTING TIME
                        NQ        1000  NUMBER OF HYDROGRAPH ORDINATES
                    NDDATE      4APR97  ENDING DATE
                    NDTIME        1115  ENDING TIME
                     ICENT          19  CENTURY MARK

               COMPUTATION INTERVAL     .08 HOURS
                    TOTAL TIME BASE   83.25 HOURS

        ENGLISH UNITS
             DRAINAGE AREA          SQUARE MILES
             PRECIPITATION DEPTH    INCHES
             LENGTH, ELEVATION      FEET
             FLOW                   CUBIC FEET PER SECOND
             STORAGE VOLUME         ACRE-FEET
             SURFACE AREA           ACRES
             TEMPERATURE            DEGREES FAHRENHEIT

22 JD          INDEX STORM NO. 1
                      STRM        3.60  PRECIPITATION DEPTH
                      TRDA         .01  TRANSPOSITION DRAINAGE AREA

23 PI            PRECIPITATION PATTERN
                    .00       .00       .00       .00       .00       .00       .00       .00       .00       .00
                    .00       .00       .00       .00       .00       .00       .00       .00       .00       .00
                    .00       .00       .00       .00       .00       .00       .00       .00       .00       .00
                    .00       .00       .00       .00       .00       .00       .00       .00       .00       .00
                    .00       .00       .00       .00       .00       .00       .00       .00       .00       .00
                    .00       .00       .00       .00       .00       .00       .00       .00       .00       .00
                    .00       .00       .00       .00       .00       .00       .00       .00       .00       .00
                    .00       .00       .00       .00       .00       .00       .00       .00       .00       .00
                    .00       .00       .00       .00       .00       .00       .00       .00       .00       .00
                    .00       .00       .00       .00       .00       .00       .00       .00       .00       .00
                    .00       .00       .00       .00       .00       .00       .00       .00       .00       .00
                    .00       .00       .00       .00       .00       .00       .00       .00       .00       .00
                    .00       .00       .00       .00       .00       .00       .01       .01       .01       .01
                    .01       .01       .01       .01       .01       .02       .02       .02       .05       .05
                    .05       .07       .07       .07       .01       .01       .01       .01       .01       .01
                    .01       .01       .01       .01       .01       .01       .00       .00       .00       .00
                    .00       .00       .00       .00       .00       .00       .00       .00       .00       .00
                    .00       .00       .00       .00       .00       .00       .00       .00       .00       .00
                    .00       .00       .00       .00       .00       .00       .00       .00       .00       .00
                    .00       .00       .00       .00       .00       .00       .00       .00       .00       .00
                    .00       .00       .00       .00       .00       .00       .00       .00       .00       .00
                    .00       .00       .00       .00       .00       .00       .00       .00       .00       .00
                    .00       .00       .00       .00       .00       .00       .00       .00       .00       .00
                    .00       .00       .00       .00       .00       .00       .00       .00       .00       .00
                    .00       .00       .00       .00       .00       .00       .00       .00       .00       .00
                    .00       .00       .00       .00       .00       .00       .00       .00       .00       .00
                    .00       .00       .00       .00       .00       .00       .00       .00       .00       .00
                    .00       .00       .00       .00       .00       .00       .00       .00       .00       .00
                    .00       .00       .00       .00       .00       .00       .00       .00

33 JD          INDEX STORM NO. 2
                      STRM        3.58  PRECIPITATION DEPTH
                      TRDA        1.00  TRANSPOSITION DRAINAGE AREA

 0 PI            PRECIPITATION PATTERN
                    .00       .00       .00       .00       .00       .00       .00       .00       .00       .00
                    .00       .00       .00       .00       .00       .00       .00       .00       .00       .00
                    .00       .00       .00       .00       .00       .00       .00       .00       .00       .00
                    .00       .00       .00       .00       .00       .00       .00       .00       .00       .00
                    .00       .00       .00       .00       .00       .00       .00       .00       .00       .00
                    .00       .00       .00       .00       .00       .00       .00       .00       .00       .00
                    .00       .00       .00       .00       .00       .00       .00       .00       .00       .00
```

.00	.00	.00	.00	.00	.00	.00	.00	.00	.00
.00	.00	.00	.00	.00	.00	.00	.00	.00	.00
.00	.00	.00	.00	.00	.00	.00	.00	.00	.00
.00	.00	.00	.00	.00	.00	.00	.00	.00	.00
.00	.00	.00	.00	.00	.00	.00	.00	.00	.00
.00	.00	.00	.00	.00	.00	.01	.01	.01	.01
.01	.01	.01	.01	.01	.02	.02	.02	.05	.05
.05	.07	.07	.07	.01	.01	.01	.01	.01	.01
.01	.01	.01	.01	.01	.01	.00	.00	.00	.00
.00	.00	.00	.00	.00	.00	.00	.00	.00	.00
.00	.00	.00	.00	.00	.00	.00	.00	.00	.00
.00	.00	.00	.00	.00	.00	.00	.00	.00	.00
.00	.00	.00	.00	.00	.00	.00	.00	.00	.00
.00	.00	.00	.00	.00	.00	.00	.00	.00	.00
.00	.00	.00	.00	.00	.00	.00	.00	.00	.00
.00	.00	.00	.00	.00	.00	.00	.00	.00	.00
.00	.00	.00	.00	.00	.00	.00	.00	.00	.00
.00	.00	.00	.00	.00	.00	.00	.00	.00	.00
.00	.00	.00	.00	.00	.00	.00	.00	.00	.00
.00	.00	.00	.00	.00	.00	.00	.00	.00	.00
.00	.00	.00	.00	.00	.00	.00	.00		

34 JD INDEX STORM NO. 3

STRM 3.49 PRECIPITATION DEPTH

TRDA 5.00 TRANSPOSITION DRAINAGE AREA

0 PI PRECIPITATION PATTERN

.00	.00	.00	.00	.00	.00	.00	.00	.00	.00
.00	.00	.00	.00	.00	.00	.00	.00	.00	.00
.00	.00	.00	.00	.00	.00	.00	.00	.00	.00
.00	.00	.00	.00	.00	.00	.00	.00	.00	.00
.00	.00	.00	.00	.00	.00	.00	.00	.00	.00
.00	.00	.00	.00	.00	.00	.00	.00	.00	.00
.00	.00	.00	.00	.00	.00	.00	.00	.00	.00
.00	.00	.00	.00	.00	.00	.00	.00	.00	.00
.00	.00	.00	.00	.00	.00	.00	.00	.00	.00
.00	.00	.00	.00	.00	.00	.00	.00	.00	.00
.00	.00	.00	.00	.00	.00	.00	.00	.00	.00
.00	.00	.00	.00	.00	.00	.00	.00	.00	.00
.00	.00	.00	.00	.00	.00	.01	.01	.01	.01
.01	.01	.01	.01	.01	.02	.02	.02	.05	.05
.05	.07	.07	.07	.01	.01	.01	.01	.01	.01
.01	.01	.01	.01	.01	.01	.00	.00	.00	.00
.00	.00	.00	.00	.00	.00	.00	.00	.00	.00
.00	.00	.00	.00	.00	.00	.00	.00	.00	.00
.00	.00	.00	.00	.00	.00	.00	.00	.00	.00
.00	.00	.00	.00	.00	.00	.00	.00	.00	.00
.00	.00	.00	.00	.00	.00	.00	.00	.00	.00
.00	.00	.00	.00	.00	.00	.00	.00	.00	.00
.00	.00	.00	.00	.00	.00	.00	.00	.00	.00
.00	.00	.00	.00	.00	.00	.00	.00	.00	.00
.00	.00	.00	.00	.00	.00	.00	.00	.00	.00
.00	.00	.00	.00	.00	.00	.00	.00	.00	.00
.00	.00	.00	.00	.00	.00	.00	.00	.00	.00
.00	.00	.00	.00	.00	.00	.00	.00		

35 JD INDEX STORM NO. 4

STRM 3.38 PRECIPITATION DEPTH

TRDA 10.00 TRANSPOSITION DRAINAGE AREA

0 PI PRECIPITATION PATTERN

.00	.00	.00	.00	.00	.00	.00	.00	.00	.00
.00	.00	.00	.00	.00	.00	.00	.00	.00	.00
.00	.00	.00	.00	.00	.00	.00	.00	.00	.00
.00	.00	.00	.00	.00	.00	.00	.00	.00	.00
.00	.00	.00	.00	.00	.00	.00	.00	.00	.00
.00	.00	.00	.00	.00	.00	.00	.00	.00	.00
.00	.00	.00	.00	.00	.00	.00	.00	.00	.00
.00	.00	.00	.00	.00	.00	.00	.00	.00	.00
.00	.00	.00	.00	.00	.00	.00	.00	.00	.00
.00	.00	.00	.00	.00	.00	.00	.00	.00	.00
.00	.00	.00	.00	.00	.00	.00	.00	.00	.00
.00	.00	.00	.00	.00	.00	.00	.00	.00	.00
.00	.00	.00	.00	.00	.00	.01	.01	.01	.01
.01	.01	.01	.01	.01	.02	.02	.02	.05	.05
.05	.07	.07	.07	.01	.01	.01	.01	.01	.01
.01	.01	.01	.01	.01	.01	.00	.00	.00	.00
.00	.00	.00	.00	.00	.00	.00	.00	.00	.00
.00	.00	.00	.00	.00	.00	.00	.00	.00	.00
.00	.00	.00	.00	.00	.00	.00	.00	.00	.00
.00	.00	.00	.00	.00	.00	.00	.00	.00	.00
.00	.00	.00	.00	.00	.00	.00	.00	.00	.00
.00	.00	.00	.00	.00	.00	.00	.00	.00	.00
.00	.00	.00	.00	.00	.00	.00	.00	.00	.00
.00	.00	.00	.00	.00	.00	.00	.00	.00	.00
.00	.00	.00	.00	.00	.00	.00	.00	.00	.00
.00	.00	.00	.00	.00	.00	.00	.00	.00	.00
.00	.00	.00	.00	.00	.00	.00	.00	.00	.00

```
                .00       .00       .00       .00       .00       .00       .00       .00       .00       .00
                .00       .00       .00       .00       .00       .00       .00       .00       .00       .00
                .00       .00       .00       .00       .00       .00       .00       .00       .00       .00
                .00       .00       .00       .00       .00       .00       .00       .00       .00       .00
                .00       .00       .00       .00       .00       .00       .00       .00       .00       .00
                .00       .00       .00       .00       .00       .00       .00       .00       .00       .00
                .00       .00       .00       .00       .00       .00       .00       .00       .00       .00
                .00       .00       .00       .00       .00       .00       .00       .00       .00       .00
                .00       .00       .00       .00       .00       .00       .00       .00       .00       .00
                .00       .00       .00       .00       .00       .00       .00       .00       .00       .00
                .00       .00       .00       .00       .00       .00       .00       .00

36 JD        INDEX STORM NO. 5
                 STRM        3.27  PRECIPITATION DEPTH
                 TRDA       20.00  TRANSPOSITION DRAINAGE AREA

 0 PI          PRECIPITATION PATTERN
                .00       .00       .00       .00       .00       .00       .00       .00       .00       .00
                .00       .00       .00       .00       .00       .00       .00       .00       .00       .00
                .00       .00       .00       .00       .00       .00       .00       .00       .00       .00
                .00       .00       .00       .00       .00       .00       .00       .00       .00       .00
                .00       .00       .00       .00       .00       .00       .00       .00       .00       .00
                .00       .00       .00       .00       .00       .00       .00       .00       .00       .00
                .00       .00       .00       .00       .00       .00       .00       .00       .00       .00
                .00       .00       .00       .00       .00       .00       .00       .00       .00       .00
                .00       .00       .00       .00       .00       .00       .00       .00       .00       .00
                .00       .00       .00       .00       .00       .00       .00       .00       .00       .00
                .00       .00       .00       .00       .00       .00       .00       .00       .00       .00
                .00       .00       .00       .00       .00       .00       .01       .01       .01       .01
                .01       .01       .01       .01       .01       .02       .02       .02       .05       .05
                .05       .07       .07       .07       .01       .01       .01       .01       .01       .01
                .01       .01       .01       .01       .01       .01       .00       .00       .00       .00
                .00       .00       .00       .00       .00       .00       .00       .00       .00       .00
                .00       .00       .00       .00       .00       .00       .00       .00       .00       .00
                .00       .00       .00       .00       .00       .00       .00       .00       .00       .00
                .00       .00       .00       .00       .00       .00       .00       .00       .00       .00
                .00       .00       .00       .00       .00       .00       .00       .00       .00       .00
                .00       .00       .00       .00       .00       .00       .00       .00       .00       .00
                .00       .00       .00       .00       .00       .00       .00       .00       .00       .00
                .00       .00       .00       .00       .00       .00       .00       .00       .00       .00
                .00       .00       .00       .00       .00       .00       .00       .00       .00       .00
                .00       .00       .00       .00       .00       .00       .00       .00       .00       .00
                .00       .00       .00       .00       .00       .00       .00       .00       .00       .00
 -----DSS---ZOPEN:  Existing File Opened,  File: PLANC.DSS
                   Unit:  71;  DSS Version: 6-JG
---DSS---ZWRITE Unit  71; Vers.    3:  /HAWES RD @ BROADWAY RD/HAWES CHANNEL PROJECT/FLOW/31MAR1997/5MIN/HYDROGRAPH/
---DSS---ZWRITE Unit  71; Vers.    3:  /HAWES RD @ BROADWAY RD/HAWES CHANNEL PROJECT/FLOW/01APR1997/5MIN/HYDROGRAPH/
---DSS---ZWRITE Unit  71; Vers.    3:  /HAWES RD @ BROADWAY RD/HAWES CHANNEL PROJECT/FLOW/02APR1997/5MIN/HYDROGRAPH/
---DSS---ZWRITE Unit  71; Vers.    3:  /HAWES RD @ BROADWAY RD/HAWES CHANNEL PROJECT/FLOW/03APR1997/5MIN/HYDROGRAPH/
---DSS---ZWRITE Unit  71; Vers.    3:  /HAWES RD @ BROADWAY RD/HAWES CHANNEL PROJECT/FLOW/04APR1997/5MIN/HYDROGRAPH/


* *** *** *** *** *** *** *** *** *** *** *** *** *** *** *** *** *** *** *** *** *** *** *** *** *** *** *** *** *** *** **
 ***


         **************
         *            *
90 KK    *    RT31B1  *
         *            *
         **************

94 KO        OUTPUT CONTROL VARIABLES
               IPRNT           5  PRINT CONTROL
               IPLOT           0  PLOT CONTROL
               QSCAL          0.  HYDROGRAPH PLOT SCALE
               IPNCH           0  PUNCH COMPUTED HYDROGRAPH
                IOUT          21  SAVE HYDROGRAPH ON THIS UNIT
               ISAV1           1  FIRST ORDINATE PUNCHED OR SAVED
               ISAV2        1000  LAST ORDINATE PUNCHED OR SAVED
              TIMINT       1.000  TIME INTERVAL IN HOURS

---DSS---ZWRITE Unit  71; Vers.    3:  /FLOW AFTER 360 CFS DIVERT TO WES/HAWES CHANNEL PROJECT/FLOW/31MAR1997/5MIN/HYD/
---DSS---ZWRITE Unit  71; Vers.    3:  /FLOW AFTER 360 CFS DIVERT TO WES/HAWES CHANNEL PROJECT/FLOW/01APR1997/5MIN/HYD/
---DSS---ZWRITE Unit  71; Vers.    3:  /FLOW AFTER 360 CFS DIVERT TO WES/HAWES CHANNEL PROJECT/FLOW/02APR1997/5MIN/HYD/
---DSS---ZWRITE Unit  71; Vers.    3:  /FLOW AFTER 360 CFS DIVERT TO WES/HAWES CHANNEL PROJECT/FLOW/03APR1997/5MIN/HYD/
---DSS---ZWRITE Unit  71; Vers.    3:  /FLOW AFTER 360 CFS DIVERT TO WES/HAWES CHANNEL PROJECT/FLOW/04APR1997/5MIN/HYD/
```

```
---DSS---ZWRITE Unit  71; Vers.    3:  /FLOW SOUTHERN AND HAWES BEFORE S/HAWES CHANNEL PROJ/FLOW/31MAR1997/5MIN/HYDR/
---DSS---ZWRITE Unit  71; Vers.    3:  /FLOW SOUTHERN AND HAWES BEFORE S/HAWES CHANNEL PROJ/FLOW/01APR1997/5MIN/HYDR/
---DSS---ZWRITE Unit  71; Vers.    3:  /FLOW SOUTHERN AND HAWES BEFORE S/HAWES CHANNEL PROJ/FLOW/02APR1997/5MIN/HYDR/
---DSS---ZWRITE Unit  71; Vers.    3:  /FLOW SOUTHERN AND HAWES BEFORE S/HAWES CHANNEL PROJ/FLOW/03APR1997/5MIN/HYDR/
---DSS---ZWRITE Unit  71; Vers.    3:  /FLOW SOUTHERN AND HAWES BEFORE S/HAWES CHANNEL PROJ/FLOW/04APR1997/5MIN/HYDR/
```

RUNOFF SUMMARY
FLOW IN CUBIC FEET PER SECOND
TIME IN HOURS, AREA IN SQUARE MILES

OPERATION	STATION	PEAK FLOW	TIME OF PEAK	AVERAGE FLOW FOR MAXIMUM PERIOD 6-HOUR	24-HOUR	72-HOUR	BASIN AREA	MAXIMUM STAGE	TIME O MAX GE
HYDROGRAPH AT	48	543.	12.50	96.	29.	10.	.77		
DIVERSION TO	D48	535.	12.42	51.	14.	5.	.77		
HYDROGRAPH AT	D48	520.	12.58	53.	15.	5.	.77		
ROUTED TO	CAP3	476.	12.67	53.	15.	5.	.77		
ROUTED TO	BASIN3	67.	13.42	52.	15.	5.	.77		
ROUTED TO	RCAP3	67.	13.42	52.	15.	5.	.77		
HYDROGRAPH AT	49	555.	12.50	100.	30.	10.	.79		
DIVERSION TO	D49	505.	12.33	49.	14.	5.	.79		
HYDROGRAPH AT	D49	555.	12.50	60.	17.	6.	.79		
ROUTED TO	CAP2	530.	12.58	60.	17.	6.	.79		
ROUTED TO	BASIN2	52.	13.58	48.	17.	6.	.79		
ROUTED TO	RCAP2B	52.	13.58	48.	17.	6.	.79		
HYDROGRAPH AT	17A	158.	12.42	30.	10.	3.	.18		
DIVERSION TO	D17A	26.	11.75	6.	2.	1.	.18		
HYDROGRAPH AT	D17A	158.	12.42	28.	8.	3.	.18		
2 COMBINED AT	C17A1	186.	12.50	71.	24.	8.	.97		
2 COMBINED AT	C17A2	206.	12.58	118.	38.	13.	1.74		
ROUTED TO	AT23B	207.	12.58	118.	38.	13.	1.74		
ROUTED TO	AT23A	181.	12.75	117.	38.	13.	1.74		
HYDROGRAPH AT	23	322.	12.08	45.	15.	5.	.28		
DIVERSION TO	D23	187.	11.92	17.	5.	2.	.28		
HYDROGRAPH AT	D23	322.	12.08	34.	9.	3.	.28		

2 COMBINED AT						
C23A	368.	12.17	147.	47.	16.	2.02
HYDROGRAPH AT						
17B	211.	12.42	42.	14.	5.	.22
DIVERSION TO						
D17B	17.	11.17	7.	3.	1.	.22
HYDROGRAPH AT						
D17B	211.	12.42	40.	11.	4.	.22
ROUTED TO						
17BT22	210.	12.42	40.	11.	4.	.22
HYDROGRAPH AT						
47	802.	12.92	189.	55.	18.	1.67
DIVERSION TO						
D47	802.	12.92	128.	34.	11.	1.67
HYDROGRAPH AT						
D47	546.	13.25	75.	21.	7.	1.67
ROUTED TO						
BASIN4	119.	14.08	75.	21.	7.	1.67
ROUTED TO						
RCAP4A	118.	14.25	75.	21.	7.	1.67
ROUTED TO						
RCAP4B	118.	14.25	75.	21.	7.	1.67
ROUTED TO						
RCAP4C	117.	14.50	74.	21.	7.	1.67
ROUTED TO						
RCAP4D	117.	14.58	74.	21.	7.	1.67
HYDROGRAPH AT						
22	477.	12.17	73.	24.	8.	.41
DIVERSION TO						
D22	71.	11.58	17.	6.	2.	.41
HYDROGRAPH AT						
D22	477.	12.17	67.	19.	6.	.41
3 COMBINED AT						
C22A	629.	12.25	169.	50.	17.	2.30
ROUTED TO						
22T23	624.	12.25	168.	50.	17.	2.30
2 COMBINED AT						
C23B	970.	12.25	306.	94.	32.	4.32
ROUTED TO						
23T24	930.	12.33	305.	94.	32.	4.32
HYDROGRAPH AT						
24	299.	12.25	48.	15.	5.	.29
DIVERSION TO						
D24	5.	6.58	4.	1.	0.	.29
HYDROGRAPH AT						
D24	299.	12.25	48.	14.	5.	.29
2 COMBINED AT						
C24A	1202.	12.33	344.	108.	36.	4.61
HYDROGRAPH AT						
50	255.	12.33	45.	15.	5.	.28
DIVERSION TO						
D50	227.	12.17	23.	7.	2.	.28
HYDROGRAPH AT						
D50	255.	12.33	29.	8.	3.	.28

ROUTED TO	CAP1	262.	12.42	29.	11.	7.	.28
ROUTED TO	BASIN1	35.	13.17	28.	11.	7.	.28
ROUTED TO	RBAS1	35.	13.92	28.	11.	7.	.28
HYDROGRAPH AT	18c	438.	12.42	83.	27.	9.	.50
DIVERSION TO	D18c	367.	12.17	34.	10.	3.	.50
HYDROGRAPH AT	D18c	438.	12.42	60.	17.	6.	.50
2 COMBINED AT	C18C	443.	12.42	88.	28.	13.	.78
ROUTED TO	18T24	417.	12.50	86.	28.	13.	.78
2 COMBINED AT	C24	1435.	12.42	421.	133.	48.	5.39
DIVERSION TO	DIVBRD	0.	.00	0.	0.	0.	5.39
HYDROGRAPH AT	BRDHAW	1435.	12.42	421.	133.	48.	5.39
ROUTED TO	RT31B1	1428.	12.42	421.	133.	48.	5.39
ROUTED TO	RT31B2	1402.	12.50	420.	133.	48.	5.39
ROUTED TO	RT31B3	1399.	12.50	420.	133.	48.	5.39
HYDROGRAPH AT	31B	455.	12.33	74.	23.	8.	.47
DIVERSION TO	D31B	449.	12.25	41.	12.	4.	.47
HYDROGRAPH AT	D31B	453.	12.33	42.	12.	4.	.47
2 COMBINED AT	C31	1726.	12.42	454.	143.	51.	5.86
DIVERSION TO	D31S	703.	12.42	113.	28.	9.	5.86
HYDROGRAPH AT	D31S	1023.	12.42	341.	115.	42.	5.86
ROUTED TO	31WT32	842.	12.67	334.	115.	42.	5.86
HYDROGRAPH AT	D31S	703.	12.42	113.	28.	9.	5.86
ROUTED TO	31T381	706.	12.50	113.	28.	9.	5.86
ROUTED TO	31T382	706.	12.50	113.	28.	9.	5.86

SUMMARY OF KINEMATIC WAVE - MUSKINGUM-CUNGE ROUTING
(FLOW IS DIRECT RUNOFF WITHOUT BASE FLOW)

						INTERPOLATED TO COMPUTATION INTERVAL			
ISTAQ	ELEMENT	DT	PEAK	TIME TO PEAK	VOLUME	DT	PEAK	TIME TO PEAK	VOLUME
		(MIN)	(CFS)	(MIN)	(IN)	(MIN)	(CFS)	(MIN)	(IN)

```
        FOR STORM = 1  STORM AREA (SQ MI) =        .01
           RCAP3  MANE          .57     68.82    805.85       .72      5.00     68.78    805.00         .72

NTINUITY SUMMARY (AC-FT) - INFLOW= .2948E+02 EXCESS= .0000E+00 OUTFLOW= .2948E+02 BASIN STORAGE= .7073E-13 PERCENT ERROR


        FOR STORM = 2  STORM AREA (SQ MI) =       1.00
           RCAP3  MANE          .49     67.18    806.03       .71      5.00     67.17    805.00         .71

NTINUITY SUMMARY (AC-FT) - INFLOW= .2902E+02 EXCESS= .0000E+00 OUTFLOW= .2901E+02 BASIN STORAGE= .6993E-13 PERCENT ERROR


        FOR STORM = 3  STORM AREA (SQ MI) =       5.00
           RCAP3  MANE          .48     65.08    805.95       .66      5.00     65.07    805.00         .66

NTINUITY SUMMARY (AC-FT) - INFLOW= .2697E+02 EXCESS= .0000E+00 OUTFLOW= .2696E+02 BASIN STORAGE= .7082E-13 PERCENT ERROR


        FOR STORM = 4  STORM AREA (SQ MI) =      10.00
           RCAP3  MANE          .64     61.84    805.88       .60      5.00     61.83    805.00         .60

NTINUITY SUMMARY (AC-FT) - INFLOW= .2446E+02 EXCESS= .0000E+00 OUTFLOW= .2446E+02 BASIN STORAGE= .7091E-13 PERCENT ERROR


        FOR STORM = 5  STORM AREA (SQ MI) =      20.00
           RCAP3  MANE          .63     58.74    806.20       .53      5.00     58.74    805.00         .53

NTINUITY SUMMARY (AC-FT) - INFLOW= .2195E+02 EXCESS= .0000E+00 OUTFLOW= .2195E+02 BASIN STORAGE= .6962E-13 PERCENT ERROR



* NORMAL END OF HEC-1 ***


 -----DSS---ZCLOSE Unit:  71,   File: PLANC.DSS
            Pointer Utilization:   .25
            Number of Records:     20
            File Size:     46.9  Kbytes
            Percent Inactive:    .0
```

PLAN D

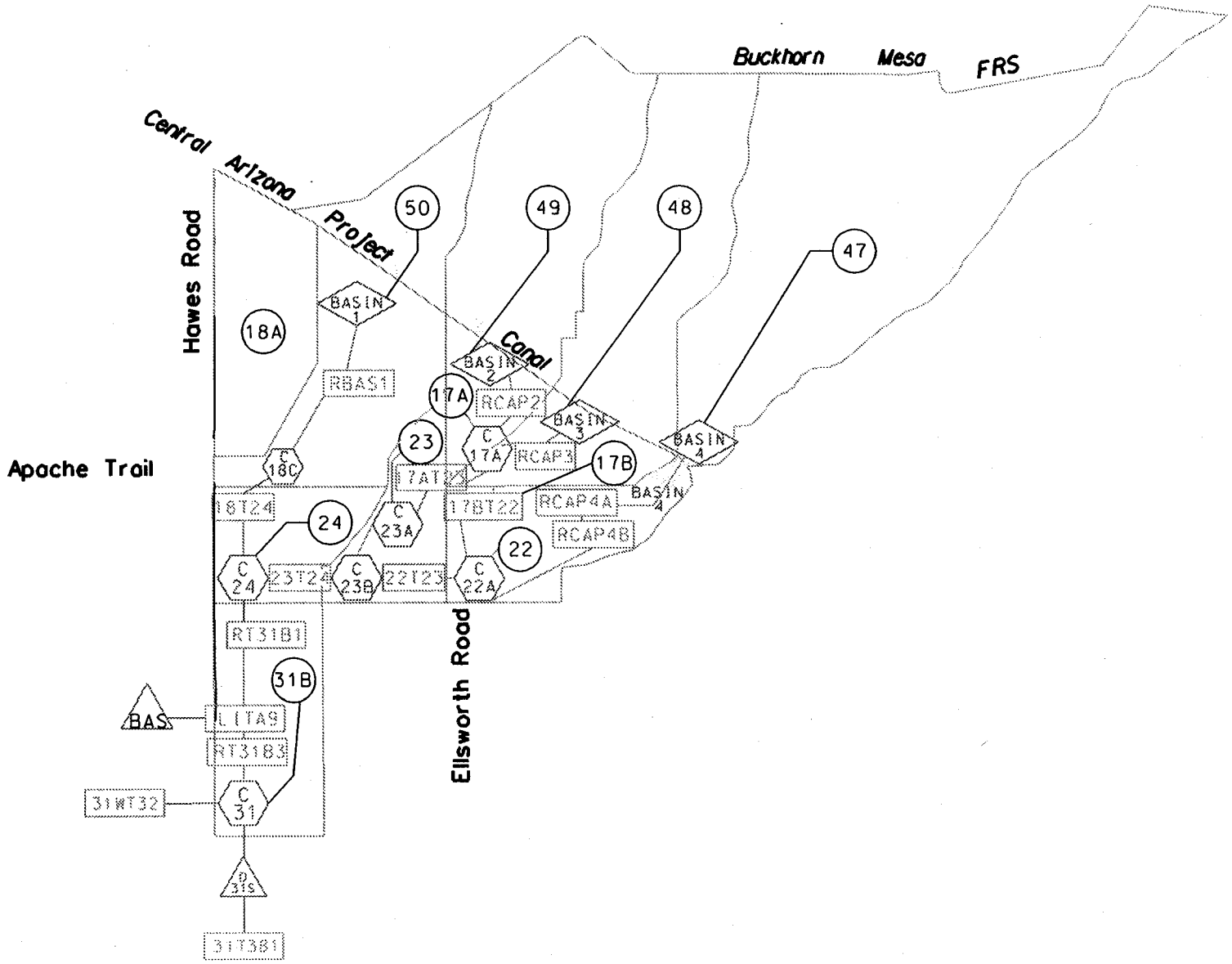
Buckhorn Mesa FRS
Central Arizona Project Canal
Hawes Road
Apache Trail
Ellsworth Road
50
49
48
47
18A
17A
23
17B
24
22
31B
BASIN 1
BASIN 2
BASIN 3
BASIN 4
RBAS1
RCAP2
RCAP3
RCAP4A
RCAP4B
C 18C
C 17A
C 23A
C 24
C 23B
C 22A
18T24
17AT23
17BT22
23T24
22T23
RT31B1
LITA9
RT31B3
31WT32
BAS
D 31S
31T38

```
****************************************
************************************
                                    *                                                    *
  FLOOD HYDROGRAPH PACKAGE  (HEC-1)  *                                                    *    U.S. ARMY CORPS OF
INEERS     *
              JUL   1997            *                                                    *    HYDROLOGIC ENGINEERING
TER    *
          VERSION 4.1               *                                                    *          609 SECOND STREET
                                    *                                                    *       DAVIS, CALIFORNIA 9561
 RUN DATE   25AUG99  TIME  11:04:09 *                                                    *           (916) 756-1104
                                    *                                                    *
****************************************
************************************
```

```
X     X  XXXXXXX   XXXXX          X
X     X  X        X     X        XX
X     X  X        X               X
XXXXXXX  XXXX     X        XXXXX  X
X     X  X        X               X
X     X  X        X     X         X
X     X  XXXXXXX   XXXXX         XXX
```

THIS PROGRAM REPLACES ALL PREVIOUS VERSIONS OF HEC-1 KNOWN AS HEC1 (JAN 73), HEC1GS, HEC1DB, AND HEC1KW.

THE DEFINITIONS OF VARIABLES -RTIMP- AND -RTIOR- HAVE CHANGED FROM THOSE USED WITH THE 1973-STYLE INPUT
UCTURE.

THE DEFINITION OF -AMSKK- ON RM-CARD WAS CHANGED WITH REVISIONS DATED 28 SEP 81. THIS IS THE FORTRAN77 VERSION
NEW OPTIONS: DAMBREAK OUTFLOW SUBMERGENCE , SINGLE EVENT DAMAGE CALCULATION, DSS:WRITE STAGE FREQUENCY,
DSS:READ TIME SERIES AT DESIRED CALCULATION INTERVAL LOSS RATE:GREEN AND AMPT INFILTRATION
KINEMATIC WAVE: NEW FINITE DIFFERENCE ALGORITHM

HEC-1 INPUT PAGE 1

```
LINE          ID.......1.......2.......3.......4.......5.......6.......7.......8.......9......10

  1           ID
  2           ID   ORIGINAL MODEL FROM THE EAST MESA ADMP
  3           ID   LANDUSE IS OF THE FUTURE CONDITION
  4           ID   SOME ROUTINGS WERE TAKEN FROM THE DIBBLE MODEL(NDIF.DAT) AS PROVIDED FOR THE
  5           ID   DRAINAGE IMPROVEMENTS ASSOCIATED WITH THE CAP BASINS AND DOWNSTREAM IMPROVE-
  6           ID   MENTS WITH THE OUTLETS OF THESE BASINS
  7           ID
  8           ID   100YR-24HR EVENT
  9           ID
 10           ID   SUBBASIN RETENTION VOLUMES ARE BASED UPON THE 100 YEAR 2 HR STORM.THE AMOUNT
 11           ID   OF THIS ULTIMATE VOLUME WAS REDUCED TO ACCOUNT FOR THE PORTION OF EACH
 12           ID   SUBBASIN THAT IS ALREADY DEVELOPED AND DOES NOT HAVE RETENTION FOR THAT
 13           ID   DEVELOPMENT. THE AMOUNT WAS FURTHER LOWERED TO ACCOUNT FOR SOME OF THE RUNOFF
 14           ID   NOT GETTING INTO RETENTION BASINS
 15           ID
 16           ID   THIS MODEL IS BASED UPON THE CONCEPT OF PROVIDING A WEIR AT THE EMELITA BASIN
 17           ID   WHICH LETS 800 CFS CONTINUE TO GO DOWN THE CHANNEL TOWARD SOUTHERN AVE.
 18           ID   ANYTHING ABOVE 800 CFS GOES INTO THE DETENTION BASIN
 19           ID   THIS IS MODELED IN THE KK RECORD CALLED "LITA"
 20           ID
 21           ID   FILENAME IS PLAND.DAT
 22           ID
 23           ID   DDM MCUHP2 MESA AREA DRAINAGE MASTER PLAN
              *DIAGRAM
 24           IT       5  1APR97    0000    1000
 25           IO       5
 26           IN      15
              *
 27           JD    3.60    0.01
 28           PC    .000    .002    .005    .008    .011    .014    .017    .020    .023    .026
 29           PC    .029    .032    .035    .038    .041    .044    .048    .052    .056    .060
 30           PC    .064    .068    .072    .076    .080    .085    .090    .095    .100    .105
 31           PC    .110    .115    .120    .126    .135    .142    .150    .158    .166    .175
```

```
 32          PC    .184    .195    .208    .224    .243    .266    .318    .479    .678    .716
 33          PC    .743    .764    .781    .795    .808    .818    .828    .837    .844    .851
 34          PC    .858    .865    .871    .877    .883    .889    .895    .900    .905    .910
 35          PC    .915    .919    .923    .927    .931    .935    .939    .943    .947    .951
 36          PC    .954    .957    .960    .963    .966    .969    .972    .975    .978    .981
 37          PC    .984    .987    .990    .993    .996    .999   1.000
 38          JD    3.58       1
 39          JD    3.49       5
 40          JD    3.38    10.0
 41          JD    3.27    20.0
             * JD  3.24    30.0
             * JD  3.10    60.0
             * JD  3.05    90.0
             * DDM   ***** Updated *****

 42          KK      48
 43          KM   BASIN 48
 44          KM    THE FOLLOWING PARAMETERS WERE PROVIDED FOR THIS BASIN
 45          KM    L=      1.6  Lca=       .8   S=   80.2  Kn= .060  LAG=  41.6
 46          KM    PHOENIX VALLEY S-GRAPH WAS USED FOR THIS BASIN
 47          BA     .77
 48          LG     .27     .25    4.10     .54   22.00
                                     HEC-1 INPUT                                                PAGE  2

LINE         ID.......1.......2.......3.......4.......5.......6.......7.......8.......9......10

 49          UI     62.     75.    223.    304.    360.    431.    532.    752.    705.    560.
 50          UI    472.    387.    317.    240.    141.    107.     90.     62.     45.     19.
 51          UI     19.     19.     19.     19.      0.      0.      0.      0.      0.      0.
 52          UI      0.      0.      0.      0.      0.      0.      0.      0.      0.      0.
             *

 53          KK     D48
 54          KM    RETAIN 100 YEAR 2 HOUR, (48% FOR FUTURE DEVELOPMENT)
 55          DT     D48      28
 56          DI       0   10000
 57          DQ       0   10000
             *
             * DDM   ***** Preserved *****

 58          KK    CAP3
 59          RS       1    FLOW      -1
 60          SV       0   0.934   1.222   4.303   13.13
 61          SE  1564.6  1567.5    1568    1570    1572
 62          SQ       0       0     143     750    1530
             *
             * *******FOLLOWING ADDED FOR ADMP**************

 63          KK  BASIN3
             * KO     1       2
 64          KM        NEW DETENTION BASIN LOCATED DOWNSTREAM FROM CAP3
 65          KM        WITH 30-INCH OUTFALL    BASIN AE2B (BASIN 3)
 66          RS       1    STOR      -1
 67          SV       0       0       0     .85    3.27    6.44   10.21   14.45   31.29
 68          SE    1555    1556    1557    1558    1559    1560    1561    1562    1565
 69          SQ       0       6      18      24      30      36      42      48      54    67.5
 70          SQ     107     149     205     455
 71          SE  1555.0  1556.3  1557.1  1557.5  1557.9  1558.4  1559.0  1559.6  1560.4  1562.3
 72          SE  1562.8  1563.1  1563.3  1564.1
             *
             *  REACH C3-1
             *  520' FEET OF EXISTING CHANNEL NOT MODELED DUE TO SHORT ROUTING LENGTH
             *

 73          KK   RCAP3
 74          KM   REACH C3C-1
 75          KM   ROUTE BASIN 3 FLOW IN CONC. PIPE TO INTERSECTION OF ELLSWORTH & APACHE
 76          KM   THROUGH A 48-INCH PIPE
 77          RK    1500  0.0127   0.012            CIRC       4
             *
             * DDM   ***** Updated *****

 78          KK      49
 79          KM   BASIN 49
 80          KM    THE FOLLOWING PARAMETERS WERE PROVIDED FOR THIS BASIN
 81          KM    L=      1.6  Lca=       .8   S=   73.6  Kn= .060  LAG=  42.6
 82          KM    PHOENIX VALLEY S-GRAPH WAS USED FOR THIS BASIN
 83          BA     .79
 84          LG     .27     .25    4.15     .53   23.00
 85          UI     62.     68.    220.    296.    354.    420.    509.    709.    747.    583.
 86          UI    493.    406.    335.    271.    171.    110.    102.     66.     62.     21.
```

```
LINE          ID.......1.......2.......3.......4.......5.......6.......7.......8.......9......10

  87          UI     19.     19.     19.     19.     19.      0.      0.      0.      0.      0.
  88          UI      0.      0.      0.      0.      0.      0.      0.      0.      0.      0.
              *

  89          KK     D49
  90          KM    RETAIN 100 YEAR 2 HOUR, (54% FOR FUTURE DEVELOPMENT)
  91          DT     D49      27
  92          DI       0   10000
  93          DQ       0   10000
              * DDM   ***** Preserved *****

  94          KK    CAP2
  95          RS       1    FLOW      -1
  96          SV       0    0.02   0.538   2.545  13.729
  97          SE  1565.1    1566    1568    1570    1572
  98          SQ       0      60     340     807    1395
              *
              * *******FOLLOWING ADDED FOR ADMP********

  99          KK  BASIN2
              * KO     1       2
 100          KM        NEW DETENTION BASIN LOCATED DOWNSTREAM FROM CAP2
 101          KM        WITH 30-INCH OUTFALL      (EH1B)
 102          RS       1    STOR
 103          SV       0     .05     .62    1.99    4.97   10.20   16.71   20.19   23.76
 104          SE    1550    1551    1552    1553    1554    1555    1556  1556.5    1557
 105          SQ       0      10      20      30      40      50      58
 106          SE    1549  1550.0  1550.0  1552.3  1553.4  1555.9  1558.1
              *

 107          KK  RCAP2B
 108          KM   REACH C2-1
 109          KM   ROUTE RCAP2A THROUGH CONCRETE CHANNEL
 110          KM    TO CAP BASIN 3 OUTLET CHANNEL (NEAR ELLSWORTH ROAD AND APACHE TRAIL)
 111          RS       1    FLOW      -1
 112          RC   0.025   0.015   0.025     850  0.0071
 113          RX       0     1.5     5.5    11.6    15.6    21.8    24.8      27
 114          RY     5.2     5.1     4.1       0       0     4.1     5.1     5.2
              *
              * DDM   ***** Updated *****

 115          KK     17A
 116          KM   BASIN 17A
 117          KM    THE FOLLOWING PARAMETERS WERE PROVIDED FOR THIS BASIN
 118          KM    L=       .7  Lca=       .5   S=   60.6  Kn= .084  LAG=  36.9
 119          KM    PHOENIX VALLEY S-GRAPH WAS USED FOR THIS BASIN
 120          BA     .18
 121          LG     .23     .24    4.00     .56   43.00
 122          UI     16.     28.     65.     86.    104.    130.    187.    189.    145.    119.
 123          UI     95.     75.     47.     29.     25.     16.     11.      5.      5.      5.
 124          UI      5.      5.      0.      0.      0.      0.      0.      0.      0.      0.
 125          UI      0.      0.      0.      0.      0.      0.      0.      0.      0.      0.
              *
```



```
LINE          ID.......1.......2.......3.......4.......5.......6.......7.......8.......9......10

 126          KK    D17A
 127          KM    RETAIN 100 YEAR 2 HOUR, (29% FOR FUTURE DEVELOPMENT)
 128          DT    D17A       4
 129          DI       0   10000
 130          DQ       0   10000
              *

 131          KK   C17A1
 132          KM
 133          HC       2
              *

 134          KK   C17A2
 135          KM
 136          HC       2
              *

 137          KK   AT23B
 138          KM   REACH AE-4, AE-5
```

```
139          KM   PART 1 OF 2
140          KM   ROUTE FROM CONFLUENCE OF CAP BASIN 2 CHANNEL WITH CAP BASIN 3,
141          KM     WHICH IS 0.06 MILES NORTH OF APACHE TRAIL, TO APACHE TRAIL,
142          KM     ABOUT 0.1 MILES EAST OF ELLSWORTH ROAD
143          RS       1    FLOW      -1
144          RC    .025    .015    .025     570   .0021
145          RX       0      12      16      24      28      36      40      52
146          RY       5     4.9     3.9       0       0     3.9     4.9       5
             *
             -
147          KK   AT23A
148          KM   REACH AE-1, AE-2, AE-3
149          KM   PART 2 OF 2
150          KM   ROUTE FROM 0.1 MILES EAST OF ELLSWORTH ROAD ON APACHE TRAIL TO
151          KM     BROADWAY ROAD 0.125 MILES WEST OF 90th STREET (OR 0.625 MILES
152          KM     WEST OF ELLSWORTH ROAD)
153          RS       1    FLOW      -1
154          RC   0.025   0.025   0.025    3820  0.0029
155          RX       0     2.9     6.9    22.5    37.5    51.5    57.1      60
156          RY       5     4.9     3.9       0       0     3.9     4.9       5
             *
             * DDM   ***** Updated *****

157          KK      23
158          KM   BASIN 23
159          KM    THE FOLLOWING PARAMETERS WERE PROVIDED FOR THIS BASIN
160          KM    L=       1.0  Lca=       .3   S=   65.0  Kn= .047  LAG=  20.1
161          KM    PHOENIX VALLEY S-GRAPH WAS USED FOR THIS BASIN
162          BA     .28
163          LG     .22     .25    4.00     .58   42.00
164          UI     55.    201.    304.    505.    440.    297.    180.     79.     48.     14.
165          UI     14.     14.      0.      0.      0.      0.      0.      0.      0.      0.
166          UI      0.      0.      0.      0.      0.      0.      0.      0.      0.      0.
             *
                                          HEC-1 INPUT                                          PAGE  5

LINE         ID.......1.......2.......3.......4.......5.......6.......7.......8.......9......10

167          KK     D23
168          KM    RETAIN 100 YEAR 2 HOUR, (49% FOR FUTURE DEVELOPMENT)
169          DT     D23      10
170          DI       0   10000
171          DQ       0   10000
             *

172          KK    C23A
173          KM
174          HC       2
             *
             * DDM   ***** Updated *****

175          KK     17B
176          KM   BASIN 17B
177          KM    THE FOLLOWING PARAMETERS WERE PROVIDED FOR THIS BASIN
178          KM    L=        .8  Lca=       .6   S=   50.0  Kn= .073  LAG=  36.8
179          KM    PHOENIX VALLEY S-GRAPH WAS USED FOR THIS BASIN
180          BA     .22
181          LG     .19     .24    4.00     .56   55.00
182          UI     20.     35.     81.    107.    129.    162.    233.    232.    179.    146.
183          UI    117.     92.     57.     35.     30.     20.     13.      6.      6.      6.
184          UI      6.      0.      0.      0.      0.      0.      0.      0.      0.      0.
185          UI      0.      0.      0.      0.      0.      0.      0.      0.      0.      0.
             *

186          KK    D17B
187          KM    RETAIN 100 YEAR 2 HOUR, (27% FOR FUTURE DEVELOPMENT)
188          DT    D17B       5
189          DI       0   10000
190          DQ       0   10000
             *
             * DDM   ***** Preserved *****

191          KK  17BT22
192          KM   ROUTE FLOWS FROM S17 TO C22 VIA LINED CHANNEL
193          RS       3    FLOW      -1
194          RC   0.035   0.015   0.035    2700  0.0114
195          RX       0       1       3       6      18      21      36      70
196          RY    6.25    6.10       6       0       0       3    3.25     3.5
             *
             * DDM   ***** Updated *****
```

```
197          KK      47
198          KM   BASIN 47
199          KM    THE FOLLOWING PARAMETERS WERE PROVIDED FOR THIS BASIN
200          KM    L=      3.0  Lca=      1.5   S=   51.2  Kn= .055  LAG=  66.7
201          KM    PHOENIX VALLEY S-GRAPH WAS USED FOR THIS BASIN
202          BA    1.67
203          LG     .28     .25    4.00     .55   17.00
204          UI     85.     85.     85.    265.    337.    402.    456.    500.    559.    633.
205          UI    721.    921.   1086.    972.    828.    734.    667.    584.    519.    460.
206          UI    404.    343.    250.    164.    148.    139.    126.     85.     85.     74.
207          UI     26.     26.     26.     26.     26.     26.     26.     26.     26.      0.
                                          HEC-1 INPUT                                          PAGE  6

LINE         ID.......1.......2.......3.......4.......5.......6.......7.......8.......9......10

208          UI      0.      0.      0.      0.      0.      0.      0.      0.      0.      0.
209          UI      0.      0.      0.      0.      0.      0.      0.      0.      0.      0.
             *

210          KK     D47
211          KM    RETAIN 100 YEAR 2 HOUR, (69% FOR FUTURE DEVELOPMENT)
212          DT     D47      68
213          DI       0   10000
214          DQ       0   10000
             *
             * ***************BELOW MODIFIED FOR ADMP*************************
             *

215          KK  BASIN4
             * KO     1       2
216          KM   ROUTE THROUGH OVERCHUTES 4 AND 5, HYDRAULICALLY CONNECTED
217          KM   STORAGE AND DISCHARGE WERE ADDED AT APPROPRIATE ELEVATIONS
218          KM   OUTFLOW THROUGH TWO 30-INCH PIPES.
219          KM   BASIN4 (BY4B)
220          RS       1    STOR      -1
221          SV       0     .01    0.31    1.85    5.61   11.12   17.18   23.67
222          SE    1568    1569    1570    1571    1572    1573    1574    1575
223          SQ       0    12.5    37.5      50      53      75    87.5     100   112.5     125
224          SQ     131
225          SE  1567.8  1569.0  1570.0  1570.4  1570.5  1571.5  1572.2  1572.9  1573.7  1574.6
226          SE    1575
             * NO DIVERSION THROUGH THE OLD CHANNEL FROM OVERCHUTE 5
             *

227          KK  RCAP4A
228          KM   REACH C4-4, C4-3, C4-2, + culverts C4C-2 & C4C-3 (CAP BASIN 4 OUTLET CHANNEL)
229          KM   ROUTE CAP BASIN 4
230          KM   ROUTE FLOW FROM BASIN 4 TO CULVERT CROSSING (C4C-1) @ 0.25 MILES SOUTH OF APA
231          KM      TRAIL AND 0.25 MILES WEST OF CRISMON ROAD.
232          RS       1    FLOW      -1
233          RC   0.025   0.025   0.025    2210  0.0033
234          RX       0      10      22      37      45      60      70      80
235          RY       6       6     3.8       0       0     3.8       6       6
             *

236          KK  RCAP4B
237          KM   REACH C4-1 and C4-2 including Culvert C4C-1 (CAP BASIN 4 OUTLET CHANNEL)
238          KM   ROUTE FLOW FROM CULVERT C4C-1 TO CONFLUENCE WITH BROADWAY CHANNEL AT 98th
239          KM     STREET, ABOUT 0.3 MILES SOUTH OF APACHE TRAIL.
240          RS       1    FLOW      -1
241          RC   0.025   0.025   0.025     300  0.0020
242          RX       0      10      22      37      45      60      70      80
243          RY       6       6     3.8       0       0     3.8       6       6
             *
                                          HEC-1 INPUT                                          PAGE  7

LINE         ID.......1.......2.......3.......4.......5.......6.......7.......8.......9......10

244          KK  RCAP4C
245          KM   REACH BY-12 AND BY-13, including culverts BYC-12, BYC-11, and BYC-10.
246          KM     (THIS ROUTING WITHIN THE BROADWAY CHANNEL.)
247          KM    ROUTE FLOW FROM 98th STREET TO 0.25 MILES EAST OF ELLSWORTH ROAD.
248          RS       1    FLOW      -1
249          RC    .025    .025    .025    2790  0.0021
250          RX       0       4     9.6      28      48    66.4      72      76
251          RY       6       6     4.6       0       0     4.6       6       6
             *

252          KK  RCAP4D
```

```
253          KM   REACH BY-8, BY-9, BY-10, BY-11 plus culverts BYC-10, BYC-9, BYC-8, & BYC-7.
254          KM     (THIS ROUTING WITHIN THE BROADWAY CHANNEL.)
255          KM    ROUTE FLOW FROM 0.25 MILES EAST OF ELLSWORTH ROAD TO ELLSWORTH ROAD.
256          RS       1    FLOW      -1
257          RC    .025    .015    .025    1360  0.0018
258          RX       0       6    13.1    22.5      38    47.4      54      60
259          RY       6       6     4.7       0       0     4.7       6       6
             *
             * DDM   ***** Updated *****
             -
260          KK      22
261          KM   BASIN 22
262          KM    THE FOLLOWING PARAMETERS WERE PROVIDED FOR THIS BASIN
263          KM    L=      1.2  Lca=       .3   S=   51.3  Kn= .048  LAG=  22.8
264          KM    PHOENIX VALLEY S-GRAPH WAS USED FOR THIS BASIN
265          BA     .41
266          LG     .22     .25    4.00     .57   52.00
267          UI     60.    229.    349.    509.    699.    491.    346.    212.    102.     65.
268          UI     26.     18.     18.      0.      0.      0.      0.      0.      0.      0.
269          UI      0.      0.      0.      0.      0.      0.      0.      0.      0.      0.
             *

270          KK     D22
271          KM    RETAIN 100 YEAR 2 HOUR, (33% FOR FUTURE DEVELOPMENT)
272          DT     D22      11
273          DI       0   10000
274          DQ       0   10000
             *
             * DDM   ***** Preserved *****

275          KK    C22A
276          KM   COMBINE FLOWS FROM CAP OVERCHUTES 4 & 5 AND SUBBASIN 22
277          HC       3
             *

278          KK   22T23
279          KM   REACH BY-6, BY-7 plus exist. culvert @ ELLSWORTH ROAD,
280          KM     and culvert BYC-5.
281          KM     (THIS ROUTING WITHIN THE BROADWAY CHANNEL.)
282          KM     ROUTE FLOW FROM ELLSWORTH ROAD (C22A) TO ABOUT 0.5 MILES WEST OF
283          KM     ELLSWORTH ROAD (C23B), WHICH IS AT THE APACHE CHANNEL.
284          RS       1    FLOW      -1
285          RC    .025    .015    .025    2140  0.0018
             *    This routing based on BY-7 bottom width, depth and slope.
```



```
LINE         ID.......1.......2.......3.......4.......5.......6.......7.......8.......9......10

286          RX       0       6    12.8    22.0      38    47.2      54      60
287          RY       6       6     4.6       0       0     4.6       6       6
             *
             * DDM   ***** Preserved *****

288          KK    C23B
289          KM   COMBINE FLOWS FROM C22, C17A, AND S23 AT C23
290          HC       2
             *

291          KK   23T24
292          KM   REACH BY-1, BY-2, BY-3, BY-4 AND BY-5, plus
293          KM     culverts BYC-1, BYC-2, BYC-3, BYC-4.
294          KM     (THIS ROUTING WITHIN THE BROADWAY CHANNEL.)
295          KM     ROUTE FLOW FROM APACHE CHANNEL ABOUT 0.5 MILES WEST OF ELLSWORTH
296          KM     ROAD (C23B) TO HAWES ROAD (C24).
297          RS       1    FLOW      -1
298          RC   0.025   0.015   0.025    3212  0.0017
299          RX       0       8    16.2      28      43    54.8      63      71
300          RY     5.9     6.0     5.9       0       0     5.9     6.0     5.9
             *
             * DDM   ***** Updated *****

301          KK      24
302          KM   BASIN 24
303          KM    THE FOLLOWING PARAMETERS WERE PROVIDED FOR THIS BASIN
304          KM    L=       .9  Lca=       .5   S=   43.5  Kn= .052  LAG=  27.2
305          KM    PHOENIX VALLEY S-GRAPH WAS USED FOR THIS BASIN
306          BA     .29
307          LG     .24     .25    4.00     .58   43.00
308          UI     36.    106.    186.    243.    353.    419.    301.    226.    164.     82.
309          UI     58.     36.     15.     11.     11.     11.      0.      0.      0.      0.
310          UI      0.      0.      0.      0.      0.      0.      0.      0.      0.      0.
```

```
                *

 311            KK     D24
 312            KM    RETAIN 100 YEAR 2 HOUR, (8% FOR FUTURE DEVELOPMENT)
 313            DT     D24       2
 314            DI       0   10000
 315            DQ       0   10000
                *

 316            KK    C24A
 317            KM    COMBINE FLOWS OF SUBBASIN 24 WITH FLOWS IN THE BROADWAY CHANNEL BEFORE
 318            KM    COMBINING WITH THE ROUTED FLOW OF 18T24 WHICH COMES FROM THE NORTH
 319            HC       2
                *
                * DDM   ***** Updated *****
                *
                                          HEC-1 INPUT                                                    PAGE  9

LINE            ID.......1.......2.......3.......4.......5.......6.......7.......8.......9......10


 320            KK      50
 321            KM   BASIN 50
 322            KM    THE FOLLOWING PARAMETERS WERE PROVIDED FOR THIS BASIN
 323            KM    L=        .9  Lca=        .4   S=   81.4  Kn= .079  LAG=  33.8
 324            KM    PHOENIX VALLEY S-GRAPH WAS USED FOR THIS BASIN
 325            BA     .28
 326            LG     .23     .24    4.00     .55   43.00
 327            UI     27.     55.    118.    153.    190.    259.    335.    259.    208.    163.
 328            UI    126.     76.     47.     37.     27.     11.      8.      8.      8.      8.
 329            UI      0.      0.      0.      0.      0.      0.      0.      0.      0.      0.
 330            UI      0.      0.      0.      0.      0.      0.      0.      0.      0.      0.
                *

 331            KK     D50
 332            KM    RETAIN 100 YEAR 2 HOUR, (64% FOR FUTURE DEVELOPMENT)
 333            DT     D50      13
 334            DI       0   10000
 335            DQ       0   10000
                *
                * DDM   ***** Preserved *****

 336            KK    CAP1
 337            RS       1    FLOW      -1
 338            SV       0   0.091   0.575   3.319  13.256
 339            SE    1566    1568    1570    1572    1574
 340            SQ       5      90     275     470     610
                *

 341            KK  BASIN1
                * KO     1       2
 342            KM        NEW DETENTION BASIN LOCATED DOWNSTREAM FROM CAP1
 343            KM        WITH 24-INCH OUTFALL
 344            RS       1    STOR      -1
 345            SV       0       0     0.1    1.26     4.1    7.59    8.31
 346            SE    1559    1560    1561    1562    1563    1564  1564.2
 347            SQ       0       5      10      15      20      25      30      34      36
 348            SQ      67     129     234
 349            SE  1559.0  1560.1  1560.6  1561.1  1561.6  1562.3  1563.1  1563.9  1564.2
 350            SE    1565  1565.5    1566
                *

 351            KK   RBAS1
 352            KM   ROUTE FLOWS FROM BASIN1 AT THE CAP TO SUBBASIN 18 (APACHE TRAIL AND HAWES RD)
 353            KM    NO IMPROVED CHANNEL
 354            RS      11    FLOW      -1
 355            RC    0.05   0.045    0.05    7000    0.02
 356            RX     100     200     300     301     303     304     404     504
 357            RY       6       5       2       0       0       2       5       6
                *
                * DDM   ***** Updated *****
                                          HEC-1 INPUT                                                    PAGE 10

LINE            ID.......1.......2.......3.......4.......5.......6.......7.......8.......9......10


 358            KK     18c
 359            KM   BASIN 18c
 360            KM    THIS IS THE FUTURE SUBBASIN
 361            KM    THE FOLLOWING PARAMETERS WERE PROVIDED FOR THIS BASIN
 362            KM    L=       1.2  Lca=        .7   S=   66.1  Kn= .061  LAG=  37.2
```

```
363          KM    PHOENIX VALLEY S-GRAPH WAS USED FOR THIS BASIN
364          BA     .50
365          LG     .22      .25     4.00      .57    44.00
366          UI     45.      75.     180.     237.     287.     355.     507.     531.     407.     335.
367          UI    268.     214.     140.      80.      72.      45.      34.      14.      14.      14.
368          UI     14.      14.      0.       0.       0.       0.       0.       0.       0.       0.
369          UI      0.       0.      0.       0.       0.       0.       0.       0.       0.       0.
             *

370          KK    D18c
371          KM    RETAIN THE 100 YEAR 2 HOUR VOLUME (53% OF BASIN HAS RETENTION
372          DT    D18c      20
373          DI       0   10000
374          DQ       0   10000
             *
             * DDM   ***** Preserved *****

375          KK    C18C
376          KM    COMBINE FLOWS FROM ROUTED FLOW OF SUBBASIN 50 WITH FLOW FROM 18c
377          KM    BEFORE CROSSING UNDERNEATH APACHE BLVD AND GOING INTO THE HAWES CHANNEL
378          HC       2
             *
             * DDM   ***** Preserved *****

379          KK   18T24
380          KM   REACH HS-6, HS-7, HS-8
381          KM   ROUTE FLOWS FROM SUBBASIN 18A TO SUBBASIN 24.
382          RS       1    FLOW      -1
383          RC    .025    .015    .025    2730  0.0017
384          RX       0       8      16      26      46      58      65      73
385          RY     5.0     5.1     5.2       0       0     5.2     5.1     5.0
             *  THE ABOVE CHANNEL DIMS ARE BASED ON THE NARROWEST DESIGN REACH.
             *
             *
             * DDM   ***** Preserved *****

386          KK     C24
387          KM   COMBINE FLOWS FROM C23, S18A AND S24
388          ZW     A=HAWES RD @ BROADWAY RD   B=HAWES CHANNEL PROJECT  C=FLOW   F=HYDROGRAPH
389          HC       2
             *
             * DDM   ***** Preserved *****

390          KK  BRDHAW
391          KM   THIS PLAN DOES NOT PROVIDE FOR A DIVERT INTO THE BROADWAY ROAD STORM DRAIN
392          DT  DIVBRD
393          DI       0     200     400     500     700    1000
394          DQ       0       0       0       0       0       0
             *
                                          HEC-1 INPUT                                          PAGE 11

LINE         ID.......1.......2.......3.......4.......5.......6.......7.......8.......9......10

395          KK  RT31B1
396          KM   THIS ROUTING STEP HAS BEEN BROKEN OUT OF A LARGER SEQUENCE FOR SIMPLICITY
397          KM   REACH HS-5 plus culvert HSC-4
398          KM   ROUTE FLOWS FROM HAWES ROAD AND BROADWAY ROAD (C24) TO CORAL BELL AVENUE.
399          KO                                      21                      10
400          ZW   A=FLOW AFTER 360 CFS DIVERT TO WEST B=HAWES CHANNEL PROJECT C=FLOW  F=HYDRO
401          RS       1    FLOW      -1
402          RC    .025    .015    .025    1312  0.0015
403          RX       0       8      15      28      68      81      89      97
404          RY     6.2     6.4     6.5       0       0     6.5     6.4     6.2
             *

405          KK  RT31B2
406          KM   THIS ROUTING STEP HAS BEEN BROKEN OUT OF A LARGER SEQUENCE FOR SIMPLICITY
407          KM   REACH HS-4A AND HS4-B plus culvert HSC-3
408          KM   ROUTE FLOWS FROM CORAL BELL AVENUE TO EMELITA AVENUE.
409          RS       1    FLOW      -1
410          RC    .025    .015    .025    2080  0.0018
411          RX       0       8    15.9      16      66    66.1      74      82
412          RY     5.8     5.9     6.1       0       0     6.1     5.9     5.8
             *

413          KK   LITA2
414          KM   THIS IS PLAN 9 FOR THE EMELITA BASIN
415          KO       3
416          DT  BASIN9
417          DI       0     700     800     900    1000    1100    1200    1300    1400
```

```
418          DQ       0       0       0     100     200     300     400     500     600
             *

419          KK  RT31B3
420          KM   THIS ROUTING STEP HAS BEEN BROKEN OUT OF A LARGER SEQUENCE FOR SIMPLICITY
421          KM   REACH HS-3
422          KM    THIS REACH IS AN EXISTING CHANNEL FOR THE CRESCENT RUN MOBILE HOME PARK.
423          KM    The existing channel 5.6 ft deep has no freeboard.  Overbank flows in street
424          KM    Routing values per channel design plans,
425          KM    Sheet 2 of 19, City of Mesa Project 97-69.
426          KM   ROUTE FLOWS FROM EMELITA AVENUE TO SOUTHERN AVENUE (C31) WITHIN SUBBASIN 31B.
427          RS       1    FLOW      -1
428          RC    .025    .015    .025    1935  0.0033
429          RX       0    35.6    41.6      50    66.7    75.1    81.1    92.0
430          RY     5.4     4.7     5.6       0       0     5.6     7.6     7.7
             *
             * DDM   ***** Updated *****
             *

431          KK     31B
432          KM   BASIN 31B
433          KM    THE FOLLOWING PARAMETERS WERE PROVIDED FOR THIS BASIN
434          KM    L=      1.2  Lca=       .5   S=   29.7  Kn= .049  LAG=  30.8
435          KM    PHOENIX VALLEY S-GRAPH WAS USED FOR THIS BASIN
436          BA     .47
437          LG     .24     .25    4.45     .46   37.00
438          UI     52.    125.    240.    309.    399.    601.    544.    416.    321.    243.
                                           HEC-1 INPUT                                          PAGE 12

LINE         ID.......1.......2.......3.......4.......5.......6.......7.......8.......9......10

439          UI    141.     88.     63.     44.     16.     16.     16.     16.      0.      0.
440          UI      0.      0.      0.      0.      0.      0.      0.      0.      0.      0.
             *

441          KK    D31B
442          KM    RETAIN 100 YEAR 2 HOUR, (66% FOR FUTURE DEVELOPMENT)
443          DT    D31B      23
444          DI       0   10000
445          DQ       0   10000
             *
             * DDM   ***** Preserved *****

446          KK     C31
447          KM   COMBINE FLOWS FROM C24  WITH S31A AND S31B
448          ZW   A=FLOW SOUTHERN AND HAWES BEFORE SPLIT BOX B=HAWES CHANNEL PROJ C=FLOW F=HYDR
449          HC       2
             *
             * DDM   ***** Preserved *****

450          KK    D31S
451          KM    THIS DIVERT RECORD IS FOR THE BOX CULVERT SYSTEM AT SOUTHERN AVE AND HAWES
452          KM    IT IS BASED UPON INLET CONTROL ANALYSIS OF THE FOLLOWING STRUCTURES:
453          KM    2-8'X4' CBC SOUTH,  1-10'X6' CBC TO THE WEST
454          KM    THE CULVERT TO THE SOUTH IS THE EXISTING CULVERT. THE ONE TO THE WEST WILL
455          KM    BE CONSTRUCTED AND ITS INVERT SET 2' BELOW THE EXISTING CULVERT
456          DT    D31S
             *  THESE NEW CARDS BASED UPON HEC-RAS ANALYSIS
457          DI       0      86     109     153     253     279     336     417     471     524
458          DI     608     686     740     800     884     968    1032    1090    1150    1210
459          DQ       0       0       0      21      43      64      96     141     159     176
460          DQ     224     272     296     320     368     416     444     472     502     532
             *
             * DDM   ***** Preserved *****

461          KK  31WT32
462          KM   ROUTE FLOWS FROM D31A TO C32
463          RS    1.76    FLOW      -1
464          RC    .035    .022    .035    5280   .0027
465          RX       0    2005    2012    2012    2106    2106    2113    3122
466          RY     4.5     4.5     3.5       0       0     3.5     4.5     4.5
             *

467          KK    D31S
468          KM   RETRIEVE FLOW AT SOUTHERN AVE
469          DR    D31S
             *

470          KK  31T381  ROUTED IN TWO STEPS DUE TO CHANNEL DISSIMILARITY.
471          KM   REACH HS-2 plus culvert HSC-2
472          KM     ROUTE FLOWS FROM SOUTHERN AVENUE (C31) IN THE HAWES CHANNEL.
```

```
 473          KM   REACH HS-2 IS A PROPOSED CHANNEL SOON-TO-BE-CONSTRUCTED.  IT IS 4.5 FEET
 474          KM     DEEP, WITH FREEBOARD. CHANNEL CROSS-SECTION FROM DESIGN PLANS FOR
 475          KM     SOUTHERN AVENUE DRAINAGE IMPROVEMENTS.  SHEET 28 OF 43
 476          KM     CITY OF MESA PROJECT NO. 97-56.1 DESIGN PLANS BY ENTELLUS
 477          KM     DATED 8/8/97 REV. 12/19/97
```



```
LINE          ID.......1.......2.......3.......4.......5.......6.......7.......8.......9......10

 478          RS       1    FLOW      -1
 479          RC   0.025   0.015   0.025    1248   .0022
 480          RX       0      32      37      46      56      65      73      75
 481          RY       5     7.0     4.5       0       0     4.5     9.0     9.5
              *

 482          KK  31T382
 483          KM   REACH HS-1 plus culvert HSC-1
 484          KM     ROUTE FLOWS TO SUPERSTITION FREEWAY (C38)
 485          KM     IN THE HAWES CHANNEL.
 486          RS       1    FLOW      -1
 487          RC   0.025   0.015   0.025     810   .0017
 488          RX       0      10      16      26      51      61      77      81
 489          RY     5.3     4.8     4.9       0       0     4.9     4.6     3.6
              *
 490          ZZ
```

```
          SCHEMATIC DIAGRAM OF STREAM NETWORK
PUT
INE     (V) ROUTING          (--->) DIVERSION OR PUMP FLOW

NO.     (.) CONNECTOR        (<---) RETURN OF DIVERTED OR PUMPED FLOW

 42          48
              .
              .
 55           .------->     D48
 53         D48
              V
              V
 58        CAP3
              V
              V
 63      BASIN3
              V
              V
 73       RCAP3
              .
              .
 78           .          49
              .           .
              .           .
 91           .           .------->     D49
 89           .         D49
              .           V
              .           V
 94           .        CAP2
              .           V
              .           V
 99           .      BASIN2
              .           V
              .           V
107           .      RCAP2B
              .           .
              .           .
115           .           .         17A
              .           .           .
              .           .           .
128           .           .           .------->    D17A
126           .           .        D17A
              .           .           .
              .           .           .
131           .       C17A1............
              .           .
              .           .
134        C17A2............
              V
              V
137        AT23B
              V
              V
147        AT23A
```

```
                .
                .
157             .          23
                .           .
                .           .
169             .           .-------->     D23
167             .         D23
                .           .
                .           .
172         C23A.............
                .
                .
175             .         17B
                .           .
                .           .
188             .           .-------->    D17B
186             .        D17B
                .          V
                .          V
191             .      17BT22
                .           .
                .           .
197             .           .          47
                .           .           .
                .           .           .
212             .           .           .-------->     D47
210             .           .         D47
                .           .           V
                .           .           V
215             .           .      BASIN4
                .           .           V
                .           .           V
227             .           .      RCAP4A
                .           .           V
                .           .           V
236             .           .      RCAP4B
                .           .           V
                .           .           V
244             .           .      RCAP4C
                .           .           V
                .           .           V
252             .           .      RCAP4D
                .           .           .
                .           .           .
260             .           .           .          22
                .           .           .           .
                .           .           .           .
272             .           .           .           .-------->     D22
270             .           .           .         D22
                .           .           .           .
                .           .           .           .
275             .        C22A.......................
                .          V
                .          V
278             .       22T23
                .           .
                .           .
288         C23B............
               V
               V
291        23T24
                .
                .
301             .          24
                .           .
                .           .
313             .           .-------->     D24
311             .         D24
                .           .
                .           .
316         C24A............
                .
                .
320             .          50
                .           .
                .           .
333             .           .-------->     D50
331             .         D50
                .          V
                .          V
336             .        CAP1
```

```
                .          V
                .          V
 341            .      BASIN1
                .          V
                .          V
 351            .       RBAS1
                .          .
                .          .
 358            .          .         18c
                .          .           .
                .          .           .
 372            .          .           .-------->    D18c
 370            .          .        D18c
                .          .           .
                .          .           .
 375            .        C18C............
                .          V
                .          V
 379            .       18T24
                .          .
                .          .
 386          C24............
                .
                .
 392            .-------->  DIVBRD
 390       BRDHAW
                V
                V
 395       RT31B1
                V
                V
 405       RT31B2
                .
                .
 416            .-------->  BASIN9
 413        LITA2
                V
                V
 419       RT31B3
                .
                .
 431            .         31B
                .          .
                .          .
 443            .          .-------->    D31B
 441            .        D31B
                .          .
                .          .
 446          C31............
                .
                .
 456            .-------->    D31S
 450         D31S
                V
                V
 461       31WT32
                .
                .
 469            .          .<--------    D31S
 467            .        D31S
                .          V
                .          V
 470            .      31T381
                .          V
                .          V
 482            .      31T382
```

**) RUNOFF ALSO COMPUTED AT THIS LOCATION
****
****

```
                                        *                                        *
  FLOOD HYDROGRAPH PACKAGE  (HEC-1)     *                                        *    U.S. ARMY CORPS OF
INEERS     *
                JUL   1997              *                                        *    HYDROLOGIC ENGINEERING
TER    *
            VERSION 4.1                 *                                        *          609 SECOND STREET
                                        *                                        *       DAVIS, CALIFORNIA 9561
```

****
****

ORIGINAL MODEL FROM THE EAST MESA ADMP
LANDUSE IS OF THE FUTURE CONDITION
SOME ROUTINGS WERE TAKEN FROM THE DIBBLE MODEL(NDIF.DAT) AS PROVIDED FOR THE DRAINAGE IMPROVEMENTS ASSOCIATED WITH THE CAP BASINS AND DOWNSTREAM IMPROVEMENTS WITH THE OUTLETS OF THESE BASINS

100YR-24HR EVENT

SUBBASIN RETENTION VOLUMES ARE BASED UPON THE 100 YEAR 2 HR STORM.THE AMOUNT OF THIS ULTIMATE VOLUME WAS REDUCED TO ACCOUNT FOR THE PORTION OF EACH SUBBASIN THAT IS ALREADY DEVELOPED AND DOES NOT HAVE RETENTION FOR THAT DEVELOPMENT. THE AMOUNT WAS FURTHER LOWERED TO ACCOUNT FOR SOME OF THE RUNOFF NOT GETTING INTO RETENTION BASINS

THIS MODEL IS BASED UPON THE CONCEPT OF PROVIDING A WEIR AT THE EMELITA BASIN WHICH LETS 800 CFS CONTINUE TO GO DOWN THE CHANNEL TOWARD SOUTHERN AVE.
ANYTHING ABOVE 800 CFS GOES INTO THE DETENTION BASIN
THIS IS MODELED IN THE KK RECORD CALLED "LITA"

FILENAME IS PLAND.DAT

DDM MCUHP2 MESA AREA DRAINAGE MASTER PLAN

```
25 IO          OUTPUT CONTROL VARIABLES
                     IPRNT           5  PRINT CONTROL
                     IPLOT           0  PLOT CONTROL
                     QSCAL          0.  HYDROGRAPH PLOT SCALE

   IT          HYDROGRAPH TIME DATA
                      NMIN           5  MINUTES IN COMPUTATION INTERVAL
                     IDATE      1APR97  STARTING DATE
                     ITIME        0000  STARTING TIME
                        NQ        1000  NUMBER OF HYDROGRAPH ORDINATES
                    NDDATE      4APR97  ENDING DATE
                    NDTIME        1115  ENDING TIME
                     ICENT          19  CENTURY MARK

               COMPUTATION INTERVAL     .08 HOURS
                    TOTAL TIME BASE   83.25 HOURS

        ENGLISH UNITS
             DRAINAGE AREA          SQUARE MILES
             PRECIPITATION DEPTH    INCHES
             LENGTH, ELEVATION      FEET
             FLOW                   CUBIC FEET PER SECOND
             STORAGE VOLUME         ACRE-FEET
             SURFACE AREA           ACRES
             TEMPERATURE            DEGREES FAHRENHEIT

27 JD          INDEX STORM NO. 1
                      STRM        3.60  PRECIPITATION DEPTH
                      TRDA         .01  TRANSPOSITION DRAINAGE AREA

28 PI            PRECIPITATION PATTERN
                 .00       .00       .00       .00       .00       .00       .00       .00       .00       .00
                 .00       .00       .00       .00       .00       .00       .00       .00       .00       .00
                 .00       .00       .00       .00       .00       .00       .00       .00       .00       .00
                 .00       .00       .00       .00       .00       .00       .00       .00       .00       .00
                 .00       .00       .00       .00       .00       .00       .00       .00       .00       .00
                 .00       .00       .00       .00       .00       .00       .00       .00       .00       .00
                 .00       .00       .00       .00       .00       .00       .00       .00       .00       .00
                 .00       .00       .00       .00       .00       .00       .00       .00       .00       .00
                 .00       .00       .00       .00       .00       .00       .00       .00       .00       .00
                 .00       .00       .00       .00       .00       .00       .00       .00       .00       .00
                 .00       .00       .00       .00       .00       .00       .00       .00       .00       .00
                 .00       .00       .00       .00       .00       .00       .00       .00       .00       .00
                 .00       .00       .00       .00       .00       .00       .01       .01       .01       .01
                 .01       .01       .01       .01       .01       .02       .02       .02       .05       .05
                 .05       .07       .07       .07       .01       .01       .01       .01       .01       .01
```

.01	.01	.01	.01	.01	.01	.00	.00	.00	.00
.00	.00	.00	.00	.00	.00	.00	.00	.00	.00
.00	.00	.00	.00	.00	.00	.00	.00	.00	.00
.00	.00	.00	.00	.00	.00	.00	.00	.00	.00
.00	.00	.00	.00	.00	.00	.00	.00	.00	.00
.00	.00	.00	.00	.00	.00	.00	.00	.00	.00
.00	.00	.00	.00	.00	.00	.00	.00	.00	.00
.00	.00	.00	.00	.00	.00	.00	.00	.00	.00
.00	.00	.00	.00	.00	.00	.00	.00	.00	.00
.00	.00	.00	.00	.00	.00	.00	.00	.00	.00
.00	.00	.00	.00	.00	.00	.00	.00	.00	.00
.00	.00	.00	.00	.00	.00	.00	.00	.00	.00
.00	.00	.00	.00	.00	.00	.00	.00	.00	.00
.00	.00	.00	.00	.00	.00	.00	.00	.00	.00

38 JD INDEX STORM NO. 2

STRM 3.58 PRECIPITATION DEPTH

TRDA 1.00 TRANSPOSITION DRAINAGE AREA

0 PI PRECIPITATION PATTERN

.00	.00	.00	.00	.00	.00	.00	.00	.00	.00
.00	.00	.00	.00	.00	.00	.00	.00	.00	.00
.00	.00	.00	.00	.00	.00	.00	.00	.00	.00
.00	.00	.00	.00	.00	.00	.00	.00	.00	.00
.00	.00	.00	.00	.00	.00	.00	.00	.00	.00
.00	.00	.00	.00	.00	.00	.00	.00	.00	.00
.00	.00	.00	.00	.00	.00	.00	.00	.00	.00
.00	.00	.00	.00	.00	.00	.00	.00	.00	.00
.00	.00	.00	.00	.00	.00	.00	.00	.00	.00
.00	.00	.00	.00	.00	.00	.00	.00	.00	.00
.00	.00	.00	.00	.00	.00	.00	.00	.00	.00
.00	.00	.00	.00	.00	.00	.00	.00	.00	.00
.00	.00	.00	.00	.00	.00	.01	.01	.01	.01
.01	.01	.01	.01	.01	.02	.02	.02	.05	.05
.05	.07	.07	.07	.01	.01	.01	.01	.01	.01
.01	.01	.01	.01	.01	.01	.00	.00	.00	.00
.00	.00	.00	.00	.00	.00	.00	.00	.00	.00
.00	.00	.00	.00	.00	.00	.00	.00	.00	.00
.00	.00	.00	.00	.00	.00	.00	.00	.00	.00
.00	.00	.00	.00	.00	.00	.00	.00	.00	.00
.00	.00	.00	.00	.00	.00	.00	.00	.00	.00
.00	.00	.00	.00	.00	.00	.00	.00	.00	.00
.00	.00	.00	.00	.00	.00	.00	.00	.00	.00
.00	.00	.00	.00	.00	.00	.00	.00	.00	.00
.00	.00	.00	.00	.00	.00	.00	.00	.00	.00
.00	.00	.00	.00	.00	.00	.00	.00	.00	.00
.00	.00	.00	.00	.00	.00	.00	.00	.00	.00
.00	.00	.00	.00	.00	.00	.00	.00	.00	.00
.00	.00	.00	.00	.00	.00	.00	.00	.00	.00
.00	.00	.00	.00	.00	.00	.00	.00	.00	.00

39 JD INDEX STORM NO. 3

STRM 3.49 PRECIPITATION DEPTH

TRDA 5.00 TRANSPOSITION DRAINAGE AREA

0 PI PRECIPITATION PATTERN

.00	.00	.00	.00	.00	.00	.00	.00	.00	.00
.00	.00	.00	.00	.00	.00	.00	.00	.00	.00
.00	.00	.00	.00	.00	.00	.00	.00	.00	.00
.00	.00	.00	.00	.00	.00	.00	.00	.00	.00
.00	.00	.00	.00	.00	.00	.00	.00	.00	.00
.00	.00	.00	.00	.00	.00	.00	.00	.00	.00
.00	.00	.00	.00	.00	.00	.00	.00	.00	.00
.00	.00	.00	.00	.00	.00	.00	.00	.00	.00
.00	.00	.00	.00	.00	.00	.00	.00	.00	.00
.00	.00	.00	.00	.00	.00	.00	.00	.00	.00
.00	.00	.00	.00	.00	.00	.00	.00	.00	.00
.00	.00	.00	.00	.00	.00	.00	.00	.00	.00
.00	.00	.00	.00	.00	.00	.01	.01	.01	.01
.01	.01	.01	.01	.01	.02	.02	.02	.05	.05
.05	.07	.07	.07	.01	.01	.01	.01	.01	.01
.01	.01	.01	.01	.01	.01	.00	.00	.00	.00
.00	.00	.00	.00	.00	.00	.00	.00	.00	.00
.00	.00	.00	.00	.00	.00	.00	.00	.00	.00
.00	.00	.00	.00	.00	.00	.00	.00	.00	.00
.00	.00	.00	.00	.00	.00	.00	.00	.00	.00
.00	.00	.00	.00	.00	.00	.00	.00	.00	.00
.00	.00	.00	.00	.00	.00	.00	.00	.00	.00
.00	.00	.00	.00	.00	.00	.00	.00	.00	.00
.00	.00	.00	.00	.00	.00	.00	.00	.00	.00
.00	.00	.00	.00	.00	.00	.00	.00	.00	.00
.00	.00	.00	.00	.00	.00	.00	.00	.00	.00
.00	.00	.00	.00	.00	.00	.00	.00	.00	.00
.00	.00	.00	.00	.00	.00	.00	.00	.00	.00

```
                .00       .00       .00       .00       .00       .00       .00       .00       .00       .00
                .00       .00       .00       .00       .00       .00       .00       .00       .00       .00
                .00       .00       .00       .00       .00       .00       .00       .00

40 JD        INDEX STORM NO. 4
                STRM        3.38  PRECIPITATION DEPTH
                TRDA       10.00  TRANSPOSITION DRAINAGE AREA

 0 PI          PRECIPITATION PATTERN
                .00       .00       .00       .00       .00       .00       .00       .00       .00       .00
                .00       .00       .00       .00       .00       .00       .00       .00       .00       .00
                .00       .00       .00       .00       .00       .00       .00       .00       .00       .00
                .00       .00       .00       .00       .00       .00       .00       .00       .00       .00
                .00       .00       .00       .00       .00       .00       .00       .00       .00       .00
                .00       .00       .00       .00       .00       .00       .00       .00       .00       .00
                .00       .00       .00       .00       .00       .00       .00       .00       .00       .00
                .00       .00       .00       .00       .00       .00       .00       .00       .00       .00
                .00       .00       .00       .00       .00       .00       .00       .00       .00       .00
                .00       .00       .00       .00       .00       .00       .00       .00       .00       .00
                .00       .00       .00       .00       .00       .00       .00       .00       .00       .00
                .00       .00       .00       .00       .00       .01       .01       .01       .01       .01
                .01       .01       .01       .01       .01       .02       .02       .02       .05       .05
                .05       .07       .07       .07       .01       .01       .01       .01       .01       .01
                .01       .01       .01       .01       .01       .01       .00       .00       .00       .00
                .00       .00       .00       .00       .00       .00       .00       .00       .00       .00
                .00       .00       .00       .00       .00       .00       .00       .00       .00       .00
                .00       .00       .00       .00       .00       .00       .00       .00       .00       .00
                .00       .00       .00       .00       .00       .00       .00       .00       .00       .00
                .00       .00       .00       .00       .00       .00       .00       .00       .00       .00
                .00       .00       .00       .00       .00       .00       .00       .00       .00       .00
                .00       .00       .00       .00       .00       .00       .00       .00       .00       .00
                .00       .00       .00       .00       .00       .00       .00       .00       .00       .00
                .00       .00       .00       .00       .00       .00       .00       .00       .00       .00
                .00       .00       .00       .00       .00       .00       .00       .00       .00       .00
                .00       .00       .00       .00       .00       .00       .00       .00       .00       .00
                .00       .00       .00       .00       .00       .00       .00       .00

41 JD        INDEX STORM NO. 5
                STRM        3.27  PRECIPITATION DEPTH
                TRDA       20.00  TRANSPOSITION DRAINAGE AREA

 0 PI          PRECIPITATION PATTERN
                .00       .00       .00       .00       .00       .00       .00       .00       .00       .00
                .00       .00       .00       .00       .00       .00       .00       .00       .00       .00
                .00       .00       .00       .00       .00       .00       .00       .00       .00       .00
                .00       .00       .00       .00       .00       .00       .00       .00       .00       .00
                .00       .00       .00       .00       .00       .00       .00       .00       .00       .00
                .00       .00       .00       .00       .00       .00       .00       .00       .00       .00
                .00       .00       .00       .00       .00       .00       .00       .00       .00       .00
                .00       .00       .00       .00       .00       .00       .00       .00       .00       .00
                .00       .00       .00       .00       .00       .00       .00       .00       .00       .00
                .00       .00       .00       .00       .00       .00       .00       .00       .00       .00
                .00       .00       .00       .00       .00       .00       .00       .00       .00       .00
                .00       .00       .00       .00       .00       .00       .00       .00       .00       .00
                .00       .00       .00       .00       .00       .00       .01       .01       .01       .01
                .01       .01       .01       .01       .01       .02       .02       .02       .05       .05
                .05       .07       .07       .07       .01       .01       .01       .01       .01       .01
                .01       .01       .01       .01       .01       .01       .00       .00       .00       .00
                .00       .00       .00       .00       .00       .00       .00       .00       .00       .00
                .00       .00       .00       .00       .00       .00       .00       .00       .00       .00
                .00       .00       .00       .00       .00       .00       .00       .00       .00       .00
                .00       .00       .00       .00       .00       .00       .00       .00       .00       .00
                .00       .00       .00       .00       .00       .00       .00       .00       .00       .00
                .00       .00       .00       .00       .00       .00       .00       .00       .00       .00
                .00       .00       .00       .00       .00       .00       .00       .00       .00       .00
                .00       .00       .00       .00       .00       .00       .00       .00       .00       .00
                .00       .00       .00       .00       .00       .00       .00       .00       .00       .00
                .00       .00       .00       .00       .00       .00       .00       .00       .00       .00
                .00       .00       .00       .00       .00       .00       .00       .00       .00       .00
 -----DSS---ZOPEN:  Existing File Opened,  File: PLAND.DSS
                   Unit:  71;  DSS Version: 6-JG
 ---DSS---ZWRITE Unit  71; Vers.    2:  /HAWES RD @ BROADWAY RD/HAWES CHANNEL PROJECT/FLOW/31MAR1997/5MIN/HYDROGRAPH/
 ---DSS---ZWRITE Unit  71; Vers.    2:  /HAWES RD @ BROADWAY RD/HAWES CHANNEL PROJECT/FLOW/01APR1997/5MIN/HYDROGRAPH/
 ---DSS---ZWRITE Unit  71; Vers.    2:  /HAWES RD @ BROADWAY RD/HAWES CHANNEL PROJECT/FLOW/02APR1997/5MIN/HYDROGRAPH/
 ---DSS---ZWRITE Unit  71; Vers.    2:  /HAWES RD @ BROADWAY RD/HAWES CHANNEL PROJECT/FLOW/03APR1997/5MIN/HYDROGRAPH/
 ---DSS---ZWRITE Unit  71; Vers.    2:  /HAWES RD @ BROADWAY RD/HAWES CHANNEL PROJECT/FLOW/04APR1997/5MIN/HYDROGRAPH/
```

```
* *** *** *** *** *** *** *** *** *** *** *** *** *** *** *** *** *** *** *** *** *** *** *** *** *** *** *** *** *** *** **
 ***


          **************
          *            *
95 KK     *    RT31B1  *
          *            *
          **************

99 KO          OUTPUT CONTROL VARIABLES
                     IPRNT           5  PRINT CONTROL
                     IPLOT           0  PLOT CONTROL
                     QSCAL          0.  HYDROGRAPH PLOT SCALE
                     IPNCH           0  PUNCH COMPUTED HYDROGRAPH
                      IOUT          21  SAVE HYDROGRAPH ON THIS UNIT
                     ISAV1           1  FIRST ORDINATE PUNCHED OR SAVED
                     ISAV2        1000  LAST ORDINATE PUNCHED OR SAVED
                    TIMINT       1.000  TIME INTERVAL IN HOURS

---DSS---ZWRITE Unit  71; Vers.    2:  /FLOW AFTER 360 CFS DIVERT TO WES/HAWES CHANNEL PROJECT/FLOW/31MAR1997/5MIN/HYD/
---DSS---ZWRITE Unit  71; Vers.    2:  /FLOW AFTER 360 CFS DIVERT TO WES/HAWES CHANNEL PROJECT/FLOW/01APR1997/5MIN/HYD/
---DSS---ZWRITE Unit  71; Vers.    2:  /FLOW AFTER 360 CFS DIVERT TO WES/HAWES CHANNEL PROJECT/FLOW/02APR1997/5MIN/HYD/
---DSS---ZWRITE Unit  71; Vers.    2:  /FLOW AFTER 360 CFS DIVERT TO WES/HAWES CHANNEL PROJECT/FLOW/03APR1997/5MIN/HYD/
---DSS---ZWRITE Unit  71; Vers.    2:  /FLOW AFTER 360 CFS DIVERT TO WES/HAWES CHANNEL PROJECT/FLOW/04APR1997/5MIN/HYD/


* *** *** *** *** *** *** *** *** *** *** *** *** *** *** *** *** *** *** *** *** *** *** *** *** *** *** *** *** *** *** **
 ***


          **************
          *            *
13 KK     *     LITA2  *
          *            *
          **************

15 KO          OUTPUT CONTROL VARIABLES
                     IPRNT           3  PRINT CONTROL
                     IPLOT           0  PLOT CONTROL
                     QSCAL          0.  HYDROGRAPH PLOT SCALE

   DT          DIVERSION
                     ISTAD      BASIN9  DIVERSION HYDROGRAPH IDENTIFICATION

   DI             INFLOW         .00    700.00    800.00    900.00   1000.00   1100.00   1200.00   1300.00   1400.00

   DQ      DIVERTED FLOW         .00       .00       .00    100.00    200.00    300.00    400.00    500.00    600.00

                                                                  ***

    ***             ***             ***             ***             ***

                       DIVERSION HYDROGRAPH   BASIN9
                     TRANSPOSITION AREA       .0 SQ MI

EAK FLOW     TIME                          MAXIMUM AVERAGE FLOW
                                     6-HR       24-HR       72-HR     83.25-HR
 (CFS)       (HR)
                        (CFS)
   701.     12.42                     53.         13.          4.          4.
                     (INCHES)       .092        .092        .092        .092
                      (AC-FT)        26.         26.         26.         26.

                      CUMULATIVE AREA =    5.39 SQ MI


    ***             ***             ***             ***             ***

                       HYDROGRAPH AT STATION    LITA2
                     TRANSPOSITION AREA       .0 SQ MI

EAK FLOW     TIME                          MAXIMUM AVERAGE FLOW
                                     6-HR       24-HR       72-HR     83.25-HR
 (CFS)       (HR)
                        (CFS)
   800.     12.17                    395.        130.         47.         41.
                     (INCHES)       .681        .899        .971        .987
```

(AC-FT)	196.	258.	279.	284.

CUMULATIVE AREA = 5.39 SQ MI

*** *** *** *** ***

DIVERSION HYDROGRAPH BASIN9
TRANSPOSITION AREA 1.0 SQ MI

EAK FLOW (CFS)	TIME (HR)		MAXIMUM AVERAGE FLOW 6-HR	24-HR	72-HR	83.25-HR
		(CFS)				
684.	12.50		51.	13.	4.	4.
		(INCHES)	.089	.089	.089	.089
		(AC-FT)	26.	26.	26.	26.

CUMULATIVE AREA = 5.39 SQ MI

*** *** *** *** ***

HYDROGRAPH AT STATION LITA2
TRANSPOSITION AREA 1.0 SQ MI

EAK FLOW (CFS)	TIME (HR)		MAXIMUM AVERAGE FLOW 6-HR	24-HR	72-HR	83.25-HR
		(CFS)				
800.	12.17		392.	129.	46.	41.
		(INCHES)	.677	.890	.962	.978
		(AC-FT)	194.	256.	276.	281.

CUMULATIVE AREA = 5.39 SQ MI

*** *** *** *** ***

DIVERSION HYDROGRAPH BASIN9
TRANSPOSITION AREA 5.0 SQ MI

EAK FLOW (CFS)	TIME (HR)		MAXIMUM AVERAGE FLOW 6-HR	24-HR	72-HR	83.25-HR
		(CFS)				
612.	12.50		44.	11.	4.	3.
		(INCHES)	.076	.076	.076	.076
		(AC-FT)	22.	22.	22.	22.

CUMULATIVE AREA = 5.39 SQ MI

*** *** *** *** ***

HYDROGRAPH AT STATION LITA2
TRANSPOSITION AREA 5.0 SQ MI

EAK FLOW (CFS)	TIME (HR)		MAXIMUM AVERAGE FLOW 6-HR	24-HR	72-HR	83.25-HR
		(CFS)				
800.	12.17		379.	123.	45.	39.
		(INCHES)	.654	.850	.921	.938
		(AC-FT)	188.	244.	265.	270.

CUMULATIVE AREA = 5.39 SQ MI

*** *** *** *** ***

DIVERSION HYDROGRAPH BASIN9
TRANSPOSITION AREA 10.0 SQ MI

EAK FLOW (CFS)	TIME (HR)		MAXIMUM AVERAGE FLOW 6-HR	24-HR	72-HR	83.25-HR
		(CFS)				
521.	12.50		36.	9.	3.	3.
		(INCHES)	.062	.062	.062	.062
		(AC-FT)	18.	18.	18.	18.

CUMULATIVE AREA = 5.39 SQ MI

*** *** *** *** ***

HYDROGRAPH AT STATION LITA2
TRANSPOSITION AREA 10.0 SQ MI

EAK FLOW (CFS)	TIME (HR)		MAXIMUM AVERAGE FLOW 6-HR	24-HR	72-HR	83.25-HR
		(CFS)				
800.	12.25		360.	116.	42.	37.
		(INCHES)	.621	.798	.870	.886
		(AC-FT)	179.	229.	250.	255.

CUMULATIVE AREA = 5.39 SQ MI

*** *** *** *** ***

DIVERSION HYDROGRAPH BASIN9
TRANSPOSITION AREA 20.0 SQ MI

EAK FLOW (CFS)	TIME (HR)		MAXIMUM AVERAGE FLOW 6-HR	24-HR	72-HR	83.25-HR
		(CFS)				
427.	12.50		28.	7.	2.	2.
		(INCHES)	.048	.048	.048	.048
		(AC-FT)	14.	14.	14.	14.

CUMULATIVE AREA = 5.39 SQ MI

*** *** *** *** ***

HYDROGRAPH AT STATION LITA2
TRANSPOSITION AREA 20.0 SQ MI

EAK FLOW (CFS)	TIME (HR)		MAXIMUM AVERAGE FLOW 6-HR	24-HR	72-HR	83.25-HR
		(CFS)				
800.	12.25		339.	108.	40.	35.
		(INCHES)	.585	.746	.818	.834
		(AC-FT)	168.	214.	235.	240.

CUMULATIVE AREA = 5.39 SQ MI

*** *** *** *** ***

INTERPOLATED DIVERSION HYDROGRAPH AT BASIN9

EAK FLOW (CFS)	TIME (HR)		MAXIMUM AVERAGE FLOW 6-HR	24-HR	72-HR	83.25-HR
		(CFS)				
602.	12.50		43.	11.	4.	3.
		(INCHES)	.074	.074	.074	.074
		(AC-FT)	21.	21.	21.	21.

CUMULATIVE AREA = 5.39 SQ MI

*** *** *** *** ***

INTERPOLATED HYDROGRAPH AT LITA2

EAK FLOW (CFS)	TIME (HR)		MAXIMUM AVERAGE FLOW 6-HR	24-HR	72-HR	83.25-HR
		(CFS)				
800.	12.25		377.	122.	44.	39.
		(INCHES)	.650	.844	.916	.932
		(AC-FT)	187.	243.	263.	268.

CUMULATIVE AREA = 5.39 SQ MI

```
---DSS---ZWRITE Unit  71; Vers.   2:  /FLOW SOUTHERN AND HAWES BEFORE S/HAWES CHANNEL PROJ/FLOW/31MAR1997/5MIN/HYDR/
---DSS---ZWRITE Unit  71; Vers.   2:  /FLOW SOUTHERN AND HAWES BEFORE S/HAWES CHANNEL PROJ/FLOW/01APR1997/5MIN/HYDR/
---DSS---ZWRITE Unit  71; Vers.   2:  /FLOW SOUTHERN AND HAWES BEFORE S/HAWES CHANNEL PROJ/FLOW/02APR1997/5MIN/HYDR/
---DSS---ZWRITE Unit  71; Vers.   2:  /FLOW SOUTHERN AND HAWES BEFORE S/HAWES CHANNEL PROJ/FLOW/03APR1997/5MIN/HYDR/
---DSS---ZWRITE Unit  71; Vers.   2:  /FLOW SOUTHERN AND HAWES BEFORE S/HAWES CHANNEL PROJ/FLOW/04APR1997/5MIN/HYDR/
```

RUNOFF SUMMARY
FLOW IN CUBIC FEET PER SECOND
TIME IN HOURS, AREA IN SQUARE MILES

OPERATION	STATION	PEAK FLOW	TIME OF PEAK	AVERAGE FLOW FOR MAXIMUM PERIOD 6-HOUR	24-HOUR	72-HOUR	BASIN AREA	MAXIMUM STAGE	TIME O MAX GE
HYDROGRAPH AT	48	543.	12.50	96.	29.	10.	.77		
DIVERSION TO	D48	535.	12.42	51.	14.	5.	.77		
HYDROGRAPH AT	D48	520.	12.58	53.	15.	5.	.77		
ROUTED TO	CAP3	476.	12.67	53.	15.	5.	.77		
ROUTED TO	BASIN3	67.	13.42	52.	15.	5.	.77		
ROUTED TO	RCAP3	67.	13.42	52.	15.	5.	.77		
HYDROGRAPH AT	49	555.	12.50	100.	30.	10.	.79		
DIVERSION TO	D49	505.	12.33	49.	14.	5.	.79		
HYDROGRAPH AT	D49	555.	12.50	60.	17.	6.	.79		
ROUTED TO	CAP2	530.	12.58	60.	17.	6.	.79		
ROUTED TO	BASIN2	52.	13.58	48.	17.	6.	.79		
ROUTED TO	RCAP2B	52.	13.58	48.	17.	6.	.79		
HYDROGRAPH AT	17A	158.	12.42	30.	10.	3.	.18		
DIVERSION TO	D17A	26.	11.75	6.	2.	1.	.18		
HYDROGRAPH AT	D17A	158.	12.42	28.	8.	3.	.18		
2 COMBINED AT	C17A1	186.	12.50	71.	24.	8.	.97		
2 COMBINED AT	C17A2	206.	12.58	118.	38.	13.	1.74		
ROUTED TO	AT23B	207.	12.58	118.	38.	13.	1.74		
ROUTED TO	AT23A	181.	12.75	117.	38.	13.	1.74		
HYDROGRAPH AT	23	322.	12.08	45.	15.	5.	.28		
DIVERSION TO	D23	187.	11.92	17.	5.	2.	.28		
HYDROGRAPH AT									

	D23	322.	12.08	34.	9.	3.	.28
2 COMBINED AT	C23A	368.	12.17	147.	47.	16.	2.02
HYDROGRAPH AT	17B	211.	12.42	42.	14.	5.	.22
DIVERSION TO	D17B	17.	11.17	7.	3.	1.	.22
HYDROGRAPH AT	D17B	211.	12.42	40.	11.	4.	.22
ROUTED TO	17BT22	210.	12.42	40.	11.	4.	.22
HYDROGRAPH AT	47	802.	12.92	189.	55.	18.	1.67
DIVERSION TO	D47	802.	12.92	128.	34.	11.	1.67
HYDROGRAPH AT	D47	546.	13.25	75.	21.	7.	1.67
ROUTED TO	BASIN4	119.	14.08	75.	21.	7.	1.67
ROUTED TO	RCAP4A	118.	14.25	75.	21.	7.	1.67
ROUTED TO	RCAP4B	118.	14.25	75.	21.	7.	1.67
ROUTED TO	RCAP4C	117.	14.50	74.	21.	7.	1.67
ROUTED TO	RCAP4D	117.	14.58	74.	21.	7.	1.67
HYDROGRAPH AT	22	477.	12.17	73.	24.	8.	.41
DIVERSION TO	D22	71.	11.58	17.	6.	2.	.41
HYDROGRAPH AT	D22	477.	12.17	67.	19.	6.	.41
3 COMBINED AT	C22A	629.	12.25	169.	50.	17.	2.30
ROUTED TO	22T23	624.	12.25	168.	50.	17.	2.30
2 COMBINED AT	C23B	970.	12.25	306.	94.	32.	4.32
ROUTED TO	23T24	930.	12.33	305.	94.	32.	4.32
HYDROGRAPH AT	24	299.	12.25	48.	15.	5.	.29
DIVERSION TO	D24	5.	6.58	4.	1.	0.	.29
HYDROGRAPH AT	D24	299.	12.25	48.	14.	5.	.29
2 COMBINED AT	C24A	1202.	12.33	344.	108.	36.	4.61
HYDROGRAPH AT	50	255.	12.33	45.	15.	5.	.28
DIVERSION TO	D50	227.	12.17	23.	7.	2.	.28
HYDROGRAPH AT							

	D50	255.	12.33	29.	8.	3.	.28
ROUTED TO	CAP1	262.	12.42	29.	11.	7.	.28
ROUTED TO	BASIN1	35.	13.17	28.	11.	7.	.28
ROUTED TO	RBAS1	35.	13.92	28.	11.	7.	.28
HYDROGRAPH AT	18c	438.	12.42	83.	27.	9.	.50
DIVERSION TO	D18c	367.	12.17	34.	10.	3.	.50
HYDROGRAPH AT	D18c	438.	12.42	60.	17.	6.	.50
2 COMBINED AT	C18C	443.	12.42	88.	28.	13.	.78
ROUTED TO	18T24	417.	12.50	86.	28.	13.	.78
2 COMBINED AT	C24	1435.	12.42	421.	133.	48.	5.39
DIVERSION TO	DIVBRD	0.	.00	0.	0.	0.	5.39
HYDROGRAPH AT	BRDHAW	1435.	12.42	421.	133.	48.	5.39
ROUTED TO	RT31B1	1428.	12.42	421.	133.	48.	5.39
ROUTED TO	RT31B2	1402.	12.50	420.	133.	48.	5.39
DIVERSION TO	BASIN9	602.	12.50	43.	11.	4.	5.39
HYDROGRAPH AT	LITA2	800.	12.25	377.	122.	44.	5.39
ROUTED TO	RT31B3	807.	12.25	377.	122.	44.	5.39
HYDROGRAPH AT	31B	455.	12.33	74.	23.	8.	.47
DIVERSION TO	D31B	449.	12.25	41.	12.	4.	.47
HYDROGRAPH AT	D31B	453.	12.33	42.	12.	4.	.47
2 COMBINED AT	C31	1204.	12.42	412.	132.	48.	5.86
DIVERSION TO	D31S	529.	12.42	132.	34.	11.	5.86
HYDROGRAPH AT	D31S	675.	12.42	280.	98.	36.	5.86
ROUTED TO	31WT32	537.	12.75	273.	98.	36.	5.86
HYDROGRAPH AT	D31S	529.	12.42	132.	34.	11.	5.86
ROUTED TO	31T381	516.	12.42	132.	34.	11.	5.86
ROUTED TO	31T382	516.	12.42	132.	34.	11.	5.86

SUMMARY OF KINEMATIC WAVE - MUSKINGUM-CUNGE ROUTING

(FLOW IS DIRECT RUNOFF WITHOUT BASE FLOW)

ISTAQ	ELEMENT	DT (MIN)	PEAK (CFS)	TIME TO PEAK (MIN)	VOLUME (IN)	INTERPOLATED TO COMPUTATION INTERVAL DT (MIN)	PEAK (CFS)	TIME TO PEAK (MIN)	VOLUME (IN)
FOR STORM = 1 STORM AREA (SQ MI) =				.01					
RCAP3	MANE	.57	68.82	805.85	.72	5.00	68.78	805.00	.72

NTINUITY SUMMARY (AC-FT) - INFLOW= .2948E+02 EXCESS= .0000E+00 OUTFLOW= .2948E+02 BASIN STORAGE= .7073E-13 PERCENT ERROR

FOR STORM = 2 STORM AREA (SQ MI) =				1.00					
RCAP3	MANE	.49	67.18	806.03	.71	5.00	67.17	805.00	.71

NTINUITY SUMMARY (AC-FT) - INFLOW= .2902E+02 EXCESS= .0000E+00 OUTFLOW= .2901E+02 BASIN STORAGE= .6993E-13 PERCENT ERROR

FOR STORM = 3 STORM AREA (SQ MI) =				5.00					
RCAP3	MANE	.48	65.08	805.95	.66	5.00	65.07	805.00	.66

NTINUITY SUMMARY (AC-FT) - INFLOW= .2697E+02 EXCESS= .0000E+00 OUTFLOW= .2696E+02 BASIN STORAGE= .7082E-13 PERCENT ERROR

FOR STORM = 4 STORM AREA (SQ MI) =				10.00					
RCAP3	MANE	.64	61.84	805.88	.60	5.00	61.83	805.00	.60

NTINUITY SUMMARY (AC-FT) - INFLOW= .2446E+02 EXCESS= .0000E+00 OUTFLOW= .2446E+02 BASIN STORAGE= .7091E-13 PERCENT ERROR

FOR STORM = 5 STORM AREA (SQ MI) =				20.00					
RCAP3	MANE	.63	58.74	806.20	.53	5.00	58.74	805.00	.53

NTINUITY SUMMARY (AC-FT) - INFLOW= .2195E+02 EXCESS= .0000E+00 OUTFLOW= .2195E+02 BASIN STORAGE= .6962E-13 PERCENT ERROR

* NORMAL END OF HEC-1 ***

```
-----DSS---ZCLOSE Unit:  71,   File: PLAND.DSS
           Pointer Utilization:   .25
           Number of Records:     20
           File Size:     46.9  Kbytes
           Percent Inactive:    .0
```

FLOOD CONTROL DISTRICT OF MARICOPA COUNTY

IN COOPERATION WITH THE CITY OF MESA
PLANS FOR THE CONSTRUCTION OF
HAWES ROAD STORM DRAIN
U.S. 60 TO MAIN STREET
FCD PCN 4420501

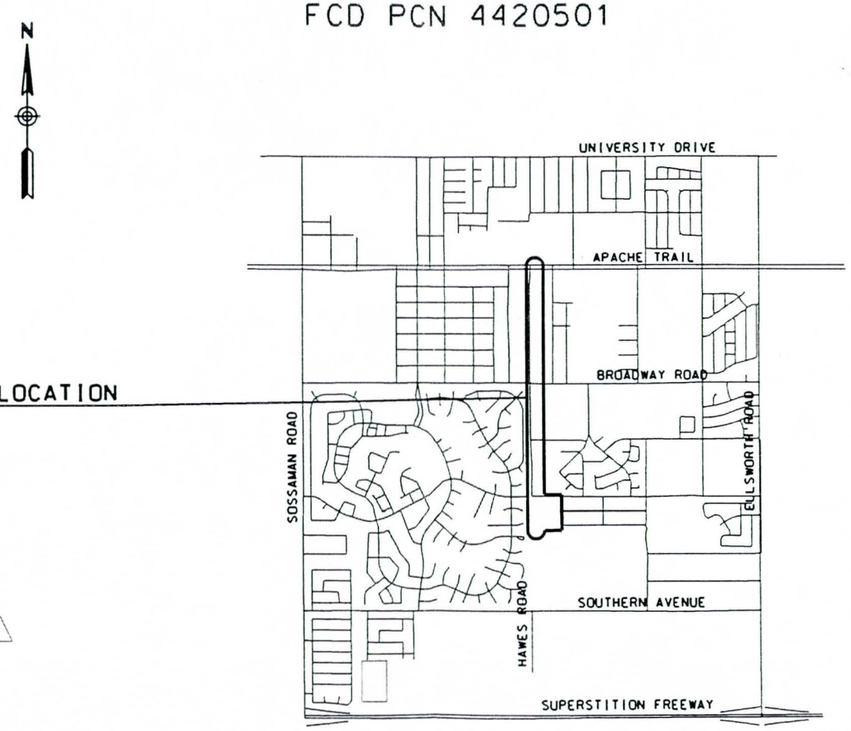

VICINITY MAP
Not to Scale

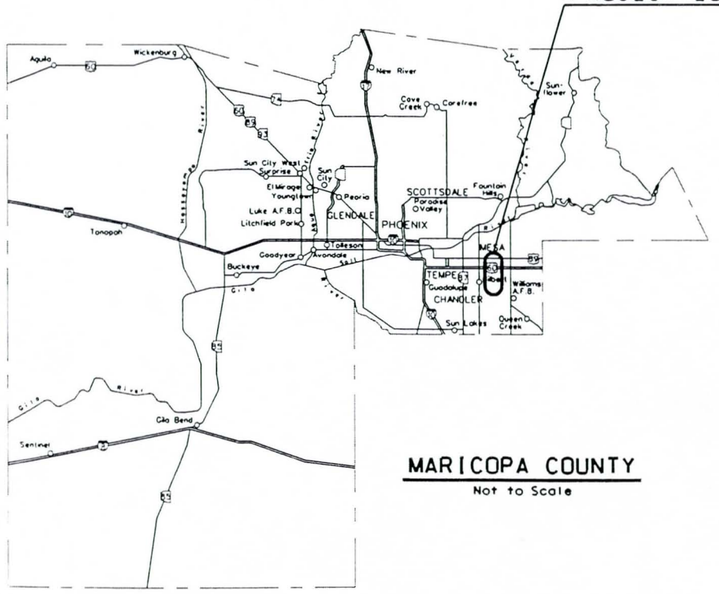

MARICOPA COUNTY
Not to Scale

CITY OF MESA
ENGINEERING DEPARTMENT

DATE

30% SUBMITTAL

FLOOD CONTROL DISTRICT OF MARICOPA COUNTY

ISSUED FOR PUBLIC BIDDING BY:

CHIEF ENGINEER AND
GENERAL MANAGER

BOARD OF DIRECTORS OF
THE FLOOD CONTROL DISTRICT

FULTON BROCK - CHAIRMAN

DISTRICT 1	FULTON BROCK
DISTRICT 2	DON STAPLEY
DISTRICT 3	ANDY KUNASEK
DISTRICT 4	JAN BREWER
DISTRICT 5	MARY ROSE WILCOX

s:\ENG\HawesRd\DGN\HAWESCOV.DGN Aug. 25, 1999 15:00:59

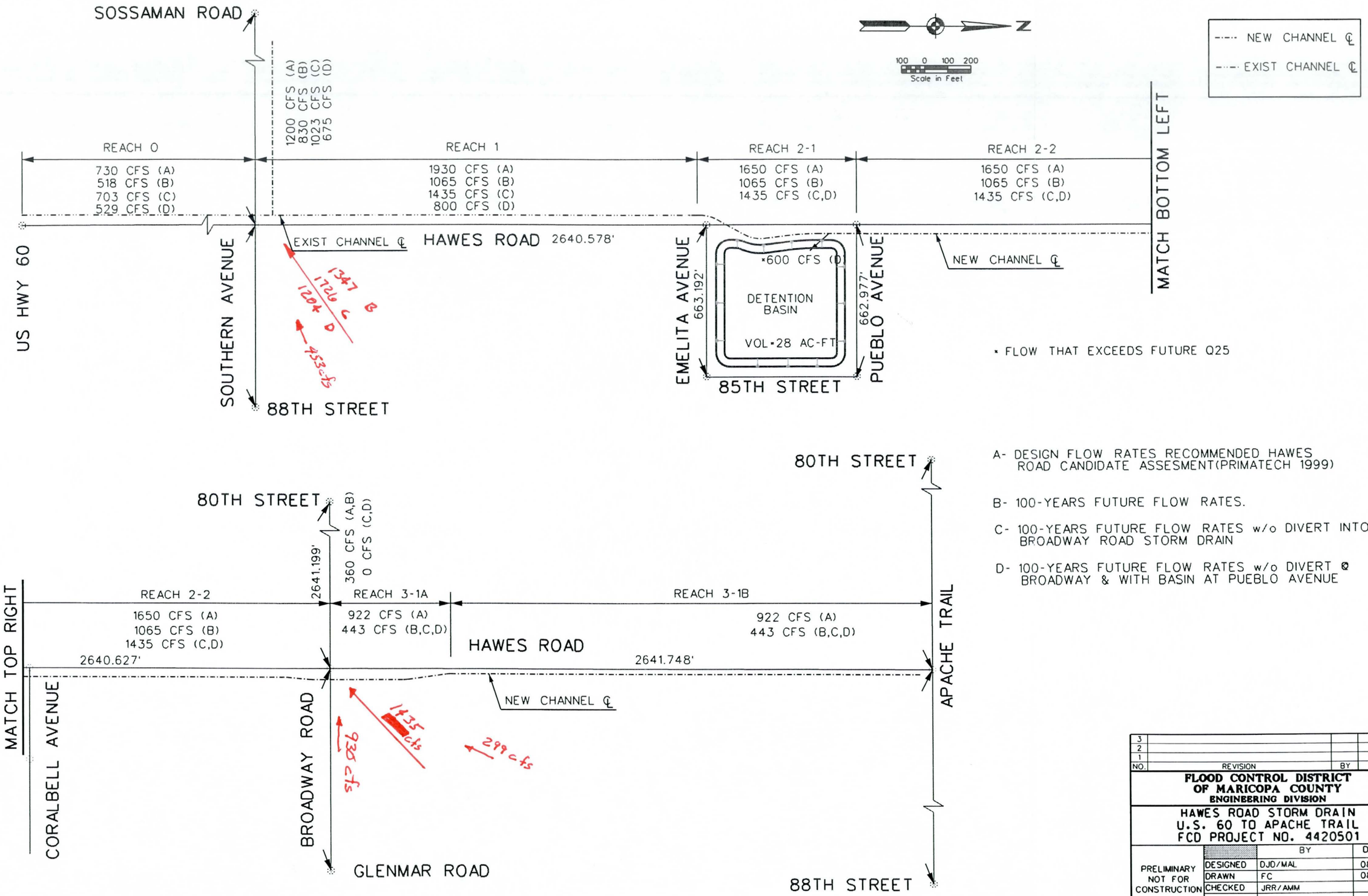

A- DESIGN FLOW RATES RECOMMENDED HAWES ROAD CANDIDATE ASSESMENT(PRIMATECH 1999)

B- 100-YEARS FUTURE FLOW RATES.

C- 100-YEARS FUTURE FLOW RATES w/o DIVERT INTO BROADWAY ROAD STORM DRAIN

D- 100-YEARS FUTURE FLOW RATES w/o DIVERT @ BROADWAY & WITH BASIN AT PUEBLO AVENUE

NO.	REVISION	BY	DATE
3			
2			
1			

FLOOD CONTROL DISTRICT OF MARICOPA COUNTY
ENGINEERING DIVISION

HAWES ROAD STORM DRAIN
U.S. 60 TO APACHE TRAIL
FCD PROJECT NO. 4420501

PRELIMINARY NOT FOR CONSTRUCTION		BY	DATE
	DESIGNED	DJD/MAL	08/99
	DRAWN	FC	08/99
	CHECKED	JRR/AMM	

DRAWING NO. XX | SUMMARY OF DISCHARGES | SHEET 2 OF 4

s:\ENG\HawesRd\DGN\flows.dgn Aug 27 1999 10:08:12

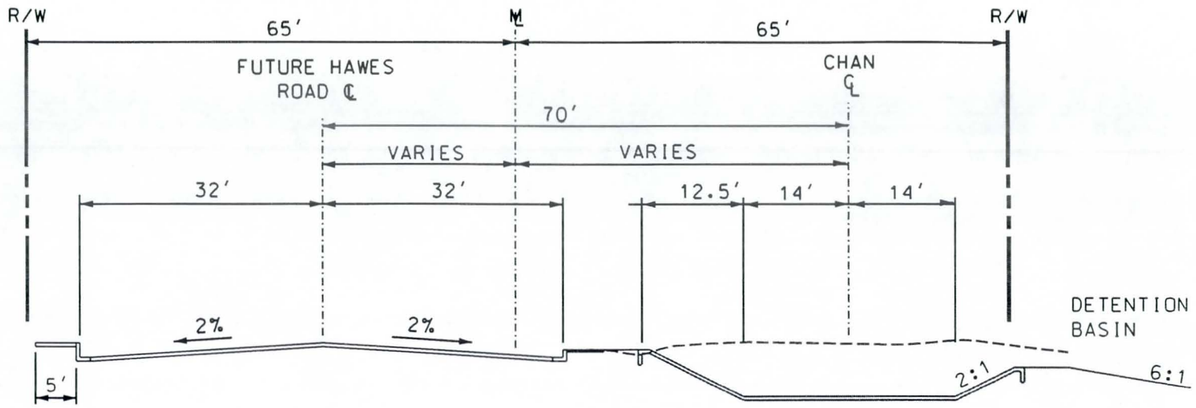

Depth = 6.25
Top Width = 53' min.

REACH 2-1

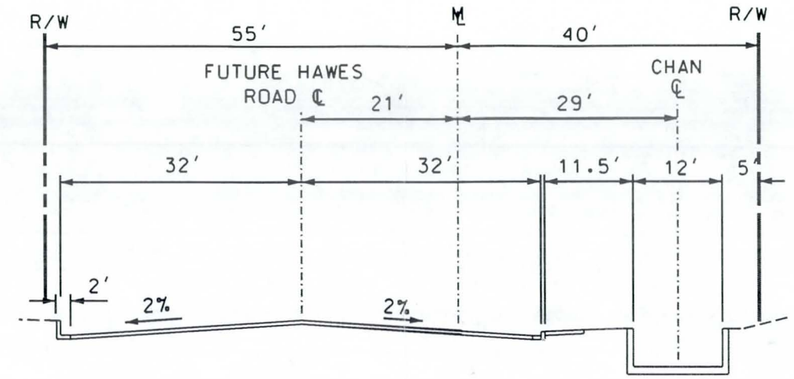

REACH 3-1(A)

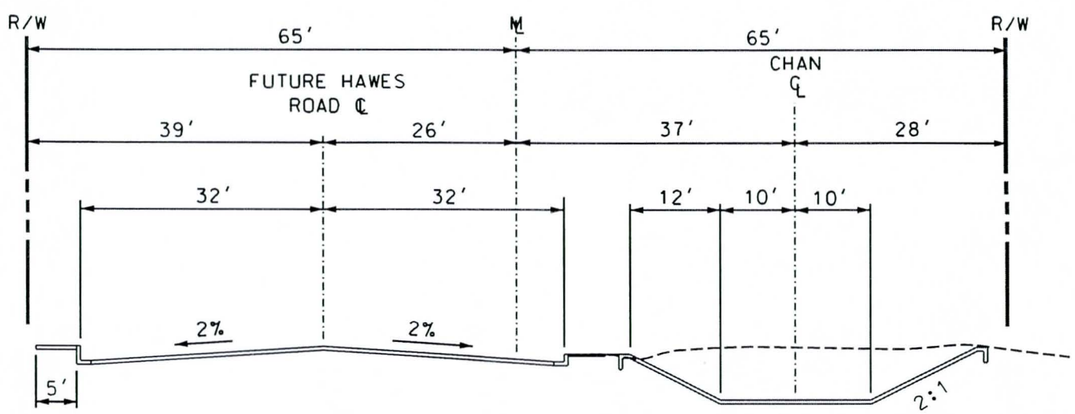

Depth = 6'
Top Width = 44' min.

REACH 2- 2

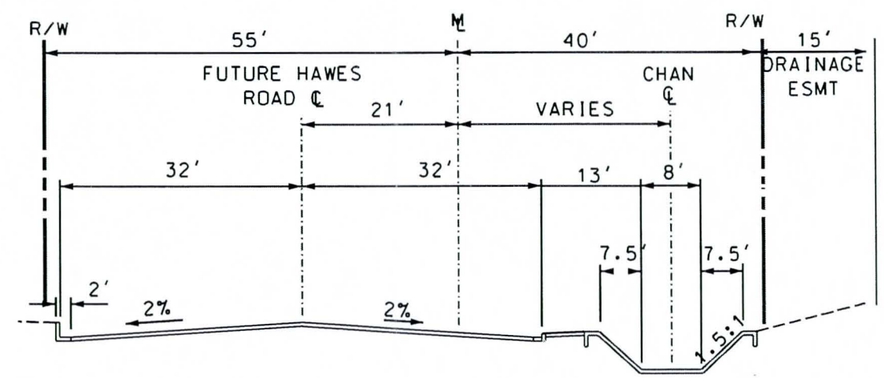

Depth = 5'
Top Width = 23' min.

REACH 3-1(B)

NO.	REVISION	BY	DATE
3			
2			
1			

FLOOD CONTROL DISTRICT OF MARICOPA COUNTY
ENGINEERING DIVISION

HAWES ROAD STORM DRAIN
U.S. 60 TO APACHE TRAIL
FCD PROJECT NO. 4420501

PRELIMINARY NOT FOR CONSTRUCTION		BY	DATE
	DESIGNED	DJD/MAL	08/99
	DRAWN	FC	08/99
	CHECKED	JRR/AMM	

DRAWING NO.	TYPICAL CROSS SECTION	SHEET OF
XX		3 4

s:\ENG\HawesRd\DGN\typsec2.dgn Aug 27 1999 10:07:46

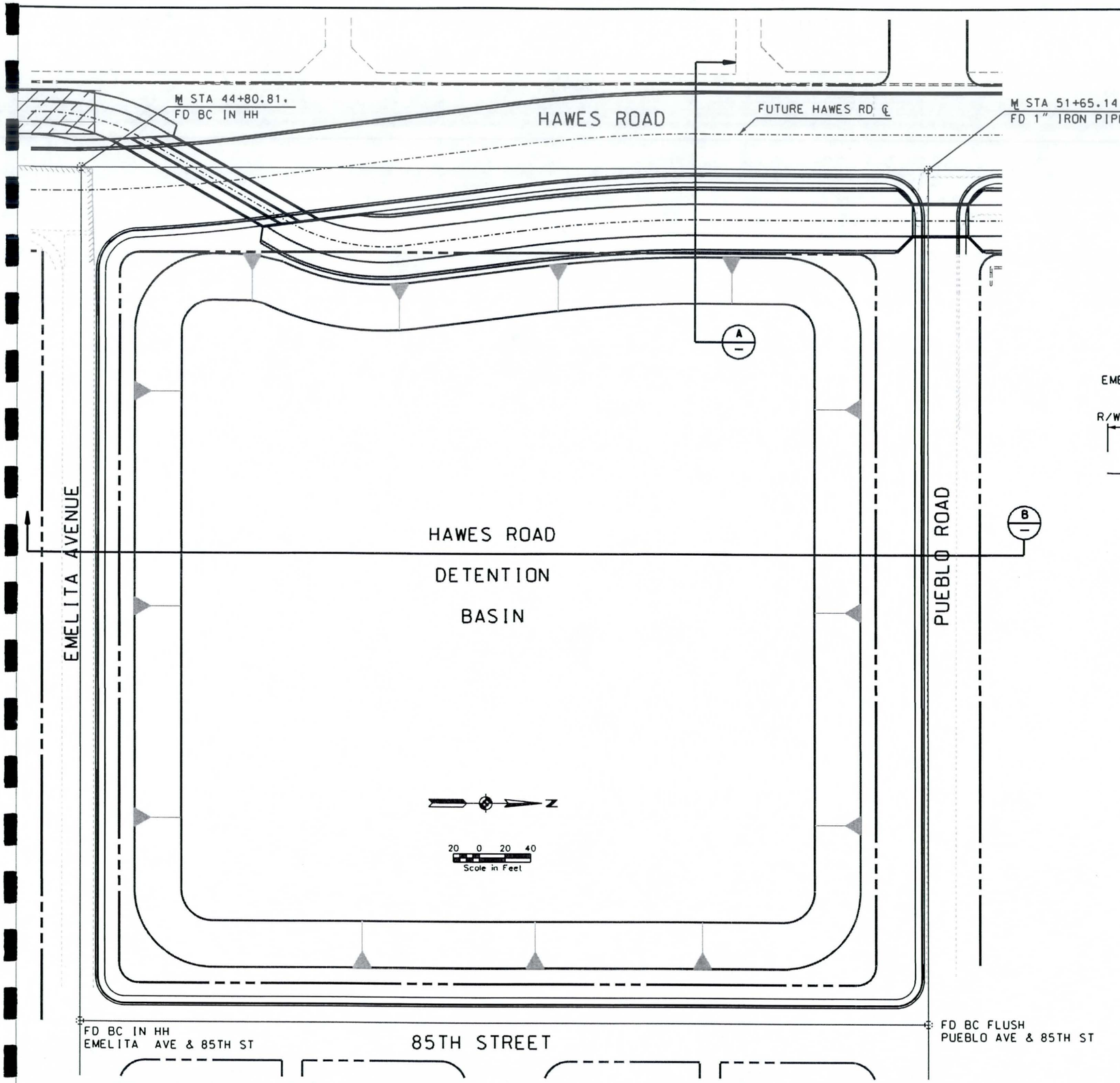

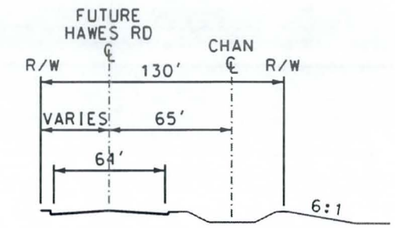

A CROSS SECTION

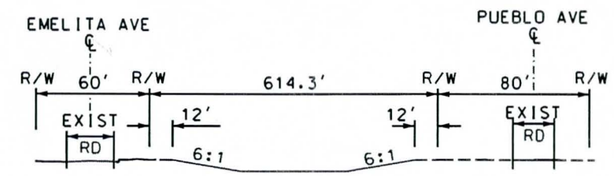

B CROSS SECTION

TWO WORKING DAYS BEFORE YOU DIG, CALL 263-1100 BLUE STAKE

NO.	REVISION	BY	DATE
3			
2			
1			

FLOOD CONTROL DISTRICT OF MARICOPA COUNTY
ENGINEERING DIVISION

HAWES ROAD STORM DRAIN
U.S. 60 TO MAIN STREET
FCD PROJECT NO. 4420501

PRELIMINARY NOT FOR CONSTRUCTION		BY	DATE
	DESIGNED	JRR/MAL	07/99
	DRAWN	FC	07/99
	CHECKED	MAL	

DRAWING NO.		SHEET OF
XX	BASIN GRADING	3 4

\ENG\HawesRd\DGN\hawes-bas.dgn Aug 27 1999 10:08:47