White Tanks FRS No. 3 Outfall Channel
Final Design

FCD 2009C012 - FINAL DESIGN REPORT

Prepared for:
Flood Control District of Maricopa County
2801 West Durango Street
Phoenix, AZ 85009
(602) 506.1501

March 2011

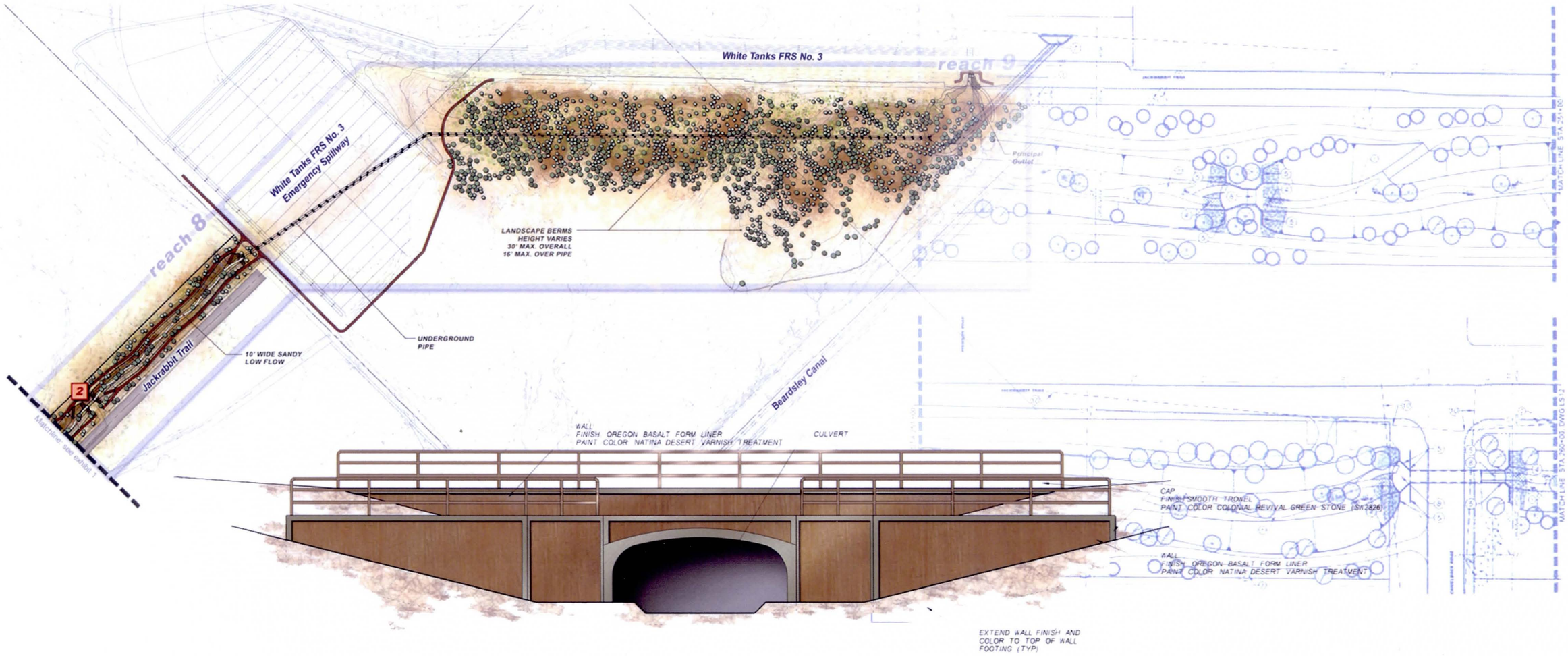

Hoskin • Ryan Consultants, Inc.
creative engineering solutions

6245 N. 24th Parkway, Suite 100 • Phoenix, AZ 85016 • (602) 252.8384

epg JACOBS COOPER AERIAL Alpha Geotechnical & Materials, Inc. Cardno TBE Geological Consultants Inc.

TABLE OF CONTENTS

Executive Summary i
1 Introduction 1
1.1 Stakeholders 3
1.2 Purpose 3
1.3 Value Analysis 3
1.4 Authority for Study 3
1.5 Location of Study 3
2 Design Considerations 4
2.1 FRS#3 Remediation Project 4
2.2 Jackrabbit Trail and Jackrabbit Parkway 4
2.3 Palm Lane and Buckeye Park and Ride 4
2.4 Buckeye Sewer Improvement Project 5
2.5 Principal Spillway and Wasteway 5
2.6 Emergency Spillway 5
2.7 Design Flow Rates 5
2.8 Channel Scour and Erosion Protection 6
2.9 Earth Fissures and Subsidence 7
2.10 Utilities 7
3 Design Elements 9
3.1 Culverts 9
3.2 66-inch and 78-inch Pipes 9
3.3 Grade Control Structures 9
3.4 Screen and Retaining Walls 9
3.5 Side Drainage Inlets 10
3.6 Operations and Maintenance Road 10
3.7 Jackrabbit Trail Conceptual Design 10
3.8 Cross-Street Design 11
3.8.1 Encanto, Virginia, Thomas, and Colter 11
3.8.2 Palm Lane 12
3.8.3 Indian School Road 12
3.8.4 Camelback Road 13
3.9 Utility Design 13
3.10 Grading and Erosion Controls 13
3.11 Structural Design 13
4 Design Description By Reach 14
4.1 Reach 1 14
4.2 Reach 2 14
4.3 Reach 3 15
4.4 Reach 4 15
4.5 Reach 5 15
4.6 Reach 6 15
4.7 Reach 7 15
4.8 Reach 8 16
4.9 Reach 9 16
5 Landscape Design 17
5.1 Site Analysis 17
5.2 Landscape Theme 17
5.3 Landscape Design 17
5.3.1 Channel Form, Alignment Adjustments, and Low Flow Design 18
5.3.2 Preservation of Existing Landscape 18
5.3.3 Tall Pot Trees and Hydroseed 18
5.3.4 Reach 9 Contour Grading and Manhole Access 20
5.3.5 Aesthetic Treatment of Structures 20
5.4 Landscape Schedule 20
6 Meetings and Cost Estimate 21
6.1 Public Meeting 21
6.1.1 Jackrabbit Estates (Arroyo Mountain Estates) 21
6.1.2 Traffic Control 21
6.2 Buckeye Park and Ride Meetings 21
6.3 Stakeholder Meetings 21
6.4 Earthwork Analysis, Utility Meetings, Constructability Review 21
6.5 Right-of-Way 22
6.6 Cost Estimate 22
7 Conclusions 23
8 References 24

REGISTERED PROFESSIONAL ENGINEER (CIVIL)
CERTIFICATE NO. 19690
PAUL W.R. HOSKIN
Date Signed 3-2-11
ARIZONA, U.S.A.

EXPIRES 3/31/2012

TABLE OF CONTENTS (Continued)

Figure 1 Location and Vicinity Map 1
Figure 2 Project Schematic Map 2
Figure 3 Encanto, Virginia, Thomas, and Colter Cross-Section, Looking West 11
Figure 4 Palm Lane, Looking West 12
Figure 5 Indian School Road, Looking West 12
Figure 6 Camelback Road, Looking West 12
Figure 7 Culvert and Drop Structure Aesthetics 19
Figure 8 Proposed Spillway Step Treatment Example 20

Table 1 HEC-1 Model and Design Discharges Summary 6
Table 2 Utilities Contact Summary 7
Table 3 Culvert and Cross-Street Summary 12
Table 4 Design Parameters Summary by Reach 14
Table 5 Native Hydroseed – Dam Mix 18
Table 6 Native Hydroseed – General Mix 19
Table 7 Earthwork Analysis 22
Table 8 Engineer's Estimate 22

Appendix A Product Literature A-1
Appendix B FRS No. 3 Outlet Design Capacity Memorandum B-1
Appendix C URS Emergency Spillway Erosion Evaluation C-1
Appendix D Excavation Monitoring and Inspection Criteria Memorandum D-1
Appendix E Cost Estimate E-1

REGISTERED PROFESSIONAL ENGINEER (CIVIL)
CERTIFICATE NO. 19690
PAUL W.R. HOSKIN
Date Signed 3/2/11
ARIZONA, U.S.A.

EXPIRES 3/31/2012

EXECUTIVE SUMMARY

Hoskin•Ryan Consultants, Inc. (HRC), has been contracted by the Flood Control District of Maricopa County (District) to prepare plans for the construction of the White Tanks FRS No. 3 (FRS#3) Outfall Channel (Figure 1). The District has completed design and construction of the White Tanks FRS No. 3 Phase 1 Remediation and is in the process of constructing the Phase 2 Remediation, which includes a new emergency spillway and outlet control structure.

Currently, the Principal Spillway for the FRS#3 outlets to a manmade drainage way located on the west side of the Beardsley Canal. Completion of the Outfall Channel will provide a channel along the Jackrabbit Trail corridor, to convey the Principal Spillway flows from FRS#3 to FRS#4. The Outfall Channel will extend south to the existing FRS#4 inlet channel located north of McDowell Road. This project lies within the jurisdictions of the Town of Buckeye and unincorporated Maricopa County. Jackrabbit Trail is maintained by the Maricopa County Department of Transportation (MCDOT), and lies within a right-of-way strip of varying dimensions along its length. A right-of-way strip map prepared by HRC documents the existing and proposed rights-of-way and easements for the project limits.

For design purposes, the project was divided into nine different reaches (Figure 2) as described below:

Reach 1: Existing concrete channel from FRS#4 to Palm Lane.

Reach 2: Existing earthen channel from Palm Lane to Thomas Road.

Reach 3: Existing earthen channel from Thomas Road to Osborn Road.

Reach 4: Existing graded earth channel from Osborn Road to Indian School Road.

Reach 5: Existing earthen channel from Indian School Road to Minnezona Avenue.

Reach 6: Underground culvert from Minnezona Avenue to east side of Jackrabbit Trail near Sells Drive. Vacant parcel on east side of Jackrabbit Trail from Sells Drive to Camelback Road.

Reach 7: District property within Jackrabbit Estates from Camelback Road to Missouri alignment.

Reach 8: Vacant parcel from Missouri alignment to Bethany Home Road alignment.

Reach 9: District property across Emergency Spillway to Principal Spillway.

Actual right-of-way corridors and approximate needs were first identified in the 30% Design Report (Ref.40). The District is in the process of completing right-of-way and easement acquisitions for the project as documented herein. In the future, when widening of Jackrabbit Trail is necessary, right-of-way to be owned by the District will be dedicated to MCDOT.

The District formed a Project Aesthetic Advisory Committee (PAAC) for the project, met separately with interested Stakeholders in the area, and held Public Meetings to obtain feedback on the project. Information gathered from these meetings was used by the Project team members in arriving at the Final Design. The Town of Buckeye has been kept informed of the project and are a participant through the pending design and construction of a Park and Ride facility to be located on the west side of Jackrabbit Trail, north of Palm Lane. District staff members have been kept informed of the project's progress through regular monthly meetings and various draft design reports and plans.

At the beginning of the final design stage of the project, a Value Analysis (VA) meeting was held and coordinated by a third party VA specialist (Ref. 53).District staff members, independent engineers, landscape architects and members of the design team participated in a three day design review process. Several of the recommendations received during that meeting were incorporated into the final design, while others were further investigated and then dismissed.

The net result is an approximately five mile long channel and pipe system capable of handling, either the discharge from the FRS#3 Principal Spillway or, the full 100-year flood flows which enter the channel along its length. When complete, the FRS#3 will be capable of being drained completely to FRS#4, and then ultimately to the Gila River via an outfall pipe and channel along the future Loop 303.

The channel will be earthen through Reaches 2 to 8 and piped through Reach 9 to the Principal Spillway. Because of the relatively steep natural grade along its alignment, the channel slope will be controlled by a series of grade control structures. At cross-streets, the channel will pass through box culverts.

Landscape and aesthetics are an important part of any District construction project process. Features such as textures and colors will be integrated into the grade control and headwall structures. Low water-use native plant species will be planted or hydro seeded along the full length of the channel, and rock mulch will stabilize the banks. Landscape mounds will be integrated throughout and water harvesting will be used at discreet locations. Existing mature trees along the length of the project will be protected in place while the new vegetation matures.

Construction of this project will commence in the second quarter of 2011. It is anticipated that elements of the project such as culvert structures, grading, utility relocations, etc. may be built in phases with a total construction schedule of approximately 14 months.

When complete, the channel will be another important link in the flood protection of parts of the west Valley and the Town of Buckeye and will provide a visual and trail amenity to the community. Through the FEMA LOMR process, some of the currently mapped floodplains will be amended and greater flood protection provided to adjacent and downstream residents.

1 INTRODUCTION

Hoskin•Ryan Consultants, Inc. (HRC), has been contracted by the Flood Control District of Maricopa County (District) to prepare final design for the White Tanks FRS No. 3 (FRS#3) Outfall Channel project (Figure 1). The District is in the process of performing rehabilitation to FRS#3 which includes a new emergency spillway. A new Principal Spillway, built as part of the Phase 1 remediation, currently discharges adjacent to the BeardsleyCanal. The project provides a channel along the Jackrabbit Trail corridor, to convey the Principal Spillway flows from FRS#3 to FRS#4. The outfall channel, which lies within the Town of Buckeye and unincorporated Maricopa County, will extend south from the Principal Spillway of FRS#3 to the existing FRS#4 inlet channel north of McDowell Road (Figure 2).

The goals of the project include:

- Provide an outfall for the FRS#3 Principal Spillway flows.
- Intercept and convey the 100-year flood flows reaching the channel to the planned outfall at FRS#4.
- Reduce the effective FEMA 100-year floodplain along Jackrabbit Trail.
- Accommodate the future widening of Jackrabbit Trail.
- Design the facilities to complement the existing and planned future setting through implementation of context sensitive planning and design.
- Provide an opportunity to implement trail linkage as part of the Maricopa County Regional Trail System.

The existing FRS#4 inlet channel is a concrete-lined channel which extends from south of Interstate 10 (I-10) to north of McDowell Road. North of the existing concrete-lined channel, the existing Jackrabbit Channel and Wash are a series of unlined channels and ditches of varying dimensions and capacities. Between Missouri Avenue and the Bethany Home Road alignment, natural drainage patterns cross the Jackrabbit Trail alignment from west to east. From the Bethany Home Road alignment north, to FRS#3, the predominant land slope is east towards the Beardsley Canal.

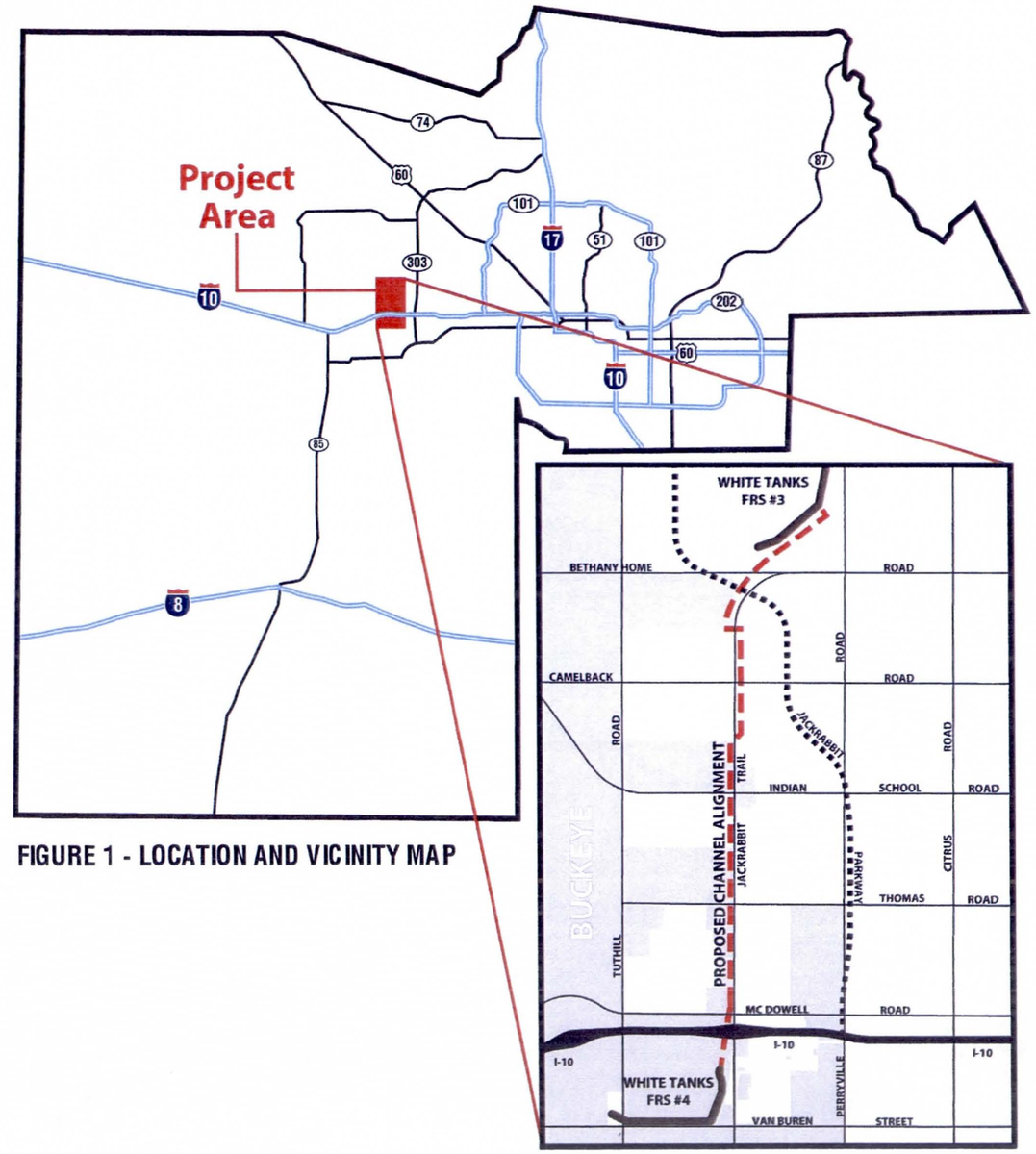

FIGURE 1 - LOCATION AND VICINITY MAP

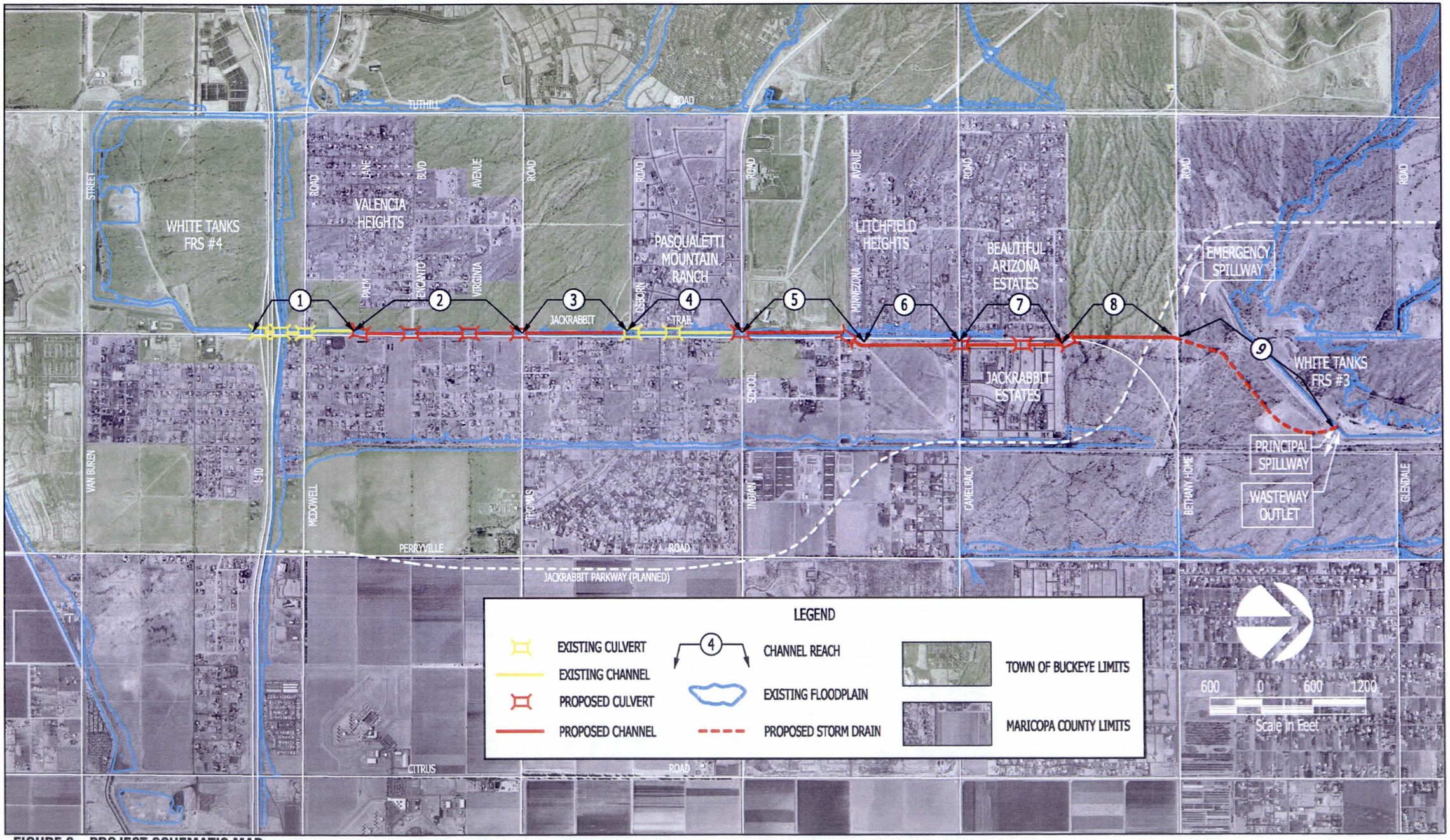

FIGURE 2 – PROJECT SCHEMATIC MAP

1.1 Stakeholders

On-going projects and interested stakeholders include the District, the Arizona Department of Transportation (ADOT), Natural Resource Conservation Service (NRCS), Arizona Department of Water Resources (ADWR), Maricopa County Department of Transportation (MCDOT), the Town of Buckeye, the Maricopa County Municipal Water Conservation District (MWD), existing developments such as Jackrabbit Estates (Arroyo Mountain Estates), Beautiful Arizona Estates, Pasqualetti Ranch, and Litchfield Heights, and private development interests such as DMB White Tanks (Verrado, north of Indian School Road), Missionary Wings located south of Camelback Road and east of Jackrabbit Trails, and South West Value Partners (north of Missouri Avenue).

1.2 Purpose

The *Design Report and 30% Plans* for the White Tanks FRS#3 Outfall Channel project (Figure 1) were completed on June 30, 2009 (Ref. 40) and form the basis for the final design. A *Pre-Design Report* (Ref. 45) which was completed January 29, 2010 documents the re-evaluation of several alternative channel alignments and design approaches that were brought to light as part of the Value Analysis (Ref. 53).

The Pre-Design Report was submitted in conjunction with a *Landscape Architecture Pre-Design Report* (Ref. 13). The30% Plans were prepared without the guidance of a landscape architect, therefore the intent of the Landscape Pre-Design was to identify methods to incorporate landscape materials, aesthetic structural treatments and trail connectivity into the project. The 60% Plans (Ref. 37) were accompanied with a 60% Design Report (Ref. 43).

The purpose of this Final Design Report is to present the engineering design and analysis, and landscape design. Separate reports have been prepared which document the geotechnical analysis, survey, utilities locating, drainage analysis and design, and special provisions for the project (Refs.1, 47, 44, 42).

1.3 Value Analysis

A Value Analysis was conducted for the entire project limits. The purpose of the Value Analysis was to identify alternative design concepts that may have been overlooked in the planning and engineering stages of the project. Results from the Value Analysis are documented in a separate report (Ref. 53). Members of the Value Analysis team voted on ideas of merit; a shortlisted group of concepts further developed, and cost estimates prepared. These concepts were presented to a panel of District personnel and some were eliminated because they did not meet the original intent of the project or they appeared unfeasible. An important recommendation from the Value Engineering Analysis, that was implemented, was the use of HDPE pipe within Reach 9.

1.4 Authority for Study

A detailed Scope of Work was formulated as a part of the contract and proposal process. The District's contract number is FCD 2009C012. The contract number FCD 2010C031 is assigned for the construction project. The official Notice to Proceed date was October 22, 2009 and all work was completed under the direction of The District Project Manager, Gary Wesch, P.E.

1.5 Location of Study

The project lies along Jackrabbit Trail corridor between FRS#3 and FRS#4, from approximately Roosevelt Street to Glendale Avenue. The project is within the jurisdictions of MCDOT, the Town of Buckeye and unincorporated Maricopa County. The immediate watershed area contributing to the channel extends west to Tuthill Road, and north to FRS#3. Additionally, the watershed includes all areas which drain into the FRS#3 from the White Tanks Mountains, east to the Perryville Road alignment and north to McMicken Dam, near the Cactus Road alignment.

2 DESIGN CONSIDERATIONS

2.1 FRS#3 Remediation Project

The District recently completed improvements to the FRS#3 dam as a part of Phase 1 of the *White Tanks FRS No. 3 Remediation Project*(Ref.66). The modifications include strengthening of the dam to mitigate for the potential of a subsidence and fissures near the area, and installation of a new Principal Spillway at the east end of the FRS. The Principal Spillway consists of two (2) 48-inch diameter gated pipe outlets and a riser tower connected to the western pipe. Currently, these pipes would discharge floodwaters along the west side of the Beardsley Canal. The floodwater would flow south and then east, crossing the Beardsley Canal at an existing overchute south of Bethany Home Road.

At the time of design, a stockpile of material excavated from the FRS#3 North Inlet Channel contains 514,000 cubic yards of soil, based upon topography prepared in 2009 (Ref.10).Recent construction of the FRS#3 Phase 2 project has removed portions of this stockpile. The remaining stockpile, along with additional excavation from within the channel, will be used for landscape mounding and screening of the dam. Design of the Phase 2 Dam Remediation Plans (Ref. 67) is complete and construction started in early 2010. The Phase 2 plans include structure modifications to the west end of FRS#3 and grading for a new emergency spillway. The improved emergency spillway will contain the PMF flow and direct it toward the southeast.

Coordination meetings were held with ADWR and NRCS staff regarding any impact the outfall channel design would have on the dam structure, and any permits that may be required.

2.2 Jackrabbit Trail and Jackrabbit Parkway

A recent study by MCDOT (Refs. 12, 13) proposed a new highway, referred to as the Jackrabbit Parkway, which follows an alignment along Perryville Road and then crosses Jackrabbit Trail north of Missouri Avenue. This parkway is in the planning stages and an exact alignment has not been established. In another MCDOT study, the right-of-way width for the Jackrabbit Trail was identified as 130 feet in width; however, Jackrabbit Trail is currently termed as a "Road of Regional Significance" (RRS) by MCDOT, which means that a right-of-way width of 140 feet is desirable. Planning studies by MCDOT indicate that the Jackrabbit Parkway will ultimately assume this designation and Jackrabbit Trail will be re-classified. A procedural step by the Town of Buckeye is necessary to remove the designation of RRS. Discussions should be held with the Town of Buckeye and MCDOT to resolve the ultimate requirements.

2.3 Palm Lane and Buckeye Park and Ride

The Town of Buckeye is currently preparing design plans for a new Park and Ride facility. The Park and Ride will be located on a 6.88-acre parcel (MCR 502-34-017L) on the northwest corner of Jackrabbit Trail and Palm Lane. Palm Lane, which does not currently exist, will provide access to the Park and Ride. A new culvert crossing will be provided at the planned Palm Lane alignment, along with a segment of concrete channel at its outlet. The District has formed an Intergovernmental Agreement (IGA) with Buckeye to coordinate the design and construction of the culvert and channel. Buckeye is working with the adjacent landowner to the south of Palm Lane (Sun Belt Holdings) to provide a roundabout and water and sewer utility crossings. The culvert will be constructed to its ultimate length, however, an interim road cross-section will be constructed for the south half of Palm Lane.

Improvements to be provided by the District include full culvert construction, a storm drainage outlet pipe stub for the site's retention bleed-off(36-inch), joint trench utility conduit, and steel casings to handle possible future utilities. The construction plans indicate a cast-in-place 16'X7' box culvert to be installed at Palm Lane crossing. However, an alternative of (2) 10'X7' box culverts per ADOT Detail B-02.20 could function at this location. To ensure the upstream water surface elevation is contained within banks, debris is assumed to block one foot of each side of the culvert pier.

2.4 Buckeye Sewer Improvement Project

Construction for a sewer extension within Jackrabbit Trail was recently completed by the Town of Buckeye from approximately Roosevelt Street to 1,300 feet north of Indian School Road. As-Built plans were referenced which show the new 12- to 15-inch sewer line (Ref. 80). Stubs were provided at each major street intersection to provide for future lateral extensions to the west. Potential conflicts of these future laterals resulted in design changes to some of the cross-street culvert grades. To avoid future conflicts with sewer laterals, the cross-culvert grades at Thomas Road are elevated. Steel sleeves will be provided with the construction of the Outfall Channel for the future sewer laterals.

2.5 Principal Spillway and Wasteway

The Principal Spillway at the east end of FRS#3 consists of two (2) 48-inch diameter gated pipes which outlet to a walled baffle structure. A riser tower within the flood pool connects to the westerly pipe and will allow for uncontrolled flows, if a closure in the riser is opened. Currently both pipes outlet to a channel along the west side of the Beardsley Canal. The primary goal of the Outfall Channel is to provide conveyance of released flow along Jackrabbit Trail to FRS#4. The west pipe will discharge to the Outfall Channel while the east pipe will serve as a secondary release and/or emergency wasteway. The wasteway will be used if the operation of FRS#4 does not allow a discharge, if construction of the outfall channel is incomplete, or if an earth fissure precludes a discharge to the channel.

A description of the operational characteristics, and the outlet works discharge rating curve, are included in an internal District memo, a copy of which is included in Appendix B. The recommended design discharge of the Principal Spillway is 284cfs, and would occur if the dam capacity is exceeded. An analysis of the wasteway flow was performed as part of the pre-design phase, and is documented in the *Drainage Report* (Ref.44).Results of the analysis indicate that the floodplain resulting from the wasteway flow of 221cfs would be contained on the west side of the Beardsley Canal, crossing to the east at an existing overchute located south of Bethany Home Road (Figure 2). A detailed figure showing the wasteway flow inundation area is included in the Final Drainage Report (Ref. 44).

2.6 Emergency Spillway

The Phase 2 Dam Remediation Plans for FRS#3 (Ref. 67) include structure modifications to the west end of FRS#3 and grading for a new emergency spillway. The improved emergency spillway includes two training dikes, a concrete sill structure, and a 1,000-foot wide graded spillway. The emergency spillway will contain the PMF flow and train it toward the southeast.

The White Tanks FRS#3 Outfall Channel will cross under the emergency spillway via one 66-inch and one 78-inch diameter pipe. These pipes will be encased in a concrete slurry to the finished grade of the emergency spillway. Within a distance of 20 feet downstream of the pipe crossing, the riprap training dikes will be re-constructed and extended from 10 feet to 20 feet below the finish grade following installation of the pipes.

A scour analysis for the emergency spillway crossing was provided by URS under separate contract with the District (Ref.65). The results from their analysis using the SITES model (Ref. 68) are included with this report (Appendix C). Recommendations for the protection of the pipe crossing and training dikes include a riprap apron to a depth of 20 feet and the replacement of the riprap on the dike banks. In order to reduce the total volume of riprap, an alternative using a "Launchable Stone" was provided by the District. The "Launchable Stone" design applies riprap of 7 feet thick to the emergency spillway within a distance of 16 feet upstream and 40 feet downstream of the pipe crossing. The design calculations are included in the Final Drainage Report (Ref. 44).

2.7 Design Flow Rates

Hydrologic analysis for the project is documented in a separate report entitled *White Tanks FRS No. 3 Outfall Channel Final Drainage Report* (Ref. 44). HEC-1 models were prepared for the "existing conditions with CIP" and "future conditions with project-in-place" (Table 1).

Existing conditions and future conditions models for the 10-year and 100-year storm events were created based upon the "existing conditions with CIP" model (ECIP-MB2.dat) and "future conditions with CIP" model (Future_CIP_MB02.dat) from the Loop303/White Tanks ADMPU Area Hydrologic Analysis (the ADMPU AHA) (Refs. 36). Modifications made by HRC include updates to NOAA 14 precipitation, the stage-storage-discharge curve of FRS#3 Principal Spillway, retention volumes, and routing channel geometries (Ref.44).

Table 1: HEC-1 Model and Design Discharges Summary

Reach	Existing Conditions			Future Conditions			Design Discharge (cfs)
	Concentration Point	100-Year (cfs)	10-Year (cfs)	Concentration Point	100-Year (cfs)	10-Year (cfs)	
Reach 1	CPW37	1073	353	CPW38	1549	397	1549
Reach 2	CPW36	931	286	CPW37A	648	222	700
Reach 3	CPW36	931	286	CPW36	664	241	700
Reach 4	CPW35	851	294	CPW35	701	302	700
Reach 5	CPW33	790	293	CPW33	795	360	800
Reach 6	CPW33	790	293	CPW33	795	360	800
Reach 7	CPW28A	507	211	CPW28A	575	81	700
Reach 8c *	CPW28A	507	211	CPW28A	575	81	700
Reach 8b *							500
Reach 8a *							300
Reach 9	WT3	187	13	WT3	195	81	285**

* The flow within Reach 8 varies from 285 cfs at the upstream end to 700 cfs at the downstream end. Two washes with a tributary area of 150 acres each join the channel at Reach 8. Therefore, the flow rate is prorated along Reach 8, with 300 cfs upstream of the first wash, 500 cfs between two washes, and 700 cfs downstream of the second wash.
** Where it is larger than the 100-year HEC-1 flow rate, the Design Discharge equals the design outflow from the Principal Spillway.

The Natural Resource Conservation Services (NRCS) developed Probable Maximum Flood (PMF) hydrographs for various Probable Maximum Precipitations (PMP) using TR-20. The TR-20 model prepared by NRCS was updated by URS for the *White Tanks FRS No. 3 Remediation Project – Phase 1* (Ref. 62). The FRS#3 reservoir routing results for future conditions indicate that the 6-hour local PMP will cause a maximum reservoir elevation of 1216 feet (NAVD 88), with a corresponding Principal Spillway discharge of 284 cfs. As a result, the design discharge for Reach 9 was set at 285 cfs.

2.8 Channel Scour and Erosion Protection

A separate geotechnical report was prepared, entitled *White Tanks FRS No. 3 Outfall Channel Final Design Geotechnical Report*(Ref. 1). The geotechnical report documents the results of field exploration and laboratory testing, describes the subsurface conditions, and includes engineering analysis and recommendations. It also includes a description of the geologic setting, land subsidence and the earth fissure analysis.

The geotechnical report indicates that the project alignment is covered by a sandy and firm loam. Reference was made to the District's Hydraulics Manual (Ref. 20) and HDS 4 – Design of Roadside Channels (Ref. 16) for the permissible velocity. A maximum design velocity of 2.5 fps was specified for sandy loam and 3.5 fps for ordinary firm loam. An average maximum design velocity of 3 fps was used for unlined portions of the channel.

The natural slope along the existing Jackrabbit Channel alignment is steep enough to cause flow velocities in excess of 3 fps. Grade control structures of varying height are used in the design, to provide an overall channel design slope of 0.0010 ft/ft. Documentation regarding channel scour, erosion protection and sediment transport is included in the *White Tanks FRS No. 3 Outfall Channel Drainage Report* (Ref. 44).

Concrete structures and riprap are designed at locations of higher channel velocity and include grade control and culvert structures. The inlets to the culverts and grade control structures are designed to reduce flow efficiency and slow the water by creating an upstream backwater. The higher flow velocities are thus contained within the grade control structures and the downstream energy dissipating basins. Channel velocities are based upon a recently constructed channel condition with little to no vegetation. Along the length of the channel, landscape and aesthetic treatments are incorporated into the design and will help to reduce scour and erosion in the future. The channel hydraulics were evaluated for a range of conditions from immediately following

construction to a fully vegetated condition. Guidance to acceptable vegetative maintenance is provided in the *Operations and Maintenance Manual, Construction Contract FCD 2010C031, White Tanks FRS No. 3 Outfall Channel*(Ref. 83) submitted with this project. The earthen banks of the channel will be protected from local side drainage which causes rill erosion with a combination of rock mulch and hydro seeding.

Side drainage will enter the west bank of the channel along its length during localized precipitation events. In some cases, this flow will be concentrated causing erosion of the channel bank slopes, and consequent head cutting beyond District property. At locations of concentrated flow, side drainage inlets consist of a series of concrete steps of irregular proportions. Riprap adjacent to these structures helps to direct the drainage and facilitate maintenance. In some cases, drainage easements are necessary beyond the project right-of-way, but may be eliminated in the future, if not needed.

2.9 Earth Fissures and Subsidence

A geotechnical report prepared for this project (Ref. 1) documents the geologic setting, land subsidence, and earth fissure potential I the area. A geotechnical investigation performed by AMEC (Ref. 2) as part of the Phase 1 and Phase 2 Dam Remediation Project (Refs. 62,67) indicates that there is the possibility of subsidence and fissures in the area of FRS#3. If subsidence or fissuring were to occur, Reach 9 could be vulnerable, consequently, an HDPE welded seam pipe with a granular bedding is used to provide flexibility. Subsidence risks are discussed further in the Geotechnical Report (Ref.1), and in Section 4.9 of this report.

2.10 Utilities

Details of the utility location, potholing, data collection, conflict locations, and relocations are documented in a separate *Utilities Report* (Ref. 47). Utilities location and potholing were performed by Cardno TBE, in conjunction with HRC. Agencies and utilities contacted include those listed in Table 2.

Table 2: Utilities Contact Summary

Company	Contact	Phone Number
Arizona American Water	Cliff Wahlers	(623) 445-2447
Arizona Public Service	John Rael	(602) 371-6945
Arizona Water Company	Joe Whelan	(602) 240-6860
Cox Communications – Coax	John O'Connell	(602) 770-5778
Cox Communications – Fiber Optic	Randy Simms	(602) 694-1783
Flood Control District of Maricopa County	Gary Maiers	(602) 506-0562
Maricopa Water District	Oney Urquiza	(623) 546-8266
Qwest Communications	Matthew Phillips	(602) 630-1393
Southwest Gas	Valerie Gallardo-Weller	(602) 484-5342
Town of Buckeye	Manuel Alvarez	(623) 349-6800

Utility coordination meetings were held during the final design to coordinate conflict resolution and relocation plans and scheduling. Pothole and existing utility conflict locations are noted on the Design Plans. Utilities to be constructed or relocated on the project are as follows:

Palm Lane
- New electric, and cable, and gas conduit in joint trench by APS, and Cox, and Southwest Gas, respectively, to be installed per this project.
- New steel casing for future water and sewer to be installed per this contract.

Encanto Boulevard
- 2-inch gas line by Southwest Gas.
- 6-inch waterline by Arizona Water Company.
- Two 4-inch fiber optic lines by COX Communications.
- 1-inch telephone line by Qwest.

Thomas Road
- 8-inch waterline by Arizona Water Company.
- Three 4-inch telephone lines by Qwest.
- New steel casing for future water and sewer to be installed per this contract.
- New 10-inch sewer line per this contract.

Indian School Road
- 12-inch private waterline – elevation to be determined by contractor in the field and if necessary, coordinate relocation with owner of private waterline, DMB and Associates.
- 4-inch telephone line by Qwest.
- Four 2-inch power line north of Indian School Structure by APS.

Minnezona Avenue
- 8-inch waterline by Arizona Water Company.
- 4-inch power line by APS.
- 4-inch power line and 2-inch telephone line (joint trench) by APS and Qwest, respectively.
- 4-inch telephone line by Qwest.
- 2-inch telephone line by Qwest.
- 16-inch waterline by Arizona American Water Company.
- Three 2-inch power lines by APS.
- Four 2-inch power lines by APS.
- 8-inch waterline by Arizona Water Company.

Meadowbrook Avenue (Two 48-inch Pipe Culvert Crossing)
- 8-inch waterline by Arizona Water Company.
- 16-inch waterline by Arizona American Water Company.
- 4-inch telephone line by Qwest.

Camelback Road
- 24-inch waterline by Arizona American Water Company.
- 12-inch waterline by Arizona Water Company.
- Gas, Cable, Electric & Telephone lines by Southwest Gas, COX, APS & Qwest, respectively.

Colter Street
- 8-inch waterline by Arizona American Water Company.
- Fiber Optic, Electric & Telephone lines by COX, APS & Qwest
- Gas Line to be abandoned in place.
- Sewer Services to be abandoned in place.
- Power Services to be abandoned in place.

At Palm Lane, utility conduits are provided for future electric, gas and cable at the request of the property owner to the south (Sun Belt Holdings). In addition, in conjunction with the Town of Buckeye's Park and Ride facility, 24-inch steel casings are provided for future water and sewer improvements. While provided for in the Bid Schedule, these are provided as part of an IGA with the Town of Buckeye.

At Thomas Road the owner/developer of the property at the northwest corner agreed to pay for two steel casings across the culvert, one for a future waterline, and the other for a new sewer line to be constructed with this project.

An existing well is located at the northeast corner of the Verrado property, southwest of the intersection of Minnezona Avenue and Jackrabbit Trail. The well is registered with the Arizona Department of Water Resources (Registry ID 588629);however, it is not currently permitted and is not in use. The well will be capped as part of the right-of-way acquisition process through the District.

3 DESIGN ELEMENTS

Hydrologic and hydraulic analysis of the design elements are documented in a separate report entitled *White Tanks FRS No. 3 Outfall Channel Drainage Report* (Ref. 44).

3.1 Culverts

Eleven (11) culverts have been designed where the channel alignment crosses roads. District policy does not allow for funding of the culvert construction to the full build-out length unless there is a project partner. All the culverts accommodate the minimum roadway or right-of-way widths, except at Palm Lane, Thomas Road and Indian School Road where there has been some participation. Most of the include sloped transitions at the culvert inlets in order to reduce the need for grade control structures. Ramps are provided at both the upstream and downstream ends of each culvert.

3.2 66-inch and 78-inch Pipes

A 66-inch and a 78-inch diameter pipe will be used to convey the design discharge of 285 cfs in Reach 9.Two different pipe sizes were selected in order to substantially reduce the shipping costs of the HDPE by "nesting" the pipes during transportation to the site. The pipes will span under the White Tanks FRS#3 emergency spillway, and connect to the channel within Reach 8, just south of the Bethany Home Road alignment. The pipes will be cast-in-place concrete pipe (CIPP) under the emergency spillway, and high-density polyethylene pipe (HDPE) under the landscape berms. Since a portion of Reach 9 lies within a subsidence and fissure risk zone (Ref. 2), there is the potential for long-term differential settlement. The HDPE pipe is used across the fissure risk zone due to its ability to span a fissure or flex during settlement.

Product information for KWH Pipe's Weholite HDPE pipe, a profile-wall pipe, is included in Appendix A. Also included in Appendix A is fire resistance information from two state Department of Transportation's evaluations of HDPE.

Where the HDPE pipes are covered by a landscape embankment, over excavation of the underlying soils is necessary in accordance with the Geotechnical Report (Ref. 1). "Landscape Fill" is used to help screen the dam and is less compacted than around the pipes. "Engineered Fill" will be placed prior to the installation of the pipes in order to ensure good compaction and a trench condition. The maximum depth of the landscape berm over the top of the pipes is 16 feet. Restrictive vegetation areas above the HDPE pipes are identified as four times the pipe depth in order to facilitate future unearthing of the pipe at a side slope of 2H:1V, should the need for repairs arise.

3.3 Grade Control Structures

A total of fifteen (15) grade control structures have been designed within Reaches 2 through 6. The grade control structures are sloped concrete, with down slopes of 6H:1V, and vertical grade changes of two to four feet. Each structure has a concrete sill and riprap apron at the downstream end to minimize flow velocity and erosion. A cross-slope of 18H:1V allows the low flows to be directed to one side of the structure and toward the openings in the downstream concrete sill.

The sloped structures will be used so that maintenance vehicles can drive along the channel uninterrupted. Riprap will be used in the low flow channel at the upstream end of the grade control structures, however, the riprap will be grouted to allow vehicle access.

3.4 Screen and Retaining Walls

Retaining walls are used where the right-of-way is narrower than desirable to meet both the hydraulic conveyance and the landscape and aesthetic goals of the project. Within the Jackrabbit Estates (Arroyo Mountain Estates) subdivision, retaining walls are necessary at three existing knuckles. Walls two (2) and three (3) feet in height are specified and railings are provided for heights in excess of two feet.

The landscaping within Jackrabbit Estates has become well established since its installation and after meeting with the HOA, it was determined that it is desirable to maintain the look and feel of the development. The

HOA expressed a desire to not have public access along this Reach of the channel. In order to minimize construction impacts to the existing landscape and perimeter walls, retaining walls are used to protect portions of the existing wall. Visibility from Jackrabbit Trail is improved by replacing the top portions of the perimeter wall with iron fencing.

Access for landscape maintenance purposes is provide on both sides of the wall that separates the channel from Jackrabbit Estates. Because the channel right-of-way is very limited, only a five (5) foot bench is available. An easement will be provided to the District and the HOA for maintenance of the wall. Gates will be provided from 194thAvenue for access to the top of channel bank.

3.5 Side Drainage Inlets

Local washes and drainage from the west enter the current channel along Jackrabbit Trail. Concrete spillways are designed at points of major inflow. Specific design computations are addressed in the Drainage Report (Ref. 44). Side drainage inlets for flows greater than 60 cfs consist of a concrete stepped structure of irregular proportions and finish. Loose rock riprap is placed at the upstream ends of the inlets and the steps to help to dissipate the energy from the flow as it descends the slope. Where possible, the spillways are designed to coincide with the grade control structures. Side drainage inlets for flows less than 60 cfs are of grouted rock riprap.

3.6 Operations and Maintenance Road

Where existing or acquired right-of-way allow, the Operations and Maintenance (O&M) road meanders to align with the side slope contours and is located at the top of channel slope on both sides. This occurs between Indian School and Camelback Road (Reach 5 and 6), and north of the Missouri Avenue alignment, (Reach 8). South of Indian School Road (Reach 1 through 4) the O&M road lies adjacent to Jackrabbit Trail, along the east side of the channel. Within the Jackrabbit Estates development (Reach 7) the O&M road lies adjacent to Jackrabbit Trail, along the west side of the channel.

The O&M road serves as the Multi-Use Trail for a portion of the project (Reach 1 to Reach 5 and Reach 8) and will ultimately provide a connection to the Maricopa Regional Trail, Segment 35 (Ref.50).Fencing, gates, or removable bollards are specified to limit access to the channel and yet still maintain the trail use. The O&M road is asphalt paved from the commencement of the project, just south of Palm Lane, northward to the Bethany Home Road alignment. Where the O&M road is located on both sides of the channel, only one side is paved. Ramps into the channel bottom are aggregate base (AB).

Access to the O&M road is provided from Jackrabbit Trail with entrances located at least 100-feet north or south of the intersecting cross-streets. This design concept was discussed with MCDOT and the Town of Buckeye. A regional trail will share use of the O&M road, except near the cross-street intersections, and within Reaches 6 and 7. Non-vehicular users will be directed toward the future intersection curb returns. In these cases, the trail consists of an AB or decomposed granite (DG). At Jackrabbit Estates, O&M access is provided from either Jackrabbit Trail, Colter Street, or from 194th Avenue within the subdivision.

For the area north of Bethany Home Road, the existing DG trails will remain in place, as installed from the Phase 2 Remediation. In one location east of the emergency spillway, in order to accommodate the landscape re-grading and mounding, the road will be relocated. This has been coordinated with the Phase 2 construction, so that the DG surface is placed as part of this project. In order to provide access to the Reach 9 pipe manholes, new DG trails are provided from the main O&M road and include 30-foot wide turnaround areas.

3.7 Jackrabbit Trail Conceptual Design

To aid in determining elevations adjacent to the channel and at the roadway crossings, conceptual centerline and gutter elevations were prepared for Jackrabbit Trail (Ref. 48). The goal was to adhere as closely to the existing centerline grade as possible, while recognizing existing low points and grade breaks within the Jackrabbit Trail corridor. Top of curb elevations were based on a 38.5-ft centerline to back of curb cross-section, with a street cross slope of 2.0%. A projected gutter elevation was used to compute grades at the intersections of

minor and major roadways. This elevation was then used to determine future road grades above the box culvert crossings. Tie-in grades to the east and west are shown at roadway intersections. At the culvert crossing of Jackrabbit Trail north of Sells Drive, the culvert grade was raised in order to avoid a future sewer crossing. The amount of pavement removal and replacement was minimized by keeping a shallow cover on the top of the culvert.

Jackrabbit Trail within Reach 8 does not exist, however, the alignment will be graded in order to help contain the channel flows and provide a base for the future roadway. The centerline grade is raised above natural grade to provide cover over the box culvert north of Jackrabbit Estates.

Right-of-way elevations were assumed based on top of channel bank elevations. Channel grades adjacent to Jackrabbit Trail were checked at selected locations including drop structures and areas of landscape preservation.

3.8 Cross-Street Design

Roadway widths either match the existing width or provide a minimum of one lane of traffic in each direction and a 10-foot clear zone to the culvert headwalls. Widening the roadway crossings to allow for opposing left turn lanes at the intersections with Jackrabbit Trail was not considered.

3.8.1 Encanto, Virginia, Thomas, and Colter

For roadway sections which utilize curb, gutter and sidewalk (Encanto Boulevard, Virginia Avenue, Thomas Road and Colter Street) the outside edge of headwall will be placed three feet behind the back of sidewalk to allow for a joint use trench for dry utilities (Figure 3). These minimum dimensions are based on the Town of Buckeye Draft Local Road Section Detail 9015 (Ref. 55). The Town of Buckeye criteria was selected since many of these streets either fall within their jurisdiction or are nearby within Maricopa County right-of-way.

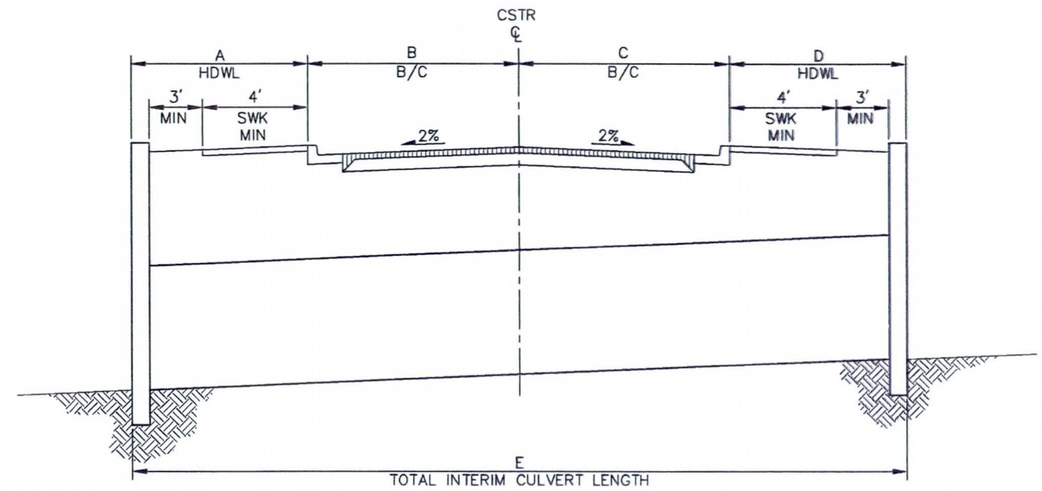

FIGURE 3 – Encanto, Virginia, Thomas, and Colter Cross-Section, Looking West

In order to accommodate 24-inch diameter steel casings for future utility extensions, as detailed in the Utility Report (Ref. 47), Virginia Avenue, Palm Lane, and Thomas Road culverts were elevated at their upstream inverts. A stepped drop structure, similar to those used on the side drainage inlets, is used to minimize the need to increase the downstream culvert length (Figure 3, Dimension A). A vertical grade change was preferred over a sloped transition to maintain the culvert aesthetic treatment and to minimize the amount of retaining wall used. This design change does mean that maintenance vehicles will need to gain drivable access to these culverts from the upstream end.

For the culvert at Virginia Avenue, the culvert was raised 3.5 feet from the 60% design to help eliminate a 2.0 feet sloped inlet drop and 1.5 feet of drop in the next upstream grade control structure. For the culvert at Thomas Road, the culvert was raised 3.0 feet from the 60% design to help eliminate a 2.0 feet sloped inlet drop and 1.0 feet from the next upstream grade control structure.

Table 3: Culvert and Cross-Street Summary

Cross-Street	A	B	C	D	E
Palm Lane	20'	24'	34'	12'	90'
Encanto Boulevard	6'	20.5'	20.5'	6'	53'
Virginia Avenue	8'	16'	16'	8'	48'
Thomas Road	8'	10'	22'	8'	48'
Colter Street	10.5'	20.5'	20.5'	10.5'	62'
Indian School Road	60'	15'	9'	68'	152'
Camelback Road	30'	---	51'	24'	105'

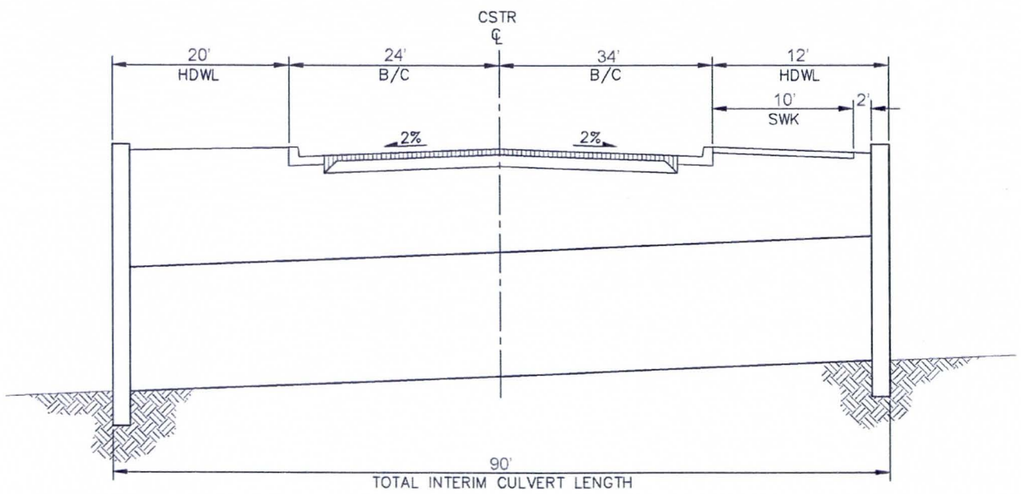

FIGURE 4 – Palm Lane, Looking West

3.8.2 Palm Lane

The street cross-section at Palm Lane (Figure 4) was determined by the Town of Buckeye in conjunction with a new Park and Ride facility on the northwest corner. The south lanes of this road are planned to be widened in the future as part of a development agreement with Sun Belt Holdings, the adjacent parcel owner to the south of Palm Lane. The culvert length at Palm Lane was determined by an intergovernmental agreement between the District and the Town of Buckeye.

3.8.3 Indian School Road

Additional consideration for extending the culverts was given at Indian School Road. The Verrado development and the District reached an agreement to extend the culverts to accommodate the full intersection at Indian School Road and Jackrabbit Trail. This includes six through lanes, two left-turn lanes, and one right-turn lane on Indian School Road.

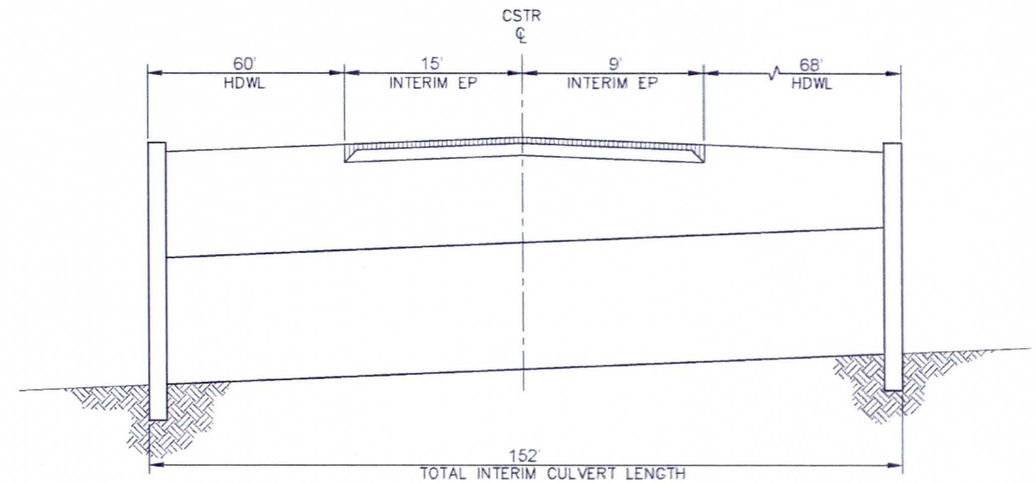

FIGURE 5 – Indian School Road, Looking West

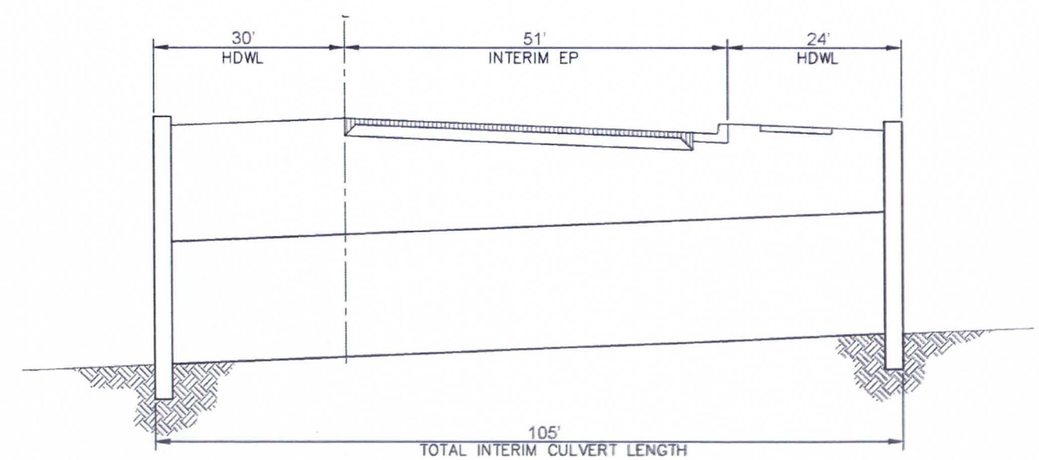

FIGURE 6 – Camelback Road, Looking West

3.8.4 Camelback Road

Camelback Road has existing curb and gutter improvements on the north side and has a thickened edge along the south side. While the existing right of way on the north side of Camelback Road is 65-feet, there is an adjacent drainage tract that includes a raised pad/retaining wall for utility equipment. The culvert is extended 10-feet beyond the right of way to accommodate the existing utility easements and to align with the existing retaining wall (Figure 6). On the south side, a clear zone of 30feet is necessary from the edge of the thickened edge pavement to the headwall structure.

3.9 Utility Design

A Utility Report (Ref. 47) provides details on the various utility crossings encountered during the field survey and pothole stages of the design. The Design plans were provided to utility companies and Utility Coordination Meetings held. Utility relocations will occur at most of the major street crossings and will be performed outside of this design project. Steel casings were considered for the major east-west street crossings of the channel and across Jackrabbit Trail, but were eliminated due to a lack of a funding source. Casings are provided at Palm Lane due to funding agreements.

3.10 Grading and Erosion Controls

Detailed Grading and Drainage Plans are included with the Design Plans and illustrate the design contours. The grades shown are the finished grades including the thickness for Rock Mulch, Paving and Riprap. Rock Mulch is provided on the side slopes of the channel and extends two (2) feet into the channel bottom. On the west channel side slope (west side of Jackrabbit) the Rock Mulch extends to the west right-of-way boundary and on the east side it adjoins the O& M road, and meanders beyond as shown on the Landscape Plans.

Landscape mounding is provided within the Reach 9 area, south of the dam. This grading is designed to help screen the dam from view, but will not be a part of the dam structure. The mounding helps to direct surface runoff from the dam face and the mounds, toward one of two pipe culverts which cross the Reach 9 pipe system. The outlet of these cross-pipe culverts are shallow retention basins located on District property.

The landscape mounding provides a location for the "wasting" of excess fill material generated along the channel's length and from within the existing stockpile located south of the Principal Spillway. Earthwork analysis (Section 6) shows that additional material may be available from the channel in excess of the landscape requirements. Any excess material could be wasted in this general area, however, caution must be exercised to ensure that emergency spillway flows are not blocked. Ongoing construction of the FRS#3 Phase 2 Remediation has resulted in the use of some of the stockpile material. Ultimately, new stockpiles may result east of the Emergency Spillway, if Phase 2 excavation within the flood pool produces additional soil material. No stockpile material will be placed within a 100 foot zone centered on the Reach 9 pipes.

3.11 Structural Design

The structural design of culvert structures, grade control structures, and retaining walls are addressed with structural design computations prepared by Jacobs (Ref. 81).

4 DESIGN DESCRIPTION BY REACH

The FRS#3 Outfall Channel provides a means to drain floodwaters impounded within the reservoir behind the dam. The conveyance channel extends south from the Principal Spillway at FRS#3 to the existing FRS#4 inlet channel north of McDowell Road. The downstream end of the channel connects to an existing concrete-lined channel approximately 1,300 feet north of McDowell Road. This channel originates at FRS#4 on the south side of I-10, and transitions across the I-10 on- and off-ramps through concrete box culverts. From approximately 60 feet south of the Bethany Home Road alignment, the channel transitions to a 66-inchand a 78-inch diameter pipe. The pipes cross the emergency spillway, which is under construction, and then parallel the dam before ending at a basin just downstream of the Principal Spillway. Connection to the main outflow pipe at the Principal Spillway is via a rectangular concrete channel section.

The project has been divided into nine (9) Reaches, each of which has its own channel cross-section and right-of-way requirements. Each of the Reaches is described below, and the major design parameters are summarized in Table 4.

Table 4:Design Parameters Summary by Reach

Channel Reach	Design Flow Rate (cfs)	Bottom Width (Ft)	Topwidth (Ft)	Max. Side Slopes (H:V)	Flowline Slope (Ft/Ft)
Reach 1	1549	30	92	4:1	0.0010
Reach 2	700	30	86	4:1	0.0010
Reach 3	700	30	102	4:1	0.0010
Reach 4	700	40	108	4:1	0.0015
Reach 5	800	40	106	4:1	0.0010
Reach 6	800	40	115	4:1	0.0010
Reach 7	700	30	86	4:1	0.0007
Reach 8	700	30	86	4:1	0.0010
Reach 9	285	66-inch and 78-inch Pipes			0.0013

4.1 Reach 1

Reach 1 extends from the FRS#4 inlet channel, upstream to a point approximately 1,300 feet north of McDowell Road. The existing FRS#4 inlet channel is concrete-lined and trapezoidal in shape, and is located within District or ADOT right-of-way. Future widening of the Jackrabbit Trail/I-10 interchange could result in replacement of portions of the channel with an underground conduit.

Removal and replacement of approximately 250 feet of the existing channel, south of Palm Lane, will be necessary in order to remove an existing concrete drop structure, re-align the channel, and meet new culvert grades at Palm Lane. The replacement channel will commence upstream of an existing channel access ramp.

4.2 Reach 2

Reach 2 extends from the south side of Palm Lane, north to the south side of Thomas Road, along the west side of Jackrabbit Trail. The channel is unlined with grade control structures, and a design slope of 0.0010 ft/ft. The District owns a 138 feet wide strip of right-of-way through this reach; however, future dedication of a full 65 feet of half-street right-of-way to MCDOT will reduce this to 129 feet. Construction of the O&M road is limited to the east side of the channel.

The District and the Town of Buckeye have entered into an Intergovernmental Agreement (IGA) for the construction of a new culvert at the Palm Lane alignment. Construction of the culvert will be performed by the District. The paving of Palm Lane will constructed by the Town of Buckeye as a part of the new Park and Ride Facility to be located on the northwest corner of Jackrabbit Trail and Palm Lane. Buckeye requested the placement of this culvert as close to the west right-of-way line as possible, therefore the concrete channel makes a westward alignment shift.

Culvert structures will be built at the future alignments of Encanto Boulevard and Virginia Avenue. Prior agreements made by the District include the construction of pavement, curb, gutter and sidewalk at these two crossings. Currently there are no paved roads at either location. Both of these culverts and roads are at the

ultimate anticipated pavement in accordance with the Town of Buckeye's current standards (Ref.57). Traffic barricades will be installed within the new pavement of Virginia Avenue and remain until the roads are extended.

4.3 Reach 3

Reach 3 extends from the south end of the Thomas Road culvert crossing, north to the south end of the Pasqualetti Mountain Ranch subdivision, within an existing 129 foot-wide right-of-way. An existing grouted riprap channel transition at the south end of Pasqualetti Mountain Ranch will be removed to make way for the new earth-lined channel.

4.4 Reach 4

Reach 4 runs through the Pasqualetti Mountain Ranch and extends north to the south side of Indian School Road. An existing channel spans the reach, except for approximately 700 feet at the north end. There are existing concrete box culverts with drop structures at Osborn Road and Clarendon Avenue. The right-of-way in this area is limited by the existing subdivision. Existing channel and culvert structures remain, however enhanced landscape will be provided along with Rock Mulch, consistent with other design reaches. The existing road right-of-way is 65 feet and no additional acquisition is necessary.

4.5 Reach 5

Reach 5 extends from Indian School Road to south of Minnezona Avenue, through the Verrado Phase 3 property. Full right-of-way acquisition of 214 feet is included, except a right-of-way strip adjacent to Jackrabbit Trail for the future road right-of-way to 65 feet, is not included. At the north end of this reach (Sells Road), the main channel transitions to concrete box culverts under Jackrabbit Trail. In addition to the main channel flow, there are two more localized drainage flows which confluence just north of Sells Drive.

A berm and channel collect drainage from the north and west and direct it eastward toward Jackrabbit Trail. In addition, a local collection channel along the west side of Jackrabbit Trail intercepts runoff generated within the Litchfield Heights subdivision and conveys it south. This local channel extends from Sells Road to approximately 300 feet north of Meadowbrook Avenue. The two tributary drainage flows confluence with the outlet of the box culvert within Reach 6 at a basin north of the Sells Road alignment. The two tributary flows enter the basin above the proposed channel invert, therefore two spillway structures are used. The basin located at the confluence of these three flows provides for some sedimentation.

There is an existing well at approximately Station 230+00. The well is registered with the Arizona Department of Water Resources (Registry ID 588629), however it is not currently permitted and is not in use. The well has been abandoned as part of the right-of-way acquisition process through the District.

4.6 Reach 6

Reach 6 extends from an outfall on the west side of Jackrabbit Trail, near Sells Road, north to Camelback Road. The channel in Reach 6 lies on the east side of Jackrabbit Trail within a property referred to as Missionary Wings. Right-of-way acquisition on this property includes 214 feet for drainage and an additional 10 feet for future road widening. A grade control structure is located at Station 251+80, in alignment with the existing Pierson Street and could later be replaced if an entrance is required in the future.

The channel east of Jackrabbit Trail connects to the basin west of Jackrabbit Trail through one (1) 16'x7' Concrete Box Culvert approximately 900 feet in length. A cross-drainage culvert (2-48-inch pipes) north of Meadowbrook Avenue conveys flow from the west side of Jackrabbit Trail to the channel. A sediment basin will be constructed at the entrance to these culverts.

4.7 Reach 7

Reach 7, which is located on the east side of Jackrabbit Trail, north from Camelback Road, through the Jackrabbit Estates (Arroyo Mountain Estates) subdivision, to the Missouri Road alignment. The District acquired portions of multiple platted lots within the subdivision from the developer, Shea Homes. The pads for each lots are graded, and rear and sideyard retaining walls built. A perimeter theme wall and landscape exist around the

perimeter of Jackrabbit Estates, and this will remain intact. Water and sewer service taps and electric lines are no longer required and will be abandoned or removed.

The channel within Reach 7 is unlined, and includes culvert crossings at Camelback Road and Colter Street. A sloped inlet will be built at the Camelback Road culvert crossing. The right-of-way width available within Reach 7 limits the amount of channel meander and bottom width. The O&M road lies along the west side of the channel. Retaining walls are required at several locations due to the limited right-of-way. In order to minimize the impacts to the existing landscaping and perimeter walls, retaining walls will be constructed at some locations. An existing culvert which crosses 194th Avenue, within Jackrabbit Estates, will be plugged at its west end.

4.8 Reach 8

Reach 8 extends from the north side of Jackrabbit Estates (Missouri Avenue) to Bethany Home Road. The channel within Reach 8 is unlined, and ties into66-inch and 78-inch pipes that cross under the emergency spillway within Reach 9. The channel crosses Jackrabbit Trail to the west side through (2) 10'x7' box culverts. A diagonal portion of right-of-way crosses through property currently owned by the Maricopa County Municipal Water District. This right-of-way acquisition is designed to integrate with preliminary site plans for the property which includes a planned residential subdivision called Zanjero Trails.

On the west side of Jackrabbit Trail, the channel is unlined with a slope of 0.0010 ft/ft. The right-of-way requirement consists of 214 feet for drainage and 10 feet for future road widening. Currently, Jackrabbit Trail does not exist in this location. The future Jackrabbit Parkway will cross the channel south of Bethany Home Road. Culverts will be required at this crossing in the future, however this roadway is only in the planning stages and its alignment is not set.

4.9 Reach 9

Reach 9 extends from Bethany Home Road, northeast and parallel to the FRS#3 dam, to the Principal Spillway located just west of the Beardsley Canal. The property is owned by the District, therefore no additional right-of-way acquisition is necessary. A permit for a structural connection to the Principal Spillway is required by ADWR, and the design is in conformance with ADWR and NRCS criteria. The pipes, fill, and embankment penetrations across the emergency spillway are designed so they do not adversely affect the spillway operation, with consideration for TR-60, TR-67, and SITES modeling (Refs. 69,70,68).

Within Reach 9, a 66-inch and a 78-inch diameter pipe convey the flow from the Principal Spillway under the emergency spillway, and outlet to an earthen channel in Reach 8, downstream of the emergency spillway. The pipes across the emergency spillway will be constructed from concrete since a flexible pipe would not meet the design requirements in this area. The pipes will be bedded and capped with a controlled low strength material (CLSM) to reduce flotation and protect against erosion from spillway flows.

The pipes east of the emergency spillway will be constructed from a welded-seam HDPE pipe within a flexible bedding to allow for flexibility within the fissure risk zone. The design slope is increased to accommodate future long-term subsidence. Monitoring of long-term movement will require periodic measurements to the pipe invert at benchmark manhole locations (Ref. 82).

The Principal Spillway consists of two 48-inch diameter gated pipes which currently outlet to an unimproved channel along the west side of the Beardsley Canal. Flow from the west Principal Spillway pipe is directed to a basin via a rectangular concrete channel. The outlet from the basin is into a 66-inch and 78-inch pipe. An overflow notch weir is sized to allow overtopping if the pipes' capacity is exceeded, however, overtopping of the weir would not occur with the design discharge of 285 cfs.

The east Principal Spillway pipe remains as a wasteway which could be operated if the downstream outfall channel is not complete, or if FRS#4 is unable to accept additional floodwaters. Outflow from this pipe is directed east, via grading and landscape mounding, to its current flow path. Riprap is at the outlet to prevents erosion adjacent to the Principal Spillway channel.

5 LANDSCAPE DESIGN

5.1 Site Analysis

A site analysis for the project was conducted by EPG, as documented in the report entitled *White Tanks FRS No. 3 Outfall Channel Final Design Site Analysis Report* (Ref. 15). The site analysis documented existing and planned land use resources, and the recreation and community contexts of the study area. Multi-use opportunities and constraints were identified.

Distinctive features within the study area include the existing vegetation along the Jackrabbit Wash, tributary washes and natural undeveloped areas vegetation, the undisturbed open space on the District property associated with FRS#3, and the existing ornamental planting and perimeter wall along Jackrabbit Estates. Opportunities to preserve or enhance these areas have been considered in the design. Disturbed areas include the FRS#3 structure and existing semi-hard and concrete channels and inlets. These areas are discordant with the design theme and require aesthetic enhancements.

Vegetation along the project corridor is dominated by large Palo Verde trees with the understory vegetation consisting of grasses and small shrubs that include native and non-native species. The District's Environmental Program Manager has conducted an assessment of the existing vegetation along the proposed channel alignment to determine the feasibility and likely success of preserving vegetation in place. The Environmental Program Manager determined that there was no value in salvaging plant material from within the project limits, though plant protection is valid provided that sufficient precipitation and moisture is available.

5.2 Landscape Theme

Based on the site analysis findings, it was determined that a "soft" or "semi-soft" structural flood protection method should be used, and a Natural Sonoran Desert Wash landscape design theme be applied, as defined in the District's *Flood Protection Methods* (Ref. 23) and *Landscape Design Themes Handbook* (Ref. 29).

This theme lends itself to a low maintenance, low water use, landscape that will fit with the natural desert. It is the team's desire to create a conveyance channel that mimics that found within a natural wash system. Natural washes tend to meander, erode, have soft banks and have predominant vegetation along the low flow wash banks. Overbank areas are typically less densely vegetated and differ in plant species. Further discussion of landforms and concepts are provided in the *Landscape Architecture Pre-Design Report* prepared by EPG (Ref. 14).

Proposed landscape materials include Mesquites, Ironwoods, Palo Verdes, Bursage, Brittlebush, Creosote, Desert Broom, and Saltbush for planting design. Native and existing ornamental plants within Reach 7 are preserved in place. Ground cover treatments include the use of a native hydroseed mix along with gravel mulch for erosion protection, limited use of rip-rap, and boulders. These landscape materials are considered appropriate for the desired landscape design theme. Existing boulders within Reach 5 will be salvaged and used within the project.

The Maricopa Region Trail Segment 35 (Ref. 50) lies along the Jackrabbit Trail corridor and has been incorporated within the project right-of-way. The Operations and Maintenance (O&M) road associated with the channel will be used to accommodate the Trail Segment along the west side of the channel.

5.3 Landscape Design

Landscape architecture was integrated into all phases of the 90% design development through iterative discussions and work sessions between HRC, Jacobs and EPG. This coordination between the landscape architectural and engineering design included development of the following:

- Channel form, alignment adjustments, and low-flow design
- Overbank berm design and water-harvesting grading for tree establishment and preservation
- Reach 9 contour grading
- Structural aesthetic treatment

5.3.1 Channel Form, Alignment Adjustments, and Low-Flow Design

The majority of the FRS#3 outfall channel will incorporate a meandered trapezoidal channel form, as described in section 3.1.2 of the landscape *Pre-Design Report* (Ref.14). Initial hydraulic design dimension and layout of the channel were further refined by EPG and HRC to include further channel meander, introduce berms, and avoid existing trees.

A low-flow channel was added to the channel design throughout the entire project, to form a cohesive thread that ties the various reaches together. The low-flow is a 10-foot wide and 1-foot deep sandy-bottomed meandering channel within the main trapezoidal channel. Boulders, tall-pot tree groups spaced approximately 120 feet apart, and islands help add to the visual interest created by the low-flow channel itself.

5.3.2 Preservation of Existing Landscape

From Reach 2 to Reach 8, there is a great deal of existing vegetation which has established itself over the years. This vegetation lies predominantly along the banks of the Jackrabbit Wash and at two major washes which cross through Reach 8. Because it is understood how long mature trees such as those found within these limits can take to establish, the design will preserve many stands of trees in place. Ultimately, many of these trees may need to be removed during the construction widening of Jackrabbit Trails. However, these trees will provide an important screen to the graded channel for an interim period of several years. Over time, the tall pot plants planted for this project will mature and help to realize the design team's goal of improved visual aesthetics and erosion resistance.

5.3.3 Tall Pot Trees and Hydroseed

Plant material proposed include existing tree and shrub preservation, tall pot tree plantings and native hydroseed. Layout for the tall-pot trees in the low-flow was coordinated between the project landscape architect and hydrologist based on the life-cycle impacts of the trees on channel flows. Elements of this are documented in the project O&M manual (Ref. 82)I, where desired tree maintenance are addressed to both maintain the important flood conveyance functions of the structure, and to ensure the landscape design is not impacted by O&M practices. Additional tall pots are proposed along the channel overbank and through-out Reach 9 within the landscape berming areas. Tall pot trees are designed to be installed a minimum of 15 feet from any proposed structures and a root barrier used for locations where trees are close to structural walls.

Two separate hydroseed mixes are proposed for the project. A shallow rooted native plant mix was selected for areas where no deep rooted trees or shrubs are allowed near FRS#3 (Dam Mix).A general hydroseed mix was developed for the remaining areas of the project that includes native shrubs, trees, grasses and wildflowers (General Mix). Species selected for this project were identified for their aesthetic value, erosion protection, and drought-tolerance.

Table 5: Native Hydroseed – Dam Mix

Botanical Name	Common Name	Pure Live Seed (pounds/ac.)
Shrubs		
Ambrosia deltoidea	Triangle-leaf Bursage	3.0
Enceliafarinosa	Brittlebush	2.0
Aristidapurpurea	Purple Three-awn	2.0
Bailyeamultiradiata	Desert Marigold	2.0
Annuals and Perennials		
Eschscholtziamexicana	Mexican Gold Poppy	2.0
Lesquerellagordoni	Gordon Bladder Pod	2.0
Sphaeralceaambigua	Globe Mallow	2.0

Table 6: Native Hydroseed – General Mix

Botanical Name	Common Name	Pure Live Seed (pounds/ac.)
Trees		
Cercidiummicrophyllum	Foothills Paloverde	0.5
Prosopisvelutina	Velvet Mesquite	0.5
Shrubs		
Acacia greggii	Catclaw Acacia	0.5
Ambrosia deltoidea	Triangle Bursage	2.0
Atriplexpolycarpa	Desert Saltbush	0.5
Calliandraeriophylla	Fairy Duster	0.5
Encelia farinose	Brittlebush	1.0
Larreatridentata	Creosote	0.5
Sennacovesii	Senna	0.25
Annuals and Perennials		
Aristidapurpurea	Purple Three-Awn	0.25
Baileyamultiradiata	Desert Marigold	0.25
Boutelouaaristidoides	Needle Grama	0.2
Eschscholtziamexicana	Mexican Gold Poppy	0.5
Penstemonparryi	Parry Penstemon	0.5
Plantagoinsularis	Indian Wheat	0.5
Lesquerellagordoni	Bladder Pod	0.5
Lupinussparsiflorus	Desert Lupine	0.5
Sphaeralceaambigua	Globe Mallow	0.25
Sporoboliscryptandrus	Sand Dropseed	1.0

Members of the PAAC expressed concern that hydroseed, without supplemental irrigation, would establish poorly, if at all. This corroborates the District's experience in the area with the FRS#4 inlet channel remediation area that failed to establish to the minimum standards required. A temporary watering system will be included in the requirements of the project, and is described further in the Special Provisions, Section 430.6.6. This includes the requirement for the contractor to provide a watering schedule for both a 90-day establishment period. An additional contract with a landscape contractor will include supplemental irrigation for an additional 270-day maintenance period. Bi-weekly watering, (a minimum of ¼" precipitation), will be required during the establishment period which then taper off to monthly watering for the maintenance period. Successful establishment of the hydroseed will be required for final acceptance by the District.

The existing split-face block wall at Jackrabbit Estates (Arroyo Mountain Estates, Reach 7) will be preserved with modifications in order to preserve the existing ornamental trees and shrubs along Jackrabbit Trail. Existing through irrigation from the development is to be maintained in this area, and landscape maintenancewill be provided by the HOA. This is in addition to the many native trees that are designated to be protected in place though-out the channel alignment.

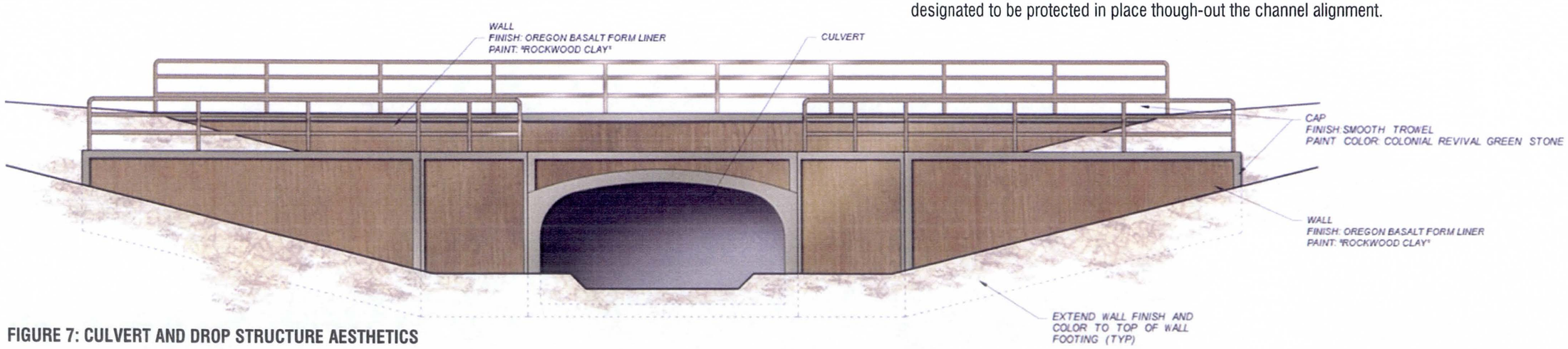

FIGURE 7: CULVERT AND DROP STRUCTURE AESTHETICS

5.3.4 Reach 9 Contour Grading and Manhole Access

Landscape berms downstream of FRS#3 are designed to cover the conveyance pipes (min. of 2-foot cover, max 16-foot cover), allow manhole access using "finger drives" from the main O&M road at the toe of FRS#3, screen views of the dam, and to provide positive drainage away from the structure. The use of the finger drives from the O&M road allows the access routes to have minimal impacts to the visual quality of the landscape setting, as opposed to a long, straight drive over the pipes themselves.

5.3.5 Aesthetic Treatment of Structures

Hard facilities within the project are designed to be visually interesting, while allowing for a consistent palette throughout the channel alignment. Using feedback from the Project Aesthetics Advisory Committee (PAAC), a final aesthetic treatment design was selected in keeping with the Natural Sonoran Desert Wash Design Theme, and considered semi-soft structure. Forms with a consistent look, in addition with paint and other aesthetic treatments are used for all culvert headwalls and grade control structures.

The treatments include the use of a natural rock formliner for all exposed concrete faces with a smooth-troweled 6-inch edge-relief. The surface of the concrete will be painted rather than stained, as requested by the PAAC, in order to allow for ease of maintenance and to cover-up graffiti and other possible vandalism. Spillways that convey flows from the many parallel washes into the channel also use the formliner and edge-relief aesthetic treatment for any exposed walls. Curved, natural appearing steps are used on the spillways faces of the steps and incorporate the formliner treatment. A randomly placed sand strata will to create a weathered exposed bedrock appearance (Figure 8). The spillway faces and flatwork will be treated using a simulated desert varnish to help give them the appearance of weathered stone.

FIGURE 8: PROPOSED SPILLWAY STEP TREATMENT EXAMPLE

5.4 Landscape Schedule

Landscape construction is indicated on the schedule to begin following the completion of each phase of the project. The assumption is that the contractor will benefit from using the rock mulch and hydroseed as dust control and slope stabilization prior to construction completion. However, District acceptance, at the beginning of the establishment period, will coincide with final project completion rather than on a Reach-by-Reach basis. During this period, the contractor will be required to maintain any installed or preserved existing landscape in accordance with the special provisions. This includes maintaining the plant material and hydroseed in a vigorous and healthy condition, weeding, and protecting both existing and new plants from damage or other detrimental impacts. Temporary irrigation will be provided by watering trucks or a "rain-for-rent"-type system. This will conducted under a separate contract, beginning at the end of the 90-day maintenance period, and extend an additional 270-days beyond the plant establishment period.

6 MEETINGS AND COST ESTIMATE

6.1 Public Meetings

Three Public Meetings were held to solicit input from members of the public that either live in the area or are property owners. These meetings were held as a presentation and open forum format at the Verrado High School. Attendance was generally poor, however, several important things came to light and resulted in changes to the overall design.

6.1.1 Jackrabbit Estates (Arroyo Mountain Estates)

Shea Homes and residents at the Jackrabbit Estates subdivision expressed concerns about the landscape maintenance, public access to the trail within the subdivision and the perimeter wall. In response to these concerns, the design team modified the design so that the existing landscape that borders Jackrabbit trail can be preserved in place along with its existing irrigation system. The Homeowners Association (HOA) will continue to provide maintenance of the perimeter landscape.

In order to reduce the risk of crime within the channel, the existing 6-foot high wall will be lowered in place and a view fence built on top of the re-constructed wall. The channel will be fenced from public access along its length with Jackrabbit Estates and the future Maricopa Trail will remain on the west side of the road.

6.1.2 Traffic Control

Concern was expressed about the traffic control measures that will be implemented during construction. Residents said that during construction of the sewer line within Jackrabbit Trail, traffic approaching from Indian School Road was misdirected into neighboring streets and forced to turn around. Construction of culverts across Indian School Road and Jackrabbit Trail are a major concern due to the one-way access into and out of the residential areas to the north.

6.2 Buckeye Park and Ride Meetings

Several meetings have been held to date with the engineers for the Town of Buckeye to help coordinate the design of the entrance along Palm Lane and grading and drainage from the site. The Park and Ride will provide retention storage on-site within underground retention pipes. These will have a controlled flow into a new storm drainage system to be built within Palm Lane. A storm drain pipe stub will be provided for this future drainage system.

Off-site drainage from north of the Park and Ride will be directed east toward the channel along the north property line of the Park and Ride. This concentrated drainage will be handled with a side drainage spillway. Near the east edge of the parking facility, landscape berms will be graded to help screen the future parking lot. Four strand wire fencing will still be provided along the adjoining property boundary.

6.3 Stakeholder Meetings

Stakeholder Meetings were held with representatives of DMB Verrado, Missionary Wings, Maricopa County Municipal Water District (MCMWD), and the HOA (Shea) for Jackrabbit Estates.

6.4 Earthwork Analysis

An earthwork analysis was conducted for the project on a reach by reach basis. Within Reach 9 there is an existing stockpile that was placed during the excavation of the FRS#3 North Inlet Channel. This stockpile will be used for landscape berming and mounding within Reach 9. The results from the earthwork analysis (Table 7) show that there will be an excess of material removed from the channel along its length. A portion of this material will be required to complete the landscape shaping within Reach 9. Excess material, if approved by the Design team and the District, could be wasted within Reach 9.

Table 7: Earthwork Analysis

Reach	1	2	3	4	5	6	7	8	9	Total
Cut (CY)	1,438	80,171	53,912	9,299	68,172	42,558	65,707	86,173	256,729	664,159
Compacted Fill (CY)	502	2,473	1,828	3,852	11,960	8,214	425	12,363	334,027	375,644
Bulk Fill* (CY)	542	2,673	1,977	4,165	12,930	8,880	459	13,365	361,110	406,102
Balance (CY)	896	77,498	51,935	5,134	55,243	33,678	65,248	72,808	-104,381	258,058

*Bulk Fill = Compacted Fill / Shrink Factor. Shrink Factor is assumed to be 92.5%. Actual field conditions may vary.

Table 8: Engineer's Estimate

Item	Cost
General Conditions	$170,000.00
Earthwork	$4,300,137.10
Streets and Related Work	$1,835,082.00
Right-of-Way and Traffic Control	$349,495.00
Landscape	$2,127,774.50
Structures	$5,638,632.09
Water and Sewer	$2,989,554.00
Sub-Total	**$17,410,674.69**
Contingencies (10%)	**$1,741,067.47**
Total	**$19,151,742.15**

6.5 Right-of-Way

One of the tasks of this project was to evaluate the right-of-way acquisition and easements needed to enable construction by the first quarter of 2011. Right-of-way needs were initially established as a result of the 30% Design (Ref. 40). Right-of-way acquisition could not commence until submittal of the 60% Plans was made to the District. After close review of the channel grading and berming impacts along the project perimeter the need for temporary and permanent easements beyond the right-of-way determined. Right-of-way strip maps have been prepared for the project and submitted to the District under separate submittal.

6.6 Cost Estimates

Cost estimates were prepared for the 30% and 60% and 95% submittal stages of the project and included potential land acquisition costs, construction costs, engineering, construction management and inspections and contingencies. These estimates were produced primarily for budget purposes. Our Final Cost Estimate is summarized in Table 8, and included in Appendix E. Unit prices, in some cases, have been adjusted downward to reflect the competitive nature of the current construction economy in Arizona. In addition, bid schedules prepared for the White TanksFRS#3 Phase 2Remediation (Ref. 67) provide a recent estimate of a project that has some similar line items.

7 CONCLUSIONS

The main purpose of the White Tanks FRS#3 Outfall Channel is to link the FRS#3 Principal Spillway to the existing inlet channel for FRS#4. This channel will convey flood releases from FRS#3 safely to FRS#4a provide greater flood protection for residents downstream of the dam. Along the five mile long channel and pipe system there are 11 box culverts, 10 side inflow spillways, and 15 grade control structures. The crossing of the FRS#3 emergency spillway incorporates Cast-in-Place Pipe (CIPP) and a riprap launch apron. Riprap lined dikes, currently under construction for the Phase 2 Remediation, will be restored in kind at project completion. Within the fissure risk zone adjacent to the dam, HDPE pipe in a granular bedding will to help mitigate future maintenance issues due to subsidence or earth fissuring.

In addition to being functional, this channel integrates aesthetic and multi-use functionality into a regional drainage feature. Care was taken to ensure structures along the channel either have as much of a natural appearance as possible, or stand out as architectural features. Consideration was taken to meet with and incorporate design feedback from the Town of Buckeye, MCDOT, NRCS, ADWR, the District, adjacent landowners, and the residents living in the area.

The Operations and Maintenance Road doubles as a multi-use trail for most of the length of the project and paths are provided adjacent to both sides of the channel, where feasible. Maintenance vehicle crossings are kept away from major intersections at the request of MCDOT. This will help to avoid conflicts with existing traffic and accommodate future road widening. Additionally, the trails are separated from the maintenance vehicle crossings at major intersections, to bring recreational traffic to the future pedestrian crossings.

This Final Design Report accompanies the Final Design Plans, which are a complete set of plans, encompassing civil, structural, and landscape plans.

8 REFERENCES

1. Alpha Geotechnical & Materials, Inc., in association with Hoskin-Ryan Consultants, Inc., *White Tanks FRS No. 3 Outfall Channel Final Design, FCD 2009C012, Geotechnical Report*, August 4, 2010.
2. AMEC Infrastructure, Inc., *Jackrabbit Trail (195th Avenue) Design Concept Report, Yuma Road to Thomas Road*, prepared for Maricopa County Department of Transportation, Engineering Division, MCDOT Work Order No. 69039, January 2004.
3. AMEC Infrastructure, Inc., *White Tanks FRS No. 3 Preliminary Geotechnical Report, Contract FCD 2003C014, Work Assignment No. 1*, December 2004.
4. Arizona Water Company, *Water Distribution Quarter Section Maps*, October 19, 1981.
5. CMX, *Zanjero Trails Parcel 34 Conceptual Site Plan*, Draft, March 30, 2009.
6. CMX, *Zanjero Trails RUPD/CUPD-PAD Zone Change Request, Proposed Zoning Map,* April 2006.
7. Coe and Van Loo, *Verrado Agua Fria Irrigation Pump Station No. 1*, September 19, 2004, As-Built July 8, 2005.
8. Coe and Van Loo, *Verrado Indian School Road Well*, March 7, 2003, As-Built January 9, 2004.
9. Coe and Van Loo, *Zone 3S Booster Pump Station, Agua Fria Plant Booster Station No. 9,* April 5, 2003, As-Built January 9, 2004.
10. Cooper Aerial, *One-Foot Interval Aerial Mapping for Project Area*, flew on November 15, 2009
11. Dodson & Associates, Inc., *HydroCalc*, Version 1.2a for Windows, 1996.
12. DMJM Harris / AECOM, *Jackrabbit Trail Access Control and Corridor Improvement Study, Interstate-10 to Bell Road, Volume I Final Report*, October 2008.
13. DMJM Harris / AECOM, *Jackrabbit Trail Access Control and Corridor Improvement Study, Interstate-10 to Bell Road, Volume II Appendices*, October 2008.
14. EPG, Inc., in association with Hoskin-Ryan Consultants, Inc., *White Tanks FRS No. 3 Outfall Channel Final Design Landscape Architecture Pre-Design Report, FCD 2009C012*, January 28, 2010.
15. EPG, Inc., in association with Hoskin-Ryan Consultants, Inc., *White Tanks FRS No. 3 Outfall Channel Final Design Site Analysis Report, FCD 2009C012,* November 20, 2009.
16. Federal Highway Administration, *HDS 4 – Design of Roadside Channels*, May 1965.
17. Flood Control District of Maricopa County, *Aesthetic and Multiple-Use Design Guidelines for Flood Control Structures*, January 5, 2005.
18. Flood Control District of Maricopa County, *Computer Aided Drafting & Design Data Delivery Specifications*, Rev. 1.0, January 2000.
19. Flood Control District of Maricopa County, *Consultant Guidelines, Incorporated by Reference for Consultant Services Contracts*, Third Edition, Revision 1, December 1, 2003.
20. Flood Control District of Maricopa County, *Drainage Design Manual for Maricopa County, Arizona, Hydraulics*, Draft September 2003.
21. Flood Control District of Maricopa County, *Drainage Design Manual for Maricopa County, Arizona, Hydrology*, Draft November 2003.
22. Flood Control District of Maricopa County, *Drainage Policies and Standards for Maricopa County, Arizona*, January 11, 2007.
23. Flood Control District of Maricopa County, *Flood Protection Methods*, November 6, 2006.
24. Flood Control District of Maricopa County, *Flood Protection Structures Types Handbook*, April 1, 2008.
25. Flood Control District of Maricopa County, *FY 08/09 0.8-ft Orthophotography Tiles for the White Tanks FRS No. 3 Outfall Channel Project Area in Tif Format*, February 11, 2009, Date of Photography October-December 2008.
26. Flood Control District of Maricopa County, *FY 08/09 1-ft Orthophotography Tiles for the White Tanks FRS No. 3 Outfall Channel Project Area in Tif Format*, March 5, 2009, Date of Photography October-December 2008.
27. Flood Control District of Maricopa County, *GIS Data for the White Tanks FRS No. 3 Outfall Channel Project Area in Various Formats*, Project 2007-C016 Assignment #4, February 12, 2009.
28. Flood Control District of Maricopa County, *Landscape Aesthetics and Multi-Use Consultant Handbook*, April 2003.
29. Flood Control District of Maricopa County, *Landscape Design Themes Handbook*, July 27, 2007.
30. Flood Control District of Maricopa County, *Mission, Vision, Goals, and Objectives for Planning Studies*, February 12, 2007.
31. Flood Control District of Maricopa County, *Policy for the Treatment and Landscaping for Flood Control Projects*, December 16, 1992.
32. Flood Control District of Maricopa County, *River Mechanics Manual for DDMSW*, Draft, September 2009.
33. Gannett Fleming, *White Tanks FRS No. 3 Outfall Channel Project, Preliminary Design Report*, December 2008.
34. Haestad Methods, Inc., *FlowMaster*, Version 5.17, 1995.
35. HDR, *Loop 303/White Tanks ADMPU Area Hydrologic Analysis*, March 2009.
36. HDR, *Loop 303/White Tanks ADMPU Area Hydrologic Analysis*, September 2009.
37. Hoskin-Ryan Consultants, Inc., *60% Plans for the Construction of White Tanks FRS No. 3 Outfall Channel, PCN 470.04.32, FCD Contract No. 2009-C012*, April 6, 2010.
38. Hoskin-Ryan Consultants, Inc., *90% Plans for the Construction of White Tanks FRS No. 3 Outfall Channel, PCN 470.04.32, FCD Contract No. 2009-C012*, August 3, 2010.
39. Hoskin-Ryan Consultants, Inc., *Conceptual Jackrabbit Trail Paving Plans*, April 6, 2010.
40. Hoskin-Ryan Consultants, Inc., *White Tanks FRS No. 3 Outfall Channel 30% Design Report, FCD 2007C016 Assignment 4, Volume I – Design Report and 30% Plans*, June 30, 2009.

41. Hoskin-Ryan Consultants, Inc., *White Tanks FRS No. 3 Outfall Channel 30% Design Report, FCD 2007C016 Assignment 4, Volume II – Appendices*, June 30, 2009.

42. Hoskin-Ryan Consultants, Inc., *White Tanks FRS No. 3 Outfall Channel Final Design, FCD 2009C012, Bid Tab, Construction Schedule, Supplementary General Conditions, and Special Provisions*, October 2010.

43. Hoskin-Ryan Consultants, Inc., *White Tanks FRS No. 3 Outfall Channel Final Design, FCD 2009C012, Design Report 60% Submittal*, April 21, 2010.

44. Hoskin-Ryan Consultants, Inc., *White Tanks FRS No. 3 Outfall Channel Final Design, FCD 2009C012, Final Drainage Report,* February 2011.

45. Hoskin-Ryan Consultants, Inc., *White Tanks FRS No. 3 Outfall Channel Final Design, FCD 2009C012, Pre-Design Report,* January 29, 2010.

46. Hoskin-Ryan Consultants, Inc., *White Tanks FRS No. 3 Outfall Channel Final Design, FCD 2009C012, Survey Report,* April 12, 2010.

47. Hoskin-Ryan Consultants, Inc., *White Tanks FRS No. 3 Outfall Chanel Final Design, FCD 2009C012, Utilities Report*, August 2, 2010.

48. Hoskin-Ryan Consultants, Inc., *Conceptual Jackrabbit Trail Paving Plans, FCD 2009C012*, April 6, 2010.

49. KVL Consultants, Inc., for Flood Control District of Maricopa County, *Drainage Design Management System for Windows*, Version 3.5.4,April 1, 2008.

50. Maricopa County Trails Commission, *Maricopa County Regional Trail System Plan*, adopted 2004.

51. Morrison Maierle, Inc., *Off-Site Water Plans for Jackrabbit Estates*, March 29, 2005, As-Built October 11, 2007.

52. Phillips, Jeff V., and Saeid Tadayon, United States Geological Survey, in association with Flood Control District of Maricopa County, *Selection of Manning's Roughness Coefficient for Natural and Constructed Vegetated and Non-Vegetated Channels, and Vegetation Maintenance Plan Guidelines for Vegetated Channels in Central Arizona*, Scientific Investigations Report 2006-5108, 2007.

53. SiteTek Financial Arts, Inc., *Value Analysis Workshop, November 3-5, 2009, 30% Design Phase White Tanks FRS III Outfall Channel, Value Analysis Draft Report*, November 9, 2009.

54. Thomsen, B.W. and Hjalmarson, H.W., with U. S. Geological Survey, Water Resources Division, for Flood Control District of Maricopa County, *Estimated Manning's Roughness Coefficients for Stream Channels and Flood Plains in Maricopa County, Arizona*, April 1991.

55. Town of Buckeye, *Standard Detail 9015 – Local Street*, Draft.

56. Town of Buckeye, *Storm Water Drainage System Design Manual, DM500*, August 2007.

57. Town of Buckeye, *Transportation Design Manual, DM202*, May 2007.

58. United Engineering Group, *Water Plans for Jackrabbit Estates*, April 12, 2005, As-Built September 7, 2006.

59. United States Army Corps of Engineers, *Hydrologic Engineering Center, HEC-1 Flood Hydrograph Package*, Version 4.1, June 1998.

60. United States Army Corps of Engineers, *Hydrologic Engineering Center, HEC-RAS River Analysis System*, Version 4.0.0, March 2008.

61. URS, *Loop 303 Corridor/White Tanks Area Drainage Master Plan Update, Volume IV: Level III Area Drainage Master Plan Update Report, Final*, FCD Contract 99-40, February 2005.

62. URS, *Design Report, White Tanks FRS No. 3 Remediation Project – Phase 1, Volume 1*, March 23, 2005.

63. URS, *Design Report, White Tanks FRS No. 3 Remediation Project – Phase 1, Volume 2*, March 23, 2005.

64. URS, *Geotechnical Data Report, White Tanks FRS No. 3 Remediation Project*, March 23, 2005.

65. URS, *Technical Memorandum, Emergency Spillway Erosion Evaluation, 90% Design Review for White Tanks FRS#3 Outfall Channel*, October 12, 2010.

66. URS, *White Tanks FRS No. 3 Remediation Project – Phase 1: Embankment Fill Plan and Outlet Works Channel Plan and Profile, PCN 470.04.30, FCD Contract No. 2004C017*, March 2005.

67. URS, *White Tanks FRS No. 3 Remediation Project – Phase 2, PCN 470.04.30, FCD Contract No. 2008C031*, March 3, 2009.

68. USDA, *SITES 2005 Water Resource Site Analysis Computer Program*, December 2005.

69. USDA, *Technical Release No. 60 – Earth Dams and Reservoirs*, October 1985.

70. USDA, *Technical Release No. 67 – Reinforced Concrete Strength Design*, August 1980.

71. USDA NRCS, *Review Report for Outfall Channel – White Tanks 3 Flood Retarding Structure 60% Design*, May 20, 2010.

72. WLB Group, *White Tanks/Agua Fria Area Drainage Master Study*, 1994.

73. Wood, Patel and Associates, Inc., *Indian School Road Utilities, Verrado*, February 17, 2003, As-Built February 9, 2004.

74. Wood, Patel and Associates, Inc., *Non-potable Waterline Plan, Sells Road to Indian School Road*, November 1, 2004, As-Built March 11, 2005.

75. Wood, Patel and Associates, Inc., *Offsite Water Transmission Main, Verrado*, April 17, 2003, As-Built October 22, 2003.

76. Wood, Patel and Associates, Inc., *Verrado Planning Unit Drainage Plan for Portions of Planning Units II and IV (Phase 3 South and Phase 3 East), and Update to Master Drainage Plan*, August 22, 2006.

77. Wood, Patel and Associates, Inc., White Tanks FRS No. 4 Rehabilitation Project, December 2008.

78. Simon, Li & Associates, Design Manual for Engineering Analysis of Fluvial Systems, 1985.

79. J.E. Fuller Hydrology and Geomorphology, Inc., Emergency Action Plan Final report for White Tanks FRS #3, October 2009.

80. RBF, Sewer Plans for Jackrabbit Trail, Roosevelt Street to ¼ Mile North of Indian School Road, As-Built June 29, 2009.

81. Jacobs, *White Tanks FRS No. 3 Outfall Channel, Structures Design Calculations,* August 3, 2010.

82. Geological Consultants, Inc., *Suggested Criteria for Caliche Hardness Check, Pipe Line Excavation in White Tanks FRS No. 3 Emergency Spillway Crossing, White Tanks FRS No. 3 Outlet channel, GCI Project No. 2009-129*, August 3, 2010.

83. Hoskin Ryan Consultants, Inc., *Operations and Maintenance Manual, Construction Contract FCD 2010C031, White Tanks FRS No. 3 Outfall Channel*, PCN 470.04.32, February 7, 2011.

APPENDIX A PRODUCT LITERATURE

The lightweight pipe that takes a heavier load

Weholite® pipe is large diameter, profile wall pipe made from high-density polyethylene (HDPE) resin. Designed for gravity and low-pressure applications, Weholite's raw material properties have been combined with patented structural wall technology to create a lightweight engineered pipe with superior loading capacity. It is used to convey liquids or air, under ground or above ground, in low-pressure applications.

Lighter. Stronger. Chemical Resistant.

Weholite pipe is much lighter than similarly sized concrete pipe. Combine this with longer manufacturing lengths and Weholite allows you to achieve savings in labour and equipment.

Weholite HDPE pipe will not corrode, tuberculate or support biological growth, making it the material of choice in harsh chemical environments. It is inert to salt water and the chemicals likely to be present in sanitary sewage effluent.

Like all HDPE pipe, Weholite has a smooth ID that maintains its flow capability over time. The low Manning's roughness factor of 0.01 remains constant, even after years of use.

Easier to Transport. Easier to Install. Leak Proof.

Weholite pipe is much easier to handle and install than heavier, rigid concrete or metallic pipe. This means potential cost savings during the construction process. It is structurally designed to withstand an impact, especially in cold weather installations when other pipes are prone to cracks and breaks.

Weholite pipe is usually joined by a thermal fusion process (extrusion welding) to form a joint that is as strong as the pipe itself. Extrusion welding eliminates potential leak points every 8-20 feet commonly found with concrete, PVC and ductile iron pipe. Since fused joints are self-restraining, costly thrust restraints or thrust blocks may not required.

Extrusion welded Weholite pipe is leak proof. The properties of HDPE pipe and the thermal fusion method of joining produces a continuous pipeline, eliminating the risk of leakage caused by shifting unstable soils. A continuous Weholite pipeline eliminates the joint infiltration and exfiltration problems experienced with other pipe materials.

Cost Effective. Permanent.

Weholite pipe offers distinct chemical and physical advantages over concrete or iron pipe. It can be bent to a radius 200 times the nominal pipe diameter to eliminate many fittings required for directional changes in piping systems made from other materials. In addition, the flexibility of Weholite pipe makes it well suited for dynamic soils and areas prone to earthquakes.

Weholite is cost effective in both the short and long term. The fact that it is lightweight makes it easier to transport and install. The fact that it is leak proof and fatigue resistant means years of maintenance free use. The Plastics Pipe Institute conservatively estimates the service life for HDPE pipe to be 50-100 years.

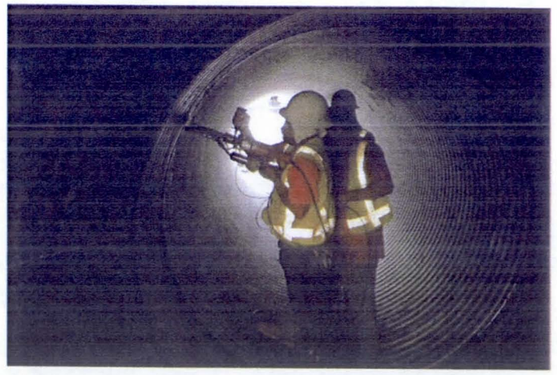

Weholite Advantages

- *Lightweight*
- *Impact Resistant*
- *Corrosion Resistant*
- *Chemical Resistant*
- *Fatigue Resistant*
- *Leak Proof*
- *Flexible*
- *Long Life*
- *Environmentally Friendly*

Technical Info

The Weholite Structure

Weholite pipe is manufactured with a unique profile design that takes advantage of structural shape efficiencies to provide a product that is suitable for a wide range of loading conditions. The structure is the optimal solution when comparing performance versus weight.

Material Properties

Weholite Pipe is Corrosion and Chemical Resistant

Weholite pipe will not corrode, tuberculate or support biological growth. It is the material of choice in harsh chemical environments. Weholite has a smooth ID and maintains its flow capability over time - Mannings n Factor remains 0.010, even after years of use.

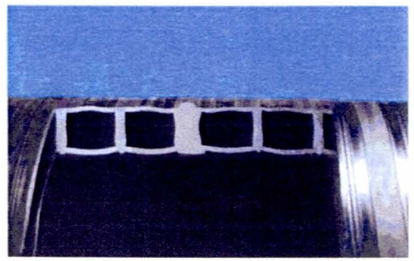

Weholite Pipe is Flexible and Fatigue Resistant

Weholite can be bent to a radius 200 times the nominal pipe diameter. This can eliminate many fittings required for directional changes compared to piping systems made from other materials. In addition, the flexibility of Weholite makes it well suited for dynamic soils and areas prone to earthquake.

Weholite Pipe is Lightweight and Impact Resistant

Weholite is much easier to handle and install than heavier, rigid metallic or concrete pipe, allowing for cost advantages in the construction process. Structurally, it is better suited to withstand an impact than other pipe materials, especially in cold weather installations when other pipes like PVC are prone to cracks and breaks.

Weholite Pipe Abrasion resistance

Weholite pipes show superior abrasion-resistant qualities compared to traditional pipeline materials. This is proven by the fact that HDPE pipes have been the first choice for the mining industry during many decades.

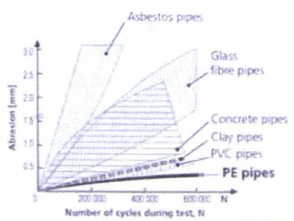

Item			Dimensions	
Size (inch)	Class	Spec	Avg. OD (inch)	Avg. ID* (inch)
66	160	F894	72.4	66.0
66	*250*	*F894*	*73.8*	*66.0*
72	100	F894	78.4	72.0
72	160	F894	79.1	72.0
72	*250*	*F894*	*80.5*	*72.0*
78	100	F894	84.4	78.0
78	160	F894	85.8	78.0
78	*250*	*F894*	*86.5*	*78.0*
84	100	F894	90.3	84.0
84	160	F894	91.8	84.0
84	250	F894	93.2	84.0
90	160	F894	97.8	90.0
90	250	F894	99.2	90.0
90	400	F894	100.6	90.0
96	160	F894	104.5	96.0
96	250	F894	105.9	96.0
96	400	F894	107.4	96.0
108	160	F894	117.2	108.0
108	250	F894	118.6	108.0
108	400	F894	120.8	108.0
120	160	F894	129.9	120.0
120	250	F894	131.3	120.0
120	400	F894	134.2	120.0
132	160	F894**	141.6	132.0

Standard Inventory Product
*Minimum ID is 1% less than Average ID
**Pipe complies entirely with ASTM F894 with the exception of the nominal OD value.

Note: This dimensional table for Weholite pipe contains a range of product sizes and stiffness classes. The specification associated with each of these items is ASTM F894. Pipe sizes 48" and smaller are available in lower stiffness classes that do not comply with the minimum waterway wall thickness requirement of ASTM F894. If the analysis using our online tools indicates that one of these lower stiffness items is suitable, the standard that will be indicated on all documentation is NONF894. The items comply in all respects with ASTM F894 except the waterway wall.

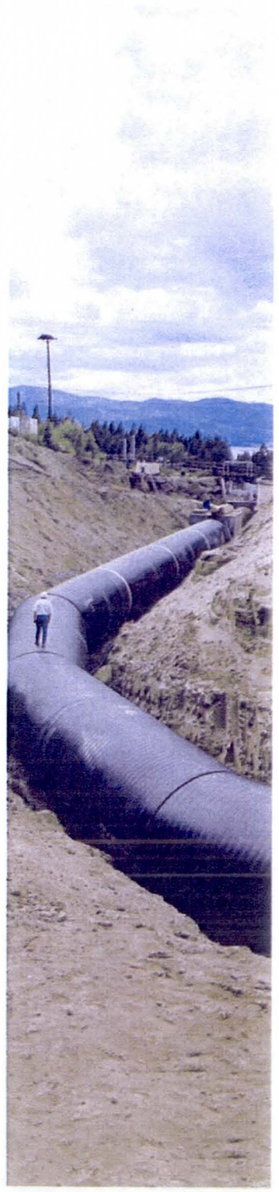

State of Florida
Department of Transportation

State Materials Office
Corrosion Research Laboratory
2006 N.E. Waldo Road
Gainesville, Florida 32609
(904) 372-5304

High Density Polyethylene Pipe Fire Risk Evaluation

Final Report
July 15, 1994

Principal Investigators: Richard J. Kessler, P.E.
Rodney G. Powers

Project Engineer: Ivan R. Lasa
Technical Assistants: Robert M. Langley
Dave Cerlanek
John Freeland
Patrick McManaman

Report Prepared by: Rodney G. Powers
Ivan R. Lasa
Dave Cerlanek

L. L. Smith, P.E.
State Materials Engineer

Executive Summary

High density polyethylene pipe (HDPE) is gaining widespread use in highway drainage applications. Florida has used HDPE pipe on a limited basis for approximately five years.

Recent concerns expressed relative to the flammability of HDPE pipe has prompted the Florida Department of Transportation (FDOT) to conduct a study to determine the actual risk of fire in typical pipe installations.

The study included field burn tests, a state-by-state survey of HDPE pipe usage and experience and standard laboratory burn tests on polyethylene coupons. Also included in the field tests was a burn test on a mitered end section with concrete apron as presently proposed for FDOT approval by the plastic pipe industry.

The results of the study indicate that HDPE pipe is not at significant risk of fire when installed to present standards and exposed to fire such as that which may be encountered in roadside grass fires. The results of the burn tests on the mitered end section indicates that this design is susceptible to ignition in a roadside grass fire.

The state-by-state survey shows that at least forty-one states use HDPE pipe. Of the forty-one responses to the survey, only four reported fires in polyethylene pipe and these were judged as minor isolated instances.

The results of the study confirm FDOT's present policies and specifications relative to the use of HDPE pipe. The study concludes that only a minimal risk of fire exists and that no changes to FDOT's policies and specifications are warranted.

SD96-11-F

SD Department of Transportation
Office of Research

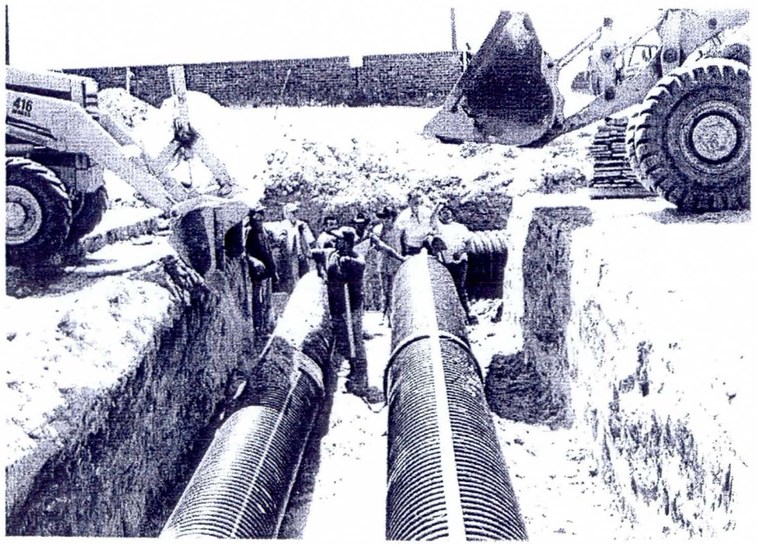

Evaluation of High Density Polyethylene (HDPE) Pipe

SD96-11
Final Report

Prepared by
Office of Research
South Dakota Department of Transportation
Pierre, South Dakota 57501

April, 1998

HDPE manufacturers recommend achieving a backfill modulus of at least 1000 psi in installations involving AASHTO H20 loads under minimum cover (305 mm) conditions or in deep installations. Maximum cover would typically be 15 to 18 m (50-60 ft) but will vary depending on the application and engineering design. Manufacturers note that the cover heights are measured from the top of the pipe; calculations are based on load factor design as per AASHTO procedures; assume loose sand, earth or gravel soil density of 100 lbs./cu. ft.; and 120 lbs./cu. ft. for compacted sand, earth, gravel or ballast.

The April 1997 survey of neighboring states showed that the Minnesota Department of Transportation has recently increased its maximum fill allowed. Technical Memorandum No. 95-14-B-02 now allows the use of 760 mm and 915 mm (30 and 36 in) diameter pipe and increased the allowable overfill from 3 to 6 m (10 to 20 ft). HDPE dual wall corrugated pipe and reinforced concrete pipe shall normally be provided in plans as alternates and may be used on all state trunk highways.

Based on the literature review, and the survey of other DOT practices, it is recommended that the SDDOT set the HDPE maximum fill height at 6.1 m (20 ft) with a 90 percent Standard Proctor Density compaction. This will allow the use of HDPE for most applications and will provide engineers and contractors the opportunity to evaluate its use on a continuing basis. The maximum and minimum fill heights issue should be re-evaluated after the SDDOT acquires additional experience with HDPE installation techniques.

POTENTIAL FOR DAMAGE BY FIRE

The susceptibility of polyethylene pipe to fires is an important issue that has been addressed by various testing facilities including studies conducted in Florida and Texas. Texas DOT officials conducted ten different scenarios, testing two twenty foot sections of HDPE pipe. After attempting to ignite the pipe with combustible materials, Texas DOT engineers attending the test felt the polyethylene material was not a fire concern for culvert installations (24).

A study performed by the Florida Department of Transportation concluded that "the heat gain of the pipe cross section was not sufficient to cause softening or subsequent weakening of the pipe during burn tests". Out of the 41 states responding to the Florida study survey, only four reported incidents of fire and the total number of fires was reported as eight. The computed rate at which fires affecting HDPE pipe have occurred is one fire per state every 48 years. However, it should be noted that mitered polyethylene end sections are "...subject to fire damage and destruction when exposed to expected grass fire intensities." The Florida DOT recommends that the polyethylene pipe terminate in a concrete headwall, drainage structure, or non-plastic mitered end concrete apron (25).

In November 1991 a routine fuel reduction burn destroyed 60 lineal feet of 760 mm (30 in) polyethylene pipe culvert in the Badlands National Park in South Dakota. While this event has been highly publicized, it remains an isolated incident. The author is not aware of any other fire causing damage to HDPE pipe in South Dakota.

The South Dakota Department of Transportation uses an Approach Pipe Plan Note that specifies "Class II Reinforced Concrete Pipe with Safety Ends and Polyethylene Pipe with CMP end sections may be substituted for Corrugated Metal Pipe at approaches on a per site basis at no additional cost to the State. Acceptance of polyethylene pipe will be by certification. The end sections for the polyethylene pipe shall be metal and conform to the details for CMP end sections, and shall be compatible to the polyethylene pipe". While the use of concrete or metal end sections is recommended for those areas where the possibility of grass fires exist, it is recommended that the SDDOT allow the option of using plastic end sections in municipal settings.

APPENDIX B – FRS No. 3 Outlet Design Capacity Memorandum

Flood Control District
of Maricopa County

PROJECT MEMORANDUM

Date: November 16, 2009

To: Gary Wesch, P.E.
Project Manager

From: Michael Greenslade, P.E.
Project Manager

Subject: White Tanks FRS No. 3 Outlet Design Capacity

In your e-mail of November 3, 2009 you requested clarification regarding the design outlet capacity for White Tanks FRS No. 3. You indicated that your meeting notes reference a capacity of 230 cfs which corresponds to the capacity when the reservoir water surface elevation is at the crest of the auxiliary (emergency) spillway. In order to clearly understand the channel capacity needed for discharges through the principal spillway the design and the operational procedures for the interim and future conditions must be understood. For reference in this discussion, the discharge rating curve for the principal spillway and gated outlet (Table 14-2) from the White Tanks No. 3 Phase 1 design is attached.

The principal spillway consists of two 48" pipes of which one is connected to a stand alone gated outlet and the other is connected to an NRCS riser which includes a bypass gated outlet. With the NRCS riser currently capped (interim condition), the 48" pipe connected to the NRCS riser can be utilized via the bypass gated outlet. The capping of the NRCS riser was done so that uncontrolled flows through the principal spillway would not occur until outlet channels had been constructed and uncontrolled flows could be safely discharged (ultimate future condition). The ultimate future condition is defined as follows:

- The overall rehabilitation of White Tanks FRS No. 3 and White Tanks FRS No. 4 is completed,
- The outlet channel from White Tanks No. 3 to White Tanks No. 4 has been constructed,
- The outlet channel from White Tanks No. 4 has been constructed, and
- The earth fissure risk at White Tanks No. 3 has either been reduced due to additional studies or mitigated through design.

While the 30% design for the outlet channel assumed a capacity utilizing both the 48" pipes with the principal spillway uncapped (537 cfs) a review of the original design intent and preferred operational procedures indicates that a capacity significantly less is needed. Future operation in the ultimate future condition defined above assumes the principal spillway (right 48" pipe) is uncapped and connected to the outlet channel. The stand alone gated outlet (left 48" pipe) should not be

connected to the outlet channel and therefore its capacity ignored for the outlet channel design. The purpose for not connecting the stand alone gated outlet to the outlet channel is that operationally this outlet will only be utilized if there is a condition where the outlet channel should not be utilized as discussed below:

- Following construction of the White Tanks FRS No. 3 outlet channel and under certain flooding conditions there may be a need to prohibit flows from White Tanks FRS No. 3 to the outlet channel prior to construction completion of the White Tanks FRS No. 4 outlet channel. Under these flooding conditions, the stand alone gated outlet would only be utilized after implementation of the District's emergency action plan (EAP).
- A condition where the stand alone gated outlet might be utilized in the ultimate future condition is one where a hazard exists within the earth fissure risk zone such that discharges into the outlet channel would create a dam safety concern to White Tanks FRS No. 3 and discharges should be directed away from the earth fissure risk zone. Under this condition, the stand alone gated outlet would only be utilized after implementation of the District's EAP.

Recommendations

Based on the planned operational procedures and ultimate future condition the outlet channel should be designed for the discharge associated with the principal spillway uncapped. Under this condition, a maximum discharge of **284 cfs** will occur when the water surface elevation is at its maximum (PMF elevation) which is 1,216 feet (NAVD 88).

The design for any structure to accommodate the stand alone gated outlet should be for a maximum discharge of 253 cfs that will occur during operation of this structure at a maximum water surface elevation discussed above. Typically, the stand alone gated outlet will not be operated until spillway flows have ceased but to ensure the outlet channel design capacity is not exceeded the maximum discharge should be utilized for design.

Furthermore, the design of the conveyance system through the emergency spillway should be such that failure will not occur during spillway flows and the calculated scour resulting from those flows. The analysis should include modifications to the final approved SITES models to account for the conveyance system.

TABLE 14-2
Outlet Works Discharge Rating Curve

Elevation (feet) (NAVD 88)	Future Condition (Principal Spillway Open) Discharge (cfs)			Interim Condition & Future Condition (Principal Spillway Closed) Discharge (cfs)		
	Gated Outlet (48-inch)	Principal Spillway[1] (48-inch)	Combined	Gated Outlet (48-inch)	Gated Principal Spillway Bypass outlet (48-inch)	Combined
1,197	-	-	-	-	-	-
1,199	24	-	24	24	24	48
1,201	87	76	163	87	87	174
1,203	123	181	304	123	123	246
1,205	150	201	351	150	150	300
1,207	173	218	391	173	173	346
1,209	194	234	428	194	194	388
1,211	212	249	461	212	212	424
1,212	221	257	478	221	221	442
1,213	229	264	493	229	229	458
1,214	237	270	507	237	237	474
1,215	245	277	522	245	245	490
1,216	253	284	537	253	253	506
1,217	260	290	550	260	260	520
1,218	267	296	563	267	267	534

Notes:
1. Principal spillway crest elevation is set at 1,200 ft (NAVD 88).

APPENDIX C – URS EMERGENCY SPILLWAY EROSION EVALUATION

URS

Technical Memorandum

7720 N. 16th Street
Suite 100
Phoenix, Arizona 85020
602.371.1100 Tel
602.371.1615 Fax

Action	Info	File
Mike Greenslade – District		23445887

From: Todd Ringsmuth, P.E.

Date: October 12, 2010

Subject: Emergency Spillway Erosion Evaluation
90 Percent Design Review
White Tanks FRS No. 3 Outfall Channel

Registered Professional Engineer (Civil) CERTIFICATE NO. 32847 TODD E. RINGSMUTH Date Signed 10/12/10 ARIZONA, U.S.A.

Expires 9/30/13

The purpose of this memorandum is to present the Emergency Spillway erosion evaluation for the proposed 90 percent design documents prepared by Hoskin-Ryan Consultants for the above referenced project. URS Corporation (URS) performed a design review at the request of the Flood Control District of Maricopa County (District). The proposed design includes construction of buried, concrete-covered pipelines across the White Tanks FRS No. 3 Emergency Spillway downstream channel and modification to the existing Principal Spillway outlet structure. The comments provided in this memorandum specifically relate to the erosion evaluation performed by URS for the Emergency Spillway downstream channel.

The White Tanks FRS No. 3 Emergency Spillway and downstream channel are designed to meet ADWR and NRCS criteria, whichever is more stringent. This memorandum presents a discussion of the design criteria, details of the analyses performed, and recommendations for design modifications.

Hoskin-Ryan Design

Hoskin-Ryan prepared 90 percent design documents for the proposed outfall channel. The outfall channel will convey stormwater from the White Tanks FRS No. 3 Principal Spillway to White Tanks FRS No. 4. The design includes two buried, parallel pipelines crossing the Emergency Spillway downstream channel. Within the limits of the Emergency Spillway downstream channel, the pipelines will be covered by concrete slurry, with the concrete flush to channel bottom. Riprap is provided upstream and downstream of the concrete-encased pipelines to provide erosion protection during an Emergency Spillway discharge event. The riprap downstream of the pipelines extends approximately 100 feet downstream of the pipelines and 20 feet below the channel bottom. Details are shown on Drawing No. D13 provided in Appendix A.

P:\WRES\FCDMC\23445608_WHITE TANKS_PHASE 2 CONSTRUCTION\DOWNSTREAM CHANNEL DESIGN REVIEW\COMMENTS\90 PERCENT\WT3_EROSION EVALUATION MEMO_90 PERCENT_12OCT10.DOC

ADWR Design Requirements

ADWR requires the spillway be designed to safely convey the 6-hour Local Storm PMF. To meet ADWR design criteria, scour depths were estimated immediately downstream of the concrete spillway structure and within the channel to determine the depths of erosion protection. The scour depth at the concrete spillway structure was estimated by combining general scour, calculated using the Blench Equation, and local scour, calculated using the Zimmerman and Maniak Equation (USBR 1984). The scour depth for along the dikes was estimated by calculating general scour using the Blench Equation. The equations used to estimate scour were identified through coordination with the District.

ADWR required the scour calculation be performed in two ways:

1) Using the average particle size and a 1.3 factor of safety; and
2) Using the minimum particle size and a 1.0 factor of safety

The approach resulting in the greater scour depth is selected for design. The scour depth for the dikes, based on the general scour equation, was calculated to be approximately 10 feet for both the average and minimum particle size approaches. Immediately downstream of the spillway structure, local scour was added to the general scour, resulting in a total scour of 13.3 feet (average) and 19.6 (minimum). The design scour depth at the spillway structure was selected as 20 feet.

The Hoskin Ryan design consists of concrete-covered pipelines constructed across the Emergency Spillway downstream channel and dikes. URS has interpreted the concrete cover as an erosion control structure as described in *Computing Degradation and Local Scour* (USBR 1984). General scour immediately downstream of the pipelines could create a drop condition, increasing the potential for local scour to occur. Therefore, the potential scour at the downstream side of the pipelines is similar to that immediately downstream of the concrete spillway structure, or 19.6 feet. The calculation of scour depth based on ADWR criteria is provided in Appendix B.

NRCS Design Requirements

NRCS requires the spillway be designed to maintain spillway integrity and provide spillway stability during conveyance of the corresponding design storms. The spillway integrity is evaluated using the 24-hour General Storm PMF and spillway stability is evaluated using the Emergency Spillway Hydrograph (ESH). The NRCS SITES erosion model was used to evaluate headcut erosion in the spillway channel.

The design conducted for the White Tanks FRS No. 3 Phase 2 Project consisted of evaluating the left and right sides of the spillway channel (looking downstream). Field investigations showed the left side of the spillway channel to have thicker zones of more erodible soils than the right side. The presence of thicker zones of more erodible soils in the left profile resulted in the SITES model showing greater headcut erosion on the left side of the spillway channel. The SITES modeling was also performed for a range of natural ground slopes downstream of the spillway

channel, with the 2.0 percent natural ground slope resulting in the worst case erosion. The results of the SITES modeling from the spillway design are presented in Table 1.

TABLE 1
SITES Model Results

	Emergency Spillway Hydrograph (ESH)				24-hour General Storm			
	Left Profile		Right Profile		Left Profile		Right Profile	
Erosion Location	Depth (ft)	Distance[3] (ft)	Depth (ft)	Distance[3] (ft)	Depth (ft)	Distance[3] (ft)	Depth (ft)	Distance[3] (ft)
Erosion at riprap apron[1,2]	0	N/A	0	N/A	9.1	N/A[1]	9.1	N/A[1]
Downstream Erosion (with 2.0 percent natural ground slope)	10.9	1,288	10.9	1,288	20.2	1,017	12.0	1,142

Notes:
1) In all models, riprap does not erode.
2) The erosion depth at the riprap apron does not change with downstream natural ground slope beyond the constructed channel.
3) Distance is measured from the Emergency Spillway crest. The end of the spillway channel is approximately 1,400 feet from the spillway crest.

The results of the SITES modeling indicate that a headcut depth of 20.2 feet could encroach to within 1,017 feet of the concrete Emergency Spillway structure. The proposed pipelines cross the left dike at approximately 1,000 feet downstream of the Emergency Spillway structure.

Since the left profile provides the worst case headcut erosion assessment, only the left profile was evaluated for review of the Outfall Channel 90 percent design. URS assumed that the proposed manhole located at the center of the spillway channel would be flush to the top of concrete and would therefore not cause increased erosion in the channel. The SITES model for the left profile was revised to include the proposed concrete-covered pipelines to evaluate the effect on headcut erosion within the spillway channel. The results of the SITES modeling when incorporating the pipelines are presented in Table 2.

TABLE 2
SITES Model Results – Outfall Channel Design

Erosion Location	Emergency Spillway Hydrograph (ESH)		24-hour General Storm	
	Left Profile		Left Profile	
	Depth (ft)	Distance[3] (ft)	Depth (ft)	Distance[3] (ft)
Erosion at riprap apron[1,2]	0	N/A[1]	12.2	N/A[1]
Downstream Erosion (with 2.0 percent natural ground slope)	10.9	1,288	19.7	1,061

Notes:

1) In all models, riprap does not erode.
2) The erosion depth at the riprap apron does not change with downstream natural ground slope beyond the constructed channel.
3) Distance is measured from the Emergency Spillway crest. The end of the spillway channel is approximately 1,400 feet from the spillway crest.

The results of the SITES modeling indicate that the headcut erosion and distance from the Emergency Spillway structure is unchanged for the ESH. For the 24-hour General Storm model, the headcut erosion immediately downstream of the pipelines is estimated to be 19.7 feet deep. The headcut erosion at the Emergency Spillway structure increases to 12.2 feet deep for the 24-hour General Storm model. The SITES models developed for this evaluation are provided in Appendix C.

Additional Scour Analysis

URS evaluated the scour downstream of the pipelines following the scour methods used to meet ADWR design criteria. The scour depths for the ESH were estimated to be 5.5 feet and 7.5 feet for the average and minimum particle sizes, respectively. The scour depths for the 24-hour General Storm PMF were estimated to be 11.5 feet and 16.7 feet for the average and minimum particle sizes, respectively. The calculation of scour depth based on NRCS criteria is provided in Appendix B.

Conclusions and Recommendations

Construction of the pipelines across the Emergency Spillway downstream channel will change the potential for erosion within the channel. The pipelines must be protected to prevent increased erosion upstream of the pipelines towards the concrete Emergency Spillway structure and erosion through the left dike towards the dam embankment.

Based on ADWR design criteria, the estimated scour depth downstream of the concrete-covered pipelines is 19.6 feet. The proposed design, consisting of a riprap launch apron downstream of the concrete-covered pipelines, should be sufficient to protect the pipelines and dikes against scour erosion estimated using ADWR design criteria.

For the NRCS design criteria, scour depths were estimated for the ESH and the 24-hour General Storm PMF for the condition with the proposed pipelines and compared to the original design models without the pipelines. The results of the SITES modeling with the proposed pipelines for the ESH showed no change in scour depths or scour locations within the spillway channel. The results of the SITES modeling with the proposed pipelines for the 24-hour General Storm showed an increase in headcut depth to 12.2 feet at the Emergency Spillway structure and a decrease in headcut depth to 19.7 feet at the pipelines. The increased headcut at the Emergency Spillway structure is likely caused by the addition of the pipelines within the profile thus causing headcut to begin at the pipeline location. The increased headcut depth at the Emergency Spillway structure is shallower than the design depth and would be contained by the riprap apron downstream of the structure. The reduced headcut at the concrete-covered pipelines is likely a function of the concrete-covered pipelines halting the headcut advance, but assumes the concrete structure would remain in place during headcutting. The scour analysis shows that scour depths immediately downstream of the encased pipelines could range from 5.5 to 7.5 feet for the ESH and from 11.5 to 16.7 for the 24-hour General Storm.

The proposed design, consisting of a riprap launch apron downstream of the concrete-covered pipelines, should be sufficient to protect the pipelines and dikes against scour and headcut erosion estimated using the NRCS design criteria. In the event that headcut or scour erodes the dikes, the transverse riprap constructed through the dikes at Emergency Spillway Station 55+00 will protect against upstream erosion of the dikes.

The SITES modeling for the 24-hour General Storm PMF shows increased headcut erosion of 12.2 feet approaching the Emergency Spillway structure. The Emergency Spillway structure would be protected by the riprap apron at the downstream edge of the structure, which is designed for erosion depths of 20 feet. However, the riprap on the dikes immediately downstream of the Emergency Spillway structure is designed to protect against erosion to depths of 10 feet. Therefore, URS recommends the depth of riprap on the left and right dikes be increased to 12 feet below the channel bottom between the downstream edge of the Emergency Spillway structure and Emergency Spillway Station 47+00.

URS also recommends the District and Hoskin-Ryan evaluate the quantity of riprap proposed for the riprap apron downstream of the concrete-covered pipelines. The riprap apron at the pipelines could be designed similar to the riprap apron at the Emergency Spillway structure, thus reducing the quantity of riprap required. If this change is made, the depth of the riprap on the dikes should be maintained as shown on the drawings (see Appendix A) at a depth 20 feet below the channel bottom and a distance of 40 feet downstream of the pipelines.

Adobe versions of the memorandum and appendices, and the electronic versions or the scour and SITES models, are provided in Appendix D.

References

USBR 1984. *Computing Degradation and Local Scour.* Pemberton, E. L., Lara, J. M. United States Bureau of Reclamation.

APPENDIX D – EXCAVATION MONITORING AND INSPECTION CRITERIA MEMORANDUM

GEOLOGICAL CONSULTANTS INC

KENNETH M. EUGE, R.G.

Memorandum

August 3, 2010

To: Paul Hoskin, P.E.
Hoskin Ryan Consultants

From: Ken Euge, R.G

Subject: Suggested Criteria for Caliche Hardness Check
Pipe Line Excavation in White Tanks FRS No. 3 Emergency Spillway Crossing
White Tanks FRS No. 3 Outlet Channel
GCI Project No. 2009-129

Special Provision Subsection 604.3.1-Cut-off Trench Excavation specifies that the cutoff trench excavation shall be continuously monitored to determine if changes in the depth of excavation are warranted based on the soil (caliche) conditions exposed. We recommend this section of the Special Provisions, or some other appropriate section, be revised to include monitoring of the soil conditions exposed in the pipeline excavation through the emergency spillway.

The purpose of the monitoring and special inspections by the Engineer or his designated representative is to determine if caliche-cemented soils, especially soils cemented to a rock-like consistency, are present along the pipeline and cutoff alignment and if the caliche-cemented soils exhibit adequate strength, continuity, and erosion resistance that would justify the modification or the elimination of the cutoff excavation to the depths specified in the project plans.

In order to make the determination of the caliche-cemented soil strength, continuity, and erosion resistance, we suggest the following criteria be implemented as part of the monitoring program:

- Visually examine the soil conditions exposed within consecutive 200-foot segments of the excavation.
- Prepare a graphical log of each slope segment within the excavation to characterize the soil layering (stratification) including layer thicknesses, continuity, and soil structures.
- Describe the soil units exposed per ASTM D2488 Standard practice for Description and Identification of Soils (Visual-Manual Procedure).
- Conduct field tests to determine the representative unconfined compressive strength of soil layer, or layers, using a Pocket Penetrometer (a minimum of five tests shall be made to determine an average representative strength value) in each soil layer encountered in the pipeline trench or the cutoff segment along the alignment.

2333 West Northern Avenue, Ste 1A, Phoenix, Arizona 85021 | toll free 888.774.2756 | phone 602.864.1888 | fax 602.864.1899 | www.geologicalconsultants.com

- Where the Pocket Penetrometer test results are greater than 4.5 tons per square foot, conduct additional field testing to determine estimated strength according to ASTM D-5878 Standard Guides for Using Rock-Mass Classification Systems for Engineering Purposes, subsections 4.1.4 Unified Rock Classification System and subsections 5.1.4 URCS Uniaxial compressive strength, and 6.1.4 URCS Guide D, Estimated Strength.
- Assess the qualitative excavateability of the caliche-cemented soils as the trench and cutoff excavation progresses through the WT FRS #3 emergency spillway channel.
- Coordinate the inspection and monitoring activities with District, ADWR Division of Dam Safety, NRCS, Hoskin Ryan Consultants, and the contractor.
- Notify the Engineer if significant portions 200-foot segments of the pipeline and cutoff excavation encounter caliche-cemented soils that are determined, based on the monitoring program findings, to be non-erosive. Assist the Engineer, as requested, prepare modifications to the cutoff excavation that may be dictated by the findings from the excavation monitoring program
- A summary of the results of the excavation inspection and monitoring program shall be provided to the Engineer on a weekly basis and a compilation of the inspection monitoring shall be included in a Summary Report which will be submitted within two weeks following the completion of the Outfall Channel segment through the Emergency Spillway.

APPENDIX E – COST ESTIMATE

WHITE TANKS FRS#3 OUTLET CHANNEL - ENGINEER'S ESTIMATE

3/2/2011

FCD 2009C012
PCN 470.04.32

ITEM NO.	ITEM DESCRIPTION	UNIT	TOTAL QUANTITY	ENGINEER'S ESTIMATE UNIT PRICE	ENGINEER'S ESTIMATE BID TOTAL
	GENERAL CONDITIONS				
105-1	PARTNERING ALLOWANCE	LS	1	$20,000.00	$20,000.00
107-1	AZDPES/SWPPP PERMITS	LS	1	$100,000.00	$100,000.00
107-2	PUBLIC INFORMATION & NOTIFICATION ALLOWANCE	LS	1	$20,000.00	$20,000.00
107-3	PROJECT SIGNS ALLOWANCE	LS	1	$5,000.00	$5,000.00
107-4	VANDALISM ALLOWANCE	LS	1	$25,000.00	$25,000.00
	EARTHWORK				
201-1	CLEARING AND GRUBBING	LS	1	$190,452.00	$190,452.00
202-1	MOBILIZATION	LS	1	$150,000.00	$150,000.00
211-1	ENGINEERED FILL	CY	34,448	$7.00	$241,136.00
211-2	LANDSCAPE FILL	CY	334,027	$1.90	$634,651.30
211-3	SELECT FILL	CY	484	$50.00	$24,200.00
215-1	CHANNEL GRADING	CY	358,993	$3.50	$1,256,475.50
215-2	LOW FLOW GRADING	CY	7,098	$3.50	$24,843.00
215-3	LANDSCAPE GRADING	CY	8,672	$1.90	$16,476.80
215-4	MISCELLANEOUS CHANNEL GRADING	CY	45,883	$3.50	$160,590.50
220-1	PLAIN RIPRAP (D_{50}=9")	CY	7,064	$58.00	$409,712.00
220-2	PLAIN RIPRAP (D_{50}=18")	CY	949	$65.00	$61,685.00
220-3	PLAIN RIPRAP (D_{50}=20")	CY	14,861	$65.00	$965,965.00
220-4	GROUTED RIPRAP (D_{50}=9")	CY	1,093	$150.00	$163,950.00
	STREETS & RELATED WORK				
310-1	4-INCH ABC MAINTENANCE RAMP, ROAD & TRAIL	SY	14,590	$6.00	$87,540.00
321-1	AC MAINTENANCE ROAD PAVEMENT SECTION (2" AC OVER 6" ABC)	SY	28,615	$25.00	$715,375.00
321-2	PAVED TURNOUT PER MAG STD DET 205, TYPE 'C' (2-1/2" AC OVER 6" ABC)	SY	1,101	$27.00	$29,727.00
321-3	AC LOCAL ROAD PAVEMENT SECTION	SY	1,116	$27.00	$30,132.00
321-4	AC COLLECTOR ROAD PAVEMENT SECTION	SY	905	$35.00	$31,675.00
321-5	AC MINOR ARTERIAL ROAD PAVEMENT SECTION	SY	1,656	$39.00	$64,584.00
321-6	SAWCUT, REMOVE & REPLACE EXISTING PAVEMENT PER MAG STD DET 200, 'T-TOP '	SY	6,128	$45.00	$275,760.00
321-7	THICKENED EDG, PER MAG STD DET 201, TYPE A	LF	39,205	$5.00	$196,025.00
321-8	SAWCUT, REMOVE & REPLACE EXISTING PAVEMENT, 2' MIN. (MATCH EXISTING)	SY	172	$45.00	$7,740.00
321-9	20'-WIDE TEMPORARY ACCESS PAVEMENT, 2-1/2" AC OVER 6" ABC	SY	850	$45.00	$38,250.00
340-1	6" VERTICAL CURB & GUTTER, PER MAG STD DET 220, TYPE 'A'	LF	920	$15.00	$13,800.00

340-2	4" ROLLED CURB & GUTTER, PER MAG STD DET 220, TYPE 'C'	LF	120	$15.00	$1,800.00
340-3	5' CONCRETE SIDEWALK, PER MAG STD DET 230	SF	840	$5.00	$4,200.00
340-4	4' CONCRETE SIDEWALK, PER MAG STD DET 230	SF	3,512	$5.00	$17,560.00
340-5	16'-WIDE CONCRETE DRIVEWAY ENTRANCE, PER MAG STD DET 250-2	SF	1,189	$7.00	$8,323.00
340-6	CONCRETE VALLEY GUTTER, PER MAG STD DET 240, 3' WIDE	SF	842	$7.00	$5,894.00
340-7	CURB TERMINATION PER MAG STD DET 222	EA	8	$37.50	$300.00
344-1	2-INCH DG OVER 4-INCH ABC	SY	4,573	$5.00	$22,865.00
345-1	ADJUST MANHOLE FRAME & COVER, PER MAG STD DET 422	EA	5	$450.00	$2,250.00
345-2	ADJUST VALVE BOX AND COVER, PER MAG STD DET 270	EA	1	$300.00	$300.00
345-3	ADJUST METAL RECLAIMED WATER BOX COVER TO GRADE	EA	1	$450.00	$450.00
350-1	MISCELLANEOUS REMOVAL	LS	1	$65,000.00	$65,000.00
350-2	REMOVE EXISTING FENCE	LF	9,020	$1.20	$10,824.00
350-3	REMOVE EXISTING BLOCK WALL, RETAINING WALL	LF	2,177	$14.00	$30,478.00
350-4	REMOVE EXISTING CONCRETE CURB & GUTTER	LF	287	$6.00	$1,722.00
350-5	REMOVE EXISTING PIPE	LF	130	$20.00	$2,600.00
350-6	REMOVE EXISTING ASPHALT PAVEMENT	SF	25,418	$1.00	$25,418.00
350-7	REMOVE EXISTING CONCRETE SIDEWALK	SF	1,470	$3.00	$4,410.00
350-8	REMOVE GROUTED RIPRAP	SY	4,447	$19.00	$84,493.00
350-9	REMOVE EXISTING CONCRETE LINED CHANNEL	SY	2,523	$19.00	$47,937.00
350-10	RELOCATE AND REINSTALL EXISTING SIGN	EA	11	$150.00	$1,650.00
350-11	REMOVE EXISTING HEADWALL	EA	2	$500.00	$1,000.00
350-12	REMOVE AND REPLACE EXISTING SPILLWAY	EA	1	$5,000.00	$5,000.00
	RIGHT-OF-WAY AND TRAFFIC CONTROL				
401-1	MISCELLANEOUS TRAFFIC CONTROL	LS	1	$100,000.00	$100,000.00
401-2	BARRICADE, MAG STD DET 130, TYPE A	LF	50	$80.00	$4,000.00
421-1	4-STRAND SMOOTH WIRE FENCE	LF	34,199	$5.00	$170,995.00
421-2	INSTALL MAINTENANCE GATE - TYPE 1, PER SPECIAL DETAIL D05	EA	31	$2,000.00	$62,000.00
421-3	INSTALL MAINTENANCE GATE - TYPE 3, PER SPECIAL DETAIL D05	EA	5	$1,500.00	$7,500.00
421-4	HORSE FENCE ALLOWANCE	LS	1	$5,000.00	$5,000.00
	LANDSCAPE				
430-1	SALVAGE AND REPLANT CACTI	EA	50	$100.00	$5,000.00
430-2	SALVAGE AND REPLANT SAGUARO	EA	13	$2,080.00	$27,040.00
430-3	SALVAGE AND REPLANT OCOTILLO	EA	2	$175.00	$350.00
430-4	HYDROSEED MIX 'A'	SY	556,188	$1.43	$795,348.13
430-5	HYDROSEED MIX 'B'	SY	73,639	$1.38	$101,621.72
430-6	LANDSCAPE WATER MANAGEMENT ALLOWANCE	LS	1	$40,000.00	$40,000.00
430-7	DECOMPOSED GRANITE	SY	800	$2.65	$2,121.27
430-8	TALL POT TREES - BLUE PALO VERDE PLANTING	EA	701	$50.00	$35,050.00
430-9	TALL POT TREES - LITTLE-LEAF PALO VERDE PLANTING	EA	699	$50.00	$34,950.00
430-10	TALL POT TREES - IRONWOOD PLANTING	EA	257	$50.00	$12,850.00
430-11	TALL POT TREES - VELVET MESQUITE PLANTING	EA	803	$50.00	$40,150.00
432-1	ROCK MULCH, 3" MINUS	SY	230,118	$3.90	$897,461.18

460-1	3.5 FOOT X 2.5 FOOT X 2 FOOT LANDSCAPE BOULDER	EA	660	$90.00	$59,400.00
460-2	4 FOOT X 3 FOOT X 2.5 FOOT LANDSCAPE BOULDER	EA	289	$130.00	$37,570.00
460-3	5 FOOT X 3.5 FOOT X 3 FOOT LANDSCAPE BOULDER	EA	77	$220.00	$16,940.00
460-4	EXISTING LARGE BOULDER SALVAGE AND REPLACEMENT	EA	18	$1,200.00	$21,600.00
460-5	SIMULATED DESERT VARNISH FOR EXISTING STRUCTURES	SY	179	$1.80	$322.20
	STRUCTURES				
505-1	CONCRETE CHANNEL LINING (7" THICK)	SF	16,538	$8.00	$132,304.00
505-2	CONCRETE BOX CULVERT (2 BARREL 10' x 7'), PER ADOT STD DET B-02.20	LF	400	$826.00	$330,400.00
505-3	CONCRETE BOX CULVERT (1 BARREL 16' x 7') PER SPECIAL DETAIL ST03	LF	1,486	$865.00	$1,285,390.00
505-4	CONCRETE BOX CULVERT CUTOFF WALLS AND INLET/OUTLET APRON	CY	333	$425.00	$141,525.00
505-5	CONCRETE BOX CULVERT HEADWALLS, WINGWALLS AND U-CHANNEL WALLS	SF	13,833	$38.12	$527,324.21
505-6	CONCRETE GRADE CONTROL STRUCTURE APRON AND CUTOFF WALLS	CY	1,604	$425.00	$681,700.00
505-7	CONCRETE SIDE FLOW SPILLWAY APRON AND CUTOFF WALLS	CY	483	$425.00	$205,275.00
505-8	CONCRETE DROP INLET STRUCTURE	CY	46	$425.00	$19,550.00
505-9	GROUTED RIPRAP DOWNDRAIN (D_{50}=9") PER SPECIAL DETAIL D11	CY	570	$250.00	$142,575.00
505-10	CONCRETE RESTRICTION STRUCTURE APRON AND CUTOFF WALLS	CY	60	$425.00	$25,500.00
505-11	CONCRETE PRINCIPAL SPILLWAY STRUCTURE	CY	116	$425.00	$49,300.00
505-12	CONCRETE HEADWALL FOR SINGLE-18" PIPE, PER MAG STD DET 501-1 AND 501-2	EA	12	$1,900.00	$22,800.00
505-13	CONCRETE HEADWALL FOR SINGLE-18" PIPE, PER MAG STD DET 501-4	EA	3	$3,000.00	$9,000.00
505-14	CONCRETE HEADWALL FOR DOUBLE 18" PIPE, PER MAG STD DET 501-4	EA	5	$4,500.00	$22,500.00
505-15	CONCRETE HEADWALL FOR DOUBLE 48" PIPE, PER MAG STD DET 501-4	EA	3	$5,500.00	$16,500.00
505-16	STORM SEWER MANHOLE PER MODIFIED COP STD DET P1560 & MAG 522 (SPECIAL DETAIL D09)	EA	14	$8,000.00	$112,000.00
505-17	STORM SEWER MANHOLE PER COP STD DET P1520 & MAG 522	EA	2	$4,000.00	$8,000.00
505-18	CATCH BASIN PER MAG STD DET 530	EA	2	$3,000.00	$6,000.00
505-19	CATCH BASIN PER MAG STD DET 535	EA	1	$2,300.00	$2,300.00
505-20	CONCRETE HEADWALL PER ADOT STD DETAIL B-11.14	EA	2	$5,500.00	$11,000.00
505-21	CONCRETE GRADE CONTROL STRUCTURE RETAINING WALLS	SF	20,800	$38.12	$792,911.41
505-22	CONCRETE SIDE FLOW SPILLWAY RETAINING WALLS	SF	3,596	$38.12	$137,082.18
505-23	CONCRETE RESTRICTION STRUCTURE RETAINING WALLS	SF	990	$38.12	$37,739.53
505-24	8-INCH PORTLAND CEMENT CONCRETE CROSSING	CY	182	$425.00	$77,359.76
510-1	CONCRETE BLOCK MASONRY WALL	SF	3,044	$40.00	$121,760.00
510-2	CONCRETE BLOCK MASONRY RETAINING WALL, 2' TO 3'	SF	139	$50.00	$6,950.00
515-1	REMOVABLE BOLLARDS PER DETAIL SHEET D02	EA	58	$392.00	$22,736.00
515-2	TRASH RACK FOR 1-16'x7' CBC, PER SPECIAL DETAIL D04	EA	1	$1,000.00	$1,000.00
515-3	TRASH RACK FOR 1-10'x7' CBC, PER SPECIAL DETAIL D04	EA	2	$1,000.00	$2,000.00
515-4	TRASH RACK FOR 78" PIPE, PER SPECIAL DETAIL D04	EA	1	$1,000.00	$1,000.00
515-5	TRASH RACK FOR 66" PIPE, PER SPECIAL DETAIL D04	EA	1	$1,000.00	$1,000.00
515-6	STORM SEWER ACCESS BARRIER FOR 78" PIPE, PER SPECIAL DETAIL D03	EA	1	$1,020.00	$1,020.00
515-7	STORM SEWER ACCESS BARRIER FOR 66" PIPE, PER SPECIAL DETAIL D03	EA	1	$1,020.00	$1,020.00
515-8	STORM SEWER ACCESS BARRIER FOR 1-16'x7 CBC, PER SPECIAL DETAIL D03	EA	1	$1,020.00	$1,020.00
515-9	STORM SEWER ACCESS BARRIER FOR 1-10'x7' CBC, PER SPECIAL DETAIL D03	EA	2	$1,020.00	$2,040.00
515-10	6' STEEL VIEW FENCE	LF	226	$60.00	$13,560.00
515-11	4' STEEL VIEW FENCE	LF	2,236	$40.00	$89,440.00

515-12	INSTALL MAINTENANCE GATE - TYPE 2, PER SPECIAL DETAIL D05	EA	5	$1,400.00	$7,000.00
520-1	STEEL HANDRAIL, PER SPECIAL DETAIL D02, TYPE 1	LF	7,474	$75.00	$560,550.00
520-2	STEEL HANDRAIL, PER SPECIAL DETAIL D02, TYPE 2	LF	140	$75.00	$10,500.00
	WATER AND SEWER				
601-1	UTILITY CONDUIT JOINT TRENCH EXCAVATION, BACKFILL AND COMPACTION	LF	176	$6.00	$1,056.00
602-1	24-INCH STEEL CASING	LF	116	$220.00	$25,520.00
602-2	8-INCH CASING SLEEVE	LF	176	$50.00	$8,800.00
602-3	5-INCH CASING SLEEVE	LF	352	$40.00	$14,080.00
602-4	4-INCH CASING SLEEVE	LF	352	$40.00	$14,080.00
602-5	2-INCH CASING SLEEVE	LF	704	$40.00	$28,160.00
604-1	1-1/2 SACK CLSM SLURRY BACKFILL	CY	3,905	$50.00	$195,250.00
618-1	78-INCH HDPE PIPE CULVERT	LF	2,979	$320.00	$953,280.00
618-2	66-INCH HDPE PIPE CULVERT	LF	2,982	$280.00	$834,960.00
618-3	48-INCH RGRCP PIPE CULVERT	LF	634	$160.00	$101,440.00
618-4	36-INCH RGRCP PIPE CULVERT	LF	21	$150.00	$3,150.00
618-5	18-INCH RGRCP PIPE CULVERT	LF	1,776	$72.00	$127,872.00
618-6	PIPE PLUG PER MAG STD DETAIL 427	EA	9	$500.00	$4,500.00
620-1	78-INCH CIPP PIPE CULVERT	LF	1,319	$260.00	$342,940.00
620-2	66-INCH CIPP PIPE CULVERT	LF	1,322	$253.00	$334,466.00
TOTAL DOLLARS					**$17,410,674.69**
	Engineering Contingencies for Unknown Items			10%	**$1,741,067.47**
	TOTAL CONSTRUCTION COST				**$19,151,742.15**