SONOKAI WASH

FLOOD CONTROL DISTRICT
MARICOPA COUNTY

AERIAL MAPPING
SURVEY CONTROL

Prepared By:
Collins/Piña Consulting Engineers, Inc.
40 East Virginia Ave., Suite 200
Phoenix, AZ 85004
(602) 264-7505
(602) 264-0568 fax
CP NO. 3905

For:
Entellus
2255 North 44th Street, Suite 330
Phoenix, AZ 85008
(602) 244-2566
(602) 244-8947 fax

Collins/Piña
Consulting Engineers, Inc.

COLLINS-PIÑA
CONSULTING ENGINEERS, INC.
40 EAST VIRGINIA AVENUE, SUITE 200
PHOENIX, ARIZONA 85004

Phone (602) 264-7505

RECEIVED
JUL 28 1998
Entellus

LETTER OF TRANSMITTAL

DATE: 7/28/98	JOB NO. 3905
ATTENTION: Hernan Aristizabal	
Sonakai Wash	

TO Entellus
2255 N. 44th St., Ste. 330
Phoenix, AZ 85008

WE ARE SENDING YOU (X) Attached ( ) Under separate cover via _____ the following items:

( ) Shop drawings ( ) Prints ( )Plans ( )Samples ( )Specifications

( ) Copy of letter ( )Change order (x) Reports

COPIES	DATE	NO.	DESCRIPTION
4		Ea	Report

THESE ARE TRANSMITTED as checked below:

( ) For approval
(X) For your use
(X) As requested
( ) For review and comment
( ) FOR BIDS DUE _____ 19__

( ) Approved as submitted
( ) Approved as noted
( ) Returned for corrections
( ) _____

( ) Resubmit _____ copies for approval
( ) Submit _____ copies for distribution
( ) Return _____ corrected prints
( ) PRINTS RETURNED AFTER LOAN TO US

REMARKS: Please call if you have any questions.

COPY TO: 3905

SIGNED: _____
Art Witzell P.L.S.

IF ENCLOSURES ARE NOT AS NOTED, PLEASE NOTIFY US AT ONCE.

97-11

SONOKAI WASH

FLOOD CONTROL DISTRICT
MARICOPA COUNTY

AERIAL MAPPING
SURVEY CONTROL

Property of
Flood Control District of MC Library
Please Return to
2801 W. Durango
Phoenix, AZ 85009

Prepared By:
Collins/Piña Consulting Engineers, Inc.
40 East Virginia Ave., Suite 200
Phoenix, AZ 85004
(602) 264-7505
(602) 264-0568 fax
CP NO. 3905

For:
Entellus
2255 North 44th Street, Suite 330
Phoenix, AZ 85008
(602) 244-2566
(602) 244-8947 fax

FEDERAL EMERGENCY MANAGEMENT AGENCY CERTIFICATION BY REGISTERED PROFESSIONAL ENGINEER AND/OR LAND SURVEYOR FORM	O.M.B. Bureau No. 3067-0148 Expires July 31, 1997	FEMA USE ONLY

PUBLIC BURDEN DISCLOSURE NOTICE

Public reporting burden for this form is estimated to average .23 hour per response. The burden estimate includes the time for reviewing instructions, searching existing data sources, gathering and maintaining the needed data, and completing and reviewing the form. Send comments regarding the accuracy of the burden estimate and any suggestions for reducing this burden, to: Information Collections Management, Federal Emergency Management Agency, 500 C Street, S.W., Washington, DC 20472; and to the Office of Management and Budget, Paperwork Reduction Project (3067-0148), Washington, DC 20503.

1. This certification is in accordance with 44 CFR Ch. I, Section 65.2
2. I am licensed with an expertise in Land Surveying
   [example: water resources *(hydrology, hydraulics, sediment transport, interior drainage)** structural, geotechnical, land surveying.]
3. I have 18 years experience in the expertise listed above.
4. I have ☒ prepared ☐ reviewed the attached supporting data and analyses related to my expertise.
5. I ☒ have ☐ have not visited and physically viewed the project.
6. In my opinion, the following analyses and/or designs, is/are being certified:
   Horizontal and Vertical control for aerial photogrammetry
7. Base upon the following review, the modifications in place have been constructed in general accordance with plans and specifications.

   Basis for above statement: (check all that apply)

   a. ☐ Viewed all phases of actual construction.
   b. ☐ Compared plans and specifications with as-built survey information.
   c. ☐ Examined plans and specifications and compared with completed projects.
   d. ☒ Other N/A
8. All information submitted in support of this request is correct to the best of my knowledge. I understand that any false statement may be punishable by fine or imprisonment under Title 18 of the United States Code, Section 1001.

Name: Arthur A. Witzell, PLS
(please print or type)

Title: Survey Supervisor, Phoenix Division
(please print or type)

Registration No. 26412 Expiration Date: 09/30/98

State Arizona

Type of License Registered Land Surveyor

Signature

Date

REGISTERED LAND SURVEYOR
CERTIFICATE NO.
26412
ARTHUR A.
WITZELL
Date Signed 7/27/98
ARIZONA, U.S.A.

Seal
(Optional)

*Specify Subdiscipline

Note: Insert not applicable (N/A) when statement does not apply.

AVERY

ELEVATION CONVERSION
NGVD29 to NAVD88

NGVD29 + 2.23 FEET (OR + 0.67 METERS) = NAVD88

THIS ELEVATION CONVERSION DERIVED BY DIFFERENTIAL LEVELING USING NGS MONUMENT S364, RETRIEVAL DATE JANUARY 6, 1997, NEAR THE INTERSECTION OF ELLSWORTH ROAD AND RITTENHOUSE ROAD.

AERIAL CONTROL PANELS

No.	North	East	Elev	Panel	Descrip
100	820965.5036	770545.2019	1346.45	PANEL 100	BCHH (MCHDW 1/4 COR SEC 18 T2S R7E)
101	819579.4187	769273.4032	1346.96	PANEL 101	1/2" REBAR SET
102	818308.2054	767935.1813	1342.83	PANEL 102	1/2" REBAR SET
103	816836.4820	767891.7484	1341.34	PANEL 103	1/2" REBAR SET
104	818341.1306	769293.8767	1347.81	PANEL 104	1/2" REBAR SET
105	818908.5343	770569.9954	1352.13	PANEL 105	PK NAIL SET
106	816895.7959	770575.7890	1350.90	PANEL 106	PK NAIL SET
107	815623.0490	770584.5403	1351.81	PANEL 107	1/2" REBAR HH (W1/4 COR SEC 19 T2S R7E)
109	818226.5880	773086.6246	1358.65	PANEL 109	PK NAIL SET
110	816769.3196	775724.8165	1367.51	PANEL 110	PK NAIL SET
111	815475.5663	774288.7957	1359.08	PANEL 111	PK NAIL SET
112	814615.0697	773434.0231	1359.20	PANEL 112	PK NAIL SET
113	812871.2583	771880.7423	1356.86	PANEL 113	PK NAIL SET
114	812777.6901	775735.2482	1368.62	PANEL 114	BCHH (NO STAMP, NW COR SEC 29 T2S R7E)
115	814897.8567	778365.7823	1375.42	PANEL 115	BC (TOWN OF QUEEN CREEK)
116	811563.4155	777353.4129	1374.80	PANEL 116	PK NAIL SET
117	810115.6988	775740.1179	1373.40	PANEL 117	AC (NO STAMP, W1/4 COR SEC 29 T2S R7E)
118	808194.5392	776862.8275	1380.81	PANEL 118	1/2" REBAR SET
119	809693.4925	778973.0760	1386.01	PANEL 119	1/2" REBAR SET
120	811526.1980	779804.9767	1381.36	PANEL 120	PK NAIL SET
121	811929.1396	781030.3031	1386.45	PANEL 121	PK NAIL SET
122	809742.1440	783275.6510	1392.99	PANEL 122	1/2" REBAR SET
123	808583.2752	781018.9450	1383.47	PANEL 123	PK NAIL SET
124	806113.6472	779676.8038	1393.38	PANEL 124	1/2" REBAR SET
125	804839.8752	781034.8738	1400.92	PANEL 125	COTTON SPINDLE (W1/4 COR SEC 33 T2S R7E)
126	806252.4191	783700.0327	1396.25	PANEL 126	CONC. NAIL SET
127	807534.8010	786298.1296	1401.67	PANEL 127	BCHH (MCHD NW COR SEC 34 T2S R7E)
128	803556.5381	783047.9308	1411.64	PANEL 128	1/2" REBAR SET
129	803634.7399	785074.0768	1421.02	PANEL 129	1/2" REBAR SET
130	804890.4792	786304.4369	1417.03	PANEL 130	BCHH (NO STAMP W1/4 COR SEC 34 T2S R7E)
131	803607.4466	787680.8718	1430.04	PANEL 131	1/2" REBAR SET
132	804857.8714	787914.3809	1421.82	PANEL 132	1/2" REBAR SET
133	802273.9481	787744.1998	1445.11	PANEL 133	PK NAIL SET
134	801067.4901	786304.4599	1456.81	PANEL 134	PK NAIL SET
200	820669.3567	759938.3561	1326.68	PANEL 200	BCHH (ADOT W1/4 COR SEC 14 T2S R6E)
201	818548.3431	759945.5233	1317.66	PANEL 201	PK NAIL SET
202	818001.6313	759934.8878	1316.62	PANEL 202	BCHH (ADOT NW COR SEC 23 T2S R6E)
203	817321.0662	759928.1860	1315.96	PANEL 203	PK NAIL SET
204	815333.2727	759954.1100	1317.37	PANEL 204	BCHH (ADOT W 1/4 COR SEC 23 T2S R6E)
207	818673.4849	762549.5622	1322.71	PANEL 207	1/2" REBAR SET
208	820582.5993	762544.5661	1325.12	PANEL 208	1/2" REBAR SET
209	820640.4316	765160.3534	1336.19	PANEL 209	X FND IN CONC.
210	818841.9667	765247.3974	1332.99	PANEL 210	1/2" REBAR SET
211	817999.0872	765210.2180	1333.09	PANEL 211	1/2" REBAR SET
212	817321.1756	765231.4848	1331.06	PANEL 212	1/2" REBAR SET
213	815306.8789	765233.5543	1332.28	PANEL 213	1/2" REBAR SET
214	815384.2277	767925.6787	1341.64	PANEL 214	PK NAIL SET
215	820786.1523	767866.7331	1341.25	PANEL 215	1/2" REBAR SET

ALL PANEL POINTS ARE LID 14, CODE HV3, HORIZONTAL 3RD ORDER CLASS 1 (FGCC 1984), AND VERTICAL 3RD ORDER (FGCC 1984)

SONOKAI WASH ERM's

ERM # DESCRIPTION
NORTHING EASTING ELEV.

1401 MCHD BC IN HH RIGGS & ELLSWORTH, SE COR SEC 28, T2S, R7E
807534.8010 786298.1296 1401.50

1368 BC IN HH (NOT STAMPED) CHANDLER HTS E. OF SOSSAMAN, NW COR SEC 29, T2S R7E
812777.6901 775735.2482 1368.33

1351 REBAR IN HH BROOKS FARMS & POWERS, W 1/4 CORNER, SEC 19, T2S, R7E
815623.0490 770584.5403 1351.34

1316 ADOT BC HH HIGLEY, W 1/4 COR SEC. 23, T2S, R6E
815333.2727 759954.1100 1316.35

1352 REBAR IN HH POWER & CHANDLER HTS., SW COR SEC 19, T2S, R7E
812871.2583 771880.7423 1352.71

1315 ADOT BC IN HH NW COR SEC 23, T2S, R6E
818001.6313 759934.8878 1315.78

1346 MCHD BC IN HH POWER RD., W 1/4 COR SEC 18, T2S, R7E
820965.5036 770545.2019 1346.09

1416 MCHD BC IN HH SANTAN BLVD & ELLSWORTH RD., E 1/4 SEC 33, T2S, R7E
814890.4792 786304.4369 1416.66

1326 ADOT BC IN HH W. 1/4 COR SEC 14, T2S, R6E
820669.3567 759938.3561 1326.01

ALL POINTS ARE LID14, CODE HV3, HORIZONTAL 3RD ORDER, CLASS 1 (FGCC 1984) AND VERTICAL 3RD ORDER (FGCC 1984)

should be 804890.4792

AVERY

```
1,5000.0000000000,5000.0000000000,1375.0000000000,START
16,815513.3357000001,786266.7985000000,1401.2600000000,panel
17,814915.6427000000,786270.9555000000,1401.8600000000,panel
68,815117.1457000000,794086.0925000000,1424.6900000000,g68
69,828701.9685000000,786118.0085000000,1390.8500000000,nw sec 10
70,823421.0000000000,786118.0085000000,1394.5500000000,ell qc
134,812827.5449108273,786281.3814986371,1894.4976445430,rim ell ch
135,807536.3794367858,786298.5126457717,1894.9545830598,panel 127
136,807536.3814924250,786298.5253824119,1894.9298831809,panel 127
137,807536.3794551026,786298.5194415508,1894.9241830854,panel 127
138,807536.3824847646,786298.5185839045,1894.9043831919,panel 127
139,807536.4312930186,786297.8787948480,1895.5095826120,panel 127
elev
140,807536.4302846694,786297.8796470381,1895.4600825786,panel 127
elev
141,807536.4403911408,786297.8796197969,1895.4565829442,panel 127
elev
142,804892.1416253166,786304.3537972999,1910.6180409865,panel 130
elev
143,804892.1264885108,786304.3623335951,1910.5994404702,panel 130
elev
144,804892.1244420363,786304.3529940655,1910.5690403619,panel 130
elev
145,804892.2551008533,786304.8334864464,1910.0099468506,panel 130
146,804892.2570946706,786304.8232864884,1910.0699468853,panel 130
147,804892.2419280908,786304.8207787147,1910.0776463274,panel 130
148,804859.6800422161,787914.6751594378,1915.6457704982,panel 132
149,804859.6911569935,787914.6742793710,1915.6261708971,panel 132
150,804859.5666632259,787914.6075067336,1915.5865661484,panel 132
151,802275.8956313008,787744.4782841634,1938.6087701069,panel 133
152,802275.9219383281,787744.4892571070,1938.5965710989,panel 133
153,802275.9158581524,787744.4833264467,1938.5602708572,panel 133
154,803609.2917926759,787681.1594568322,1923.8461776955,panel 131
155,803609.3221236836,787681.1636217025,1923.8405788081,panel 131
156,803609.3231180478,787681.1576718874,1923.8384788222,panel 131
157,801069.5611689214,786304.8665878966,1950.3080491849,panel 134
158,801069.5277421058,786304.8386395352,1950.2824478732,panel 134
159,801069.5348234873,786304.8411694113,1950.2814481386,panel 134
160,803636.6053456662,785074.5580938269,1914.7978092834,panel 129
161,803636.6103763242,785074.5495846383,1914.8145094342,panel 129
162,803636.5952414577,785074.5589702607,1914.8467089211,panel 129
163,803558.4039109016,783048.5556632308,1905.4503521859,panel 128
164,803558.4120181086,783048.5641380451,1905.4288525103,panel 128
165,803558.4069340231,783048.5522570539,1905.4393522828,panel 128
166,806254.0952660099,783700.6139502244,1890.0337678025,panel 126
167,806254.0861657432,783700.6122750011,1890.0500674671,panel 126
```

168,806254.0942420445,783700.6088558355,1890.0656677468,panel 126
169,804841.6452954479,781035.6484616240,1894.4384975079,panel 125
cp
170,804841.6543783536,781035.6433413284,1894.4347978177,panel 125
cp
171,804841.6533849201,781035.6501402359,1894.4482978067,panel 125
cp
172,804842.0274748127,781035.7086617288,1894.7353115552,panel 125
elev
173,804842.0173704890,781035.7095368495,1894.7297111928,panel 125
elev
174,804842.0234386709,781035.7112205937,1894.7057114185,panel 125
elev
175,806115.3226529597,779677.6662287504,1887.1871979685,panel 124
176,806115.3307677349,779677.6781017613,1887.1810983056,panel 124
177,806115.3368485345,779677.6848827507,1887.1632985505,panel 124
178,808584.7842538779,781019.7283475152,1877.1237587796,panel 123
179,808584.7700553382,781019.7088460955,1877.1256581945,panel 123
180,808584.7791834360,781019.7215647447,1877.1011585713,panel 123
181,810115.8527287772,775740.6991132330,1867.2119954535,panel 117
182,810115.8628111498,775740.6888964593,1867.1905957808,panel 117
183,810115.8617542600,775740.6693625487,1867.2265956709,panel 117
184,809694.9147511397,778973.9959834774,1879.8097209328,panel 119
185,809694.9117213043,778973.9968403758,1879.8010208263,panel 119
186,809694.9157890468,778974.0070233860,1879.8219210108,panel 119
187,809995.4581995597,778641.7812594634,1874.1913760259,s side rr
tie
188,809995.4399911588,778641.7745089061,1874.1648753424,s side rr
tie
189,809995.4410018076,778641.7745064227,1874.1673753789,s side rr
tie
190,808194.7454695313,776863.2995685316,1874.6024092334,panel 118
191,808194.8183301308,776863.3384686984,1874.6043120119,panel 118
192,808194.8112494608,776863.3359373321,1874.6077117465,panel 118
193,808194.7819243043,776863.3292120809,1874.5976106609,panel 118
194,811930.3904362753,781031.0730748589,1880.1477380334,panel 121
195,811930.3965152260,781031.0790050097,1880.1402382751,panel 121
196,811930.4045939915,781031.0764364628,1880.1395385580,panel 121
197,811930.4005578281,781031.0789947747,1880.1424384213,panel 121
198,809743.5610191966,783276.2612707695,1886.6746542273,panel 122
199,809743.5640467322,783276.2595640586,1886.7013543305,panel 122
200,809743.5610214071,783276.2621201889,1886.7115542305,panel 122
201,809729.0169846329,783282.9891421137,1887.5144527181,monitor we
ll
202,809729.0008009728,783282.9840877054,1887.5213521141,monitor we
ll

203,809729.0078976285,783282.9925634384,1887.5256524019,monitor we
ll

```
1,5000.0000000000,5000.0000000000,1375.0000000000,START
16,815513.3357000001,786266.7985000000,1401.2600000000,panel
17,814915.6427000000,786270.9555000000,1401.8600000000,panel
68,815117.1457000000,794086.0925000000,1424.6900000000,g68
69,828701.9685000000,786118.0085000000,1390.8500000000,nw sec 10
70,823421.0000000000,786118.0000000000,1394.5500000000,ell qc
204,811929.1986327925,781030.5632073508,1386.2424930469,check pane
l 121
205,811929.2056492781,781030.5402568091,1386.2516932166,check pane
l 121
206,811929.1995724761,781030.5351760245,1386.2567929782,check pane
l 121
207,804840.3131262304,781035.1609174423,1400.5197475251,check pane
l 125
208,804840.3262388274,781035.1506896485,1400.5227479620,check pane
l 125
209,804840.3262409791,781035.1515391942,1400.5184479652,check pane
l 125
210,811526.2707110546,779805.3236748381,1381.1251953006,panel 120
211,811526.2887634158,779805.3215936334,1381.2081244403,panel 120
212,811526.2857441771,779805.3266973910,1381.2213243498,panel 120
213,812777.7123773289,775735.8186560869,1368.3737785734,panel 114
elev
214,812777.7113646633,775735.8178091550,1368.3596785337,panel 114
elev
215,812777.7184532944,775735.8237377481,1368.3695788119,panel 114
elev
216,812777.7032694004,775735.8135816177,1367.8848782253,panel 114
bc
217,812777.7063154184,775735.8195197757,1367.8913783573,panel 114
bc
218,812777.7083286949,775735.8161176562,1367.8890784177,panel 114
bc
219,811563.5084014465,777353.8920958161,1374.4162833171,panel 116
220,811563.4942605405,777353.8955274855,1374.4022828181,panel 116
221,811563.4891990763,777353.8921422332,1374.3856826226,panel 116
222,812871.1893736497,771881.5793561173,1356.4756296225,panel 113
223,812871.2630215116,771881.5214357643,1356.5399320746,panel 113
224,812871.2751417062,771881.5180111886,1356.5089325006,panel 113
225,814897.7676195300,778366.2199896420,1375.0365219570,panel 115
226,814897.7574693250,778366.2021795525,1375.0020215244,panel 115
227,814897.7524056663,778366.1979455338,1375.0078213257,panel 115
228,814897.7524368647,778366.2106847047,1375.0179213736,panel 115
229,816768.9916053873,775732.5887857650,1367.3362636137,panel 110
230,816769.1190669964,775725.3801892451,1367.1106417962,panel 110
231,816769.1120004544,775725.3836029065,1367.1134415531,panel 110
```

232,816769.1251590556,775725.3920640908,1367.1115420602,panel 110
233,815475.4333182783,774289.4480497416,1358.6771741614,panel 111
234,815475.4363265815,774289.4378515405,1358.6903742329,panel 111
235,815475.4373451084,774289.4412462473,1358.6796742822,panel 111
236,814614.9971658333,773434.7006166462,1358.7905114654,panel 112
237,814614.9981881799,773434.7057100334,1358.8019115210,panel 112
238,814614.9961629752,773434.7040161106,1358.8041114416,panel 112
239,814614.9518092570,773434.7542260506,1358.7963100210,panel 112
240,815622.9056533278,770585.3823551164,1350.7878292395,panel 107
ir
241,815622.9137610373,770585.3925283849,1350.7847295701,panel 107
ir
242,815622.9117322322,770585.3891358073,1350.7535294843,panel 107
ir
243,815622.9896112343,770584.9575381726,1351.4001307194,panel 107
elev
244,815622.8489972476,770584.8975507626,1351.3788254123,panel 107
elev
245,815622.8398413963,770584.8703945376,1351.3602249815,panel 107
elev
246,816895.5672229077,770576.5911457124,1350.5719394804,panel 106
247,816895.5936554645,770576.6615734568,1350.5881406949,panel 106
248,816895.6037563849,770576.6590034801,1350.5273410509,panel 106
249,818226.3205597252,773087.3294715246,1358.2355887044,panel 109
250,818226.3044086497,773087.3380003789,1358.2610881514,panel 109
251,818226.2993650779,773087.3422578671,1358.2433879845,panel 109
252,818908.2149801268,770570.8340257688,1351.8579321363,panel 105
253,818908.2200652603,770570.8484505387,1351.8200323732,panel 105
254,818908.2170351683,770570.8493064020,1351.8112322667,panel 105
255,820965.0203827989,770546.0298414138,1345.5921524997,panel 100
bc
256,820965.0972302170,770546.0466543477,1345.6274553415,panel 100
bc
257,820965.1074079754,770546.0788985437,1345.6695558279,panel 100
bc
258,820965.3826832301,770546.2489648613,1346.0209664104,panel 100
elev
259,820965.3765818197,770546.2319958775,1346.0712661274,panel 100
elev
260,820965.4765282667,770546.1825263407,1346.0383695619,panel 100
elev
261,820962.6901316320,770531.9769164175,1345.5632166735,panel 100
elev
262,820965.4150298877,770546.2514408735,1346.0699675897,panel 100
elev
263,819579.0548698825,769274.3258322540,1346.5643484671,panel 101

264,819579.0629422698,769274.3198706575,1346.5444487373,panel 101
265,819579.0781039610,769274.3206869797,1346.5592492888,panel 101
266,818340.8414352034,769294.7933779939,1347.4172273030,panel 104
267,818340.8464939970,769294.7959146148,1347.4067274953,panel 104
268,818340.8454796702,769294.7942184234,1347.3960274524,panel 104
269,818307.9230480848,767936.1726063965,1342.4412552766,panel 102
270,818307.9149610400,767936.1717743904,1342.4261549810,panel 102
271,818307.9250729999,767936.1743004854,1342.4146553561,panel 102
272,820785.7412106332,767867.7212170318,1340.8391470564,panel 215
273,820785.7331488002,767867.7322727947,1340.8470468053,panel 215
274,820785.7260723840,767867.7314386815,1340.8527465462,panel 215
275,820640.0270254335,765161.4865210704,1335.8076535453,panel 209
276,820640.0189609278,765161.4967270666,1335.7881532910,panel 209
277,820640.0159428030,765161.5035262567,1335.7816532067,panel 209
278,818841.6575832386,765248.5337101710,1332.5861379714,panel 210
279,818841.6578973036,765248.5279945985,1332.5885762472,panel 210
280,818841.6448059444,765248.5428170585,1332.5872027626,panel 210
281,817998.8192165806,765211.3502807997,1332.6913623392,panel 211
282,817998.8284967243,765211.3630070915,1332.6930177296,panel 211
283,817998.8111993438,765211.3590197535,1332.6856392307,panel 211
284,817320.9340025651,765232.6289573929,1330.6484021753,panel 212
285,817320.9408133761,765232.6234459556,1330.6707468659,panel 212
286,817320.9597655804,765232.6169447692,1330.6639134629,panel 212
287,817317.5256002510,765232.0973056648,1330.5380253958,ne corner
rr tie
288,817317.5173538148,765232.1036701102,1330.5387954203,ne corner
rr tie
289,817317.5224598841,765232.1117509769,1330.5347412214,ne corner
rr tie
290,818001.9308177106,759936.2884274586,1316.1798158356,panel 202
elev
291,818002.1536080244,759936.1968179254,1316.1979050109,panel 202
elev
292,818002.1335031188,759936.2057974905,1316.1713252602,panel 202
elev
293,818001.3738837260,759936.3162706611,1315.1056267598,panel 202
bc
294,818001.3574074144,759936.3180242770,1315.1048561014,panel 202
bc
295,818001.3698618917,759936.3091659397,1315.0998590660,panel 202
bc
296,818548.0479156692,759946.9375665891,1317.0680224185,panel 201
297,818548.0377516125,759946.9560713138,1317.0759398235,panel 201
298,818548.0416664470,759946.9531126292,1317.0613488730,panel 201
299,818548.0554282190,759946.9471152485,1317.0731055488,panel 201
300,820669.5806078964,759939.8258567788,1326.2076250001,panel 200e

```
lev
301,820669.6034539251,759939.8455270045,1326.2793396941,panel 200e
lev
302,820669.6145300979,759939.8232479410,1326.2863700916,panel 200e
lev
303,820668.9473537033,759939.7797737288,1325.3796038379,panel 200
304,820668.9457941093,759939.7762819121,1325.3906741768,panel 200
305,820668.9394687427,759939.7889550966,1325.4074275521,panel 200
306,820582.1615130214,762545.7995512295,1324.7921030988,panel 208
307,820582.2001807292,762545.8799602673,1324.7318067615,panel 208
308,820582.2013643425,762545.8644634010,1324.6939063360,panel 208
309,820582.2029413870,762545.8568449169,1324.6653356879,panel 208
310,818673.1705306040,762550.8602482419,1322.3447138799,panel 207
311,818673.1764305534,762550.8446315647,1322.3069391688,panel 207
312,818673.1953366424,762550.8334000697,1322.2731750683,panel 207
313,817320.8410949453,759929.5999953086,1315.4807121341,panel 203
314,817320.8370751818,759929.6155264216,1315.5061695859,panel 203
315,817320.8280124334,759929.6209001951,1315.5090182059,panel 203
316,815333.0852597813,759955.5965366041,1316.9017538829,panel 204
elev
317,815333.1781354912,759955.4979873621,1316.8088222106,panel 204
elev
318,815333.1860539240,759955.5097718043,1316.8082657543,panel 204
elev
319,815306.7564192368,765234.6954046512,1331.8599561469,panel 213
320,815306.7617946033,765234.6894023239,1331.8445329607,panel 213
321,815306.7542178573,765234.6926388012,1331.8484036952,panel 213
322,815345.6773860853,765249.1016405427,1332.5295514922,post e dit
ch
323,815345.6828772844,765249.0902335632,1332.5244809718,post e dit
ch
324,815345.6717833317,765249.0962958172,1332.5421878417,post e dit
ch
325,815377.3441597628,762573.1534166045,1324.7784774405,panel
326,815377.3395492430,762573.1478045877,1324.7837838473,panel
327,815377.3308551935,762573.1493407493,1324.7754386813,panel
328,816679.9741382716,762598.4385407472,1323.7379325153,se cor hdw
l
329,816679.9868312801,762598.4234974944,1323.7582789982,se cor hdw
l
330,816679.9793148451,762598.4246511640,1323.7550959646,se cor hdw
l
331,815384.0999811925,767926.6722893829,1341.2817723551,panel 214
332,815384.1077571323,767926.6777074593,1341.2486571055,panel 214
333,815384.0983981744,767926.6622686508,1341.2883468571,panel 214
334,815348.1951249647,767899.1718327266,1341.7669138516,post se co
```

```
r dtch
335,815348.1735161921,767899.1593561938,1341.7231840365,post se co
r dtch
336,815348.2035291789,767899.1538238123,1341.7325665753,post se co
r dtch
337,816836.2714825775,767892.7446356518,1340.9307627120,panel 103
338,816836.2746564716,767892.7426279997,1340.9388739237,panel 103
339,816836.2865312796,767892.7397873930,1340.9511920490,panel 103
```

```
100,820965.075000,770546.051800,1346.05000000,PANEL
105,818908.217400,770570.843900,1351.83000000,PANEL
106,816895.588200,770576.637200,1350.56200000,PANEL
107,815622.910400,770585.388000,1351.38000000,PANEL
110,816769.118700,775725.385300,1367.11000000,PANEL
114,812777.706000,775735.816400,1368.36800000,PANEL
121,811930.398000,781031.076900,1880.14300000,PANEL
123,808584.777800,781019.719600,1877.11700000,PANEL
125,804841.651000,781035.647300,1894.72400000,PANEL
127,807536.380100,786298.519000,1895.47500000,PANEL
130,804892.251400,786304.825900,1910.59500000,PANEL
134,801069.541200,786304.848800,1950.29000000,PANEL
135,803059.148268,786330.509906,1924.32999552,RESECT PT
136,804851.808838,786322.254800,1910.00373628,SHLDR
137,804849.673535,786305.335645,1910.97501700,EP
138,804842.252457,786277.936157,1911.24366963,EP
139,804841.761644,786265.059357,1910.03333758,SHLDR
140,803741.448779,786272.050001,1918.41842375,SHLDR
141,803741.166273,786283.849045,1919.87127408,EP
142,803741.534146,786311.698013,1919.58035725,EP
143,803740.112847,786328.975304,1917.52961010,SHLDR
144,802440.682321,786290.785978,1931.34309598,SHLDR
145,802440.787411,786305.177996,1932.29425223,EP
146,802440.780781,786332.592971,1932.16815267,EP
147,802440.587021,786349.168026,1930.05839017,SHLDR
148,801132.156881,786299.582607,1949.96501455,SHLDR
149,801131.667750,786309.715593,1950.10984220,EP
150,801132.174989,786336.347246,1950.14852068,EP
151,801131.950317,786347.653777,1949.21784863,SHLDR
152,806259.307810,786254.633749,1902.08187884,RESECT PT
153,807465.126647,786312.994524,1894.99743328,SHLDR
154,807464.385189,786298.209340,1895.76620351,EP
155,807463.841095,786270.754070,1895.97767881,EP
156,807464.474543,786258.491690,1895.41961272,SHLDR
157,806721.656819,786260.160028,1898.13822935,SHLDR
158,806722.030076,786272.994546,1899.19771668,EP
159,806720.808622,786299.670357,1898.78839088,EP
160,806720.308920,786315.656069,1897.23255314,SHLDR
161,805466.261603,786264.956511,1905.97548213,SHLDR
162,805466.138654,786275.748840,1906.68852074,EP
163,805463.930881,786302.176973,1906.39613316,EP
164,805466.213191,786317.050543,1904.94403210,SHLDR
165,810114.299806,781067.207583,1879.96668595,RESECT PT
166,811411.431391,780986.179624,1880.04426450,SHLDR
167,811410.104257,780994.458184,1880.51686944,EP
168,811408.628452,781021.801111,1879.92042293,EP
```

```
1,801270.4976920754,786153.3711966386,1455.1500000000,SET 40D HUNT
 ELL
124,806113.6472000000,779676.8038000000,1393.3800000000,AIR PANEL
127,807534.8010000000,786298.1296000000,1401.3300000000,AIR PANEL
130,804890.4791999999,786304.4369000000,1416.4900000000,AIR PANEL
134,801067.4901000001,786304.4599000000,1456.8100000000,AIR PANEL
2,801067.4623916264,786304.4660960950,1456.8055205721,BOGUS
125,804839.8752000000,781034.8737999999,1400.6400000000,BC HH HAW
SAN
200,801090.2786363128,786190.0730547550,1456.6723659011,NG
201,801263.1743187716,785105.6359753893,1453.6346543342,NG
202,801528.9019926133,782926.6552869327,1433.0448484428,NG
203,801648.7890573603,781895.2488582368,1427.2933629729,NG
204,801743.6377726870,781110.6880927664,1431.4208770992,NG
205,801841.7365154950,780260.1303820412,1433.5004216703,NG
206,801915.8918515783,779663.4543977770,1434.1908555752,NG
207,801946.0542297356,779386.2277150871,1434.4295645327,NG
208,802002.5324040222,778985.5716138894,1435.9771383736,NG
209,802054.2960107543,778512.1177815028,1438.6310146052,NG
210,802170.1630200159,779729.7594217815,1433.5781322408,PAV
211,802107.6178188593,777405.4879398402,1442.0401904824,IE
212,802103.3419291357,777173.1759731860,1442.8984225639,IE
213,802097.2468879730,776867.6676518859,1441.2708896446,IE
214,802127.9781591578,776885.9645272451,1445.5886735106,PAV
215,802076.7873329186,775912.1019753841,1442.9224128372,IE
216,802111.5522853425,775807.1591315407,1445.0312980215,PAV
217,802099.1808240972,774733.9653386808,1448.3982595543,PAV
218,802082.0411499174,773283.9547214271,1448.2687157006,PAV
219,802069.5791511746,771944.8520196094,1447.9760805126,PAV
220,802062.7675382409,771172.7535600173,1447.8379409971,PAV
221,802059.1707112917,770556.4173489000,1447.7467746914,PAV
222,802056.7469265952,769226.2168254857,1447.4180127042,PAV
223,802055.1647598250,768733.6131390039,1445.0477080015,PAV
224,802053.2469495004,767379.0862031571,1436.9420664739,PAV
225,802048.5083721508,765277.4160240931,1417.5725191672,PAV
226,802047.5687517053,764710.2241208472,1411.7533792385,PAV
227,802046.4068600477,764247.8522172859,1408.0868015170,PAV
228,802044.3643319858,763128.9588604803,1398.0533925968,PAV
229,802044.0078759601,761881.4133831661,1386.6592924782,PAV
230,802050.7390994378,761064.9214000551,1377.7538308556,PAV
231,802132.3783687110,777171.2228278900,1444.9906983875,PAV
232,802136.2104875306,777407.3519586865,1444.3348043021,PAV
233,802154.3491673905,778559.8000765749,1439.9363554160,PAV
234,802125.8803583479,778558.9634701512,1436.8806146208,IE
235,802158.1675202959,778830.3751479252,1438.2864056729,PAV
236,802127.9385608751,778824.4473606694,1435.5617508210,IE
```

```
274,784762.0328178077,809417.9389191472,1526.1665010416,NG
275,782621.3318944892,811015.7526116858,1519.4511327855,NG
276,781216.4880572786,812059.2082920442,1517.0373807879,NG
277,772626.9018305325,818508.1891725746,1517.6862287614,NG
278,770856.3859184346,819871.7580438281,1516.5847942288,NG
279,767710.6601530060,822297.0076380624,1531.6436017918,NG
280,766051.4077957735,823584.3513166939,1540.3937229866,NG
281,791542.3550218889,814904.3421257171,1491.5031424592,IE WB
282,791538.5551189401,814907.2105008864,1490.8552979480,IE WB
283,791531.2089922709,814912.6044107410,1490.7387878055,IE WB
284,791528.3762996666,814915.4724836478,1491.5583239735,IE WB
285,794641.4304404227,812381.4185923876,1487.2481220621,IE CMP
286,796959.6282694009,810501.4970831713,1482.0997746227,IE CMP
287,796966.9524943687,810495.7700039742,1481.8395344676,IE CMP
288,797160.3081804302,810342.2190788910,1484.2791614450,IE CMP
289,797153.9653903234,810347.6021492097,1484.4051423297,IE CMP
290,797148.0960201821,810353.1650221560,1484.4174767143,IE CMP
291,797141.4113105575,810358.4972680201,1483.9232164939,IE CMP
292,797173.4357818764,810392.7540844085,1483.8177760313,IE CMP
293,797167.3346952128,810397.1312742862,1483.9548031535,IE CMP
294,797161.1974834115,810402.5471056997,1483.7730886950,IE CMP
295,797154.8813798131,810407.8319002551,1484.0213715197,IE CMP
296,796997.6795366171,810533.8778975625,1482.8482347243,IE CMP
297,796990.1616294347,810540.0591362603,1482.7265248109,IE CMP
298,794670.1454463012,812417.8406655261,1487.8736272328,IE CMP
299,791550.2260177621,814935.5100593425,1491.1869653481,IE CMP
300,791547.2891289243,814938.5867645779,1491.9340699689,IE WB
301,791560.4038072173,814927.0974380774,1491.4734322456,IE WB
302,791557.0559774586,814929.8639440256,1491.2855253659,IE WB
```

AVERY

```
JB,NMSONOKAI2,DT11-05-1997,TM08:19:26
MO,AD0,UN0,SF1.000000,EC0,EO0.0000
SP,PN1,N 5000.00000,E 5000.00000,EL1375.000,--START
SP,PN16,N 815513.33570,E 786266.79850,EL1401.260,--panel
SP,PN17,N 814915.64270,E 786270.95550,EL1401.860,--panel
SP,PN68,N 815117.14570,E 794086.09250,EL1424.690,--g68
SP,PN69,N 828701.96850,E 786118.00850,EL1390.850,--nw sec 10 - DU2099
--15:50:16.50,Get base position at BASE: LA33.144981866,LN-
111.385095194,HT1307.0079
--Set BASE : record intrvl: OFF, elev cutoff: 12 deg, antenna ht: 4.890
--08:46:38.74,Set Base receiver position
BP,PN1,LA33.144981866,LN-111.385095194,HT1307.0079
--15:52:37.50,Get base position at BASE: LA33.144934484,LN-
111.385052984,HT1589.1667
--Set BASE : record intrvl: OFF, elev cutoff: 12 deg, antenna ht: 4.890
--08:49:04.79,Set Base receiver position
BP,PN1,LA33.144934484,LN-111.385052984,HT1589.1667
--Set BASE : record intrvl: OFF, elev cutoff: 12 deg, antenna ht: 4.890
--08:49:17.59,Set Base receiver position
BP,PN1,LA33.144934484,LN-111.385052984,HT1589.1667
--Set ROVER: record intrvl: OFF, elev cutoff: 12 deg, antenna ht: 6.670
--Send Base position to Rover:LA33.144934484,LN-
111.385052984,HT1589.1667
EP,TM16:17:22.00,LA33.142957568,LN-
111.380464292,HT1602.5755,RH0.0033,RV0.0066,DH1.00,DV1.60
--16:17:22.00,Add cntrl pt: 16,LA= 33.142957568,LN= -111.380464292,HT=
1602.5755,--H,V
EP,TM16:21:24.00,LA33.142366298,LN-
111.380461340,HT1603.1660,RH0.0066,RV0.0098,DH1.00,DV1.60
--16:21:24.00,Add cntrl pt: 17,LA= 33.142366298,LN= -111.380461340,HT=
1603.1660,--H,V
EP,TM16:30:44.00,LA33.164005552,LN-
111.380598902,HT1592.3753,RH0.0066,RV0.0098,DH0.90,DV1.50
--16:30:44.00,Add cntrl pt: 69,LA= 33.164005552,LN= -111.380598902,HT=
1592.3753,--H,V
EP,TM16:44:8.00,LA33.142543886,LN-
111.363258912,HT1625.9383,RH0.0066,RV0.0098,DH0.90,DV1.50
--16:44:8.00,Add cntrl pt: 68,LA= 33.142543886,LN= -111.363258912,HT=
1625.9383,--H,V
--09:40:34.29,Solve for local Horizontal transformation
HC,PN16,LA33.142957568,LN-111.380464292,HT1602.5755,--H,V
HC,PN17,LA33.142366298,LN-111.380461340,HT1603.1660,--H,V
HC,PN69,LA33.164005552,LN-111.380598902,HT1592.3753,--H,V
HC,PN68,LA33.142543886,LN-111.363258912,HT1625.9383,--H,V
--09:40:36.98,Solve for local Vertical transformation
VC,PN16,LA33.142957568,LN-111.380464292,HT1602.5755,--H,V
VC,PN17,LA33.142366298,LN-111.380461340,HT1603.1660,--H,V
VC,PN69,LA33.164005552,LN-111.380598902,HT1592.3753,--H,V
VC,PN68,LA33.142543886,LN-111.363258912,HT1625.9383,--H,V
LH,PN1,Ha3.280845051,Hb-
0.008200334,Hc455099.817381114,Hd488597.239757106,SC1.000004695,RT-
0.083555
LV,PN1,Va0.000025414,Vb-0.000051980,Vc-198.720716428,Ba33.144934484,Bo-
111.385052984,Bh1589.1667
EP,TM16:46:33.00,LA33.142543880,LN-
111.363258914,HT1625.9600,RH0.0162,RV0.0263,DH0.91,DV1.48
GS,PN134,N 815116.86739,E 794086.51661,EL1424.712,--check g68
--09:46:14.89,Solve for local Horizontal transformation
HC,PN16,LA33.142957568,LN-111.380464292,HT1602.5755,--H,V
HC,PN17,LA33.142366298,LN-111.380461340,HT1603.1660,--H,V
```

```
HC,PN69,LA33.164005552,LN-111.380598902,HT1592.3753,--H,V
HC,PN68,LA33.142543886,LN-111.363258912,HT1625.9383,--H,V
--09:46:17.74,Solve for local Vertical transformation
VC,PN16,LA33.142957568,LN-111.380464292,HT1602.5755,--H,V
VC,PN17,LA33.142366298,LN-111.380461340,HT1603.1660,--H,V
VC,PN69,LA33.164005552,LN-111.380598902,HT1592.3753,--H,V
VC,PN68,LA33.142543886,LN-111.363258912,HT1625.9383,--H,V
LH,PN1,Ha3.280845051,Hb-
0.008200334,Hc455099.817381114,Hd488597.239757106,SC1.000004695,RT-
0.083555
LV,PN1,Va0.000025414,Vb-0.000051980,Vc-198.720716428,Ba33.144934484,Bo-
111.385052984,Bh1589.1667
EP,TM16:51:48.00,LA33.142543856,LN-
111.363258888,HT1625.9510,RH0.0153,RV0.0255,DH1.18,DV2.02
GS,PN135,N 815116.84246,E 794086.53879,EL1424.703,--check g68
--09:50:07.88,Solve for local Horizontal transformation
HC,PN16,LA33.142957568,LN-111.380464292,HT1602.5755,--H,V
HC,PN17,LA33.142366298,LN-111.380461340,HT1603.1660,--H,V
HC,PN69,LA33.164005552,LN-111.380598902,HT1592.3753,--H,V
--09:50:10.68,Solve for local Vertical transformation
VC,PN16,LA33.142957568,LN-111.380464292,HT1602.5755,--H,V
VC,PN17,LA33.142366298,LN-111.380461340,HT1603.1660,--H,V
VC,PN69,LA33.164005552,LN-111.380598902,HT1592.3753,--H,V
VC,PN68,LA33.142543886,LN-111.363258912,HT1625.9383,--V
LH,PN1,Ha3.280969428,Hb-
0.008195543,Hc455086.893054759,Hd488585.112492068,SC1.000042602,RT-
0.083523
LV,PN1,Va0.000025414,Vb-0.000051980,Vc-198.720716428,Ba33.144934484,Bo-
111.385052984,Bh1589.1667
--09:51:03.35,Solve for local Horizontal transformation
HC,PN16,LA33.142957568,LN-111.380464292,HT1602.5755,--H,V
HC,PN17,LA33.142366298,LN-111.380461340,HT1603.1660,--H,V
HC,PN69,LA33.164005552,LN-111.380598902,HT1592.3753,--H,V
HC,PN68,LA33.142543886,LN-111.363258912,HT1625.9383,--H,V
--09:51:05.99,Solve for local Vertical transformation
VC,PN16,LA33.142957568,LN-111.380464292,HT1602.5755,--H,V
VC,PN17,LA33.142366298,LN-111.380461340,HT1603.1660,--H,V
VC,PN69,LA33.164005552,LN-111.380598902,HT1592.3753,--H,V
VC,PN68,LA33.142543886,LN-111.363258912,HT1625.9383,--H,V
LH,PN1,Ha3.280845051,Hb-
0.008200334,Hc455099.817381114,Hd488597.239757106,SC1.000004695,RT-
0.083555
LV,PN1,Va0.000025414,Vb-0.000051980,Vc-198.720716428,Ba33.144934484,Bo-
111.385052984,Bh1589.1667
--10:06:03.36,Solve for local Horizontal transformation
HC,PN16,LA33.142957568,LN-111.380464292,HT1602.5755,--H,V
HC,PN17,LA33.142366298,LN-111.380461340,HT1603.1660,--H,V
HC,PN68,LA33.142543886,LN-111.363258912,HT1625.9383,--H,V
--10:06:05.78,Solve for local Vertical transformation
VC,PN16,LA33.142957568,LN-111.380464292,HT1602.5755,--H,V
VC,PN17,LA33.142366298,LN-111.380461340,HT1603.1660,--H,V
VC,PN68,LA33.142543886,LN-111.363258912,HT1625.9383,--H,V
LH,PN1,Ha3.280608558,Hb-
0.008421708,Hc455145.864009431,Hd488598.061302192,SC0.999932783,RT-
0.084950
LV,PN1,Va0.000025417,Vb-0.000051762,Vc-198.742675087,Ba33.144934484,Bo-
111.385052984,Bh1589.1667
-- *** Coordinate File converted into nonseq. file ***
EP,TM17:19:43.00,LA33.164007196,LN-
111.380597654,HT1592.8412,RH0.0098,RV0.0131,DH1.00,DV1.70
```

```
--17:19:43.00,Add cntrl pt: 69,LA= 33.164007196,LN= -111.380597654,HT=
1592.8412,--H,V
--10:16:40.55,Solve for local Horizontal transformation
HC,PN16,LA33.142957568,LN-111.380464292,HT1602.5755,--H,V
HC,PN17,LA33.142366298,LN-111.380461340,HT1603.1660,--H,V
HC,PN68,LA33.142543886,LN-111.363258912,HT1625.9383,--H,V
HC,PN69,LA33.164007196,LN-111.380597654,HT1592.8412,--H
--10:16:43.79,Solve for local Vertical transformation
VC,PN16,LA33.142957568,LN-111.380464292,HT1602.5755,--H,V
VC,PN17,LA33.142366298,LN-111.380461340,HT1603.1660,--H,V
VC,PN68,LA33.142543886,LN-111.363258912,HT1625.9383,--H,V
LH,PN1,Ha3.280581982,Hb-
0.008452173,Hc455151.591681602,Hd488597.583539994,SC0.999924707,RT-
0.085142
LV,PN1,Va0.000025417,Vb-0.000051762,Vc-198.742675087,Ba33.144934484,Bo-
111.385052984,Bh1589.1667
--10:17:35.09,Solve for local Horizontal transformation
HC,PN16,LA33.142957568,LN-111.380464292,HT1602.5755,--H,V
HC,PN17,LA33.142366298,LN-111.380461340,HT1603.1660,--H,V
HC,PN68,LA33.142543886,LN-111.363258912,HT1625.9383,--H,V
HC,PN69,LA33.164007196,LN-111.380597654,HT1592.8412,--H,V
--10:17:37.68,Solve for local Vertical transformation
VC,PN16,LA33.142957568,LN-111.380464292,HT1602.5755,--H,V
VC,PN17,LA33.142366298,LN-111.380461340,HT1603.1660,--H,V
VC,PN68,LA33.142543886,LN-111.363258912,HT1625.9383,--H,V
VC,PN69,LA33.164007196,LN-111.380597654,HT1592.8412,--H,V
LH,PN1,Ha3.280581982,Hb-
0.008452173,Hc455151.591681602,Hd488597.583539994,SC0.999924707,RT-
0.085142
LV,PN1,Va0.000023812,Vb-0.000165136,Vc-187.322504662,Ba33.144934484,Bo-
111.385052984,Bh1589.1667
SP,PN70,N 823421.00000,E 786118.00850,EL1394.550,--ell qc
--10:37:40.49,Solve for local Horizontal transformation
HC,PN16,LA33.142957568,LN-111.380464292,HT1602.5755,--H,V
HC,PN17,LA33.142366298,LN-111.380461340,HT1603.1660,--H,V
HC,PN68,LA33.142543886,LN-111.363258912,HT1625.9383,--H,V
HC,PN69,LA33.164007196,LN-111.380597654,HT1592.8412,--H
--10:37:43.18,Solve for local Vertical transformation
VC,PN16,LA33.142957568,LN-111.380464292,HT1602.5755,--H,V
VC,PN17,LA33.142366298,LN-111.380461340,HT1603.1660,--H,V
VC,PN68,LA33.142543886,LN-111.363258912,HT1625.9383,--H,V
LH,PN1,Ha3.280581982,Hb-
0.008452173,Hc455151.591681602,Hd488597.583539994,SC0.999924707,RT-
0.085142
LV,PN1,Va0.000025417,Vb-0.000051762,Vc-198.742675087,Ba33.144934484,Bo-
111.385052984,Bh1589.1667
EP,TM17:43:47.00,LA33.154769886,LN-
111.380537636,HT1595.6135,RH0.0098,RV0.0164,DH1.10,DV1.70
--17:43:47.00,Add cntrl pt: 70,LA= 33.154769886,LN= -111.380537636,HT=
1595.6135,--V
--10:40:27.35,Solve for local Horizontal transformation
HC,PN16,LA33.142957568,LN-111.380464292,HT1602.5755,--H,V
HC,PN17,LA33.142366298,LN-111.380461340,HT1603.1660,--H,V
HC,PN68,LA33.142543886,LN-111.363258912,HT1625.9383,--H,V
HC,PN69,LA33.164007196,LN-111.380597654,HT1592.8412,--H
--10:40:29.99,Solve for local Vertical transformation
VC,PN16,LA33.142957568,LN-111.380464292,HT1602.5755,--H,V
VC,PN17,LA33.142366298,LN-111.380461340,HT1603.1660,--H,V
VC,PN68,LA33.142543886,LN-111.363258912,HT1625.9383,--H,V
VC,PN70,LA33.154769886,LN-111.380537636,HT1595.6135,--V
```

```
LH,PN1,Ha3.280581982,Hb-
0.008452173,Hc455151.591681602,Hd488597.583539994,SC0.999924707,RT-
0.085142
LV,PN1,Va0.000027463,Vb0.000098586,Vc-213.878772453,Ba33.144934484,Bo-
111.385052984,Bh1589.1667
EP,TM17:52:22.00,LA33.140299057,LN-
111.380456103,HT1601.9893,RH0.0155,RV0.0255,DH1.13,DV1.66
GS,PN134,N 812826.35838,E 786281.03265,EL1400.607,--rim ell ch
EP,TM17:58:57.00,LA33.131063639,LN-
111.380452725,HT1602.6376,RH0.0143,RV0.0197,DH1.16,DV1.61
GS,PN135,N 807535.04620,E 786298.17856,EL1401.097,--panel 127
EP,TM17:59:26.00,LA33.131063641,LN-
111.380452710,HT1602.6129,RH0.0136,RV0.0187,DH1.17,DV1.61
GS,PN136,N 807535.04863,E 786298.19122,EL1401.072,--panel 127
EP,TM18: 0:13.00,LA33.131063639,LN-
111.380452717,HT1602.6072,RH0.0151,RV0.0205,DH1.17,DV1.60
GS,PN137,N 807535.04674,E 786298.18549,EL1401.066,--panel 127
EP,TM18: 0:51.00,LA33.131063642,LN-
111.380452718,HT1602.5874,RH0.0181,RV0.0245,DH1.17,DV1.60
GS,PN138,N 807535.04911,E 786298.18445,EL1401.046,--panel 127
EP,TM18: 9:13.00,LA33.131063692,LN-
111.380453471,HT1603.1926,RH0.0111,RV0.0202,DH1.42,DV2.51
GS,PN139,N 807535.09838,E 786297.54447,EL1401.652,--panel 127 elev
EP,TM18: 9:48.00,LA33.131063691,LN-
111.380453470,HT1603.1431,RH0.0142,RV0.0249,DH1.42,DV2.49
GS,PN140,N 807535.09747,E 786297.54557,EL1401.602,--panel 127 elev
EP,TM18:10:26.00,LA33.131063701,LN-
111.380453470,HT1603.1396,RH0.0137,RV0.0238,DH1.42,DV2.47
GS,PN141,N 807535.10708,E 786297.54549,EL1401.599,--panel 127 elev
EP,TM18:15:26.00,LA33.124447262,LN-
111.380454239,HT1618.3967,RH0.0108,RV0.0356,DH1.71,DV5.82
GS,PN142,N 804890.73496,E 786304.02633,EL1416.776,--panel 130 elev
EP,TM18:16:22.00,LA33.124447247,LN-
111.380454229,HT1618.3781,RH0.0140,RV0.0472,DH1.72,DV5.81
GS,PN143,N 804890.72054,E 786304.03507,EL1416.758,--panel 130 elev
EP,TM18:17:18.00,LA33.124447245,LN-
111.380454240,HT1618.3477,RH0.0143,RV0.0476,DH1.74,DV5.80
GS,PN144,N 804890.71799,E 786304.02604,EL1416.727,--panel 130 elev
EP,TM18:18:35.00,LA33.124447373,LN-
111.380453674,HT1617.7886,RH0.0157,RV0.0515,DH1.76,DV5.78
GS,PN145,N 804890.84935,E 786304.50602,EL1416.168,--panel 130
EP,TM18:19:22.00,LA33.124447375,LN-
111.380453686,HT1617.8486,RH0.0160,RV0.0519,DH1.78,DV5.76
GS,PN146,N 804890.85135,E 786304.49573,EL1416.228,--panel 130
EP,TM18:20:1.00,LA33.124447360,LN-
111.380453689,HT1617.8563,RH0.0180,RV0.0579,DH1.79,DV5.74
GS,PN147,N 804890.83586,E 786304.49317,EL1416.236,--panel 130
EP,TM18:31:46.00,LA33.124410808,LN-
111.374558842,HT1623.4197,RH0.0186,RV0.0251,DH1.91,DV2.58
GS,PN148,N 804858.27671,E 787914.39235,EL1421.812,--panel 132
EP,TM18:32:15.00,LA33.124410819,LN-
111.374558843,HT1623.4001,RH0.0257,RV0.0347,DH1.92,DV2.59
GS,PN149,N 804858.28806,E 787914.39200,EL1421.792,--panel 132
EP,TM18:34:17.00,LA33.124410696,LN-
111.374558922,HT1623.3605,RH0.0188,RV0.0253,DH1.95,DV2.64
GS,PN150,N 804858.16368,E 787914.32483,EL1421.753,--panel 132
EP,TM18:45:4.00,LA33.121854721,LN-
111.374767513,HT1646.4768,RH0.0146,RV0.0155,DH1.83,DV1.73
GS,PN151,N 802274.42062,E 787744.19788,EL1444.790,--panel 133
EP,TM18:45:44.00,LA33.121854747,LN-
```

```
111.374767500,HT1646.4646,RH0.0195,RV0.0187,DH1.83,DV1.73
GS,PN152,N 802274.44701,E 787744.20891,EL1444.777,--panel 133
EP,TM18:46:32.00,LA33.121854741,LN-
111.374767507,HT1646.4283,RH0.0194,RV0.0184,DH1.82,DV1.74
GS,PN153,N 802274.44140,E 787744.20263,EL1444.741,--panel 133
EP,TM19: 4:26.00,LA33.123174234,LN-
111.374837742,HT1631.6662,RH0.0178,RV0.0194,DH1.60,DV1.76
GS,PN154,N 803607.85407,E 787680.87366,EL1430.019,--panel 131
EP,TM19: 5:4.00,LA33.123174264,LN-
111.374837737,HT1631.6606,RH0.0177,RV0.0195,DH1.59,DV1.76
GS,PN155,N 803607.88359,E 787680.87762,EL1430.013,--panel 131
EP,TM19: 5:45.00,LA33.123174265,LN-
111.374837744,HT1631.6585,RH0.0177,RV0.0195,DH1.58,DV1.75
GS,PN156,N 803607.88472,E 787680.87232,EL1430.011,--panel 131
EP,TM19:23:50.00,LA33.120664972,LN-
111.380465762,HT1658.2250,RH0.0091,RV0.0124,DH1.03,DV1.53
GS,PN157,N 801068.04889,E 786304.54974,EL1456.490,--panel 134
EP,TM19:24:55.00,LA33.120664939,LN-
111.380465795,HT1658.1994,RH0.0211,RV0.0308,DH1.03,DV1.55
GS,PN158,N 801068.01525,E 786304.52176,EL1456.464,--panel 134
EP,TM19:25:59.00,LA33.120664946,LN-
111.380465792,HT1658.1984,RH0.0189,RV0.0282,DH1.03,DV1.56
GS,PN159,N 801068.02250,E 786304.52387,EL1456.463,--panel 134
EP,TM19:49:54.00,LA33.144920578,LN-
111.385081757,HT1585.5843,RH0.0068,RV0.0124,DH1.28,DV2.44
GS,PN160,N 817486.88182,E 782340.17349,EL1384.310,--panel 129
--Set ROVER: record intrvl: OFF, elev cutoff: 12 deg, antenna ht: 6.670
--Send Base position to Rover:LA33.144934484,LN-
111.385052984,HT1589.1667
--Set BASE : record intrvl: OFF, elev cutoff: 12 deg, antenna ht: 4.890
--12:51:16.37,Set Base receiver position
BP,PN1,LA33.144934484,LN-111.385052984,HT1589.1667
--Set ROVER: record intrvl: OFF, elev cutoff: 12 deg, antenna ht: 6.670
--Send Base position to Rover:LA33.144934484,LN-
111.385052984,HT1589.1667
EP,TM20:11:21.00,LA33.123208217,LN-
111.381905753,HT1622.6264,RH0.0106,RV0.0195,DH1.03,DV1.70
GS,PN160,N 803635.16142,E 785074.19988,EL1420.958,--panel 134
EP,TM20:12:2.00,LA33.123208222,LN-
111.381905763,HT1622.6431,RH0.0109,RV0.0195,DH1.02,DV1.71
GS,PN161,N 803635.16577,E 785074.19204,EL1420.975,--panel 134
EP,TM20:12:37.00,LA33.123208207,LN-
111.381905752,HT1622.6753,RH0.0117,RV0.0195,DH1.02,DV1.71
GS,PN162,N 803635.15051,E 785074.20069,EL1421.007,--panel 134
SP,PN162,N 803635.15051,E 785074.20069,EL1421.007,--panel 129
SP,PN161,N 803635.16577,E 785074.19204,EL1420.975,--panel 129
SP,PN160,N 803635.16142,E 785074.19988,EL1420.958,--panel 129
EP,TM20:22:53.00,LA33.123136103,LN-
111.384290698,HT1613.2892,RH0.0106,RV0.0192,DH1.02,DV1.80
GS,PN163,N 803556.95230,E 783048.14219,EL1411.602,--panel 128
EP,TM20:23:29.00,LA33.123136111,LN-
111.384290688,HT1613.2677,RH0.0111,RV0.0195,DH1.02,DV1.81
GS,PN164,N 803556.96013,E 783048.15009,EL1411.580,--panel 128
EP,TM20:24:4.00,LA33.123136106,LN-
111.384290702,HT1613.2782,RH0.0111,RV0.0196,DH1.02,DV1.81
GS,PN165,N 803556.95506,E 783048.13862,EL1411.591,--panel 128
--Set ROVER: record intrvl: OFF, elev cutoff: 12 deg, antenna ht: 6.670
--Send Base position to Rover:LA33.144934484,LN-
111.385052984,HT1589.1667
EP,TM20:35:41.00,LA33.125801698,LN-
```

```
111.383514899,HT1597.7727,RH0.0109,RV0.0191,DH1.03,DV1.82
GS,PN166,N 806252.71948,E 783700.21135,EL1396.172,--panel 126
EP,TM20:36:19.00,LA33.125801689,LN-
111.383514901,HT1597.7890,RH0.0111,RV0.0194,DH1.03,DV1.82
GS,PN167,N 806252.71041,E 783700.20893,EL1396.188,--panel 126
EP,TM20:36:53.00,LA33.125801697,LN-
111.383514905,HT1597.8046,RH0.0112,RV0.0195,DH1.03,DV1.81
GS,PN168,N 806252.71856,E 783700.20558,EL1396.204,--panel 126
EP,TM20:44:3.00,LA33.124410922,LN-
111.390656162,HT1602.2383,RH0.0097,RV0.0221,DH1.23,DV3.04
GS,PN169,N 804840.22415,E 781035.17565,EL1400.573,--panel 125 cp
EP,TM20:44:30.00,LA33.124410931,LN-
111.390656168,HT1602.2346,RH0.0155,RV0.0381,DH1.23,DV3.03
GS,PN170,N 804840.23299,E 781035.17004,EL1400.569,--panel 125 cp
EP,TM20:44:55.00,LA33.124410930,LN-
111.390656160,HT1602.2481,RH0.0173,RV0.0425,DH1.23,DV3.02
GS,PN171,N 804840.23139,E 781035.17750,EL1400.582,--panel 125 cp
EP,TM20:45:57.00,LA33.124411300,LN-
111.390656090,HT1602.5351,RH0.0114,RV0.0276,DH1.23,DV3.00
GS,PN172,N 804840.60639,E 781035.23585,EL1400.870,--panel 125 elev
EP,TM20:46:40.00,LA33.124411290,LN-
111.390656089,HT1602.5295,RH0.0115,RV0.0279,DH1.22,DV2.98
GS,PN173,N 804840.59600,E 781035.23689,EL1400.864,--panel 125 elev
EP,TM20:47:31.00,LA33.124411296,LN-
111.390656087,HT1602.5055,RH0.0111,RV0.0266,DH1.22,DV2.96
GS,PN174,N 804840.60214,E 781035.23818,EL1400.840,--panel 125 elev
EP,TM20:55:8.00,LA33.125674546,LN-
111.392250904,HT1594.9459,RH0.0089,RV0.0195,DH1.20,DV2.71
GS,PN175,N 806113.93311,E 779677.15239,EL1393.307,--panel 124
EP,TM20:56:10.00,LA33.125674554,LN-
111.392250890,HT1594.9398,RH0.0090,RV0.0196,DH1.20,DV2.67
GS,PN176,N 806113.94077,E 779677.16439,EL1393.301,--panel 124
EP,TM20:57:14.00,LA33.125674560,LN-
111.392250882,HT1594.9220,RH0.0092,RV0.0198,DH1.20,DV2.63
GS,PN177,N 806113.94664,E 779677.17070,EL1393.283,--panel 124
EP,TM21: 4:26.00,LA33.132114640,LN-
111.390663749,HT1584.7882,RH0.0178,RV0.0309,DH1.12,DV1.95
GS,PN178,N 808583.46646,E 781019.24469,EL1383.235,--panel 123
EP,TM21: 5:13.00,LA33.132114626,LN-
111.390663772,HT1584.7901,RH0.0131,RV0.0226,DH1.12,DV1.94
GS,PN179,N 808583.45245,E 781019.22574,EL1383.237,--panel 123
EP,TM21: 5:45.00,LA33.132114635,LN-
111.390663757,HT1584.7656,RH0.0114,RV0.0195,DH1.12,DV1.93
GS,PN180,N 808583.46166,E 781019.23855,EL1383.212,--panel 123
EP,TM21:13:57.00,LA33.133642358,LN-
111.400874127,HT1574.8404,RH0.0118,RV0.0189,DH1.09,DV1.78
GS,PN181,N 810114.56323,E 775740.06514,EL1373.289,--panel 117
EP,TM21:14:25.00,LA33.133642368,LN-
111.400874139,HT1574.8190,RH0.0120,RV0.0195,DH1.09,DV1.77
GS,PN182,N 810114.57313,E 775740.05534,EL1373.268,--panel 117
EP,TM21:14:55.00,LA33.133642367,LN-
111.400874162,HT1574.8550,RH0.0119,RV0.0192,DH1.09,DV1.76
GS,PN183,N 810114.57265,E 775740.03546,EL1373.304,--panel 117
EP,TM21:27:54.00,LA33.133218125,LN-
111.393068826,HT1587.4415,RH0.0134,RV0.0195,DH1.06,DV1.55
GS,PN184,N 809693.62172,E 778973.45312,EL1385.905,--panel 119
EP,TM21:28:20.00,LA33.133218122,LN-
111.393068825,HT1587.4328,RH0.0127,RV0.0184,DH1.06,DV1.55
GS,PN185,N 809693.61871,E 778973.45363,EL1385.896,--panel 119
EP,TM21:28:44.00,LA33.133218126,LN-
```

111.393068813,HT1587.4537,RH0.0136,RV0.0198,DH1.06,DV1.54
GS,PN186,N 809693.62295,E 778973.46369,EL1385.917,--panel 119
EP,TM21:35:29.00,LA33.133516309,LN-
111.393459064,HT1581.8135,RH0.0233,RV0.0259,DH3.33,DV3.71
GS,PN187,N 809994.17301,E 778641.22840,EL1380.283,--s side rr tie
EP,TM21:36:19.00,LA33.133516291,LN-
111.393459072,HT1581.7870,RH0.0250,RV0.0278,DH3.42,DV3.81
GS,PN188,N 809994.15452,E 778641.22184,EL1380.256,--s side rr tie
EP,TM21:37:5.00,LA33.133516292,LN-
111.393459072,HT1581.7895,RH0.0269,RV0.0298,DH3.51,DV3.90
GS,PN189,N 809994.15597,E 778641.22131,EL1380.259,--s side rr tie
EP,TM21:51:37.00,LA33.131738857,LN-
111.395557934,HT1582.2962,RH0.0427,RV0.0468,DH1.40,DV1.53
GS,PN190,N 808193.40547,E 776862.70188,EL1380.697,--panel 118
EP,TM21:52:10.00,LA33.131738929,LN-
111.395557888,HT1582.2981,RH0.0207,RV0.0227,DH1.40,DV1.53
GS,PN191,N 808193.47866,E 776862.74088,EL1380.699,--panel 118
EP,TM21:52:34.00,LA33.131738922,LN-
111.395557891,HT1582.3015,RH0.0175,RV0.0192,DH1.40,DV1.54
GS,PN192,N 808193.47185,E 776862.73871,EL1380.702,--panel 118
EP,TM21:52:58.00,LA33.131738893,LN-
111.395557899,HT1582.2914,RH0.0175,RV0.0192,DH1.40,DV1.54
GS,PN193,N 808193.44214,E 776862.73154,EL1380.692,--panel 118
EP,TM22: 6:30.00,LA33.135424941,LN-
111.390640422,HT1587.6911,RH0.0140,RV0.0192,DH1.54,DV2.13
GS,PN194,N 811929.16514,E 781030.58097,EL1386.239,--panel 121
EP,TM22: 7:2.00,LA33.135424947,LN-
111.390640415,HT1587.6836,RH0.0140,RV0.0193,DH1.54,DV2.13
GS,PN195,N 811929.17093,E 781030.58695,EL1386.231,--panel 121
EP,TM22: 7:33.00,LA33.135424955,LN-
111.390640418,HT1587.6829,RH0.0139,RV0.0193,DH1.53,DV2.14
GS,PN196,N 811929.17986,E 781030.58447,EL1386.230,--panel 121
EP,TM22: 8:6.00,LA33.135424951,LN-
111.390640415,HT1587.6858,RH0.0139,RV0.0195,DH1.53,DV2.15
GS,PN197,N 811929.17579,E 781030.58744,EL1386.233,--panel 121
EP,TM22:23:14.00,LA33.133255469,LN-
111.384003738,HT1594.2889,RH0.0117,RV0.0197,DH1.39,DV2.36
GS,PN198,N 809742.28133,E 783275.83740,EL1392.789,--panel 122
EP,TM22:24:5.00,LA33.133255472,LN-
111.384003740,HT1594.3156,RH0.0114,RV0.0194,DH1.38,DV2.38
GS,PN199,N 809742.28395,E 783275.83569,EL1392.816,--panel 122
EP,TM22:24:50.00,LA33.133255469,LN-
111.384003737,HT1594.3258,RH0.0112,RV0.0192,DH1.37,DV2.39
GS,PN200,N 809742.28118,E 783275.83833,EL1392.826,--panel 122
EP,TM22:26:1.00,LA33.133241061,LN-
111.383995862,HT1595.1292,RH0.0159,RV0.0280,DH1.36,DV2.41
GS,PN201,N 809727.73626,E 783282.56588,EL1393.629,--monitor well
EP,TM22:26:24.00,LA33.133241045,LN-
111.383995868,HT1595.1361,RH0.0158,RV0.0281,DH1.36,DV2.42
GS,PN202,N 809727.72048,E 783282.56005,EL1393.636,--monitor well
EP,TM22:26:48.00,LA33.133241052,LN-
111.383995858,HT1595.1404,RH0.0153,RV0.0274,DH1.35,DV2.43
GS,PN203,N 809727.72815,E 783282.56872,EL1393.640,--monitor well
Recompute coordinates with the latest localization coefficients

```
JB,NMSONOKAI3,DT11-06-1997,TM08:40:59
MO,AD0,UN0,SF1.000000,EC0,EO0.0000
SP,PN1,N 5000.00000,E 5000.00000,EL1375.000,--START
--15:47:34.50,Get base position at BASE: LA33.144917606,LN-
111.385024490,HT1095.2297
--Set BASE : record intrvl: OFF, elev cutoff: 12 deg, antenna ht: 4.910
--08:43:56.49,Set Base receiver position
BP,PN1,LA33.144917606,LN-111.385024490,HT1095.2297
--Set BASE : record intrvl: OFF, elev cutoff: 12 deg, antenna ht: 4.910
--08:45:44.75,Set Base receiver position
BP,PN1,LA33.144917606,LN-111.385024490,HT1095.2297
SP,PN16,N 815513.33570,E 786266.79850,EL1401.260,--panel
SP,PN17,N 814915.64270,E 786270.95550,EL1401.860,--panel
SP,PN68,N 815117.14570,E 794086.09250,EL1424.690,--g68
SP,PN69,N 828701.96850,E 786118.00850,EL1390.850,--nw sec 10
SP,PN70,N 823421.00000,E 786118.00000,EL1394.550,--ell qc
--Set ROVER: record intrvl: OFF, elev cutoff: 12 deg, antenna ht: 6.670
--Send Base position to Rover:LA33.144917606,LN-
111.385024490,HT1095.2297
EP,TM16:23:35.00,LA33.142939640,LN-
111.380436254,HT1108.6417,RH0.0066,RV0.0131,DH0.90,DV1.50
--16:23:35.00,Add cntrl pt: 16,LA= 33.142939640,LN= -111.380436254,HT=
1108.6417,--H,V
EP,TM16:29:3.00,LA33.142348256,LN-
111.380433218,HT1109.2881,RH0.0066,RV0.0098,DH0.90,DV1.50
--16:29:3.00,Add cntrl pt: 17,LA= 33.142348256,LN= -111.380433218,HT=
1109.2881,--H,V
EP,TM16:37:17.00,LA33.154752126,LN-
111.380509568,HT1101.6601,RH0.0066,RV0.0098,DH0.90,DV1.50
--16:37:17.00,Add cntrl pt: 70,LA= 33.154752126,LN= -111.380509568,HT=
1101.6601,--V
EP,TM16:43:26.00,LA33.163989586,LN-
111.380569634,HT1098.8878,RH0.0098,RV0.0164,DH0.90,DV1.50
--16:43:26.00,Add cntrl pt: 69,LA= 33.163989586,LN= -111.380569634,HT=
1098.8878,--H
EP,TM16:54:29.00,LA33.142525910,LN-
111.363230610,HT1132.0702,RH0.0098,RV0.0197,DH1.30,DV2.20
--16:54:29.00,Add cntrl pt: 68,LA= 33.142525910,LN= -111.363230610,HT=
1132.0702,--H,V
--09:51:18.95,Solve for local Horizontal transformation
HC,PN16,LA33.142939640,LN-111.380436254,HT1108.6417,--H,V
HC,PN17,LA33.142348256,LN-111.380433218,HT1109.2881,--H,V
HC,PN69,LA33.163989586,LN-111.380569634,HT1098.8878,--H
HC,PN68,LA33.142525910,LN-111.363230610,HT1132.0702,--H,V
--09:51:22.08,Solve for local Vertical transformation
VC,PN16,LA33.142939640,LN-111.380436254,HT1108.6417,--H,V
VC,PN17,LA33.142348256,LN-111.380433218,HT1109.2881,--H,V
VC,PN70,LA33.154752126,LN-111.380509568,HT1101.6601,--V
VC,PN68,LA33.142525910,LN-111.363230610,HT1132.0702,--H,V
LH,PN1,Ha3.280491151,Hb-
0.008443273,Hc455160.254428665,Hd488608.624020559,SC0.999897015,RT-
0.085088
LV,PN1,Va0.000012333,Vb0.000118651,Vc279.564734314,Ba33.144917606,Bo-
111.385024490,Bh1095.2297
EP,TM17:15:30.00,LA33.135406885,LN-
111.390612531,HT1093.7859,RH0.0115,RV0.0196,DH0.97,DV1.68
GS,PN204,N 811929.19882,E 781030.56285,EL1386.242,--check panel 121
EP,TM17:16:9.00,LA33.135406892,LN-
111.390612558,HT1093.7951,RH0.0110,RV0.0190,DH0.97,DV1.68
GS,PN205,N 811929.20526,E 781030.53996,EL1386.252,--check panel 121
```

EP,TM17:16:54.00,LA33.135406886,LN-
111.390612564,HT1093.8002,RH0.0116,RV0.0199,DH0.97,DV1.68
GS,PN206,N 811929.19988,E 781030.53537,EL1386.257,--check panel 121
EP,TM17:22:58.00,LA33.124392727,LN-
111.390628245,HT1108.3196,RH0.0114,RV0.0195,DH0.97,DV1.67
GS,PN207,N 804840.31279,E 781035.16086,EL1400.520,--check panel 125
EP,TM17:23:29.00,LA33.124392740,LN-
111.390628257,HT1108.3226,RH0.0112,RV0.0192,DH0.97,DV1.67
GS,PN208,N 804840.32608,E 781035.15035,EL1400.523,--check panel 125
EP,TM17:24:4.00,LA33.124392740,LN-
111.390628256,HT1108.3183,RH0.0112,RV0.0192,DH0.97,DV1.67
GS,PN209,N 804840.32672,E 781035.15133,EL1400.518,--check panel 125
Recompute coordinates with the latest localization coefficientsRecompute
coordinates with the latest localization coefficientsEP,TM18:
0:49.00,LA33.135011252,LN-
111.392056255,HT1088.6877,RH0.0101,RV0.0199,DH1.42,DV2.64
GS,PN210,N 811526.27071,E 779805.32367,EL1381.125,--panel 120
EP,TM18: 1:42.00,LA33.135011270,LN-
111.392056257,HT1088.7706,RH0.0180,RV0.0331,DH1.42,DV2.61
GS,PN211,N 811526.28841,E 779805.32121,EL1381.208,--panel 120
EP,TM18: 2:30.00,LA33.135011267,LN-
111.392056251,HT1088.7838,RH0.0108,RV0.0197,DH1.42,DV2.58
GS,PN212,N 811526.28531,E 779805.32654,EL1381.221,--panel 120
EP,TM18:12:42.00,LA33.140259283,LN-
111.400843957,HT1075.9059,RH0.0121,RV0.0403,DH1.73,DV5.81
GS,PN213,N 812777.71225,E 775735.81856,EL1368.374,--panel 114 elev
EP,TM18:13:44.00,LA33.140259282,LN-
111.400843958,HT1075.8918,RH0.0117,RV0.0383,DH1.75,DV5.80
GS,PN214,N 812777.71152,E 775735.81815,EL1368.360,--panel 114 elev
EP,TM18:14:13.00,LA33.140259289,LN-
111.400843951,HT1075.9017,RH0.0191,RV0.0627,DH1.76,DV5.79
GS,PN215,N 812777.71799,E 775735.82366,EL1368.370,--panel 114 elev
EP,TM18:16:13.00,LA33.140259274,LN-
111.400843963,HT1075.4170,RH0.0186,RV0.0593,DH1.80,DV5.73
GS,PN216,N 812777.70305,E 775735.81378,EL1367.885,--panel 114 bc
EP,TM18:16:40.00,LA33.140259277,LN-
111.400843956,HT1075.4235,RH0.0191,RV0.0605,DH1.80,DV5.72
GS,PN217,N 812777.70672,E 775735.81984,EL1367.891,--panel 114 bc
EP,TM18:17:9.00,LA33.140259279,LN-
111.400843960,HT1075.4212,RH0.0187,RV0.0590,DH1.81,DV5.70
GS,PN218,N 812777.70858,E 775735.81639,EL1367.889,--panel 114 bc
EP,TM18:25:24.00,LA33.135054053,LN-
111.394942316,HT1081.9864,RH0.0158,RV0.0424,DH1.95,DV5.24
GS,PN219,N 811563.50815,E 777353.89173,EL1374.416,--panel 116
EP,TM18:26:9.00,LA33.135054039,LN-
111.394942312,HT1081.9724,RH0.0159,RV0.0421,DH1.96,DV5.19
GS,PN220,N 811563.49474,E 777353.89523,EL1374.402,--panel 116
EP,TM18:26:43.00,LA33.135054034,LN-
111.394942316,HT1081.9558,RH0.0178,RV0.0467,DH1.97,DV5.15
GS,PN221,N 811563.48888,E 777353.89195,EL1374.386,--panel 116
EP,TM18:36:0.00,LA33.140360572,LN-
111.405381638,HT1064.0185,RH0.0193,RV0.0197,DH1.82,DV1.68
GS,PN222,N 812871.18907,E 771881.57928,EL1356.476,--panel 113
EP,TM18:36:52.00,LA33.140360645,LN-
111.405381706,HT1064.0828,RH0.0190,RV0.0175,DH1.82,DV1.69
GS,PN223,N 812871.26302,E 771881.52151,EL1356.540,--panel 113
EP,TM18:37:25.00,LA33.140360657,LN-
111.405381710,HT1064.0518,RH0.0190,RV0.0176,DH1.82,DV1.69
GS,PN224,N 812871.27484,E 771881.51764,EL1356.509,--panel 113
EP,TM18:50:47.00,LA33.142350713,LN-

```
111.393740847,HT1082.4823,RH0.0180,RV0.0194,DH1.75,DV1.76
GS,PN225,N 814897.76731,E 778366.22001,EL1375.037,--panel 115
EP,TM18:51:42.00,LA33.142350703,LN-
111.393740868,HT1082.4478,RH0.0195,RV0.0198,DH1.74,DV1.77
GS,PN226,N 814897.75788,E 778366.20208,EL1375.002,--panel 115
EP,TM18:52:23.00,LA33.142350698,LN-
111.393740873,HT1082.4536,RH0.0191,RV0.0195,DH1.73,DV1.77
GS,PN227,N 814897.75243,E 778366.19766,EL1375.008,--panel 115
EP,TM18:52:47.00,LA33.142350698,LN-
111.393740858,HT1082.4637,RH0.0187,RV0.0191,DH1.72,DV1.77
GS,PN228,N 814897.75235,E 778366.21045,EL1375.018,--panel 115
EP,TM19: 5:27.00,LA33.144208476,LN-
111.400836636,HT1074.7240,RH0.0745,RV0.0870,DH1.52,DV1.74
GS,PN229,N 816768.99170,E 775732.58874,EL1367.336,--panel 110
EP,TM19: 8:11.00,LA33.144208619,LN-
111.400845124,HT1074.4984,RH0.0098,RV0.0113,DH1.48,DV1.74
GS,PN230,N 816769.11904,E 775725.38012,EL1367.111,--panel 110
EP,TM19: 8:39.00,LA33.144208612,LN-
111.400845120,HT1074.5012,RH0.0165,RV0.0195,DH1.47,DV1.74
GS,PN231,N 816769.11167,E 775725.38363,EL1367.113,--panel 110
EP,TM19: 9:9.00,LA33.144208625,LN-
111.400845110,HT1074.4993,RH0.0165,RV0.0195,DH1.46,DV1.74
GS,PN232,N 816769.12483,E 775725.39216,EL1367.112,--panel 110
EP,TM19:18:24.00,LA33.142931909,LN-
111.402539518,HT1066.1170,RH0.0134,RV0.0190,DH1.03,DV1.51
GS,PN233,N 815475.43321,E 774289.44764,EL1358.677,--panel 111
EP,TM19:18:46.00,LA33.142931912,LN-
111.402539530,HT1066.1302,RH0.0134,RV0.0190,DH1.03,DV1.52
GS,PN234,N 815475.43681,E 774289.43783,EL1358.690,--panel 111
EP,TM19:19:8.00,LA33.142931913,LN-
111.402539526,HT1066.1195,RH0.0130,RV0.0192,DH1.03,DV1.52
GS,PN235,N 815475.43715,E 774289.44118,EL1358.680,--panel 111
EP,TM19:26:16.00,LA33.142082500,LN-
111.403548296,HT1066.2646,RH0.0129,RV0.0198,DH1.05,DV1.61
GS,PN236,N 814614.99674,E 773434.70050,EL1358.790,--panel 112
EP,TM19:27:17.00,LA33.142082501,LN-
111.403548290,HT1066.2760,RH0.0129,RV0.0197,DH1.05,DV1.62
GS,PN237,N 814614.99794,E 773434.70592,EL1358.802,--panel 112
EP,TM19:28:23.00,LA33.142082499,LN-
111.403548292,HT1066.2782,RH0.0128,RV0.0197,DH1.05,DV1.64
GS,PN238,N 814614.99666,E 773434.70372,EL1358.804,--panel 112
--Set ROVER: record intrvl: OFF, elev cutoff: 12 deg, antenna ht: 6.670
--Send Base position to Rover:LA33.144917606,LN-
111.385024490,HT1095.2297
EP,TM19:33:21.00,LA33.142082455,LN-
111.403548233,HT1066.2704,RH0.0082,RV0.0120,DH1.07,DV1.70
GS,PN239,N 814614.95197,E 773434.75403,EL1358.796,--panel 112
EP,TM19:57:23.00,LA33.143086125,LN-
111.410900618,HT1058.2359,RH0.0140,RV0.0294,DH1.34,DV2.83
GS,PN240,N 815622.90545,E 770585.38218,EL1350.788,--panel 107 ir
EP,TM19:57:55.00,LA33.143086133,LN-
111.410900606,HT1058.2328,RH0.0148,RV0.0311,DH1.34,DV2.84
GS,PN241,N 815622.91339,E 770585.39220,EL1350.785,--panel 107 ir
EP,TM19:58:19.00,LA33.143086131,LN-
111.410900610,HT1058.2016,RH0.0169,RV0.0358,DH1.34,DV2.85
GS,PN242,N 815622.91185,E 770585.38920,EL1350.754,--panel 107 ir
EP,TM19:58:35.00,LA33.143086216,LN-
111.410901034,HT1058.8270,RH0.0737,RV0.1565,DH1.35,DV2.86
GS,PN243,N 815622.99717,E 770585.02864,EL1351.379,--panel 107 elev
EP,TM19:59:38.00,LA33.143086209,LN-
```

111.410901118,HT1058.8482,RH0.0113,RV0.0238,DH1.35,DV2.89
GS,PN243,N 815622.98947,E 770584.95752,EL1351.400,--panel 107 elev
EP,TM20: 1:38.00,LA33.143086070,LN-
111.410901189,HT1058.8269,RH0.0175,RV0.0275,DH1.03,DV1.63
GS,PN244,N 815622.84912,E 770584.89766,EL1351.379,--panel 107 elev
EP,TM20: 1:58.00,LA33.143086061,LN-
111.410901221,HT1058.8083,RH0.0177,RV0.0279,DH1.03,DV1.63
GS,PN245,N 815622.84003,E 770584.87025,EL1351.360,--panel 107 elev
EP,TM20: 7:49.00,LA33.144345383,LN-
111.410907663,HT1057.9740,RH0.0198,RV0.0328,DH1.02,DV1.71
GS,PN246,N 816895.56751,E 770576.59132,EL1350.572,--panel 106
EP,TM20: 9:6.00,LA33.144345409,LN-
111.410907580,HT1057.9902,RH0.0115,RV0.0192,DH1.02,DV1.72
GS,PN247,N 816895.59332,E 770576.66183,EL1350.588,--panel 106
EP,TM20: 9:59.00,LA33.144345419,LN-
111.410907583,HT1057.9294,RH0.0115,RV0.0193,DH1.02,DV1.73
GS,PN248,N 816895.60325,E 770576.65912,EL1350.527,--panel 106
EP,TM20:17:7.00,LA33.145656521,LN-
111.403947594,HT1065.5803,RH0.0136,RV0.0238,DH1.02,DV1.79
GS,PN249,N 818226.32021,E 773087.32973,EL1358.236,--panel 109
EP,TM20:18:38.00,LA33.145656505,LN-
111.403947584,HT1065.6058,RH0.0110,RV0.0194,DH1.02,DV1.80
GS,PN250,N 818226.30452,E 773087.33806,EL1358.261,--panel 109
EP,TM20:19:26.00,LA33.145656500,LN-
111.403947579,HT1065.5881,RH0.0109,RV0.0193,DH1.02,DV1.81
GS,PN251,N 818226.29921,E 773087.34194,EL1358.243,--panel 109
EP,TM20:27:9.00,LA33.150336814,LN-
111.410909213,HT1059.1872,RH0.0109,RV0.0192,DH1.02,DV1.83
GS,PN252,N 818908.21493,E 770570.83379,EL1351.858,--panel 105
EP,TM20:28:22.00,LA33.150336819,LN-
111.410909196,HT1059.1493,RH0.0108,RV0.0191,DH1.03,DV1.83
GS,PN253,N 818908.21989,E 770570.84856,EL1351.820,--panel 105
EP,TM20:28:50.00,LA33.150336816,LN-
111.410909195,HT1059.1405,RH0.0124,RV0.0220,DH1.03,DV1.83
GS,PN254,N 818908.21724,E 770570.84891,EL1351.811,--panel 105
EP,TM20:34:52.00,LA33.152371976,LN-
111.410933080,HT1052.8471,RH0.0133,RV0.0287,DH1.25,DV3.08
GS,PN255,N 820965.02080,E 770546.02977,EL1345.592,--panel 100 bc
EP,TM20:35:32.00,LA33.152372052,LN-
111.410933060,HT1052.8824,RH0.0294,RV0.0726,DH1.24,DV3.08
GS,PN256,N 820965.09703,E 770546.04705,EL1345.627,--panel 100 bc
EP,TM20:35:58.00,LA33.152372062,LN-
111.410933022,HT1052.9245,RH0.0159,RV0.0392,DH1.24,DV3.08
GS,PN257,N 820965.10741,E 770546.07902,EL1345.670,--panel 100 bc
EP,TM20:37:43.00,LA33.152372334,LN-
111.410932821,HT1053.2759,RH0.0162,RV0.0402,DH1.24,DV3.07
GS,PN258,N 820965.38275,E 770546.24911,EL1346.021,--panel 100 elev
EP,TM20:38:29.00,LA33.152372328,LN-
111.410932841,HT1053.3262,RH0.0187,RV0.0464,DH1.24,DV3.06
GS,PN259,N 820965.37685,E 770546.23200,EL1346.071,--panel 100 elev
EP,TM20:39:56.00,LA33.152372427,LN-
111.410932899,HT1053.2933,RH0.0284,RV0.0700,DH1.23,DV3.04
GS,PN260,N 820965.47665,E 770546.18254,EL1346.038,--panel 100 elev
EP,TM20:40:41.00,LA33.152369701,LN-
111.410949636,HT1052.8183,RH0.0256,RV0.0630,DH1.23,DV3.03
GS,PN261,N 820962.69012,E 770531.97655,EL1345.563,--panel 100 elev
EP,TM20:41:35.00,LA33.152372366,LN-
111.410932818,HT1053.3249,RH0.0112,RV0.0273,DH1.23,DV3.01
GS,PN262,N 820965.41537,E 770546.25182,EL1346.070,--panel 100 elev
EP,TM20:50:34.00,LA33.151003382,LN-

```
111.412434285,HT1053.8741,RH0.0088,RV0.0196,DH1.20,DV2.73
GS,PN263,N 819579.05451,E 769274.32567,EL1346.564,--panel 101
EP,TM20:51:42.00,LA33.151003390,LN-
111.412434292,HT1053.8542,RH0.0091,RV0.0199,DH1.20,DV2.68
GS,PN264,N 819579.06260,E 769274.31974,EL1346.544,--panel 101
EP,TM20:52:36.00,LA33.151003405,LN-
111.412434291,HT1053.8690,RH0.0103,RV0.0224,DH1.20,DV2.65
GS,PN265,N 819579.07766,E 769274.32045,EL1346.559,--panel 101
EP,TM20:59:20.00,LA33.145778186,LN-
111.412413341,HT1054.7717,RH0.0100,RV0.0198,DH1.20,DV2.39
GS,PN266,N 818340.84119,E 769294.79303,EL1347.417,--panel 104
EP,TM21: 0:4.00,LA33.145778191,LN-
111.412413338,HT1054.7612,RH0.0109,RV0.0196,DH1.12,DV1.96
GS,PN267,N 818340.84605,E 769294.79612,EL1347.407,--panel 104
EP,TM21: 0:43.00,LA33.145778190,LN-
111.412413340,HT1054.7505,RH0.0114,RV0.0196,DH1.12,DV1.95
GS,PN268,N 818340.84539,E 769294.79426,EL1347.396,--panel 104
EP,TM21: 6:30.00,LA33.145748499,LN-
111.414013323,HT1049.8019,RH0.0118,RV0.0196,DH1.10,DV1.84
GS,PN269,N 818307.92283,E 767936.17260,EL1342.441,--panel 102
EP,TM21: 7:8.00,LA33.145748491,LN-
111.414013324,HT1049.7868,RH0.0117,RV0.0195,DH1.10,DV1.83
GS,PN270,N 818307.91539,E 767936.17166,EL1342.426,--panel 102
EP,TM21: 7:44.00,LA33.145748501,LN-
111.414013321,HT1049.7753,RH0.0119,RV0.0197,DH1.10,DV1.82
GS,PN271,N 818307.92548,E 767936.17432,EL1342.415,--panel 102
EP,TM21:15:52.00,LA33.152200323,LN-
111.414087738,HT1048.1104,RH0.0124,RV0.0193,DH1.08,DV1.67
GS,PN272,N 820785.74131,E 767867.72132,EL1340.839,--panel 215
EP,TM21:16:27.00,LA33.152200315,LN-
111.414087725,HT1048.1183,RH0.0124,RV0.0192,DH1.07,DV1.66
GS,PN273,N 820785.73315,E 767867.73241,EL1340.847,--panel 215
EP,TM21:17:2.00,LA33.152200308,LN-
111.414087726,HT1048.1240,RH0.0124,RV0.0191,DH1.07,DV1.65
GS,PN274,N 820785.72569,E 767867.73134,EL1340.853,--panel 215
EP,TM21:25:33.00,LA33.152061716,LN-
111.421275169,HT1043.0941,RH0.0134,RV0.0193,DH1.06,DV1.53
GS,PN275,N 820640.02669,E 765161.48651,EL1335.808,--panel 209
EP,TM21:26:6.00,LA33.152061708,LN-
111.421275157,HT1043.0746,RH0.0134,RV0.0192,DH1.06,DV1.52
GS,PN276,N 820640.01889,E 765161.49646,EL1335.788,--panel 209
EP,TM21:26:38.00,LA33.152061705,LN-
111.421275149,HT1043.0681,RH0.0136,RV0.0194,DH1.06,DV1.51
GS,PN277,N 820640.01565,E 765161.50336,EL1335.782,--panel 209
--14:23:51.65,Solve for local Horizontal transformation
HC,PN16,LA33.142939640,LN-111.380436254,HT1108.6417,--H,V
HC,PN17,LA33.142348256,LN-111.380433218,HT1109.2881,--H,V
HC,PN69,LA33.163989586,LN-111.380569634,HT1098.8878,--H
HC,PN68,LA33.142525910,LN-111.363230610,HT1132.0702,--H,V
--14:23:54.67,Solve for local Vertical transformation
VC,PN16,LA33.142939640,LN-111.380436254,HT1108.6417,--H,V
VC,PN17,LA33.142348256,LN-111.380433218,HT1109.2881,--H,V
VC,PN70,LA33.154752126,LN-111.380509568,HT1101.6601,--V
VC,PN68,LA33.142525910,LN-111.363230610,HT1132.0702,--H,V
LH,PN1,Ha3.280491151,Hb-
0.008443273,Hc455160.254428665,Hd488608.624020559,SC0.999897015,RT-
0.085088
LV,PN1,Va0.000012333,Vb0.000118651,Vc279.564734314,Ba33.144917606,Bo-
111.385024490,Bh1095.2297
Recompute coordinates with the latest localization
```

```
coefficientsEP,TM21:50:40.00,LA33.150282142,LN-
111.421176977,HT1039.9373,RH0.0177,RV0.0194,DH1.41,DV1.54
GS,PN278,N 818841.65758,E 765248.53371,EL1332.586,--panel 210
EP,TM21:51:57.00,LA33.150282142,LN-
111.421176984,HT1039.9398,RH0.0183,RV0.0200,DH1.41,DV1.55
GS,PN279,N 818841.65790,E 765248.52799,EL1332.589,--panel 210
EP,TM21:52:49.00,LA33.150282129,LN-
111.421176967,HT1039.9384,RH0.0176,RV0.0193,DH1.41,DV1.55
GS,PN280,N 818841.64481,E 765248.54282,EL1332.587,--panel 210
EP,TM22: 7:42.00,LA33.145448268,LN-
111.421222789,HT1040.0732,RH0.0135,RV0.0194,DH1.50,DV2.19
GS,PN281,N 817998.81922,E 765211.35028,EL1332.691,--panel 211
EP,TM22: 8:16.00,LA33.145448278,LN-
111.421222774,HT1040.0748,RH0.0180,RV0.0263,DH1.49,DV2.19
GS,PN282,N 817998.82850,E 765211.36301,EL1332.693,--panel 211
EP,TM22: 8:55.00,LA33.145448261,LN-
111.421222779,HT1040.0675,RH0.0165,RV0.0243,DH1.49,DV2.20
GS,PN283,N 817998.81120,E 765211.35902,EL1332.686,--panel 211
EP,TM22:13:29.00,LA33.144777490,LN-
111.421199360,HT1038.0547,RH0.0144,RV0.0224,DH1.44,DV2.27
GS,PN284,N 817320.93400,E 765232.62896,EL1330.648,--panel 212
EP,TM22:14:29.00,LA33.144777497,LN-
111.421199367,HT1038.0770,RH0.0126,RV0.0197,DH1.43,DV2.28
GS,PN285,N 817320.94081,E 765232.62345,EL1330.671,--panel 212
EP,TM22:15:26.00,LA33.144777516,LN-
111.421199374,HT1038.0702,RH0.0131,RV0.0208,DH1.42,DV2.30
GS,PN286,N 817320.95977,E 765232.61694,EL1330.664,--panel 212
EP,TM22:16:38.00,LA33.144774119,LN-
111.421199995,HT1037.9444,RH0.0192,RV0.0313,DH1.41,DV2.32
GS,PN287,N 817317.52560,E 765232.09731,EL1330.538,--ne corner rr tie
EP,TM22:17:7.00,LA33.144774111,LN-
111.421199987,HT1037.9452,RH0.0187,RV0.0307,DH1.41,DV2.32
GS,PN288,N 817317.51735,E 765232.10367,EL1330.539,--ne corner rr tie
EP,TM22:17:37.00,LA33.144774116,LN-
111.421199978,HT1037.9411,RH0.0186,RV0.0308,DH1.40,DV2.33
GS,PN289,N 817317.52246,E 765232.11175,EL1330.535,--ne corner rr tie
EP,TM22:33:40.00,LA33.145461563,LN-
111.431434586,HT1023.5809,RH0.0208,RV0.0364,DH1.23,DV2.17
GS,PN290,N 818001.93082,E 759936.28843,EL1316.180,--panel 202 elev
EP,TM22:36:4.00,LA33.145461784,LN-
111.431434693,HT1023.5989,RH0.0205,RV0.0374,DH1.22,DV2.25
GS,PN291,N 818002.15361,E 759936.19682,EL1316.198,--panel 202 elev
EP,TM22:36:31.00,LA33.145461764,LN-
111.431434683,HT1023.5724,RH0.0200,RV0.0370,DH1.22,DV2.27
GS,PN292,N 818002.13350,E 759936.20580,EL1316.171,--panel 202 elev
EP,TM22:38:10.00,LA33.145461012,LN-
111.431434554,HT1022.5067,RH0.0193,RV0.0367,DH1.22,DV2.33
GS,PN293,N 818001.37388,E 759936.31627,EL1315.106,--panel 202 bc
EP,TM22:40:19.00,LA33.145460996,LN-
111.431434552,HT1022.5059,RH0.0188,RV0.0372,DH1.22,DV2.42
GS,PN294,N 818001.35741,E 759936.31802,EL1315.105,--panel 202 bc
EP,TM22:41:44.00,LA33.145461008,LN-
111.431434563,HT1022.5009,RH0.0256,RV0.0518,DH1.22,DV2.48
GS,PN295,N 818001.36986,E 759936.30917,EL1315.100,--panel 202 bc
EP,TM22:45:48.00,LA33.150001900,LN-
111.431420839,HT1024.4493,RH0.0185,RV0.0394,DH1.22,DV2.67
GS,PN296,N 818548.04792,E 759946.93757,EL1317.068,--panel 201
EP,TM22:46:43.00,LA33.150001890,LN-
111.431420818,HT1024.4572,RH0.0231,RV0.0507,DH1.22,DV2.71
GS,PN297,N 818548.03775,E 759946.95607,EL1317.076,--panel 201
```

```
EP,TM22:48:22.00,LA33.150001894,LN-
111.431420821,HT1024.4426,RH0.0196,RV0.0437,DH1.23,DV2.79
GS,PN298,N 818548.04167,E 759946.95311,EL1317.061,--panel 201
EP,TM22:49:45.00,LA33.150001907,LN-
111.431420828,HT1024.4544,RH0.0160,RV0.0365,DH1.24,DV2.86
GS,PN299,N 818548.05543,E 759946.94712,EL1317.073,--panel 201
EP,TM22:56:11.00,LA33.152101067,LN-
111.431424529,HT1033.5121,RH0.0177,RV0.0431,DH1.22,DV2.68
GS,PN300,N 820669.58061,E 759939.82586,EL1326.208,--panel 200elev
EP,TM22:57:20.00,LA33.152101089,LN-
111.431424506,HT1033.5839,RH0.0210,RV0.0461,DH1.23,DV2.74
GS,PN301,N 820669.60345,E 759939.84553,EL1326.279,--panel 200elev
EP,TM22:58:44.00,LA33.152101100,LN-
111.431424532,HT1033.5909,RH0.0195,RV0.0437,DH1.24,DV2.81
GS,PN302,N 820669.61453,E 759939.82325,EL1326.286,--panel 200elev
EP,TM23: 0:2.00,LA33.152100440,LN-
111.431424585,HT1032.6841,RH0.0232,RV0.0532,DH1.25,DV2.87
GS,PN303,N 820668.94735,E 759939.77977,EL1325.380,--panel 200
EP,TM23: 2:27.00,LA33.152100439,LN-
111.431424589,HT1032.6952,RH0.0191,RV0.0446,DH1.28,DV2.99
GS,PN304,N 820668.94579,E 759939.77628,EL1325.391,--panel 200
EP,TM23: 3:4.00,LA33.152100433,LN-
111.431424574,HT1032.7120,RH0.0193,RV0.0453,DH1.28,DV3.02
GS,PN305,N 820668.93947,E 759939.78896,EL1325.407,--panel 200
EP,TM23: 9:14.00,LA33.152009630,LN-
111.424355734,HT1032.0902,RH0.0284,RV0.0683,DH1.34,DV3.25
GS,PN306,N 820582.16151,E 762545.79955,EL1324.792,--panel 208
EP,TM23:10:21.00,LA33.152009668,LN-
111.424355639,HT1032.0299,RH0.0122,RV0.0293,DH1.35,DV3.27
GS,PN307,N 820582.20018,E 762545.87996,EL1324.732,--panel 208
EP,TM23:11:21.00,LA33.152009669,LN-
111.424355658,HT1031.9920,RH0.0158,RV0.0382,DH1.36,DV3.29
GS,PN308,N 820582.20136,E 762545.86446,EL1324.694,--panel 208
EP,TM23:12:9.00,LA33.152009671,LN-
111.424355667,HT1031.9635,RH0.0155,RV0.0374,DH1.36,DV3.30
GS,PN309,N 820582.20294,E 762545.85684,EL1324.665,--panel 208
EP,TM23:16:51.00,LA33.150120766,LN-
111.424354173,HT1029.7119,RH0.0156,RV0.0371,DH1.37,DV3.27
GS,PN310,N 818673.17053,E 762550.86025,EL1322.345,--panel 207
EP,TM23:17:31.00,LA33.150120772,LN-
111.424354191,HT1029.6741,RH0.0160,RV0.0380,DH1.37,DV3.25
GS,PN311,N 818673.17643,E 762550.84463,EL1322.307,--panel 207
EP,TM23:18:17.00,LA33.150120791,LN-
111.424354204,HT1029.6403,RH0.0167,RV0.0393,DH1.37,DV3.24
GS,PN312,N 818673.19534,E 762550.83340,EL1322.273,--panel 207
EP,TM23:29:5.00,LA33.144787669,LN-
111.431443966,HT1022.9064,RH0.0165,RV0.0393,DH1.31,DV3.11
GS,PN313,N 817320.84109,E 759929.60000,EL1315.481,--panel 203
EP,TM23:29:50.00,LA33.144787665,LN-
111.431443947,HT1022.9319,RH0.0162,RV0.0383,DH1.30,DV3.07
GS,PN314,N 817320.83708,E 759929.61553,EL1315.506,--panel 203
EP,TM23:30:29.00,LA33.144787656,LN-
111.431443941,HT1022.9347,RH0.0166,RV0.0389,DH1.29,DV3.03
GS,PN315,N 817320.82801,E 759929.62090,EL1315.509,--panel 203
EP,TM23:36:40.00,LA33.142820829,LN-
111.431417743,HT1024.3993,RH0.0289,RV0.0627,DH1.24,DV2.68
GS,PN316,N 815333.08526,E 759955.59654,EL1316.902,--panel 204 elev
EP,TM23:37:22.00,LA33.142820921,LN-
111.431417859,HT1024.3063,RH0.0200,RV0.0354,DH0.90,DV1.59
GS,PN317,N 815333.17814,E 759955.49799,EL1316.809,--panel 204 elev
```

```
EP,TM23:38:44.00,LA33.142820929,LN-
111.431417845,HT1024.3058,RH0.0257,RV0.0455,DH0.89,DV1.59
GS,PN318,N 815333.18605,E 759955.50977,EL1316.808,--panel 204 elev
--Set ROVER: record intrvl: OFF, elev cutoff: 12 deg, antenna ht: 6.670
--Send Base position to Rover:LA33.144917606,LN-
111.385024490,HT1095.2297
EP,TM23:48:25.00,LA33.142784552,LN-
111.421201765,HT1039.3391,RH0.0115,RV0.0195,DH0.89,DV1.52
GS,PN319,N 815306.75642,E 765234.69540,EL1331.860,--panel 213
EP,TM23:48:59.00,LA33.142784557,LN-
111.421201773,HT1039.3237,RH0.0111,RV0.0188,DH0.89,DV1.51
GS,PN320,N 815306.76179,E 765234.68940,EL1331.845,--panel 213
EP,TM23:49:30.00,LA33.142784550,LN-
111.421201769,HT1039.3275,RH0.0114,RV0.0192,DH0.89,DV1.51
GS,PN321,N 815306.75422,E 765234.69264,EL1331.848,--panel 213
EP,TM23:50:31.00,LA33.142823033,LN-
111.421184709,HT1040.0072,RH0.0136,RV0.0228,DH0.89,DV1.50
GS,PN322,N 815345.67739,E 765249.10164,EL1332.530,--post e ditch
EP,TM23:50:59.00,LA33.142823039,LN-
111.421184722,HT1040.0021,RH0.0173,RV0.0291,DH0.89,DV1.49
GS,PN323,N 815345.68288,E 765249.09023,EL1332.524,--post e ditch
EP,TM23:51:27.00,LA33.142823028,LN-
111.421184715,HT1040.0199,RH0.0176,RV0.0295,DH0.89,DV1.49
GS,PN324,N 815345.67178,E 765249.09630,EL1332.542,--post e ditch
EP,TM23:58:4.00,LA33.142859658,LN-
111.424335516,HT1032.2648,RH0.0194,RV0.0310,DH0.89,DV1.42
GS,PN325,N 815377.34416,E 762573.15342,EL1324.778,--panel
EP,TM23:58:42.00,LA33.142859654,LN-
111.424335523,HT1032.2701,RH0.0187,RV0.0297,DH0.89,DV1.41
GS,PN326,N 815377.33955,E 762573.14780,EL1324.784,--panel
EP,TM23:59:20.00,LA33.142859645,LN-
111.424335521,HT1032.2618,RH0.0187,RV0.0296,DH1.11,DV1.79
GS,PN327,N 815377.33086,E 762573.14934,EL1324.775,--panel
EP,TM 0: 3:44.00,LA33.144148501,LN-
111.424302740,HT1031.1770,RH0.0145,RV0.0228,DH1.22,DV1.93
GS,PN328,N 816679.97414,E 762598.43854,EL1323.738,--se cor hdwl
EP,TM 0: 4:11.00,LA33.144148514,LN-
111.424302758,HT1031.1974,RH0.0191,RV0.0301,DH1.22,DV1.93
GS,PN329,N 816679.98683,E 762598.42350,EL1323.758,--se cor hdwl
EP,TM 0: 4:36.00,LA33.144148506,LN-
111.424302757,HT1031.1942,RH0.0190,RV0.0301,DH1.22,DV1.94
GS,PN330,N 816679.97931,E 762598.42465,EL1323.755,--se cor hdwl
EP,TM 0:17:32.00,LA33.142855534,LN-
111.414031823,HT1048.7482,RH0.0120,RV0.0197,DH1.17,DV1.93
GS,PN331,N 815384.09998,E 767926.67229,EL1341.282,--panel 214
EP,TM 0:18:12.00,LA33.142855542,LN-
111.414031817,HT1048.7151,RH0.0124,RV0.0203,DH1.17,DV1.93
GS,PN332,N 815384.10776,E 767926.67771,EL1341.249,--panel 214
EP,TM 0:18:51.00,LA33.142855533,LN-
111.414031835,HT1048.7548,RH0.0125,RV0.0198,DH1.11,DV1.74
GS,PN333,N 815384.09840,E 767926.66227,EL1341.288,--panel 214
EP,TM 0:20:33.00,LA33.142820066,LN-
111.414064294,HT1049.2348,RH0.0222,RV0.0348,DH1.11,DV1.74
GS,PN334,N 815348.19512,E 767899.17183,EL1341.767,--post se cor dtch
EP,TM 0:21:1.00,LA33.142820044,LN-
111.414064309,HT1049.1910,RH0.0185,RV0.0291,DH1.11,DV1.74
GS,PN335,N 815348.17352,E 767899.15936,EL1341.723,--post se cor dtch
EP,TM 0:21:27.00,LA33.142820074,LN-
111.414064315,HT1049.2004,RH0.0176,RV0.0277,DH1.11,DV1.75
GS,PN336,N 815348.20353,E 767899.15382,EL1341.733,--post se cor dtch
```

```
EP,TM 0:24:51.00,LA33.144292461,LN-
111.414068142,HT1048.3448,RH0.0176,RV0.0280,DH1.10,DV1.75
GS,PN337,N 816836.27148,E 767892.74464,EL1340.931,--panel 103
EP,TM 0:25:20.00,LA33.144292464,LN-
111.414068145,HT1048.3529,RH0.0169,RV0.0269,DH1.10,DV1.75
GS,PN338,N 816836.27466,E 767892.74263,EL1340.939,--panel 103
EP,TM 0:25:47.00,LA33.144292476,LN-
111.414068148,HT1048.3652,RH0.0197,RV0.0313,DH1.10,DV1.75
GS,PN339,N 816836.28653,E 767892.73979,EL1340.951,--panel 103
```

```
JB,NMSONOKAIX,DT12-9-1997,TM06:24:10.56
MO,AD0,UN0,SF1.0000000,EC0,EO0.0
SP,PN100,N 5000.0000,E 5000.0000,EL100.0000,--PANEL
SP,PN127,N 807536.3801,E 786298.5190,EL1895.4750,--PANEL
SP,PN130,N 804892.2514,E 786304.8259,EL1910.5950,--PANEL
SP,PN134,N 801069.5412,E 786304.8488,EL1950.2900,--PANEL
RS,PN134,CR0.00000,ZE89.16050,SD1990.320
LS,HI5.150,HR4.680
RS,PN130,CR178.27300,ZE90.27550,SD1833.695
LS,HI5.150,HR4.080
--Resection, Hor precision=5197
SP,PN135,N 803059.1483,E 786330.5099,EL1924.3300,--RESECT PT
OC,OP135,N 803059.1483,E 786330.5099,EL1924.330,--RESECT PT
BK,OP135,BP134,BS180.4420,BC0.0000
BK,OP135,BP134,BS180.4420,BC0.0000
LS,HI5.150,HR4.680
SS,OP135,FP136,AR178.59500,ZE90.28300,SD1792.740,--SHLDR
SS,OP135,FP137,AR178.27200,ZE90.26400,SD1790.755,--EP
SS,OP135,FP138,AR177.34200,ZE90.26150,SD1783.930,--EP
SS,OP135,FP139,AR177.09300,ZE90.28350,SD1783.875,--SHLDR
SS,OP135,FP140,AR174.21500,ZE90.32050,SD684.830,--SHLDR
SS,OP135,FP141,AR175.20500,ZE90.24500,SD683.630,--EP
SS,OP135,FP142,AR177.40550,ZE90.26200,SD682.665,--EP
SS,OP135,FP143,AR179.07550,ZE90.36450,SD681.005,--SHLDR
SS,OP135,FP144,AR2.56100,ZE89.23450,SD619.775,--SHLDR
SS,OP135,FP145,AR1.36250,ZE89.18250,SD618.925,--EP
SS,OP135,FP146,AR359.04050,ZE89.19050,SD618.415,--EP
SS,OP135,FP147,AR357.32000,ZE89.30500,SD618.865,--SHLDR
SS,OP135,FP148,AR0.10500,ZE89.15150,SD1927.405,--SHLDR
SS,OP135,FP149,AR359.52450,ZE89.15000,SD1927.760,--EP
SS,OP135,FP150,AR359.05150,ZE89.14550,SD1927.150,--EP
SS,OP135,FP151,AR358.45050,ZE89.16350,SD1927.430,--SHLDR
RS,PN130,CR163.49300,ZE89.41450,SD1368.265
LS,HI5.350,HR4.080
RS,PN127,CR184.04150,ZE90.21100,SD1278.100
LS,HI5.350,HR4.180
--Resection, Hor precision=1
SP,PN152,N 807638.3198,E 793434.6726,EL1902.0819,--RESECT PT
RS,PN130,CR0.00000,ZE89.41450,SD1368.265
LS,HI5.350,HR4.080
RS,PN127,CR184.04150,ZE90.21100,SD1278.100
LS,HI5.350,HR4.180
--Resection, Hor precision=5108
SP,PN152,N 806259.3078,E 786254.6337,EL1902.0819,--RESECT PT
OC,OP152,N 806259.3078,E 786254.6337,EL1902.082,--RESECT PT
BK,OP152,BP130,BS177.5350,BC0.0000
BK,OP152,BP130,BS177.5350,BC0.0000
LS,HI5.350,HR4.680
SS,OP152,FP153,AR184.52250,ZE90.22100,SD1207.255,--SHLDR
SS,OP152,FP154,AR184.10250,ZE90.20000,SD1205.885,--EP
SS,OP152,FP155,AR182.52100,ZE90.19250,SD1204.660,--EP
SS,OP152,FP156,AR182.17100,ZE90.21000,SD1205.195,--SHLDR
SS,OP152,FP157,AR182.47150,ZE90.34200,SD462.405,--SHLDR
SS,OP152,FP158,AR184.22300,ZE90.26250,SD463.100,--EP
SS,OP152,FP159,AR187.40350,ZE90.29250,SD463.710,--EP
SS,OP152,FP160,AR189.38350,ZE90.40500,SD465.055,--SHLDR
SS,OP152,FP161,AR1.21250,ZE89.46050,SD793.120,--SHLDR
SS,OP152,FP162,AR0.34400,ZE89.43000,SD793.460,--EP
SS,OP152,FP163,AR358.40550,ZE89.44200,SD796.805,--EP
SS,OP152,FP164,AR357.36100,ZE89.50350,SD795.550,--SHLDR
```

```
SP,PN121,N 811930.3980,E 781031.0769,EL1880.1430,--PANEL
SP,PN123,N 808584.7778,E 781019.7196,EL1877.1170,--PANEL
SP,PN125,N 804841.6510,E 781035.6473,EL1894.7240,--PANEL
RS,PN123,CR0.00000,ZE90.07550,SD1530.585
LS,HI5.290,HR4.680
RS,PN121,CR177.04550,ZE90.00550,SD1816.840
--Resection, Hor precision=4750
SP,PN165,N 810114.2998,E 781067.2076,EL1879.9667,--RESECT PT
OC,OP165,N 810114.2998,E 781067.2076,EL1879.967,--RESECT PT
BK,OP165,BP123,BS181.4642,BC0.0000
SS,OP165,FP166,AR174.38500,ZE90.01300,SD1299.660,--SHLDR
SS,OP165,FP167,AR175.00300,ZE90.00150,SD1297.845,--EP
SS,OP165,FP168,AR176.12450,ZE90.01500,SD1295.125,--EP
SS,OP165,FP169,AR176.48300,ZE90.06100,SD1293.970,--SHLDR
SS,OP165,FP170,AR163.19400,ZE89.54500,SD318.540,--SHLDR
SS,OP165,FP171,AR164.46050,ZE89.52050,SD316.335,--EP
SS,OP165,FP172,AR169.37100,ZE89.59550,SD310.305,--EP
SS,OP165,FP173,AR172.22350,ZE90.13500,SD308.390,--SHLDR
SS,OP165,FP174,AR1.36500,ZE90.05500,SD1122.850,--SHLDR
SS,OP165,FP175,AR1.05050,ZE90.06250,SD1121.170,--EP
SS,OP165,FP176,AR359.46450,ZE90.07000,SD1119.220,--EP
LS,HI5.290,HR6.680
SS,OP165,FP177,AR359.55150,ZE90.16000,SD1376.720,--PAV
SS,OP165,FP178,AR0.27400,ZE90.17000,SD1378.420,--EP
LS,HI5.290,HR4.680
SS,OP165,FP179,AR0.07000,ZE90.03250,SD1624.565,--EP
SS,OP165,FP180,AR359.38000,ZE90.03250,SD1625.450,--PAV
RS,PN123,CR0.00000,ZE90.09300,SD1615.770
LS,HI5.270,HR4.680
RS,PN125,CR181.27000,ZE89.36050,SD2128.370
LS,HI5.270,HR6.380
--Resection, Hor precision=5975
SP,PN181,N 806969.5647,E 781049.8325,EL1880.9362,--RESECT PT
OC,OP181,N 806969.5647,E 781049.8325,EL1880.936,--RESECT PT
BK,OP181,BP123,BS358.5555,BC0.0000
LS,HI5.270,HR4.680
SS,OP181,FP182,AR181.04250,ZE89.36400,SD2023.205,--EP
SS,OP181,FP183,AR181.51050,ZE89.36500,SD2023.765,--EP
SS,OP181,FP184,AR181.08450,ZE89.38250,SD1115.145,--EP
SS,OP181,FP185,AR182.32050,ZE89.38450,SD1112.705,--EP
SS,OP181,FP186,AR359.20300,ZE90.37200,SD111.245,--EP
SS,OP181,FP187,AR346.34550,ZE90.34100,SD116.810,--EP
SS,OP181,FP188,AR0.40550,ZE90.10200,SD701.375,--EP
SS,OP181,FP189,AR358.24200,ZE90.10550,SD701.845,--EP
SS,OP181,FP190,AR0.42500,ZE90.06000,SD1313.275,--EP
SS,OP181,FP191,AR359.31000,ZE90.05350,SD1315.115,--EP
SP,PN110,N 816769.1187,E 775725.3853,EL1367.1100,--PANEL
SP,PN114,N 812777.7060,E 775735.8164,EL1368.3680,--PANEL
RS,PN110,CR357.47350,ZE89.59550,SD1785.360
LS,HI5.400,HR4.680
RS,PN110,CR0.00000,ZE90.00050,SD1785.355
RS,PN114,CR182.58550,ZE89.58500,SD2208.045
LS,HI5.400,HR4.130
--Resection, Hor precision=6269
SP,PN192,N 814984.9278,E 775781.4108,EL1366.3082,--RESECT PT
OC,OP192,N 814984.9278,E 775781.4108,EL1366.308,--RESECT PT
BK,OP192,BP110,BS358.1205,BC0.0000
LS,HI5.400,HR4.680
SS,OP192,FP193,AR187.22550,ZE90.01150,SD1177.050,--EP
SS,OP192,FP194,AR187.32100,ZE90.02550,SD1140.810,--PAV
```

```
SS,OP192,FP195,AR184.25450,ZE90.10400,SD936.425,--EP
SS,OP192,FP196,AR186.04400,ZE90.14400,SD931.505,--EP
SS,OP192,FP197,AR186.08200,ZE90.06200,SD424.965,--EP
SS,OP192,FP198,AR189.47450,ZE90.10000,SD427.110,--EP
SS,OP192,FP199,AR359.41550,ZE90.04100,SD650.235,--EP
SS,OP192,FP200,AR356.20300,ZE90.04250,SD654.590,--EP
SS,OP192,FP201,AR0.51350,ZE90.02050,SD1520.150,--EP
SS,OP192,FP202,AR359.26150,ZE90.01200,SD1521.185,--EP
SP,PN100,N 820965.0750,E 770546.0518,EL1346.0500,--PANEL
SP,PN105,N 818908.2174,E 770570.8439,EL1351.8300,--PANEL
SP,PN106,N 816895.5882,E 770576.6372,EL1350.5620,--PANEL
SP,PN107,N 815622.9104,E 770585.3880,EL1351.3800,--PANEL
SP,PN216,N 815636.5507,E 775719.1614,EL1366.1960,--EP
SP,PN217,N 816504.8735,E 775756.5031,EL1366.1544,--EP
SP,PN218,N 816504.8214,E 775718.7432,EL1366.4857,--EP
RS,PN107,CR0.00000,ZE90.02000,SD767.920
LS,HI5.450,HR4.010
RS,PN106,CR174.52400,ZE90.04250,SD506.245
LS,HI5.450,HR4.680
--Resection, Hor precision=5357
SP,PN219,N 816390.3721,E 770607.3727,EL1350.4059,--RESECT PT
OC,OP219,N 816390.3721,E 770607.3727,EL1350.406,--RESECT PT
BK,OP219,BP107,BS181.3827,BC0.0000
SS,OP219,FP220,AR177.53550,ZE90.04400,SD938.610,--EP
SS,OP219,FP221,AR176.15150,ZE90.04350,SD939.790,--EP
SS,OP219,FP222,AR166.32400,ZE90.17300,SD176.820,--EP
SS,OP219,FP223,AR175.12400,ZE90.15350,SD170.535,--EP
SS,OP219,FP224,AR1.22200,ZE89.59300,SD687.975,--EP
SS,OP219,FP225,AR359.09450,ZE89.59300,SD687.985,--EP
```

```
JB,NMSONOKAI4,DT01-26-1998,TM16:04:38
MO,AD0,UN0,SF1.000000,EC0,EO0.0000
SP,PN1,N 100000.00000,E 100000.00000,EL1500.000,--START
SP,PN1,N 100000.00000,E 100000.00000,EL1455.150,--SET 40D HUNT ELL
SP,PN124,N 806113.64720,E 779676.80380,EL1393.380,--AIR PANEL
SP,PN127,N 807534.80100,E 786298.12960,EL1401.330,--AIR PANEL
SP,PN130,N 804890.47920,E 786304.43690,EL1416.490,--AIR PANEL
SP,PN134,N 801067.49010,E 786304.45990,EL1456.810,--AIR PANEL
--Set BASE : record intrvl: OFF, elev cutoff: 15 deg, antenna ht: 4.790
--15:32:2.50,Get base position at BASE: LA33.120952188,LN-
111.380650124,HT1516.7126
--16:42:38.13,Set Base receiver position
BP,PN1,LA33.120952188,LN-111.380650124,HT1516.7126
--Set BASE : record intrvl: OFF, elev cutoff: 15 deg, antenna ht: 4.790
--16:43:42.12,Set Base receiver position
BP,PN1,LA33.120952188,LN-111.380650124,HT1516.7126
--Set ROVER: record intrvl: OFF, elev cutoff: 15 deg, antenna ht: 7.370
--Set ROVER: record intrvl: OFF, elev cutoff: 15 deg, antenna ht: 7.370
--Set ROVER: record intrvl: OFF, elev cutoff: 15 deg, antenna ht: 7.370
--Send Base position to Rover:LA33.120952188,LN-
111.380650124,HT1516.7126
EP,TM15:48:48.00,LA33.120838560,LN-
111.380562092,HT1518.7697,RH0.0066,RV0.0098,DH1.10,DV1.60
--15:48:48.00,Add cntrl pt: 134,LA= 33.120838560,LN= -111.380562092,HT=
1518.7697,--H,V
--16:59:37.49,Solve for local Horizontal transformation
HC,PN134,LA33.120838560,LN-111.380562092,HT1518.7697,--H,V
--16:59:39.41,Solve for local Vertical transformation
VC,PN134,LA33.120838560,LN-111.380562092,HT1518.7697,--H,V
LH,PN1,Ha3.280839895,Hb0.000000000,Hc458145.666928827,Hd473098.350489900
,SC1.000000000,RT0.000000
LV,PN1,Va0.000000000,Vb0.000000000,Vc-61.959685033,Ba33.120952188,Bo-
111.380650124,Bh1516.7126
EP,TM15:50:6.00,LA33.120838533,LN-
111.380562085,HT1518.7652,RH0.0262,RV0.0387,DH1.06,DV1.56
GS,PN2,N 801067.46239,E 786304.46610,EL1456.806,--BOGUS
EP,TM15:53:43.00,LA33.120750966,LN-
111.380472950,HT1518.3825,RH0.0197,RV0.0197,DH2.70,DV2.80
--15:53:43.00,Add cntrl pt: 134,LA= 33.120750966,LN= -111.380472950,HT=
1518.3825,--H,V
EP,TM16: 3:0.00,LA33.124533354,LN-
111.380460884,HT1477.9659,RH0.0230,RV0.0230,DH3.20,DV3.30
--16: 3:0.00,Add cntrl pt: 130,LA= 33.124533354,LN= -111.380460884,HT=
1477.9659,--H,V
EP,TM16: 6:32.00,LA33.131149636,LN-
111.380459936,HT1462.8346,RH0.0230,RV0.0230,DH3.30,DV3.40
--16: 6:32.00,Add cntrl pt: 127,LA= 33.131149636,LN= -111.380459936,HT=
1462.8346,--H,V
EP,TM16:17:23.00,LA33.125760540,LN-
111.392258256,HT1455.0394,RH0.0164,RV0.0164,DH1.60,DV1.80
--16:17:23.00,Add cntrl pt: 124,LA= 33.125760540,LN= -111.392258256,HT=
1455.0394,--H,V
SP,PN125,N 804839.87520,E 781034.87380,EL1400.640,--BC HH HAW SAN
EP,TM16:25:1.00,LA33.124496868,LN-
111.390663354,HT1462.3524,RH0.0164,RV0.0197,DH1.60,DV1.80
--16:25:1.00,Add cntrl pt: 125,LA= 33.124496868,LN= -111.390663354,HT=
1462.3524,--H,V
--17:35:56.94,Solve for local Horizontal transformation
HC,PN134,LA33.120750966,LN-111.380472950,HT1518.3825,--H,V
HC,PN130,LA33.124533354,LN-111.380460884,HT1477.9659,--H,V
```

```
HC,PN127,LA33.131149636,LN-111.380459936,HT1462.8346,--H,V
HC,PN124,LA33.125760540,LN-111.392258256,HT1455.0394,--H,V
HC,PN125,LA33.124496868,LN-111.390663354,HT1462.3524,--H,V
--17:35:59.52,Solve for local Vertical transformation
VC,PN134,LA33.120750966,LN-111.380472950,HT1518.3825,--H,V
VC,PN130,LA33.124533354,LN-111.380460884,HT1477.9659,--H,V
VC,PN127,LA33.131149636,LN-111.380459936,HT1462.8346,--H,V
VC,PN124,LA33.125760540,LN-111.392258256,HT1455.0394,--H,V
VC,PN125,LA33.124496868,LN-111.390663354,HT1462.3524,--H,V
LH,PN1,Ha3.280702252,Hb-
0.008800701,Hc458963.216127278,Hd472320.202435550,SC0.999961644,RT-
0.091332
LV,PN1,Va0.000096213,Vb0.000043886,Vc-75.578245160,Ba33.120952188,Bo-
111.380650124,Bh1516.7126
EP,TM16:45:29.00,LA33.120773783,LN-
111.380607499,HT1518.2421,RH0.0484,RV0.0688,DH1.38,DV1.96
GS,PN200,N 801090.27864,E 786190.07305,EL1456.672,--NG
EP,TM16:46:43.00,LA33.120947706,LN-
111.381883213,HT1515.2338,RH0.0500,RV0.0722,DH1.37,DV1.97
GS,PN201,N 801263.17432,E 785105.63598,EL1453.635,--NG
EP,TM16:48:29.00,LA33.121216256,LN-
111.384446821,HT1494.7042,RH0.0544,RV0.0804,DH1.35,DV2.00
GS,PN202,N 801528.90199,E 782926.65529,EL1433.045,--NG
EP,TM16:49:28.00,LA33.121337490,LN-
111.385660321,HT1488.9813,RH0.0700,RV0.0741,DH1.34,DV2.01
GS,PN203,N 801648.78906,E 781895.24886,EL1427.293,--NG
EP,TM16:50:26.00,LA33.121433303,LN-
111.390583391,HT1493.1306,RH0.0578,RV0.0876,DH1.33,DV2.02
GS,PN204,N 801743.63777,E 781110.68809,EL1431.421,--NG
EP,TM16:51:14.00,LA33.121532476,LN-
111.391584129,HT1495.2337,RH0.0595,RV0.0910,DH1.33,DV2.03
GS,PN205,N 801841.73652,E 780260.13038,EL1433.500,--NG
EP,TM16:52:58.00,LA33.121607315,LN-
111.392286146,HT1495.9406,RH0.0685,RV0.0760,DH1.31,DV2.06
GS,PN206,N 801915.89185,E 779663.45440,EL1434.191,--NG
EP,TM16:53:45.00,LA33.121637836,LN-
111.392612330,HT1496.1870,RH0.0605,RV0.0957,DH1.31,DV2.07
GS,PN207,N 801946.05423,E 779386.22772,EL1434.430,--NG
EP,TM16:54:37.00,LA33.121694693,LN-
111.393083704,HT1497.7456,RH0.0678,RV0.0770,DH1.30,DV2.08
GS,PN208,N 802002.53240,E 778985.57161,EL1435.977,--NG
EP,TM16:55:44.00,LA33.121747056,LN-
111.393640770,HT1500.4126,RH0.0437,RV0.0709,DH1.29,DV2.10
GS,PN209,N 802054.29601,E 778512.11778,EL1438.631,--NG
EP,TM16:58:10.00,LA33.121858726,LN-
111.392207368,HT1495.3225,RH0.0665,RV0.0795,DH1.28,DV2.14
GS,PN210,N 802170.16302,E 779729.75942,EL1433.578,--PAV
EP,TM17: 1:38.00,LA33.121802471,LN-
111.394943031,HT1503.8535,RH0.0626,RV0.0765,DH1.22,DV2.02
GS,PN211,N 802107.61782,E 777405.48794,EL1442.040,--IE
EP,TM17: 3:8.00,LA33.121798794,LN-
111.395216456,HT1504.7186,RH0.0430,RV0.0727,DH1.22,DV2.06
GS,PN212,N 802103.34193,E 777173.17597,EL1442.898,--IE
EP,TM17: 4:52.00,LA33.121793488,LN-
111.395576032,HT1503.1001,RH0.0621,RV0.0799,DH1.22,DV2.11
GS,PN213,N 802097.24689,E 776867.66765,EL1441.271,--IE
EP,TM17: 7:33.00,LA33.121823850,LN-
111.395554411,HT1507.4169,RH0.0617,RV0.0831,DH1.21,DV2.19
GS,PN214,N 802127.97816,E 776885.96453,EL1445.589,--PAV
EP,TM17: 9:28.00,LA33.121775495,LN-
```

111.400700713,HT1504.7799,RH0.0446,RV0.0827,DH1.21,DV2.25
GS,PN215,N 802076.78733,E 775912.10198,EL1442.922,--IE
EP,TM17:10:20.00,LA33.121810136,LN-
111.400824125,HT1506.8914,RH0.0448,RV0.0839,DH1.21,DV2.28
GS,PN216,N 802111.55229,E 775807.15913,EL1445.031,--PAV
EP,TM17:12:29.00,LA33.121800385,LN-
111.402087223,HT1510.2899,RH0.0633,RV0.0966,DH1.24,DV2.58
GS,PN217,N 802099.18082,E 774733.96534,EL1448.398,--PAV
EP,TM17:14:14.00,LA33.121786734,LN-
111.403793815,HT1510.2031,RH0.0403,RV0.0871,DH1.24,DV2.68
GS,PN218,N 802082.04115,E 773283.95472,EL1448.269,--PAV
EP,TM17:16:1.00,LA33.121777401,LN-
111.405369864,HT1509.9499,RH0.0420,RV0.0940,DH1.24,DV2.78
GS,PN219,N 802069.57915,E 771944.85202,EL1447.976,--PAV
EP,TM17:17:3.00,LA33.121772364,LN-
111.410278580,HT1509.8344,RH0.0430,RV0.0981,DH1.24,DV2.84
GS,PN220,N 802062.76754,E 771172.75356,EL1447.838,--PAV
EP,TM17:17:52.00,LA33.121770151,LN-
111.411003967,HT1509.7614,RH0.0379,RV0.0879,DH1.25,DV2.89
GS,PN221,N 802059.17071,E 770556.41735,EL1447.747,--PAV
EP,TM17:22:11.00,LA33.121770618,LN-
111.412569511,HT1509.4716,RH0.0399,RV0.0995,DH1.26,DV3.16
GS,PN222,N 802056.74693,E 769226.21683,EL1447.418,--PAV
EP,TM17:23:28.00,LA33.121770100,LN-
111.413149270,HT1507.1157,RH0.0363,RV0.0925,DH1.27,DV3.24
GS,PN223,N 802055.16476,E 768733.61314,EL1445.048,--PAV
EP,TM17:24:57.00,LA33.121771043,LN-
111.414743444,HT1499.0498,RH0.0378,RV0.0985,DH1.28,DV3.33
GS,PN224,N 802053.24695,E 767379.08620,EL1436.942,--PAV
EP,TM17:26:59.00,LA33.121770651,LN-
111.421216951,HT1479.7419,RH0.0367,RV0.0981,DH1.29,DV3.45
GS,PN225,N 802048.50837,E 765277.41602,EL1417.573,--PAV
EP,TM17:28:10.00,LA33.121770857,LN-
111.421884493,HT1473.9394,RH0.0365,RV0.0987,DH1.30,DV3.52
GS,PN226,N 802047.56875,E 764710.22412,EL1411.753,--PAV
EP,TM17:29:33.00,LA33.121770627,LN-
111.422428670,HT1470.2863,RH0.0353,RV0.0969,DH1.31,DV3.60
GS,PN227,N 802046.40686,E 764247.85222,EL1408.087,--PAV
EP,TM17:31:9.00,LA33.121770802,LN-
111.423745522,HT1460.2857,RH0.0342,RV0.0951,DH1.32,DV3.68
GS,PN228,N 802044.36433,E 763128.95886,EL1398.053,--PAV
EP,TM17:33:9.00,LA33.121772853,LN-
111.425213783,HT1448.9282,RH0.0355,RV0.1000,DH1.33,DV3.76
GS,PN229,N 802044.00788,E 761881.41338,EL1386.659,--PAV
EP,TM17:34:30.00,LA33.121781060,LN-
111.430174714,HT1440.0465,RH0.0343,RV0.0970,DH1.34,DV3.80
GS,PN230,N 802050.73910,E 761064.92140,EL1377.754,--PAV
EP,TM17:42:37.00,LA33.121827527,LN-
111.395218672,HT1506.8105,RH0.0383,RV0.0966,DH1.33,DV3.35
GS,PN231,N 802132.37837,E 777171.22283,EL1444.991,--PAV
EP,TM17:43:26.00,LA33.121830756,LN-
111.394940756,HT1506.1477,RH0.0381,RV0.0963,DH1.33,DV3.37
GS,PN232,N 802136.21049,E 777407.35196,EL1444.335,--PAV
EP,TM17:45:3.00,LA33.121845933,LN-
111.393584364,HT1501.7152,RH0.0368,RV0.0932,DH1.34,DV3.39
GS,PN233,N 802154.34917,E 778559.80008,EL1439.936,--PAV
EP,TM17:45:36.00,LA33.121817768,LN-
111.393585430,HT1498.6599,RH0.0368,RV0.0932,DH1.34,DV3.39
GS,PN234,N 802125.88036,E 778558.96347,EL1436.881,--IE
EP,TM17:46:46.00,LA33.121849055,LN-

111.393265907,HT1500.0573,RH0.0365,RV0.0924,DH1.34,DV3.39
GS,PN235,N 802158.16752,E 778830.37515,EL1438.286,--PAV
EP,TM17:47:21.00,LA33.121819161,LN-
111.393272971,HT1497.3332,RH0.0365,RV0.0924,DH1.34,DV3.39
GS,PN236,N 802127.93856,E 778824.44736,EL1435.562,--IE
EP,TM17:48:54.00,LA33.121820796,LN-
111.393021199,HT1495.6786,RH0.0362,RV0.0912,DH1.34,DV3.37
GS,PN237,N 802130.11754,E 779038.36632,EL1433.913,--IE
EP,TM17:49:23.00,LA33.121850863,LN-
111.393020114,HT1498.7394,RH0.0362,RV0.0910,DH1.34,DV3.37
GS,PN238,N 802160.50888,E 779039.21366,EL1436.975,--PAV
EP,TM17:50:31.00,LA33.121853952,LN-
111.392596814,HT1496.9113,RH0.0356,RV0.0892,DH1.33,DV3.34
GS,PN239,N 802164.51778,E 779398.87083,EL1435.157,--PAV
EP,TM17:51:4.00,LA33.121824148,LN-
111.392596321,HT1493.1916,RH0.0356,RV0.0888,DH1.33,DV3.33
GS,PN240,N 802134.39541,E 779399.36451,EL1431.437,--IE
EP,TM17:52:11.00,LA33.121827946,LN-
111.392190407,HT1492.0530,RH0.0350,RV0.0868,DH1.33,DV3.29
GS,PN241,N 802139.08895,E 779744.24798,EL1430.309,--IE
EP,TM17:52:50.00,LA33.121857569,LN-
111.392190676,HT1495.2727,RH0.0349,RV0.0863,DH1.32,DV3.27
GS,PN242,N 802169.02846,E 779743.94494,EL1433.529,--PAV
EP,TM18:39:59.00,LA33.120753217,LN-
111.380456511,HT1518.2604,RH0.0614,RV0.0517,DH1.18,DV1.96
GS,PN243,N 801069.83724,E 786318.42312,EL1456.694,--PAV
EP,TM18:43:7.00,LA33.120494201,LN-
111.374639857,HT1515.9573,RH0.0608,RV0.0510,DH1.17,DV1.95
GS,PN244,N 800812.23284,E 787862.74621,EL1454.433,--PAV
EP,TM18:44:35.00,LA33.120226035,LN-
111.372783571,HT1531.8539,RH0.0471,RV0.0786,DH1.16,DV1.94
GS,PN245,N 800545.54740,E 789440.79658,EL1470.372,--PAV
EP,TM18:57:3.00,LA33.103735068,LN-
111.345101579,HT1571.8641,RH0.0511,RV0.0821,DH1.08,DV1.74
GS,PN246,N 792003.52903,E 802793.41821,EL1510.658,--NG
EP,TM19: 0:37.00,LA33.103612385,LN-
111.345091090,HT1568.9872,RH0.0648,RV0.0534,DH1.08,DV1.73
GS,PN247,N 791879.56177,E 802802.72930,EL1507.780,--IE
EP,TM19: 0:53.00,LA33.103631550,LN-
111.345080250,HT1569.6227,RH0.0542,RV0.0447,DH1.08,DV1.73
GS,PN248,N 791898.96156,E 802811.88128,EL1508.416,--IE
EP,TM19: 1:6.00,LA33.103642491,LN-
111.345063802,HT1569.4714,RH0.0542,RV0.0447,DH1.08,DV1.73
GS,PN249,N 791910.06451,E 802825.82519,EL1508.265,--IE
EP,TM19: 1:24.00,LA33.103639891,LN-
111.345040917,HT1570.1147,RH0.0569,RV0.0471,DH1.08,DV1.73
GS,PN250,N 791907.49827,E 802845.28465,EL1508.909,--IE
EP,TM19: 8:6.00,LA33.101818745,LN-
111.342536510,HT1578.9188,RH0.0182,RV0.0289,DH1.07,DV1.70
GS,PN251,N 790073.74154,E 804979.89353,EL1517.751,--IE
EP,TM19: 8:44.00,LA33.101818797,LN-
111.342536589,HT1578.8779,RH0.0540,RV0.0857,DH1.07,DV1.70
GS,PN252,N 790073.79334,E 804979.82580,EL1517.710,--IE 2ND SHOT
EP,TM19: 9:24.00,LA33.101847738,LN-
111.342509145,HT1582.8839,RH0.0540,RV0.0856,DH1.07,DV1.70
GS,PN253,N 790103.12060,E 805003.05758,EL1521.717,--NG
EP,TM19:12:27.00,LA33.100427691,LN-
111.340820895,HT1586.2139,RH0.0563,RV0.0885,DH1.07,DV1.68
GS,PN254,N 788672.59510,E 806442.80309,EL1525.070,--IE
EP,TM19:13:18.00,LA33.100470197,LN-

```
111.340782127,HT1593.0379,RH0.0525,RV0.0472,DH1.07,DV1.67
GS,PN255,N 788715.66534,E 806475.61497,EL1531.896,--NG
EP,TM19:15:24.00,LA33.100030193,LN-
111.340396705,HT1590.2781,RH0.0622,RV0.0704,DH1.26,DV1.88
GS,PN256,N 788272.03911,E 806804.71028,EL1529.140,--NG
EP,TM19:16:47.00,LA33.095516572,LN-
111.335997656,HT1588.7150,RH0.0621,RV0.0725,DH1.26,DV1.90
GS,PN257,N 787754.04969,E 807145.64751,EL1527.580,--IE
EP,TM19:27:18.00,LA33.095495434,LN-
111.340032383,HT1590.2589,RH0.0612,RV0.0898,DH1.29,DV2.01
GS,PN258,N 787732.58732,E 807116.19898,EL1529.122,--SET 40 4.6 MI E
EP,TM19:27:27.00,LA33.095495465,LN-
111.340032358,HT1590.2482,RH0.0568,RV0.0887,DH1.29,DV2.01
GS,PN259,N 787732.61867,E 807116.21988,EL1529.112,--SET 40 4.6 MI E
EP,TM19:27:35.00,LA33.095495465,LN-
111.340032357,HT1590.2517,RH0.0612,RV0.0902,DH1.29,DV2.01
GS,PN260,N 787732.61870,E 807116.22065,EL1529.115,--SET 40 4.6 MI E
EP,TM19:30:48.00,LA33.095619980,LN-
111.335807230,HT1588.6560,RH0.0517,RV0.0874,DH1.30,DV2.05
GS,PN261,N 787859.10469,E 807307.16980,EL1527.527,--SET 40 4.6 MI E
EP,TM19:30:55.00,LA33.095619980,LN-
111.335807229,HT1588.6398,RH0.0605,RV0.0955,DH1.30,DV2.05
GS,PN262,N 787859.10392,E 807307.17053,EL1527.511,--SET 40 4.6 MI E
EP,TM19:31:2.00,LA33.095619972,LN-
111.335807227,HT1588.6432,RH0.0545,RV0.0829,DH1.23,DV1.88
GS,PN263,N 787859.09681,E 807307.17239,EL1527.514,--SET 40 4.6 MI E
EP,TM19:36:19.00,LA33.095495511,LN-
111.340032298,HT1590.2671,RH0.0199,RV0.0304,DH1.25,DV1.91
GS,PN258,N 787732.66490,E 807116.27055,EL1529.131,--SET 40 4.6 MI E
EP,TM19:37:1.00,LA33.095495513,LN-
111.340032294,HT1590.2642,RH0.0197,RV0.0301,DH1.25,DV1.91
GS,PN259,N 787732.66704,E 807116.27403,EL1529.128,--SET 40 4.6 MI E
EP,TM19:37:35.00,LA33.095495518,LN-
111.340032297,HT1590.2550,RH0.0200,RV0.0304,DH1.25,DV1.91
GS,PN260,N 787732.67244,E 807116.27202,EL1529.119,--SET 40 4.6 MI E
EP,TM19:39:24.00,LA33.095619978,LN-
111.335807309,HT1588.6348,RH0.0196,RV0.0299,DH1.25,DV1.91
GS,PN261,N 787859.10216,E 807307.10320,EL1527.506,--SET 40 4.6 MI E
EP,TM19:40:2.00,LA33.095619960,LN-
111.335807305,HT1588.6076,RH0.0197,RV0.0299,DH1.26,DV1.91
GS,PN262,N 787859.08448,E 807307.10645,EL1527.478,--SET 40 4.6 MI E
EP,TM19:40:36.00,LA33.095619963,LN-
111.335807302,HT1588.6031,RH0.0197,RV0.0300,DH1.26,DV1.92
GS,PN263,N 787859.08680,E 807307.10862,EL1527.474,--SET 40 4.6 MI E
EP,TM19:43:13.00,LA33.101069527,LN-
111.341439979,HT1585.9425,RH0.0197,RV0.0299,DH1.26,DV1.91
GS,PN264,N 789319.56192,E 805914.42821,EL1524.792,--NG
SP,PN265,N 787732.66300,E 807116.27000,EL1529.127,--SET 40 4.6 MI E
--Set BASE : record intrvl: OFF, elev cutoff: 15 deg, antenna ht: 4.790
--Moved Base receiver to Point 265
--16:20:26.52,Set Base receiver position
BP,PN265,LA33.095495509,LN-111.340032299,HT1590.2635
--Solved direct enter local transformation.
LH,PN265,Ha3.280702252,Hb-
0.008800701,Hc479926.114930640,Hd458782.367743475,SC0.999961644,RT-
0.091332
LV,PN265,Va0.000096213,Vb0.000043886,Vc-75.578245160,Ba33.095495509,Bo-
111.340032299,Bh1590.2635
--Set BASE : record intrvl: OFF, elev cutoff: 15 deg, antenna ht: 4.970
--Moved Base receiver to Point 265
```

```
--16:22:37.84,Set Base receiver position
BP,PN265,LA33.095495509,LN-111.340032299,HT1590.2635
--Solved direct enter local transformation.
LH,PN265,Ha3.280702252,Hb-
0.008800701,Hc479926.114930640,Hd458782.367743475,SC0.999961644,RT-
0.091332
LV,PN265,Va0.000096213,Vb0.000043886,Vc-75.578245160,Ba33.095495509,Bo-
111.340032299,Bh1590.2635
--Set BASE : record intrvl: OFF, elev cutoff: 15 deg, antenna ht: 4.970
--15:15:50.50,Get base position at BASE: LA33.095378310,LN-
111.340020214,HT1629.1667
--Set BASE : record intrvl: OFF, elev cutoff: 15 deg, antenna ht: 4.970
--Moved Base receiver to Point 265
--16:25:53.65,Set Base receiver position
BP,PN265,LA33.095495509,LN-111.340032300,HT1590.2635
--Solved direct enter local transformation.
LH,PN265,Ha3.280702252,Hb-
0.008800701,Hc479926.114930640,Hd458782.367743475,SC0.999961644,RT-
0.091332
LV,PN265,Va0.000096213,Vb0.000043886,Vc-75.578245160,Ba33.095495509,Bo-
111.340032300,Bh1590.2635
--Set ROVER: record intrvl: OFF, elev cutoff: 15 deg, antenna ht: 7.370
--Set ROVER: record intrvl: OFF, elev cutoff: 15 deg, antenna ht: 7.370
--Set BASE : record intrvl: OFF, elev cutoff: 15 deg, antenna ht: 4.970
--15:19:20.00,Get base position at BASE: LA33.095439318,LN-
111.335995866,HT1385.3839
--16:28:56.88,Set Base receiver position
BP,PN265,LA33.095439318,LN-111.335995866,HT1385.3839
LH,PN265,Ha3.280702252,Hb-
0.008800701,Hc479926.114930640,Hd458782.367743475,SC0.999961644,RT-
0.091332
LV,PN265,Va0.000096213,Vb0.000043886,Vc-75.578245160,Ba33.095439318,Bo-
111.335995866,Bh1385.3839
LH,PN258,Ha3.280702252,Hb-
0.008800701,Hc479926.114930640,Hd458782.367743475,SC0.999961644,RT-
0.091332
LV,PN258,Va0.000096213,Vb0.000043886,Vc-75.578245160,Ba33.095439318,Bo-
111.335995866,Bh1385.3839
LH,PN258,Ha3.280702252,Hb-
0.008800701,Hc479926.114930640,Hd458782.367743475,SC0.999961644,RT-
0.091332
LV,PN258,Va0.000096213,Vb0.000043886,Vc-75.578245160,Ba33.095439318,Bo-
111.335995866,Bh1385.3839
--16:40:15.38,Solve for local Horizontal transformation
HC,PN134,LA33.120750966,LN-111.380472950,HT1518.3825,--H,V
HC,PN130,LA33.124533354,LN-111.380460884,HT1477.9659,--H,V
HC,PN127,LA33.131149636,LN-111.380459936,HT1462.8346,--H,V
HC,PN124,LA33.125760540,LN-111.392258256,HT1455.0394,--H,V
HC,PN125,LA33.124496868,LN-111.390663354,HT1462.3524,--H,V
--16:40:17.30,Solve for local Vertical transformation
VC,PN134,LA33.120750966,LN-111.380472950,HT1518.3825,--H,V
VC,PN130,LA33.124533354,LN-111.380460884,HT1477.9659,--H,V
VC,PN127,LA33.131149636,LN-111.380459936,HT1462.8346,--H,V
VC,PN124,LA33.125760540,LN-111.392258256,HT1455.0394,--H,V
VC,PN125,LA33.124496868,LN-111.390663354,HT1462.3524,--H,V
LH,PN258,Ha3.280687712,Hb-
0.010936989,Hc480172.347853375,Hd458513.511393196,SC0.999959171,RT-
0.112763
LV,PN258,Va0.000096241,Vb0.000043824,Vc-75.142792087,Ba33.095439318,Bo-
111.335995866,Bh1385.3839
```

```
--Set BASE : record intrvl: OFF, elev cutoff: 15 deg, antenna ht: 4.970
--Moved Base receiver to Point 258
--16:41:14.64,Set Base receiver position
BP,PN258,LA33.095495503,LN-111.340032288,HT1590.2671
--Solved direct enter local transformation.
LH,PN258,Ha3.280687712,Hb-
0.010936989,Hc480141.198186523,Hd458570.194805080,SC0.999959171,RT-
0.112763
LV,PN258,Va0.000096241,Vb0.000043824,Vc-75.142792087,Ba33.095495503,Bo-
111.340032288,Bh1590.2671
--Set ROVER: record intrvl: OFF, elev cutoff: 15 deg, antenna ht: 7.370
--Send Base position to Rover:LA33.095495503,LN-
111.340032288,HT1590.2671
EP,TM15:45:10.00,LA33.095619994,LN-
111.335807250,HT1588.6211,RH0.0134,RV0.0199,DH1.06,DV1.57
GS,PN265,N 787859.12588,E 807307.14331,EL1527.492,--261 262 263
EP,TM15:45:41.00,LA33.095619992,LN-
111.335807258,HT1588.6235,RH0.0134,RV0.0198,DH1.06,DV1.57
GS,PN266,N 787859.12396,E 807307.13715,EL1527.494,--261 262 263
EP,TM15:46:8.00,LA33.095619988,LN-
111.335807228,HT1588.6263,RH0.0135,RV0.0199,DH1.06,DV1.56
GS,PN267,N 787859.11970,E 807307.16234,EL1527.497,--261 262 263
EP,TM16:17:12.00,LA33.120952242,LN-
111.380650080,HT1516.7382,RH0.0181,RV0.0200,DH1.59,DV1.76
GS,PN268,N 801270.53262,E 786153.39551,EL1455.170,--BASE 1
EP,TM16:18:35.00,LA33.120952225,LN-
111.380650077,HT1516.7262,RH0.0179,RV0.0198,DH1.58,DV1.77
GS,PN269,N 801270.51499,E 786153.39861,EL1455.158,--BASE 1
EP,TM16:19:42.00,LA33.120952222,LN-
111.380650077,HT1516.7268,RH0.0179,RV0.0200,DH1.57,DV1.77
GS,PN270,N 801270.51201,E 786153.39857,EL1455.159,--BASE 1
EP,TM16:42:12.00,LA33.095535516,LN-
111.335962898,HT1592.3227,RH0.0479,RV0.0687,DH1.37,DV1.97
GS,PN271,N 787773.30298,E 807175.12084,EL1531.189,--NG
EP,TM16:42:44.00,LA33.095535655,LN-
111.335962941,HT1592.3209,RH0.0712,RV0.0729,DH1.37,DV1.97
GS,PN272,N 787773.44269,E 807175.08357,EL1531.187,--NG
-- *** Coordinate File converted into nonseq. file ***
EP,TM16:49:24.00,LA33.094833688,LN-
111.335344014,HT1590.2226,RH0.0683,RV0.0763,DH1.31,DV2.06
GS,PN272,N 787065.72326,E 807703.57954,EL1529.094,--NG
EP,TM16:50:24.00,LA33.094121683,LN-
111.334716627,HT1592.7783,RH0.0493,RV0.0786,DH1.30,DV2.08
GS,PN273,N 786347.89100,E 808239.32524,EL1531.656,--NG
EP,TM16:52:1.00,LA33.092548682,LN-
111.333336531,HT1587.2754,RH0.0672,RV0.0780,DH1.29,DV2.10
GS,PN274,N 784762.03282,E 809417.93892,EL1526.167,--NG
EP,TM16:53:55.00,LA33.090425245,LN-
111.331465754,HT1580.5420,RH0.0665,RV0.0793,DH1.28,DV2.14
GS,PN275,N 782621.33189,E 811015.75261,EL1519.451,--NG
EP,TM16:55:11.00,LA33.085031705,LN-
111.330244202,HT1578.1166,RH0.0660,RV0.0803,DH1.27,DV2.16
GS,PN276,N 781216.48806,E 812059.20829,EL1517.037,--NG
EP,TM17: 0:23.00,LA33.072510234,LN-
111.314696478,HT1578.6921,RH0.0621,RV0.0796,DH1.21,DV2.10
GS,PN277,N 772626.90183,E 818508.18917,EL1517.686,--NG
EP,TM17: 2:1.00,LA33.070753470,LN-
111.313100908,HT1577.5746,RH0.0707,RV0.0931,DH1.21,DV2.15
GS,PN278,N 770856.38592,E 819871.75804,EL1516.585,--NG
EP,TM17:12:58.00,LA33.063632023,LN-
```

111.310263439,HT1592.6047,RH0.0426,RV0.0974,DH1.24,DV2.84
GS,PN279,N 767710.66015,E 822297.00764,EL1531.644,--NG
EP,TM17:15:42.00,LA33.061985473,LN-
111.304757464,HT1601.3394,RH0.0409,RV0.0984,DH1.25,DV3.01
GS,PN280,N 766051.40780,E 823584.35132,EL1540.394,--NG
EP,TM17:52:0.00,LA33.103238186,LN-
111.322854471,HT1552.3601,RH0.0370,RV0.0894,DH1.30,DV3.14
GS,PN281,N 791542.35502,E 814904.34213,EL1491.503,--IE WB
EP,TM17:52:28.00,LA33.103234416,LN-
111.322851112,HT1551.7122,RH0.0369,RV0.0888,DH1.30,DV3.12
GS,PN282,N 791538.55512,E 814907.21050,EL1490.855,--IE WB
EP,TM17:53:27.00,LA33.103227129,LN-
111.322844797,HT1551.5957,RH0.0367,RV0.0874,DH1.29,DV3.07
GS,PN283,N 791531.20899,E 814912.60441,EL1490.739,--IE WB
EP,TM17:54:9.00,LA33.103224316,LN-
111.322841435,HT1552.4151,RH0.0366,RV0.0864,DH1.28,DV3.03
GS,PN284,N 791528.37630,E 814915.47248,EL1491.558,--IE WB
EP,TM18:10:14.00,LA33.110313231,LN-
111.325810002,HT1548.1373,RH0.0583,RV0.0648,DH1.11,DV1.88
GS,PN285,N 794641.43044,E 812381.41859,EL1487.248,--IE CMP
EP,TM18:15:29.00,LA33.112613298,LN-
111.332012610,HT1543.0128,RH0.0582,RV0.0612,DH1.11,DV1.88
GS,PN286,N 796959.62827,E 810501.49708,EL1482.100,--IE CMP
EP,TM18:15:49.00,LA33.112620564,LN-
111.332019319,HT1542.7526,RH0.0568,RV0.0963,DH1.11,DV1.88
GS,PN287,N 796966.95249,E 810495.77000,EL1481.840,--IE CMP
EP,TM18:20:14.00,LA33.112812391,LN-
111.332199225,HT1545.1942,RH0.0569,RV0.0961,DH1.10,DV1.87
GS,PN288,N 797160.30818,E 810342.21908,EL1484.279,--IE CMP
EP,TM18:20:26.00,LA33.112806098,LN-
111.332192916,HT1545.3201,RH0.0569,RV0.0960,DH1.10,DV1.87
GS,PN289,N 797153.96539,E 810347.60215,EL1484.405,--IE CMP
EP,TM18:20:35.00,LA33.112800272,LN-
111.332186394,HT1545.3323,RH0.0596,RV0.0594,DH1.10,DV1.87
GS,PN290,N 797148.09602,E 810353.16502,EL1484.417,--IE CMP
EP,TM18:20:46.00,LA33.112793640,LN-
111.332180146,HT1544.8380,RH0.0578,RV0.0575,DH1.10,DV1.86
GS,PN291,N 797141.41131,E 810358.49727,EL1483.923,--IE CMP
EP,TM18:41:28.00,LA33.112825208,LN-
111.332139706,HT1544.7311,RH0.0599,RV0.0999,DH1.16,DV1.94
GS,PN292,N 797173.43578,E 810392.75408,EL1483.818,--IE CMP
EP,TM18:41:39.00,LA33.112819157,LN-
111.332134579,HT1544.8681,RH0.0599,RV0.0999,DH1.16,DV1.94
GS,PN293,N 797167.33470,E 810397.13127,EL1483.955,--IE CMP
EP,TM18:41:49.00,LA33.112813066,LN-
111.332128231,HT1544.6863,RH0.0603,RV0.0506,DH1.16,DV1.94
GS,PN294,N 797161.19748,E 810402.54711,EL1483.773,--IE CMP
EP,TM18:42:5.00,LA33.112806799,LN-
111.332122038,HT1544.9345,RH0.0603,RV0.0506,DH1.16,DV1.94
GS,PN295,N 797154.88138,E 810407.83190,EL1484.021,--IE CMP
EP,TM18:44:52.00,LA33.112650836,LN-
111.331974352,HT1543.7598,RH0.0593,RV0.0986,DH1.15,DV1.92
GS,PN296,N 796997.67954,E 810533.87790,EL1482.848,--IE CMP
EP,TM18:45:23.00,LA33.112643376,LN-
111.331967109,HT1543.6380,RH0.0592,RV0.0984,DH1.15,DV1.92
GS,PN297,N 796990.16163,E 810540.05914,EL1482.727,--IE CMP
EP,TM18:49:59.00,LA33.110341515,LN-
111.325767028,HT1548.7613,RH0.0588,RV0.0503,DH1.15,DV1.89
GS,PN298,N 794670.14545,E 812417.84067,EL1487.874,--IE CMP
EP,TM18:58:7.00,LA33.103245863,LN-

```
111.322817768,HT1552.0429,RH0.0532,RV0.0854,DH1.08,DV1.73
GS,PN299,N 791550.22602,E 814935.51006,EL1491.187,--IE CMP
EP,TM18:58:45.00,LA33.103242947,LN-
111.322814161,HT1552.7900,RH0.0532,RV0.0853,DH1.08,DV1.73
GS,PN300,N 791547.28913,E 814938.58676,EL1491.934,--IE WB
EP,TM18:59:55.00,LA33.103255963,LN-
111.322827623,HT1552.3295,RH0.0555,RV0.0859,DH1.08,DV1.72
GS,PN301,N 791560.40381,E 814927.09744,EL1491.473,--IE WB
EP,TM19: 2:31.00,LA33.103252641,LN-
111.322824382,HT1552.1415,RH0.0608,RV0.0550,DH1.13,DV1.78
GS,PN302,N 791557.05598,E 814929.86394,EL1491.286,--IE WB
```

AVERY

Collins/Pina
Consulting Engineers, Inc.
Tucson, Arizona 85705
Phone (520) 623-7980
FAX (520) 884-5278
Phoenix, Arizona 85
Phone
FAX

LEVELS

Job No. _____ Sht. 1 of _____
Project SONOKAI WASH
RIGGS - ELLSWORTH WEST TO HAWES
Calc. _____ Chk. _____ B'chk. _____
Date 10-27-97 Date _____ Date _____

BS	HI	FS	IFS	ELEV	DESCRIPTION
2.24				~~1403.73~~ 1401.50	BC IN HH RIGGS + ELLSWO
3.785		6.28			⊙
0.47		5.57			PVMT @ AP SE COR DUMP (SE
6.04		9.39			⊙ TIRE DISPO
4.02	1390.34	6.475		7	⊙
7.39		6.72		~~1385.820~~ ~~1383.62~~	AP123 HAWES RD ~1000' N. OF R.
4.97		3.99			⊙ 1383.64
7.525		2.685			⊙
6.10		2.20			⊙
6.36		3.485			⊙
7.145	1404.97	3.78		1401.50 ~~1401.46~~	⊙
		5.51		~~1403.19~~ 73	BC IN HH RIGGS + ELLSWORT
(56.045)		(56.085)	4.99	~~1404.25~~	AP121 (PVMT @ BC)
				~~1401.98~~	1402.02

HAWES RD - RIGGS NORTH TO CHANDLER HEIGHTS

BS	HI	FS	IFS	ELEV	DESCRIPTION
7.135	1393.005		1383.64	~~1385.87~~	AP 123
7.72	1397.020	3.705		~~1389.30~~ 1387.07	⊙*
4.91	~~1398.195~~	3.735			⊙
	1395.945	2.79		~~1395.405~~ ~~1393.195~~	AP122 1393.155
4.46	1393.76				⊙*
5.66	~~1394.555~~ 1392.325	4.865		845	⊙
			5.69	~~1388.865~~ ~~1386.695~~	AP121 1386.605
4.79		9.66		77	⊙ IN TRAILER PARK
7.75		5.89		~~1383.795~~ ~~1381.565~~	AP120 1381.535
5.725		2.40			⊙
4.02		4.8315	1383.64	87	⊙
		8.13	1383.695	~~1385.925~~	AP123

WEST ON CHANLER HEIGHTS FROM HAWES TO SOSSAMAN

BS	HI	FS	IFS	ELEV	DESCRIPTION
5.76				~~1383.77~~ 1381.535	AP 120
3.59		7.98			⊙
0.12		7.24			⊙
4.06	~~1376.695~~ 1374.485	5.36		~~1368.815~~	⊙ 1368.79
			5.67	~~1371.825~~	AP114 PVMT @ HH SOS
7.04		6.13		~~1370.59~~ 565	BC IN HH CHANDLER HTS E. OF
6.74		4.30		~~1368.355~~	⊙ 1368.33
6.78		1.06			⊙
8.89		5.00		77	⊙
		5.86		~~1383.82~~ 1381.585	AP120
(42.98)		(42.93)			

Collins/Pina
Consulting Engineers, Inc.

630 East 9th Street
Tucson, Arizona 85705
Phone (520) 623-7980
FAX (520) 884-5278

3800 N. Central, Suite
Phoenix, Arizona 85
Phone (602) 264-75
FAX (602) 264-07

Project SONOKAI WASH

Job No. _____ Sht. 1 of 1
Calc. _____ Chk. _____ B'chk. _____
Date 10-30-97 Date _____ Date _____

CHANDLER HEIGHTS RD FROM SOSSAMAN WEST TO POWER

BS	HI	FS	IFS	ELEV	DESC
2.05				~~1370.565~~ 1368.33	BC IN HH CHNDLR HTS. 75'± E OF SOSSA
3.44		7.13			⊙ 1360.105
4.42		6.58		~~1362.315~~ 1360.11	BC IN HH 188TH + CHNDLR HTS (1/4
3.32		7.50		~~1359.265~~ 1357.93	AP 113 1357.025
7.79		7.64		~~1354.945~~ 1352.71	REBAR IN HH POWER CHNDLR
6.96		2.83			⊙ 1352.705
6.08		3.36			⊙
7.51		3.74			⊙
		2.78		~~1370.575~~ 1368.34	BC IN HH CHNDLR HTS 75'± E OF SOSS.
(41.57)		(41.56)			

N. ON POWER FROM CHNDLR HGTS TO BROOKS FARMS

BS	HI	FS	IFS	ELEV	DESC
5.72 (4)				~~1370.57~~ 1352.71	REBAR IN HH POWER + CHNDLR HTS
5.04 (6)		5.58			⊙
6.37 (8)		6.54		~~1369.24~~ ~~1351.35~~	REBAR IN HH BROOKS FARMS + POW
5.64	1358.45	4.91 (2)			⊙ 1351.34
		5.72 (8)			REBAR IN HH PWR + CHANDLER H
(22.77)		(22.76)	1352.73	~~1370.57~~ 57	REBAR IN HH POWER + CHNDLR HT

BROOKS FARMS RD FROM POWER WEST TO 182ND ST

1.75 (6)				~~1369.20~~ 1351.34	REBAR IN HH BROOKS FMS + POW
2.16 (4)		5.93 (4)			⊙
7.29 (8)		7.51 (8)		~~1359.67~~ 1341.81	AP 214 BROOKS FARMS + 182ND ST
6.07		1.78			⊙
		2.05 (6)		~~1369.20~~ 1351.34	REBAR IN HH BRK'S FMS + POWER
(17.27)		(17.27)			

Project SONOKAI WASH

11-18-97

LEVELS BROOKS FARMS RD FROM 182ND ST. WEST TO END BROOKS FARM

BS	HI	FS	IFS	ELEV	DESCRIPTION
1.79			1341.81	~~1359.67~~	AP 214
4.26		7.76(7)			⊙
3.48(7)		7.65(6)		~~1350.31~~ 2	AP 213 1332.44
2.34(6)		7.64(3)		~~1332.45~~	⊙ H_2O METER
6.75(4)		5.48	~~1325.15~~	~~1343.01~~	⊙ IRR. DITCH @ CTR SEC 23
7.10(4)	1339.55	3.78	1325.13	1342.99	⊙ REBAR w/CAP
6.59(8)	~~1357.41~~	2.26(7)		~~1332.47~~	⊙ @ RECKER + BROOKS FARMS
			708(9)	~~1350.33~~	AP 213 2ND TIE 1332.44
7.67(8)		3.17			⊙ SET NUB
		2.20		~~1359.71~~	AP 214
(39.98)		(39.94)		1341.85	

END BROOKS FARMS @ CTR SEC 23 WEST ON ROAD THROUGH COTTON FIELD TO HIGLEY

BS	HI	FS	IFS	ELEV	DESC
3.82	~~1346.81~~ 1328.95		1325.13	~~1342.99~~	⊙ IRR DITCH @ CTR SEC 23
			3.46	~~1343.35~~	AP 205 1325.49
			4.10	~~1342.71~~ 1324.85	REBAR w/LATH "CENTER SECTIO
4.56		6.44			⊙ IRR DITCH
4.65		8.10			⊙ " "
6.46		6.09		~~1335.38~~ 8 ~~1317.53~~	AP 204 LID WELL MON 1317.52
6.76		3.16			⊙ IRR DITCH
(26.25)		2.44		~~1343.01~~	⊙ IRR DITCH @ CTR SEC 23
		(26.23)		1325.15	
3.74	~~1341.12~~ 1323.26		1317.52	~~1335.38~~	AP 204 LID WELL MON
			6.91 1316.35	~~1334.71~~	BC IN HH ON HIGLEY W ¼ SEC 2
4.33	1339.07	6.38		1334.74	⊙ E EP HIGLEY
5.14	~~1339.11~~ 1321.25	5.10	~~1316.11~~	~~1333.97~~	AP 203 1316.103
			4.48 ~~1316.99~~	~~1334.63~~	AP 202 LID WELL MON 1316.76
			5.46 ~~1315.79~~	~~1333.65~~ 1315.783	BC IN HH NW COR SEC 23 ON HIG
3.26	1338.93	3.44	1317.80 ~~1317.31~~	~~1335.67~~ 76	AP 201 ~600' N OF NON EXISTANT OCOTILLO RD ON HIG
5.47(6)	1339.45	4.95	~~1316.16~~	~~1333.98~~	AP 203 2ND TIE 1316.107
5.30	1340.22	4.53(4)		1334.92	⊙ W EP HIGLEY
		4.82(1)		~~1335.40~~	AP 204 LID
(29.24)		(29.22)		1317.54	

Collins/Pina
Consulting Engineers
130 East 8th Street
Tempe, Arizona 85281
3800 N. Central, Suite 2
Phoenix, Arizona 850
Phone (602) 264-7506

Project SONOKAI WASH
GARY + IAN

11-19-97

LEVELS ON POWER RD FROM BROOKS FARMS NORTH TO 1/2 MILE SOUTH OF QUEEN CREEK

BS	HI	FS	IFS	ELEV	DESC
5.10	1374.30		1351.34	~~1369.20~~	REBAR IN HH BROOKS FARMS + Pe
			4.46	~~1369.84~~ 1351.98	AP 107 - HH RIM
6.96(~~8~~)	1375.62	5.64(~~3~~)			⊙ E EP POWER @ DIP
			5.51	~~1370.11~~ * ~~1352.25~~	BC IN HH OCOTILLO + POWER 1352.244
4.07	1373.79	5.90			⊙ E EP POWER
			3.60	~~1370.19~~ * ~~1363.98~~ 3	AP 105 ~~1352.33~~ 1352.319
8.22	1372.17	9.84			1346.09 BC IN HH 1/2 MI S OF CK
			7.81	~~1364.36~~ 4	RIM AP 100 1346.50
6.38(~~8~~)	1375.00	3.55			⊙ W EP POWER
			4.84	~~1352.30~~ ~~1370.16~~ *	AP 105 1352.277
			4.84	~~1352.30~~ ~~1370.16~~ *	BC IN HH OCOTILLO + POWER 1352.277
3.51(~~2~~)	1373.02	5.49(50)		1369.51	⊙ W EP POWER N. END DIP
4.22(~~3~~)		4.05	~~1351.11~~	~~1368.97~~ 3	AP 106 1351.076
(38.46)		3.95(4)		~~1369.24~~ 0	REBAR IN HH BROOKS FARMS + Pu
		(38.42)		1351.38	

* ELEVATIONS NOT ADJUSTED

TRANSFER EL'S FROM BRENNAN'S LEVEL RUNS TO OUR PANELS

BS	HI	FS	IFS	ELEV.	DESC
4.98	1423.865		1416.655	~~1418.885~~	BC IN HH SANTAN BLVD + ELLSWO
			4.44	~~1419.425~~	RIM AP 130
				1417.195	
10.87			1441.20	~~1443.43~~	N. RIM HH EMPIRE BLVD + ELLSWORT
10.20		1.36			⊙ W EP ELLSWORTH
2.815		3.94	1456.983	~~1456.97~~ ~~1459.20~~ 1	AP 134 HUNT HWY + ELLSWORT
2.87		11.54			⊙ W EP ELLSWORTH
(26.755)		9.94		~~1443.40~~	N RIM HH EMPIRE BLVD + ELLSWO
		(26.78)		1441.175	
7.37	1450.80		1441.20	~~1443.43~~	N RIM HH " " "
4.26	1451.77	3.29	1445.28	~~1447.51~~	AP 133 1445.275 1/4 MI EAST OF INTER
		8.33	1441.21	1443.44	N RIM HH EMPIRE BLVD + ELLSWO

FINISH LAST AP ON HIGLEY FROM YESTERDAY

BS	HI	FS	IFS	ELEV	DESC
9.57			1317.80	~~1335.66~~	AP 201 ~600' N OF NON EXISTANT OCOTILLO RD ON HIGLE
5.73(4)		2.03			⊙ E EP HIGLEY
			4.24	~~1344.69~~ 8	AP 200 - PVMT @ HH ~~1326.83~~ 1326
4.55		5.05		1343.887	BC IN HH ~~1320.02~~ 1326.01
1.43		5.44(5)			⊙ W, EP HIGLEY
(21.28)		8.74		~~1335.68~~	AP 201
		(21.26)		1317.82	

11-4-97

SONOKAI WASH

SET-UP RTK ASHTECH GPS RECEIVERS

11/4/97

1) PICK ARBITRARY POINT #1, ASSIGN LOCAL VALUE N 5000, E 5000, EL 137.

2) HI = 4.86, ROVER HI = 6.67

3) GET & SET BASE RECEIVER OK ✓, TRANSMITTING

4) SET ROVER, RECEIVING OK ✓

5) OPTION D = LOCALIZATION (GPS SET-UP)

USED PREVIOUS PANELS FROM QUEEN CREEK FLOOD DELINEATI

NOS 1016, 1017, G68 TRI-STATION & NW SEC 10

6) DOCUMENTED, SOLVED, RESIDUAL VALUES 6.00 (11-5-97) NOT GOOD, SCALE = 1.00007

7) ACCEPT FOR NOW

8) TIE NEW PANELS

Ring Pt 133 127, 130, 133, 134, 129, 126, 125, 124

END OF DAY

11/5/97

1) PICK ARBITRARY POINT, (SAME AS ABOVE)

2) HI = 4.89, ROVER HI = 6.67

3) GET & SET BASE RECEIVER

4) SET ROVER, RECEIVING OK

5) OPTION D ⇒ SAME AS ABOVE, INCLUDING TO EL[illegible]

6) SAME AS ABOVE RESIDUAL VALUE .05/.02 SCALE = 0.999925

7) ACCEPT FOR NOW

8) TIE NEW PANELS

127, 130, 131, 133, 132, 134, 129, 128, 126, 125, 124, 123, 117, 119

119, 22, 121

11/6/97

1) PICK ARBITRARY POINT, SAME AS ABOVE

2) HI = 4.91 ROVER HI = 6.67

3) GET & SET BASE RECEIVER

4) SET ROVER RECEIVING OK

5) OPTION D, SAME AS ABOVE

6) RESIDUAL VALUES GOOD, SCALE = .999897

7) ACCEPT

8) TIE PANELS 121 & 125 ⇒ COMPARE TO PREVIOUS DAY CHECKS OK, MAKE ADJUSTMENT (SCALE) LATER TO MATCH PREVIOUS DAY

9) TIE NEW PANELS: 120, 114, 116, 113, 110, 111, 115, 112, 107
106, 109, 105, 100, 101, 104 LATE, 102, 215, 209, 210, 212, 211
201, 202, 200, 208, 203, 207, 204, 213

Collins/Pitts Consulting Engineers
3600 N. Central Avenue, Suite 200
Phoenix, AZ 85012

SONOKAI WASH
TRAVERSE SOUTH TO NORTH ON ELLSWORTH RD 12-4-97

AP 130 ELEV. = 100.00
+ 5.90
HI = 105.90
- 14.96
ROD H = - 6.15

T@ AP 130 BC IN HH SANTAN + ELLSWORTH HI 5.90

BS AP 134 PK @ HUNT HWY + ELLSWORTH HP 4.68
HD 3823.410 3823.410
VD +38.895 +38.64 +38.77

AP 127 ELEV. = 84.79
+ 5.99
HI = 90.78
- 1.02
ROD H. = - 4.85

FS AP 127 BC IN HH RIGGS + ELLSWORTH HP 6.15
∡1 179-51-45 HD 2644.600 2644.600 (2644.59)
∡2 359-43-30 VD -14.82 -15.095
MPV 179-51-45 -14.96

SET PK NAIL ELEV. = 84.91
+ 5.40
HI = 90.31
- 1.57
ROD H. = - 4.85

T@ AP 127 HI = 5.99
BS AP 130 HP = 5.68
HD 2644.580 2644.580
VD +14.77 + 14.46 +14.62

60D NAIL ELEV. = 83.89
+ 5.33
HI = 89.22
- 0.17
- 4.85
AP 1016 ELEV. = 84.20

HI = 89.22
+ 0.56
ROD H. = - 4.85
AP 1017 ELEV. = 84.93

FS SET PK WEST EP @ CLOUD + ELLSWORTH HP = 4.85
∡1 179-43-00 HD (2667.850) 2667.860
∡2 359-26-05 VD - 0.83 -1.205
MPV 179-43-03 -1.02

T@ SET PK @ CLOUD + ELLSWORTH WEST EP N. SIDE INTERSECTION HI 5.40
BS AP 127 HP = 5.36
HD 2667.85 2667.85
VD -.505 -.795 -0.65

FS FD 60D NAIL 6'E OF E EP N SIDE CHANDLER HTS + ELLSWORTH HP 4.85
∡1 180-52-05 HD 2638.430 2638.425 (2638.42)
∡2 01-44-00 VD -1.365 -1.770
MPV 180-52-00 -1.57

T@ FD 60D ~~HP~~ H.I. = 5.33
BS SET PK HP = 4.97
HD 2638.415 2638.415
VD +.495 +.32

FS AP 1017 PK @ ELLSWORTH S. OF QUEEN CREEK BRIDGE HP 4.85
∡1 178-46-20 HD 2075.705 (2075.70)
∡2 357-32-40 VD +1.60 +.525
MPV 178 46-20

FS 1016 PK @ ELLSWORTH N. OF QUEEN CREEK BRIDGE HP 4.85
∡1 178-51-30 HD 2673.455 (2673.46)
∡2 357-43-00 VD -0.02 -0.31
MPV 178-51-30

33 North Stone Avenue
Tucson, Arizona 85701
phone 520.623.7980
fax 520.884.6279

40 E. Virginia Ave. Suite 200
Phoenix, Arizona 85004
phone 602.264.7505
fax 602.264.0566

270 West View Point Dr
Nogales, Arizona 85621
phone 520.281.[illegible]
fax 520.281.[illegible]

SONOKAI WASH

Job No. 3905 Sht. 1 of 2
Calc. CW Chk. Chk.
Date 01/27/98 Date Date

BEGINNING WITH THE FURTHEST NORTH & PROCEEDING SOUTHEAST ALONG R.R.

① 4 ARCH CMP
DESCRIPTOR CODE = IECMP
SHOTS TAKEN @ ℄ OF PIPE ON INV. - BOTH ENDS OF PIPE
EAST SIDE OF PIPES INCLUDED A POURED IN PLACE CONCRETE HEADWALL WITH STEEL REINFORCIN
PIPE RUNS AT A SKEW WITH R.R. ALIGNMENT

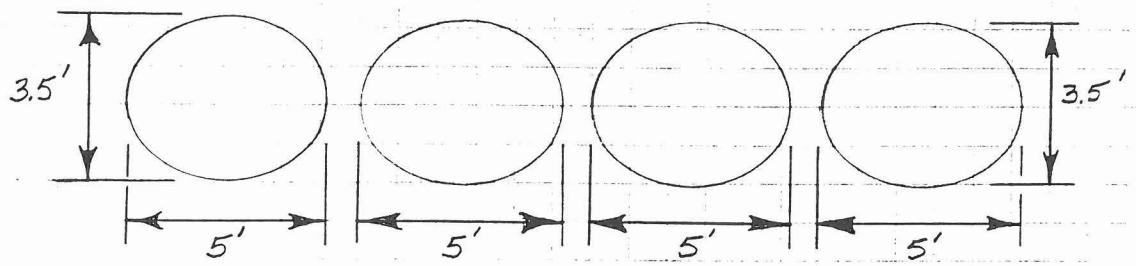

E	1483.82	1483.96	1483.77	1484.02
℄ = W	1484.28	1484.41	1484.42	1483.92

② 2 ARCH CMP
DESCRIPTOR CODE = IECMP
SHOTS TAKEN @ ℄ OF PIPE ON INV. - BOTH ENDS OF PIPE
PIPES RUN PERPENDICULAR TO R.R. ALIGNMENT

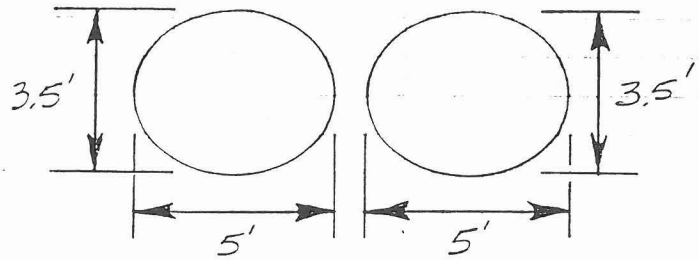

E	1482.85	1482.73
℄ = W	1481.84	1482.10

Engineering
53 North Stone Avenue
Tucson, Arizona 85701
Phone: (520) 622 7986
Fax: 620.624.1279
40 E. Virginia Ave, Suite 200
Phoenix, Arizona 85004
Phone: 602.264.7506
Fax: 602.264.3561
270 West View Point Dr.
Nogales, Arizona 85621
Phone: 602.281.2916
Fax: 602.281.2916

Job No. 3905 Sht. 2 of 2
Project SONOKAI WASH Calc. CK Chk. Bch.
Date 01/27/98 Rev. Date

③ SINGLE ARCH CMP
DESCRIPTOR CODE = IECMP
SHOTS TAKEN @ ℄ OF PIPE ON INV. – BOTH END OF PIPE
PIPES RUN PERPENDICULAR TO R.R. ALIGNMENT

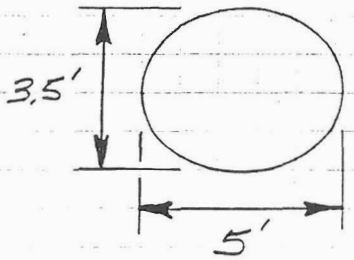

E 1487.87
℄ = W 1487.25

④ WOOD BOX CULVERTS
DESCRIPTOR CODES = IEWB
SHOTS TAKEN @ ℄ ON INV. – BOTH ENDS
BOX ALIGNMENT RUNS PERPENDICULAR TO R.R. ALIGNMENT

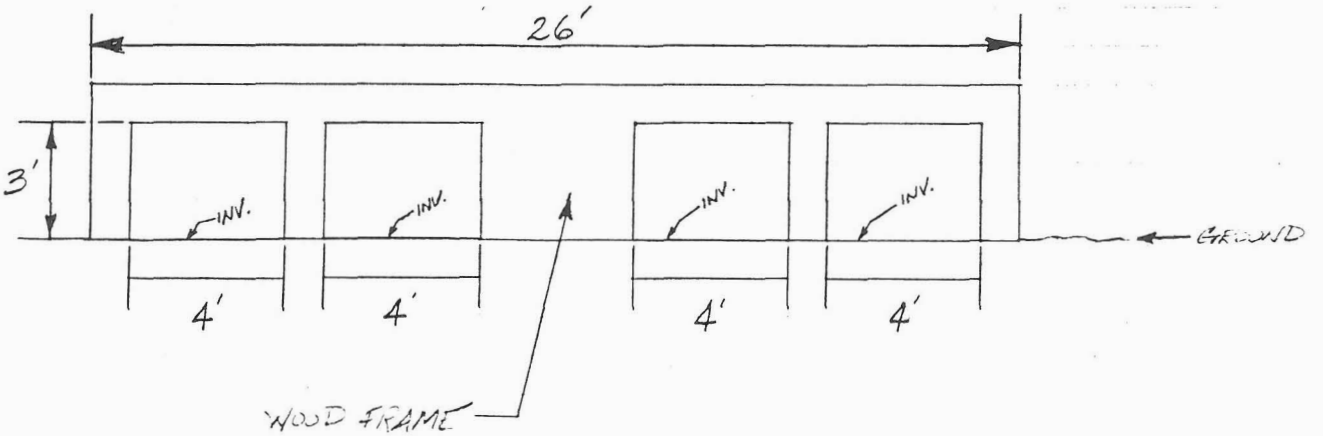

E	1491.47	1491.29	1491.19	1491.93
℄ = W	1491.50	1490.86	1490.74	1491.56

AVERY

Engineering
Planning • Surveying
Landscape Architecture

33 North Stone Avenue
Tucson, Arizona 85701
phone 520.623.7980
fax 520.884.5278

40 E. Virginia Ave, Suite 200
Phoenix, Arizona 85004
phone 602.264.7505
fax 602.264.0569

270 West View Point Dr
Nogales, Arizona
phone 520.281.
fax 520.281.

Job No. 3905 Sht. 1 of 3
Calc. CH Chk. Ch'chk.
Date 12-08-97 Date Date

SONOKAI WASH

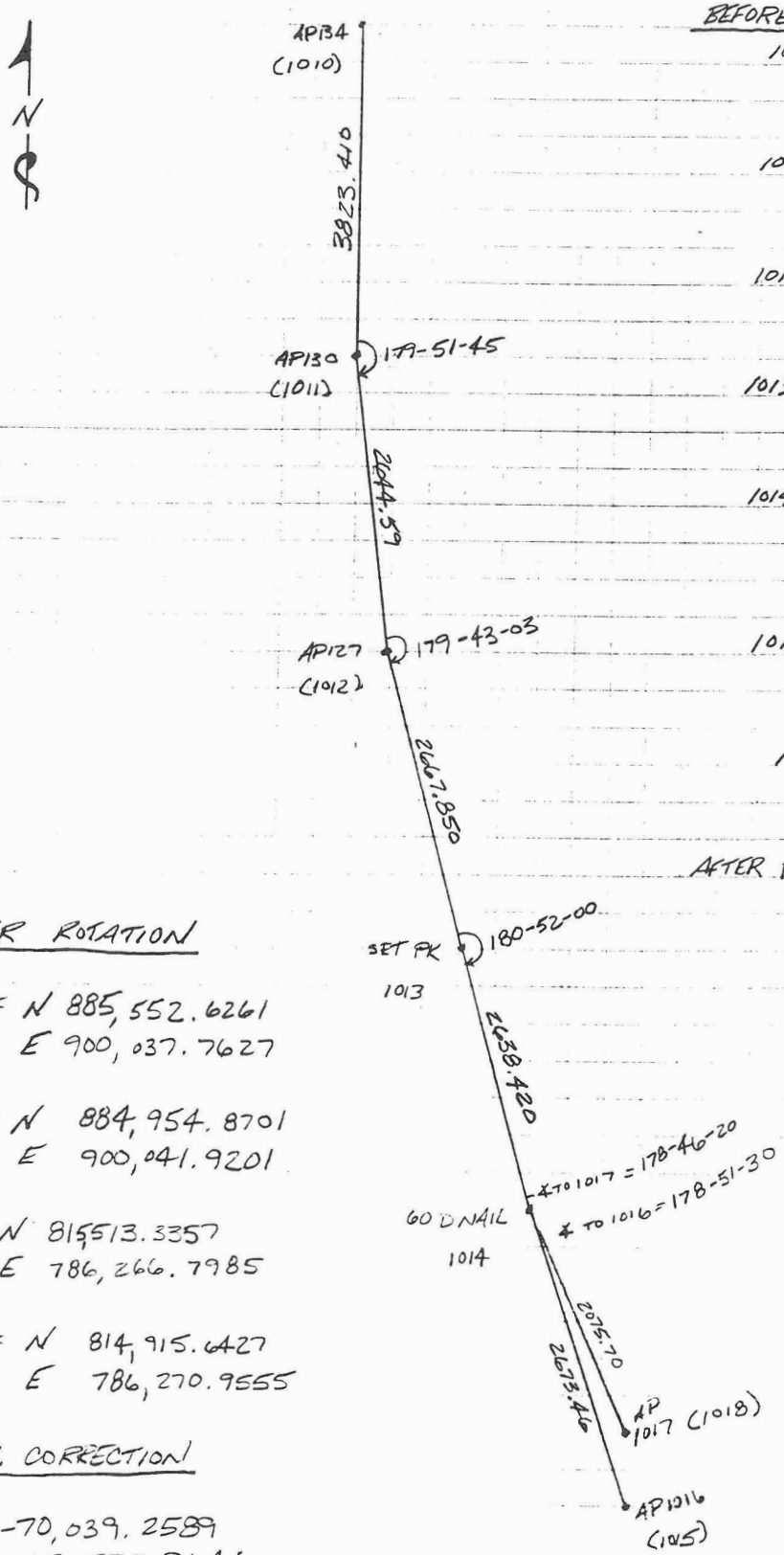

BEFORE TRANSITION

1010 = N 900,000.0000
E 900,000.0000

1011 = N 896,176.5900
E 900,000

1012 = N 893,532.0076
E 900,006.3466

1013 = N 890,864.2293
E 900,025.9027

1014 = N 888,225.8895
E 900,005.3343

1015 = N 885,552.6261
E 900,037.7627

1018 = N 886,150.3824
E 900,033.6314

AFTER ROTATION → 1015 → 1016
N -70,039.2904
E -113,770.9642

1018 - 1017
N -70,039.2274
E -113,770.9646

AFTER ROTATION

1015 = N 885,552.6261
E 900,037.7627

1018 = N 884,954.8701
E 900,041.9201

1016 = N 815513.3357
E 786,266.7985

1017 = N 814,915.6427
E 786,270.9555

COOR. CORRECTION

N = -70,039.2589
E = -113,770.9644

INVERS 1016 TO 1017
AZ = 179-36-05
DIST = 597.707
BEARING = S 00-23-55 E

INVERS 1015 TO 1018
AZ = 359-36-14
DIST = 597.770
BEARING = N 00-23-46 W

Engineering
36 North Stone Avenue
Tucson, Arizona 85701
phone 520.623.7900
Nogales, Arizona
phone 520.3...

Job No. 3905 Sheet 2 of 3
Calc. CLL
Date 12-08-97

SONOKAI WASH

COORDINATES AFTER TRANSITION

1010 = N 871,105.2540
E 900076.1558

1011 = N 874,928.6640
E 900075.9890

1012 = N 877,573.2461
E 900069.5271

1013 = N 880,241.0235
E 900049.8545

1014 = N 882,879.3642
E 900070.3077

1015 = N 885,552.6261
E 900,037.7627

1018 = N 884,954.8701
E 900,041.9201

1016 = N 815,513.3357 ELEV. = 1401.2600
E 786,266.7985

1017 = N 814,915.6427 ELEV. = 1401.8600
E 786,270.9555

CORRECTION FACTOR

N = -70,039.2589
E = -113,770.9644

NEXT PAGE

Engineering
Planning • Surveying
Landscape Architecture

33 North Stone Avenue
Tucson, Arizona 85701
phone 520.623.7980
fax 520.884.5278

40 E. Virginia Ave, Suite 200
Phoenix, Arizona 85004
phone 602.264.7505
fax 602.264.0568

270 West View Point Dr.
Nogales, Arizona 8563
phone 520.281.2769
fax 520.6[illegible]

Job No. 3905 Sht. 3 of 3
Calc. BLL Chk. Bkng.
Date 12-08-97 Date Date

SONOKAI WASH

AFTER ROTATION & CORRECTION FACTOR ADJUSTMENTS

AP 134 (1010) = N 801,065.9951
E 786,305.1914

AP 130 (1011) = N 804,889.4051
E 786,305.0246

AP 127 (1012) = N 807,533.9872
E 786,298.5627

SET PK (1013) = N 810,201.7646
E 786,278.8901

60 D NAIL (1014) = N 812,840.1053
E 786,299.3433

GROUND			GRID		
AP 1016 (1015) =	N	815,513.3672	AP 1016 =	N	815,513.3357
	E	786,266.7983		E	786,266.7985
AP 1017 (1018) =	N	814,915.6112	AP 1017 =	N	814,915.6427
	E	786,270.9557		E	786,270.9555

AVERY

FCD Lines All SEC & QTR CORS
Panelled ACSD

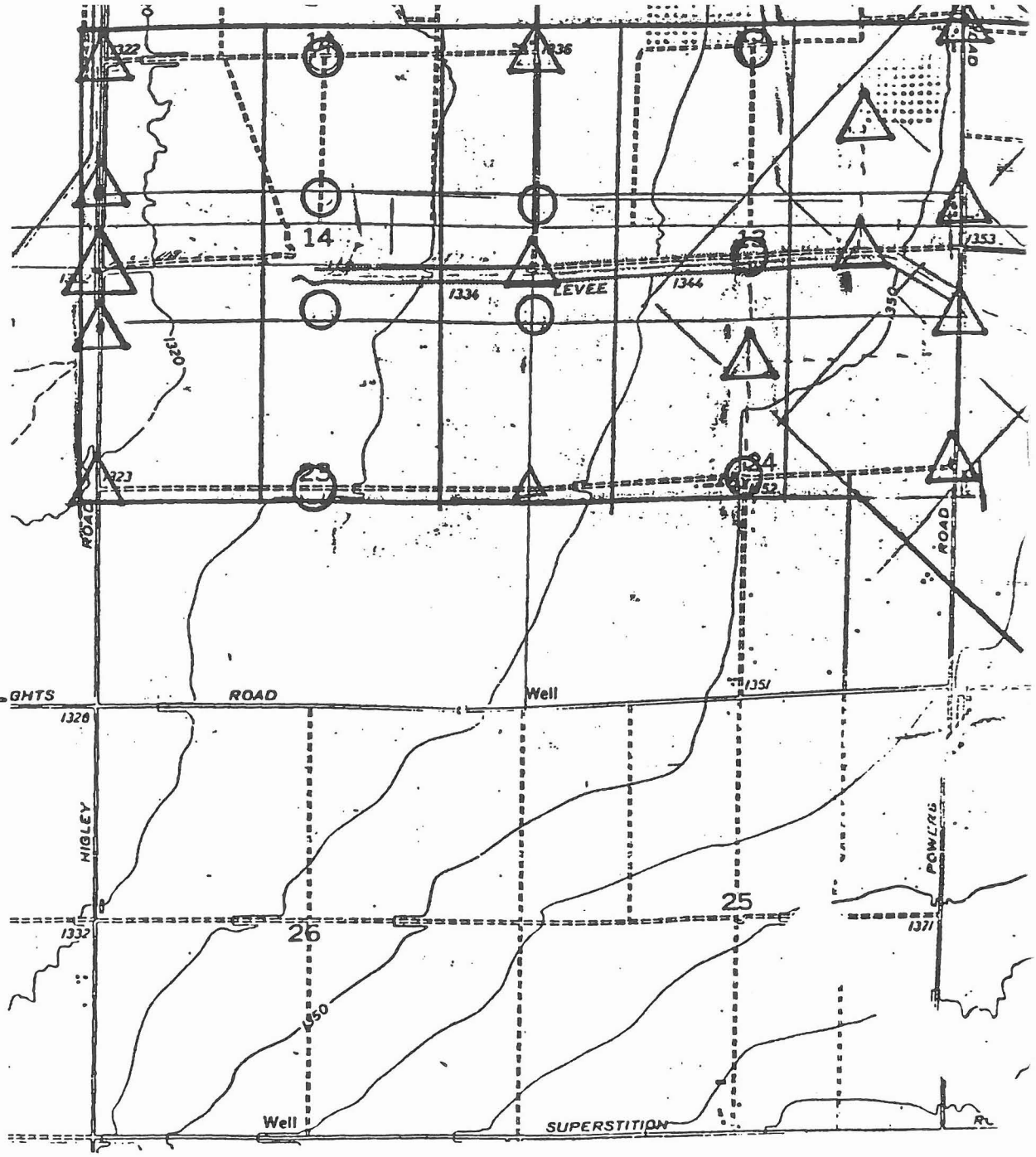

NEW LAYOUT 10-1-97

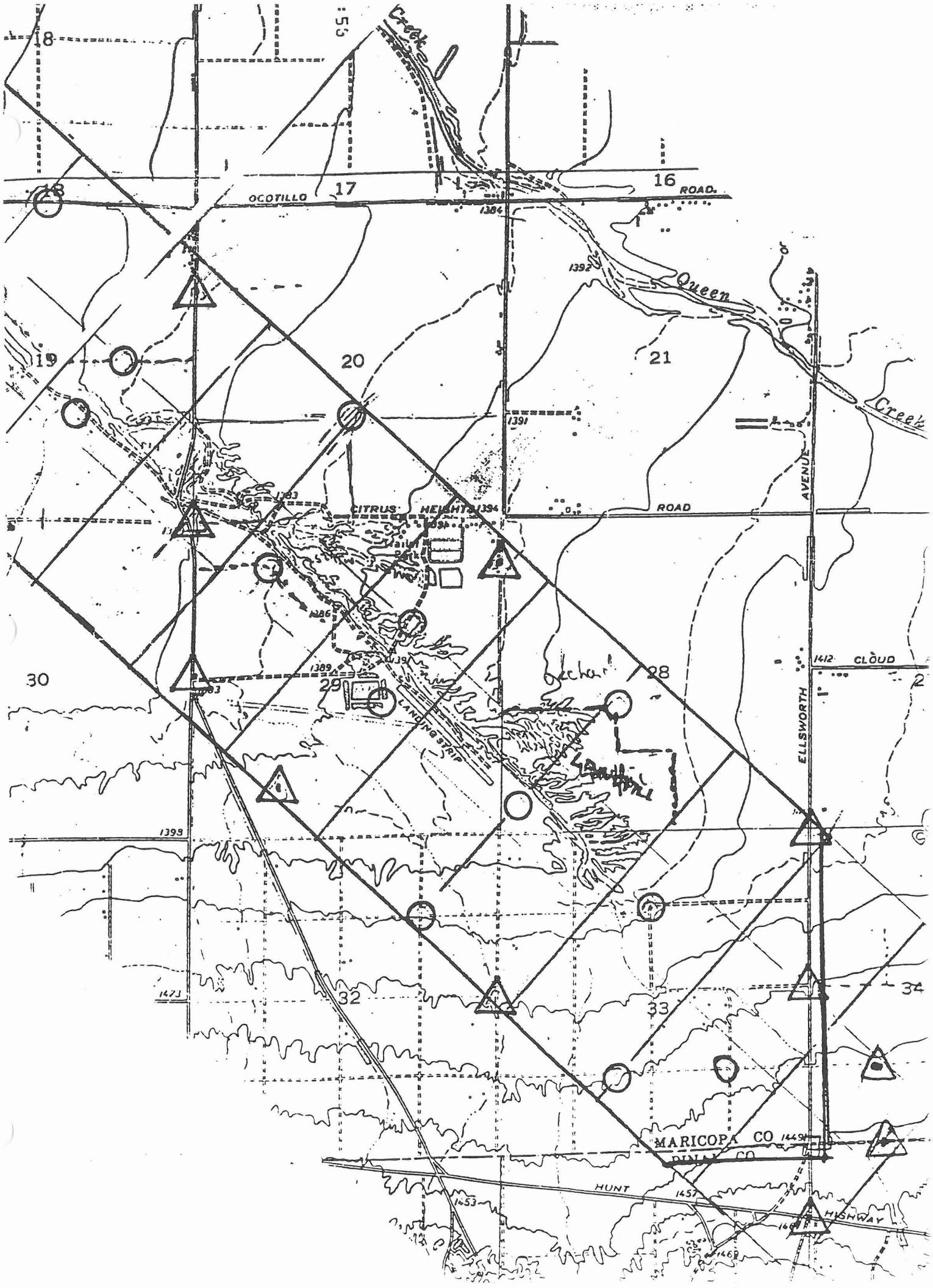
18
17
16
OCOTILLO
ROAD
1384
1392
Queen
Creek
19
20
21
1391
Creek
AVENUE
1383
CITRUS HEIGHTS
1394
ROAD
1386
1389
29
30
28
1412
CLOUD
ELLSWORTH
LANDING STRIP
1399
32
33
34
MARICOPA CO
PINAL CO
HUNT
1457
1453
HIGHWAY

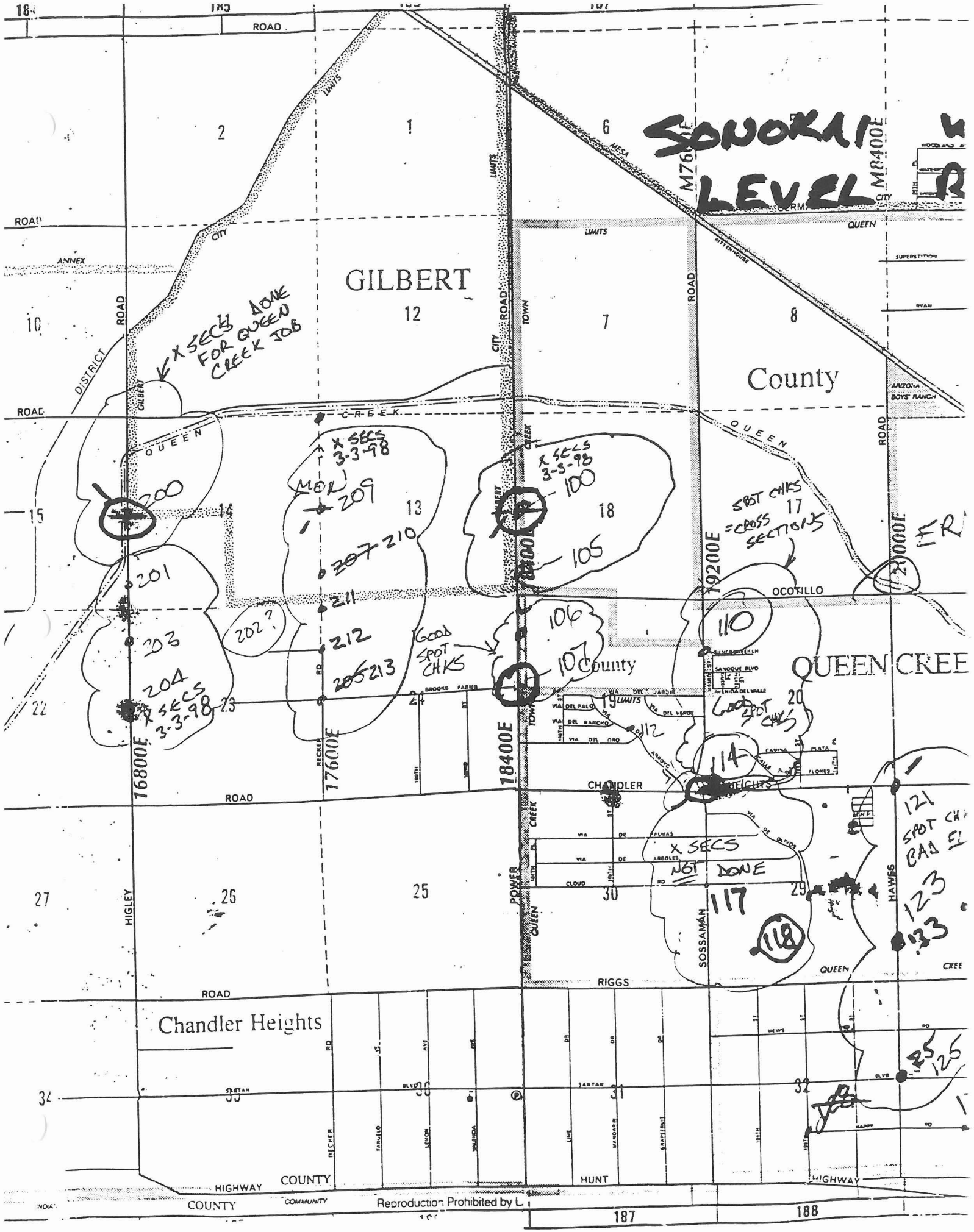
SONORAN
LEVEL
GILBERT
County
QUEEN CREEK
Chandler Heights
X SECS DONE FOR QUEEN CREEK JOB
X SECS 3-3-98
X SECS 3-3-98
X SECS 3-3-98
SPOT CHKS = CROSS SECTIONS
GOOD SPOT CHKS
GOOD SPOT CHKS
X SECS NOT DONE
SPOT CHKS BAD EL
16800E
17600E
18400E
19200E
20000E
HIGLEY
POWER
SOSSAMAN
HAWES
ROAD
RIGGS
OCOTILLO
CHANDLER
HUNT
HIGHWAY
COUNTY
COMMUNITY
Reproduction Prohibited by L

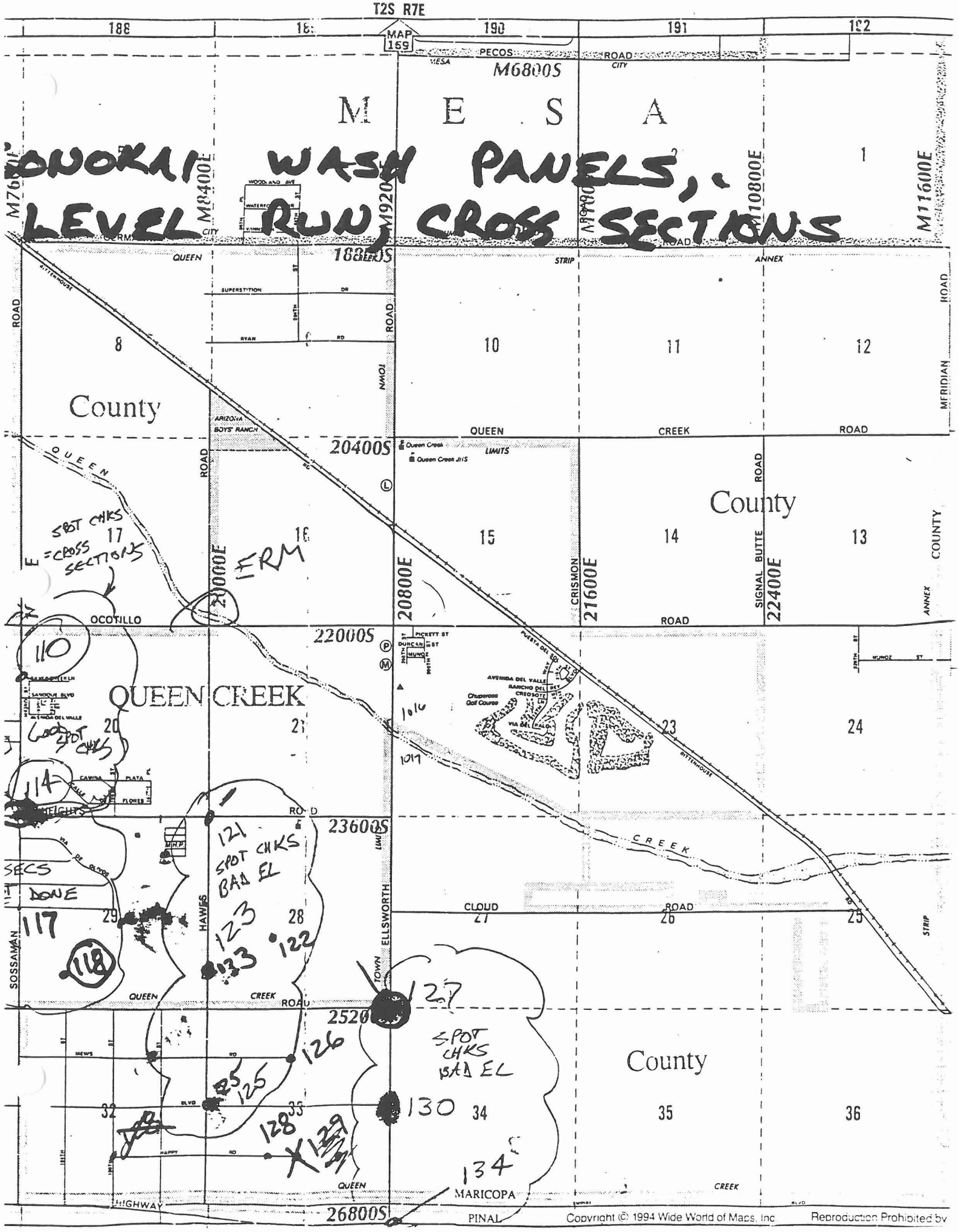

DUOKAI WASH PANELS,
LEVEL RUN, CROSS SECTIONS

SPOT CHKS
E = CROSS SECTIONS

ERM

110

Good SPOT CHKS

114

121
SPOT CHKS
BAD EL

SECS
DONE

117

118

123

133

122

127

126

SPOT CHKS
BAD EL

125

130

128

129

134

AVERY

PANEL DATA SHEET

Panel Number: 100

USGS Quad: HIGLEY Year Monumented: _____

Described By: _____ Year Recovered: _____

State / County: Az / Maricopa

Stamped

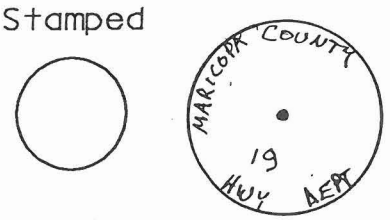

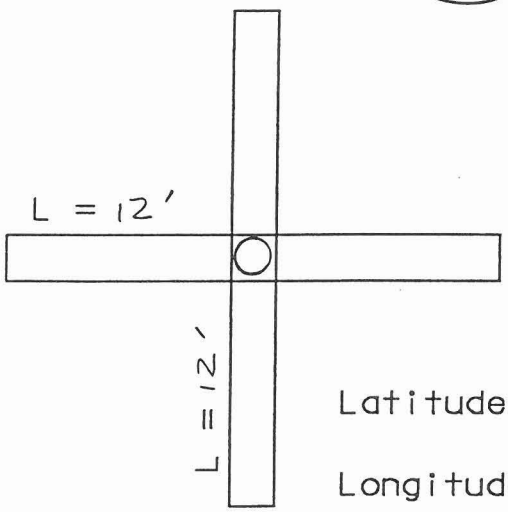

Location Sketch

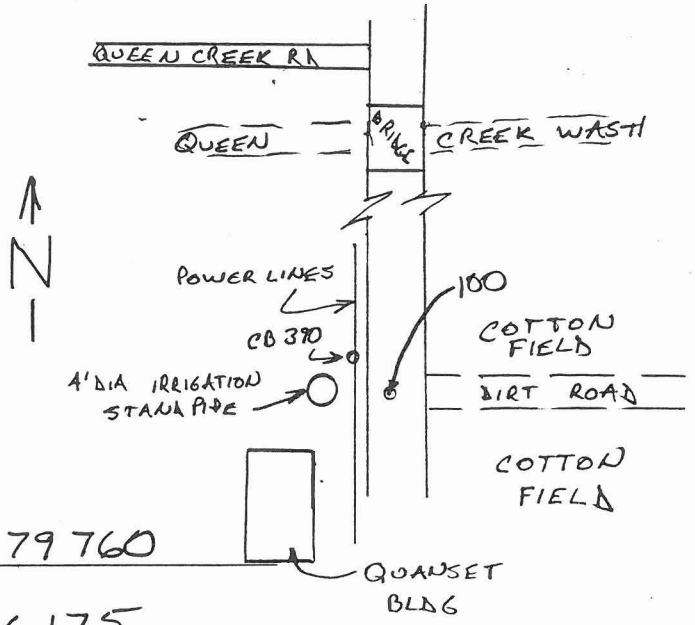

Latitude: 3679760

Longitude: 436175

To Reach: POWER ROAD 1/2 MILE SOUTH OF QUEEN CREEK BRIDGE

Entry Permit Required: Y ____ N X

Monument Description: MCHD BC IN HH

Gary Rush 10-20-97

Signature Date

PANEL DATA SHEET

Panel Number: 101

USGS Quad: HIGLEY Year Monumented: _____

Described By: _____ Year Recovered: _____

State / County: Az / Maricopa

Stamped

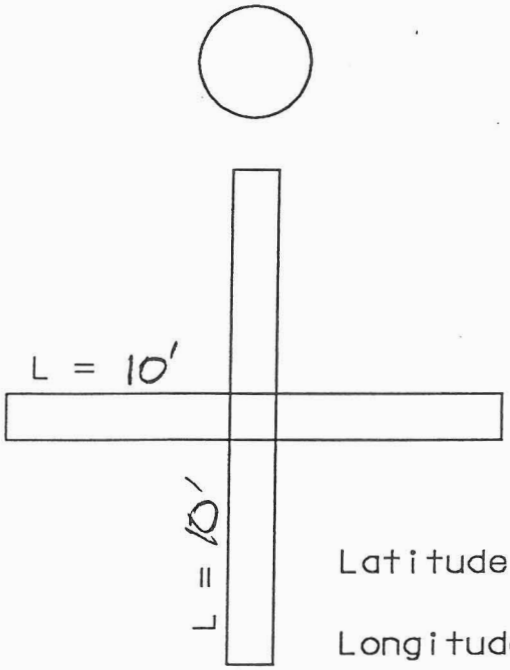

Location Sketch

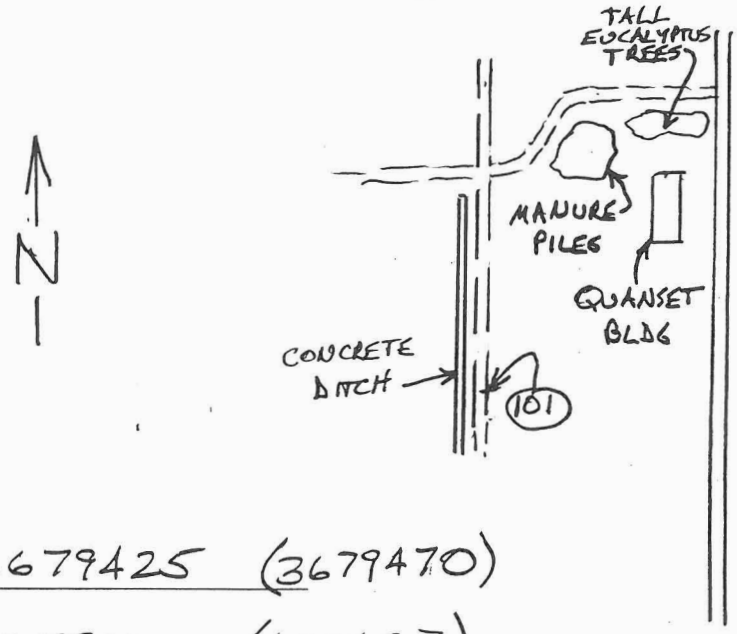

Latitude: 3679425 (3679470)

Longitude: 435810 (435687)

To Reach: FROM INTERSECTION OF QUEEN CREEK RD + POWER ROAD GO SOUTH ON POWER TO QUEEN CREEK BRIDGE, THEN SOUTH 1/2 MILE TO ROAD RUNNING WEST FOLLOW DIRT ROADS WEST 1/4 MILE + SOUTH 1/4 MILE. PANEL IS AT EAST EDGE ROAD 25'± EAST OF CONCRETE DITCH

Entry Permit Required: Y ___ N X

Monument Description: SET 1/2" REBAR IN PLASTIC PANEL

Signature Date 10-23-97

PANEL DATA SHEET

Panel Number: 102

USGS Quad: Chandler Hght Year Monumented: _____

Described By: _____ Year Recovered: _____

State / County: Az / Maricopa

Stamped

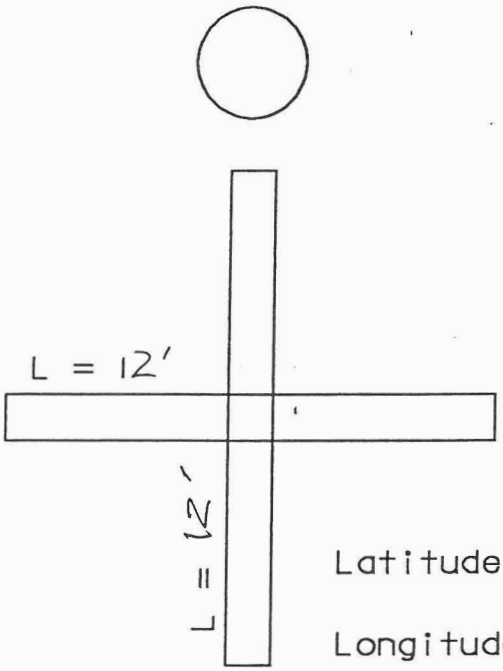

Location Sketch

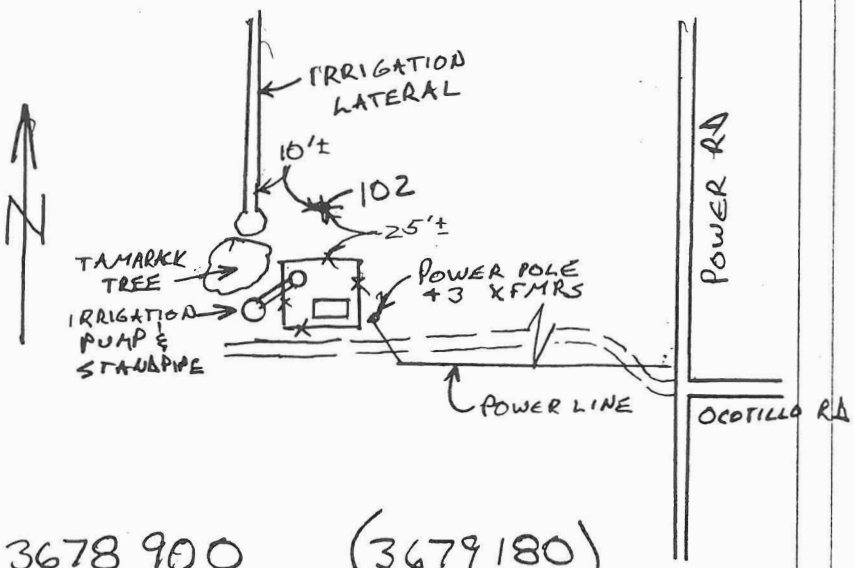

Latitude: 3678900 (3679180)

Longitude: 435360 (435242)

To Reach: OCOTILLO ROAD (DIRT) 1/2 MILE WEST OF POWER, ALONG NORTH BANK OF WASH

Entry Permit Required: Y____ N____

Monument Description: FOUND OLD AIR PANEL, RESET PLASTIC OVER 1/2" REBAR

Signature Date

PANEL DATA SHEET

Panel Number: 103

USGS Quad: Chandler hght Year Monumented: _____

Described By: _____ Year Recovered: _____

State / County: Az/Maricopa

Stamped

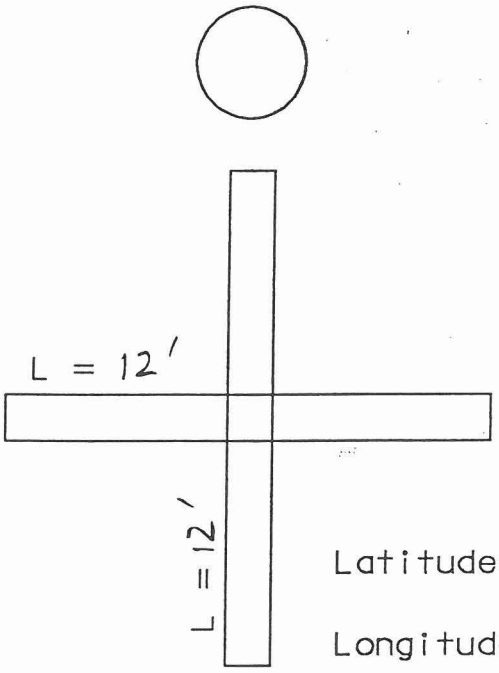

Location Sketch

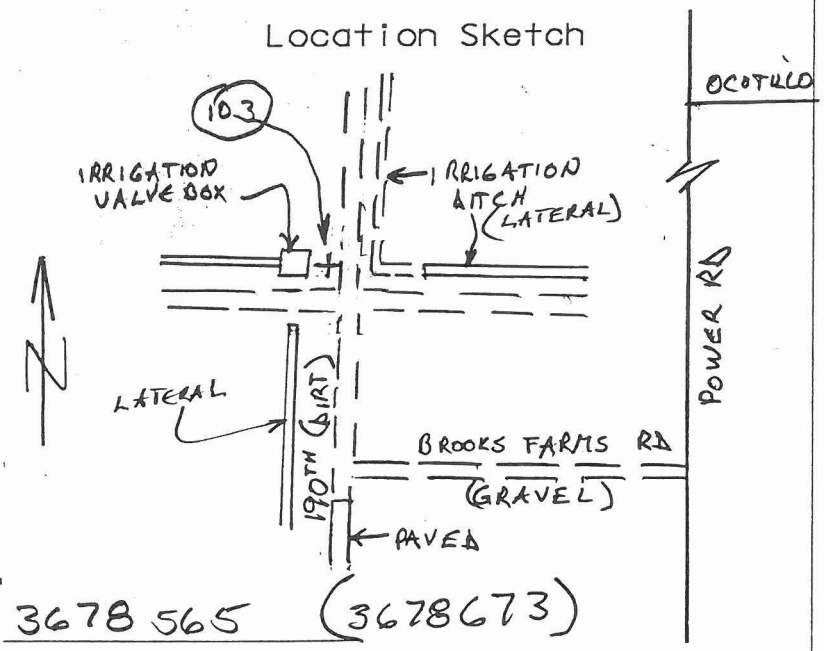

Latitude: 3678 565 (3678673)

Longitude: 435 360 (435432)

To Reach: 1/2 MILE SOUTH OF OCOTILLO ON POWER TO BROOKS FARMS RD, WEST ON BROOKS FARMS 1/2 MI TO 190TH ST, NORTH ON DIRT RD 1/4 MILE TO INTERSECTION OF DIRT ROADS + IRRIGATION LATERALS

Entry Permit Required: Y ____ N X

Monument Description: SET 1/2" REBAR IN PLASTIC PANEL

Signature 10-23-97 Date

PANEL DATA SHEET

Panel Number: 104

USGS Quad: Chandler Hght Year Monumented: _____

Described By: _____ Year Recovered: _____

State / County: Az/Maricopa

Stamped

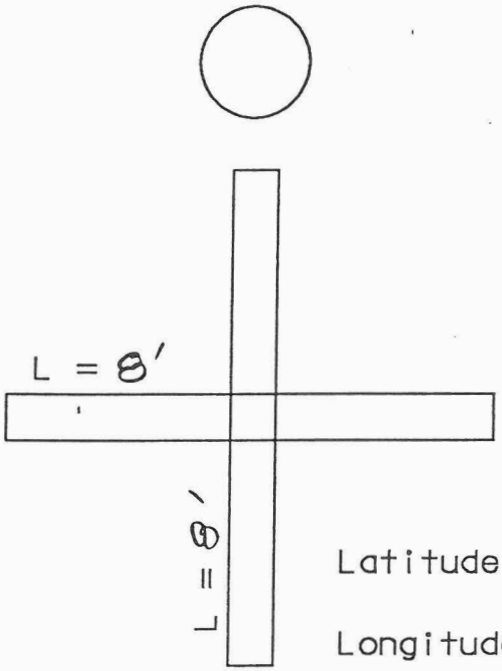

Location Sketch

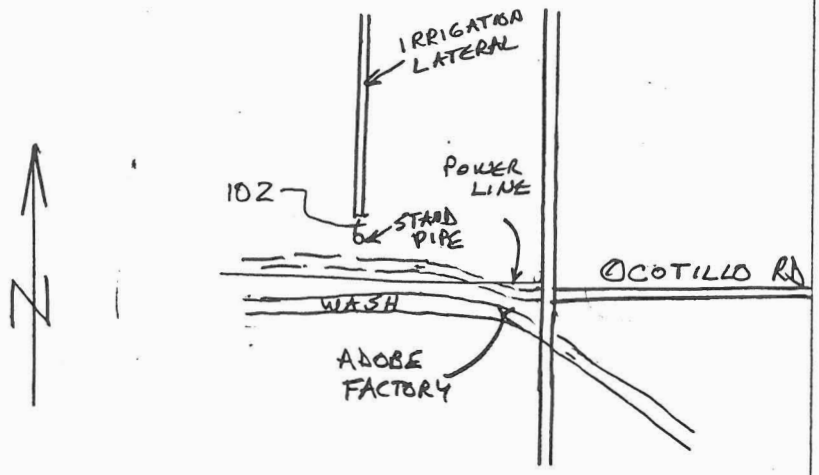

Latitude: 3678925 (3679129)

Longitude: 435800 (435699)

To Reach: OCOTILLO RD (DIRT) 1/4 MILE EAST OF POWER RD

Entry Permit Required: Y ___ N X

Monument Description: SET 1/2" REBAR IN PLASTIC PANEL

Signature 10-22-97 Date

PANEL DATA SHEET

Panel Number: 105

USGS Quad: HIGLEY Year Monumented: _____

Described By: _____ Year Recovered: _____

State / County: Az/Maricopa

Stamped

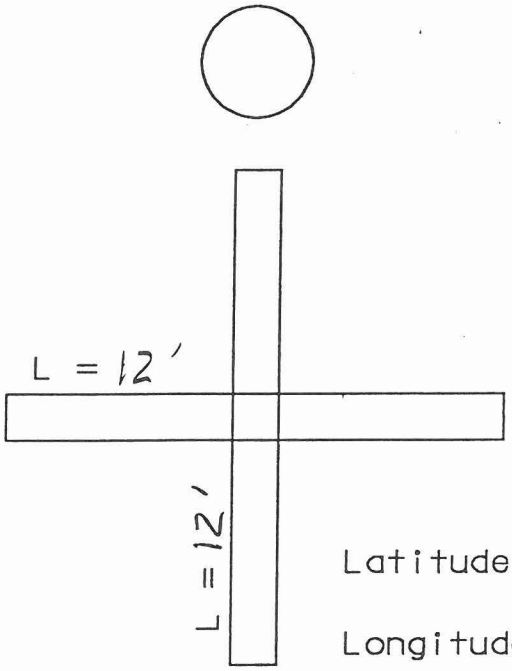

Location Sketch

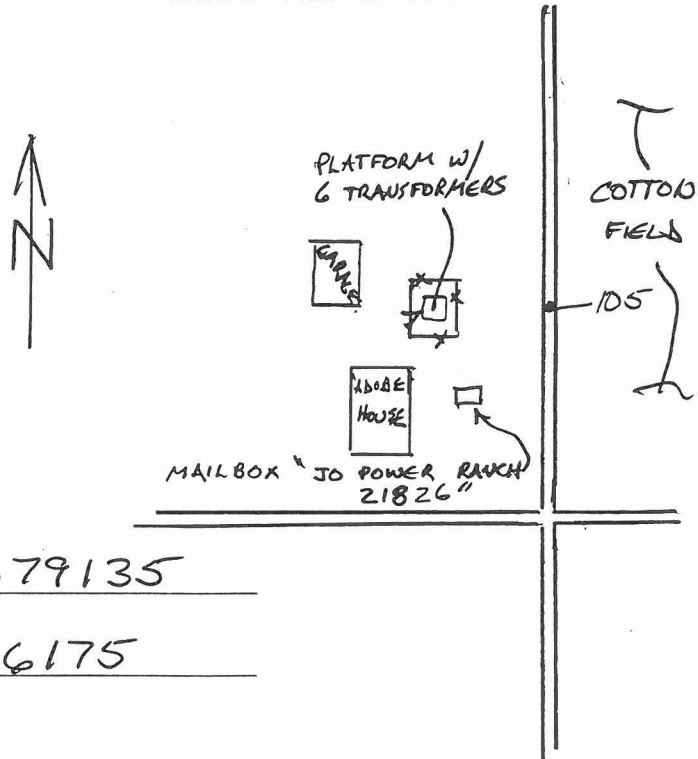

Latitude: 3679135

Longitude: 436175

To Reach: POWER ROAD ~ 600' NORTH OF OCOTILLO RD

Entry Permit Required: Y ____ N X

Monument Description: SET PK NAIL IN SOUTHBOUND LANE

Gary Rush
Signature

10-20-97
Date

PANEL DATA SHEET

Panel Number: 106

USGS Quad: Chandler Hght Year Monumented: _____

Described By: _____ Year Recovered: _____

State / County: Az / Maricopa

Stamped

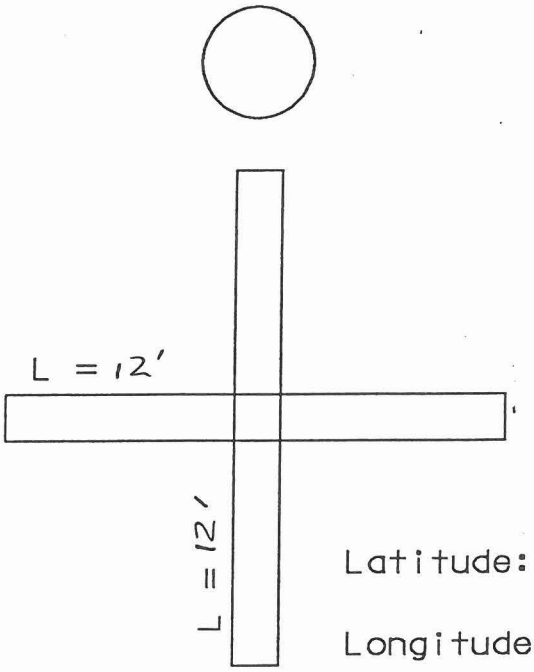

Location Sketch

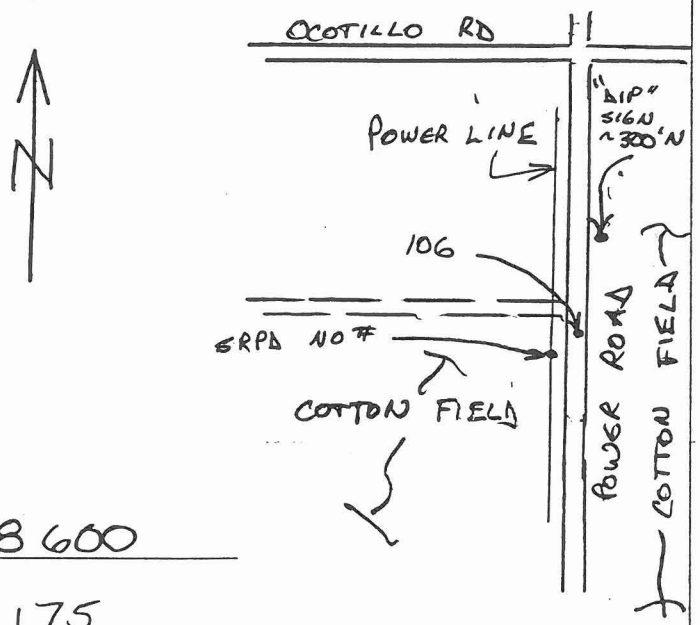

Latitude: 3678600

Longitude: 436175

To Reach: POWER ROAD 1/4 MILE S. OF OCOTILLO RD

Entry Permit Required: Y ___ N X

Monument Description: SET PK IN SOUTHBOUND LANE

Signature

10-20-97
Date

PANEL DATA SHEET

Panel Number: 107

USGS Quad: Chandler Hght Year Monumented: _____

Described By: _____ Year Recovered: _____

State / County: Az / Maricopa

Stamped

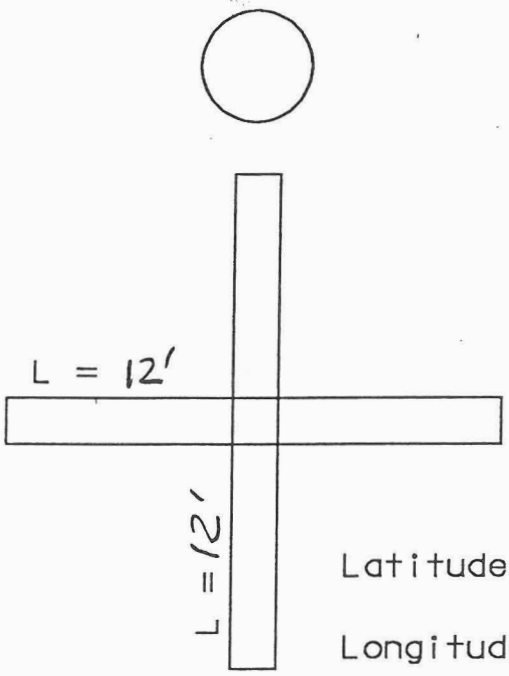

Location Sketch

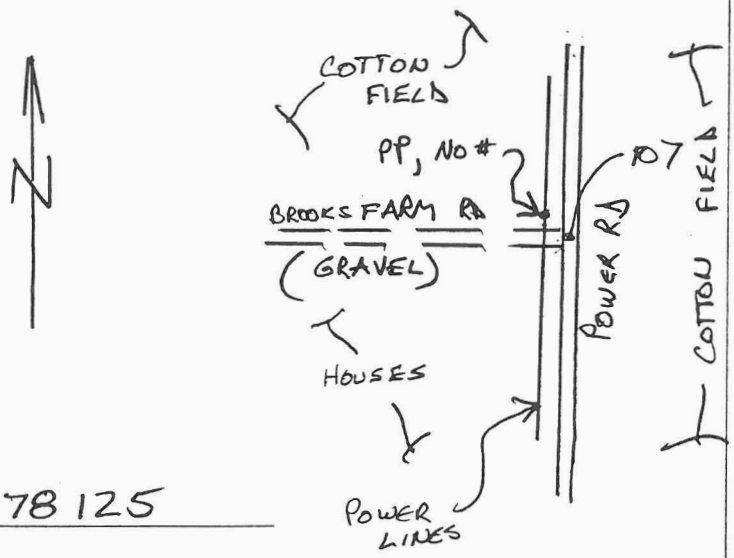

Latitude: 3678125

Longitude: 436175

To Reach: POWER ROAD 1/2 MILE S. OF OCOTILLO ROAD @ INTERSECTION BROOKS FARM RD TO THE WEST

Entry Permit Required: Y ___ N X

Monument Description: 1/2" REBAR - PUNCHED - SET IN CONCRETE IN HAND HOLE

Gary Rush 10-20-97

Signature Date

PANEL DATA SHEET

Panel Number: 108

USGS Quad: Chandler Hght Year Monumented: _____

Described By: _____ Year Recovered: _____

State / County: Az / Maricopa

Stamped

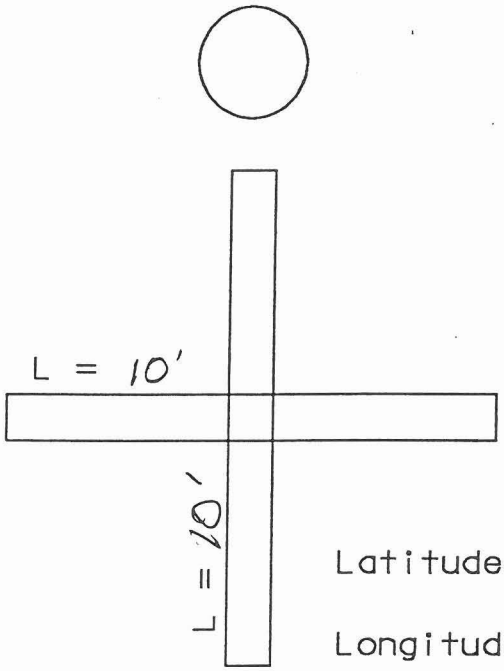

Location Sketch

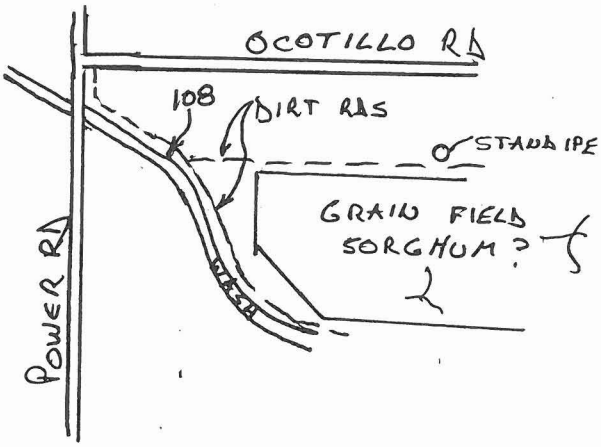

Latitude: 3678400 (3678727)

Longitude: 436650 (436486)

To Reach: TAKE DIRT ROAD AT SE CORNER OF OCOTILLO & POWER. SOUTH + EAST ALONG NORTH BANK OF WASH TO FORK IN ROAD. WASH BENDS MORE SOUTH AT THIS POINT.

Entry Permit Required: Y ____ N X

Monument Description: SET 1/2" REBAR IN PLASTIC PANEL

Gary Rush 10-22-97

Signature Date

PANEL DATA SHEET

Panel Number: 109

USGS Quad: Chandler Hght Year Monumented: _____

Described By: _____ Year Recovered: _____

State / County: Az / Maricopa

Stamped

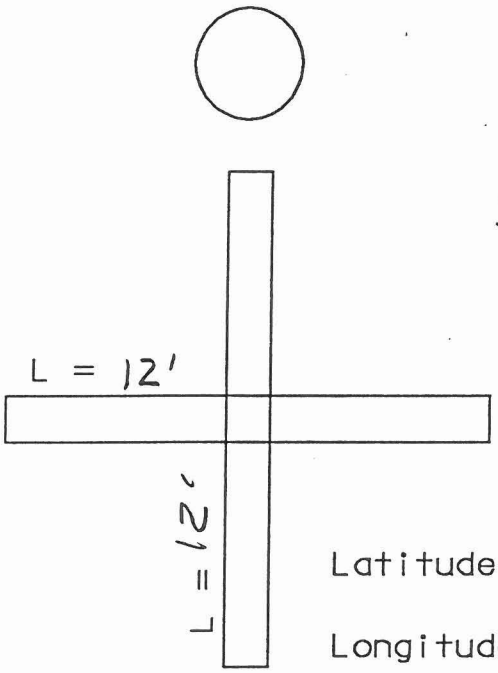

Location Sketch

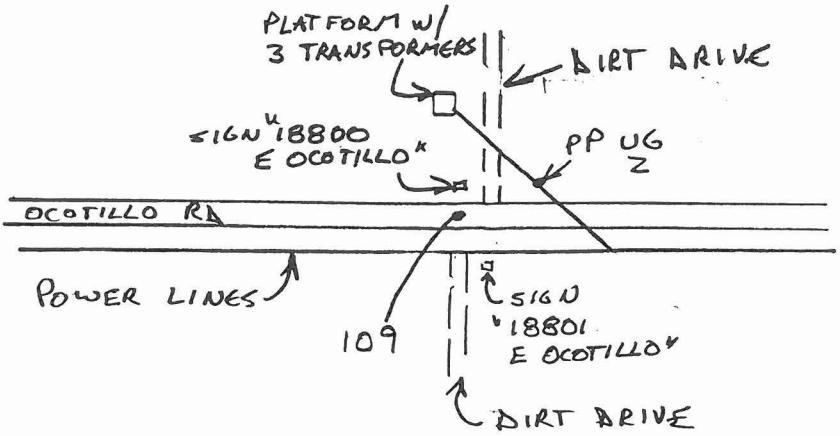

Latitude: 3678875

Longitude: 436955

To Reach: OCOTILLO RD 1/2 MILE EAST OF POWER RD

Entry Permit Required: Y ___ N X

Monument Description: SET PK IN WESTBOUND LANE

Signature

10-20-97
Date

PANEL DATA SHEET

Panel Number: 110

USGS Quad: Chandler Hgh# Year Monumented: _____

Described By: _____ Year Recovered: _____

State / County: Az / Maricopa

Stamped

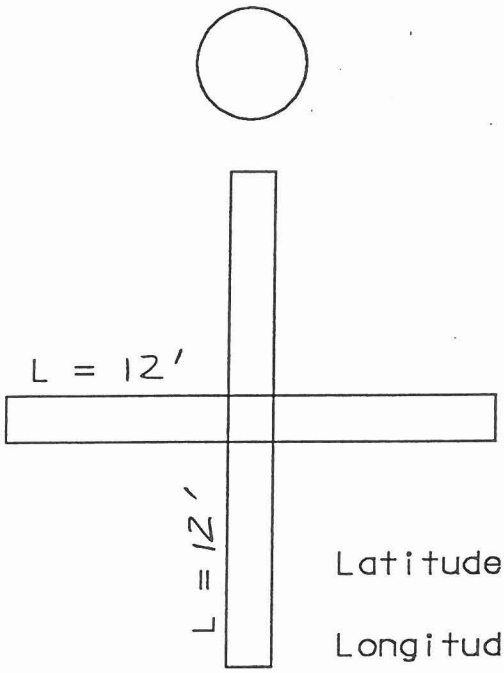

Location Sketch

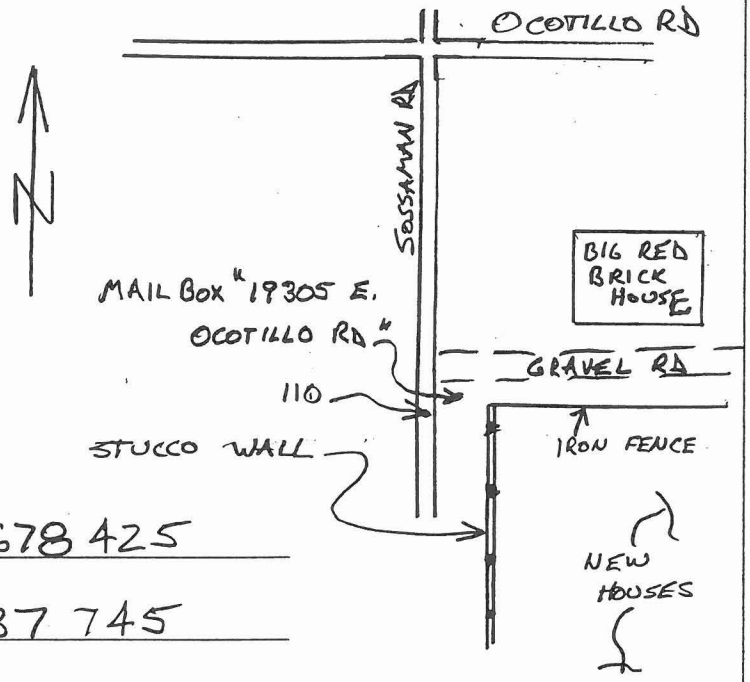

Latitude: 3678425

Longitude: 437745

To Reach: SOSSAMAN RD 1/4 MILE S. OF OCOTILLO RD

Entry Permit Required: Y ___ N X

Monument Description: SET PK IN SOUTHBOUND LANE SOSSAMAN RD

Signature: [signature] Date: 10-20-97

PANEL DATA SHEET

Panel Number: 111

USGS Quad: Chandler Hght Year Monumented: _____

Described By: _____ Year Recovered: _____

State / County: Az/Maricopa

Stamped

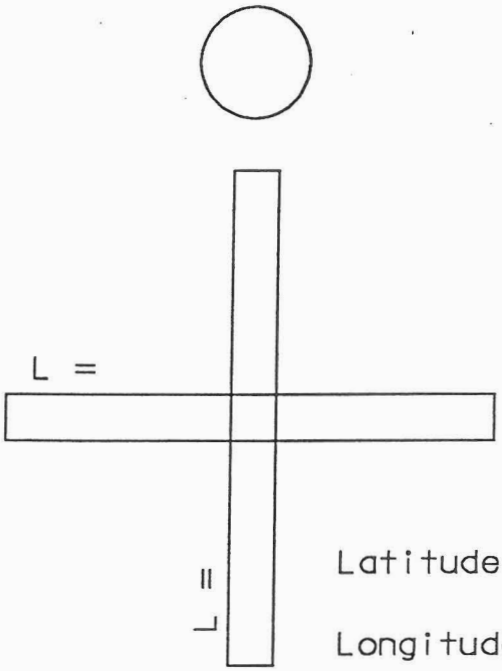

Location Sketch

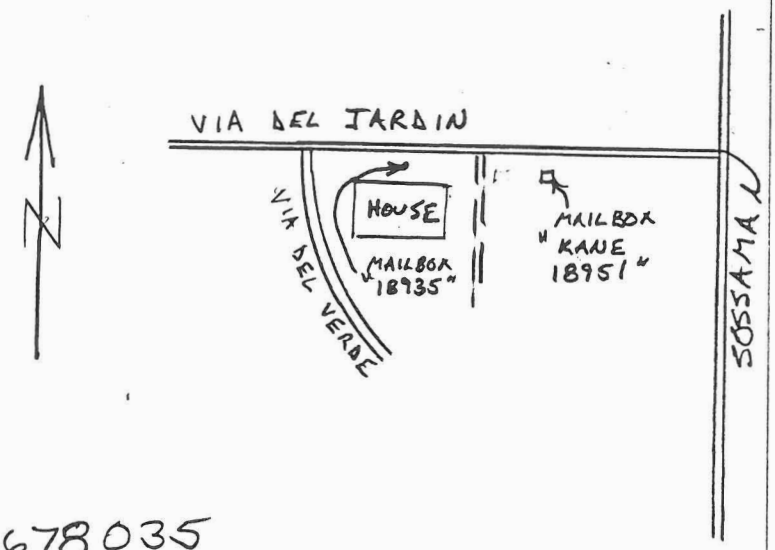

Latitude: 3678035

Longitude: 437 345

To Reach: 1/2 MILE S. OF OCOTILLO ON SOSSAMAN TO VIA DEL JARDIN. 1/4 MILE WEST ON VIA DEL JARDIN

Entry Permit Required: Y ___ N X

Monument Description: SET PK IN ℄ ASPHALT RD

Gary Rush 10-20-97

Signature Date

PANEL DATA SHEET

Panel Number: 112

USGS Quad: Chandler Hght Year Monumented: _____

Described By: _____ Year Recovered: _____

State / County: Az / Maricopa

Stamped

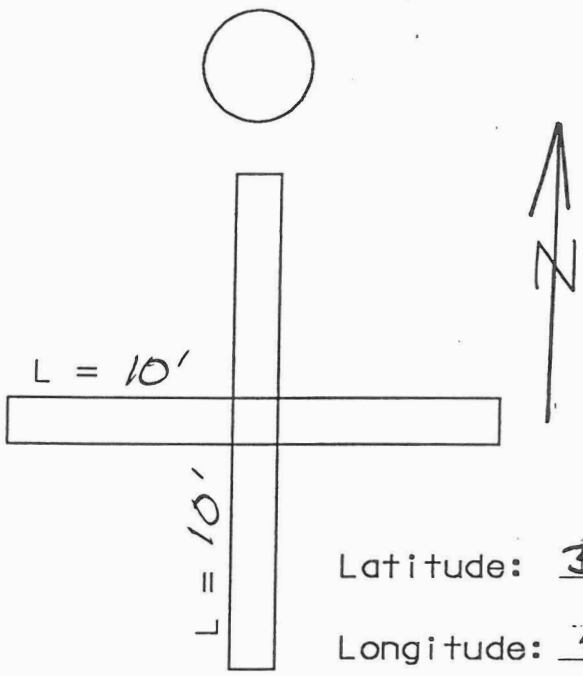

Location Sketch

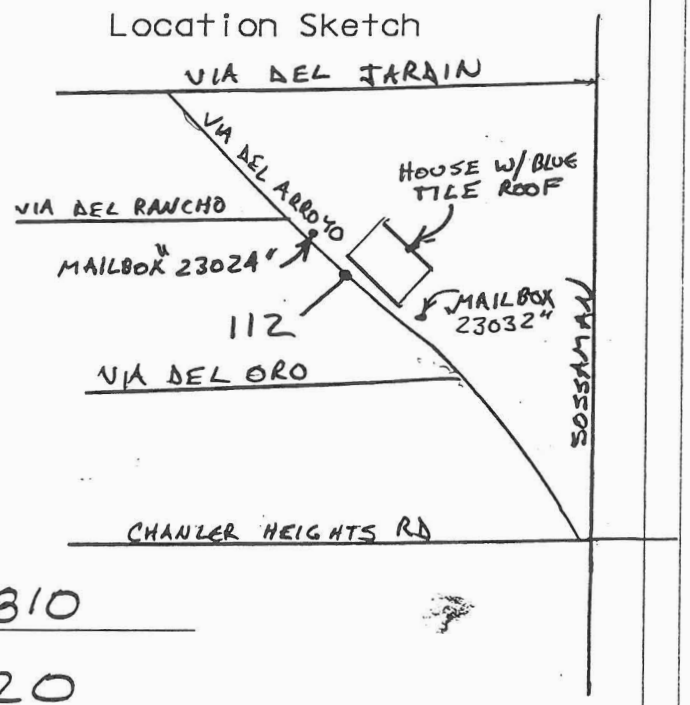

Latitude: 3677810

Longitude: 437120

To Reach: CHANDER HEIGHTS RD WEST FROM SOSSAMAN 1/10 MILE NW ON VIA DEL ARROYO BETWEEN VIA DEL ORO + VIA DEL RANCHO

Entry Permit Required: Y ___ N X

Monument Description: SET PK IN & ASPHALT

Signature 10-20-97 Date

PANEL DATA SHEET

Panel Number: 113

USGS Quad: Chandler Hght Year Monumented: _____

Described By: _____ Year Recovered: _____

State / County: Az/Maricopa

Stamped

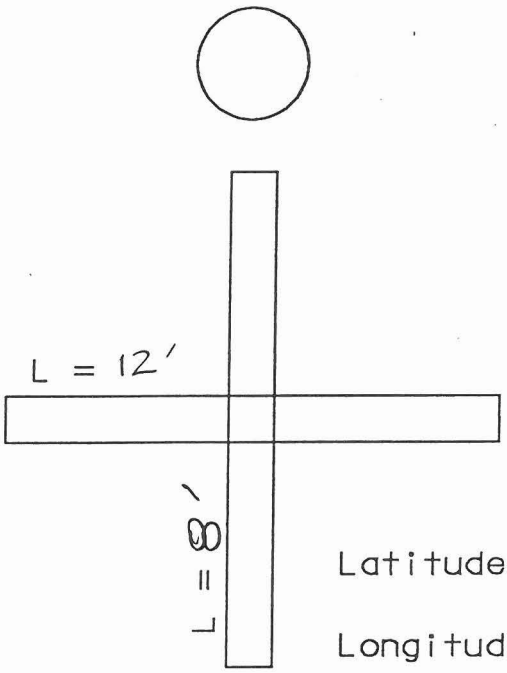

Location Sketch

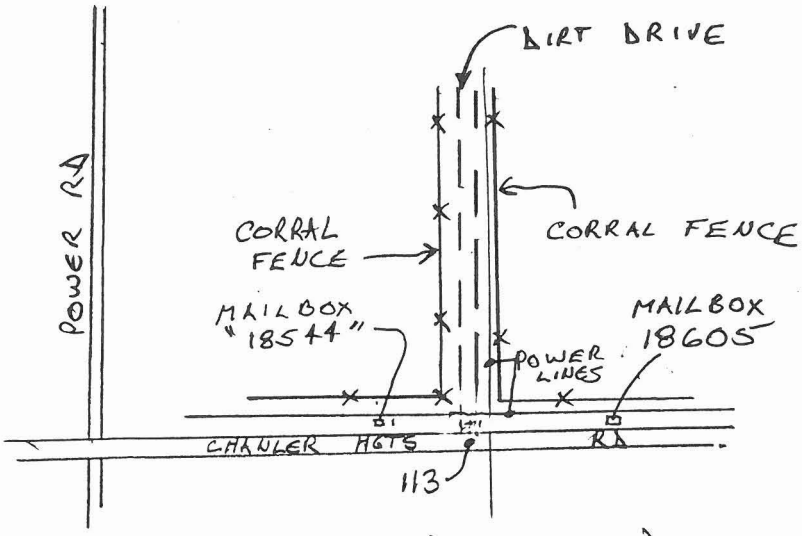

Latitude: 3677680 (3677390)

Longitude: 436260 (436438)

To Reach: CHANDLER HEIGHTS RD 1/4 MILE EAST OF POWER ROAD

Entry Permit Required: Y ___ N X

Monument Description: SET PK IN EAST BOUND LANE

Gary Rusk 10-22-97

Signature Date

PANEL DATA SHEET

Panel Number: 114

USGS Quad: Chandler Hght Year Monumented: _____

Described By: _____ Year Recovered: _____

State / County: Az/Maricopa

Stamped

Location Sketch

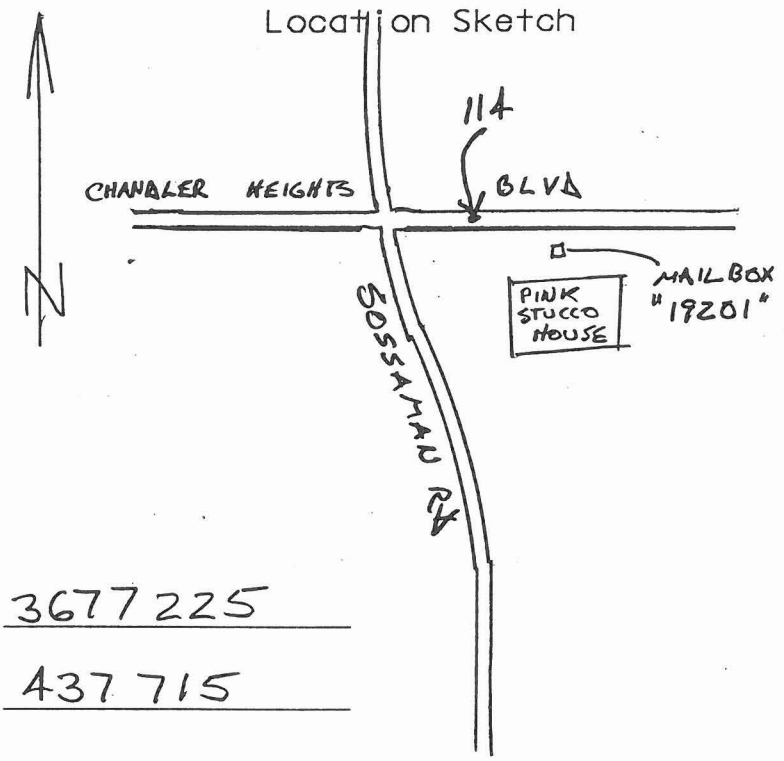

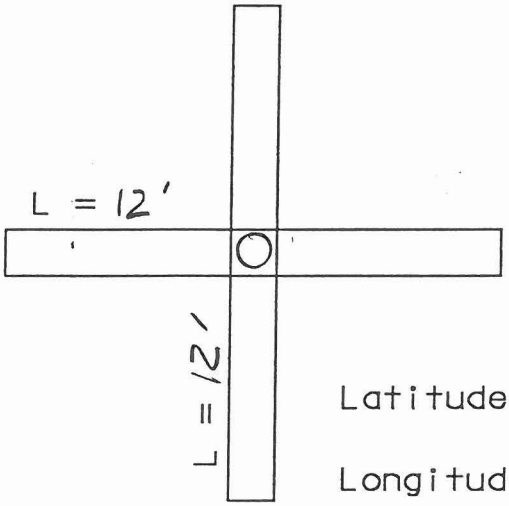

Latitude: 3677225

Longitude: 437715

To Reach: 100' EAST OF INTERSECTION SOSSAMAN RD + CHANDLER HEIGHTS BLVD

Entry Permit Required: Y ___ N X

Monument Description: BRASS CAP IN HANDHOLE

Gary Rich 10-20-97

Signature Date

PANEL DATA SHEET

Panel Number: 115

USGS Quad: Chandler Hght Year Monumented: _____

Described By: _____ Year Recovered: _____

State / County: Az/Maricopa

Stamped

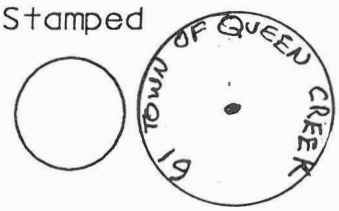

Location Sketch

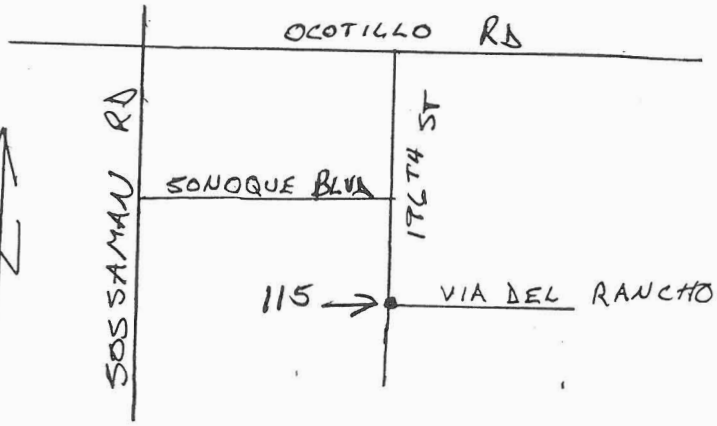

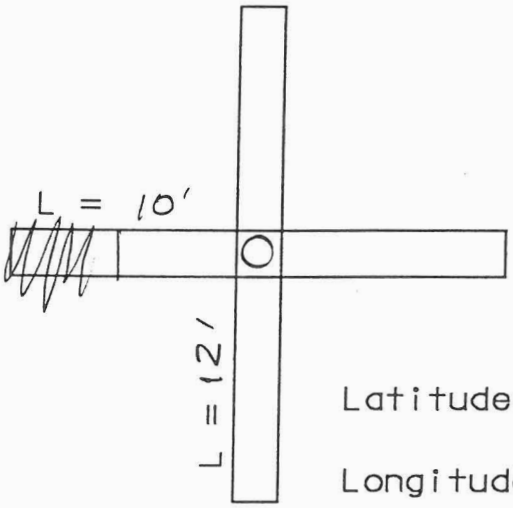

Latitude: 3677710 (3678150)

Longitude: 438598 (438511)

To Reach: 196TH ST + VIA DEL RANCHO & INTERSECTION 1/2 MILE EAST OF SOSSAMAN, 5/8 MILE SOUTH OF OCOTILLO RD

Entry Permit Required: Y ___ N X

Monument Description: BRASS CAP FLUSH

Signature

10-22-97

Date

PANEL DATA SHEET

Panel Number: 116

USGS Quad: Chandler Hght Year Monumented: _____

Described By: _____ Year Recovered: _____

State / County: Az / Maricopa

Stamped

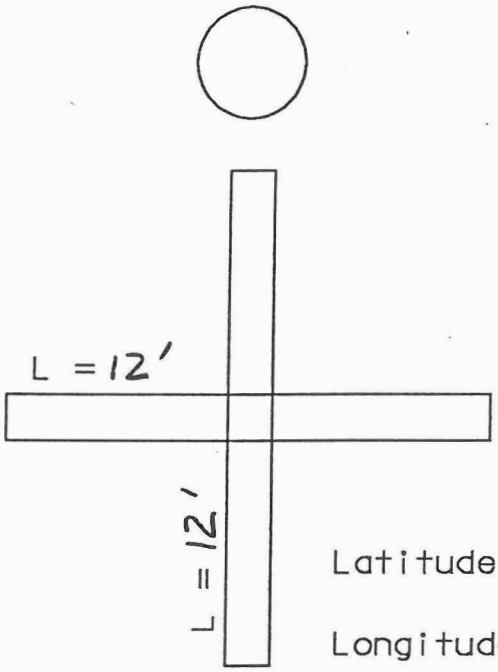

Location Sketch

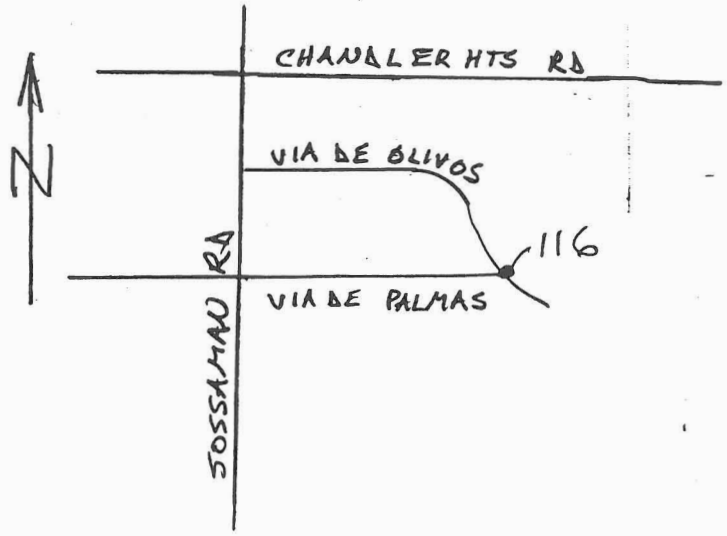

Latitude: 3677001

Longitude: 438150

To Reach: 1/4 MILE SOUTH ON SOSSAMAN FROM CHANDLER HEIGHTS RD TO VIA DE PALMAS. 1/4 MILE EAST TO VIA DE OLIVOS

Entry Permit Required: Y ___ N X

Monument Description: SET PK NAIL @ ℄-℄ VIA DE PALMAS & VIA DE OLIVOS

Gary Rush 10-20-97

Signature Date

PANEL DATA SHEET

Panel Number: 117

USGS Quad: Chandler Hght Year Monumented: _____

Described By: _____ Year Recovered: _____

State / County: Az / Maricopa

Stamped

"+" NO OTHER MARKS

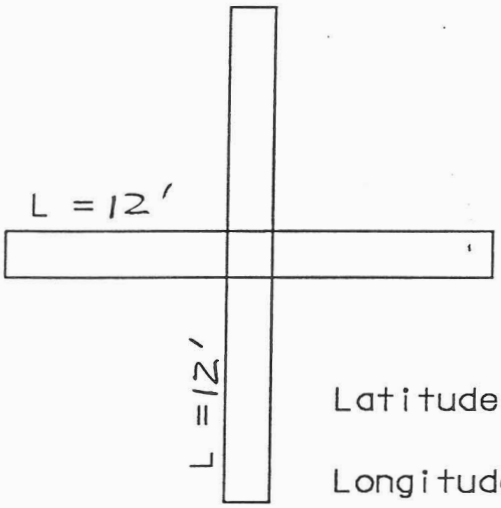

Location Sketch

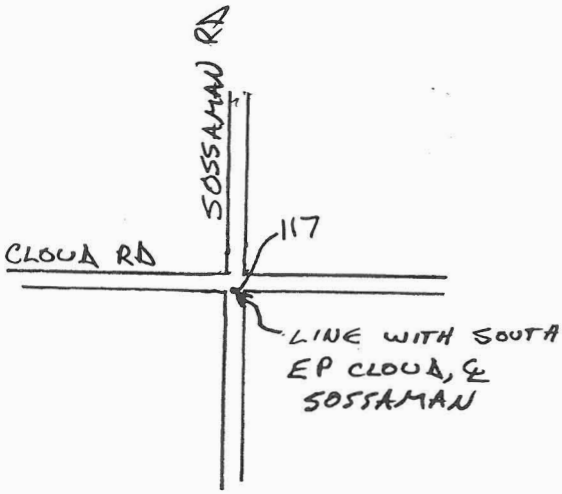

Latitude: 3676425

Longitude: 437730

To Reach: _____

Entry Permit Required: Y ____ N X

Monument Description: FOUND 1½" ALUMINUM CAP, FLUSH W/ PAVEMENT

_____

Signature Date

PANEL DATA SHEET

Panel Number: 118

USGS Quad: Chandler Hght. Year Monumented: _____

Described By: _____ Year Recovered: _____

State / County: Az/Maricopa

Stamped

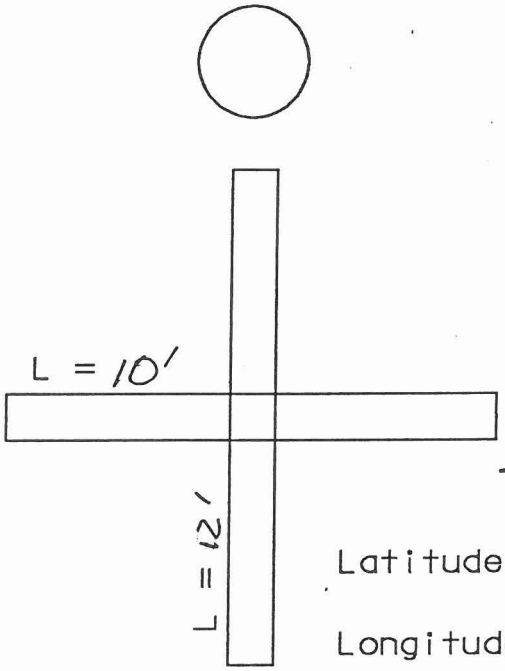

Location Sketch

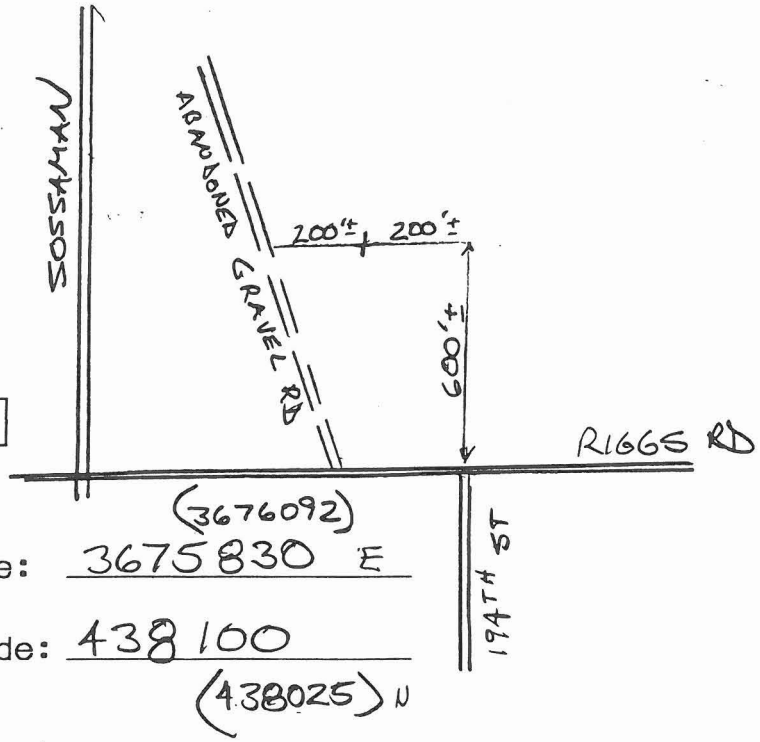

(3676092)

Latitude: 3675830 E

Longitude: 438100

(438025) N

To Reach: FROM 194TH ST + RIGGS RD GO EEST TO BARB WIRE GATE, NORTH SIDE RIGGS, NORTH OF 196TH ST. DRIVE NORTH + WEST ACROSS OPEN DESERT TO PANEL

Entry Permit Required: Y ____ N X

Monument Description: SET 1/2" REBAR IN PLASTIC PANEL

Gary Rush 10-23-97

Signature Date

PANEL DATA SHEET

Panel Number: 119

USGS Quad: Chandler Hgts Year Monumented: _____

Described By: _____ Year Recovered: _____

State / County: Az / Maricopa

Stamped

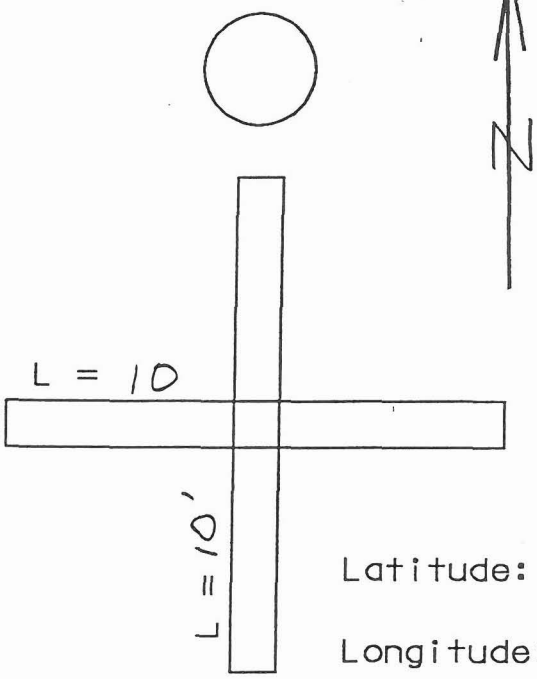

Location Sketch

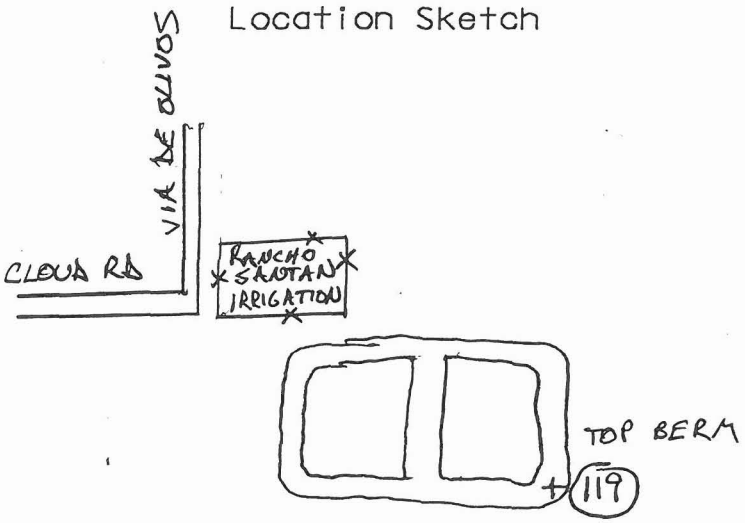

Latitude: 3676275 (3676549)

Longitude: 437735 (438630)

To Reach: 1/2 MILE S OF CHANDLER HGHTS RD + 1/2 MILE EAST OF GOSSAMAN TO INTERSECTION OF VIA DE OLIVOS + CLOUD RD. THEN SOUTHEAST TO SOUTHEAST CORNER OF EARTH BERM RETENTION BASIN ~600' PANEL IS ON TOP BERM

Entry Permit Required: Y ____ N X

Monument Description: SET 1/2 REBAR IN PLASTIC PANEL

Jerry Rush 10-23-97

Signature Date

PANEL DATA SHEET

Panel Number: 120

USGS Quad: Chandler Hght Year Monumented: _____

Described By: _____ Year Recovered: _____

State / County: Az / Maricopa

Stamped

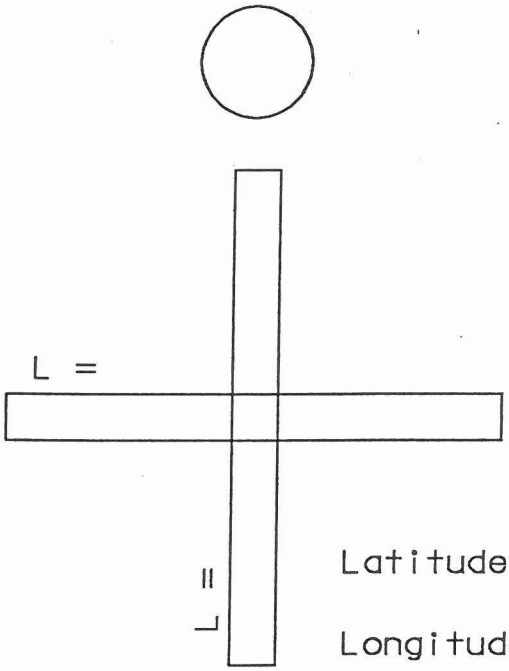

Location Sketch

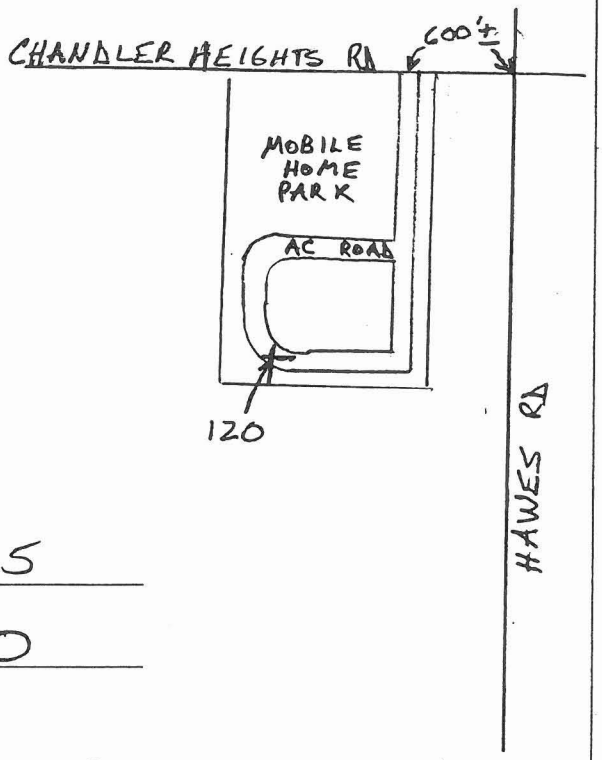

Latitude: 3676725

Longitude: 437850

To Reach: 600'± WEST OF HAWES RD ON CHANDLER HEIGHTS RD. ENTRANCE ROAD TO MOBILE HOME PARK GO SOUTH TO END THEN WEST TO CORNER - SW CORNER OF PARK ON STREET

Entry Permit Required: Y ___ N X

Monument Description: SET PK IN ASPHALT

Gary C Rush — Signature

10-21-97 — Date

PANEL DATA SHEET

Panel Number: 121

USGS Quad: Chandler Hght Year Monumented: _____

Described By: _____ Year Recovered: _____

State / County: Az / Maricopa

Stamped

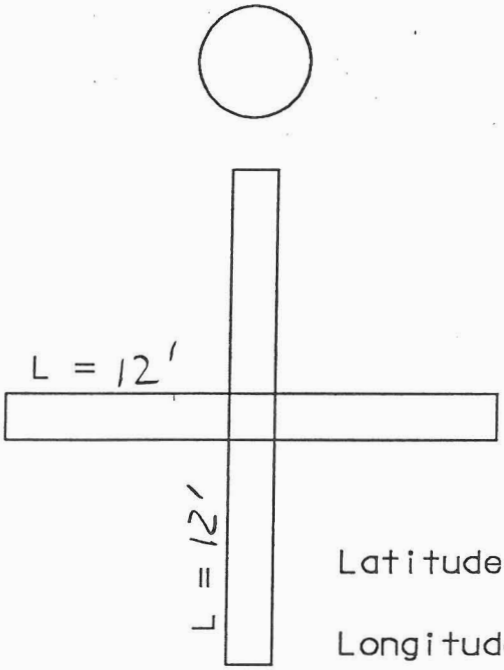

Location Sketch

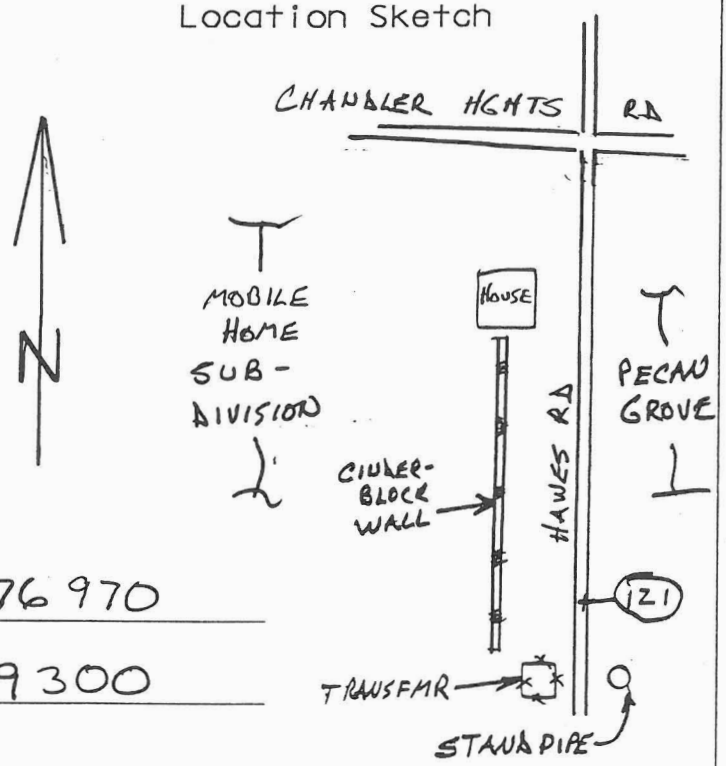

Latitude: 3676970

Longitude: 439300

To Reach: 800'± SOUTH OF CHANDLER HEIGHTS ROAD ON HAWES RD ~200' NORTH OF IRRIGATION STAND PIPE + FENCED IN ELECTRIC TRANSFORMER

Entry Permit Required: Y ____ N X

Monument Description: SET PK NAIL IN NORTH BOUND LANE

Signature: [signature] Date: 10-21-97

PANEL DATA SHEET

Panel Number: 122

USGS Quad: Chandler Hght Year Monumented: _____

Described By: _____ Year Recovered: _____

State / County: Az / Maricopa

Stamped

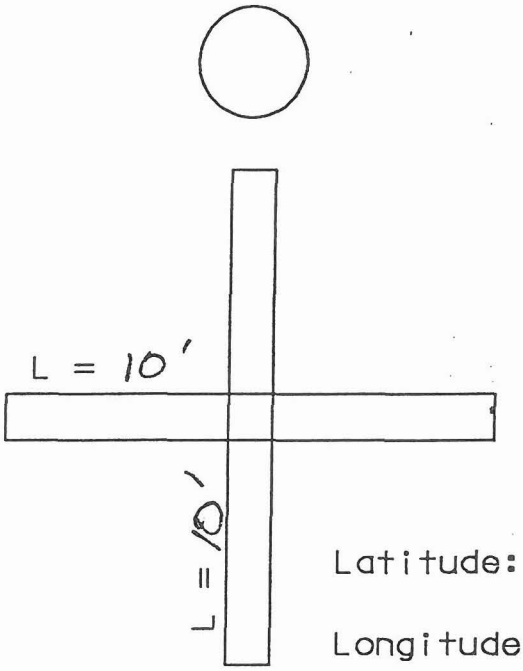

Location Sketch

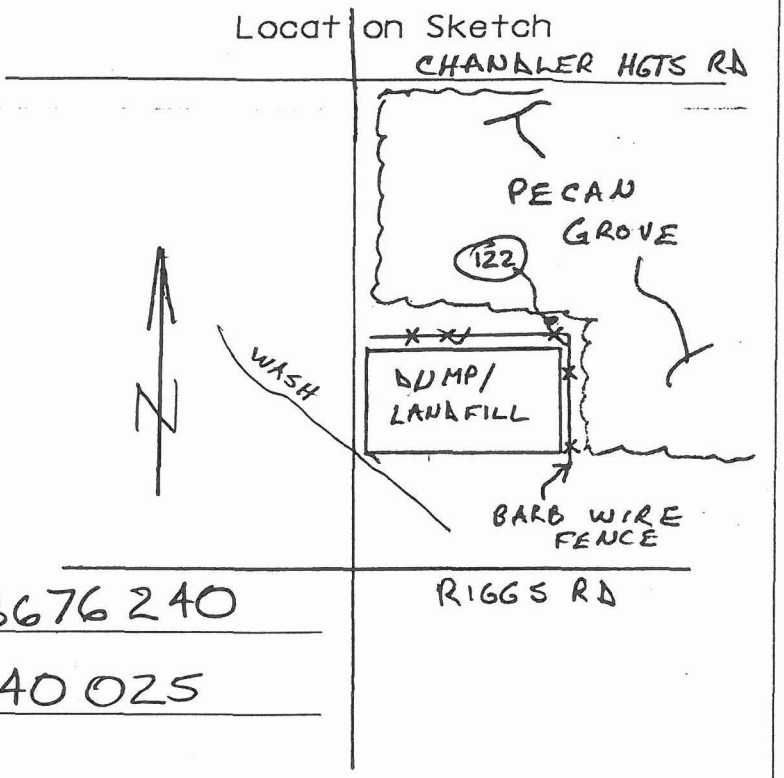

Latitude: 3676240

Longitude: 440025

To Reach: 2000'± N OF RIGGS RD ON HAWES RD, TURN EAST BETWEEN PECAN GROVE + FENCE NORTH OF DUMP, .4 MILE EAST TO IRRIGATION LATERAL RUNNING NORTH/SOUTH, PANEL IS 30'± NW OF RAILROAD TIES AT CORNER OF FENCE

Entry Permit Required: Y ___ N X

Monument Description: SET 1/2" REBAR IN PLASTIC PANEL

Gary Rush 10-21-97

Signature Date

PANEL DATA SHEET

Panel Number: 123

USGS Quad: Chandler Hght Year Monumented: _____

Described By: _____ Year Recovered: _____

State / County: Az / Maricopa

Stamped

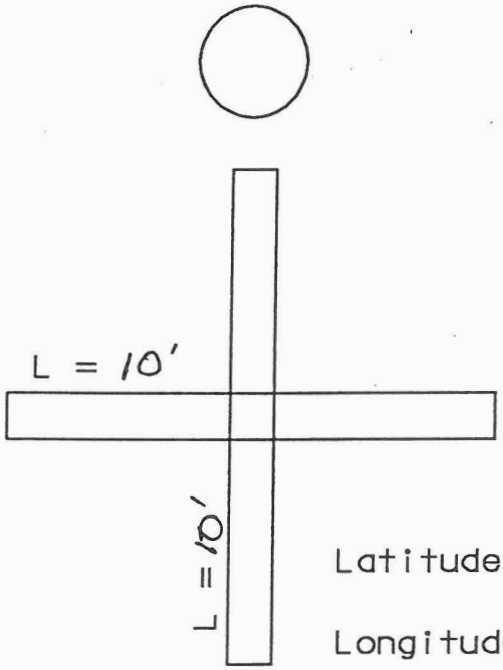

Location Sketch

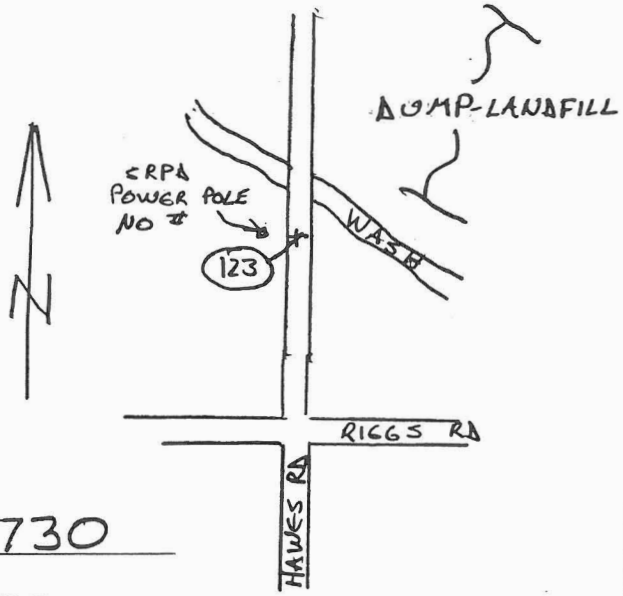

Latitude: 3675730

Longitude: 439400

To Reach: 1000'± NORTH OF RIGGS RD ON HAWES RD ~ SOUTH TOP BANK OF WASH (DIP IN ROAD)

Entry Permit Required: Y ____ N X

Monument Description: SET PK IN SOUTH BOUND LANE

Signature Date

PANEL DATA SHEET

Panel Number: 124

USGS Quad: Chandler Hght Year Monumented: _____

Described By: _____ Year Recovered: _____

State / County: Az / Maricopa

Stamped

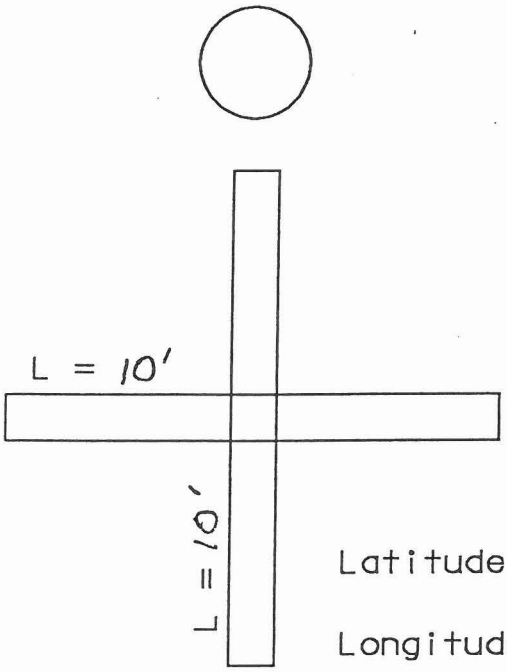

Location Sketch

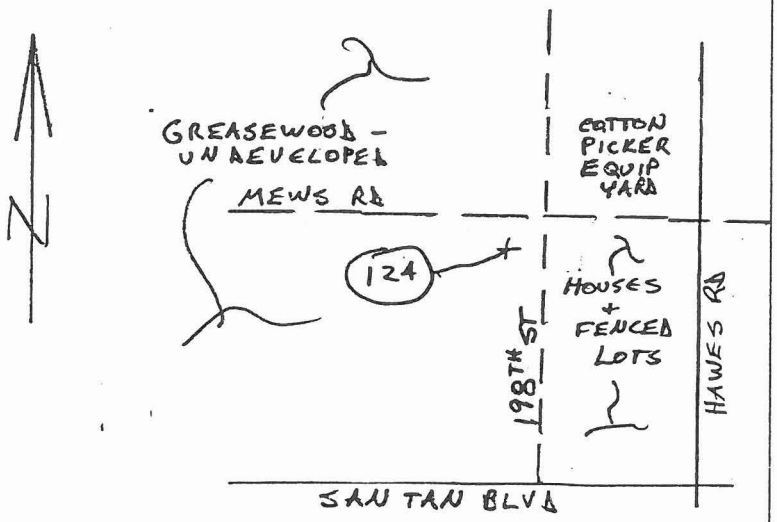

Latitude: 3675200

Longitude: 438935

To Reach: 1/4 MILE NORTH OF SANTAN BLVD ON HAWES RD TO DIRT ROAD RUNNING EAST-WEST. WEST 1/4 MILE TO INTERSECTION DIRT ROADS. PANEL IS ~45' SW OF INTERSECTION

Entry Permit Required: Y ____ N X

Monument Description: SET 1/2" REBAR IN PLASTIC PANEL

Gary Rush — Signature

10-21-97 — Date

PANEL DATA SHEET

Panel Number: 125

USGS Quad: Chandler Hgh Year Monumented: _____

Described By: _____ Year Recovered: _____

State / County: Az / Maricopa

Stamped

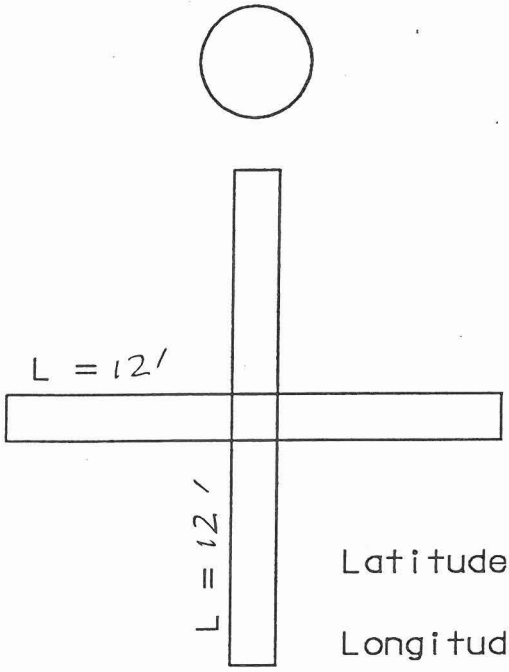

Location Sketch

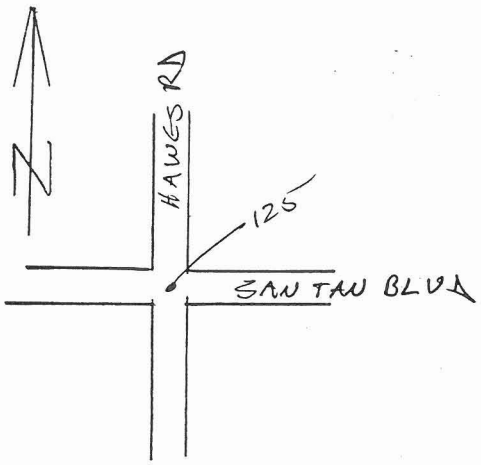

Latitude: 3674795

Longitude: 439290

To Reach: ℄ INTERSECTION HAWES RD & SAN TAN BLVD

Entry Permit Required: Y ___ N X

Monument Description: COTTON SPINDLE (GEAR SPIKE) .3 BELOW PAVEMENT

Gary Rush 10-21-97

Signature Date

PANEL DATA SHEET

Panel Number: 126

USGS Quad: Chandler Hght. Year Monumented: _____

Described By: _____ Year Recovered: _____

State / County: Az / Maricopa

Stamped

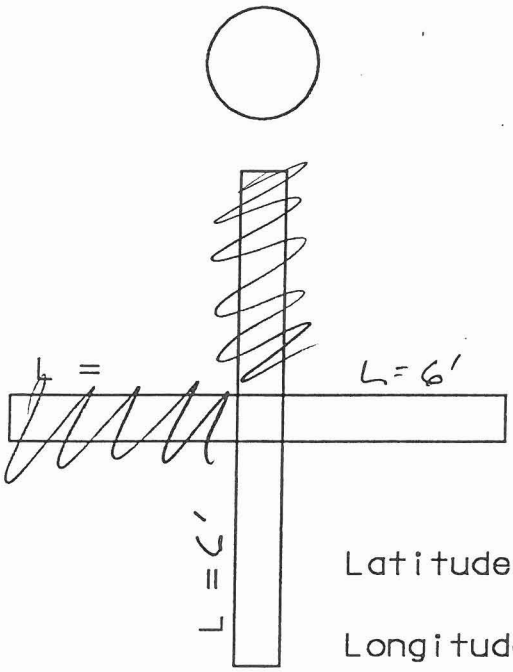

Location Sketch

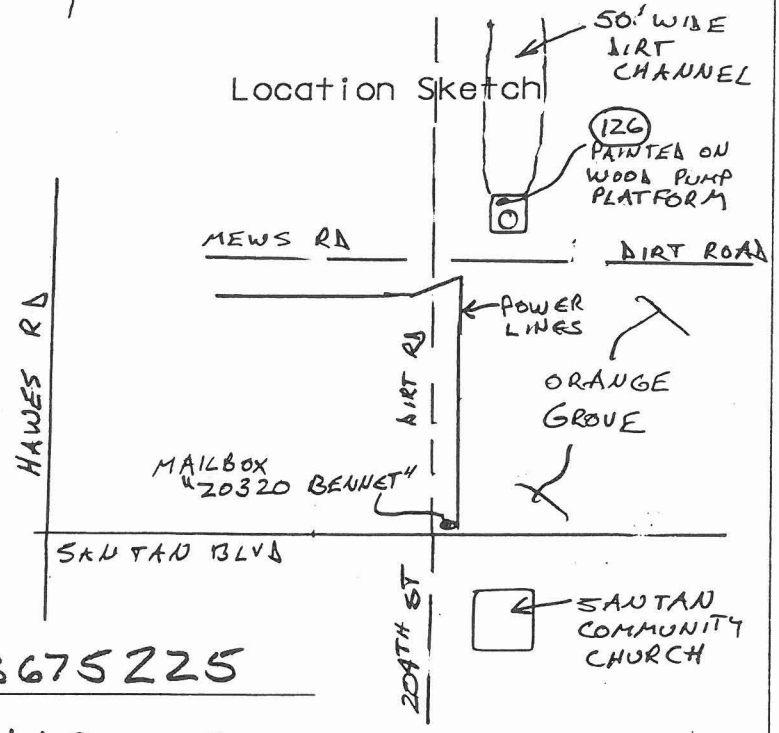

Latitude: 3675225

Longitude: 440125

To Reach: 1/2 MILE EAST ON SANTAN BLVD FROM HAWES RD TO DIRT ROAD RUNNING NORTH & SOUTH. NORTH 1/4 MILE TO INTERSECTION DIRT RDS. PUMP IS AT NE CORNER OF INTERSECTION.

Entry Permit Required: Y____ N____

Monument Description: SET CONCRETE NAIL @ NW COR WOOD PUMP PLATFORM

Signature Date

PANEL DATA SHEET

Panel Number: 127

USGS Quad: Chandler Hght. Year Monumented: _____

Described By: _____ Year Recovered: _____

State / County: Az / Maricopa

Stamped

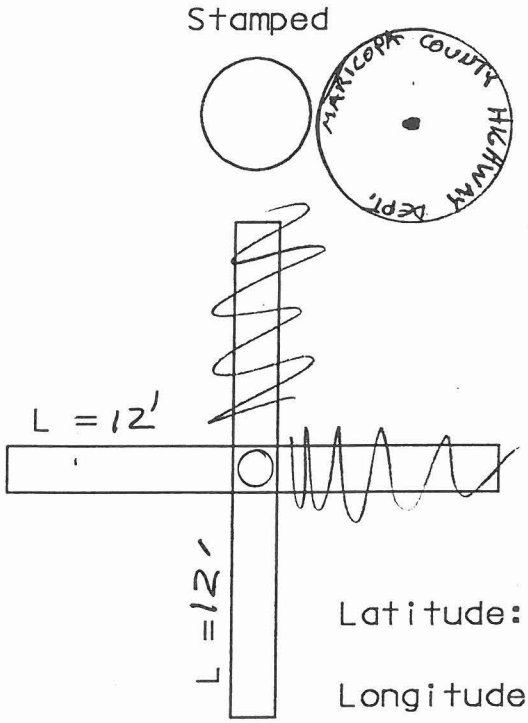

Location Sketch

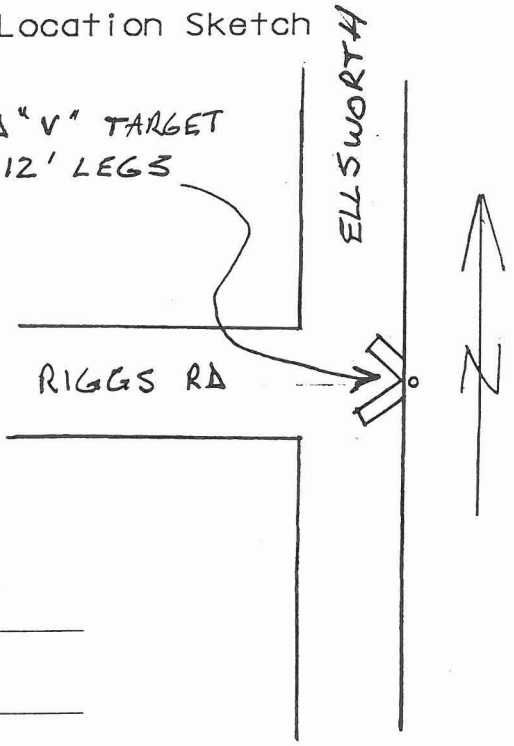

Latitude: 3675615

Longitude: 440935

To Reach: ELLSWORTH RD + RIGGS RD : EAST EDGE PVMT
ELLSWORTH @ & RIGGS TO THE WEST

Entry Permit Required: Y ____ N ____

Monument Description: BC IN HH

Gary Rudd 10-21-97

Signature Date

PANEL DATA SHEET

Panel Number: 128

USGS Quad: Chandler Hght. Year Monumented: _____

Described By: _____ Year Recovered: _____

State / County: Az / Maricopa

Stamped

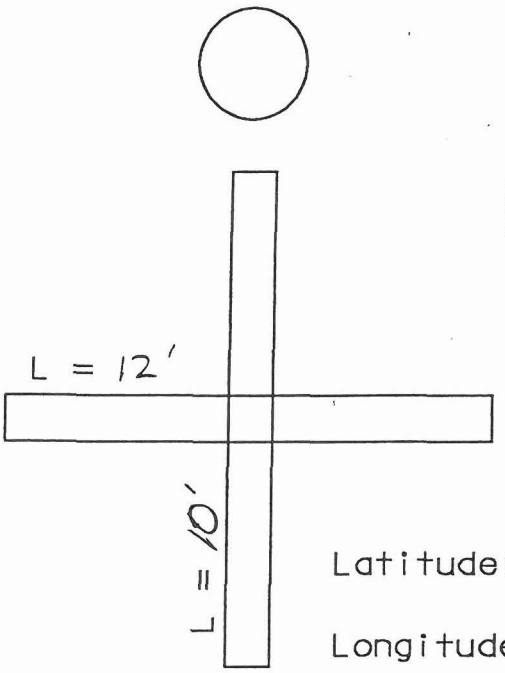

Location Sketch

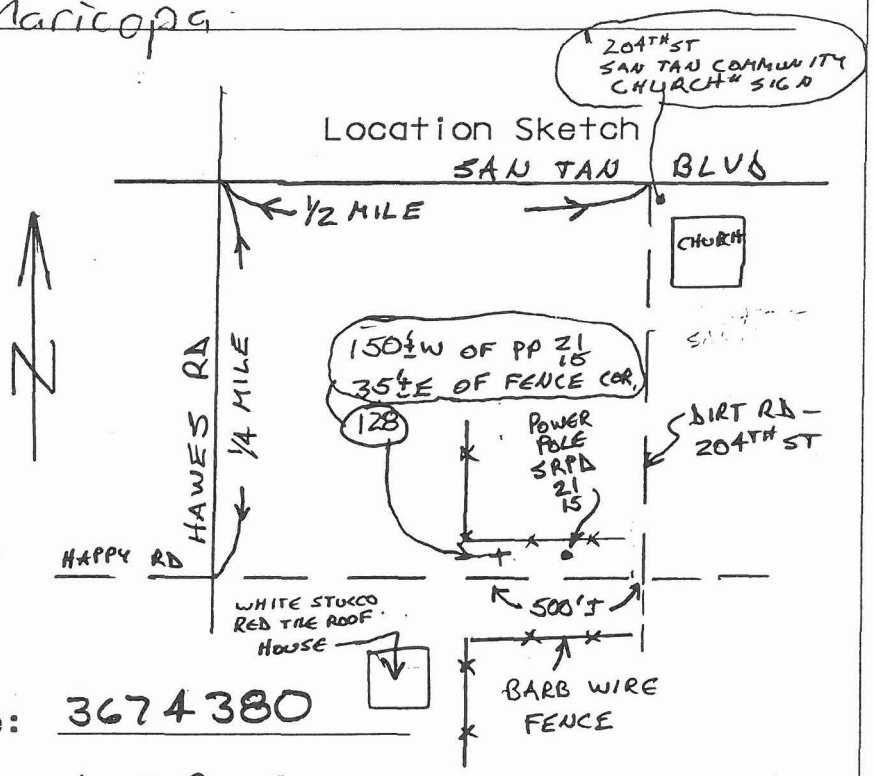

Latitude: 3674380

Longitude: 439875

To Reach: SANTAN BLVD E 1/2 MILE FROM HAWES RD TO DIRT RD RUNNING SOUTH GO 1/4 MILE SOUTH TO INTERSECTION DIRT RDS. 500' WEST ON UNMARKED DIRT RD WHICH IS HAPPY RD

Entry Permit Required: Y ____ N X

Monument Description: SET 1/2 REBAR IN PLASTIC PANEL

Gary Rush 10-21-97

Signature Date

PANEL DATA SHEET

Panel Number: 129

USGS Quad: Chandler Hght Year Monumented: _____

Described By: _____ Year Recovered: _____

State / County: Az / Maricopa

Stamped

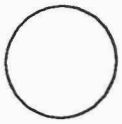

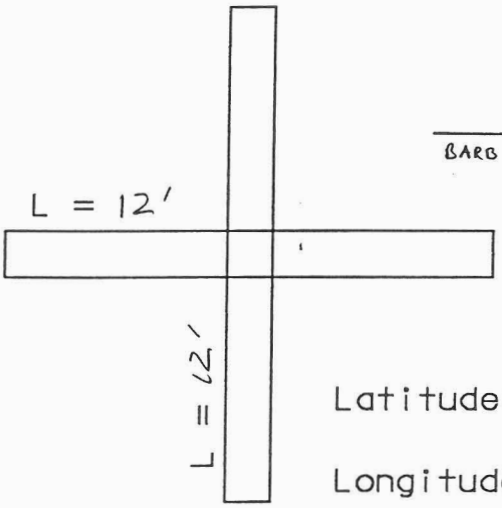

Location Sketch

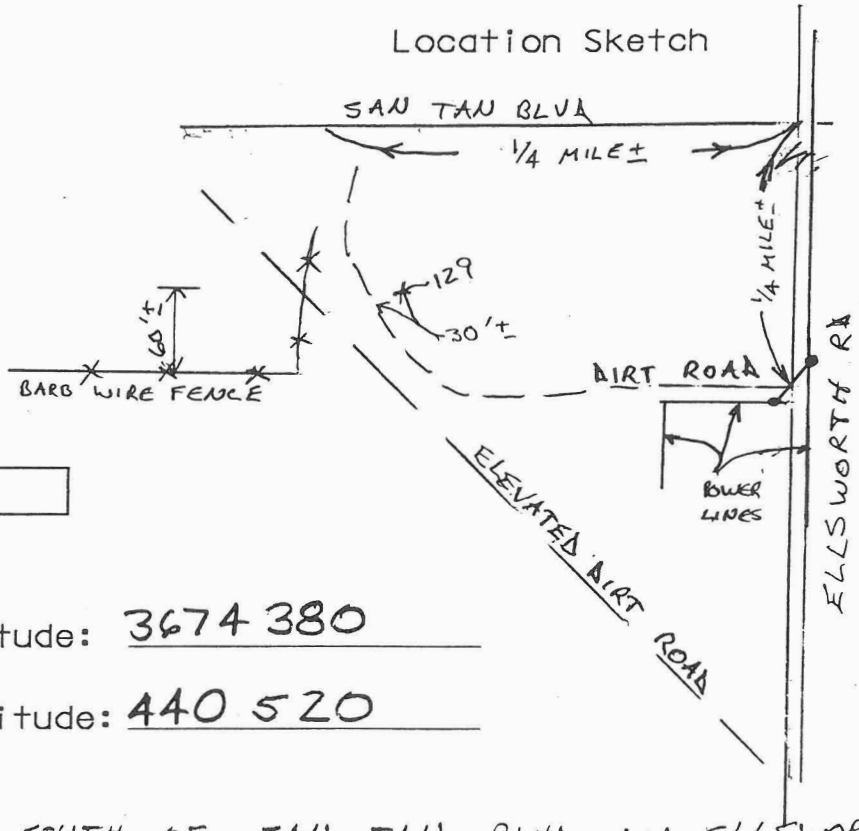

Latitude: 3674380

Longitude: 440520

To Reach: 1/4 MILE SOUTH OF SAN TAN BLVD ON ELLSWORTH RD TO DIRT RD GOING WEST. WEST 1/4 MILE TO DIRT EMBANKMENT

Entry Permit Required: Y ____ N X

Monument Description: SET 1/2" REBAR IN PLASTIC PANEL

Signature

10-21-97
Date

PANEL DATA SHEET

Panel Number: 130

USGS Quad: Chandler Hght. Year Monumented: _____

Described By: _____ Year Recovered: _____

State / County: Az / Maricopa

Stamped

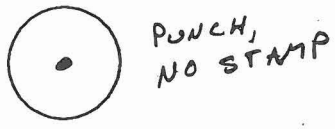

Location Sketch

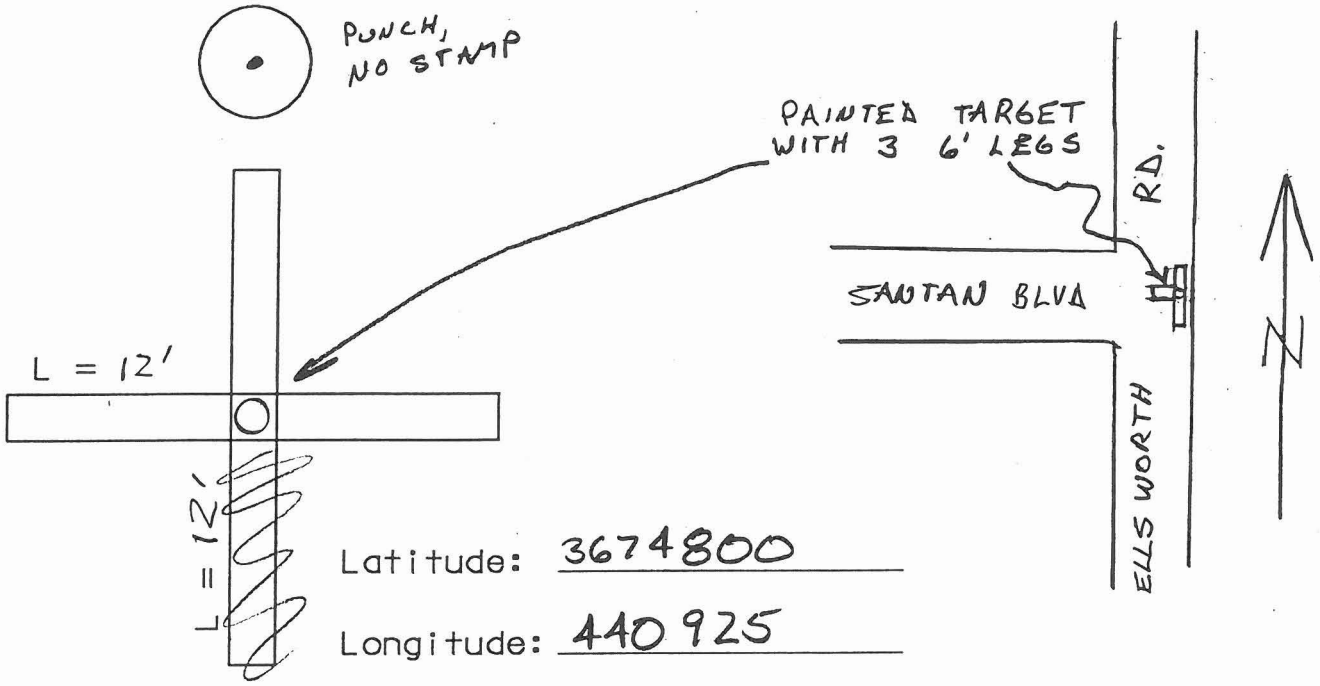

Latitude: 3674800

Longitude: 440925

To Reach: ELLSWORTH RD AT SANTAN BLVD, EAST EDGE PAVEMENT ELLSWORTH AT ℄ SANTAN TO THE WEST

Entry Permit Required: Y ____ N X

Monument Description: BRASS CAP IN HANDHOLE

Signature

10-21-97
Date

PANEL DATA SHEET

Panel Number: 131

USGS Quad: Chandler Hght Year Monumented: _____

Described By: _____ Year Recovered: _____

State / County: Az/Maricopa

Stamped

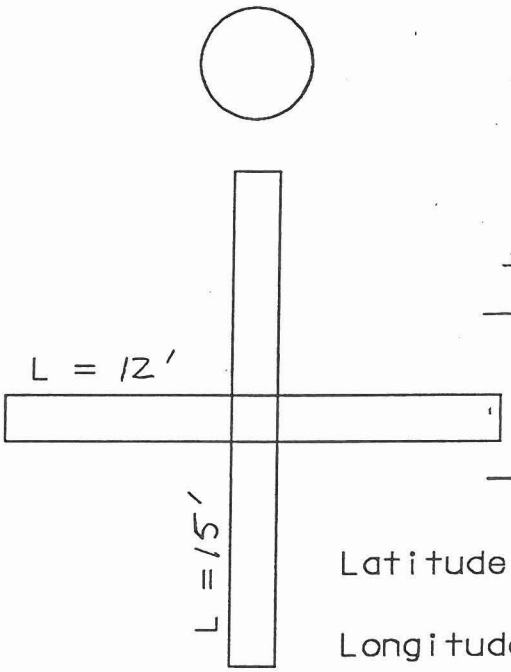

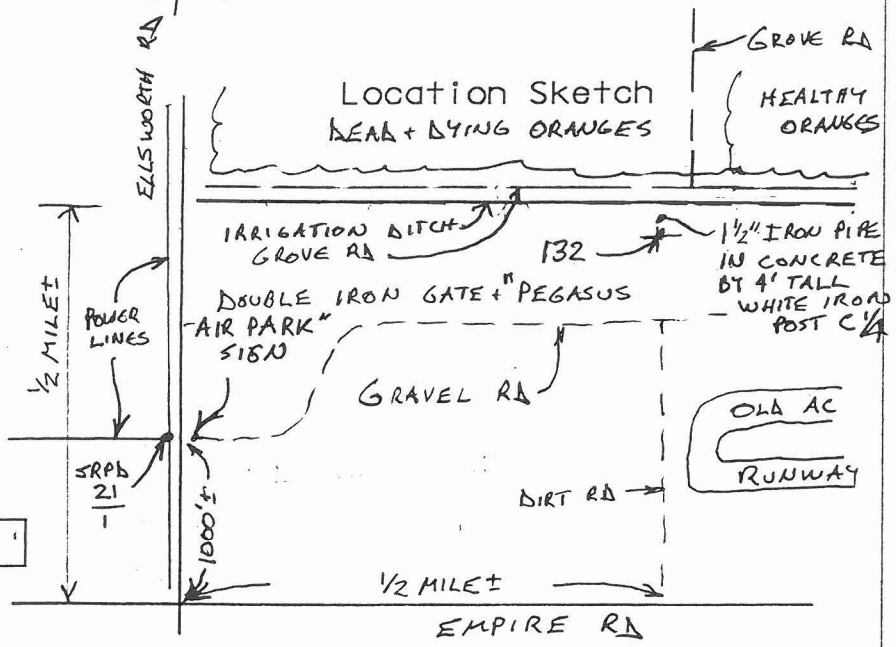

Latitude: 3674775

Longitude: 441670

To Reach: 1000' NORTH OF EMPIRE RD ON ELLSWORTH THROUGH DOUBLE IRON GATES, NORTH + EAST, ON GRAVEL RD ½ MILE± EAST OF ELLSWORTH, 60'± SOUTH OF ORANGE GROVE, 150'± N. OF GRAVEL RD.

Entry Permit Required: Y ___ N X

Monument Description: SET ½" REBAR IN PLASTIC PANEL 10'± SOUTH OF 4' TALL WHITE IRON POST (PRESUMED CENTER OF SECTION MONUMENT)

Signature: [signature] Date: 10-21-97

PANEL DATA SHEET

Panel Number: 132

USGS Quad: CHANLER HEIGHTS Year Monumented: _____

Described By: _____ Year Recovered: _____

State / County: _____

Stamped

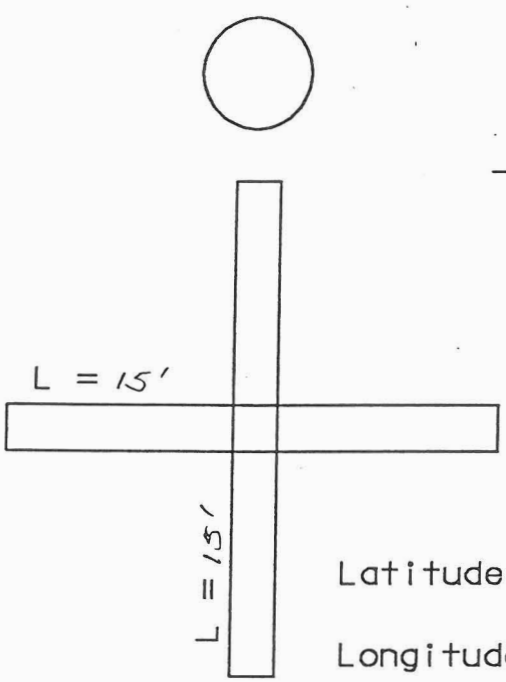

Location Sketch

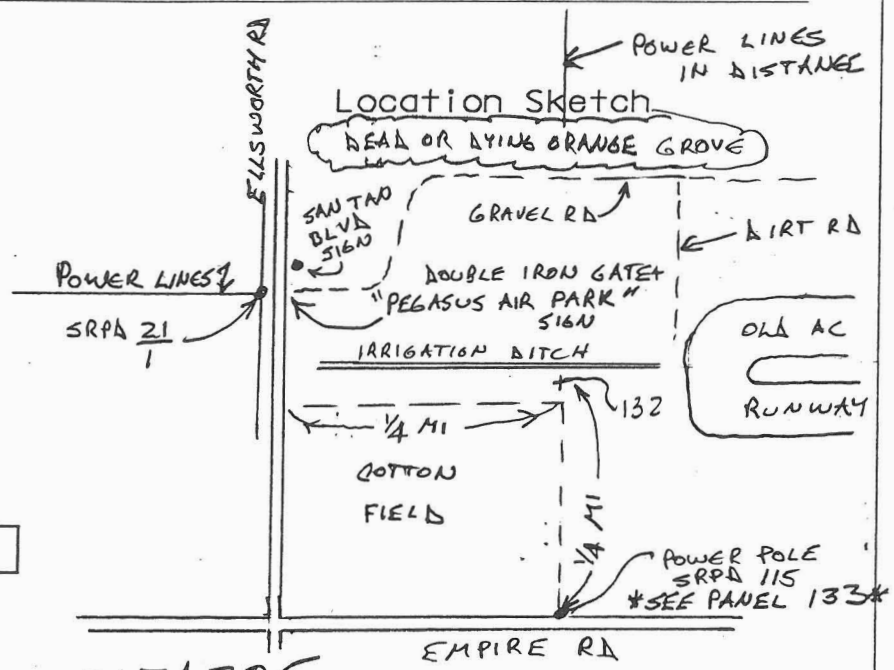

Latitude: 3674385

Longitude: 441300

To Reach: 1000'± NORTH ON ELLSWORTH FROM EMPIRE RD, EAST THROUGH DOUBLE IRON GATE BY "PEGASUS AIR PARK" SIGN FOLLOW GRAVEL RD NORTH + EAST TO A DIRT RD RUNNING SOUTH, ~2000' EAST OF ELLSWORTH, SOUTH TO IRRIGATION DITCH, WEST TO PANEL

Entry Permit Required: Y ___ N X

Monument Description: SET 1/2 REBAR @ & PLASTIC PANEL

Signature: [signature] Date: 10-21-9

PANEL DATA SHEET

Panel Number: 132 X WRONG LOCATION!

USGS Quad: Chandler Hght. Year Monumented: _____

Described By: _____ Year Recovered: _____

State / County: Az/Maricopa

Stamped

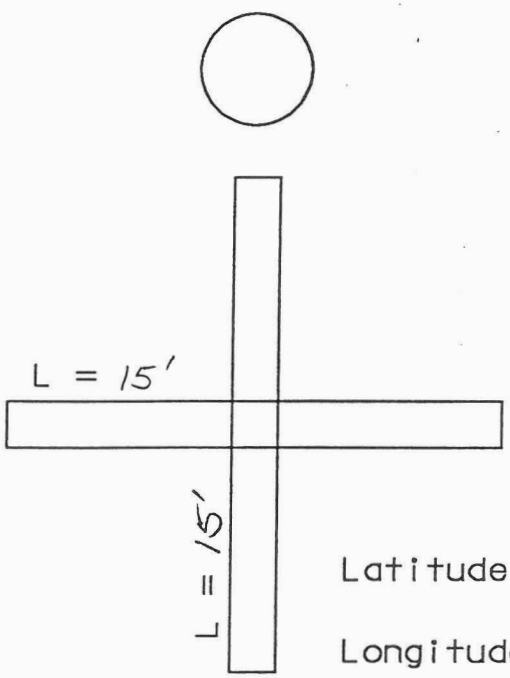

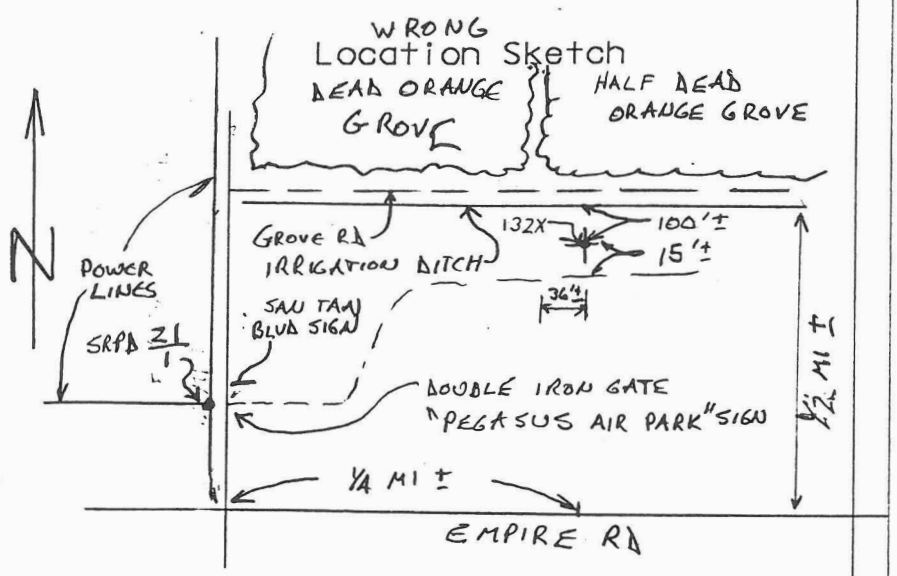

Latitude: 3674385

Longitude: 441300

To Reach: _____

Entry Permit Required: Y ___ N X

Monument Description: FOUND REBAR IN OLD AIR PANEL, SET NEW PLASTIC

Signature 10-21-97 Date

PANEL DATA SHEET

Panel Number: 133

USGS Quad: Chandler Hght. Year Monumented: _____

Described By: _____ Year Recovered: _____

State / County: Az/Maricopa

Stamped

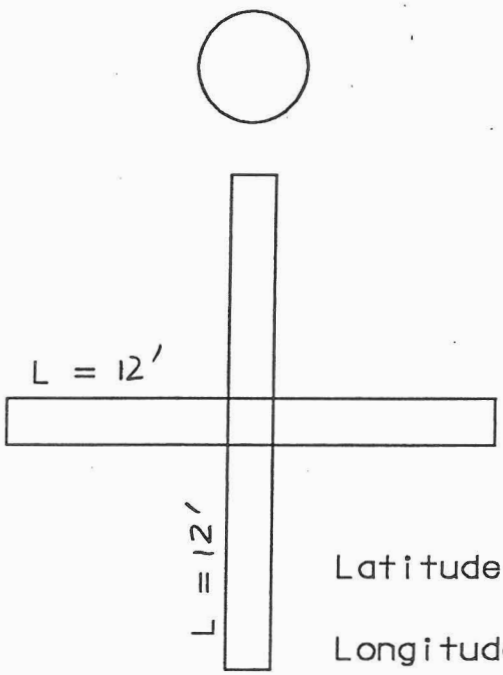

Location Sketch

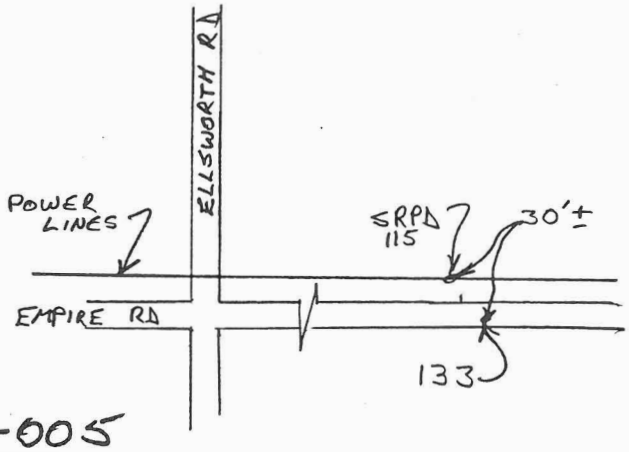

Latitude: 3674005

Longitude: 441335

To Reach: EMPIRE RD 1/4 MI EAST OF ELLSWORTH

Entry Permit Required: Y ____ N ____

Monument Description: SET PK IN EASTBOUND LANE

Signature 10-21-97 Date

PANEL DATA SHEET

Panel Number: 134

USGS Quad: Chandler Hght Year Monumented: _____

Described By: _____ Year Recovered: _____

State / County: Az / Maricopa

Stamped

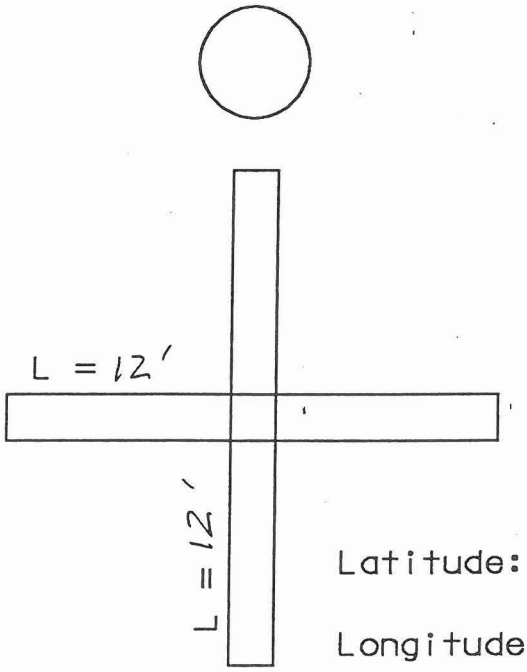

Location Sketch

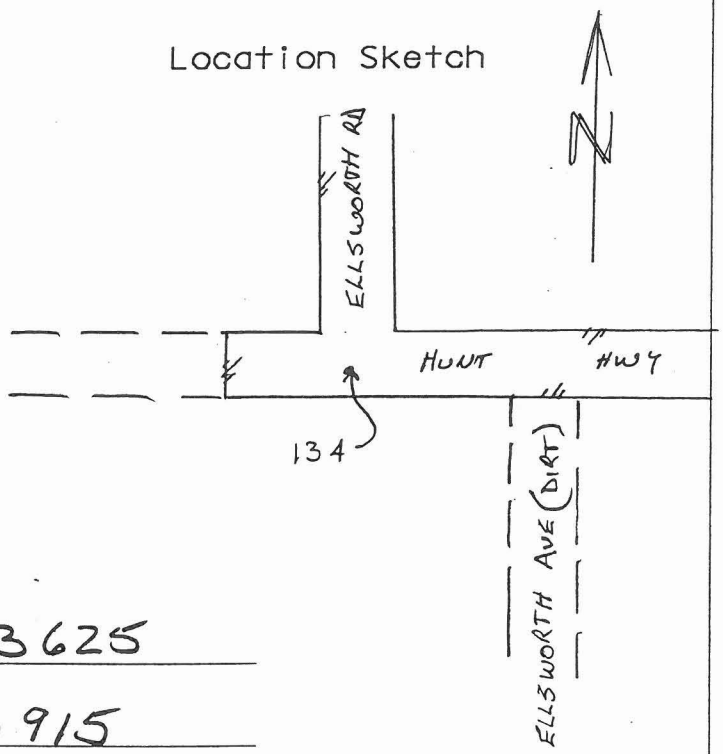

Latitude: 3673625

Longitude: 440915

To Reach: ELLSWORTH RD @ HUNT HIGHWAY

Entry Permit Required: Y ___ N X

Monument Description: SET PK IN ASPHALT

Gary Rich 10-21-97

Signature Date

PANEL DATA SHEET

Panel Number: 200

USGS Quad: HIGLEY Year Monumented: _____

Described By: _____ Year Recovered: _____

State / County: AZ / MARICOPA

Stamped

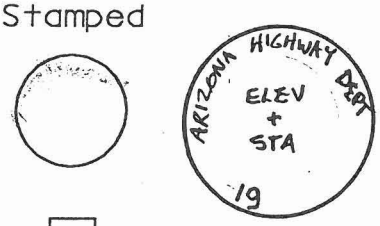

Location Sketch

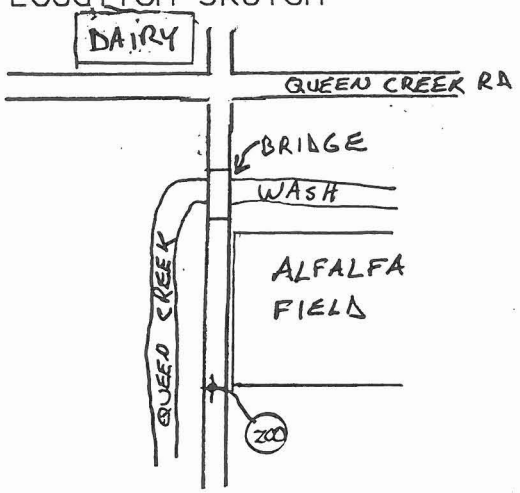

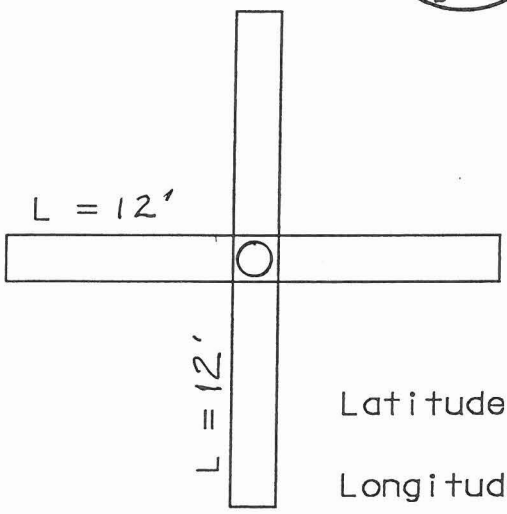

Latitude: 3679650 N,

Longitude: 432925 E,

To Reach: HIGLEY RD 1/4 MI SOUTH OF QUEEN CREEK WASH

Entry Permit Required: Y ____ N X

Monument Description: ADOT BC IN HANDHOLE

Signature

10-14-97
Date

PANEL DATA SHEET

Panel Number: 202

USGS Quad: HIGLEY Year Monumented: _____

Described By: _____ Year Recovered: _____

State / County: AZ/Maricopa

Stamped

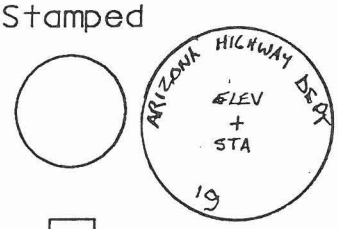

Location Sketch

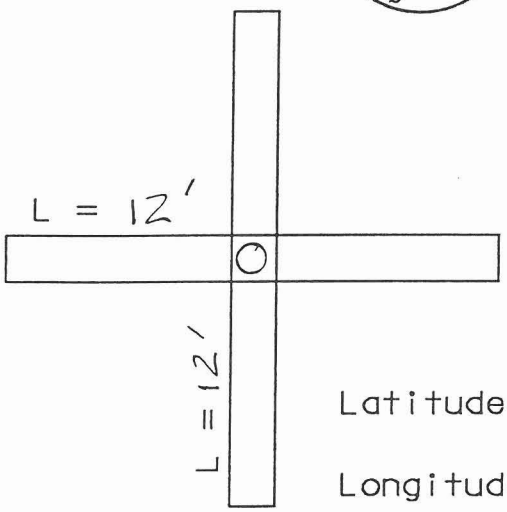

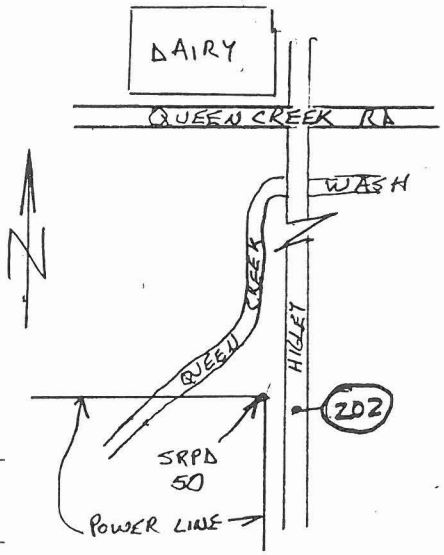

Latitude: 3678880 N

Longitude: 432945 E

To Reach: HIGLEY RD 1 MILE S. OF QUEEN CREEK RD
(OCOTILLO RD IS UNMAINTAINED DIRT)

Entry Permit Required: Y ____ N X

Monument Description: ADOT BC IN HH

Gary Rush 10-14-97

Signature Date

PANEL DATA SHEET

Panel Number: 201

USGS Quad: CHANDLER HTS Year Monumented: _____

Described By: _____ Year Recovered: _____

State / County: Az. / Maricopa

Stamped

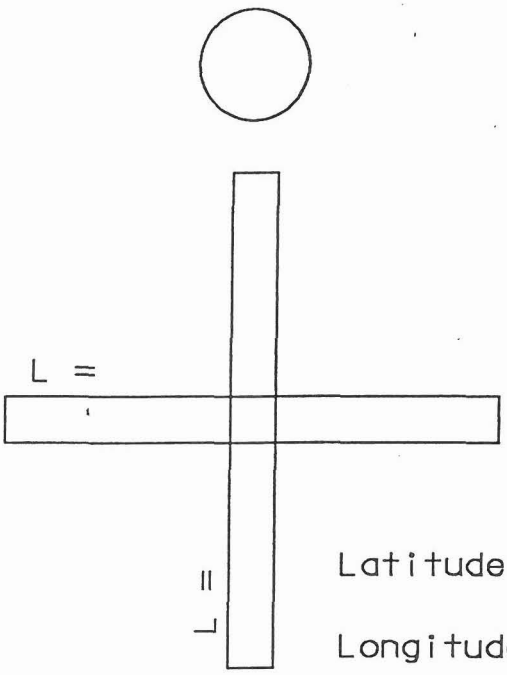

Location Sketch

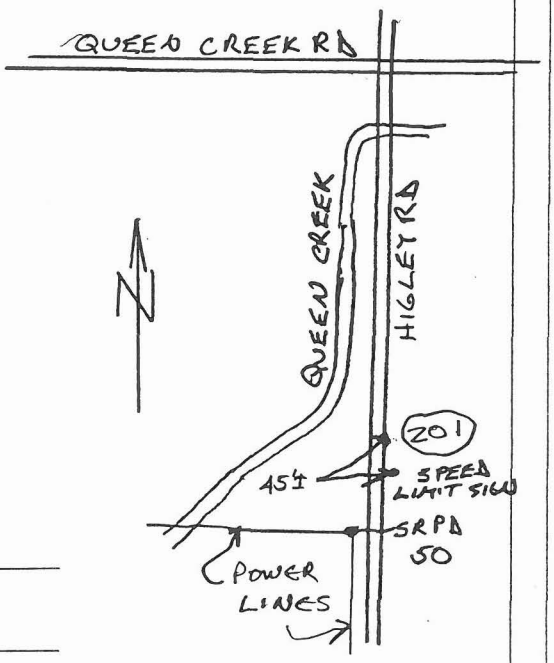

Latitude: 3679100

Longitude: 432925

To Reach: HIGLEY RD 7/8 MILE S. OF QUEEN CREEK RD

Entry Permit Required: Y ___ N X

Monument Description: SET PK IN ASPHALT AT EDGE NORTH-BOUND LANE

Signature 10-14-97 Date

PANEL DATA SHEET

Panel Number: 203

USGS Quad: Chandler Hght Year Monumented: _____

Described By: _____ Year Recovered: _____

State / County: Az/Maricopa

Stamped

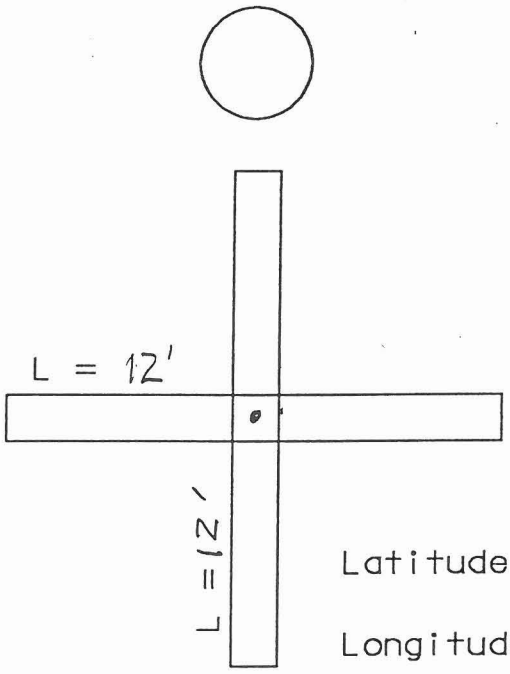

Location Sketch

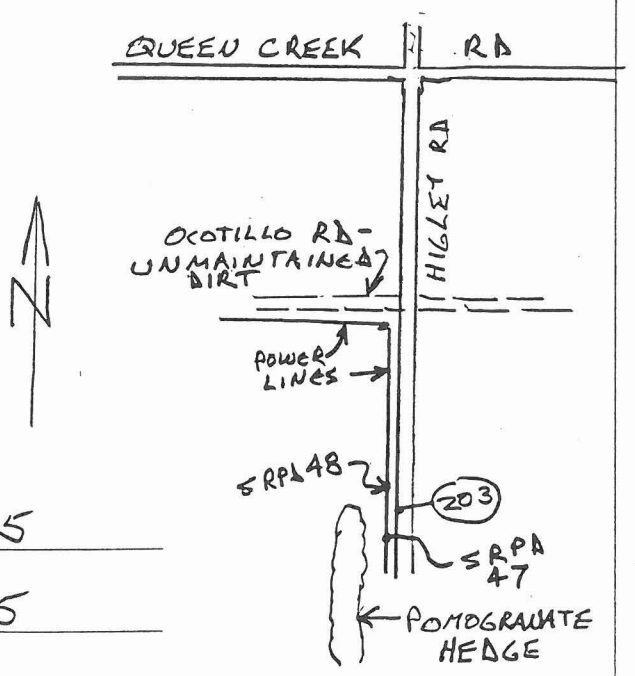

Latitude: 3678615

Longitude: 432945

To Reach: HIGLEY RD 1/8 MILE S. OF QUEEN CREEK RD

Entry Permit Required: Y ____ N X

Monument Description: SET PK EDGE OF SOUTH BOUND LANE

Signature 10-14-97 Date

PANEL DATA SHEET

Panel Number: 204

USGS Quad: Chandler Hght. Year Monumented: _____

Described By: _____ Year Recovered: _____

State / County: Az / Maricopa

Stamped

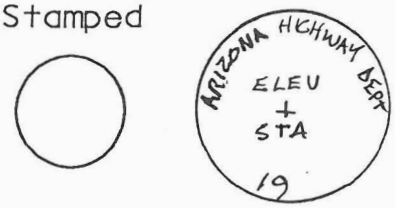

Location Sketch

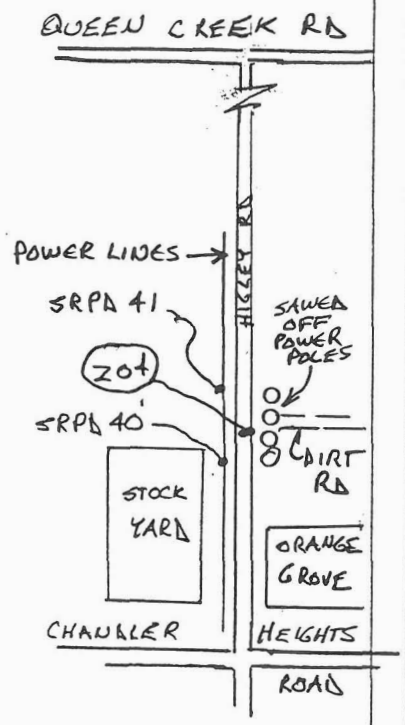

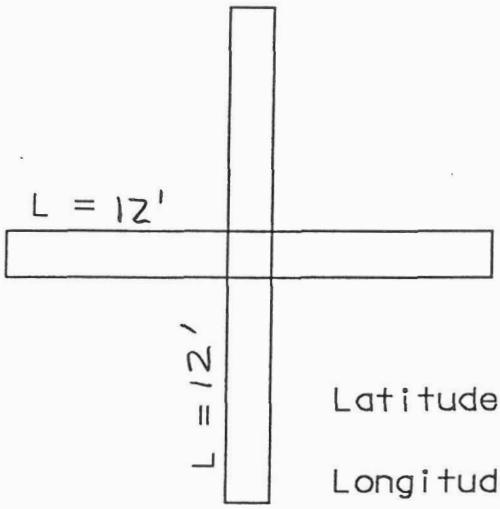

Latitude: 3678050

Longitude: 432 945

To Reach: HIGLEY RD 1/2 MILE N. OF CITRUS HEIGHTS ROAD

Entry Permit Required: Y ____ N X

Monument Description: ADOT BC IN HH

Gary Rush
Signature

10-14-97
Date

PANEL DATA SHEET

Panel Number: 205

USGS Quad: Chandler Hght. Year Monumented: _____

Described By: _____ Year Recovered: _____

State / County: Az/Maricopa

Stamped

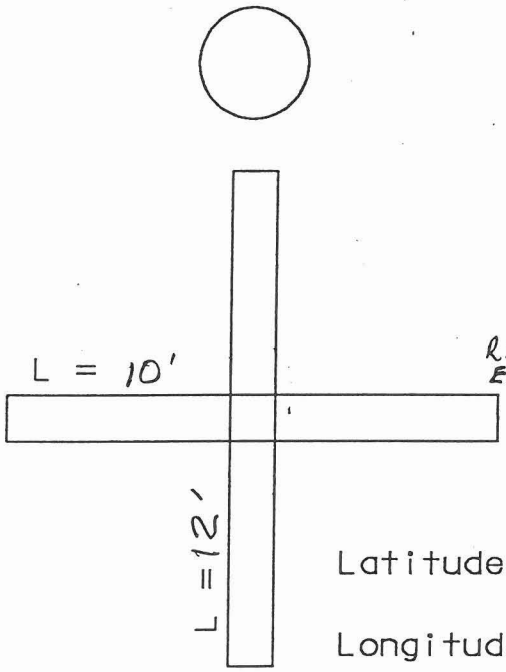

Location Sketch

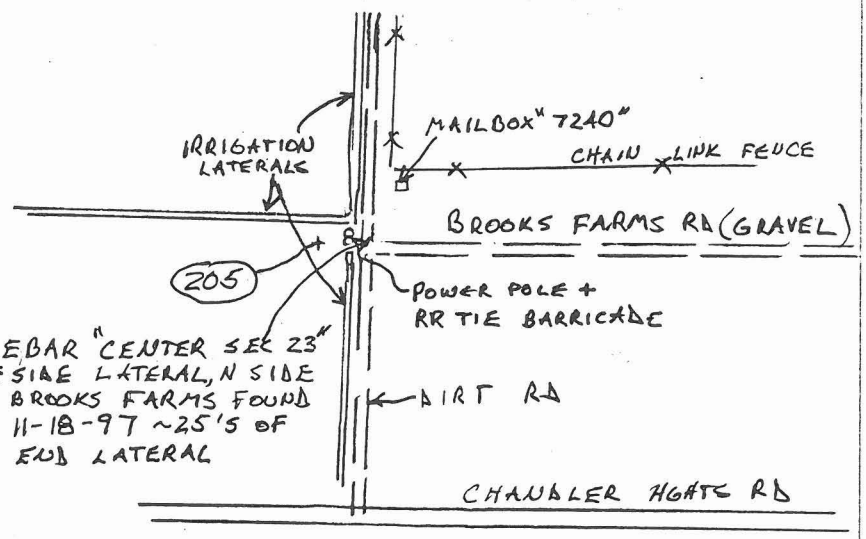

Latitude: 3678055

Longitude: 433750

To Reach: BROOKS FARMS RD 1/2 MILE WEST OF RECKER RD. (DIRT), 1/2 MILE NORTH OF CHANDLER HEIGHTS RD. SET PANEL 15'± WEST OF BARRICADE, 20' S. OF LATERAL

Entry Permit Required: Y ___ N X

Monument Description: SET 1/2" REBAR IN PLASTIC PANEL

Gary Rusch — 10-23-97

Signature — Date

PANEL DATA SHEET

Panel Number: 206

USGS Quad: HIGLEY Year Monumented: _____

Described By: _____ Year Recovered: _____

State / County: AZ/Maricopa

Stamped

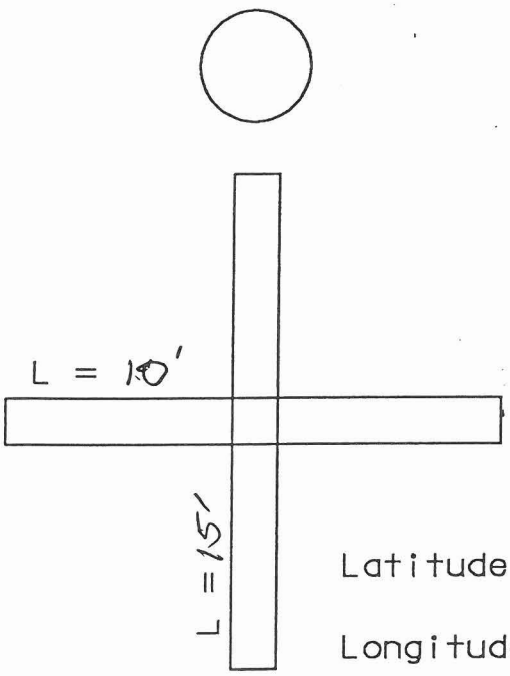

Location Sketch

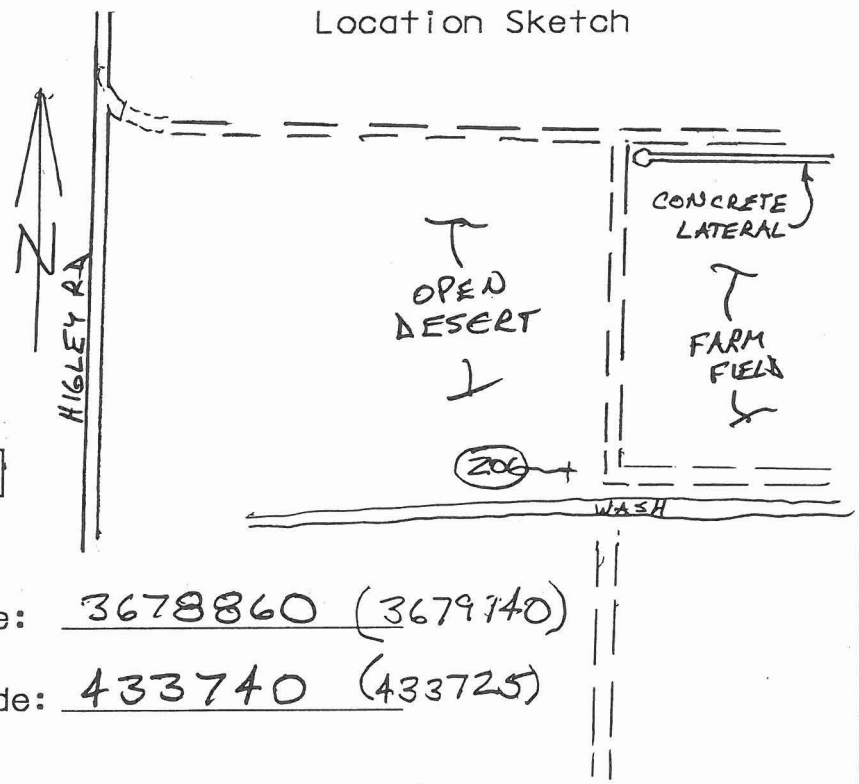

Latitude: 3678860 (3679140)

Longitude: 433740 (433725)

To Reach: 1/2 MILE SOUTH OF QUEEN CREEK RD ON HIGLEY, TAKE DIRT ROAD 1/2 MILE EAST + 1/2 MILE SOUTH TO NORTH BANK OF WASH. SET PANEL ~20' N. OF TOP BANK, 30' WEST OF 90° TURN IN DIRT ROAD

Entry Permit Required: Y ___ N X

Monument Description: SET 1/2" REBAR IN PLASTIC PANEL

Signature 10-23-97 Date

PANEL DATA SHEET

Panel Number: 207

USGS Quad: Chandler Hght. Year Monumented: _____

Described By: _____ Year Recovered: _____

State / County: Az/Maricopa

Stamped

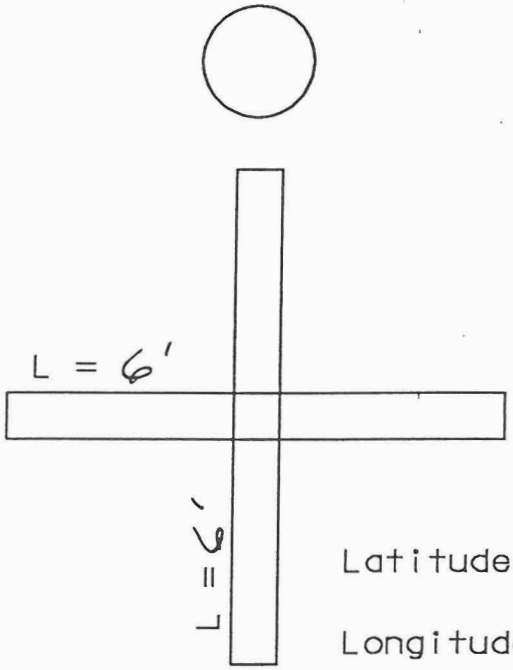

Location Sketch

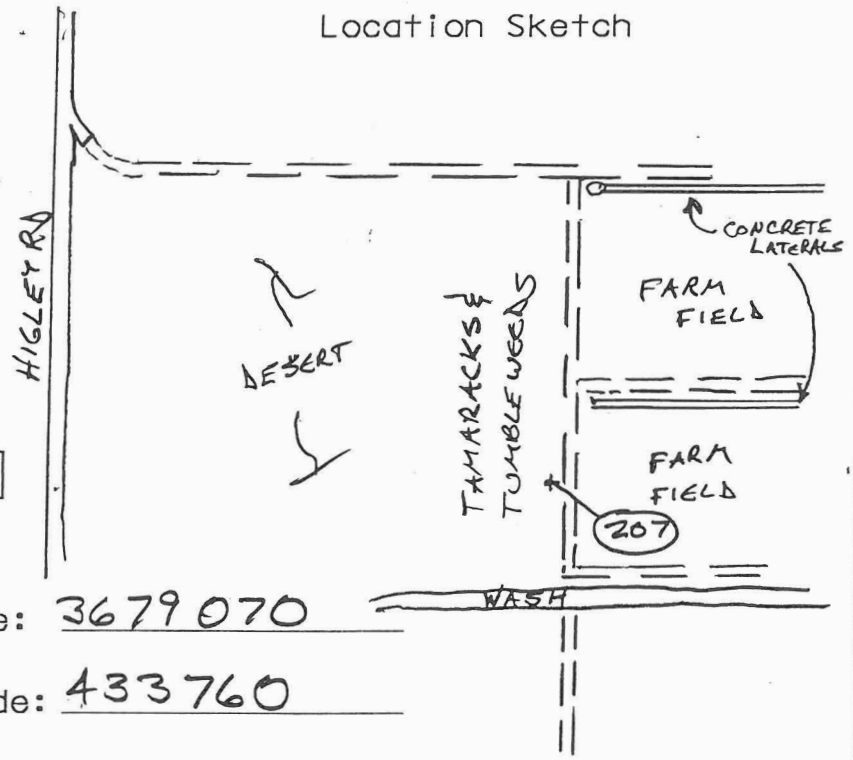

Latitude: 3679070

Longitude: 433760

To Reach: 1/2 MILE SOUTH OF QUEEN CREEK RD ON HIGLEY, TAKE DIRT ROADS 1/2 MILE EAST + .4 MILE SOUTH TO POINT ~500' NORTH OF NORTH BANK OF WASH, 600'± S. OF DIRT RD RUNNING EAST, SET AT WEST EDGE ROAD, ~50' EAST OF SINGLE TALL MESQUITE TREE

Entry Permit Required: Y ___ N X

Monument Description: SET 1/2" REBAR IN PLASTIC PANEL

Signature

10-23-97
Date

PANEL DATA SHEET

Panel Number: 208

USGS Quad: HIGLEY Year Monumented: _____

Described By: _____ Year Recovered: _____

State / County: AZ/Maricopa

Stamped

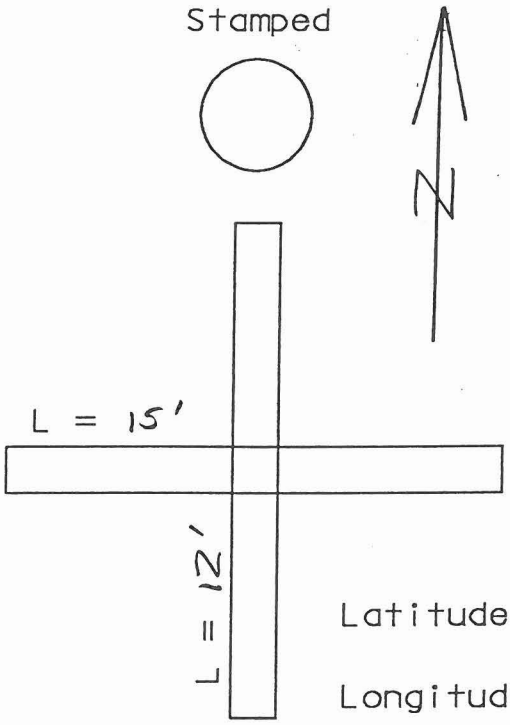

Location Sketch

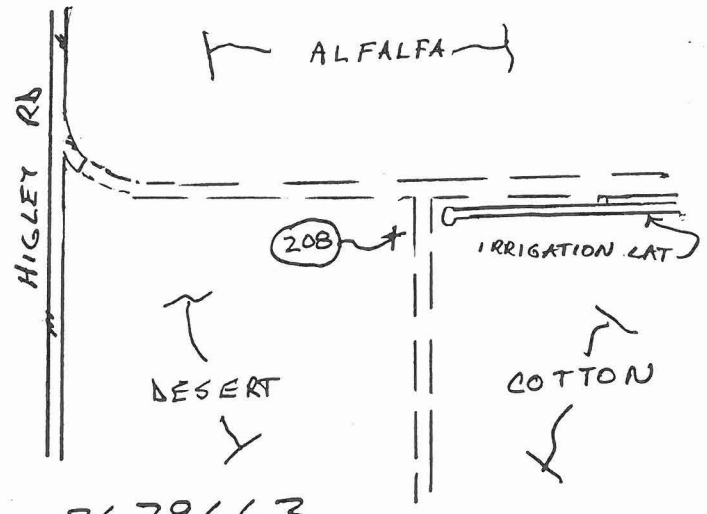

Latitude: 3679663

Longitude: 433760

To Reach: 1/2 MILE SOUTH OF QUEEN CREEK ROAD ON HIGLEY, GO 1/2 MILE EAST ON FARM ROAD, SET PANEL 25'± SOUTH + 20'± WEST OF END CONCRETE IRRIGATION LATERAL

Entry Permit Required: Y ___ N X

Monument Description: SET 1/2" REBAR IN PLASTIC PANEL

Gary Rush 10-23-97

Signature Date

PANEL DATA SHEET

Panel Number: 209

USGS Quad: HIGLEY Year Monumented: _____

Described By: _____ Year Recovered: _____

State / County: Az / Maricopa

Stamped

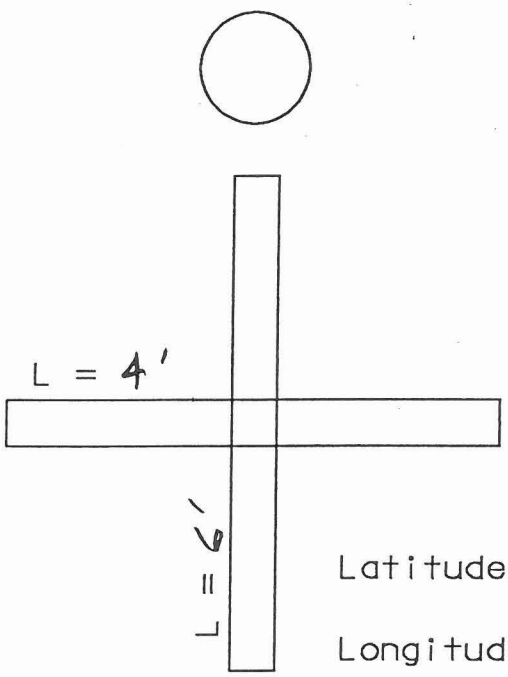

Location Sketch

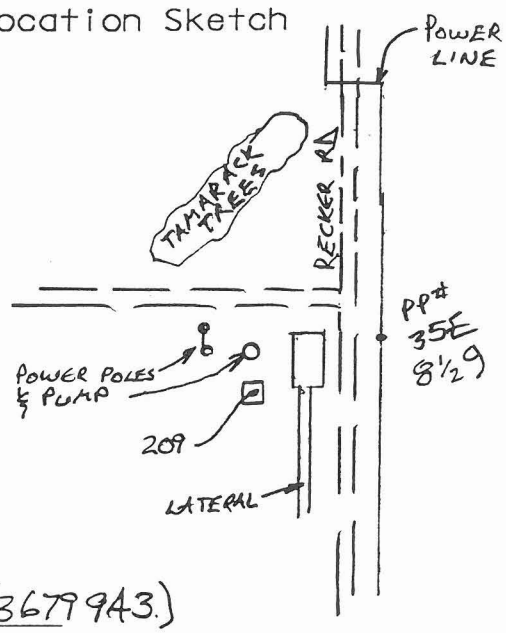

Latitude: 3679685 (3679943)

Longitude: 434550 434522

To Reach: RECKER ROAD (DIRT) ½ MILE SOUTH OF QUEEN CREEK ROAD. TO REACH: TAKE DIRT ROAD THAT RUNS EAST FROM HIGLEY 1 MILE

Entry Permit Required: Y ____ N X

Monument Description: PAINTED PANEL ON TOP OF 6'x4' CONCRETE PAD. TBM EL = 1336.45" PAINTED BY OTHERS ON PAD. HOLE IN CONCRETE AT CENTER

Gary Rush 10-23-97

Signature Date

PANEL DATA SHEET

Panel Number: 210

USGS Quad: HIGLEY Year Monumented: _____

Described By: _____ Year Recovered: _____

State / County: Az / Maricopa

Stamped

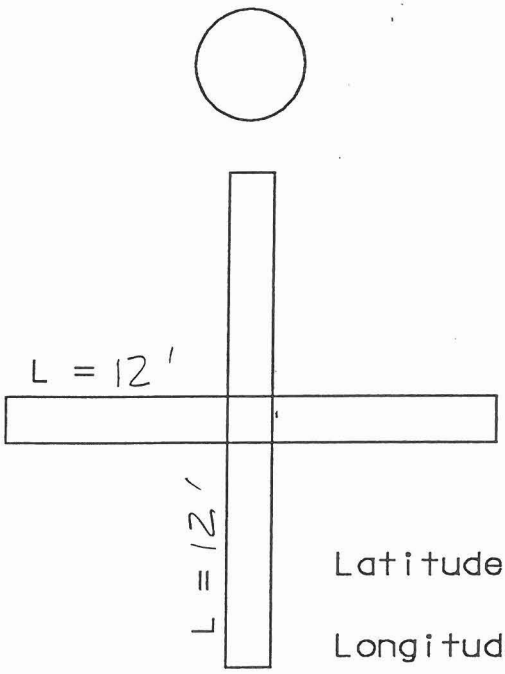

Location Sketch

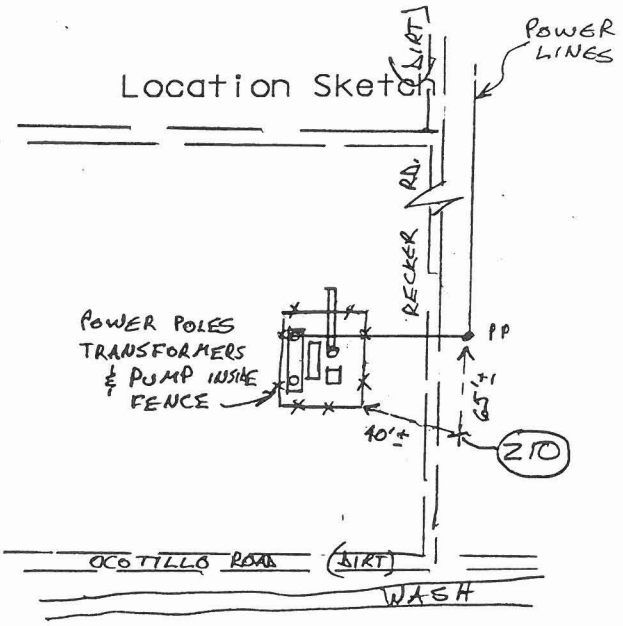

Latitude: 3679075

Longitude: 434550

To Reach: 1/2 MILE SOUTH OF QUEEN CREEK RD ON HIGLEY TAKE DIRT ROAD THAT RUNS EAST 1 MILE TO RECKER ROAD (DIRT) THEN .35 MILES SOUTH ON RECKER TO A POINT ~600' NORTH OF WASH. PANEL IS AT EAST EDGE ROAD

Entry Permit Required: Y ___ N X

Monument Description: SET 1/2" REBAR IN PLASTIC PANEL

Signature

10-23-97
Date

PANEL DATA SHEET

Panel Number: 211

USGS Quad: Chandler Hght Year Monumented: _____

Described By: _____ Year Recovered: _____

State / County: Az / Maricopa

Stamped

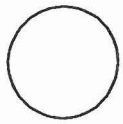

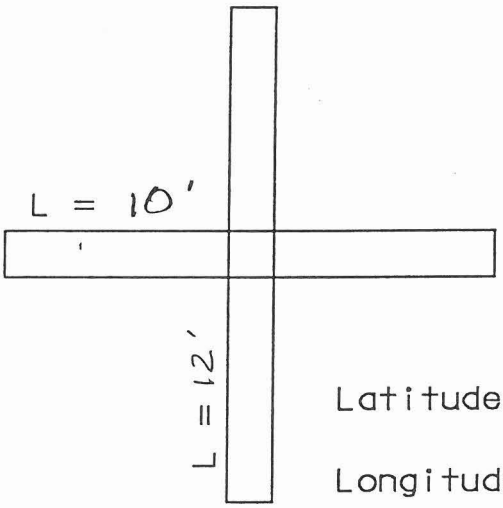

Location Sketch

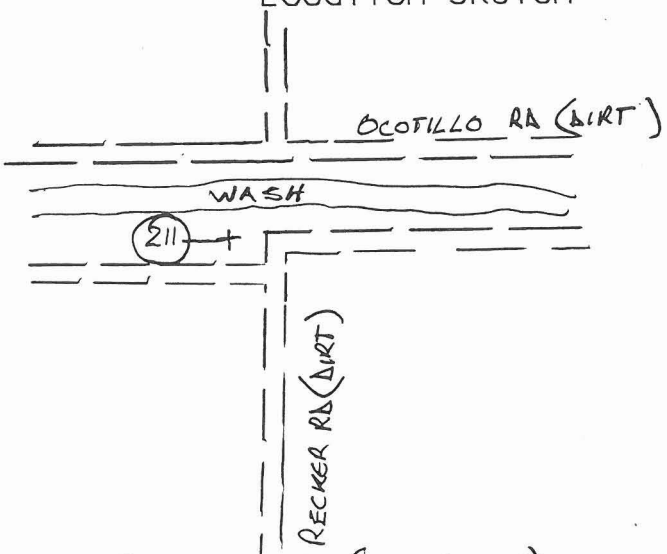

Latitude: 3678875 (3679075)

Longitude: 434550 (434539)

To Reach: RECKER RD (DIRT) 1 MILE NORTH OF CHANDLER HEIGHTS ROAD AT SOUTH BANK OF WASH

Entry Permit Required: Y ____ N X

Monument Description: SET 1/2" REBAR IN PLASTIC PANEL

Gary Rush 10-23-97

Signature Date

PANEL DATA SHEET

Panel Number: 212

USGS Quad: Chandler Hght Year Monumented: _____

Described By: _____ Year Recovered: _____

State / County: Az/Maricopa

Stamped

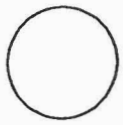

Location Sketch

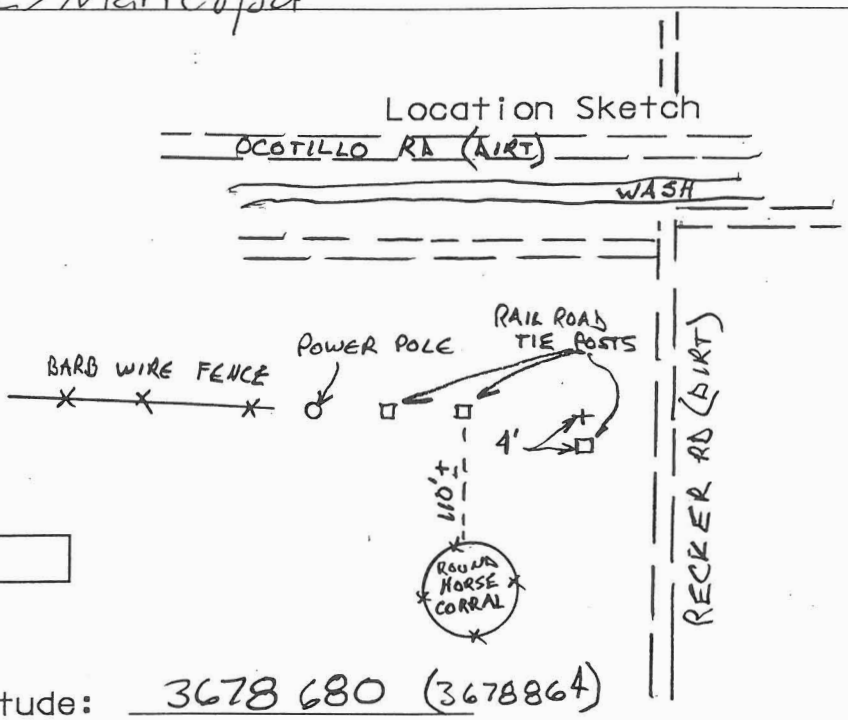

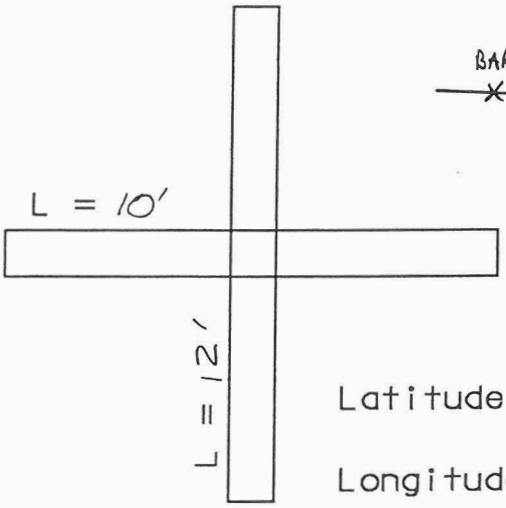

Latitude: 3678 680 (3678864)

Longitude: 434 550 (434440)

To Reach: RECKER RD (DIRT) ~ 7/8 MILE NORTH OF CHANDLER HEIGHTS RD. ~ 500' SOUTH OF WASH

Entry Permit Required: Y ____ N X

Monument Description: SET 1/2" REBAR IN PLASTIC PANEL

Signature 10-23-97 Date

PANEL DATA SHEET

Panel Number: 213

USGS Quad: Chandler Hght Year Monumented: _____

Described By: _____ Year Recovered: _____

State / County: Az/Maricopa

Stamped

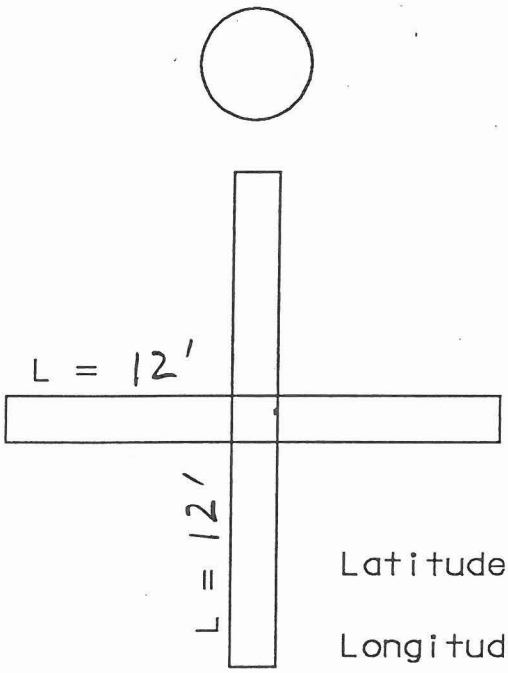

Location Sketch

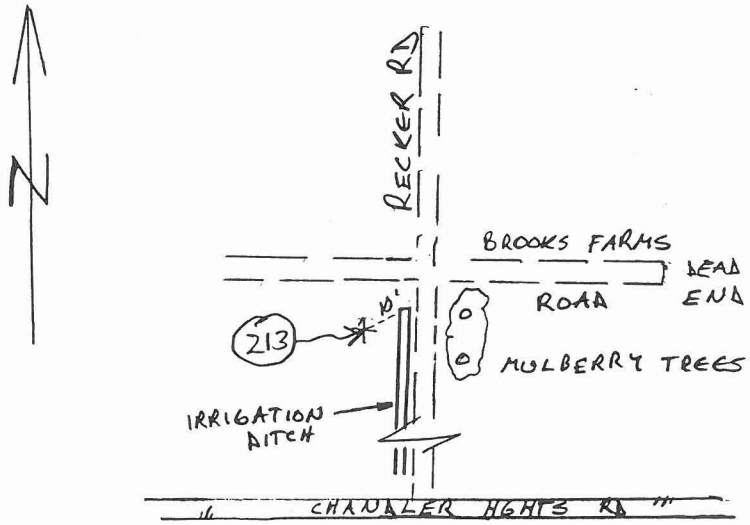

Latitude: 3678 055 (3678303)

Longitude: 434 550 (434500)

To Reach: 1/2 MILE NORTH OF CHANDLER HEIGHTS RD ON RECKER ROAD (DIRT) @ INTERSECTION WITH BROOKS FARMS ROAD (DIRT)

Entry Permit Required: Y ___ N X

Monument Description: SET 1/2" REBAR IN PLASTIC PANEL

Signature: [signature] Date: 10-23-97

PANEL DATA SHEET

Panel Number: 214

USGS Quad: Chandler Hght Year Monumented: _____

Described By: _____ Year Recovered: _____

State / County: Az/Maricopa

Stamped

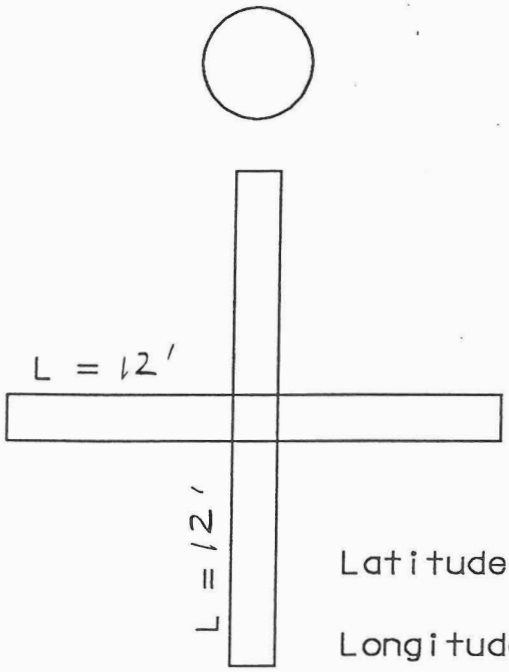

Location Sketch

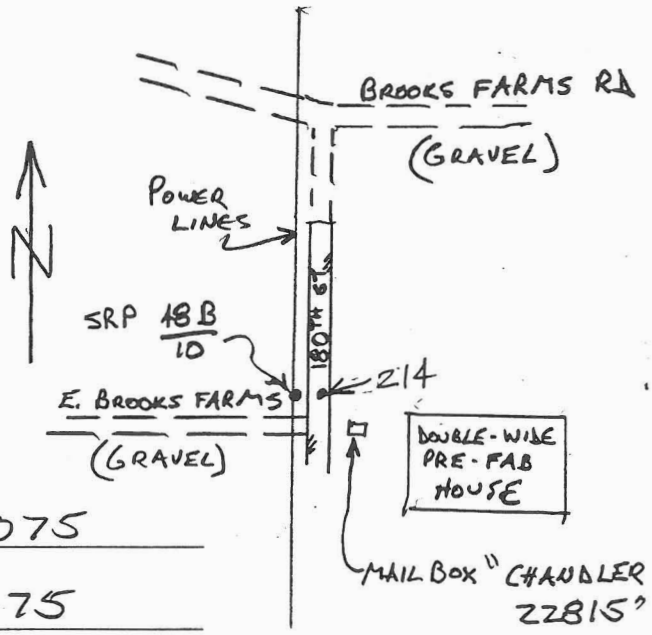

Latitude: 3678075

Longitude: 435375

To Reach: POWER RD S. TO BROOKS FARMS RD, WEST 1/2 MILE TO 180TH ST

Entry Permit Required: Y____ N____

Monument Description: SET PK IN AC ~60' S. OF END PAVEMENT 180TH ST

Gary Rush
Signature

10-20-97
Date

PANEL DATA SHEET

Panel Number: 215

USGS Quad: HIGLEY Year Monumented: _____

Described By: _____ Year Recovered: _____

State / County: AZ / Maricopa

Stamped

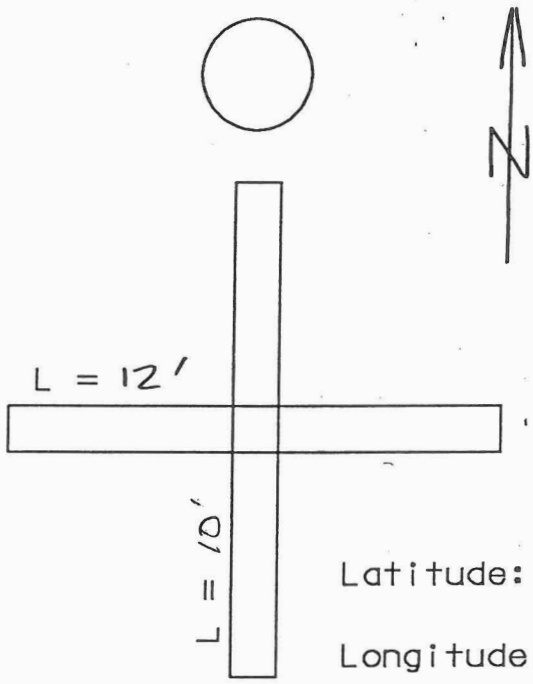

Location Sketch

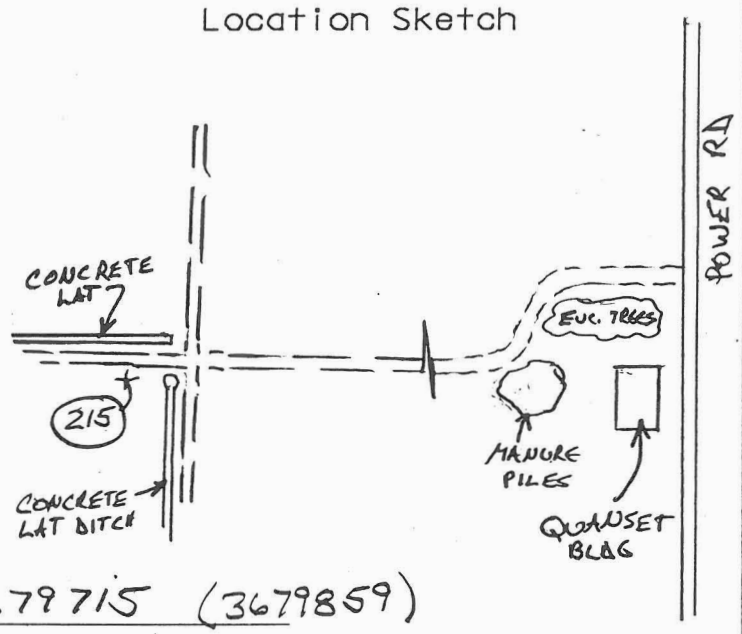

Latitude: 3679715 (3679859)

Longitude: 435380 (435282)

To Reach: FROM INTERSECTION OF QUEEN CREEK RD + POWER RD GO SOUTH ON POWER TO QUEEN CREEK BRIDGE THEN SOUTH 1/2 MILE TO DIRT ROAD RUNNING WEST, THEN WEST 1/2 MILE TO INTERSECTION OF DIRT ROADS. PANEL IS AT SOUTH EDGE ROAD ~ 30' WEST OF CONCRETE IRR. LATERAL

Entry Permit Required: Y ____ N X

Monument Description: SET 1/2" REBAR IN PLASTIC PANEL

Gary Reach
Signature

10-23-97
Date

AVERY

STATION / PANEL VISIBILITY DIAGRAM

Station Name: _____

Panel Number: 100

USGS Quad: HIGLEY Latitude: 3679760

Described By: _____ Longitude: 436175

Date: 10-20-97

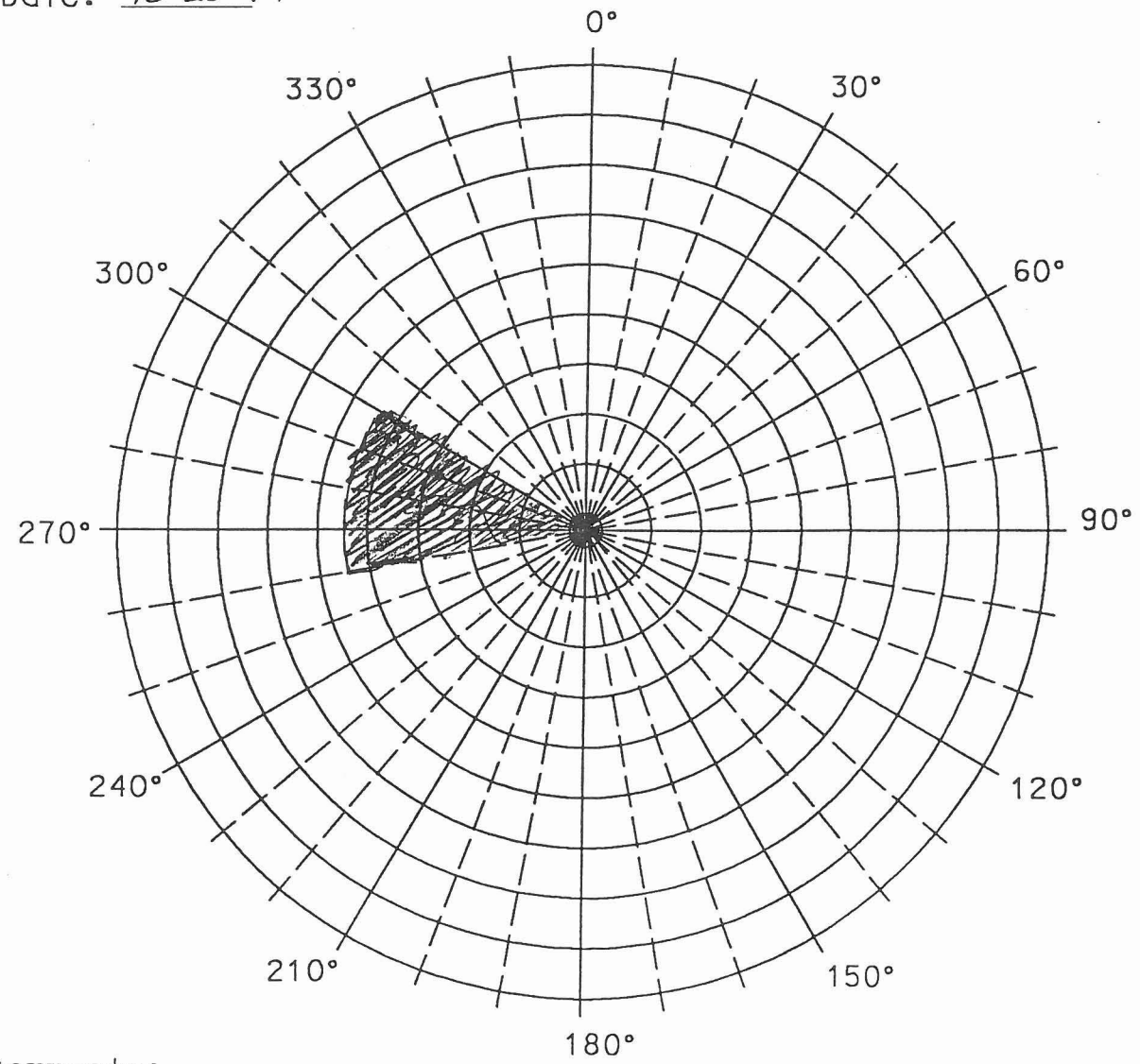

Comments:

TREE

STATION / PANEL VISIBILITY DIAGRAM

Station Name: _____

Panel Number: 101

USGS Quad: HIGLEY Latitude: 3679425

Described By: _____ Longitude: 435810

Date: _____

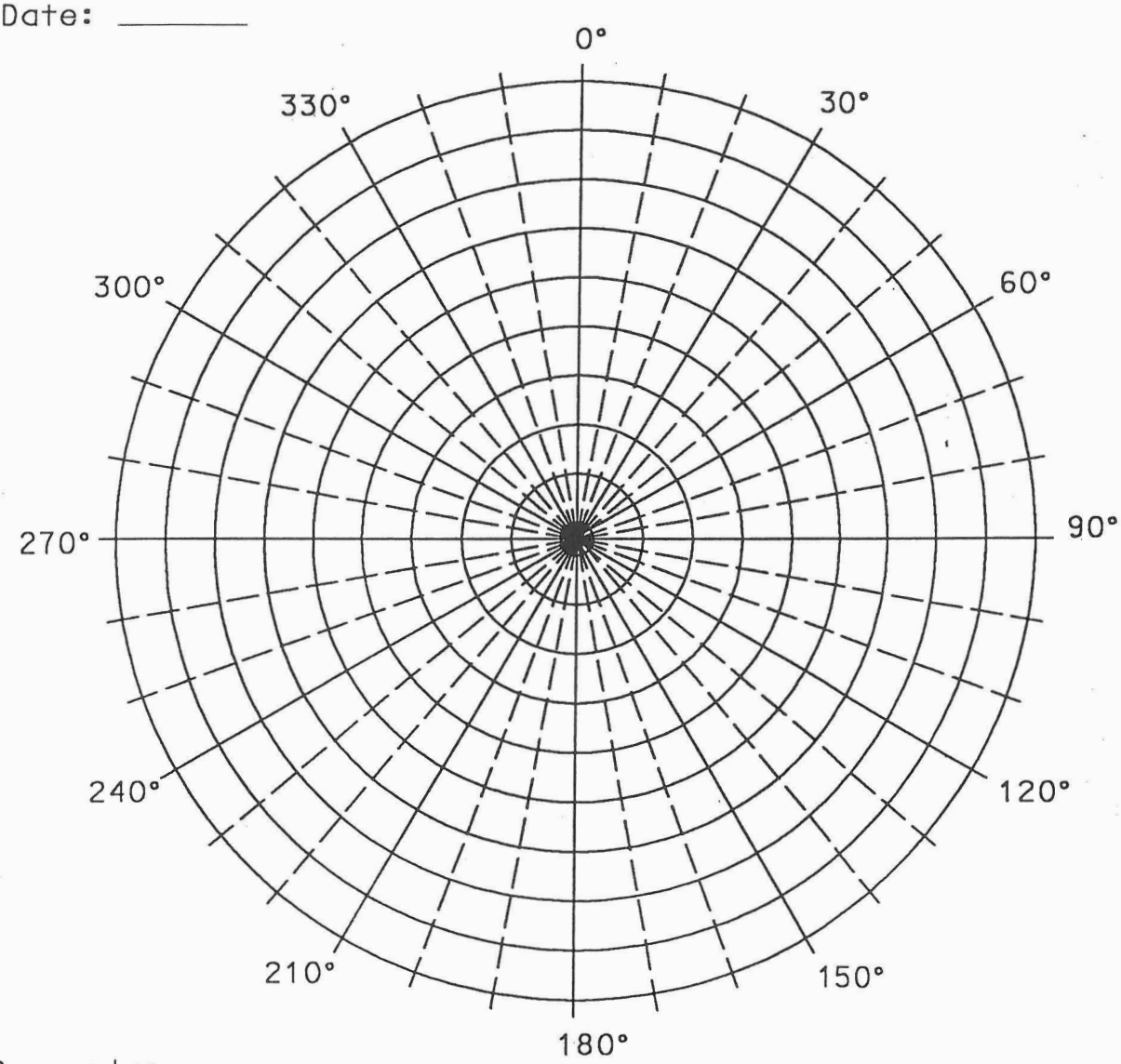

Comments:

_____

_____

_____

STATION / PANEL VISIBILITY DIAGRAM

Station Name: _____

Panel Number: 102

USGS Quad: Chandler Hght Latitude: 3678900

Described By: _____ Longitude: 435360

Date: 10-22-97

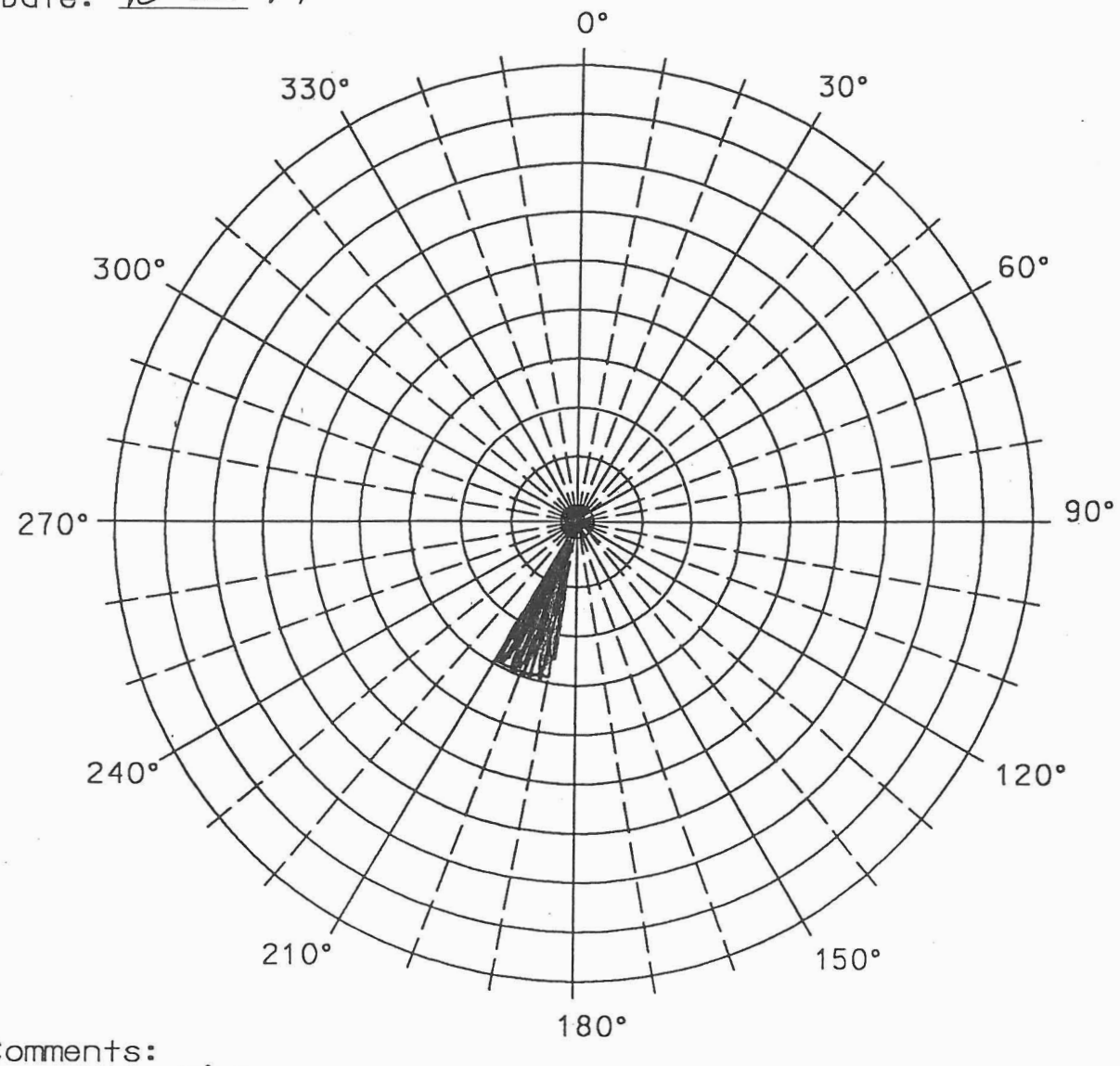

Comments: TREE

STATION / PANEL VISIBILITY DIAGRAM

Station Name: _____

Panel Number: 103

USGS Quad: Chandler Hight Latitude: 3678565

Described By: _____ Longitude: 435360

Date: 10-23-97

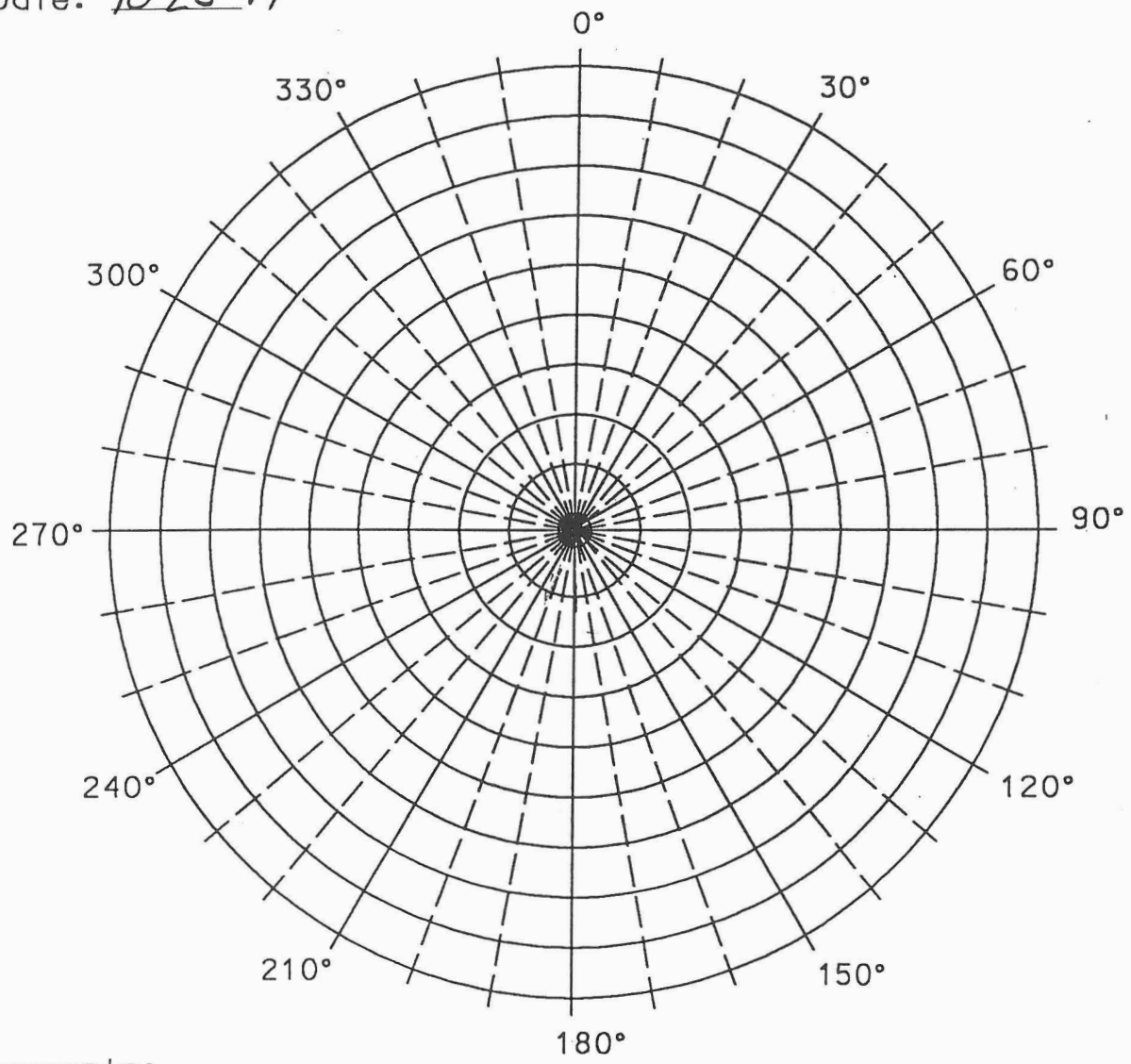

Comments:
NO OBSTRUCTIONS

STATION / PANEL VISIBILITY DIAGRAM

Station Name: _____

Panel Number: 104

USGS Quad: Chandler Hght Latitude: 3678925

Described By: _____ Longitude: 435800

Date: 10-22-97

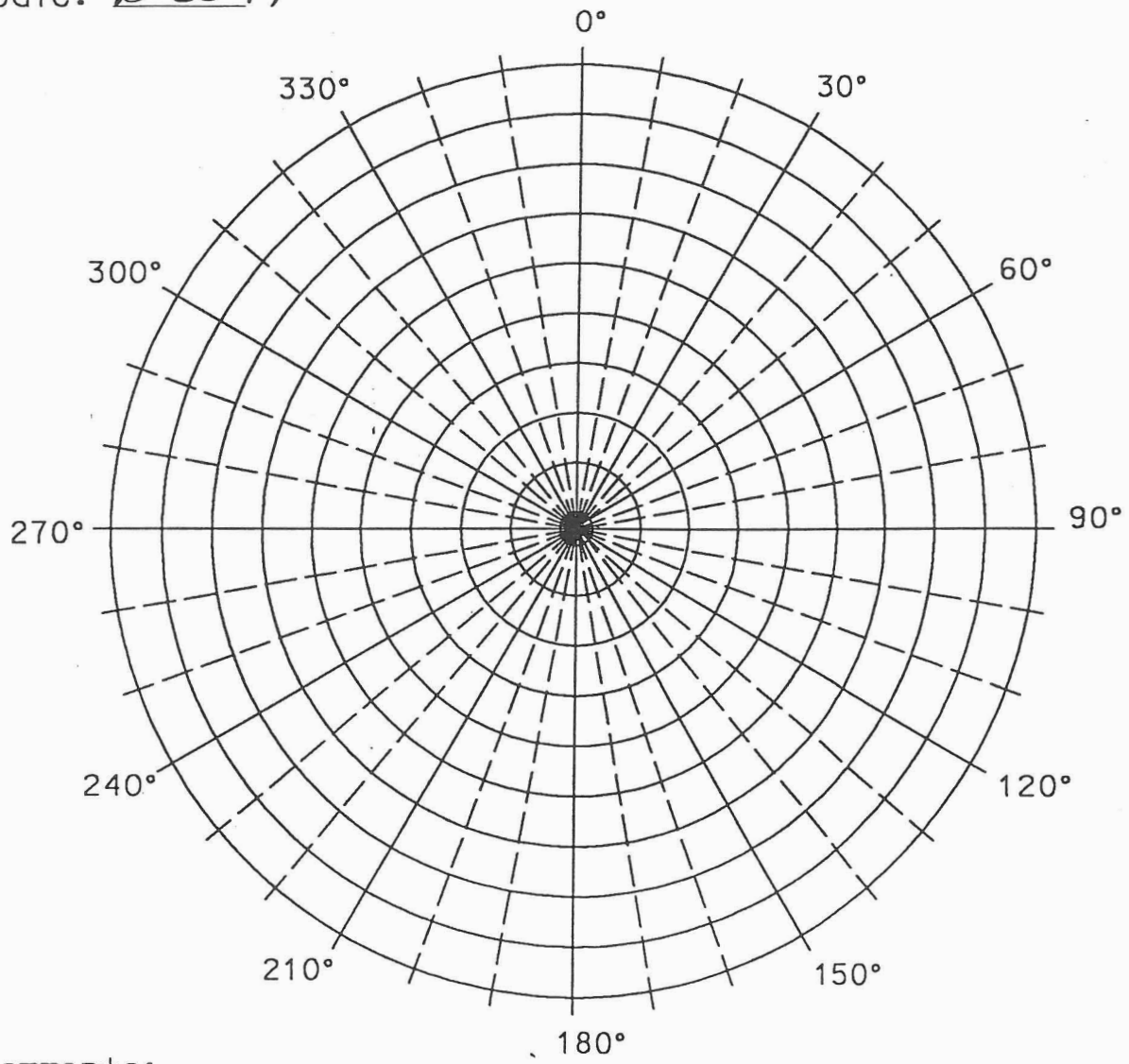

Comments:

NO OBSTRUCTIONS

STATION / PANEL VISIBILITY DIAGRAM

Station Name: _____

Panel Number: 105

USGS Quad: HIGLEY Latitude: 3679135

Described By: _____ Longitude: 436175

Date: 10-20-97

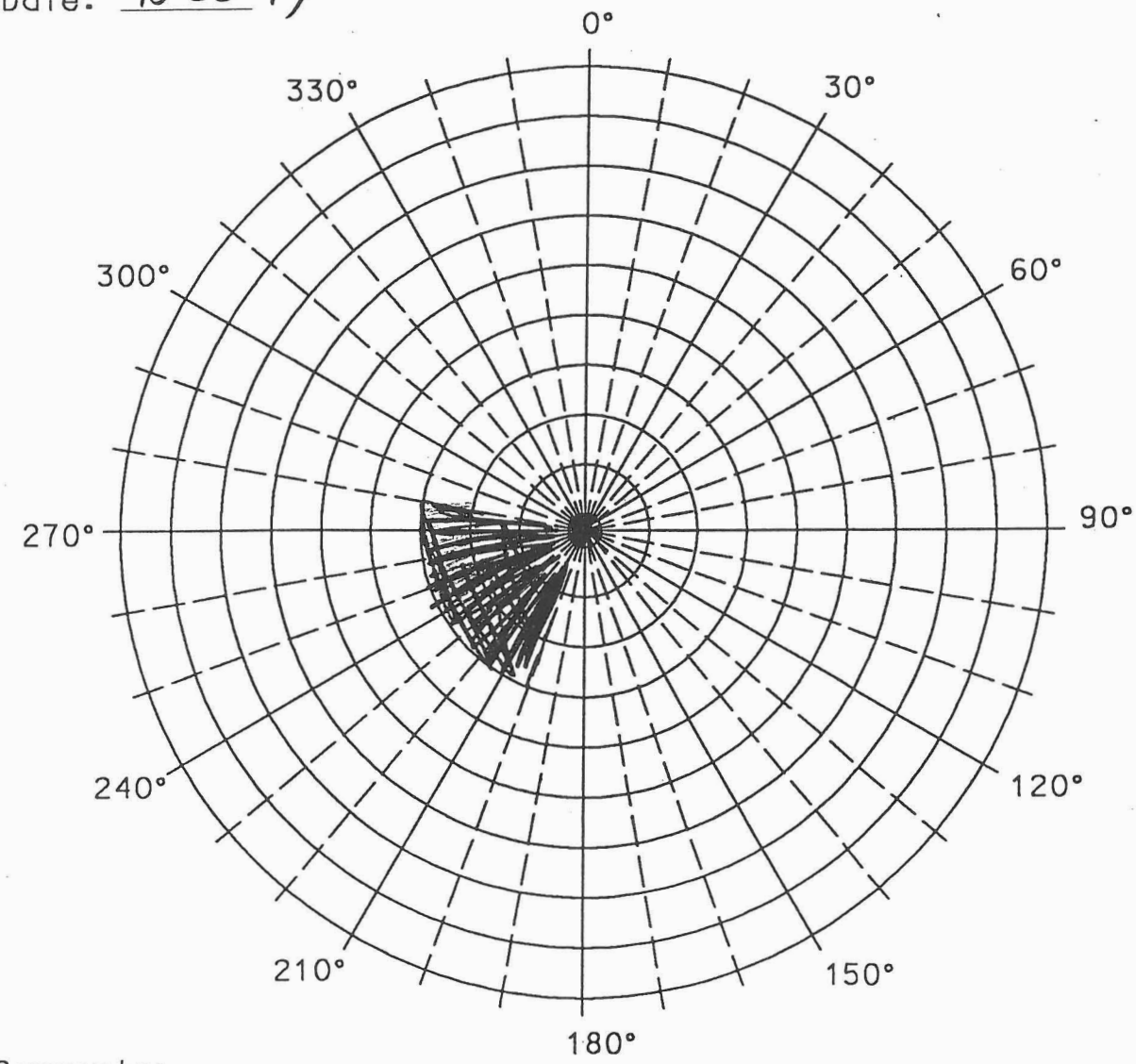

Comments:

TREES

STATION / PANEL VISIBILITY DIAGRAM

Station Name: _____

Panel Number: 106

USGS Quad: Chandler Hght Latitude: 3678600

Described By: _____ Longitude: 436175

Date: 10-20-97

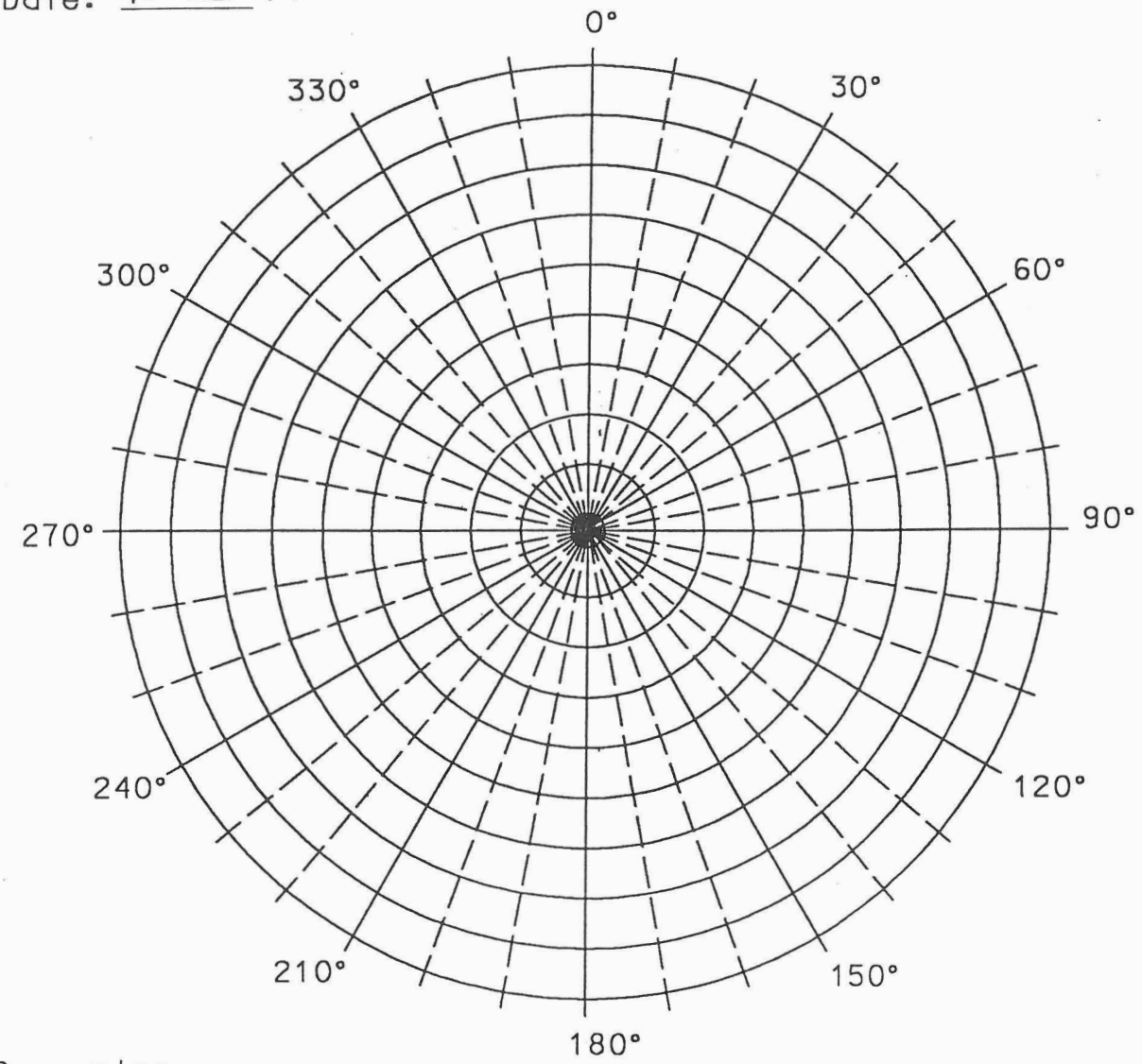

Comments:

NO OBSTRUCTIONS

STATION / PANEL VISIBILITY DIAGRAM

Station Name: _____

Panel Number: 107

USGS Quad: Chandler Hghts Latitude: 3678125

Described By: _____ Longitude: 436175

Date: 10-20-97

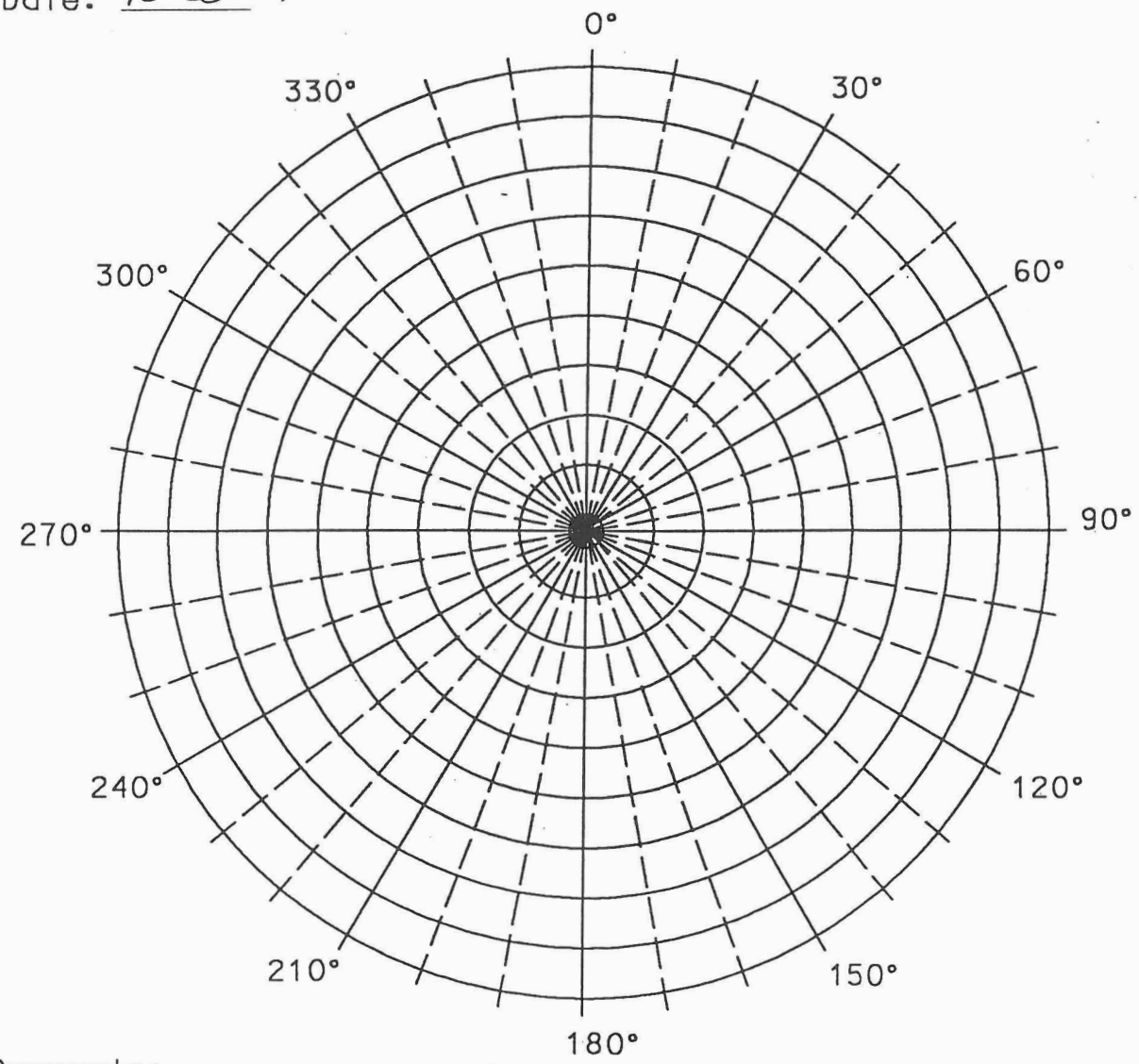

Comments:

NO OBSTRUCTIONS

STATION / PANEL VISIBILITY DIAGRAM

Station Name: _____

Panel Number: 108

USGS Quad: Chandler Hgt Latitude: 3678400

Described By: _____ Longitude: 436650

Date: 10-22-97

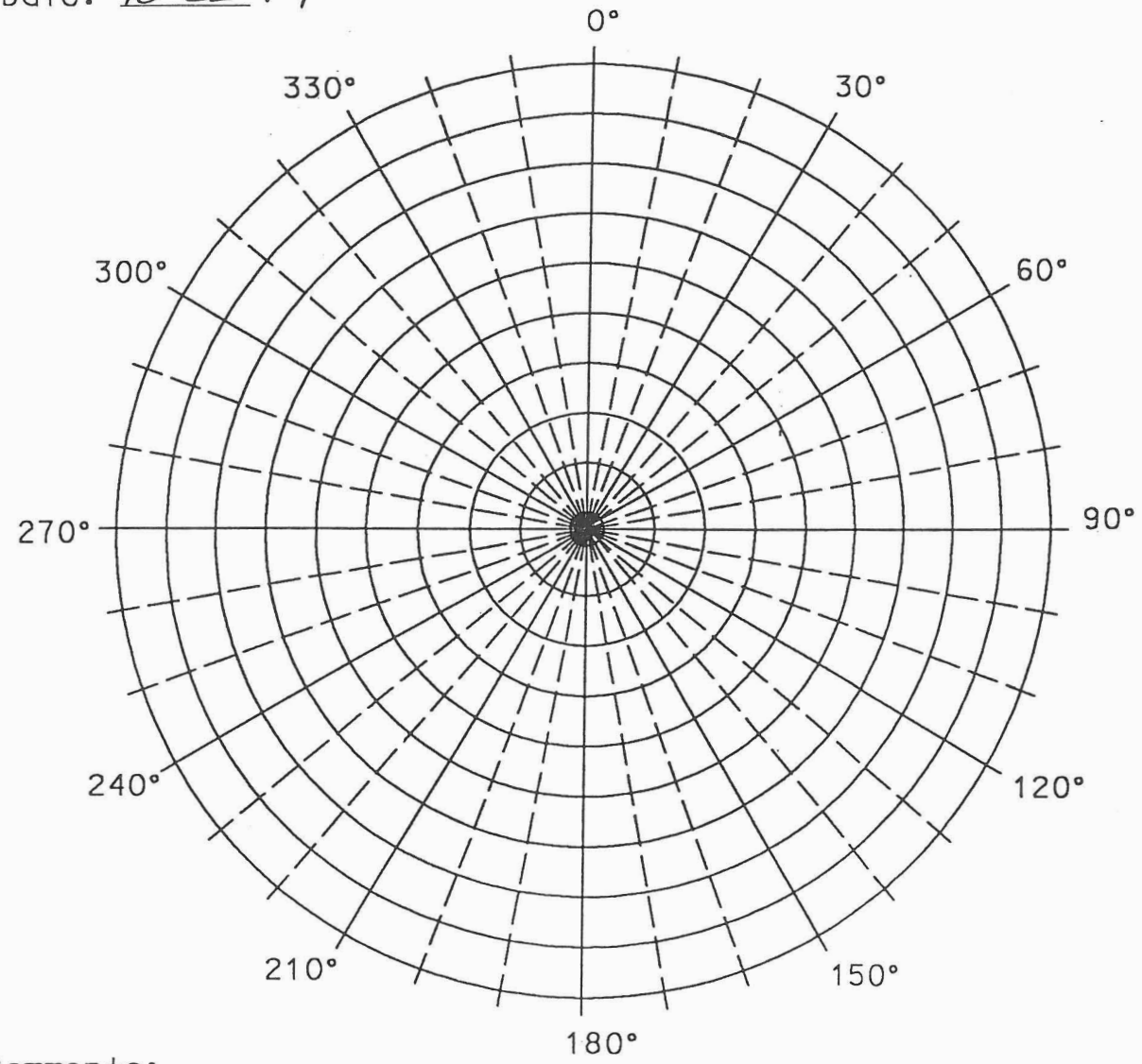

Comments:

NO OBSTRUCTIONS

STATION / PANEL VISIBILITY DIAGRAM

Station Name: _____

Panel Number: 109

USGS Quad: Chandler Hight Latitude: 3678875

Described By: _____ Longitude: 436955

Date: 10-20-97

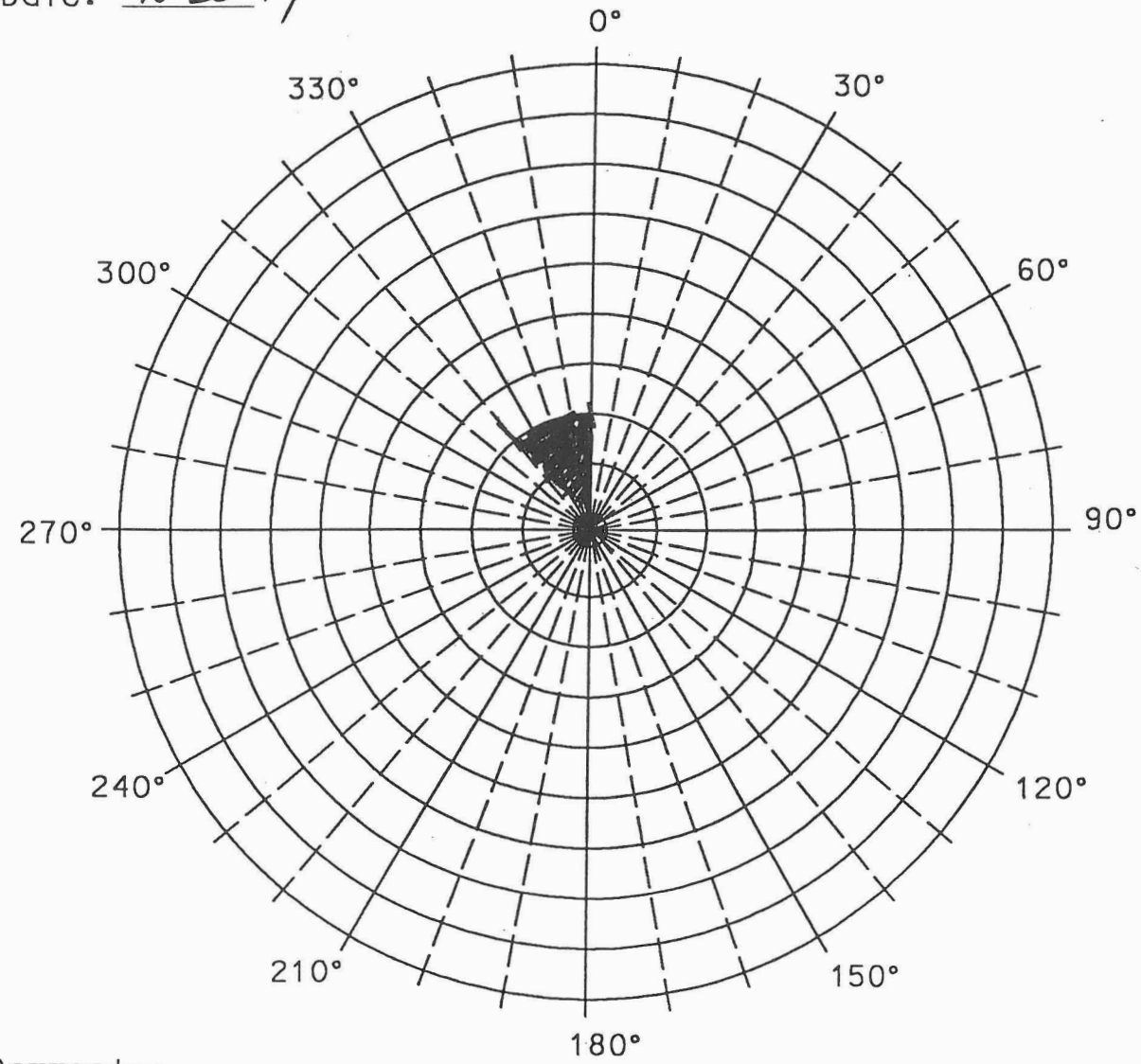

Comments:

TREES

STATION / PANEL VISIBILITY DIAGRAM

Station Name: _____

Panel Number: 110

USGS Quad: Chandler Hight Latitude: 3678425

Described By: _____ Longitude: 437745

Date: 10-20-97

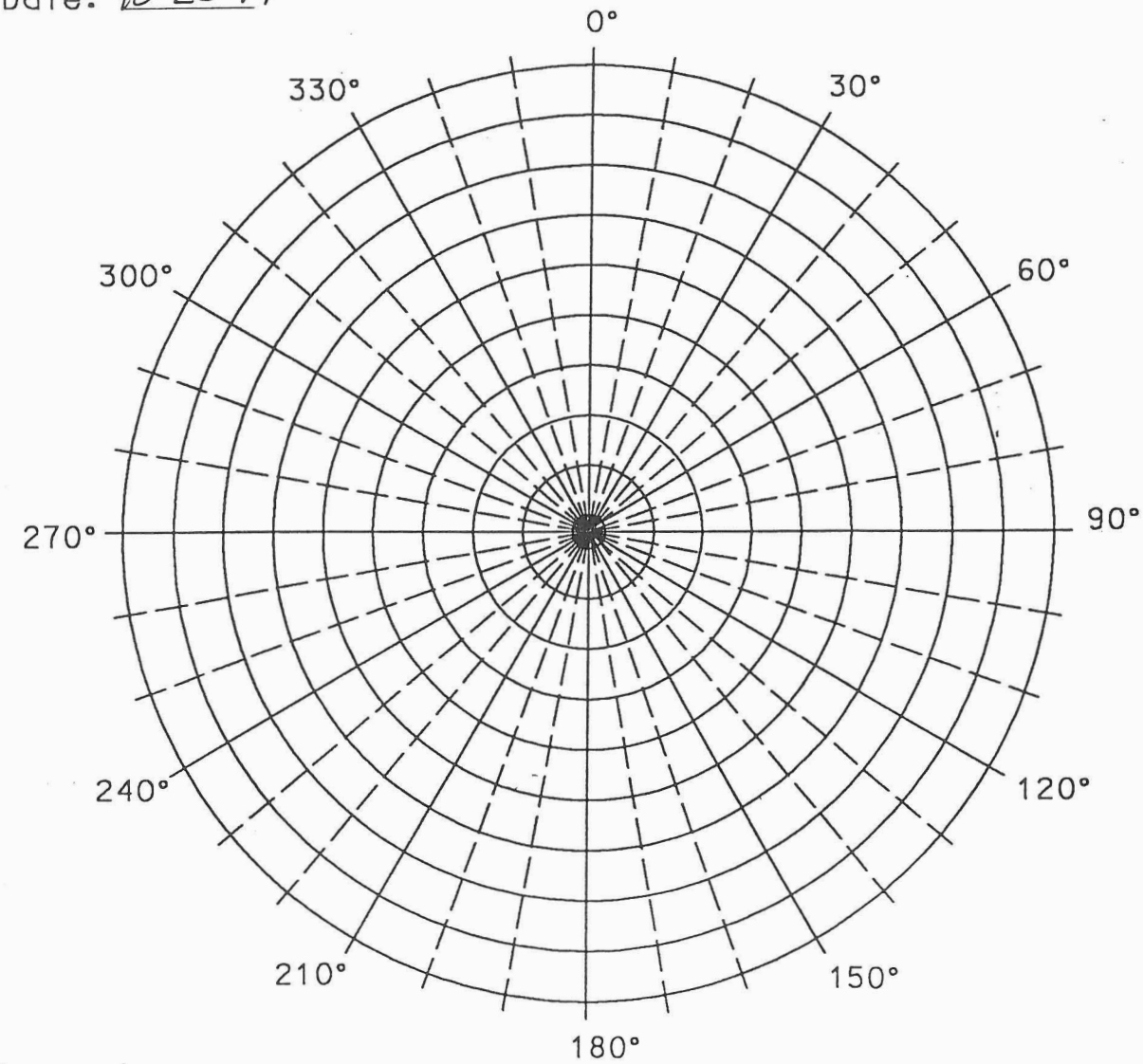

Comments:

NO OBSTRUCTIONS

STATION / PANEL VISIBILITY DIAGRAM

Station Name: _____

Panel Number: 111

USGS Quad: Chandler Hghts. Latitude: 3678035

Described By: _____ Longitude: 437345

Date: 10-20-97

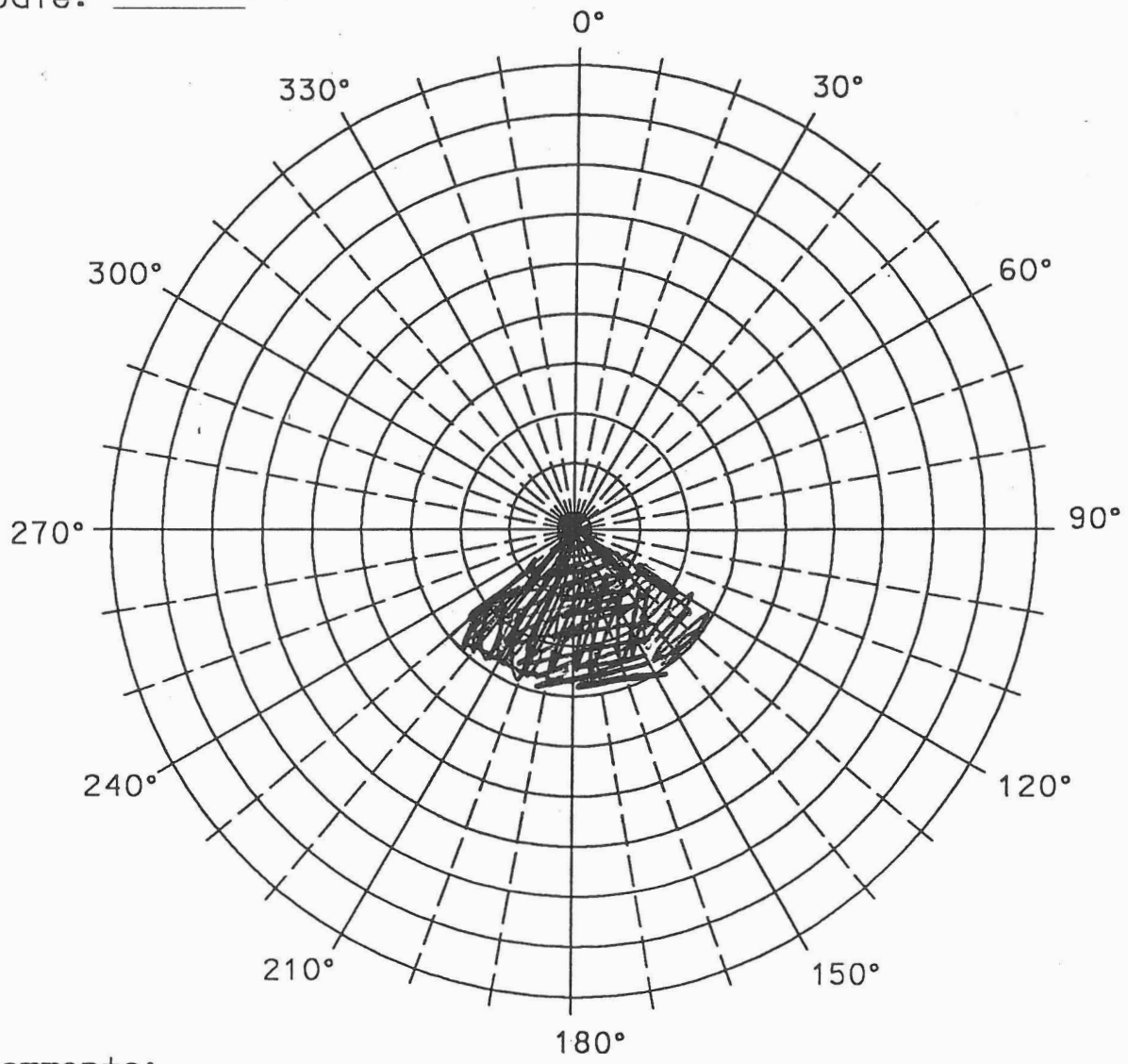

Comments:

TREES

STATION / PANEL VISIBILITY DIAGRAM

Station Name: _____

Panel Number: 112

USGS Quad: Chandler Hight Latitude: 3677810

Described By: _____ Longitude: 437120

Date: 10-20-97

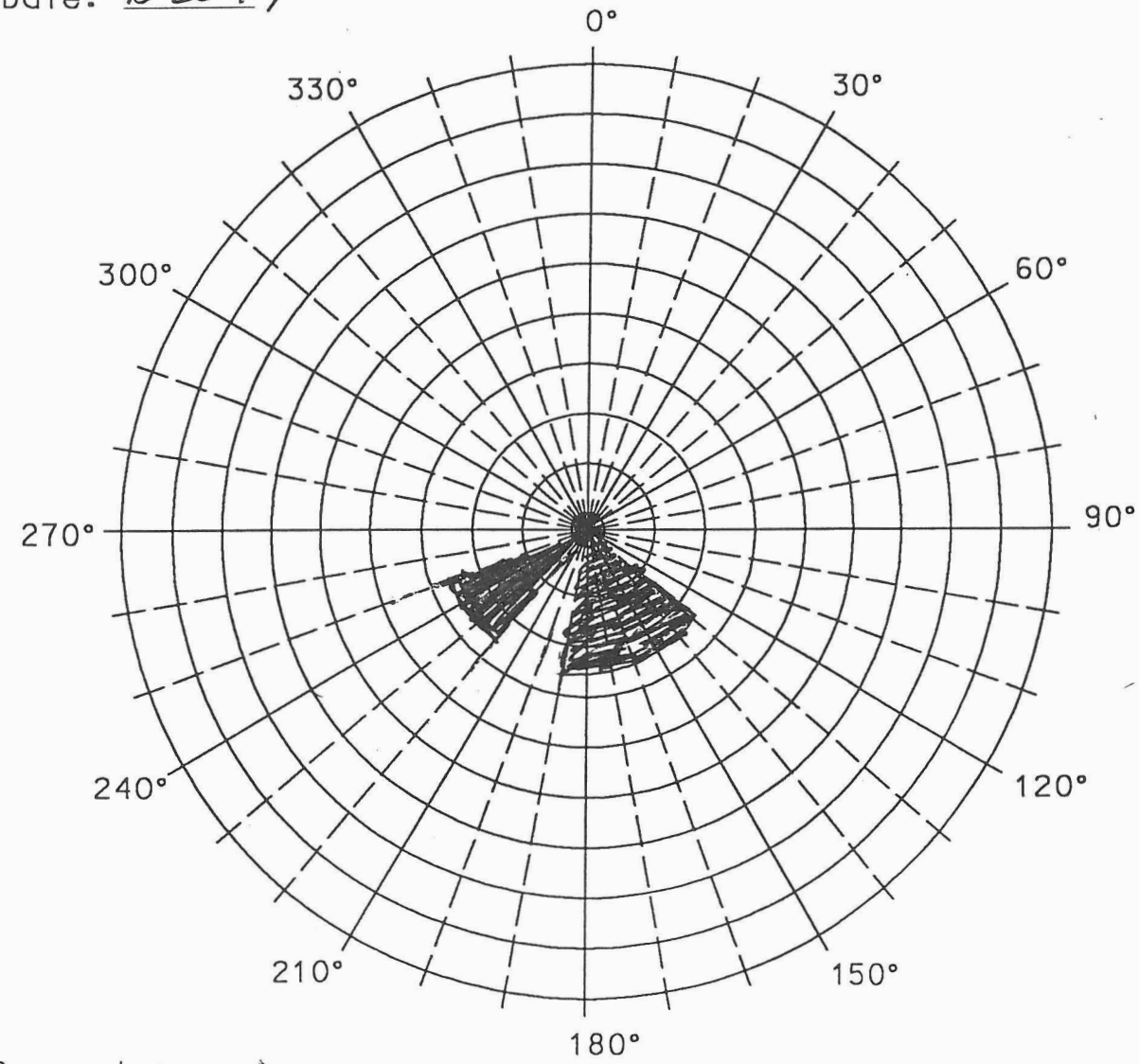

Comments:
TREES

STATION / PANEL VISIBILITY DIAGRAM

Station Name: _____

Panel Number: 113

USGS Quad: Chandler Hght. Latitude: 3677680

Described By: _____ Longitude: 436260

Date: 10-21-97

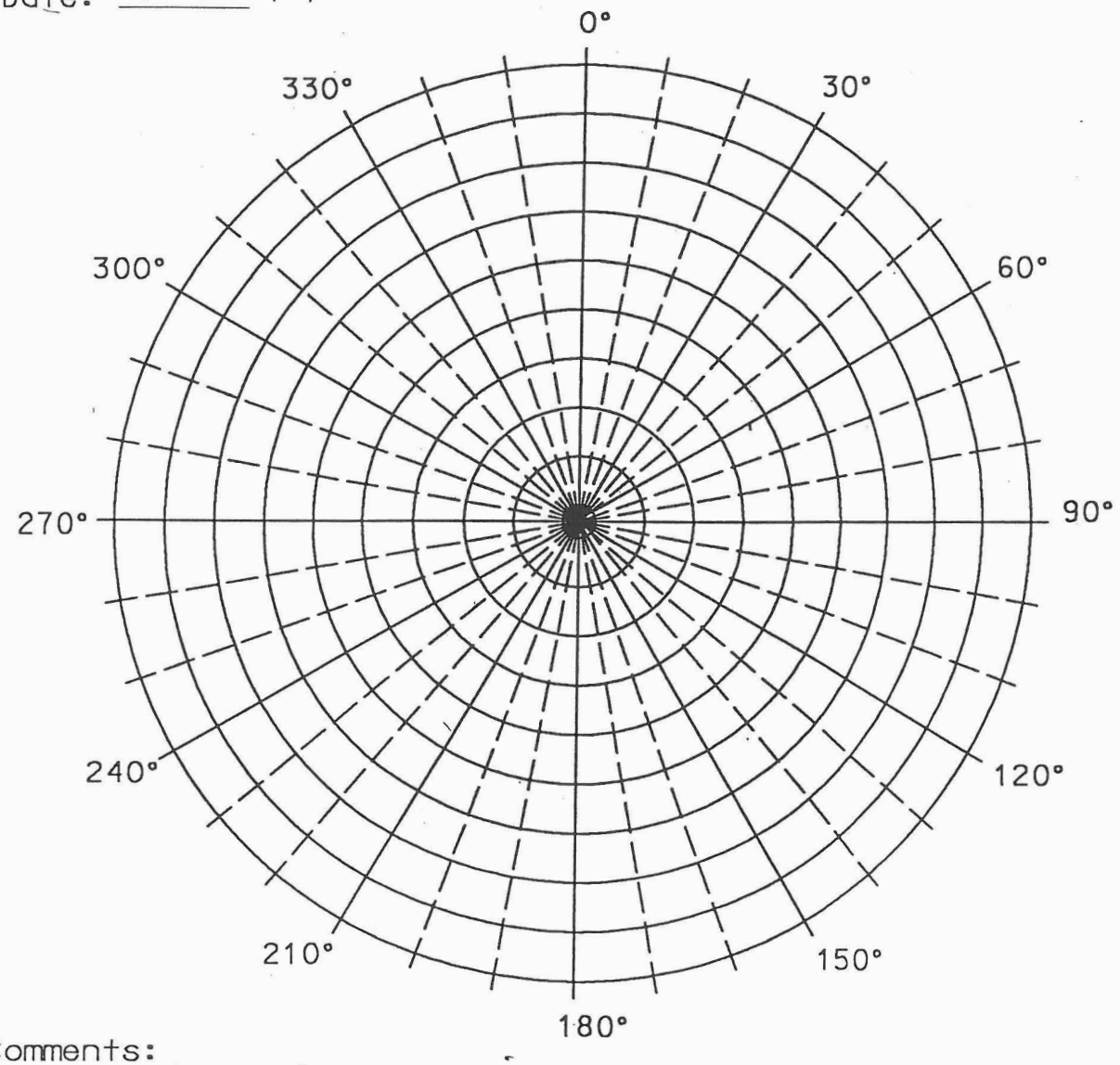

Comments:
NO OBSTRUCTIONS

STATION / PANEL VISIBILITY DIAGRAM

Station Name: _____

Panel Number: 114

USGS Quad: Chandler Hght Latitude: 3677225

Described By: _____ Longitude: 437715

Date: 10-20-97

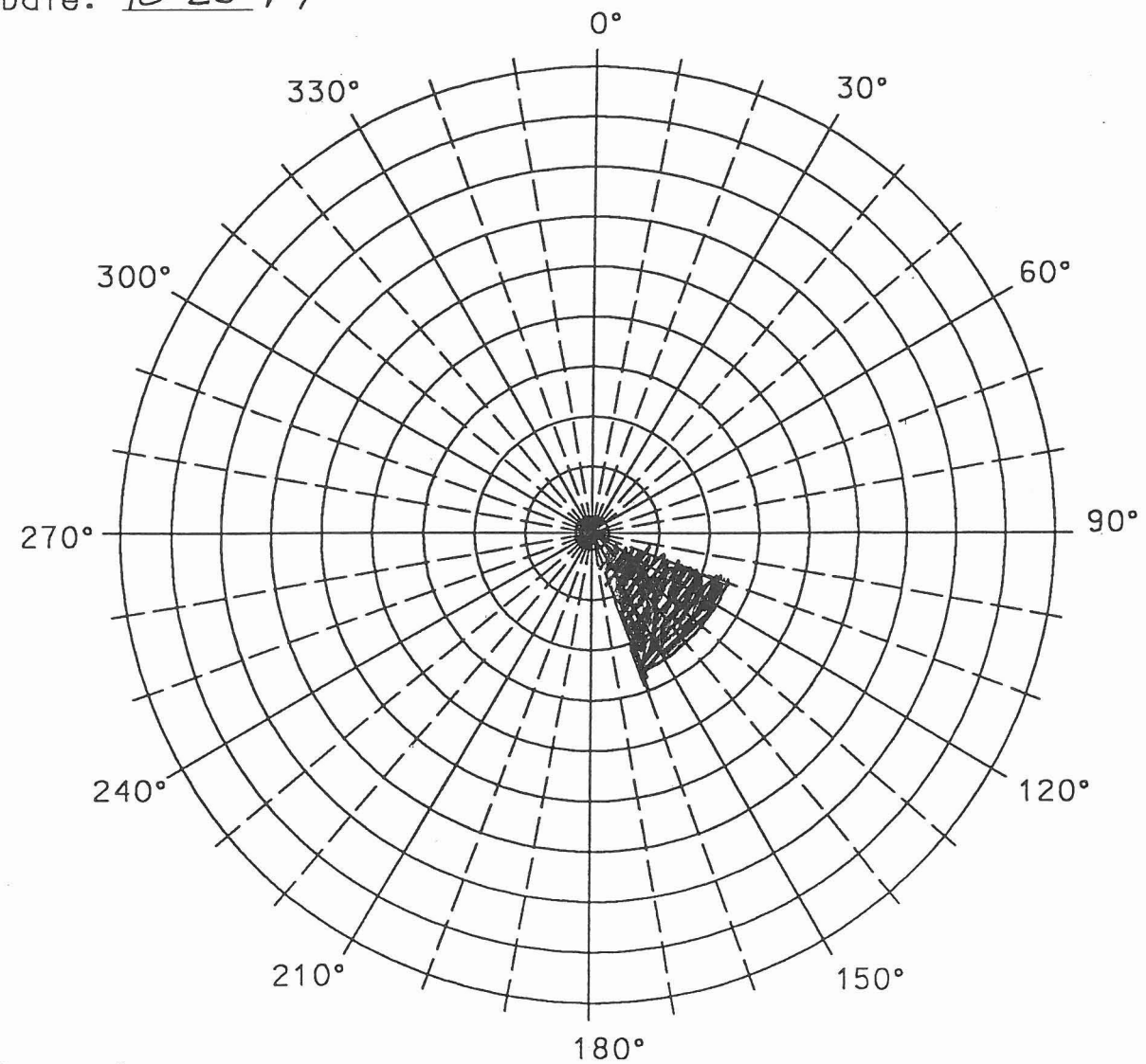

Comments:

TREES

STATION / PANEL VISIBILITY DIAGRAM

Station Name: _____

Panel Number: 115

USGS Quad: CHANDLER HGHTS Latitude: 3677710

Described By: _____ Longitude: 438596

Date: 10-21-97

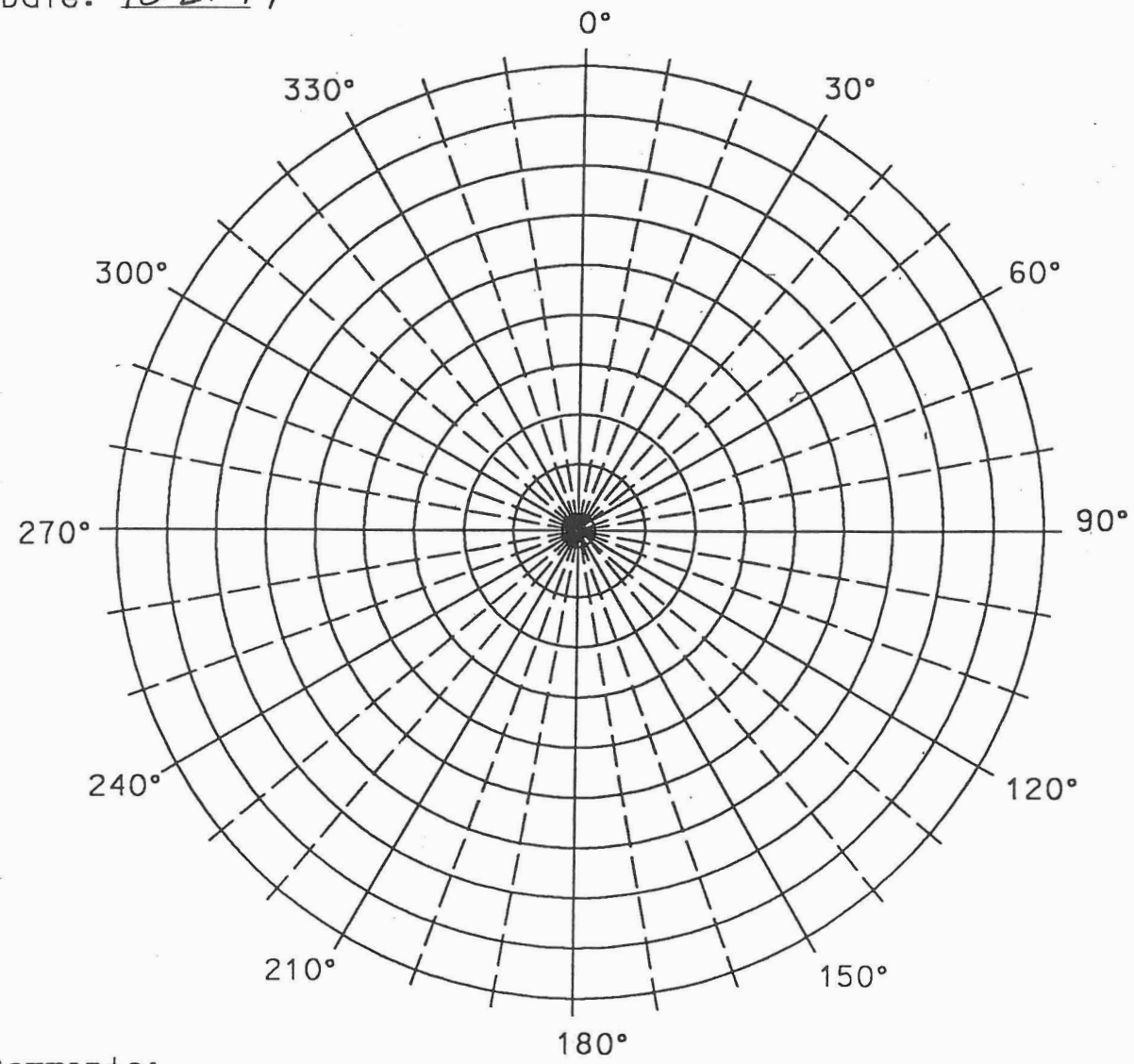

Comments:

NO OBSTRUCTIONS

STATION / PANEL VISIBILITY DIAGRAM

Station Name: _____

Panel Number: 116

USGS Quad: CHANDLER HTS. Latitude: 3677001

Described By: _____ Longitude: 438150

Date: 10-20-97

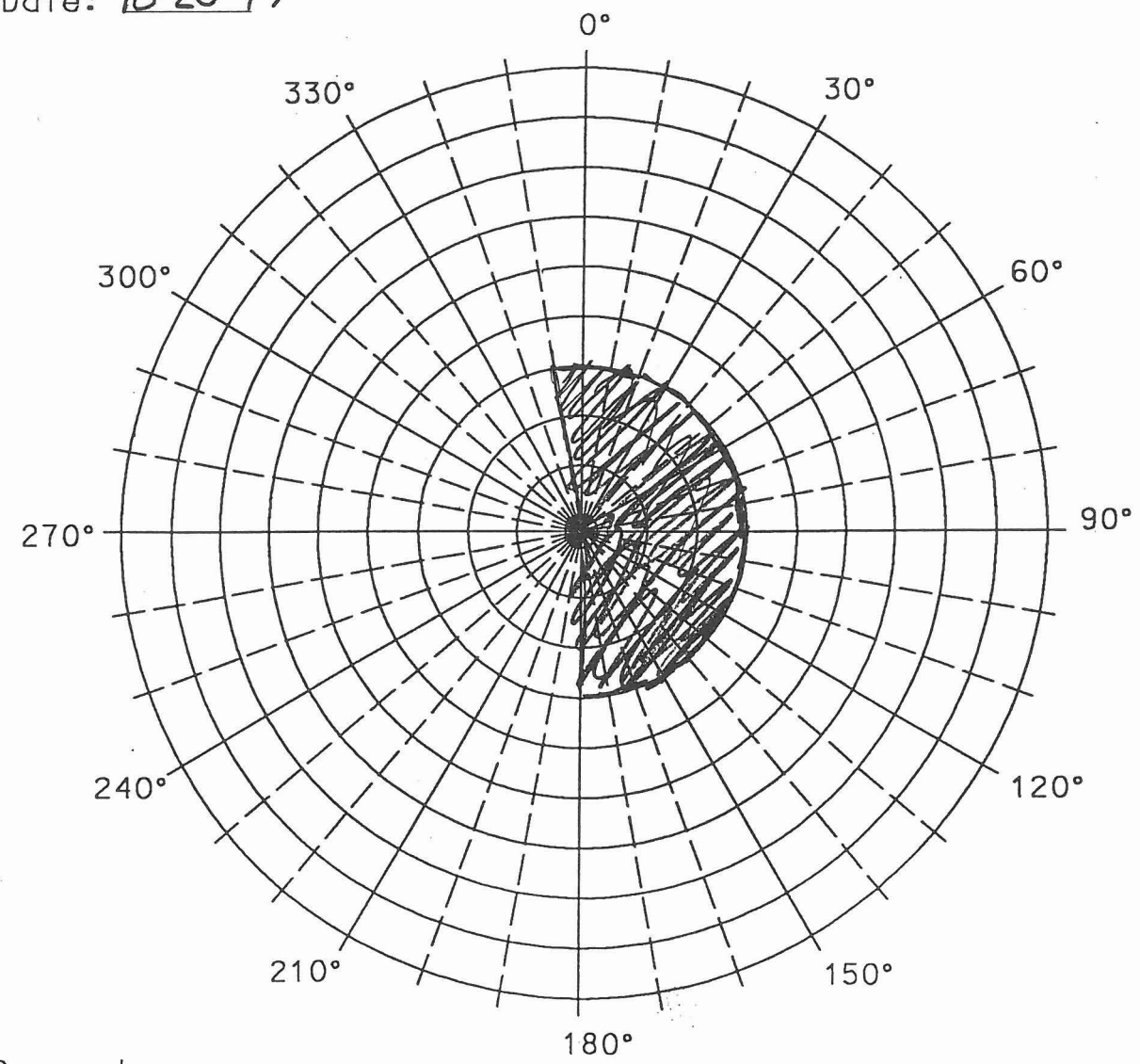

Comments:

HOUSES + TREES

STATION / PANEL VISIBILITY DIAGRAM

Station Name: _____

Panel Number: 117

USGS Quad: CHANDLER HTS. Latitude: 3676425

Described By: _____ Longitude: 437730

Date: 10-20-97

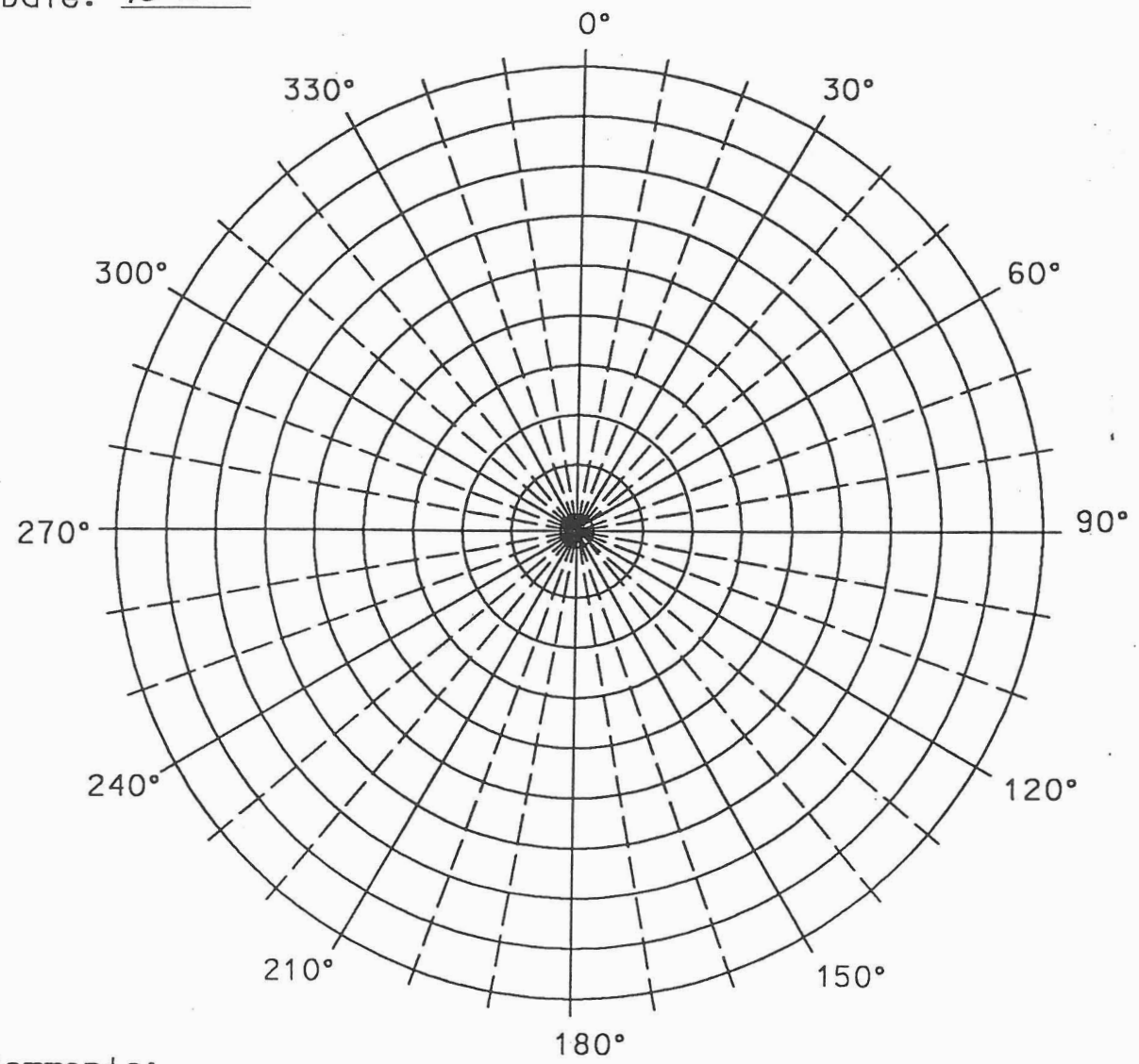

Comments:

NO OBSTRUCTIONS

STATION / PANEL VISIBILITY DIAGRAM

Station Name: _____

Panel Number: 118

USGS Quad: CHANDLER HTS Latitude: 3675830

Described By: _____ Longitude: 438100

Date: 10-23-97

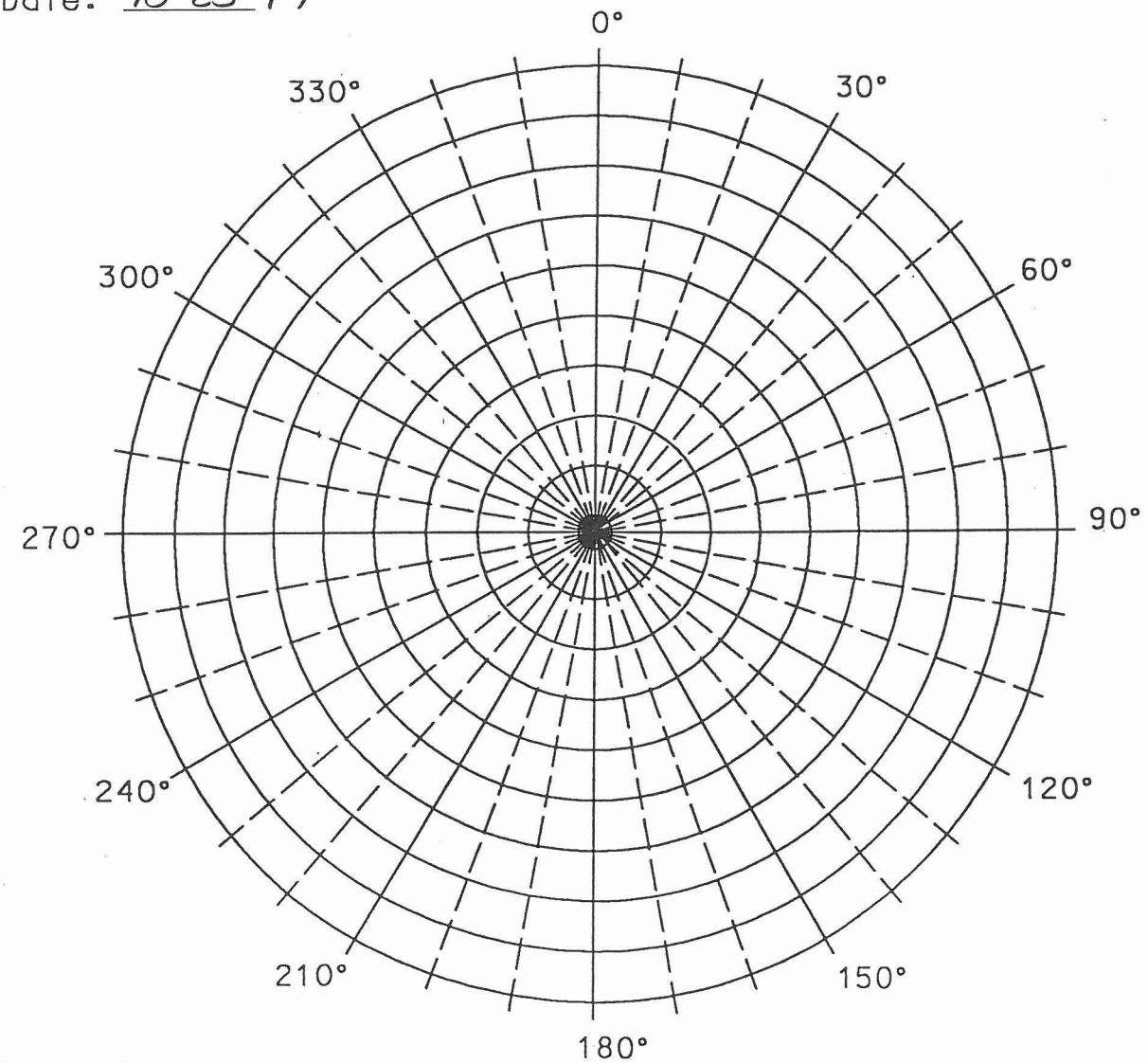

Comments:

NO OBSTRUCTIONS

STATION / PANEL VISIBILITY DIAGRAM

Station Name: _____

Panel Number: 119

USGS Quad: CHANDLER HTS. Latitude: 3676 275

Described By: _____ Longitude: 437735

Date: 10-23-97

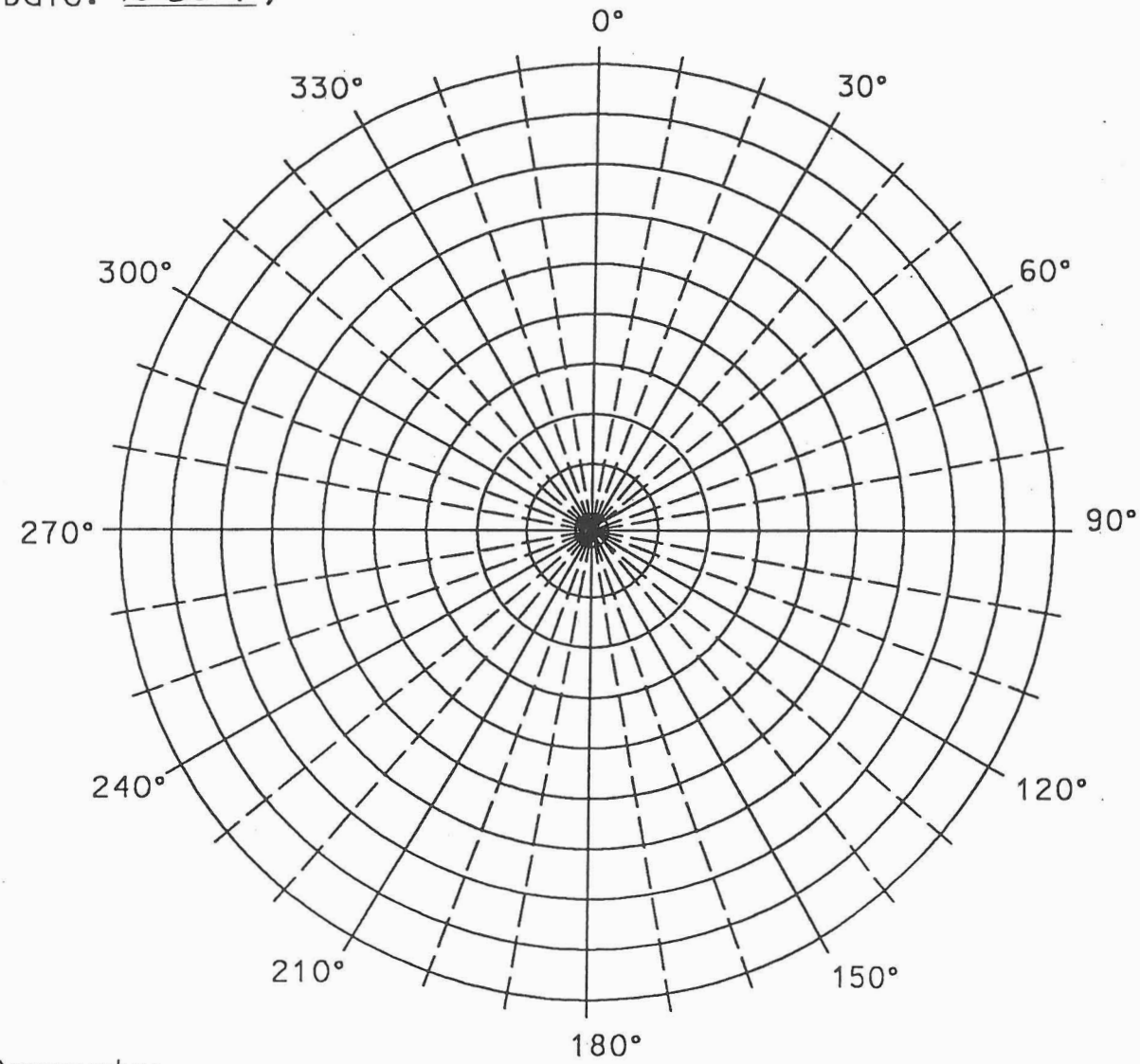

Comments:

NO OBSTRUCTIONS

STATION / PANEL VISIBILITY DIAGRAM

Station Name: _____

Panel Number: 120

USGS Quad: CHANDLER HTS Latitude: 3676725

Described By: _____ Longitude: 437850

Date: _____

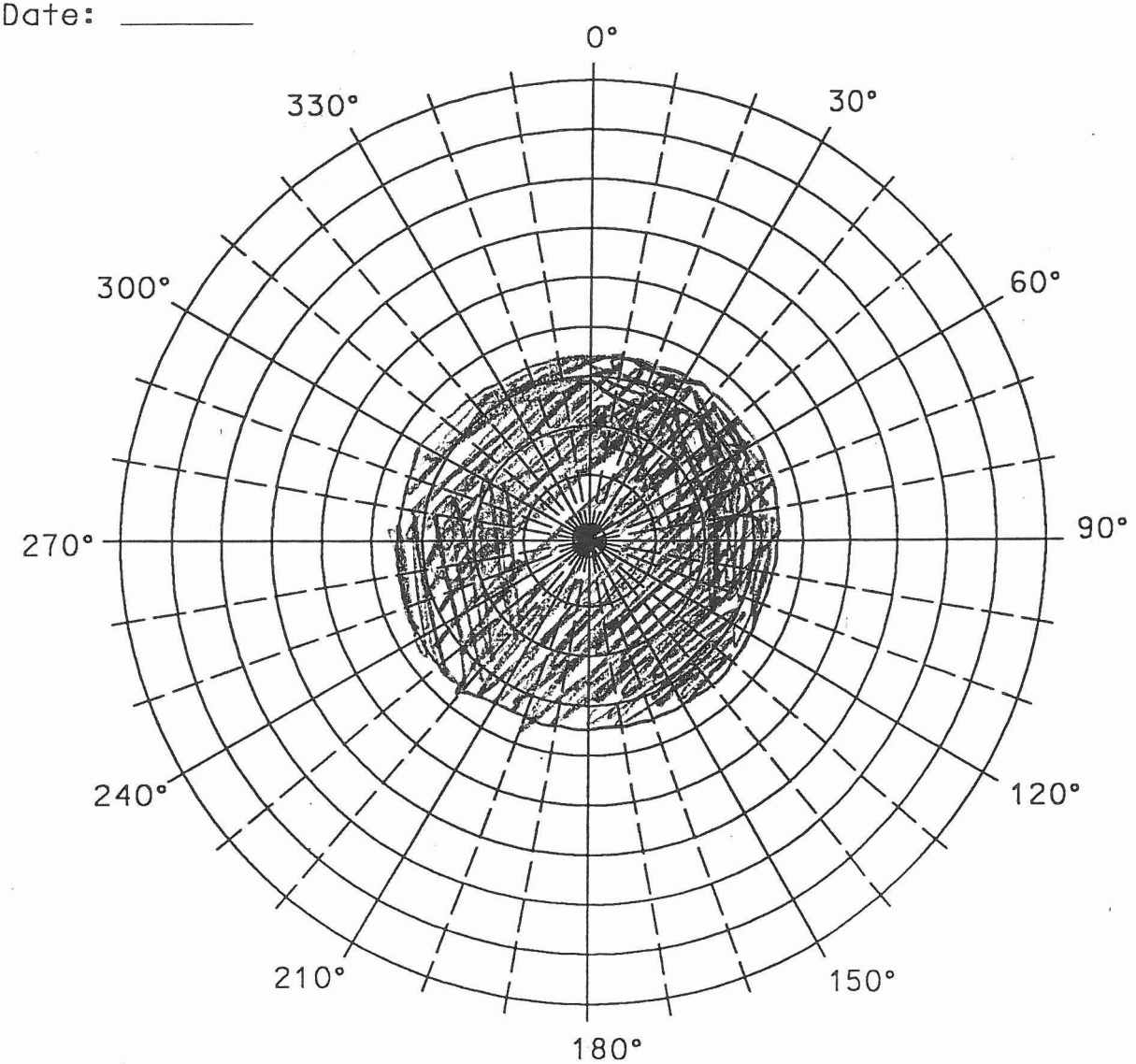

Comments: TREES + TRAILERS

STATION / PANEL VISIBILITY DIAGRAM

Station Name: _____

Panel Number: 121

USGS Quad: CHANDLER HTS Latitude: 3676970

Described By: _____ Longitude: 439300

Date: 10-21-97

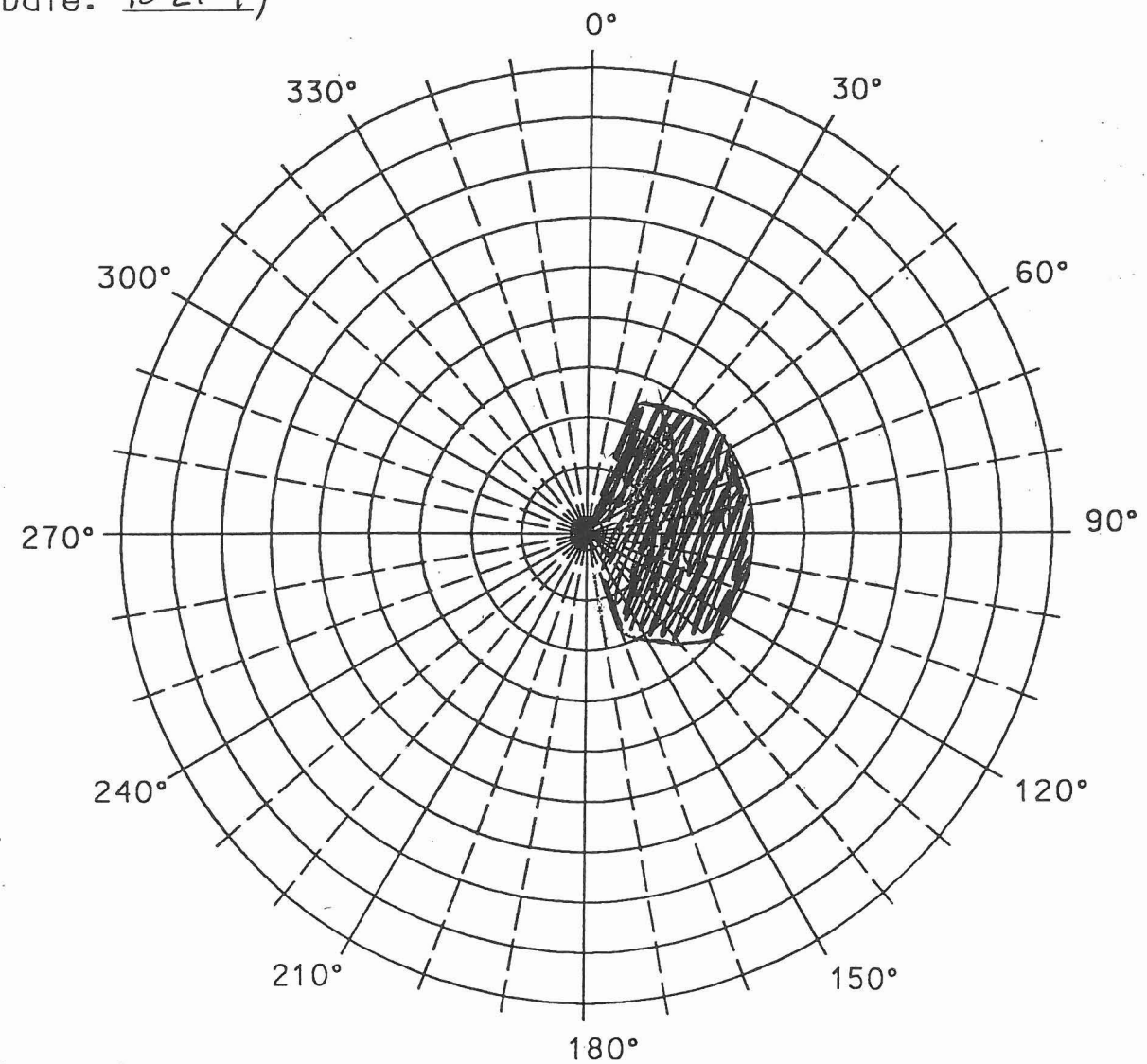

Comments: PECAN GROVE

STATION / PANEL VISIBILITY DIAGRAM

Station Name: _____

Panel Number: 122

USGS Quad: CHANDLER HTS Latitude: 3676240

Described By: _____ Longitude: 440025

Date: 10-21-97

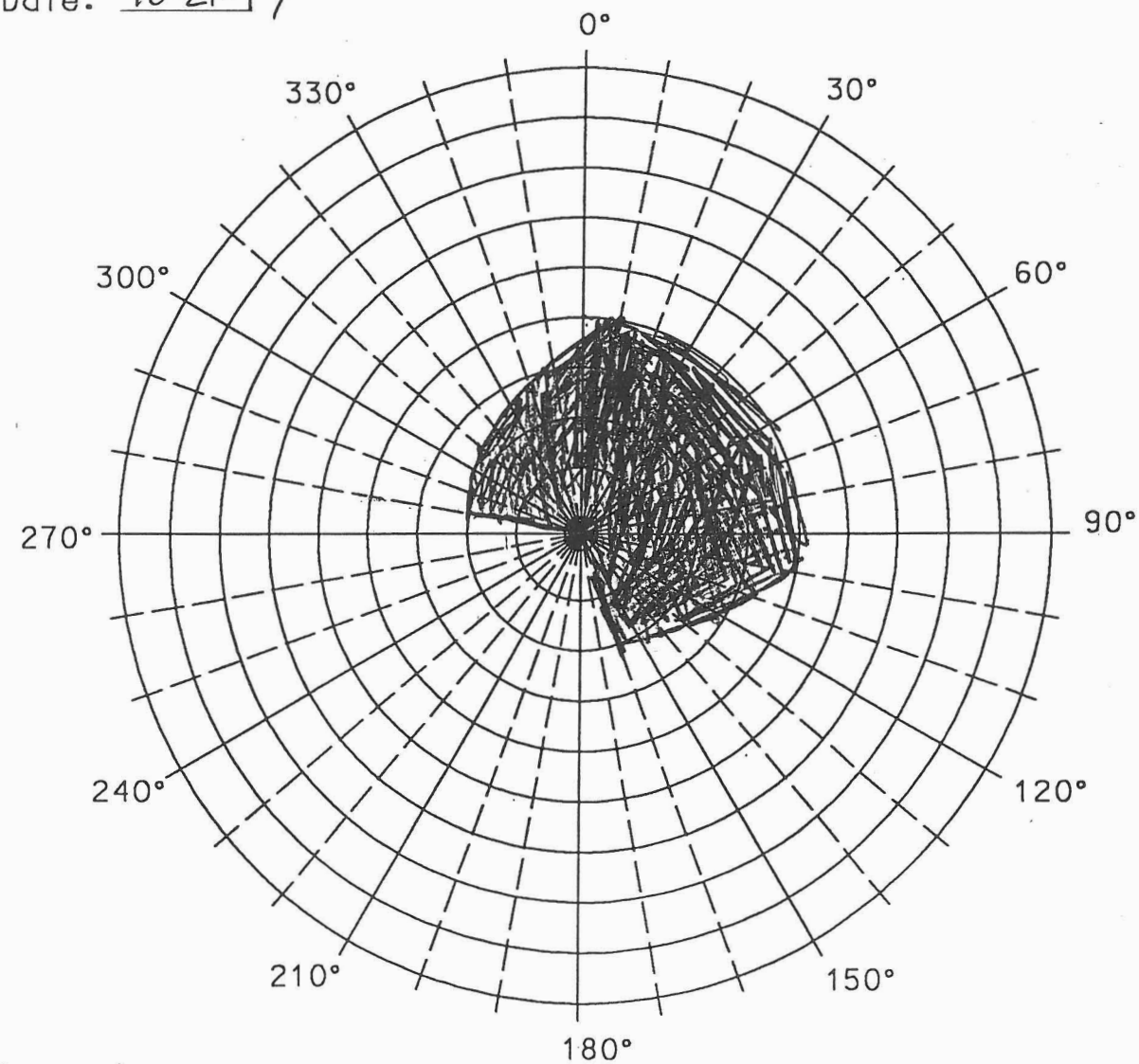

Comments:

TREES

STATION / PANEL VISIBILITY DIAGRAM

Station Name: _____

Panel Number: 123

USGS Quad: CHANDLER HTS Latitude: 3675730

Described By: _____ Longitude: 439400

Date: 10-21-97

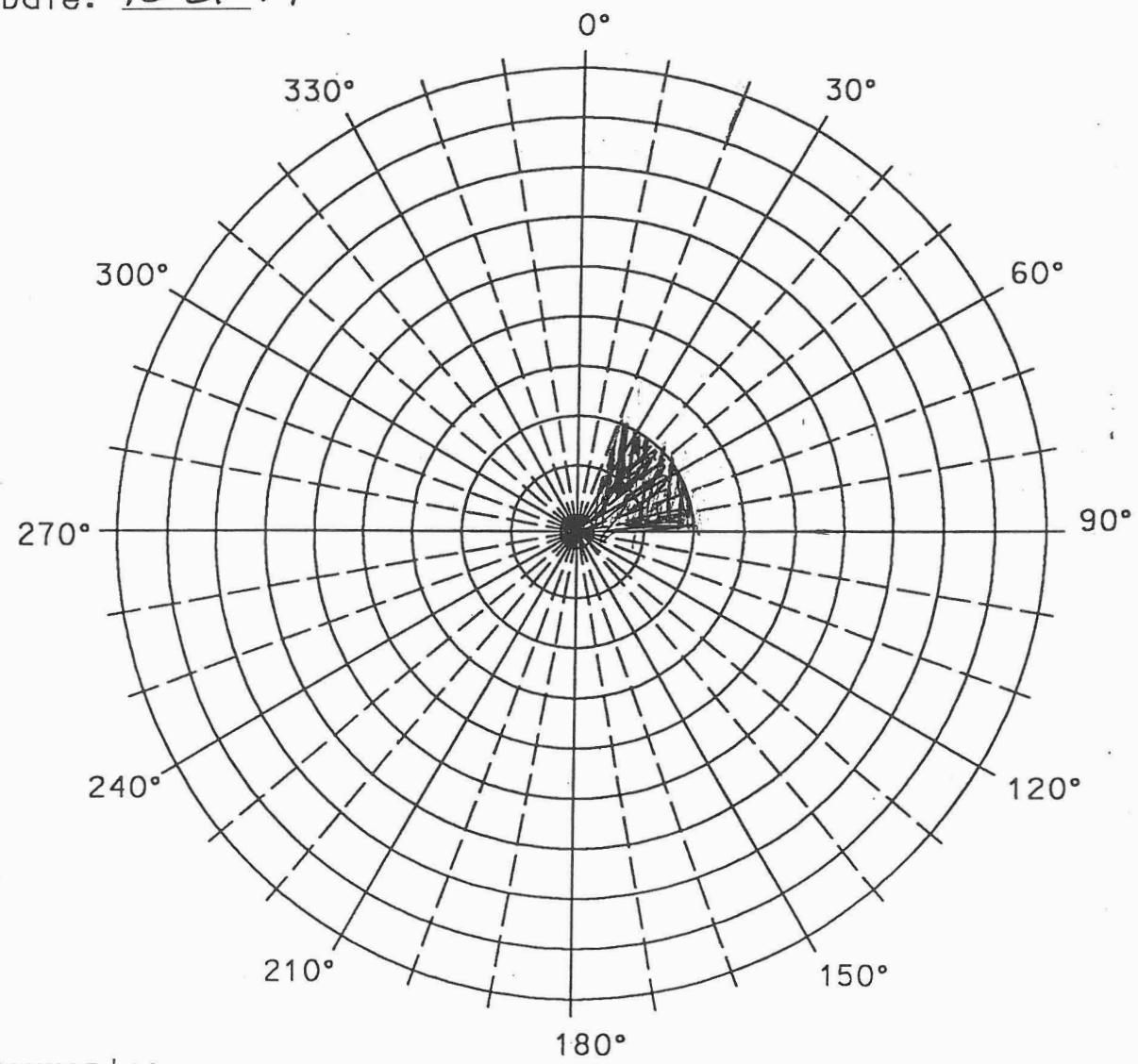

Comments:

FILL BANK OF DUMP

STATION / PANEL VISIBILITY DIAGRAM

Station Name: _____

Panel Number: 124

USGS Quad: CHANDLER HTS Latitude: 3675200

Described By: _____ Longitude: 438935

Date: 10-21-97

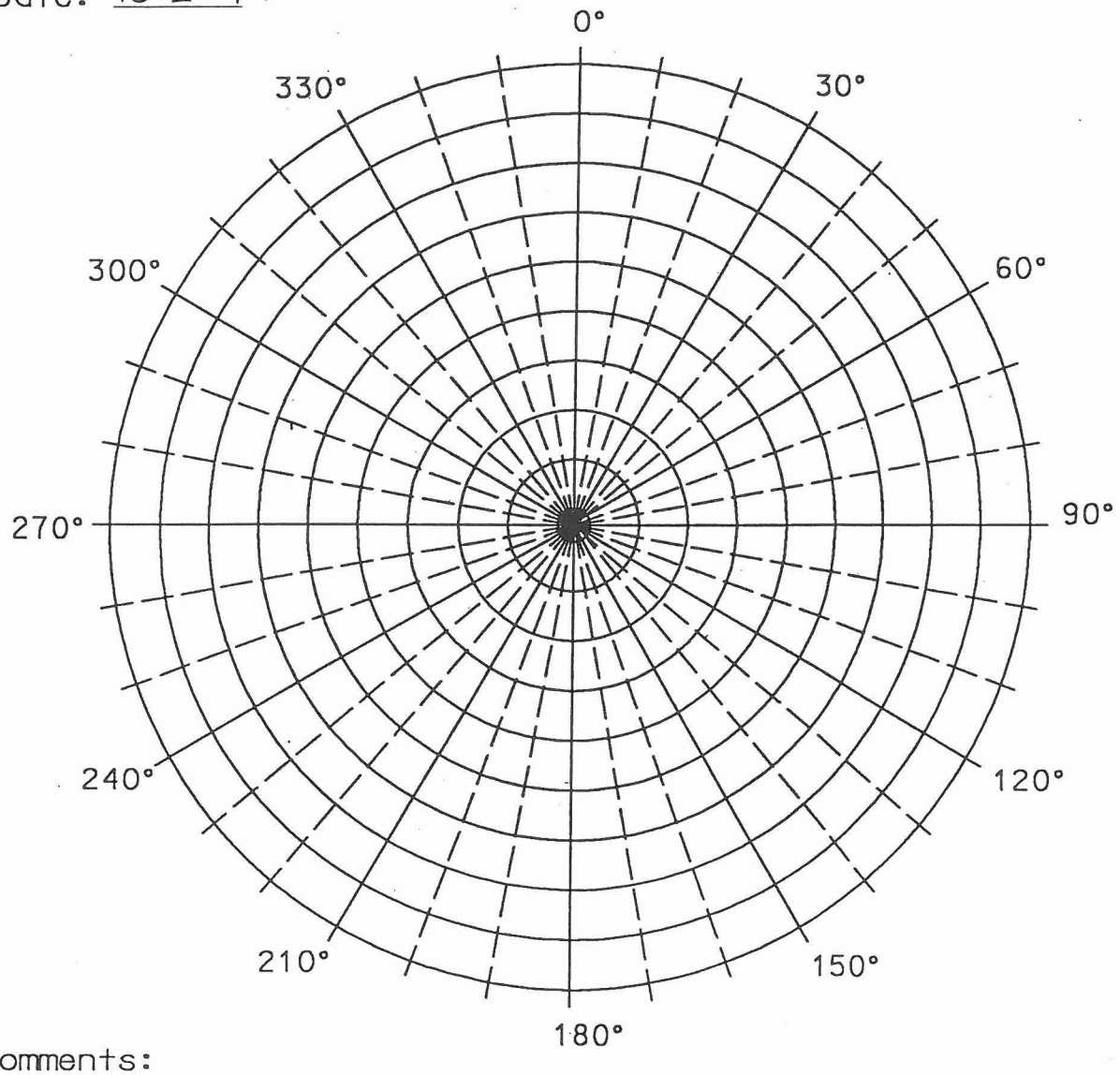

Comments:

NO OBSTRUCTIONS

STATION / PANEL VISIBILITY DIAGRAM

Station Name: _____

Panel Number: 125

USGS Quad: CHANDLER HTS Latitude: 3674795

Described By: _____ Longitude: 439290

Date: 10-21-97

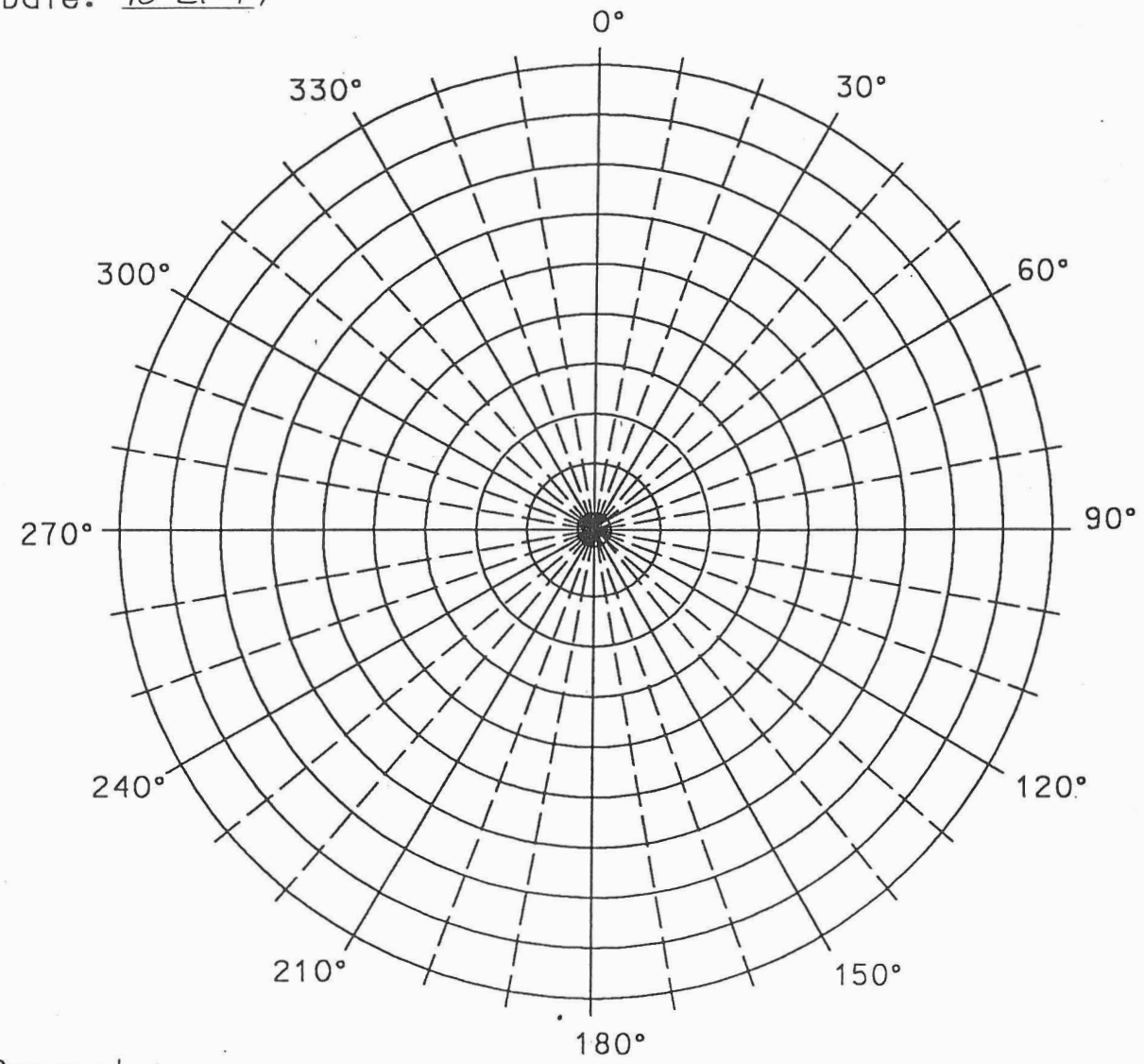

Comments:

NO OBSTRUCTIONS

STATION / PANEL VISIBILITY DIAGRAM

Station Name: _____

Panel Number: 126

USGS Quad: CHANDLER HTS Latitude: 3675225

Described By: _____ Longitude: 440125

Date: 10-21-97

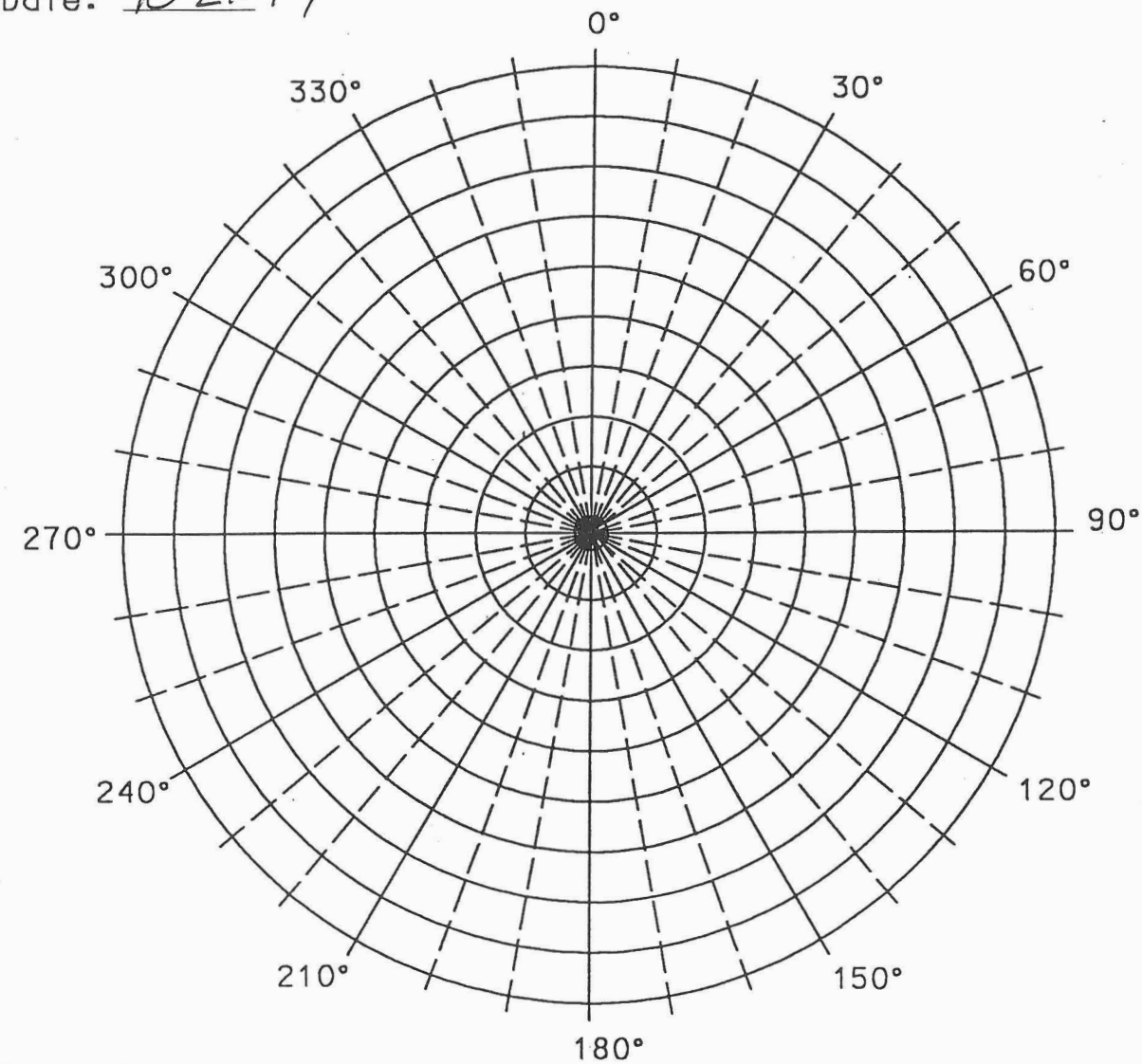

Comments:

NO OBSTRUCTIONS

STATION / PANEL VISIBILITY DIAGRAM

Station Name: _____

Panel Number: 127

USGS Quad: CHANDLER HTS Latitude: 3675615

Described By: _____ Longitude: 440935

Date: 10-21-97

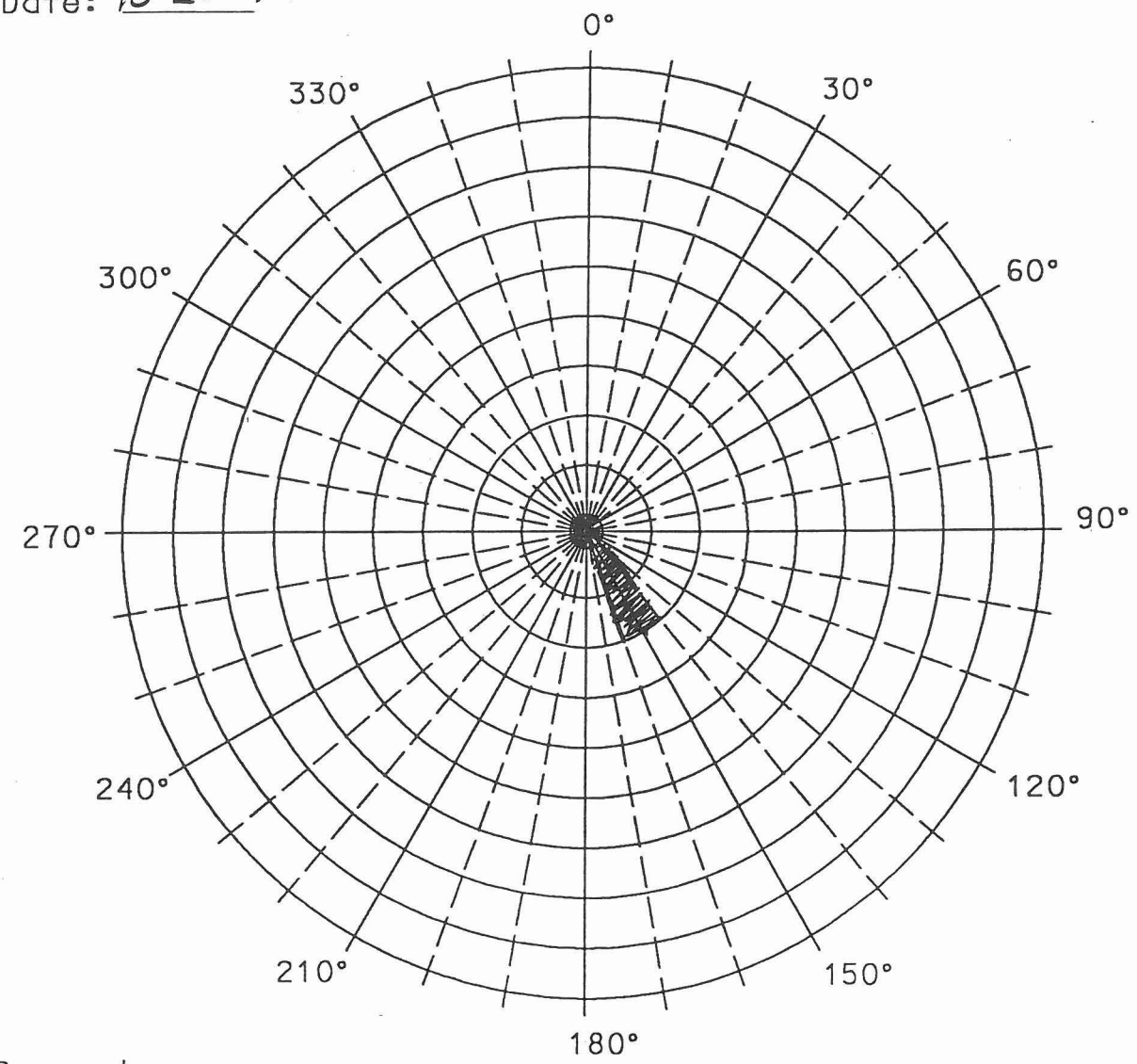

Comments:

TREE

STATION / PANEL VISIBILITY DIAGRAM

Station Name: _____

Panel Number: 128

USGS Quad: CHANDLER HTS Latitude: 367 4380

Described By: _____ Longitude: 439875

Date: 10-21-97

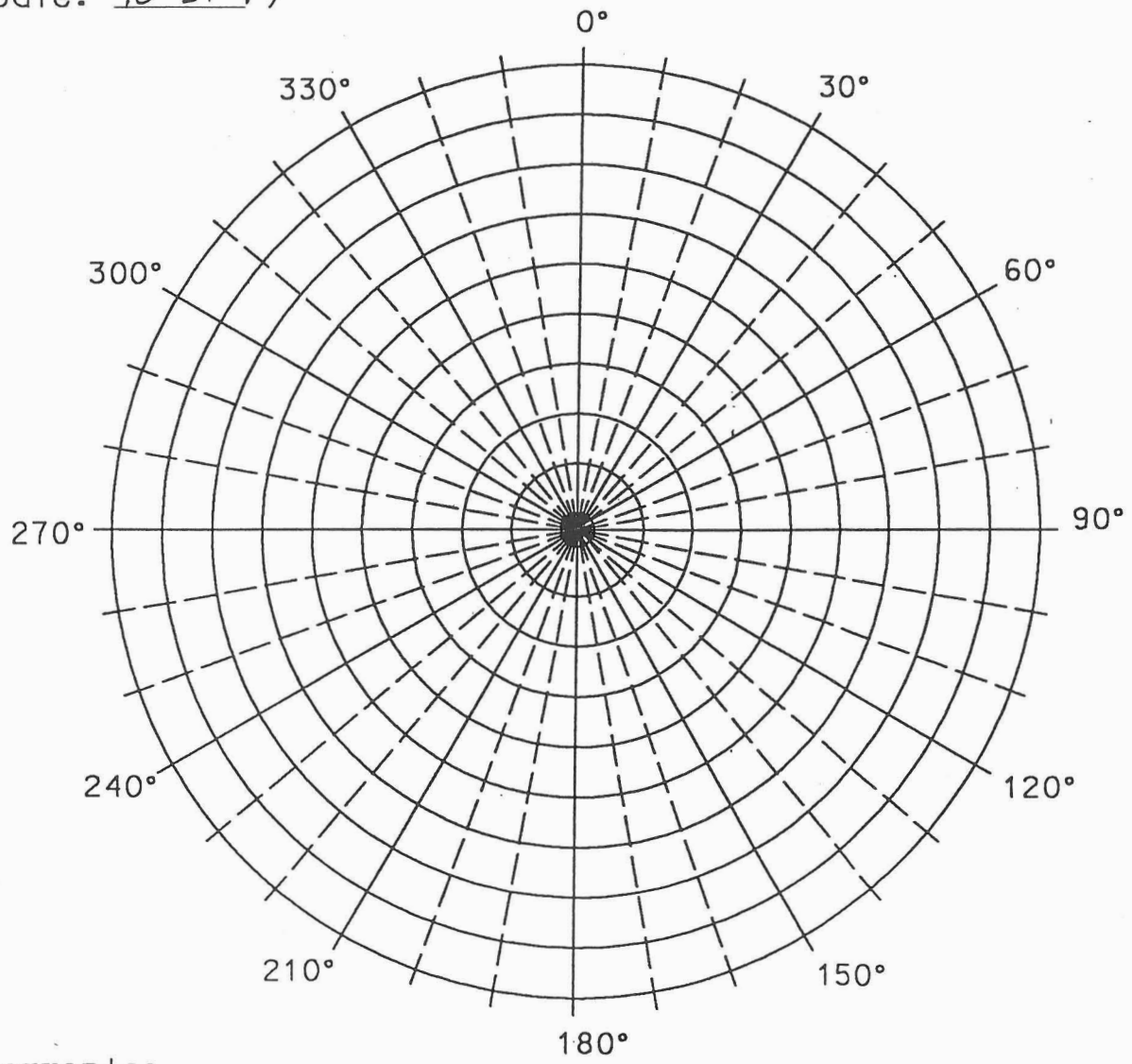

Comments:

NO OBSTRUCTIONS

STATION / PANEL VISIBILITY DIAGRAM

Station Name: _____

Panel Number: 129

USGS Quad: CHANDLER HTS Latitude: 3674380

Described By: _____ Longitude: 440520

Date: 10-21-97

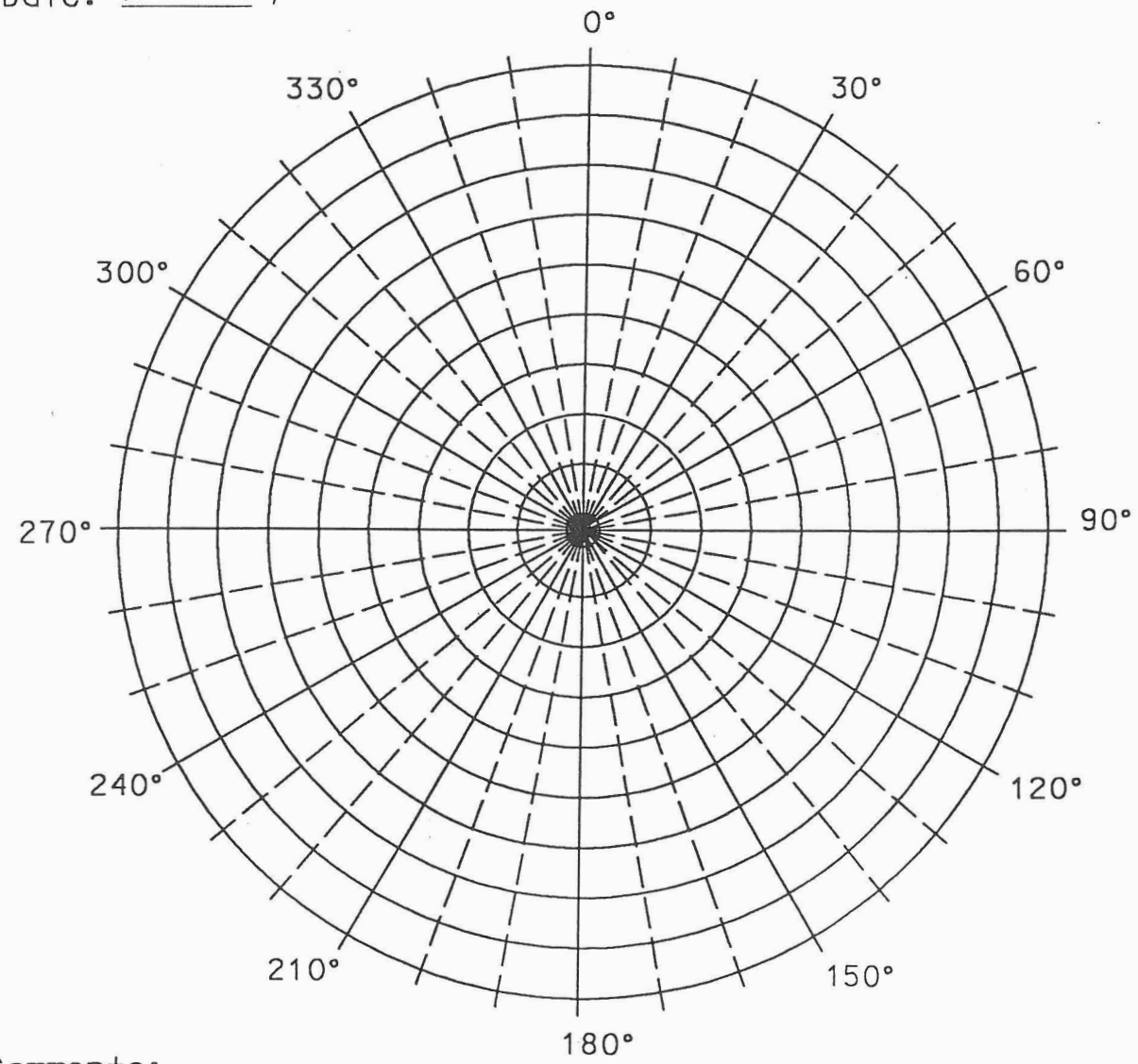

Comments:

NO OBSTRUCTIONS

STATION / PANEL VISIBILITY DIAGRAM

Station Name: _____

Panel Number: 130

USGS Quad: CHANDLER HTS Latitude: 3674800

Described By: _____ Longitude: 440925

Date: 10-21-97

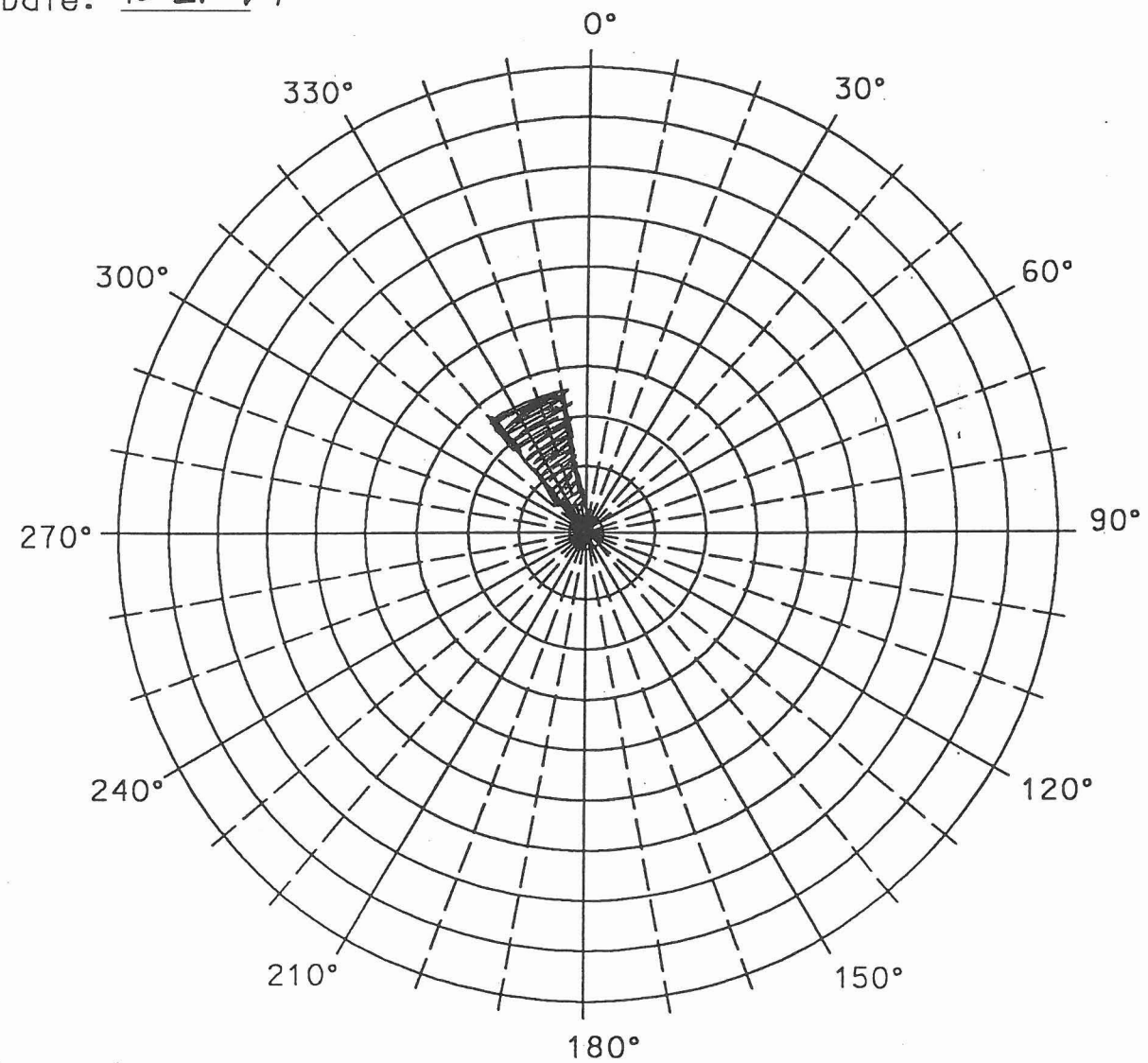

Comments:

TREES

STATION / PANEL VISIBILITY DIAGRAM

Station Name: _____

Panel Number: 131

USGS Quad: CHANDLER HTS Latitude: 3674775

Described By: _____ Longitude: 441670

Date: 10-21-97

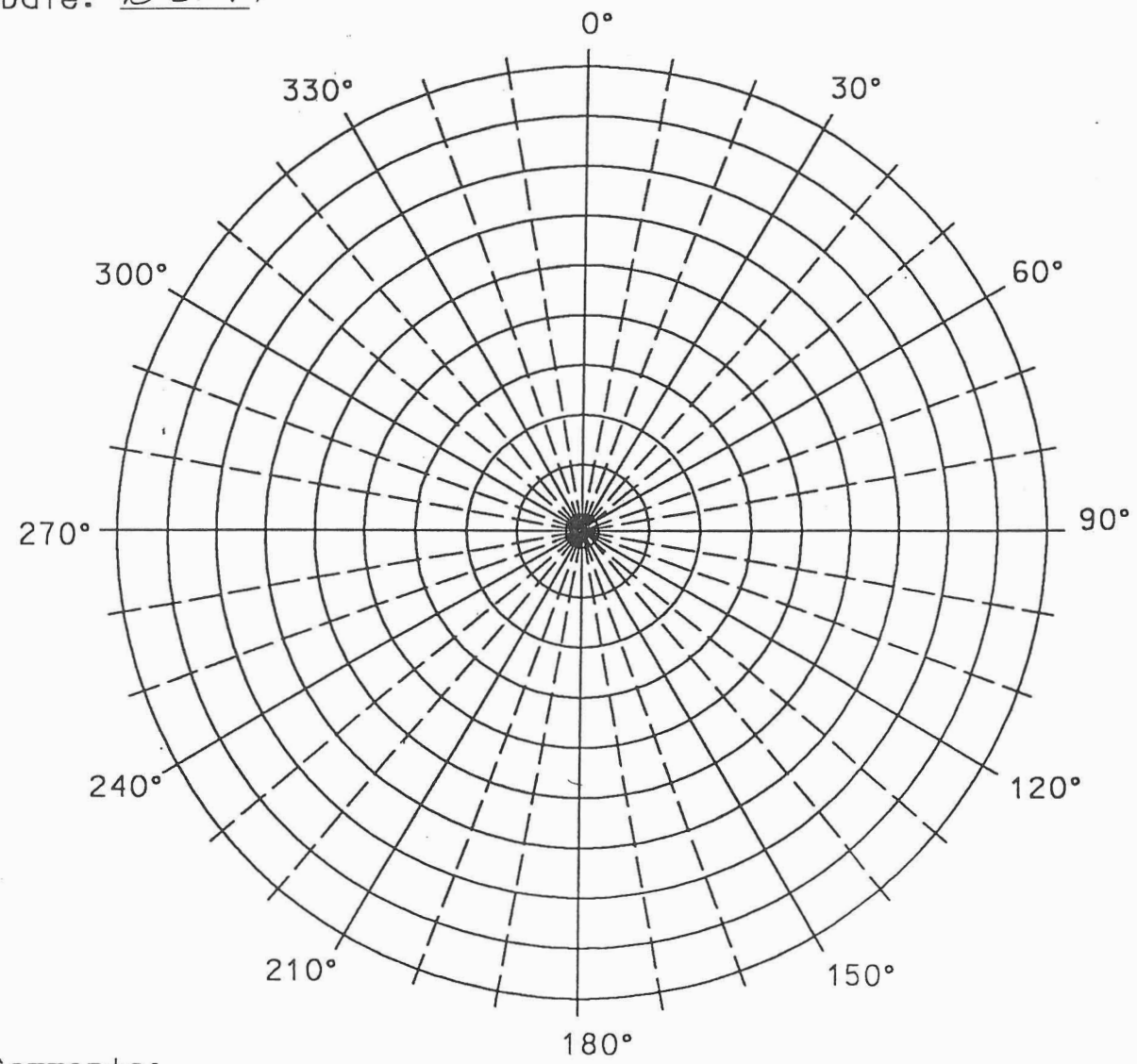

Comments:

NO OBSTRUCTIONS

STATION / PANEL VISIBILITY DIAGRAM

Station Name: _____

Panel Number: 132

USGS Quad: CHANDLER HTS Latitude: 3674385

Described By: _____ Longitude: 441300

Date: 10-21-97

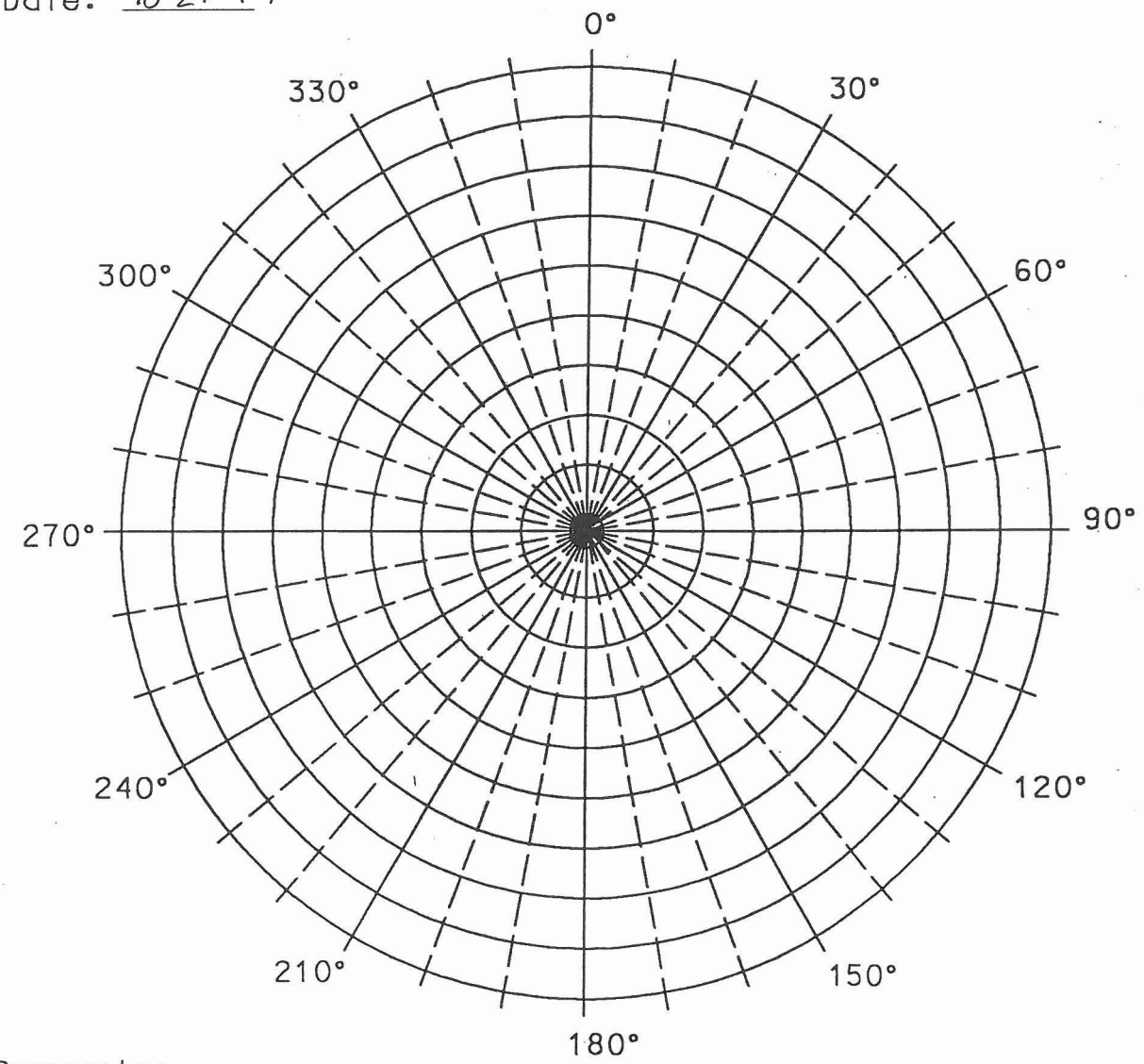

Comments:

NO OBSTRUCTION

STATION / PANEL VISIBILITY DIAGRAM

Station Name: _____

Panel Number: 133

USGS Quad: CHANDLER HTS Latitude: 3674005

Described By: _____ Longitude: 441335

Date: 10-21-97

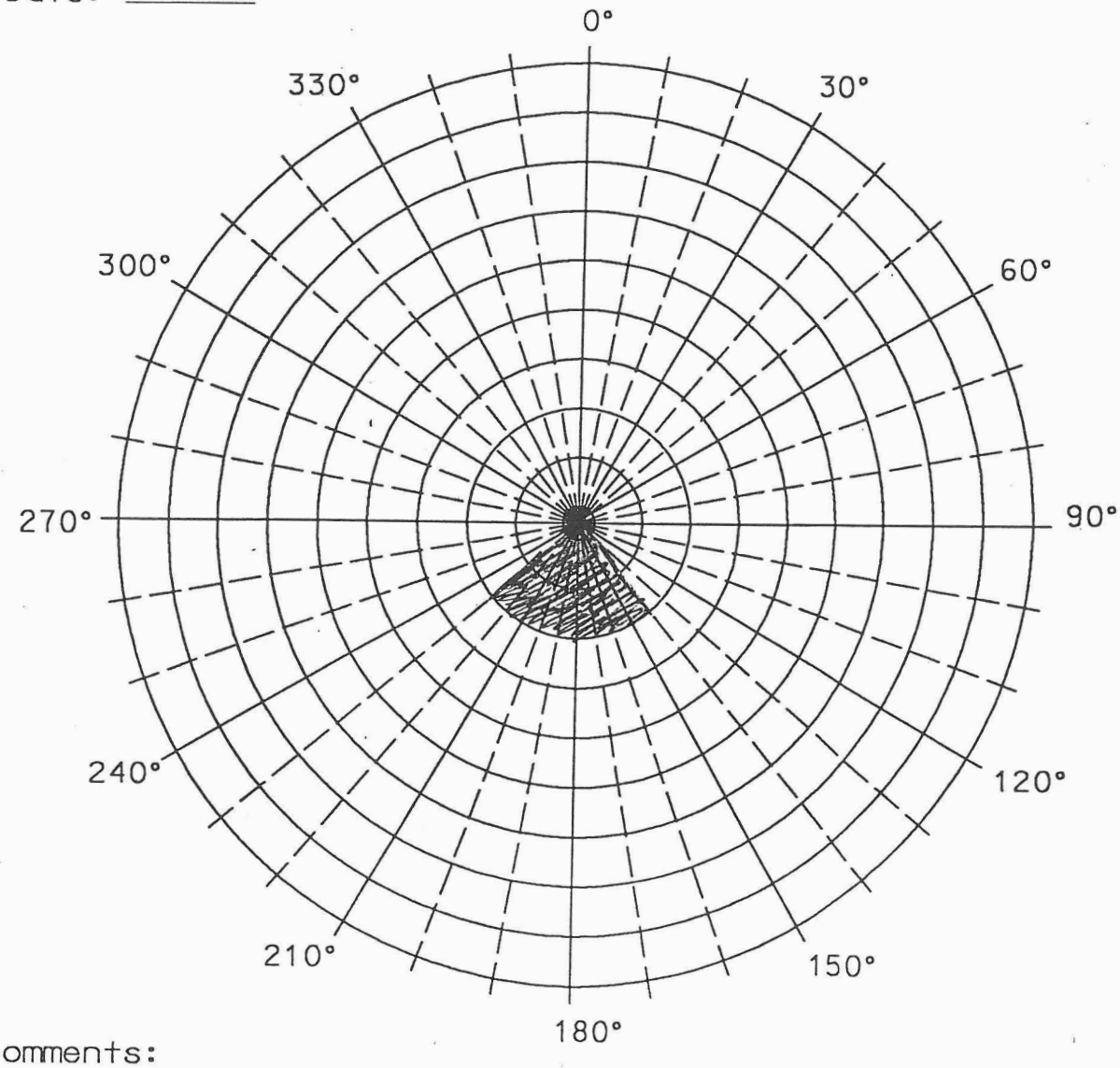

Comments:

TREES + MOUNTAINS

STATION / PANEL VISIBILITY DIAGRAM

Station Name: _____

Panel Number: 134

USGS Quad: CHANDLER HTS. Latitude: 3673625

Described By: _____ Longitude: 440915

Date: 10-21-97

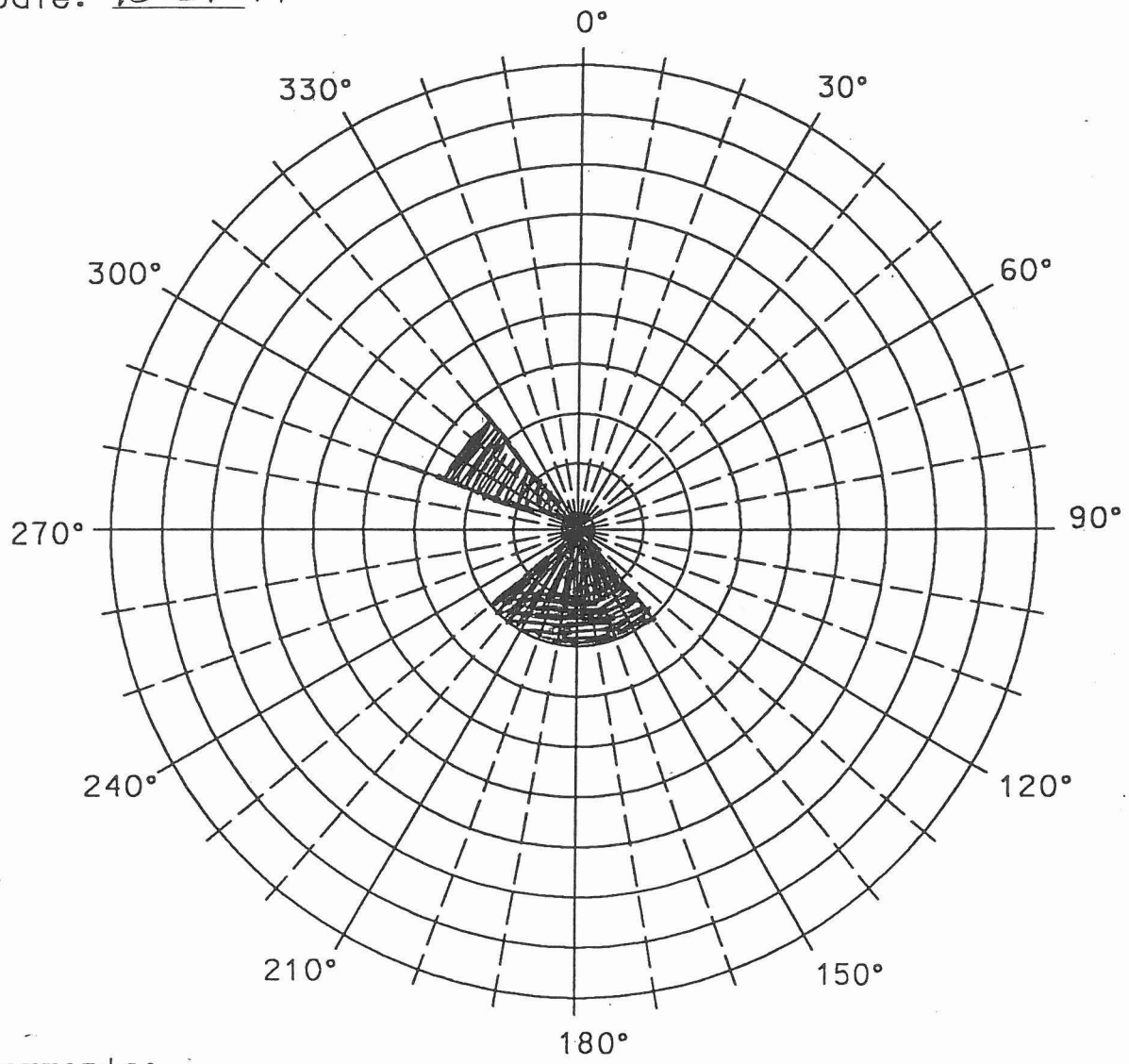

Comments:

TREE + MOUNTAINS

STATION / PANEL VISIBILITY DIAGRAM

Station Name: _____

Panel Number: 200

USGS Quad: HIGLEY Latitude: 3679650

Described By: _____ Longitude: 432925

Date: 10-14-97

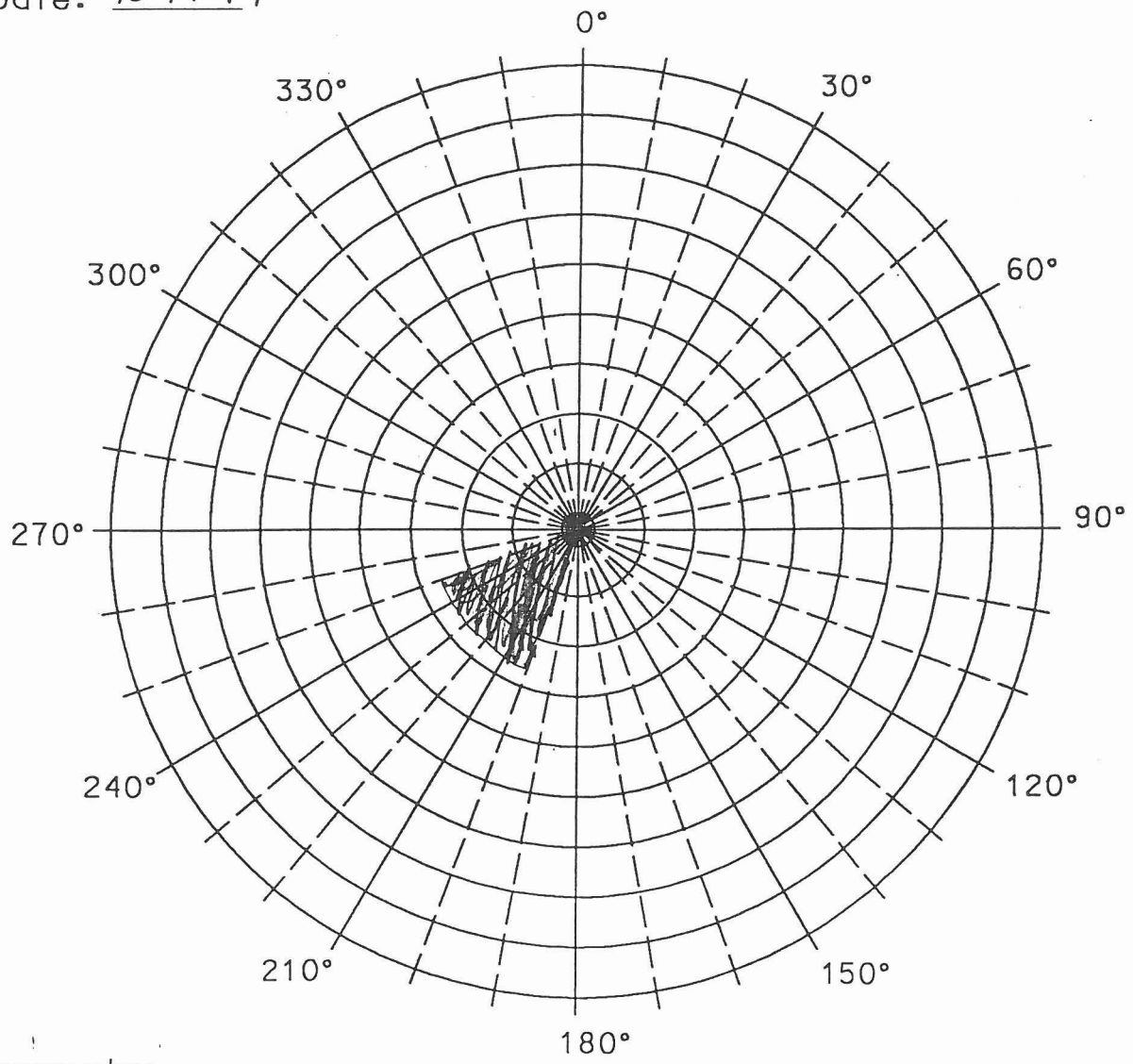

Comments:

TREES

STATION / PANEL VISIBILITY DIAGRAM

Station Name: _____

Panel Number: 202

USGS Quad: HIGLEY Latitude: 3679100

Described By: _____ Longitude: 432925

Date: 10-14-97

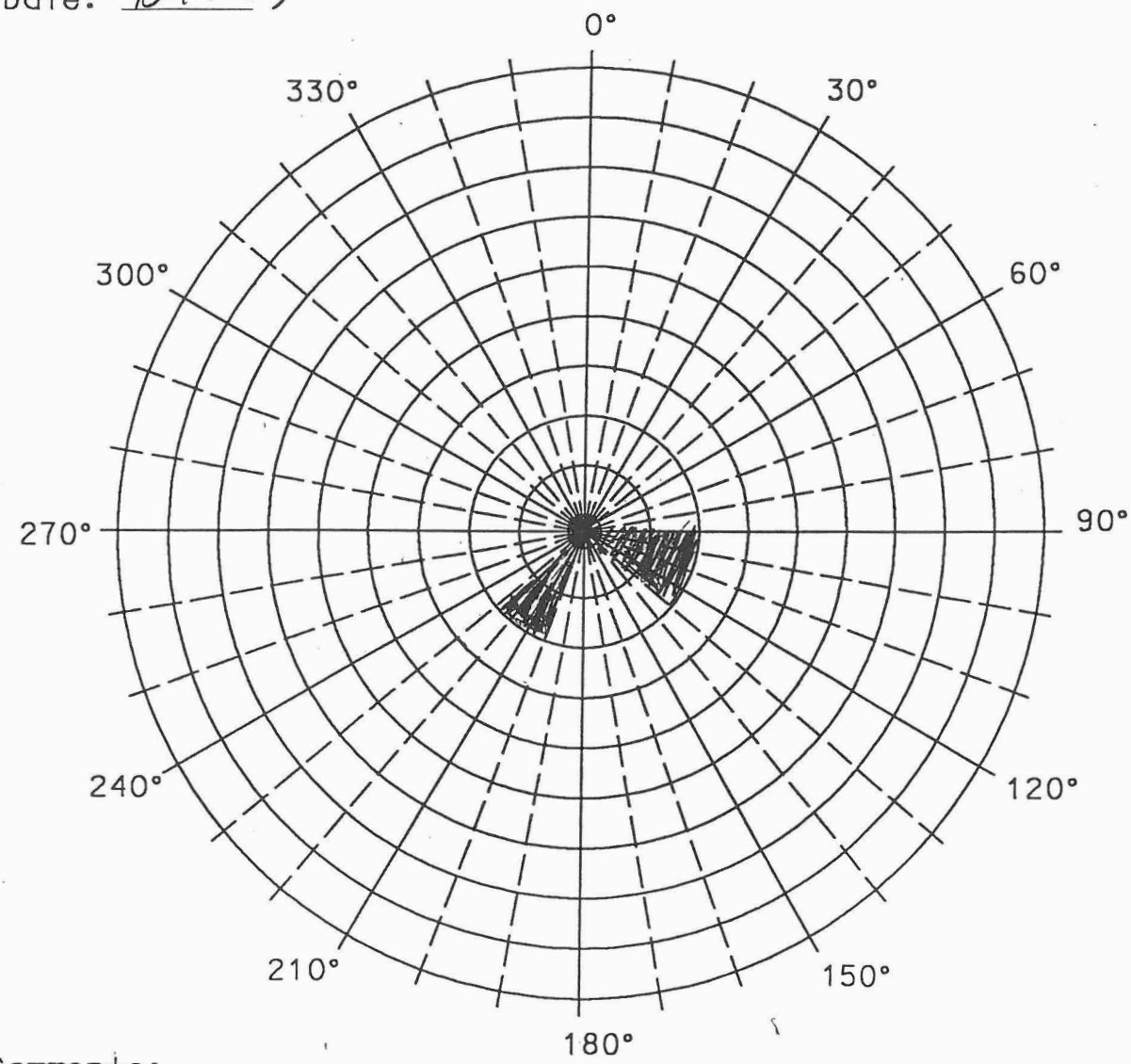

Comments:

TREES

STATION / PANEL VISIBILITY DIAGRAM

Station Name: _____

Panel Number: 201.

USGS Quad: CHANDLER HTS Latitude: 3678880

Described By: _____ Longitude: 432945

Date: 10-14-97

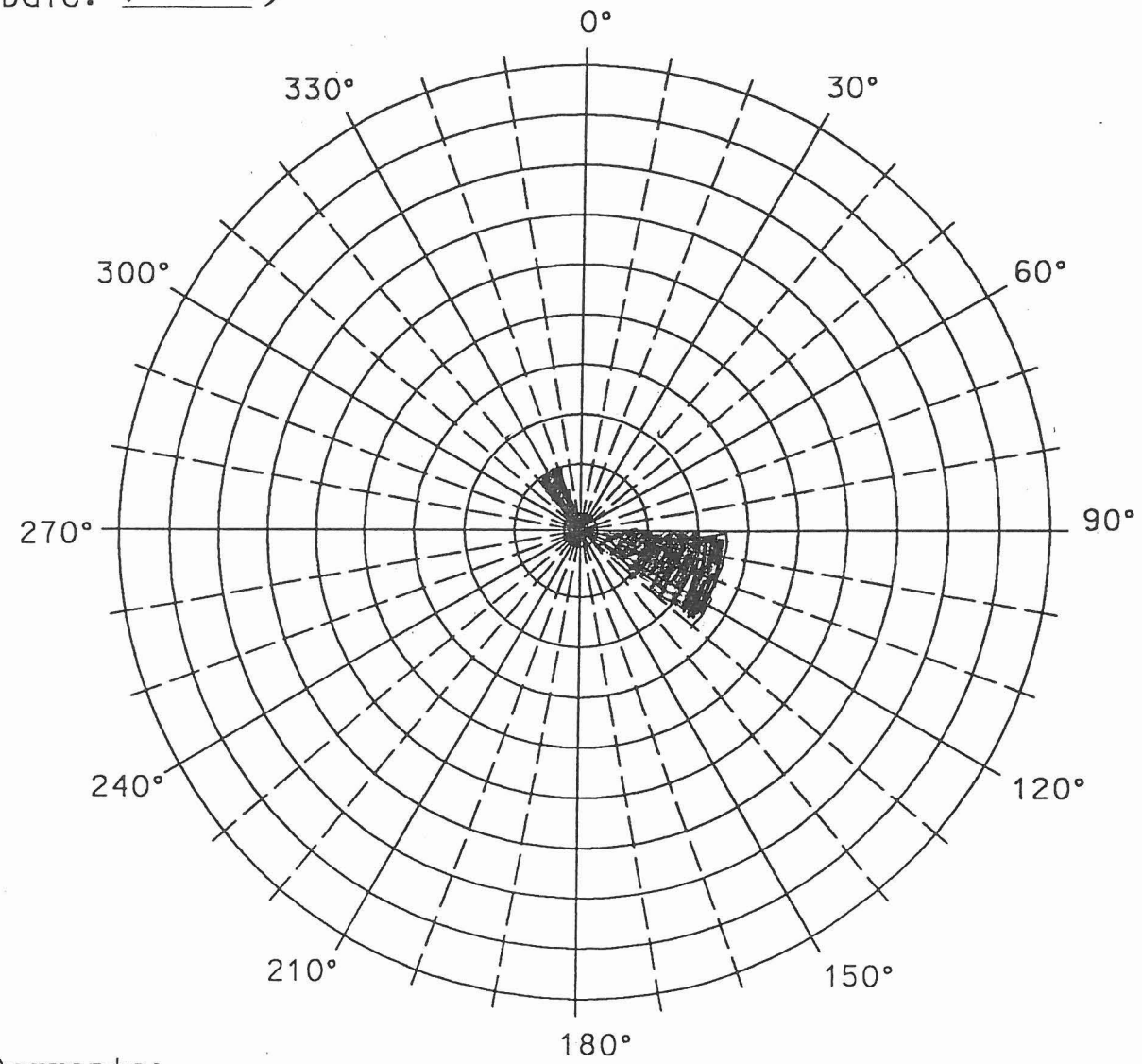

Comments: TREES

STATION / PANEL VISIBILITY DIAGRAM

Station Name: _____

Panel Number: 203

USGS Quad: CHANDLER HTS Latitude: 3678615

Described By: _____ Longitude: 432945

Date: 10-14-97

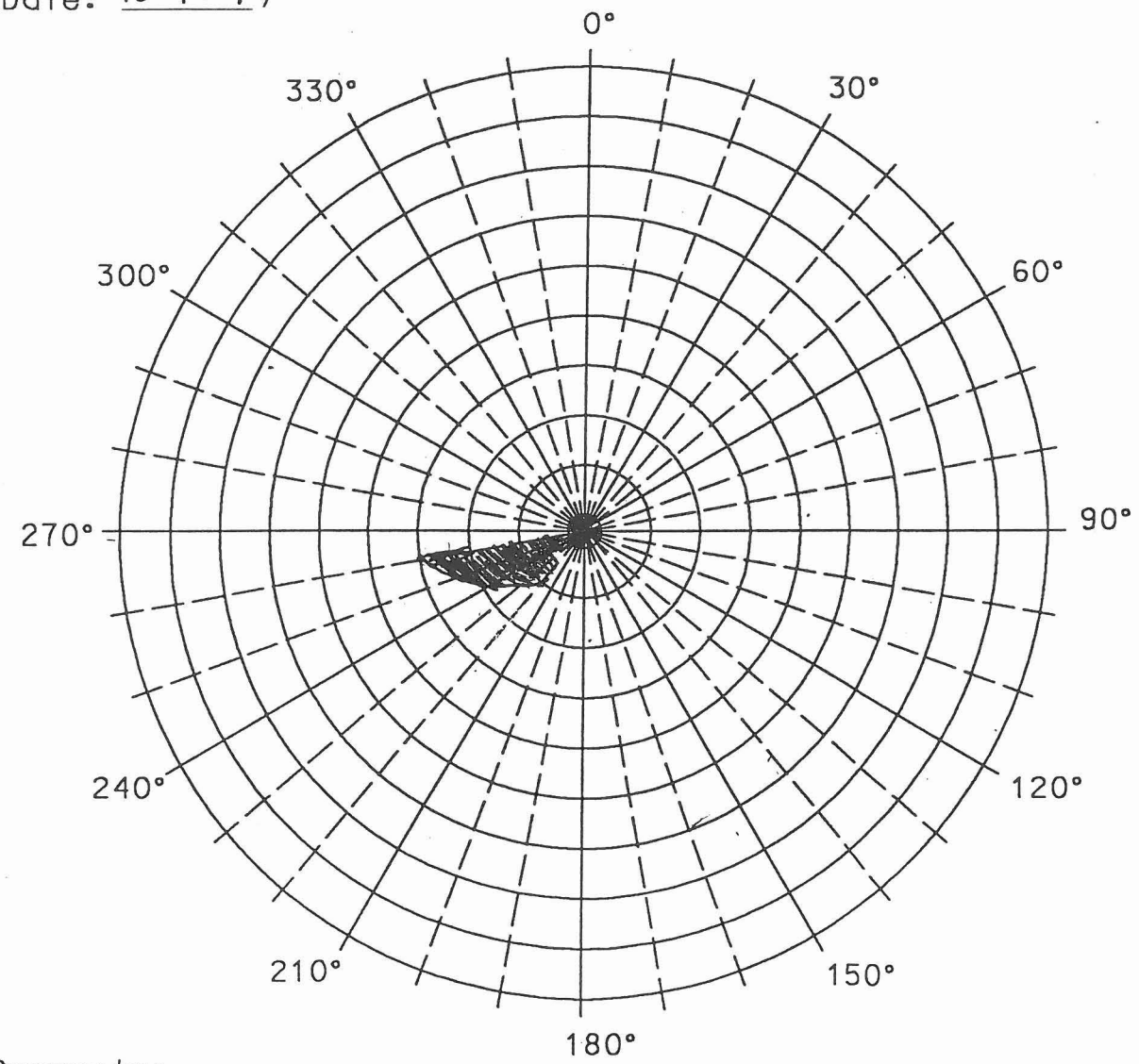

Comments:

HEDGE

STATION / PANEL VISIBILITY DIAGRAM

Station Name: _____

Panel Number: 204

USGS Quad: CHANDLER HTS. Latitude: 3678050

Described By: _____ Longitude: 432945

Date: 10-14-97

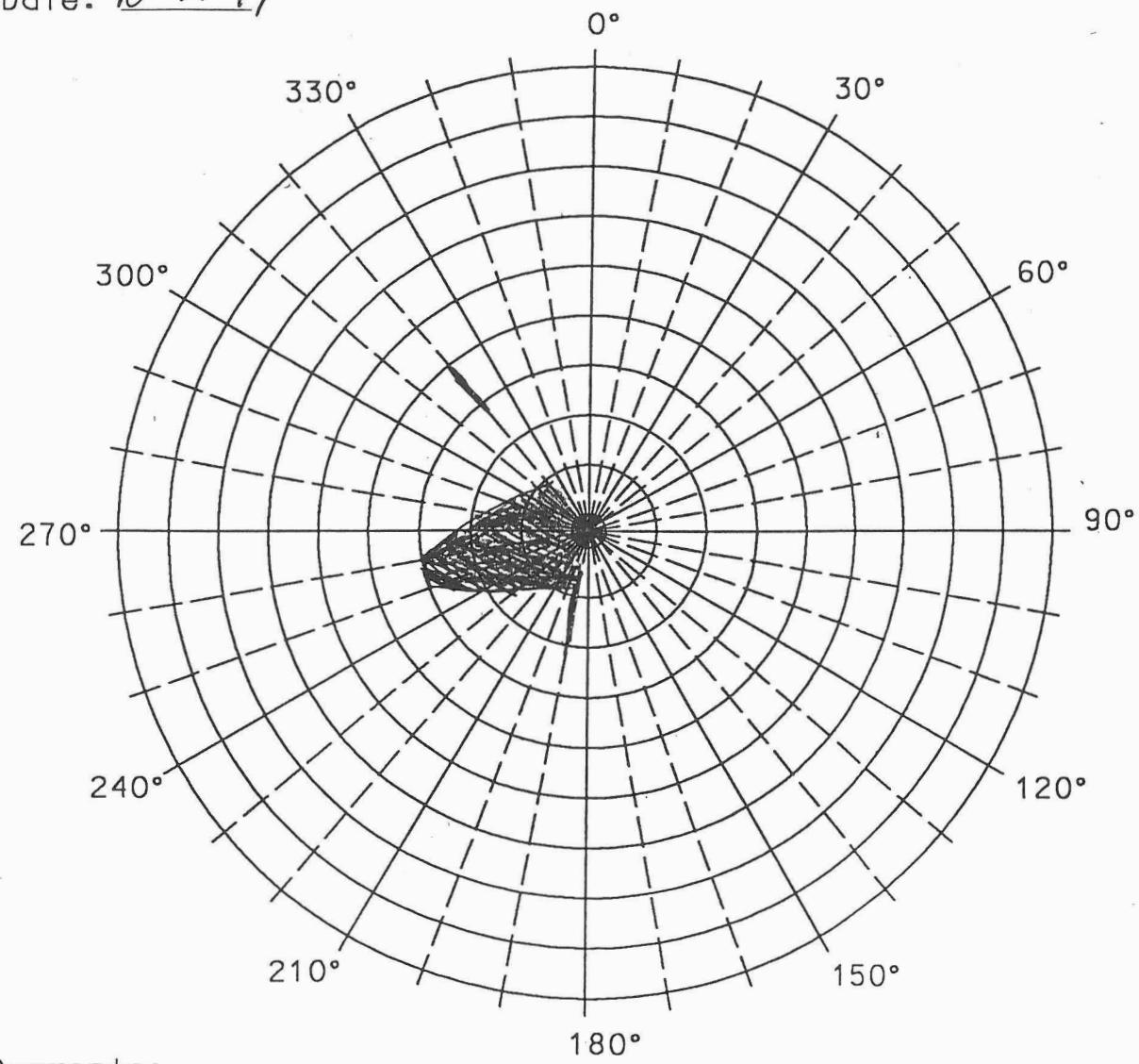

Comments:

HEDGE

STATION / PANEL VISIBILITY DIAGRAM

Station Name: _____

Panel Number: 205

USGS Quad: CHANDLER HTS. Latitude: 3678055

Described By: _____ Longitude: 433750

Date: 10-23-97

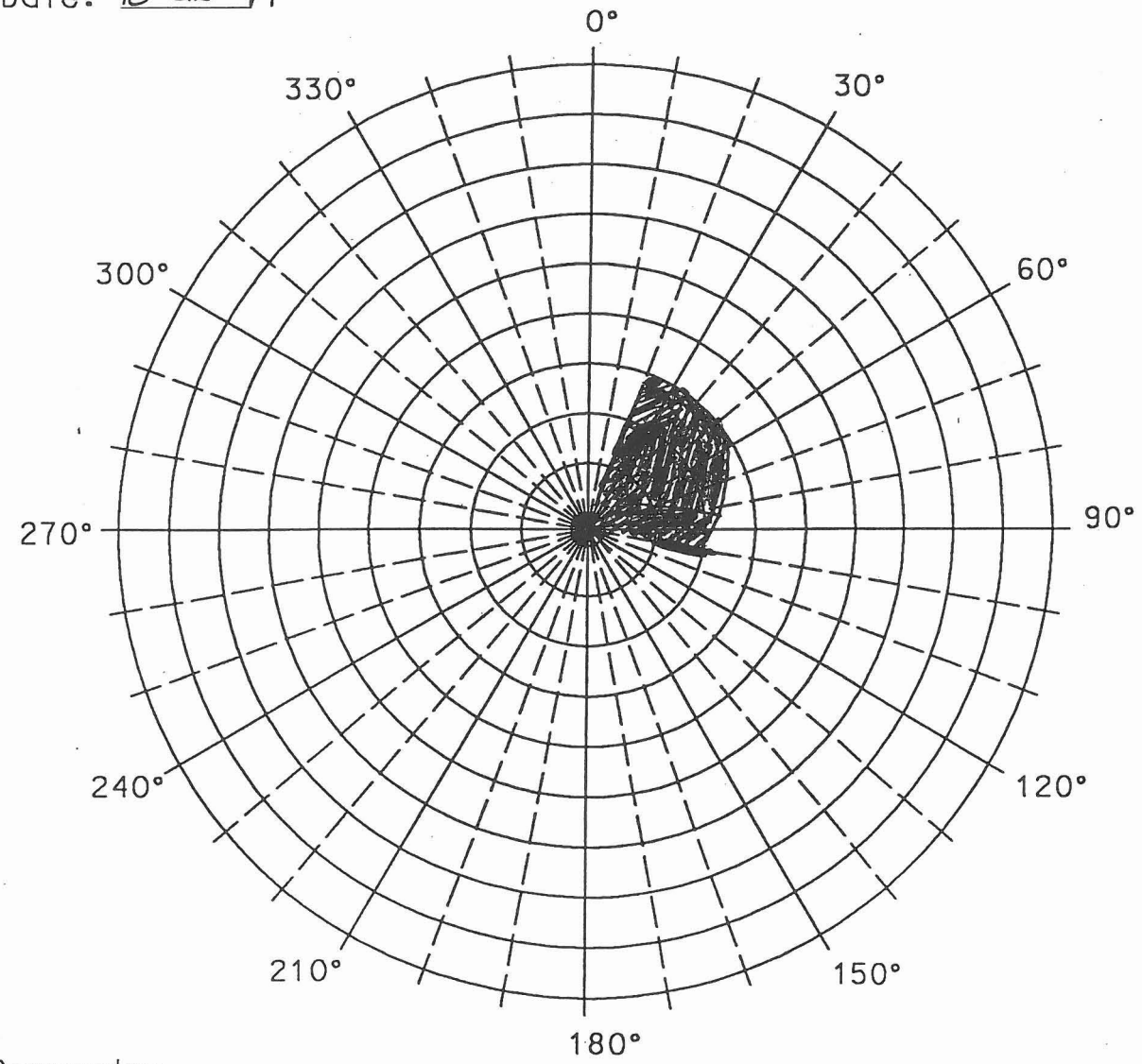

Comments:

TREES

STATION / PANEL VISIBILITY DIAGRAM

Station Name: _____

Panel Number: 206

USGS Quad: HIGLEY Latitude: 3678860

Described By: _____ Longitude: 433740

Date: 10-23-97

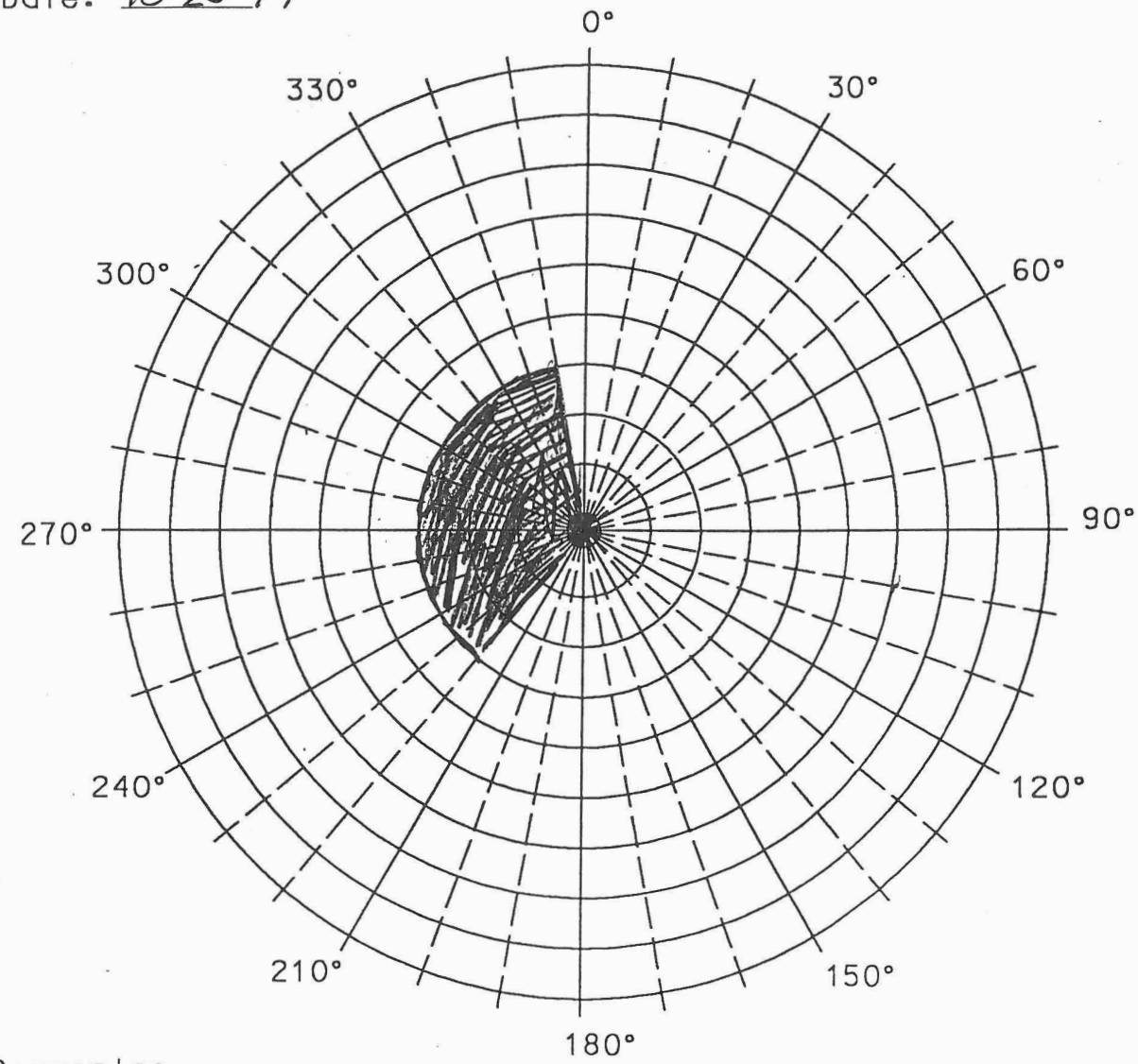

Comments:

TREES

STATION / PANEL VISIBILITY DIAGRAM

Station Name: _____

Panel Number: 207

USGS Quad: CHANDLER HTS. Latitude: 3679070

Described By: _____ Longitude: 433760

Date: 10-23-97

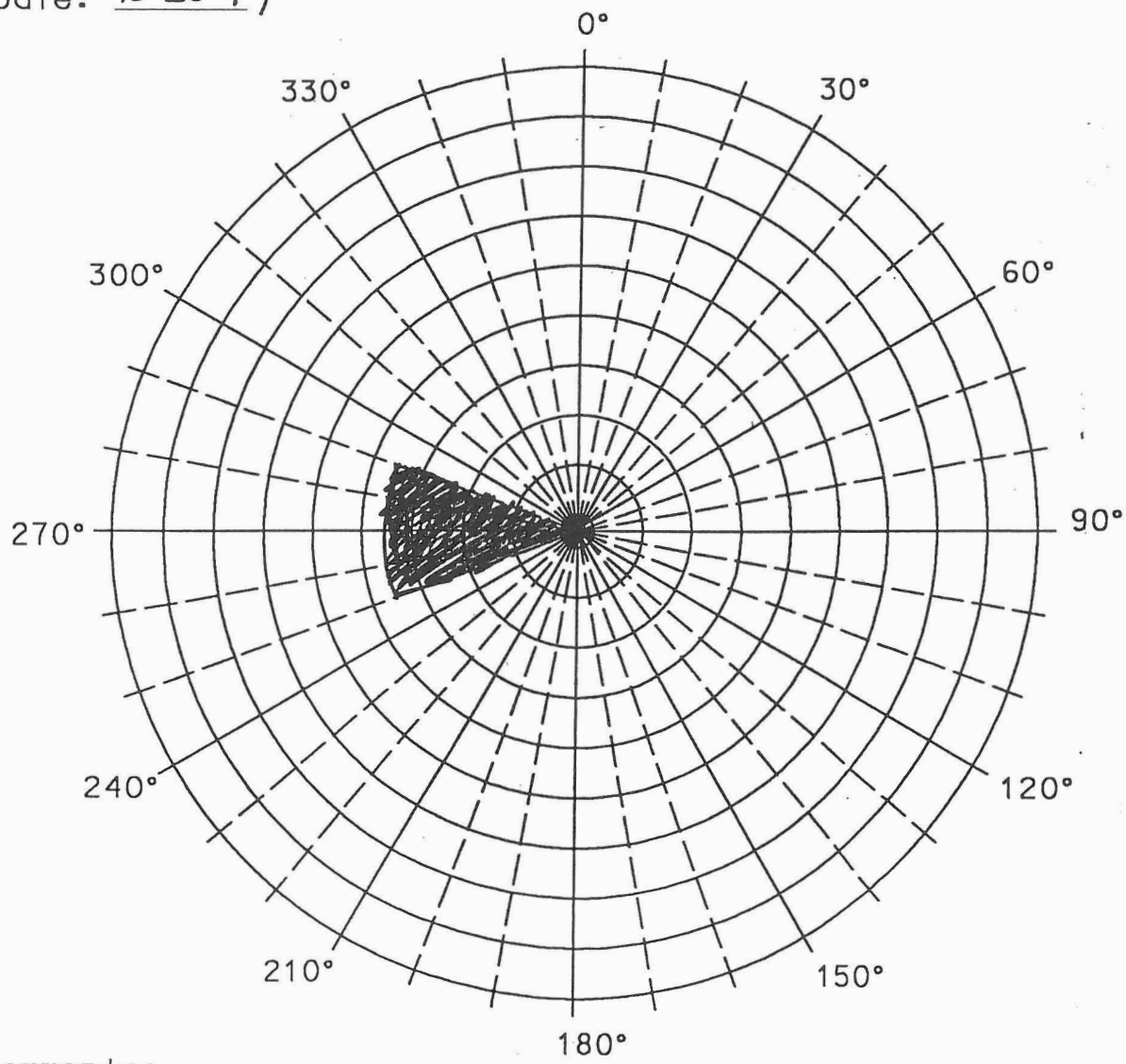

Comments:
TREE

STATION / PANEL VISIBILITY DIAGRAM

Station Name: _____

Panel Number: 208

USGS Quad: HIGLEY Latitude: 3679663

Described By: _____ Longitude: 433760

Date: 10-23-97

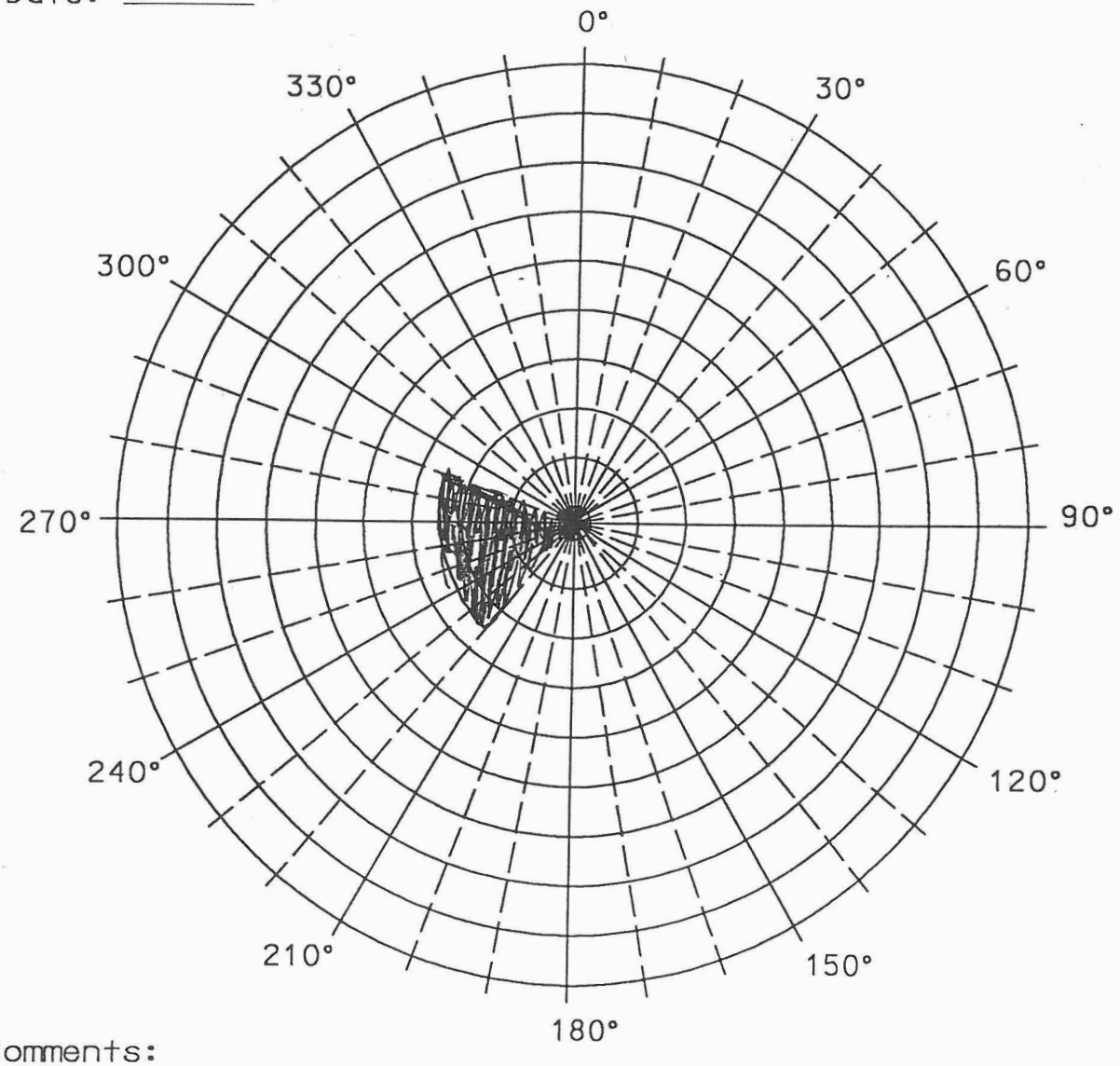

Comments:

TREES

STATION / PANEL VISIBILITY DIAGRAM

Station Name: _____

Panel Number: 209

USGS Quad: HIGLEY Latitude: 3679685

Described By: _____ Longitude: 434550

Date: 10-23-97

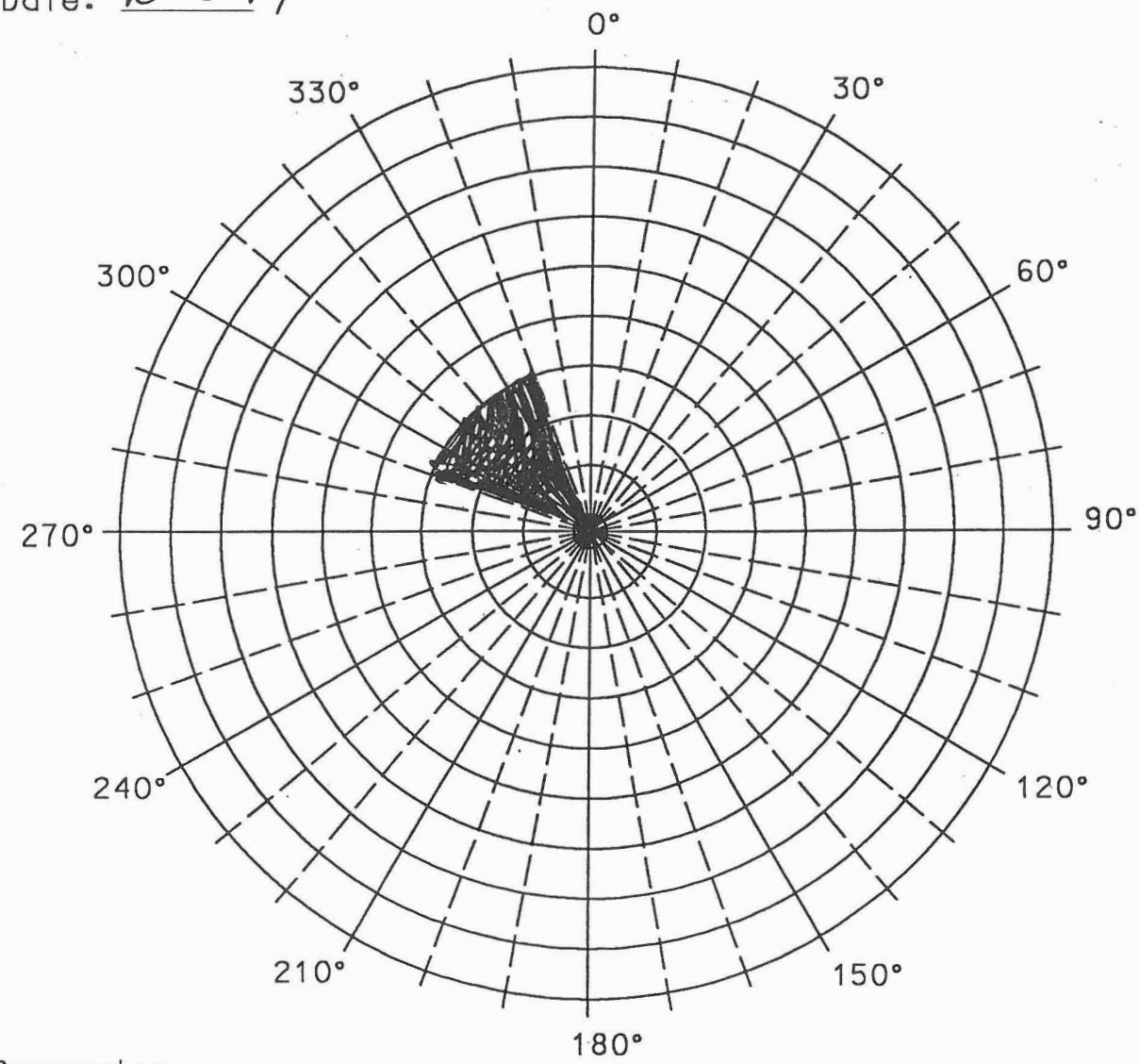

Comments:

TREES

STATION / PANEL VISIBILITY DIAGRAM

Station Name: _____

Panel Number: 210

USGS Quad: HIGLEY Latitude: 3679075

Described By: _____ Longitude: 434550

Date: 10-23-97

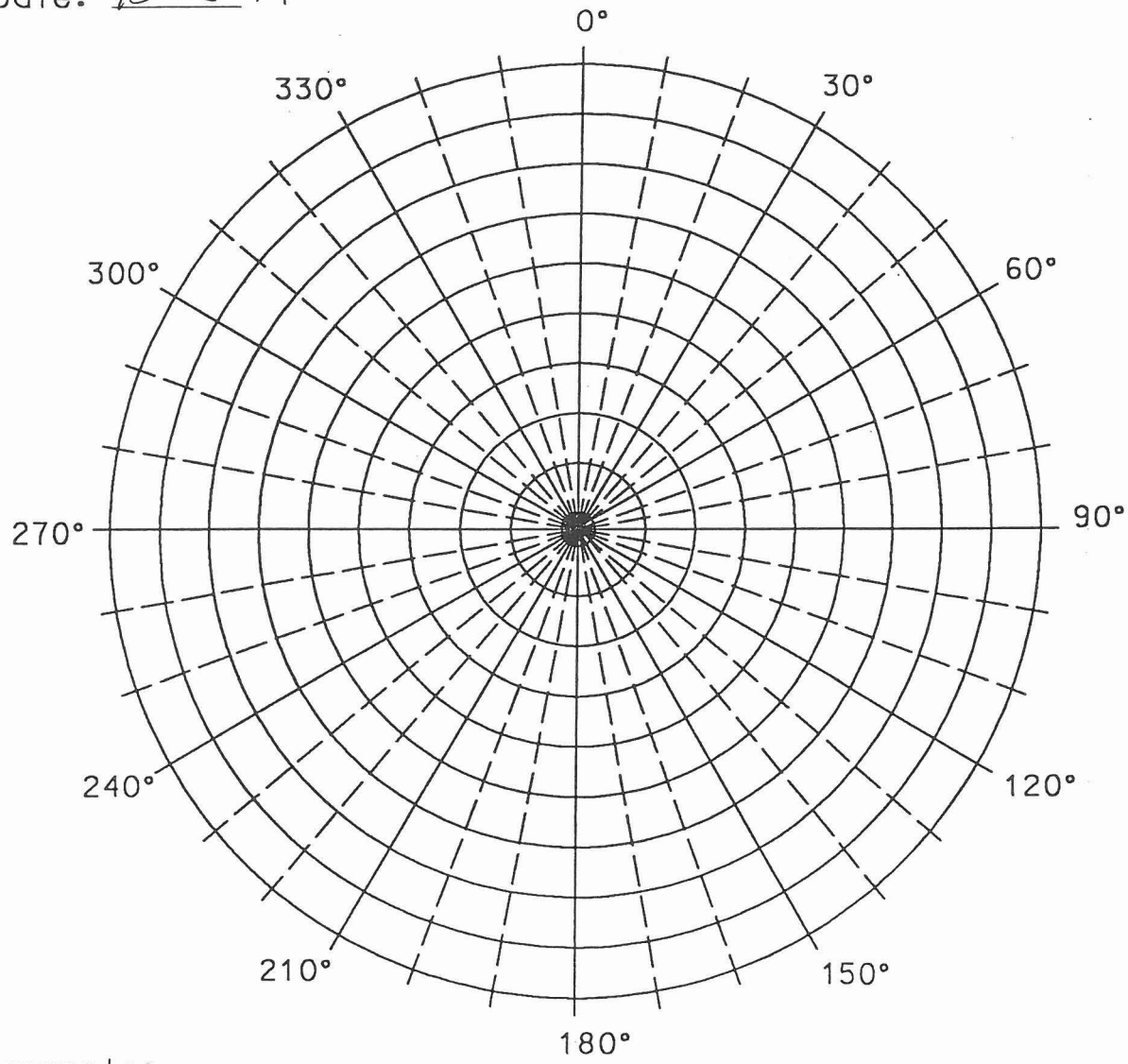

Comments:

NO OBSTRUCTIONS

STATION / PANEL VISIBILITY DIAGRAM

Station Name: _____

Panel Number: 211

USGS Quad: CHANDLER HTS · Latitude: 3678875

Described By: _____ Longitude: 434550

Date: 10-23-97

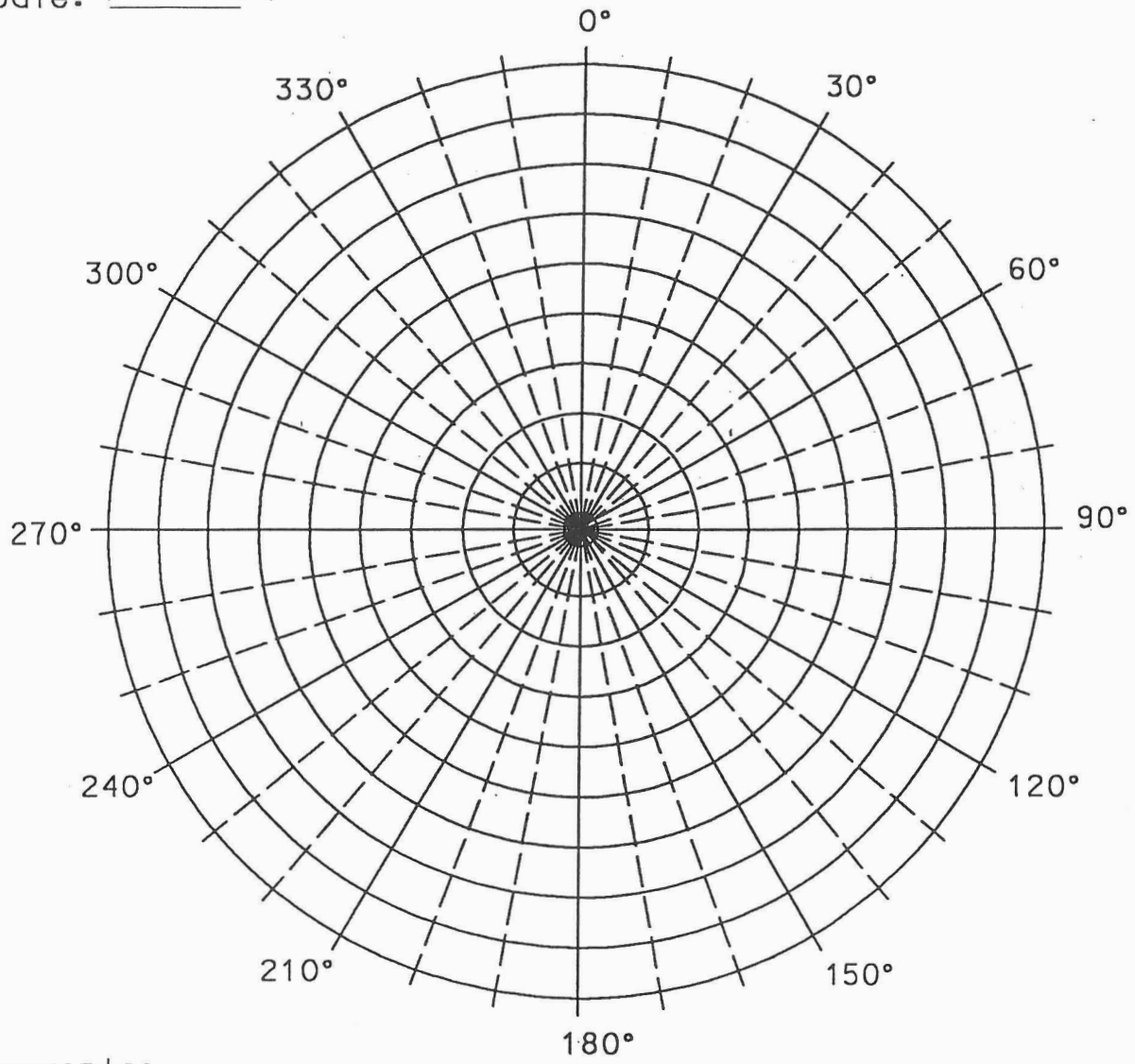

Comments:
NO OBSTRUCTIONS

STATION / PANEL VISIBILITY DIAGRAM

Station Name: _____

Panel Number: 212

USGS Quad: CHANDLER HTS. Latitude: 3678680

Described By: _____ Longitude: 434550

Date: 10-23-97

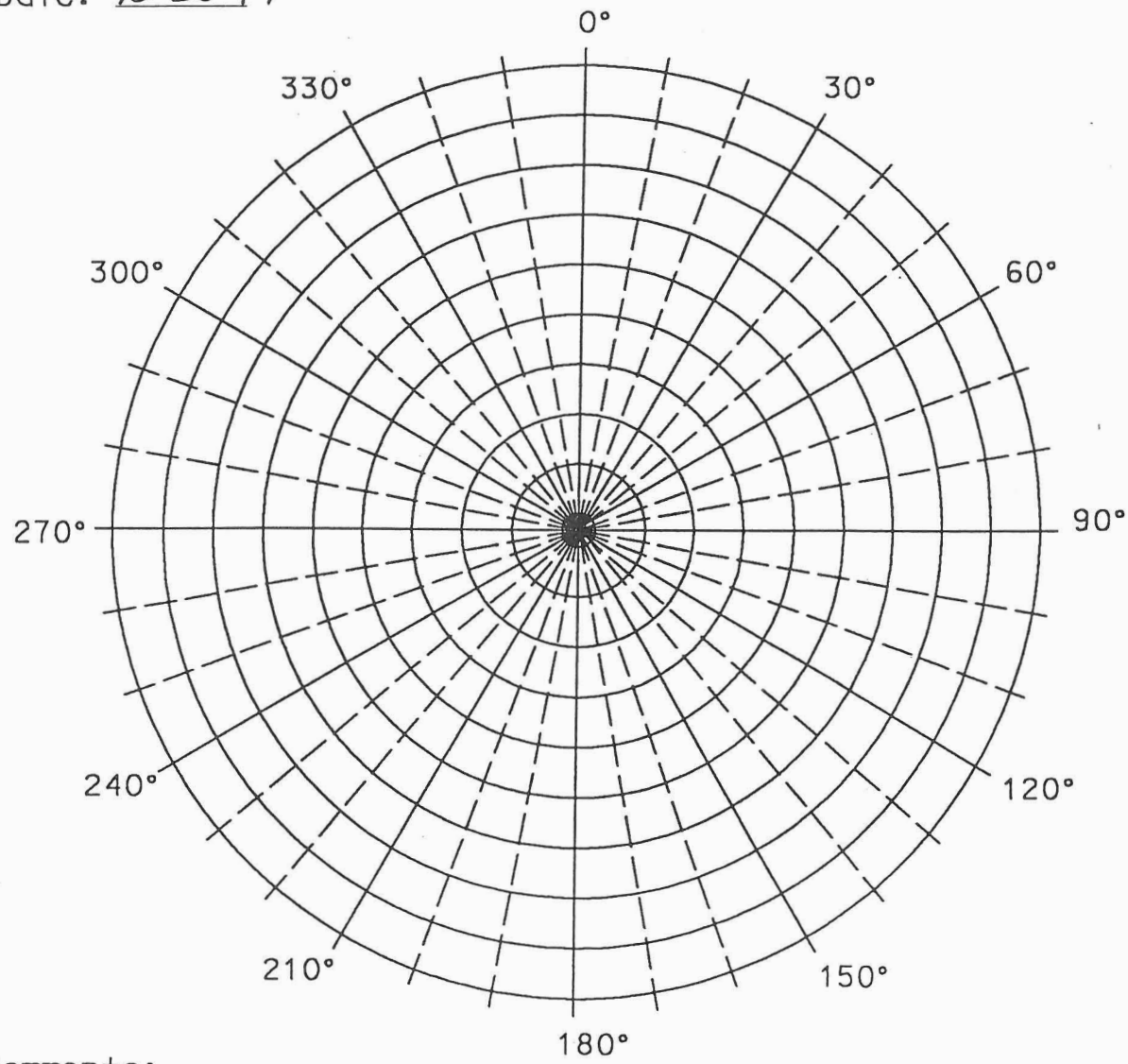

Comments:

No OBSTRUCTIONS

STATION / PANEL VISIBILITY DIAGRAM

Station Name: _____

Panel Number: 213

USGS Quad: CHANDLER HTS. Latitude: 3678055

Described By: _____ Longitude: 434550

Date: 10-23-97

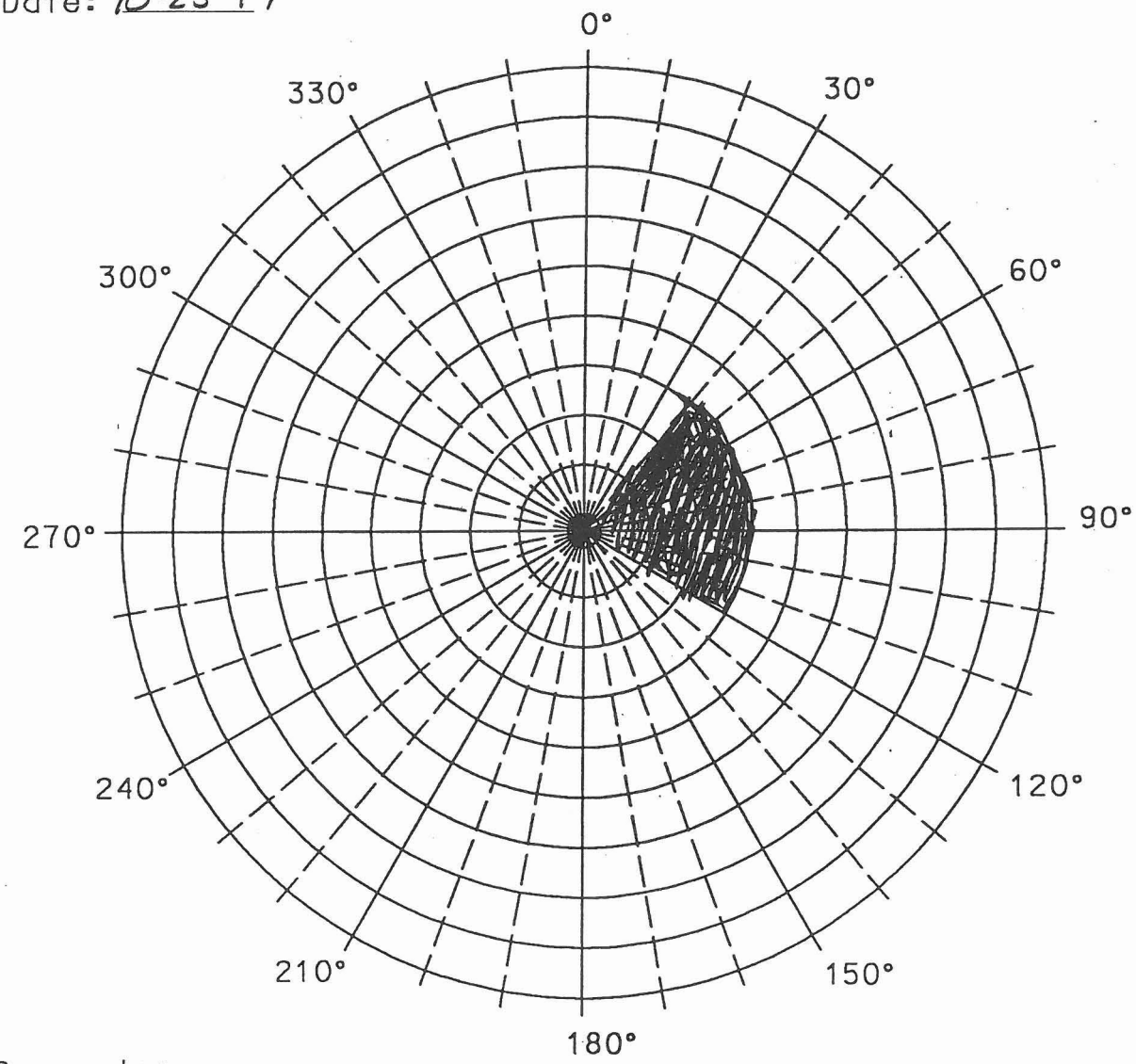

Comments:

TREES

STATION / PANEL VISIBILITY DIAGRAM

Station Name: _____

Panel Number: 214

USGS Quad: CHANDLER HTS. Latitude: 3678075

Described By: _____ Longitude: 435375

Date: 10-20-97

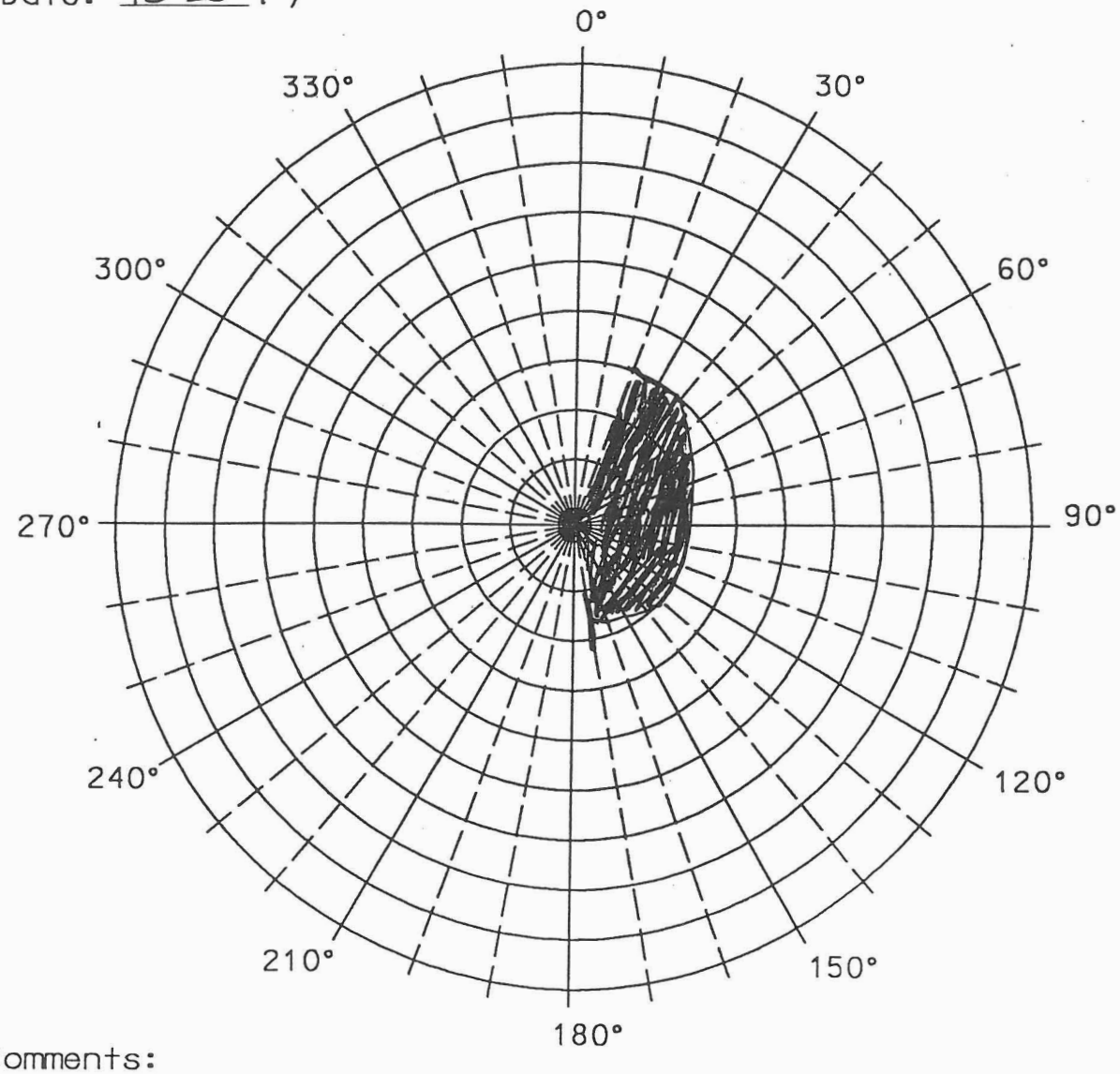

Comments:

TREES

STATION / PANEL VISIBILITY DIAGRAM

Station Name: _____

Panel Number: 215

USGS Quad: HIGLEY Latitude: 367715

Described By: _____ Longitude: 435380

Date: 10-23-97

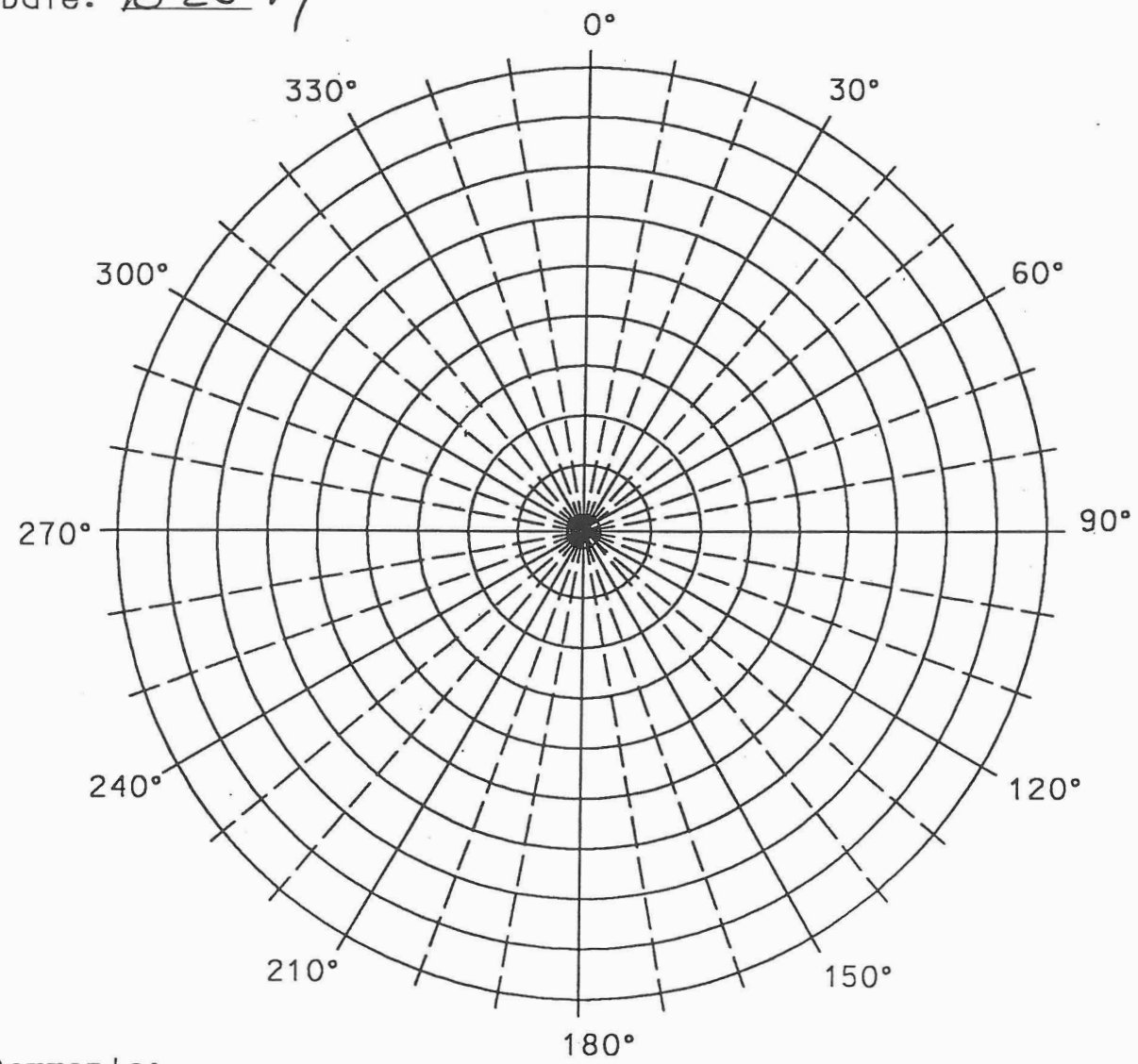

Comments: NO OBSTRUCTIONS

The NGS Data Sheet

```
DATABASE = Sybase ,PROGRAM = datasheet, VERSION = 5.03
       Retrieval Date = JANUARY  6, 1997      Version = 5.03
Starting Datasheet Retrieval...
1         National Geodetic Survey,   Retrieval Date = JANUARY  6, 1997
 DU0694 ***********************************************************************
 DU0694  DESIGNATION -  1394
 DU0694  PID         -  DU0694
 DU0694  STATE/COUNTY-  AZ/MARICOPA
 DU0694  USGS QUAD   -  HIGLEY (1982)
 DU0694
 DU0694                         *CURRENT SURVEY CONTROL
 DU0694
 DU0694* NAD 83(1986)-  33 20 08.     (N)    111 38 07.     (W)     SCALED
 DU0694* NAVD 88     -       425.65   (+/-2cm)    1396.5    (feet)  VERTCON
 DU0694
 DU0694  GEOID HEIGHT-         -29.54  (meters)                     GEOID96
 DU0694
 DU0694  VERT ORDER  -  FIRST     CLASS II (See Below)
 DU0694
 DU0694
 DU0694
 DU0694.The horizontal coordinates were scaled from a topographic map and have
 DU0694.an estimated accuracy of +/- 6 seconds.
 DU0694
 DU0694.The NAVD 88 height was computed by applying the VERTCON shift value to
 DU0694.the NGVD 29 height (displayed under SUPERSEDED SURVEY CONTROL.)
 DU0694.The vertical order pertains to the superseded datum.
 DU0694
 DU0694.The geoid height was determined by GEOID96.
 DU0694
 DU0694;                    North         East    Units  Estimated Accuracy
 DU0694;SPC AZ C     -    259,000.      239,550.      MT  (+/- 180 meters Scaled)
 DU0694
 DU0694                         SUPERSEDED SURVEY CONTROL
 DU0694
 DU0694  NGVD 29     -       425.132  (meters)    1394.79    (feet)  ADJ UNCH
 DU0694
 DU0694.Superseded values are not recommended for survey control.
 DU0694.NGS no longer adjusts projects to the NAD 27 or NGVD 29 datums.
 DU0694.See file format.dat to determine how the superseded data were derived.
 DU0694
 DU0694_MARKER: DD = SURVEY DISK
 DU0694_SETTING: 30 = SET IN A LIGHT STRUCTURE
 DU0694_STAMPING: 1394
 DU0694_STABILITY: D = MARK OF QUESTIONABLE OR UNKNOWN STABILITY
 DU0694
 DU0694  HISTORY     - Date     Condition        Recov. By
 DU0694  HISTORY     - UNK      MONUMENTED       AZHD
 DU0694  HISTORY     - 1967     GOOD             NGS
 DU0694  HISTORY     - 19920219 MARK NOT FOUND   NGS
 DU0694
 DU0694                         STATION DESCRIPTION
 DU0694
 DU0694'DESCRIBED BY NATIONAL GEODETIC SURVEY 1967
 DU0694'5.0 MI N FROM QUEEN CREEK.
 DU0694'ABOUT 5.0 MILES NORTH ALONG ELLSWORTH AVENUE FROM THE QUEEN CREEK
 DU0694'SCHOOL AT QUEEN CREEK, IN S 15, T 1 S, R 7 E, 0.5 MILE NORTH OF THE
 DU0694'GENERAL MOTORS DESERT PROVING GROUND BUILDING, 50 FEET NORTHEAST OF
 DU0694'THE CENTER OF THE INTERSECTION OF ELLSWORTH AVENUE AND WARNER ROAD, 16
 DU0694'FEET EAST OF THE CENTER LINE OF ELLSWORTH AVENUE, 46 FEET NORTH OF THE
 DU0694'EXTENDED CENTER LINE OF WARNER ROAD, SET IN THE CENTER OF THE TOP OF
```

```
DU0694'THE EAST HEAD WALL OF A CATTLE GUARD ACROSS ELLSWORTH AVENUE, AND
DU0694'ABOUT 1 FOOT ABOVE THE LEVEL OF THE AVENUE.
DU0694
DU0694                          STATION RECOVERY (1992)
DU0694
DU0694'RECOVERY NOTE BY NATIONAL GEODETIC SURVEY 1992
DU0694'MARK NOT FOUND.
1        National Geodetic Survey,   Retrieval Date = JANUARY  6, 1997
DU0695 ***********************************************************************
DU0695  CBN         -  This is a Cooperative Base Network Control Station.
DU0695  DESIGNATION -  D 282
DU0695  PID         -  DU0695
DU0695  STATE/COUNTY-  AZ/MARICOPA
DU0695  USGS QUAD   -  HIGLEY (1982)
DU0695
DU0695                         *CURRENT SURVEY CONTROL
DU0695
DU0695* NAD 83(1992)-  33 20 08.56456(N)    111 39 06.24720(W)     ADJUSTED
DU0695* NAVD 88     -      417.960  (meters)    1371.26   (feet)   ADJUSTED
DU0695
DU0695  X           -  -1,968,212.099 (meters)                     COMP
DU0695  Y           -  -4,958,051.786 (meters)                     COMP
DU0695  Z           -   3,485,338.701 (meters)                     COMP
DU0695  LAPLACE CORR-            3.08 (seconds)                    DEFLEC96
DU0695  ELLIP HEIGHT-          388.366 (meters)                    GPS OBS
DU0695  GEOID HEIGHT-          -29.58  (meters)                    GEOID96
DU0695  DYNAMIC HT  -          417.457 (meters)   1369.61   (feet) COMP
DU0695  MODELED GRAV-      979,422.3   (mgal)                      NAVD 88
DU0695
DU0695  HORZ ORDER  -  B
DU0695  VERT ORDER  -  FIRST     CLASS II
DU0695  ELLP ORDER  -  SECOND    CLASS I
DU0695
DU0695
DU0695
DU0695.The horizontal coordinates were established by GPS observations
DU0695.and adjusted by the National Geodetic Survey in September 1992.
DU0695
DU0695.The orthometric height was determined by differential leveling
DU0695.and adjusted by the National Geodetic Survey in November 1993.
DU0695
DU0695.The X, Y, and Z were computed from the position and the ellipsoidal ht.
DU0695
DU0695.The Laplace correction was computed from DEFLEC96 derived deflections.
DU0695
DU0695.The ellipsoidal height was determined by GPS observations
DU0695.and is referenced to NAD 83.
DU0695
DU0695.The geoid height was determined by GEOID96.
DU0695
DU0695.The dynamic height is computed by dividing the NAVD 88
DU0695.geopotential number by the normal gravity value computed on the
DU0695.Geodetic Reference System of 1980 (GRS 80) ellipsoid at 45
DU0695.degrees latitude (G = 980.6199 gals.).
DU0695
DU0695.The modeled gravity was interpolated from observed gravity values.
DU0695
DU0695;                    North          East      Units   Scale       Converg.
DU0695;SPC AZ C     -    259,012.156   238,022.064   MT  0.99990750 +0 08 44.1
DU0695;UTM  12      -  3,688,694.625   439,348.692   MT  0.99964535 -0 21 29.4
DU0695
DU0695                         SUPERSEDED SURVEY CONTROL
DU0695
DU0695  NAD 83(1986)-  33 20 08.55540(N)    111 39 06.25115(W)     ADJUSTED
```

```
DU0695  NGVD 29      -        417.791  (meters)    1370.70    (feet)  ADJ UNCH
DU0695
DU0695.Superseded values are not recommended for survey control.
DU0695.NGS no longer adjusts projects to the NAD 27 or NGVD 29 datums.
DU0695.See file format.dat to determine how the superseded data were derived.
DU0695
DU0695_MARKER: DB = BENCH MARK DISK
DU0695_SETTING: 7 = SET IN TOP OF CONCRETE MONUMENT (ROUND)
DU0695_STAMPING: D 282 1948
DU0695_STABILITY: C = MAY HOLD, BUT OF TYPE COMMONLY SUBJECT TO
DU0695+STABILITY: SURFACE MOTION
DU0695_SATELLITE: THE SITE LOCATION WAS REPORTED AS SUITABLE FOR
DU0695+SATELLITE: SATELLITE OBSERVATIONS - February 03, 1992
DU0695
DU0695  HISTORY     - Date     Condition        Recov. By
DU0695  HISTORY     - 1948     MONUMENTED       CGS
DU0695  HISTORY     - 1967     GOOD             NGS
DU0695  HISTORY     - 19840403 GOOD             -
DU0695  HISTORY     - 19920111 GOOD             NGS
DU0695  HISTORY     - 19920203 GOOD             NGS
DU0695
DU0695                          STATION DESCRIPTION
DU0695
DU0695'DESCRIBED BY NATIONAL GEODETIC SURVEY 1967
DU0695'5.95 MI N FROM QUEEN CREEK.
DU0695'ABOUT 5.0 MILES NORTH ALONG ELLSWORTH AVENUE FROM THE QUEEN CREEK
DU0695'SCHOOL AT QUEEN CREEK, THENCE 0.95 MILE WEST ALONG WARNER ROAD, IN S
DU0695'21, T 1 S, R 7 E, 0.35 MILE WEST OF A RANCH HOUSE, 0.35 MILE EAST OF A
DU0695'SET OF STOCK PENS, 33 FEET SOUTH OF THE CENTER LINE OF THE ROAD, 17
DU0695'FEET SOUTHWEST OF POWER POLE NUMBER 70, 6 1/2 FEET SOUTH OF A FENCE,
DU0695'1.0 FOOT WEST OF A METAL WITNESS POST, ABOUT 3 FEET ABOVE THE LEVEL OF
DU0695'THE ROAD, AND SET IN THE TOP OF A CONCRETE POST PROJECTING 8 INCHES.
DU0695
DU0695                          STATION RECOVERY (1984)
DU0695
DU0695'RECOVERED 1984
DU0695'RECOVERED IN GOOD CONDITION.
DU0695
DU0695                          STATION RECOVERY (1992)
DU0695
DU0695'RECOVERY NOTE BY NATIONAL GEODETIC SURVEY 1992
DU0695'9.8 KM (6.10 MI) NORTHERLY ALONG ELLSWORTH ROAD FROM THE POST OFFICE
DU0695'IN QUEEN CREEK, THENCE 1.5 KM (0.95 MI) WESTERLY ALONG WARNER ROAD,
DU0695'10.8 M (35.4 FT) SOUTH OF AND LEVEL WITH THE ROAD CENTERLINE, 4.7 M
DU0695'(15.4 FT) SOUTHWEST OF A UTILITY POLE, 2.1 M (6.9 FT) SOUTH OF A
DU0695'FENCE, 0.3 M (1.0 FT) WEST OF A WITNESS POST, AND THE MONUMENT
DU0695'PROJECTS 0.3 M (1.0 FT) ABOVE THE GROUND SURFACE.
DU0695
DU0695                          STATION RECOVERY (1992)
DU0695
DU0695'RECOVERY NOTE BY NATIONAL GEODETIC SURVEY 1992
DU0695'THE STATION IS LOCATED ABOUT 11.29 KM (7.02 MI)  NORTH OF QUEEN CREEK,
DU0695'8.06 KM (5.01 MI) NORTH-NORTHWEST OF QUEEN CREEK SCHOOL, 1.5 KM
DU0695'(0.9 MI) WEST OF THE JUNCTION OF ELLSWORTH ROAD AND WARNER ROAD, ON
DU0695'THE SOUTH SIDE OF WARNER ROAD, INSIDE A PASTURE FENCELINE, IN S 21,
DU0695'T1S, R7E.  OWNERSHIP-UNKNOWN.
DU0695'TO REACH THE STATION FROM THE U.S. POST OFFICE IN QUEEN CREEK, GO
DU0695'NORTH ON ELLSWORTH ROAD FOR 0.16 KM (0.10 MI) TO THE JUNCTION OF
DU0695'OCOTILLO ROAD.  CONTINUE NORTH ON ELLSWORTH ROAD FOR 0.8 KM (0.5 MI)
DU0695'TO THE JUNCTION OF RITTENHOUSE ROAD.  CONTINUE NORTH ON ELLSWORTH ROAD
DU0695'FOR 0.72 KM (0.45 MI) TO THE QUEEN CREEK SCHOOL ON THE RIGHT.
DU0695'CONTINUE NORTH ON ELLLSWORTH ROAD FOR 8.06 KM (5.01 MI) TO THE
DU0695'JUNCTION OF WARNER ROAD.  TURN LEFT, WEST, ON WARNER ROAD FOR 1.5 KM
DU0695'(0.9 MI) TO THE STATION ON THE LEFT NEAR THE FIRST POWERLINE POLE
```

```
DU0695'EAST OF A POWERLINE OVER THE ROAD.
DU0695'THE STATION IS SET IN A CONCRETE POST PROJECTING 15-CM.  LOCATED 10.4
DU0695'M (34.1 FT) SOUTH OF THE CENTERLINE OF THE ROAD, 5.18 M (16.99 FT)
DU0695'SOUTHWEST OF A POWERLINE POLE, 1.98 M (6.50 FT) SOUTH OF A FENCELINE,
DU0695'0.61 M (2.00 FT) ABOVE THE LEVEL OF THE ROAD AND 0.31 M (1.02 FT)
DU0695'WEST OF A METAL WITNESS POST.
1        National Geodetic Survey,   Retrieval Date = JANUARY  6, 1997
DU0689 ***********************************************************************
DU0689  DESIGNATION -  V 364
DU0689  PID         -  DU0689
DU0689  STATE/COUNTY-  AZ/MARICOPA
DU0689  USGS QUAD   -  HIGLEY (1982)
DU0689
DU0689                          *CURRENT SURVEY CONTROL
DU0689
DU0689* NAD 83(1986)-  33 18 23.      (N)    111 38 07.      (W)      SCALED
DU0689* NAVD 88     -       421.843  (meters)    1384.00    (feet)   ADJUSTED
DU0689
DU0689  GEOID HEIGHT-          -29.58  (meters)                       GEOID96
DU0689  DYNAMIC HT  -          421.333 (meters)    1382.32    (feet)   COMP
DU0689  MODELED GRAV-      979,415.3   (mgal)                         NAVD 88
DU0689
DU0689  VERT ORDER  -  FIRST     CLASS II
DU0689
DU0689
DU0689
DU0689.The horizontal coordinates were scaled from a topographic map and have
DU0689.an estimated accuracy of +/- 6 seconds.
DU0689
DU0689.The orthometric height was determined by differential leveling
DU0689.and adjusted by the National Geodetic Survey in November 1993.
DU0689
DU0689.The geoid height was determined by GEOID96.
DU0689
DU0689.The dynamic height is computed by dividing the NAVD 88
DU0689.geopotential number by the normal gravity value computed on the
DU0689.Geodetic Reference System of 1980 (GRS 80) ellipsoid at 45
DU0689.degrees latitude (G = 980.6199 gals.).
DU0689
DU0689.The modeled gravity was interpolated from observed gravity values.
DU0689
DU0689;                    North         East     Units  Estimated Accuracy
DU0689;SPC AZ C     -    255,760.      239,560.      MT  (+/- 180 meters Scaled)
DU0689
DU0689                          SUPERSEDED SURVEY CONTROL
DU0689
DU0689  NGVD 29     -       421.626  (meters)    1383.28    (feet)   ADJ UNCH
DU0689
DU0689.Superseded values are not recommended for survey control.
DU0689.NGS no longer adjusts projects to the NAD 27 or NGVD 29 datums.
DU0689.See file format.dat to determine how the superseded data were derived.
DU0689
DU0689_MARKER: DB = BENCH MARK DISK
DU0689_SETTING: 7 = SET IN TOP OF CONCRETE MONUMENT (ROUND)
DU0689_STAMPING: V 364 1967
DU0689_STABILITY: C = MAY HOLD, BUT OF TYPE COMMONLY SUBJECT TO
DU0689+STABILITY: SURFACE MOTION
DU0689_SATELLITE: THE SITE LOCATION WAS REPORTED AS SUITABLE FOR
DU0689+SATELLITE: SATELLITE OBSERVATIONS - January 11, 1992
DU0689
DU0689  HISTORY     - Date     Condition        Recov. By
DU0689  HISTORY     - 1967     MONUMENTED       CGS
DU0689  HISTORY     - 1979     GOOD             LOCSUR
DU0689  HISTORY     - 19920111 GOOD             NGS
```

```
89
89                          STATION DESCRIPTION
89
89'DESCRIBED BY COAST AND GEODETIC SURVEY 1967
89'3.0 MI N FROM QUEEN CREEK.
89'ABOUT 3.0 MILES NORTH ALONG ELLSWORTH AVENUE FROM THE QUEEN CREEK
89'SCHOOL AT QUEEN CREEK, IN S 27, T 1 S, R 7 E, 49 FEET EAST OF THE
89'CENTER LINE OF THE ROAD, 73 FEET EAST AND ACROSS THE ROAD FROM THE
89'NORTH END OF A SPILLWAY CURB, 34 FEET NORTH OF THE CENTER OF A WIRE
89'GATE, 2 FEET WEST OF A FENCE, 1.3 FEET NORTH OF A METAL WITNESS POST,
89'ABOUT 1 FOOT ABOVE THE LEVEL OF THE ROAD, AND SET IN THE TOP OF A
89'CONCRETE POST PROJECTING 6 INCHES.
89
89                          STATION RECOVERY (1979)
89
89'RECOVERY NOTE BY LOCAL SURVEYOR (INDIVIDUAL OR FIRM) 1979
89'RECOVERED IN GOOD CONDITION.
89
89                          STATION RECOVERY (1992)
89
89'RECOVERY NOTE BY NATIONAL GEODETIC SURVEY 1992
89'6.6 KM (4.10 MI) NORTHERLY ALONG ELLSWORTH ROAD FROM THE POST OFFICE
89'IN QUEEN CREEK, 29.0 M (95.1 FT) NORTH OF THE CENTER OF A GATE, 13.4
89'M (44.0 FT) EAST OF THE CENTER OF THE ROAD, 0.4 M (1.3 FT) NORTH OF A
89'WITNESS POST, 0.4 M (1.3 FT) WEST OF A FENCE, 0.2 M (0.7 FT) BELOW
89'THE LEVEL OF THE ROAD, AND THE MONUMENT IS FLUSH WITH THE GROUND
89'SURFACE.
    National Geodetic Survey,   Retrieval Date = JANUARY  6, 1997
93 ***********************************************************************
93  DESIGNATION -  W 364 RESET
93  PID         -  DU0693
93  STATE/COUNTY-  AZ/MARICOPA
93  USGS QUAD   -  HIGLEY (1982)
93
93                        *CURRENT SURVEY CONTROL
93
93* NAD 83(1986)-  33 19 15.      (N)    111 38 07.      (W)     SCALED
93* NAVD 88     -       423.581   (meters)    1389.70    (feet)  ADJUSTED
93
93  GEOID HEIGHT-         -29.56  (meters)                       GEOID96
93  DYNAMIC HT  -         423.071 (meters)    1388.03    (feet)  COMP
93  MODELED GRAV-     979,422.1   (mgal)                         NAVD 88
93
93  VERT ORDER  -  FIRST     CLASS II
93
93
93
93.The horizontal coordinates were scaled from a topographic map and have
93.an estimated accuracy of +/- 6 seconds.
93
93.The orthometric height was determined by differential leveling
93.and adjusted by the National Geodetic Survey in November 1993.
93
93.The geoid height was determined by GEOID96.
93
93.The dynamic height is computed by dividing the NAVD 88
93.geopotential number by the normal gravity value computed on the
93.Geodetic Reference System of 1980 (GRS 80) ellipsoid at 45
93.degrees latitude (G = 980.6199 gals.).
93
93.The modeled gravity was interpolated from observed gravity values.
93
93;                    North         East     Units  Estimated Accuracy
93;SPC AZ C     -    257,370.      239,560.     MT  (+/- 180 meters Scaled)
```

```
DU0693
DU0693                          SUPERSEDED SURVEY CONTROL
DU0693
DU0693  NGVD 29      -       423.42    (meters)     1389.2     (feet)  RESET
DU0693
DU0693.Superseded values are not recommended for survey control.
DU0693.NGS no longer adjusts projects to the NAD 27 or NGVD 29 datums.
DU0693.See file format.dat to determine how the superseded data were derived.
DU0693
DU0693_MARKER: DB = BENCH MARK DISK
DU0693_SETTING: 7 = SET IN TOP OF CONCRETE MONUMENT (ROUND)
DU0693_STAMPING: W 364 RESET 1967
DU0693_STABILITY: C = MAY HOLD, BUT OF TYPE COMMONLY SUBJECT TO
DU0693+STABILITY: SURFACE MOTION
DU0693_SATELLITE: THE SITE LOCATION WAS REPORTED AS NOT SUITABLE FOR
DU0693+SATELLITE: SATELLITE OBSERVATIONS - January 11, 1992
DU0693
DU0693  HISTORY     - Date     Condition        Recov. By
DU0693  HISTORY     - 1967     MONUMENTED       USDA
DU0693  HISTORY     - 1979     GOOD             LOCSUR
DU0693  HISTORY     - 19920111 GOOD             NGS
DU0693
DU0693                           STATION DESCRIPTION
DU0693
DU0693'DESCRIBED BY US DEPARTMENT OF AGRICULTURE 1967
DU0693'4.0 MI N FROM QUEEN CREEK.
DU0693'ABOUT 4 MILES NORTH ALONG ELLSWORTH AVENUE FROM THE QUEEN CREEK SCHOOL
DU0693'AT QUEEN CREEK, ABOUT 50 FEET EAST AND 105 FEET NORTH OF SECTION
DU0693'CORNER COMMON TO SECTIONS 21, 22, 27 AND 28, T 1 S R 7 E G AND SR B
DU0693'AND M, ON THE OUTSIDE AND NEAR THE SOUTHWEST CORNER OF PROPERTY LINE
DU0693'FENCE OF GENERAL MOTORS PROVING GROUND, IN THE NORTHEAST ANGLE OF THE
DU0693'INTERSECTION FORMED BY ELLSWORTH AVENUE AND POWER LINE FLOODWAY,
DU0693'LOCATED JUST NORTH OF A CONCRETE FLOOD WAY PRESENTLY UNDER
DU0693'CONSTRUCTION, 50 FEET EAST OF THE CENTER LINE OF ELLSWORTH AVENUE, 1.5
DU0693'FEET WEST OF THE FENCE LINE, AND SET IN THE TOP OF A CONCRETE POST.
DU0693
DU0693                           STATION RECOVERY (1979)
DU0693
DU0693'RECOVERY NOTE BY LOCAL SURVEYOR (INDIVIDUAL OR FIRM) 1979
DU0693'RECOVERED IN GOOD CONDITION.
DU0693
DU0693                           STATION RECOVERY (1992)
DU0693
DU0693'RECOVERY NOTE BY NATIONAL GEODETIC SURVEY 1992
DU0693'8.2 KM (5.10 MI) NORTHERLY ALONG ELLSWORTH ROAD FROM THE POST OFFICE
DU0693'IN QUEEN CREEK, 14.8 M (48.6 FT) EAST OF AND LEVEL WITH THE ROAD
DU0693'CENTERLINE, 13.9 M (45.6 FT) SOUTH OF A T-FENCE CORNER, 13.0 M (42.7
DU0693'FT) NORTH OF THE NORTH BANK OF A CANAL, 0.5 M (1.6 FT) SOUTH OF A
DU0693'WITNESS POST, AND 0.3 M (1.0 FT) WEST OF A FENCE.
1        National Geodetic Survey,   Retrieval Date = JANUARY  6, 1997
DU2103 ***********************************************************************
DU2103  DESIGNATION -  BILLY
DU2103  PID         -  DU2103
DU2103  STATE/COUNTY-  AZ/MARICOPA
DU2103  USGS QUAD   -  HIGLEY (1982)
DU2103
DU2103                          *CURRENT SURVEY CONTROL
DU2103
DU2103* NAD 83(1992)-  33 19 10.68721(N)     111 38 07.32166(W)      ADJUSTED
DU2103* NAVD 88     -       422.57    (+/-2cm)     1386.4     (feet)  VERTCON
DU2103
DU2103  X           -  -1,967,158.428 (meters)                       COMP
DU2103  Y           -  -4,959,528.592 (meters)                       COMP
DU2103  Z           -   3,483,851.582 (meters)                       COMP
```

```
DU2103  LAPLACE CORR-          3.22  (seconds)                DEFLEC96
DU2103  ELLIP HEIGHT-        393.526 (meters)                 GPS OBS
DU2103  GEOID HEIGHT-        -29.56  (meters)                 GEOID96
DU2103
DU2103  HORZ ORDER  -  SECOND
DU2103  VERT ORDER  -  THIRD ? (See Below)
DU2103  ELLP ORDER  -  FOURTH    CLASS II
DU2103
DU2103
DU2103
DU2103.The horizontal coordinates were established by classical geodetic methods
DU2103.and adjusted by the National Geodetic Survey in August 1993.
DU2103
DU2103.The NAVD 88 height was computed by applying the VERTCON shift value to
DU2103.the NGVD 29 height (displayed under SUPERSEDED SURVEY CONTROL.)
DU2103.The vertical order pertains to the superseded datum.
DU2103
DU2103.The X, Y, and Z were computed from the position and the ellipsoidal ht.
DU2103
DU2103.The Laplace correction was computed from DEFLEC96 derived deflections.
DU2103
DU2103.The ellipsoidal height was determined by GPS observations
DU2103.and is referenced to NAD 83.
DU2103
DU2103.The geoid height was determined by GEOID96.
DU2103
DU2103;                     North         East     Units   Scale       Converg.
DU2103;SPC AZ C    -    257,233.208   239,550.571   MT  0.99990845 +0 09 16.3
DU2103;UTM  12     -  3,686,902.782   440,861.103   MT  0.99964312 -0 20 56.5
DU2103
DU2103:                Primary Azimuth Mark                      Grid Az
DU2103:SPC AZ C    -   DOUBLE 2                                  350 50 57.3
DU2103:UTM  12     -   DOUBLE 2                                  351 21 10.1
DU2103
DU2103|-----------------------------------------------------------------------|
DU2103| PID    Reference Object                     Distance       Geod. Az   |
DU2103|                                                            dddmmss.s |
DU2103|        BILLY RM 1                           12.421 METERS 00116      |
DU2103|        BILLY RM 2                           12.503 METERS 17617      |
DU2103| DU2109 DOUBLE 2                            APPROX.10.8 KM 3510013.6 |
DU2103|-----------------------------------------------------------------------|
DU2103
DU2103                          SUPERSEDED SURVEY CONTROL
DU2103
DU2103  NAD 83(1986)-  33 19 10.68203(N)    111 38 07.32540(W)     ADJUSTED
DU2103  NAD 27      -  33 19 10.50096(N)    111 38 04.84568(W)     ADJUSTED
DU2103  NGVD 29     -       422.06   (meters)    1384.7    (feet)  LEVELING
DU2103
DU2103.Superseded values are not recommended for survey control.
DU2103.NGS no longer adjusts projects to the NAD 27 or NGVD 29 datums.
DU2103.See file format.dat to determine how the superseded data were derived.
DU2103
DU2103_STABILITY: C = MAY HOLD, BUT OF TYPE COMMONLY SUBJECT TO
DU2103+STABILITY: SURFACE MOTION
DU2103_SATELLITE: THE SITE LOCATION WAS REPORTED AS SUITABLE FOR
DU2103+SATELLITE: SATELLITE OBSERVATIONS - 1986
DU2103
DU2103  HISTORY     - Date     Condition        Recov. By
DU2103  HISTORY     - 1975     MONUMENTED       AZDT
DU2103  HISTORY     - 1976     GOOD             AZDT
DU2103  HISTORY     - 1979     GOOD             NGS
DU2103  HISTORY     - 1986     GOOD             AZDT
DU2103
DU2103                          STATION DESCRIPTION
```

, 1997
****

	ADJUSTED
t)	VERTCON
	COMP
	COMP
	COMP
	DEFLEC96
	GPS OBS
	GEOID96

geodetic methods
93.

hift value to
TROL.)

llipsoidal ht.

deflections.

Converg.
2 +0 09 15.8
5 -0 20 58.3

rid Az
47 27 51.3
47 58 05.4

Geod. Az
dddmmss.s
17950
3473707.1
35930

ADJUSTED
ADJUSTED
VERT ANG

ums.
erived.

A DEPARTMENT OF TRANSPORTATION 1976 (TT)
T 4.9 MILES NORTH OF QUEEN CREEK AND 13
MESA ALONG THE EAST SIDE OF ELLSWORTH ROAD
G GROUNDS.

DOT HIGHWAY DIVISION DISK STAMPED BILLY
A 10 INCH DIAMETER CONCRETE MONUMENT. THE
UTH OF CONCRETE LINED FLOOD CONTROL DITCH
THWEST CORNER OF THE G.M.C. PROVING GROUND
5.7 FEET EAST OF CENTERLINE OF ELLSWORTH RD.,
T-OF-WAY FENCE AND IS MARKED BY A WITNESS
EET EAST.

A ADOT HIGHWAY DIVISION DISK STAMPED RM 1
ET IN A 10 INCH DIAMETER CONCRETE
IS 48 FEET EAST OF THE CENTERLINE OF
2-1/2 FEET WEST OF RIGHT-OF-WAY FENCE.

A ADOT HIGHWAY DIVISION DISK STAMPED RM 2
ET IN A 10 INCH DIAMETER CONCRETE
IS 48 FEET EAST OF CENTERLINE OF ELLSWORTH
T OF RIGHT-OF-WAY FENCE.

N FROM QUEEN CREEK, GO NORTH ON ELLSWORTH
TO STATION ON THE RIGHT (EAST) JUST SOUTH OF
THE SOUTHWEST CORNER OF THE GMC PROVING

VE STATION MARK 1.5 METERS.

STATION RECOVERY (1979)

TIONAL GEODETIC SURVEY 1979 (JVD)
H REFERENCE MARKS WERE RECOVERED IN GOOD
ALLY DESCRIBED.

D DIRECTION FROM NEAREST TOWN
HEAST OF WILLIAMS AIR FORCE BASE.

STATION RECOVERY (1986)

RIZONA DEPARTMENT OF TRANSPORTATION 1986 (JRT)
COVERED AT THIS DATE.
UND IN GOOD CONDITION. PREVIOUS TO REACH
EQUATE.
Survey, Retrieval Date = JANUARY 6, 1997
****
S R7E SEC 15 NW COR
2104
/MARICOPA
GLEY (1982)

*CURRENT SURVEY CONTROL

21 00.56502	(N)	111 38 08.61188	(W)	ADJUSTED
427.8	(meters)	1404.	(feet)	VERTCON
3.35	(seconds)			DEFLEC96
-29.52	(meters)			GEOID96

COND

```
DU2104
DU2104.The horizontal coordinates were established by classical geodetic methods
DU2104.and adjusted by the National Geodetic Survey in August 1993.
DU2104
DU2104.The NAVD 88 height was computed by applying the VERTCON shift value to
DU2104.the NGVD 29 height (displayed under SUPERSEDED SURVEY CONTROL.)
DU2104
DU2104.The Laplace correction was computed from DEFLEC96 derived deflections.
DU2104
DU2104.The geoid height was determined by GEOID96.
DU2104
DU2104;                    North         East     Units   Scale       Converg.
DU2104;SPC AZ C     -    260,617.961   239,508.081   MT  0.99990843 +0 09 16.0
DU2104;UTM  12      -  3,690,286.880   440,848.377   MT  0.99964314 -0 20 58.2
DU2104
DU2104|-----------------------------------------------------------------------|
DU2104| PID    Reference Object                      Distance       Geod. Az  |
DU2104|                                                             dddmmss.s |
DU2104| DU2106 JIMMY                                211.552 METERS 18218     |
DU2104| DU2107 JIMMY RM 1                           198.775 METERS 18229     |
DU2104|-----------------------------------------------------------------------|
DU2104
DU2104                          SUPERSEDED SURVEY CONTROL
DU2104
DU2104  NAD 83(1986)-  33 21 00.55994(N)    111 38 08.61557(W)     ADJUSTED
DU2104  NAD 27      -  33 21 00.38243(N)    111 38 06.13446(W)     ADJUSTED
DU2104  NGVD 29     -       427.3    (meters)    1402.     (feet)  VERT ANG
DU2104
DU2104.Superseded values are not recommended for survey control.
DU2104.NGS no longer adjusts projects to the NAD 27 or NGVD 29 datums.
DU2104.See file format.dat to determine how the superseded data were derived.
DU2104
DU2104_MARKER: DD = SURVEY DISK
DU2104_SETTING: 0 = UNSPECIFIED SETTING
DU2104_STABILITY: D = MARK OF QUESTIONABLE OR UNKNOWN STABILITY
DU2104
DU2104  HISTORY     - Date     Condition        Recov. By
DU2104  HISTORY     - 1976     MONUMENTED       USGLO
DU2104  HISTORY     - 1979     GOOD             NGS
DU2104
DU2104                          STATION DESCRIPTION
DU2104
DU2104'DESCRIBED BY US GOVERNMENT LAND OFFICE 1976 (TT)
DU2104'THE STATION IS LOCATED ABOUT 7 MILES NORTH OF QUEEN CREEK AT
DU2104'THE INTERSECTION OF ELLSWORTH RD AND ELLIOT RD. IN T1S, R7E.
DU2104'
DU2104'THE STATION IS A 3 INCH MARICOPA HWY. DEPARTMENT BRASS CAP WITH
DU2104'A PUNCH MARK IN CENTER OF DISK.  THE DISK IS SET IN CONCRETE IN A
DU2104'CAST IRON HANDHOLE 10 INCH BELOW THE SURFACE OF ROADWAY.
DU2104'
DU2104'TO REACH THE STATION FROM QUEEN CREEK, TRAVEL NORTH ON ELLSWORTH
DU2104'RD. FOR 7 MILES TO THE INTERSECTION OF ELLIOT RD. AND THE STATION
DU2104'IN A HANDHOLE AT THE INTERSECTION OF THE ROADWAYS.
DU2104'
DU2104'HEIGHT OF LIGHT ABOVE STATION MARK 1.5 METERS.
DU2104
DU2104                          STATION RECOVERY (1979)
DU2104
DU2104'RECOVERY NOTE BY NATIONAL GEODETIC SURVEY 1979 (JVD)
DU2104'THE STATION WAS RECOVERED IN GOOD CONDITION AS ORIGINALLY
DU2104'DESCRIBED.
DU2104'
DU2104'AIRLINE DISTANCE AND DIRECTION FROM NEAREST TOWN
DU2104'3.5 MILES NORTHEAST OF WILLIAMS AIR FORCE BASE.
```

```
1        National Geodetic Survey,   Retrieval Date = JANUARY  6, 1997
DU2106 ***********************************************************************
DU2106  DESIGNATION -  JIMMY
DU2106  PID         -  DU2106
DU2106  STATE/COUNTY-  AZ/MARICOPA
DU2106  USGS QUAD   -  HIGLEY (1982)
DU2106
DU2106                          *CURRENT SURVEY CONTROL
DU2106
DU2106* NAD 83(1992)-  33 20 53.70387(N)    111 38 08.93964(W)     ADJUSTED
DU2106* NAVD 88     -       427.8    (meters)    1404.     (feet)  VERTCON
DU2106
DU2106  X           -  -1,966,555.827 (meters)                     COMP
DU2106  Y           -  -4,957,895.861 (meters)                     COMP
DU2106  Z           -   3,486,506.199 (meters)                     COMP
DU2106  LAPLACE CORR-            3.36  (seconds)                   DEFLEC96
DU2106  ELLIP HEIGHT-          398.646 (meters)                    GPS OBS
DU2106  GEOID HEIGHT-          -29.52  (meters)                    GEOID96
DU2106
DU2106  HORZ ORDER  -  SECOND
DU2106  ELLP ORDER  -  FOURTH    CLASS II
DU2106
DU2106
DU2106
DU2106.The horizontal coordinates were established by classical geodetic methods
DU2106.and adjusted by the National Geodetic Survey in August 1993.
DU2106
DU2106.The NAVD 88 height was computed by applying the VERTCON shift value to
DU2106.the NGVD 29 height (displayed under SUPERSEDED SURVEY CONTROL.)
DU2106
DU2106.The X, Y, and Z were computed from the position and the ellipsoidal ht.
DU2106
DU2106.The Laplace correction was computed from DEFLEC96 derived deflections.
DU2106
DU2106.The ellipsoidal height was determined by GPS observations
DU2106.and is referenced to NAD 83.
DU2106
DU2106.The geoid height was determined by GEOID96.
DU2106
DU2106;                    North         East     Units   Scale       Converg.
DU2106;SPC AZ C     -    260,406.576   239,500.177   MT  0.99990842 +0 09 15.8
DU2106;UTM  12      -  3,690,075.629   440,838.616   MT  0.99964315 -0 20 58.3
DU2106
DU2106:                Primary Azimuth Mark                      Grid Az
DU2106:SPC AZ C     -  DOUBLE 2                                  347 27 51.3
DU2106:UTM  12      -  DOUBLE 2                                  347 58 05.4
DU2106
DU2106|-----------------------------------------------------------------------|
DU2106| PID    Reference Object                     Distance       Geod. Az  |
DU2106|                                                            dddmmss.s |
DU2106|        JIMMY RM 2                          12.706 METERS 17950      |
DU2106| DU2109 DOUBLE 2                           APPROX. 7.7 KM 3473707.1 |
DU2106| DU2107 JIMMY RM 1                          12.793 METERS 35930      |
DU2106|-----------------------------------------------------------------------|
DU2106
DU2106                          SUPERSEDED SURVEY CONTROL
DU2106
DU2106  NAD 83(1986)-  33 20 53.69876(N)    111 38 08.94334(W)     ADJUSTED
DU2106  NAD 27      -  33 20 53.52108(N)    111 38 06.46230(W)     ADJUSTED
DU2106  NGVD 29     -       427.3    (meters)    1402.     (feet)  VERT ANG
DU2106
DU2106.Superseded values are not recommended for survey control.
DU2106.NGS no longer adjusts projects to the NAD 27 or NGVD 29 datums.
DU2106.See file format.dat to determine how the superseded data were derived.
```

```
DU2106
DU2106_STABILITY: C = MAY HOLD, BUT OF TYPE COMMONLY SUBJECT TO
DU2106+STABILITY: SURFACE MOTION
DU2106_SATELLITE: THE SITE LOCATION WAS REPORTED AS SUITABLE FOR
DU2106+SATELLITE: SATELLITE OBSERVATIONS - 1986
DU2106
DU2106  HISTORY     - Date     Condition        Recov. By
DU2106  HISTORY     - 1975     MONUMENTED       AZDT
DU2106  HISTORY     - 1976     GOOD             AZDT
DU2106  HISTORY     - 1979     MARK NOT FOUND   NGS
DU2106  HISTORY     - 1986     GOOD             AZDT
DU2106
DU2106                          STATION DESCRIPTION
DU2106
DU2106'DESCRIBED BY ARIZONA DEPARTMENT OF TRANSPORTATION 1976 (TT)
DU2106'THE STATION IS ABOUT 6.9 MILES NORTH OF QUEEN CREEK AND 12.2
DU2106'MILES SOUTHEAST OF MESA ALONG THE WEST SIDE OF ELLSWORTH ROAD.
DU2106'
DU2106'THE STATION IS AN ADOT HIGHWAY DIVISION DISK STAMPED JIMMY 1975
DU2106'AND IS SET IN A 10 INCH DIAMETER CONCRETE MONUMENT.  THE STATION
DU2106'IS 34 FEET WEST OF THE CENTERLINE OF ELLSWORTH ROAD, 693 FEET
DU2106'SOUTH OF CENTERLINE OF ELLIOT ROAD AND IS MARKED BY A WITNESS POST
DU2106'AND SIGN 3 FEET TO NORTHWEST.
DU2106'
DU2106'REFERENCE MARK 1 IS A ADOT HIGHWAY DIVISION DISK STAMPED RM 1
DU2106'JIMMY 1975 AND IS SET IN A 10 INCH DIAMETER CONCRETE MONUMENT,
DU2106'34 FEET WEST OF CENTERLINE OF ELLSWORTH ROAD.
DU2106'
DU2106'REFERENCE MARK 2 IS A ADOT HIGHWAY DIVISION DISK STAMPED RM 2
DU2106'JIMMY 1975 SET IN A 10 INCH DIAMETER CONCRETE MONUMENT AND IS
DU2106'34 FEET WEST OF CENTERLINE OF ELLSWORTH ROAD.
DU2106'
DU2106'TO REACH THE STATION FROM THE JUNCTION OF STATE HIGHWAY 87 AND
DU2106'93 AND U.S. HIGHWAY 60, 70, 80 AND 89 IN MESA, GO EAST ON
DU2106'U.S. HWY. 60, 70, 80 AND 89 FOR 12 MILES TO ELLSWORTH ROAD, GO
DU2106'SOUTH ON ELLSWORTH ROAD FOR 4.5 MILES TO ELLIOT ROAD.  THE
DU2106'STATION IS ON THE RIGHT (WEST) OF ELLSWORTH ROAD JUST SOUTH OF
DU2106'ELLIOT ROAD.
DU2106'
DU2106'HEIGHT OF LIGHT ABOVE STATION MARK 1.5 METERS.
DU2106
DU2106                          STATION RECOVERY (1979)
DU2106
DU2106'RECOVERY NOTE BY NATIONAL GEODETIC SURVEY 1979 (JVD)
DU2106'NOT RECOVERED.  BOTH REFERENCE MARKS WERE FOUND OUT OF
DU2106'GROUND.  THE AREA APPEARS TO HAVE GRADED.
DU2106'
DU2106'AIRLINE DISTANCE AND DIRECTION FROM NEAREST TOWN
DU2106'2.5 MILES NORTHEAST OF WILLIAMS AIR FORCE BASE.
DU2106
DU2106                          STATION RECOVERY (1986)
DU2106
DU2106'RECOVERY NOTE BY ARIZONA DEPARTMENT OF TRANSPORTATION 1986 (JRT)
DU2106'THE STATION WAS RECOVERED AT THIS DATE.
DU2106'THE STATION WAS FOUND IN GOOD CONDITION.  PREVIOUS TO REACH
DU2106'DESCRIPTION WAS ADEQUATE.
1        National Geodetic Survey,   Retrieval Date = JANUARY  6, 1997
DU2298 ***********************************************************************
DU2298  DESIGNATION -  1390.54
DU2298  PID         -  DU2298
DU2298  STATE/COUNTY-  AZ/MARICOPA
DU2298  USGS QUAD   -  HIGLEY (1982)
DU2298
DU2298                         *CURRENT SURVEY CONTROL
```

```
DU2298
DU2298* NAD 83(1986)-  33 19 15.      (N)     111 38 06.      (W)      SCALED
DU2298* NAVD 88      -       424.030  (meters)     1391.17    (feet)  ADJUSTED
DU2298                                             1390.54  STAMPED
DU2298  GEOID HEIGHT-         -29.56  (meters)                        GEOID96
DU2298  DYNAMIC HT  -         423.520 (meters)    1389.50    (feet)  COMP
DU2298  MODELED GRAV-     979,422.0   (mgal)                         NAVD 88
DU2298
DU2298  VERT ORDER  -  FIRST     CLASS II
DU2298
DU2298
DU2298
DU2298.The horizontal coordinates were scaled from a topographic map and have
DU2298.an estimated accuracy of +/- 6 seconds.
DU2298
DU2298.The orthometric height was determined by differential leveling
DU2298.and adjusted by the National Geodetic Survey in November 1993.
DU2298
DU2298.The geoid height was determined by GEOID96.
DU2298
DU2298.The dynamic height is computed by dividing the NAVD 88
DU2298.geopotential number by the normal gravity value computed on the
DU2298.Geodetic Reference System of 1980 (GRS 80) ellipsoid at 45
DU2298.degrees latitude (G = 980.6199 gals.).
DU2298
DU2298.The modeled gravity was interpolated from observed gravity values.
DU2298
DU2298;                    North         East    Units  Estimated Accuracy
DU2298;SPC AZ C     -    257,370.      239,580.     MT  (+/- 180 meters Scaled)
DU2298
DU2298                          SUPERSEDED SURVEY CONTROL
DU2298
DU2298.No superseded survey control is available for this station.
DU2298
DU2298_MARKER: DD = SURVEY DISK
DU2298_SETTING: 32 = SET IN A RETAINING WALL OR CONCRETE LEDGE
DU2298_STAMPING: 1390.54
DU2298_STABILITY: C = MAY HOLD, BUT OF TYPE COMMONLY SUBJECT TO
DU2298+STABILITY: SURFACE MOTION
DU2298_SATELLITE: THE SITE LOCATION WAS REPORTED AS SUITABLE FOR
DU2298+SATELLITE: SATELLITE OBSERVATIONS - January 11, 1992
DU2298
DU2298  HISTORY      - Date     Condition        Recov. By
DU2298  HISTORY      - UNK      MONUMENTED       USDA
DU2298  HISTORY      - 19920111 GOOD             NGS
DU2298
DU2298                          STATION DESCRIPTION
DU2298
DU2298'DESCRIBED BY NATIONAL GEODETIC SURVEY 1992
DU2298'8.2 KM (5.10 MI) NORTHERLY ALONG ELLSWORTH ROAD FROM THE POST OFFICE
DU2298'IN QUEEN CREEK, NEAR THE CENTER OF THE EAST CONCRETE HEADWALL OF A
DU2298'CANAL UNDERPASS OF THE ROAD, AND 11.0 M (36.1 FT) EAST OF AND LEVEL
DU2298'WITH THE CENTERLINE OF THE ROAD.
1        National Geodetic Survey,   Retrieval Date = JANUARY  6, 1997
DU2299 ***********************************************************************
DU2299  DESIGNATION -  G 517
DU2299  PID         -  DU2299
DU2299  STATE/COUNTY-  AZ/MARICOPA
DU2299  USGS QUAD   -  HIGLEY (1982)
DU2299
DU2299                          *CURRENT SURVEY CONTROL
DU2299
DU2299* NAD 83(1986)-  33 20 08.      (N)     111 38 07.      (W)      SCALED
DU2299* NAVD 88      -       424.971  (meters)     1394.26    (feet)  ADJUSTED
```

```
DU2299
DU2299  GEOID HEIGHT-          -29.54  (meters)                          GEOID96
DU2299  DYNAMIC HT  -          424.460 (meters)   1392.58    (feet)     COMP
DU2299  MODELED GRAV-      979,423.0   (mgal)                            NAVD 88
DU2299
DU2299  VERT ORDER  -  FIRST     CLASS II
DU2299
DU2299
DU2299
DU2299.The horizontal coordinates were scaled from a topographic map and have
DU2299.an estimated accuracy of +/- 6 seconds.
DU2299
DU2299.The orthometric height was determined by differential leveling
DU2299.and adjusted by the National Geodetic Survey in November 1993.
DU2299
DU2299.The geoid height was determined by GEOID96.
DU2299
DU2299.The dynamic height is computed by dividing the NAVD 88
DU2299.geopotential number by the normal gravity value computed on the
DU2299.Geodetic Reference System of 1980 (GRS 80) ellipsoid at 45
DU2299.degrees latitude (G = 980.6199 gals.).
DU2299
DU2299.The modeled gravity was interpolated from observed gravity values.
DU2299
DU2299;                    North         East     Units  Estimated Accuracy
DU2299;SPC AZ C    -    259,000.      239,550.      MT  (+/- 180 meters Scaled)
DU2299
DU2299                          SUPERSEDED SURVEY CONTROL
DU2299
DU2299.No superseded survey control is available for this station.
DU2299
DU2299_MARKER: I = METAL ROD
DU2299_SETTING: 59 = STAINLESS STEEL ROD IN SLEEVE (10 FT.+)
DU2299_STAMPING: G 517 1992
DU2299_PROJECTION: FLUSH
DU2299_STABILITY: A = MOST RELIABLE AND EXPECTED TO HOLD
DU2299+STABILITY: POSITION/ELEVATION WELL
DU2299_SATELLITE: THE SITE LOCATION WAS REPORTED AS SUITABLE FOR
DU2299+SATELLITE: SATELLITE OBSERVATIONS - 1992
DU2299_ROD/PIPE-DEPTH: 6.0  meters
DU2299_SLEEVE-DEPTH  : 0.9 meters
DU2299
DU2299  HISTORY     - Date     Condition        Recov. By
DU2299  HISTORY     - 1992     MONUMENTED       NGS
DU2299
DU2299                          STATION DESCRIPTION
DU2299
DU2299'DESCRIBED BY NATIONAL GEODETIC SURVEY 1992
DU2299'9.8 KM (6.10 MI) NORTHERLY ALONG ELLSWORTH ROAD FROM THE POST OFFICE
DU2299'IN QUEEN CREEK, 15.4 M (50.5 FT) EAST OF AND LEVEL WITH THE ROAD
DU2299'CENTERLINE, 0.4 M (1.3 FT) WEST OF A WITNESS POST AND CHAIN-LINK
DU2299'FENCE, AND ON THE EXTENDED CENTERLINE OF WARNER ROAD.  NOTE--ACCESS
DU2299'TO THE DATUM POINT IS THROUGH A 5-INCH LOGO CAP.
Elapsed Time = 00:00:14
```

```
DESCRIBED BY COAST AND GEODETIC SURVEY 1967
2.0 MI N FROM QUEEN CREEK.
'ABOUT 2.0 MILES NORTH ALONG ELLSWORTH AVENUE FROM THE QUEEN CREEK
'SCHOOL AT QUEEN CREEK, IN S 33, T 1 S, R 7 E, 50 FEET EAST OF THE
'CENTER LINE OF THE AVENUE, 72 FEET NORTH OF A FENCE CORNER, 1 1/2 FEET
'WEST OF A FENCE, 1.4 FEET NORTH OF A METAL WITNESS POST, ABOUT 2 FEET
'ABOUT THE LEVEL OF THE AVENUE, AND SET IN THE TOP OF A CONCRETE POST
'PROJECTING 4 INCHES.
DU0687
DU0687                          STATION RECOVERY (1979)
DU0687
DU0687'RECOVERY NOTE BY LOCAL SURVEYOR (INDIVIDUAL OR FIRM) 1979
DU0687'RECOVERED IN GOOD CONDITION.
DU0687
DU0687                          STATION RECOVERY (1992)
DU0687
DU0687'RECOVERY NOTE BY NATIONAL GEODETIC SURVEY 1992
DU0687'MARK NOT FOUND.
1        National Geodetic Survey,   Retrieval Date = JANUARY  6, 1997
DU0689 ***********************************************************************
DU0689  DESIGNATION -  V 364
DU0689  PID         -  DU0689
DU0689  STATE/COUNTY-  AZ/MARICOPA
DU0689  USGS QUAD   -  HIGLEY (1982)
DU0689
DU0689                          *CURRENT SURVEY CONTROL
DU0689
DU0689* NAD 83(1986)-  33 18 23.      (N)    111 38 07.      (W)     SCALED
DU0689* NAVD 88     -       421.843  (meters)    1384.00    (feet)  ADJUSTED
DU0689
DU0689  GEOID HEIGHT-         -29.58  (meters)                       GEOID96
DU0689  DYNAMIC HT  -         421.333 (meters)   1382.32    (feet)  COMP
DU0689  MODELED GRAV-     979,415.3   (mgal)                        NAVD 88
DU0689
DU0689  VERT ORDER  -  FIRST     CLASS II
DU0689
DU0689
DU0689
DU0689.The horizontal coordinates were scaled from a topographic map and have
DU0689.an estimated accuracy of +/- 6 seconds.
DU0689
DU0689.The orthometric height was determined by differential leveling
DU0689.and adjusted by the National Geodetic Survey in November 1993.
DU0689
DU0689.The geoid height was determined by GEOID96.
DU0689
DU0689.The dynamic height is computed by dividing the NAVD 88
DU0689.geopotential number by the normal gravity value computed on the
DU0689.Geodetic Reference System of 1980 (GRS 80) ellipsoid at 45
DU0689.degrees latitude (G = 980.6199 gals.).
DU0689
DU0689.The modeled gravity was interpolated from observed gravity values.
DU0689
DU0689;                     North         East     Units  Estimated Accuracy
DU0689;SPC AZ C     -     255,760.      239,560.     MT  (+/- 180 meters Scaled)
DU0689
DU0689                          SUPERSEDED SURVEY CONTROL
DU0689
DU0689  NGVD 29     -       421.626  (meters)    1383.28    (feet)  ADJ UNCH
DU0689
DU0689.Superseded values are not recommended for survey control.
DU0689.NGS no longer adjusts projects to the NAD 27 or NGVD 29 datums.
DU0689.See file format.dat to determine how the superseded data were derived.
```

```
DU0689
DU0689_MARKER: DB = BENCH MARK DISK
DU0689_SETTING: 7 = SET IN TOP OF CONCRETE MONUMENT (ROUND)
DU0689_STAMPING: V 364 1967
DU0689_STABILITY: C = MAY HOLD, BUT OF TYPE COMMONLY SUBJECT TO
DU0689+STABILITY: SURFACE MOTION
DU0689_SATELLITE: THE SITE LOCATION WAS REPORTED AS SUITABLE FOR
DU0689+SATELLITE: SATELLITE OBSERVATIONS - January 11, 1992
DU0689
DU0689  HISTORY     - Date     Condition        Recov. By
DU0689  HISTORY     - 1967     MONUMENTED       CGS
DU0689  HISTORY     - 1979     GOOD             LOCSUR
DU0689  HISTORY     - 19920111 GOOD             NGS
DU0689
DU0689                          STATION DESCRIPTION
DU0689
DU0689'DESCRIBED BY COAST AND GEODETIC SURVEY 1967
DU0689'3.0 MI N FROM QUEEN CREEK.
DU0689'ABOUT 3.0 MILES NORTH ALONG ELLSWORTH AVENUE FROM THE QUEEN CREEK
DU0689'SCHOOL AT QUEEN CREEK, IN S 27, T 1 S, R 7 E, 49 FEET EAST OF THE
DU0689'CENTER LINE OF THE ROAD, 73 FEET EAST AND ACROSS THE ROAD FROM THE
DU0689'NORTH END OF A SPILLWAY CURB, 34 FEET NORTH OF THE CENTER OF A WIRE
DU0689'GATE, 2 FEET WEST OF A FENCE, 1.3 FEET NORTH OF A METAL WITNESS POST,
DU0689'ABOUT 1 FOOT ABOVE THE LEVEL OF THE ROAD, AND SET IN THE TOP OF A
DU0689'CONCRETE POST PROJECTING 6 INCHES.
DU0689
DU0689                          STATION RECOVERY (1979)
DU0689
DU0689'RECOVERY NOTE BY LOCAL SURVEYOR (INDIVIDUAL OR FIRM) 1979
DU0689'RECOVERED IN GOOD CONDITION.
DU0689
DU0689                          STATION RECOVERY (1992)
DU0689
DU0689'RECOVERY NOTE BY NATIONAL GEODETIC SURVEY 1992
DU0689'6.6 KM (4.10 MI) NORTHERLY ALONG ELLSWORTH ROAD FROM THE POST OFFICE
DU0689'IN QUEEN CREEK, 29.0 M (95.1 FT) NORTH OF THE CENTER OF A GATE, 13.4
DU0689'M (44.0 FT) EAST OF THE CENTER OF THE ROAD, 0.4 M (1.3 FT) NORTH OF A
DU0689'WITNESS POST, 0.4 M (1.3 FT) WEST OF A FENCE, 0.2 M (0.7 FT) BELOW
DU0689'THE LEVEL OF THE ROAD, AND THE MONUMENT IS FLUSH WITH THE GROUND
DU0689'SURFACE.
1        National Geodetic Survey,   Retrieval Date = JANUARY  6, 1997
DU2099 ***********************************************************************
DU2099  DESIGNATION -  T2S R7E SEC 10 NW COR
DU2099  PID         -  DU2099
DU2099  STATE/COUNTY-  AZ/MARICOPA
DU2099  USGS QUAD   -  HIGLEY (1982)
DU2099
DU2099                         *CURRENT SURVEY CONTROL
DU2099
DU2099* NAD 83(1992)-  33 16 39.90260(N)     111 38 05.55633(W)     ADJUSTED
DU2099* NAVD 88     -       424.7    (meters)     1393.     (feet)  VERTCON
DU2099
DU2099  LAPLACE CORR-           2.53  (seconds)                     DEFLEC96
DU2099  GEOID HEIGHT-         -29.59  (meters)                      GEOID96
DU2099
DU2099  HORZ ORDER  -  SECOND
DU2099
DU2099
DU2099
DU2099.The horizontal coordinates were established by classical geodetic methods
DU2099.and adjusted by the National Geodetic Survey in August 1993.
DU2099
DU2099.The NAVD 88 height was computed by applying the VERTCON shift value to
DU2099.the NGVD 29 height (displayed under SUPERSEDED SURVEY CONTROL.)
```

SUPERSEDED SURVEY CONTROL

```
D 83(1986)-  33 17 00.33602(N)    111 38 06.24962(W)     ADJUSTED
AD 27      -  33 17 00.15070(N)    111 38 03.77164(W)     ADJUSTED
NGVD 29    -       424.5    (meters)    1393.     (feet)  VERT ANG

.Superseded values are not recommended for survey control.
01.NGS no longer adjusts projects to the NAD 27 or NGVD 29 datums.
101.See file format.dat to determine how the superseded data were derived.
2101
U2101_MARKER: DD = SURVEY DISK
DU2101_SETTING: 7 = SET IN TOP OF CONCRETE MONUMENT (ROUND)
DU2101
DU2101  HISTORY     - Date     Condition        Recov. By
DU2101  HISTORY     - 1976     MONUMENTED       AZDT
DU2101  HISTORY     - 1979     GOOD             NGS
DU2101
DU2101                         STATION DESCRIPTION
DU2101
DU2101'DESCRIBED BY ARIZONA DEPARTMENT OF TRANSPORTATION 1976 (TT)
DU2101'THE STATION IS LOCATED ABOUT 2.42 MILES NORTH OF QUEEN CREEK AND
DU2101'5.2 MILES SOUTHEAST OF HIGLEY ALONG THE WEST SIDE OF ELLSWORTH ROAD.
DU2101'
DU2101'THE STATION IS AN ADOT HIGHWAY DIVISION DISK STAMPED WILLY 1975
DU2101'AND IS SET IN A 10 INCH DIAMETER CONCRETE MONUMENT.  THE DISK
DU2101'IS 0.16 MILES SOUTH OF AN IRRIGATION WELL AND PUMP ON THE WEST
DU2101'SIDE OF ELLSWORTH ROAD, 49.5 FEET WEST OF THE CENTERLINE OF
DU2101'ELLSWORTH ROAD, 6 FEET EAST OF CENTERLINE OF CONCRETE LINED
DU2101'IRRIGATION DITCH AND MARKED BY A WITNESS POST AND SIGN 2.9 FEET
DU2101'NORTH.
DU2101'
DU2101'REFERENCE MARK 1 IS A ADOT HIGHWAY DIVISION DISK STAMPED WILLY
DU2101'RM 1 1975 AND IS SET IN A 10 INCH DIAMETER CONCRETE MONUMENT 6
DU2101'FEET EAST OF CENTERLINE OF CONCRETE LINED DITCH.
DU2101'
DU2101'REFERENCE MARK 2 IS A ADOT HIGHWAY DIVISION DISK STAMPED RM 2
DU2101'WILLY 1975 AND IS SET IN A 10 INCH DIAMETER CONCRETE MONUMENT 6
DU2101'FEET EAST OF CENTERLINE OF CONCRETE LINED DITCH.
DU2101'
DU2101'TO REACH THE STATION FROM QUEEN CREEK, GO NORTH ON ELLSWORTH
DU2101'ROAD FOR 2.42 MILES AND STATION ON THE LEFT (WEST).
DU2101'
DU2101'HEIGHT OF LIGHT ABOVE STATION MARK 1.5 METERS.
DU2101
DU2101                         STATION RECOVERY (1979)
DU2101
DU2101'RECOVERY NOTE BY NATIONAL GEODETIC SURVEY 1979 (JVD)
DU2101'THE STATION AND BOTH REFERENCE MARK MONUMENTS WERE FOUND OUT
DU2101'OF GROUND.  BOTH SIDES OF ELLSWORTH ROAD HAVE BEEN GRADED.
DU2101'
DU2101'AIRLINE DISTANCE AND DIRECTION FROM NEAREST TOWN
DU2101'2.5 MILES SOUTHEAST OF WILLIAMS AIR FORCE BASE.
1        National Geodetic Survey,   Retrieval Date = JANUARY  6, 1997
DU2296 ***********************************************************************
DU2296  DESIGNATION -  E 517
DU2296  PID         -  DU2296
DU2296  STATE/COUNTY-  AZ/MARICOPA
DU2296  USGS QUAD   -  HIGLEY (1982)
DU2296
DU2296                         *CURRENT SURVEY CONTROL
DU2296
DU2296* NAD 83(1986)-  33 16 27.      (N)    111 38 06.      (W)     SCALED
DU2296* NAVD 88     -       424.896  (meters)    1394.01   (feet)  ADJUSTED
DU2296
```

```
     GEOID HEIGHT-          -29.59  (meters)                        GEOID96
     DYNAMIC HT  -          424.382 (meters)   1392.33    (feet)   COMP
     MODELED GRAV-      979,416.1   (mgal)                          NAVD 88
     VERT ORDER  -  FIRST     CLASS II
DU2296.The horizontal coordinates were scaled from a topographic map and have
DU2296.an estimated accuracy of +/- 6 seconds.
DU2296.The orthometric height was determined by differential leveling
DU2296.and adjusted by the National Geodetic Survey in November 1993.
DU2296.The geoid height was determined by GEOID96.
DU2296.The dynamic height is computed by dividing the NAVD 88
DU2296.geopotential number by the normal gravity value computed on the
DU2296.Geodetic Reference System of 1980 (GRS 80) ellipsoid at 45
DU2296.degrees latitude (G = 980.6199 gals.).
DU2296.The modeled gravity was interpolated from observed gravity values.
DU2296;                      North          East    Units  Estimated Accuracy
DU2296;SPC AZ C    -     252,190.       239,600.     MT  (+/- 180 meters Scaled)
DU2296                          SUPERSEDED SURVEY CONTROL
DU2296.No superseded survey control is available for this station.
DU2296_MARKER: I = METAL ROD
DU2296_SETTING: 59 = STAINLESS STEEL ROD IN SLEEVE (10 FT.+)
DU2296_STAMPING: E 517 1992
DU2296_PROJECTION: FLUSH
DU2296_STABILITY: A = MOST RELIABLE AND EXPECTED TO HOLD
DU2296+STABILITY: POSITION/ELEVATION WELL
DU2296_SATELLITE: THE SITE LOCATION WAS REPORTED AS SUITABLE FOR
DU2296+SATELLITE: SATELLITE OBSERVATIONS - 1992
DU2296_ROD/PIPE-DEPTH: 9.3  meters
DU2296_SLEEVE-DEPTH  : 0.9 meters
DU2296  HISTORY     - Date     Condition        Recov. By
DU2296  HISTORY     - 1992     MONUMENTED       NGS
DU2296                          STATION DESCRIPTION
DU2296'DESCRIBED BY NATIONAL GEODETIC SURVEY 1992
DU2296'3.0 KM (1.85 MI) NORTHERLY ALONG ELLSWORTH ROAD FROM THE POST OFFICE
DU2296'IN QUEEN CREEK, 29.8 M (97.8 FT) WEST OF THE ROAD CENTERLINE, 12.7 M
DU2296'(41.7 FT) WEST OF A FENCE CORNER, 8.3 M (27.2 FT) NORTH OF AND LEVEL
DU2296'WITH THE CENTER OF SUPERSTITION DRIVE, 1.9 M (6.2 FT) EAST OF A
DU2296'UTILITY POLE WITH A GUY CABLE, AND 0.9 M (3.0 FT) SOUTH OF A WITNESS
DU2296'POST AND FENCE.  NOTE--ACCESS TO THE DATUM POINT IS THROUGH A 5-INCH
DU2296'LOGO CAP.
1        National Geodetic Survey,   Retrieval Date = JANUARY  6, 1997
DU2297 ***********************************************************************
DU2297  DESIGNATION -  F 517
DU2297  PID         -  DU2297
DU2297  STATE/COUNTY-  AZ/MARICOPA
DU2297  USGS QUAD   -  HIGLEY (1982)
DU2297                          *CURRENT SURVEY CONTROL
DU2297
DU2297* NAD 83(1986)-  33 17 21.     (N)    111 38 06.     (W)     SCALED
```

```
DU2297* NAVD 88      -        423.450  (meters)     1389.27    (feet)  ADJUSTED
DU2297
DU2297  GEOID HEIGHT-          -29.59  (meters)                         GEOID96
DU2297  DYNAMIC HT  -          422.938 (meters)     1387.59    (feet)  COMP
DU2297  MODELED GRAV-      979,415.4   (mgal)                          NAVD 88
DU2297
DU2297  VERT ORDER  -  FIRST     CLASS II
DU2297
DU2297
DU2297
DU2297.The horizontal coordinates were scaled from a topographic map and have
DU2297.an estimated accuracy of +/- 6 seconds.
DU2297
DU2297.The orthometric height was determined by differential leveling
DU2297.and adjusted by the National Geodetic Survey in November 1993.
DU2297
DU2297.The geoid height was determined by GEOID96.
DU2297
DU2297.The dynamic height is computed by dividing the NAVD 88
DU2297.geopotential number by the normal gravity value computed on the
DU2297.Geodetic Reference System of 1980 (GRS 80) ellipsoid at 45
DU2297.degrees latitude (G = 980.6199 gals.).
DU2297
DU2297.The modeled gravity was interpolated from observed gravity values.
DU2297
DU2297;                    North         East    Units  Estimated Accuracy
DU2297;SPC AZ C     -    253,850.      239,590.     MT  (+/- 180 meters Scaled)
DU2297
DU2297                          SUPERSEDED SURVEY CONTROL
DU2297
DU2297.No superseded survey control is available for this station.
DU2297
DU2297_MARKER: I = METAL ROD
DU2297_SETTING: 59 = STAINLESS STEEL ROD IN SLEEVE (10 FT.+)
DU2297_STAMPING: F 517 1992
DU2297_PROJECTION: FLUSH
DU2297_STABILITY: A = MOST RELIABLE AND EXPECTED TO HOLD
DU2297+STABILITY: POSITION/ELEVATION WELL
DU2297_SATELLITE: THE SITE LOCATION WAS REPORTED AS SUITABLE FOR
DU2297+SATELLITE: SATELLITE OBSERVATIONS - 1992
DU2297_ROD/PIPE-DEPTH: 4.6  meters
DU2297_SLEEVE-DEPTH  : 0.9 meters
DU2297
DU2297  HISTORY      - Date     Condition        Recov. By
DU2297  HISTORY      - 1992     MONUMENTED       NGS
DU2297
DU2297                          STATION DESCRIPTION
DU2297
DU2297'DESCRIBED BY NATIONAL GEODETIC SURVEY 1992
DU2297'4.7 KM (2.90 MI) NORTHERLY ALONG ELLSWORTH ROAD FROM THE POST OFFICE
DU2297'IN QUEEN CREEK, NEAR THE SOUTHEAST CORNER OF THE WILLIAMS AIR FORCE
DU2297'BASE BOUNDARY FENCE, 0.3 KM (0.20 MI) SOUTH OF THE INTERSECTION OF
DU2297'PECOS ROAD, 16.0 M (52.5 FT) WEST OF THE ROAD CENTERLINE, 7.9 M (25.9
DU2297'FT) NORTH OF A FENCE CORNER, 0.5 M (1.6 FT) EAST OF A WITNESS POST
DU2297'AND FENCE, AND 0.3 M (1.0 FT) ABOVE THE LEVEL OF THE ROAD.
DU2297'NOTE--ACCESS TO THE DATUM POINT IS THROUGH A 5-INCH LOGO CAP.
Elapsed Time = 00:00:12
```