SCOTTSDALE DESERT GREENBELT

Rawhide Wash Hydrologic Report

Property of
Flood Control District of MC Library
Please Return to
3301 W. Durango
Phoenix, AZ 85009

by:
Greiner, Inc.
and
City of Scottsdale

Registered Professional Engineer (Civil)
CERTIFICATE
17756
SHI-EN
SHIAU
Date Signed 6/30/94
ARIZONA, U.S.A.

June 1994

TABLE OF CONTENTS

SECTION	*TITLE*	*PAGE*
1.0	INTRODUCTION	1
2.0	LOCATION	1
3.0	HYDROLOGIC MODELS	1
	3.1 WRA1 Description	2
	3.2 WRA2 Description	2
	3.3 GRSCEX Description	4
	3.4 GRSCFU Description	4
	3.5 Desert Greenbelt Design Flow	4
4.0	SUMMARY OF OUTPUT OF MODELS	5
5.0	APPENDIX	

HYDROREV.GRE

*LIST OF FIGURES AND TABLES**

TITLE

Figure 2.1	Rawhide Wash Watershed
Figure 3.1	Modeling Sequence
Figure 3.2	WRA1 Drainage Areas
Figure 3.3	WRA1 Flow Diagram
Figure 3.4	WRA2 Drainage Areas
Figure 3.5	WRA2 Flow Diagram
Figure 3.6	GRSCEX Drainage Areas
Figure 3.7	GRSCEX Flow Diagram
Figure 3.8	GRSCFU Drainage Areas
Figure 3.9	GRSCFU Flow Diagram
Table 4.1	Summary of Review

*NOTE: Figure 3.1 and Table 4.1 are within the text. All other figures are found in the Appendix.

SCOTTSDALE DESERT GREENBELT
Rawhide Wash Hydrologic Report

1.0 INTRODUCTION

To alleviate alluvial fan flooding problems in portions of Scottsdale north of the Central Arizona Project, the City of Scottsdale (COS) retained a team led by Greiner, Inc. to prepare preliminary designs for three proposed channelization projects identified by the City as a solution termed the Desert Greenbelt Project. The Desert Greenbelt will utilize natural channels to the extent possible to contain alluvial fan flooding. Rawhide Wash is one of the channels under study. The 1993 Federal Emergency Management Agency (FEMA) Flood Insurance Rate Maps identified Rawhide Wash as an AO floodplain zone below its alluvial fan apex. Greiner's study includes a review and revision of existing hydrologic models for Rawhide Wash.

2.0 LOCATION

Rawhide Wash drains an area of about 15 square miles before crossing Scottsdale Road into the City of Phoenix as seen in Figure 2.1. This drainage watershed is characterized by a steady slope of roughly two percent, with relatively dense natural desert vegetation on sandy soil in the undeveloped areas. The watershed remains largely undeveloped with the exception of areas downstream of Jomax Road and portions of the Troon North Development along Dynamite Road. Development is expected to continue throughout the watershed. This area of Scottsdale receives a rainfall depth of between 3.3 and 3.6 inches for the 100-year, 6-hour event, as presented in the National Oceanic and Atmospheric Administration (NOAA) Atlas 2. The 100-year, 6-hour event was used in the FEMA study and is used for this study.

3.0 HYDROLOGIC MODELS

Existing hydrologic models were reviewed as part of Greiner's Desert Greenbelt Study for Rawhide Wash. Included within Greiner's hydrologic review is a revision of these models to create the Rawhide Wash HEC-1 Model for use in the preliminary design of the Desert Greenbelt channel. Water Resource Associates (WRA) created a model, titled FAN4.6I, which is the FEMA model and was the base model for the study review. In Model FAN4.6I2, the first step of the revision is the routing and combining of the final hydrographs of the base model. Two models build upon FAN4.6I2 in the second revision. First, Greiner and COS, in Model RAW4EX improved the routing channel geometry and subdivided Drainage Area 21 for a final existing conditions model. Next, Greiner and COS adjusted the impervious values of RAW4EX for future conditions and incorporated provisions for the Desert Greenbelt in Model RAW4A. For purposes of clarity, from this point forward, Model FAN4.6I will be referred to as WRA1, Model FAN4.6I2 as WRA2, Model RAW4EX as GRSCEX (Greiner Scottsdale

Existing), and Model RAW4A as GRSCFU (Greiner Scottsdale Future). The sequence of modeling is seen in Figure 3.1.

3.1 WRA1 Description

As previously mentioned, WRA1 was the base HEC-1 model. Its drainage areas are shown in Figure 3.2 and its flow diagram in Figure 3.3. WRA1 was produced for existing conditions for the City of Scottsdale by Mr. Robert L. Ward and Water Resource Associates. WRA1 was submitted to and adopted by FEMA for the Flood Insurance Study. The primary apex is located downstream of Jomax Road. As seen in Figures 3.2 and 3.3, the hydrograph resulting from Drainage Sub-Areas 22, 23 and 24 is not routed to and combined at the primary apex, but instead represents a final secondary alluvial fan apex located two miles upstream from the primary apex. The two hydrographs resulting from Drainage Sub-Areas 25N and 25S, respectively, also are not routed to and combined at the primary apex, but represent upstream secondary apexes as final hydrographs as well. Since these secondary apex hydrographs are not taken to the primary apex, the flow at the primary apex only includes the flow resulting from Drainage Areas 16 through 21. This flow at the primary apex is not the entire true Rawhide Wash flow at this location. The entire Rawhide Wash flow includes this flow at the primary apex as well as the routed flow from three secondary apexes, and also the flow from the tributary area south of these apexes, refered to as Drainage Sub-Area 26, which was not included in WRA1.

3.2 WRA2 Description

In WRA2, the first revision of WRA1, the three final hydrographs at the secondary apexes of WRA1 are routed to and combined at the primary apex. New one-foot contour interval mapping and field observations in this area verified that all flow from the secondary apexes confluence with the main Rawhide Channel above the primary apex. Flow resulting from Drainage Sub-Area 26 was also added to the flow at the primary apex in this model. The drainage sub-areas included within this model now comprise the total watershed area of 13.81 square miles above the primary apex. The drainage areas included in this model are displayed in Figure 3.4 and the flow diagram in Figure 3.5.

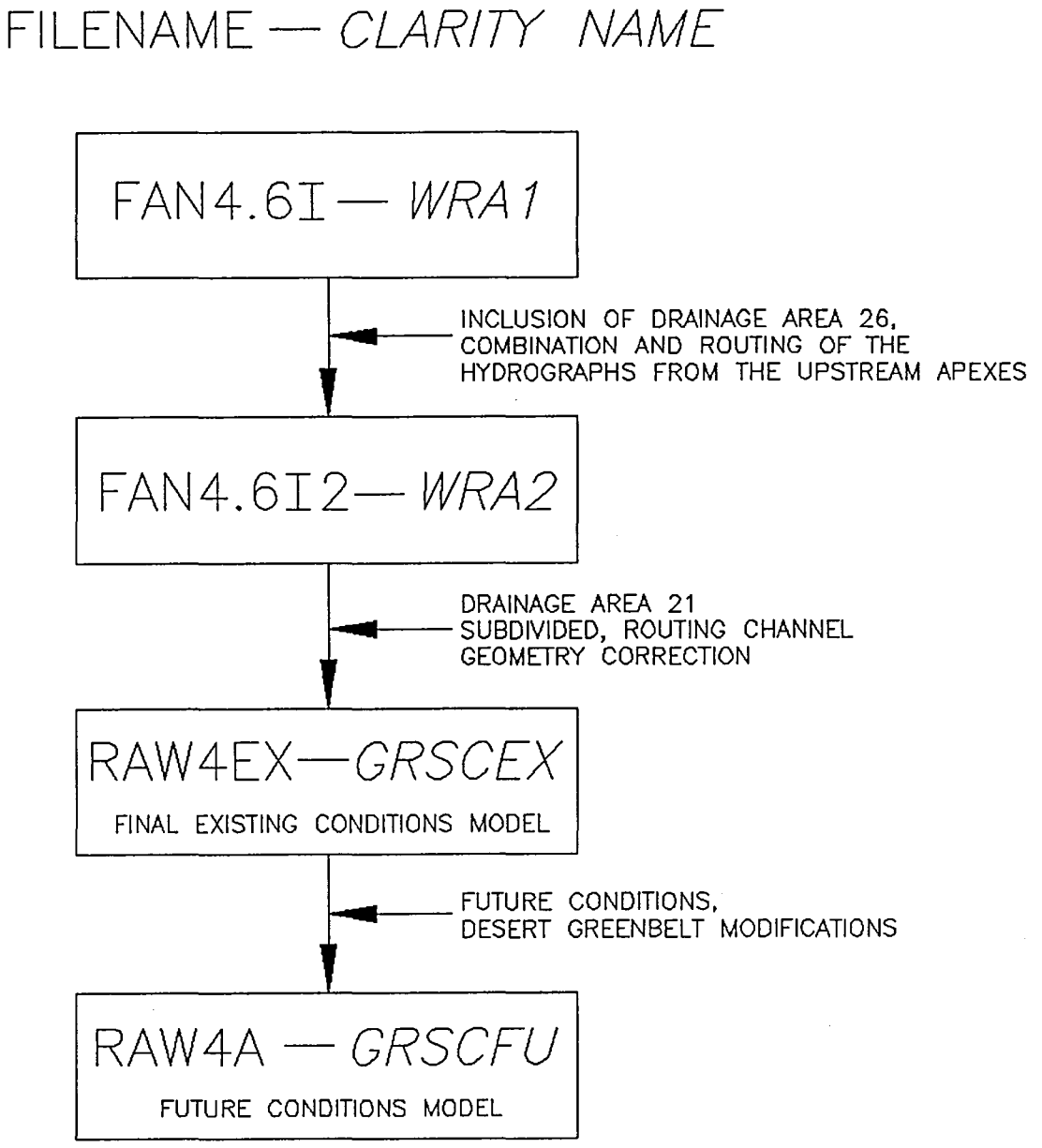

Greiner, Inc.

MODELING SEQUENCE

FIGURE 3.1

3.3 GRSCEX Description

The final revision of the existing conditions model, GRSCEX, subdivides and revises the routing channel geometry through Drainage Sub-Area 21. Among the hydrologic data investigated was the use of the Modified Puls '8 point' channel routing procedure. In the base model, WRA1, the routing channel geometry through Drainage Sub-Area 21 was assumed to be constant across the 27,600-foot routing reach length. This assumption continued to be used in WRA2. Investigations by Mr. Robert L. Ward and Greiner both concluded that the routing channel is not constant. COS, using the new one-foot contour interval mapping, and 100-foot scale aerial photography, subdivided Drainage Sub-Area 21 into eight drainage areas and the 27,600-foot-long channel into six routing reaches of different geometry and slope. The new drainage sub-areas are separate tributary areas to the main Rawhide Wash channel. Figures 3.6 and 3.7 show the drainage areas and flow diagram of GRSCEX.

3.4 GRSCFU Description

In creating the model to be used for the Desert Greenbelt Project's channel design, Greiner modified and created drainage sub-basins to reflect the planned system of collector channels, bridges and levees. Future fully developed watershed conditions were modeled by adjusting the percent impervious input data to reflect City of Scottsdale Natural Area Open Space (NAOS) land use requirements and planned land use element dwelling densities in the General Plan. As in GRSCEX, this model, GRSCFU, subdivides and revises the routing channel geometry through Drainage Sub-Area 21. GRSCFU's drainage areas are shown in Figure 3.8 and its flow diagram in Figure 3.9. Most of the Desert Greenbelt physical modifications, such as the collectors and berms, are located south of Jomax Road and do not affect the flow at the primary apex. Routing reach lengths were adjusted to reflect proposed Desert Greenbelt modifications.

3.5 Desert Greenbelt Design Flow

The above model, GRSCFU was developed to be the Desert Greenbelt design model, however, Greiner and COS also modeled for future conditions without the planned upstream Desert Greenbelt channel diversion cut-off to examine what interim flow conditions might be if the upper Desert Greenbelt improvements are never implemented. This model calculated a flow of 11,435 cfs at the primary apex. For Desert Greenbelt design purposes, GRSCFU's discharge value of 12,405 cfs will be utilized, since it is greater than 11,435 cfs. Future fully developed upstream watershed conditions (Model GRSCFU) were chosen for design purposes to reflect potential adverse watershed conditions, which is a requirement by FEMA in the design of major structural flood control measures on alluvial fans.

4.0 SUMMARY OF OUTPUT OF MODELS

Using the U.S. Army Corps of Engineers program HEC-1, hydrologic output data were created by each of the models. Results of the output of the HEC-1 models are summarized in Table 4.1. Included within the results are the types of conditions modeled, contributing area size, as well as the Drainage Sub-Area 21 routing channel geometry used. Flows at the three upstream apex locations, as seen in Figures 3.2, 3.4, 3.6, and 3.8 are shown with the contributing watershed area for each. The flow at the primary apex, its location also displayed on these figures, is the critical flow studied because this is the furthest downstream point in FEMA's original model, WRA1; and it is the flow proposed to be contained by the Desert Greenbelt Project. The model GRSCFU also includes flows at locations downstream of the primary apex.

Because the flows from the upstream secondary apexes were not included in FEMA's WRA1 model, and because it only represents existing upstream conditions, the flow at the primary apex in Model WRA1 was only 6,912 cfs. The first revision, WRA2, routed and combined the secondary apex hydrographs and incorporated the remaining contributing area to the primary apex for an existing condition flow of 8,541 cfs with the same conditions and parameters for the watershed. The final existing conditions model, GRSCEX, which revised the routing channel geometry and subdivided Drainage Sub-Area 21, produced a flow of 10,456 cfs at the primary apex. Modifying GRSCEX to reflect the proposed Desert Greenbelt channelization and modeling for future fully developed watershed conditions, Model GRSCFU calculates a design flow of 12,405 cfs at the primary apex. The increase in flow between the WRA models and the GRSC models is attributed to the subdivision of Drainage Sub-Area 21 and the revised channel geometry through the main Rawhide Wash channel. Due to less attenuation in the revised channel routing and a more coincidental combination of hydrographs from the routed secondary apex hydrographs with the main Rawhide Wash channel, a higher flow results in Models GRSCEX and GRSCFU. The location of the confluence is seen in Figures 3.2, 3.4, 3.6 and 3.8.

In summary, the hydrology model to be used for design of the Desert Greenbelt structural flood control measures, below the primary apex, on Rawhide Wash is future condition Model GRSCFU, which produces a 100-year peak discharge value of 12,405 cfs.

TABLE 4.1 – Summary of Results				
Description	WRA1	WRA2	GRSCEX	GRSCFU
Watershed Conditions	Existing	Existing	Existing	Future
Routing Channel Geometry (2)	Original	Original	Revised	Revised
Secondary Apex @ 24.05	3423 cfs	3423 cfs	3431 cfs (3)	3621 cfs
Contributing Area	2.27 sm	2.27 sm	2.27 sm	2.27 sm
Secondary Apex @ 25N	1210 cfs	1210 cfs	1223 cfs (3)	1291 cfs
Contributing Area	0.78 sm	0.78 sm	0.78 sm	0.78 sm
Secondary Apex @ 25S	1360 cfs	1360 cfs	1351 cfs (3)	1443 cfs
Contributing Area	0.63 sm	0.63 sm	0.63 sm	0.63 sm
Primary Apex	6912 cfs	8541 cfs	10,456 cfs	12,410 cfs
Contributing Area	9.70 sm	13.81 sm	13.81 sm	13.81 sm
Happy Valley Road	NA (1)	NA (1)	10,427 cfs (4)	12,361 cfs (4)
Contributing Area	NA (1)	NA (1)	13.81 sm	13.81 sm
Scottsdale Road	NA (1)	NA (1)	9458 cfs	12,009 cfs
Contributing Area	NA (1)	NA (1)	15.00 sm	15.00 sm

x206
x 70
x100
≈ 2000

Note: (1) Beyond model boundary
(2) Routing Channel Geometry refers to the main wash channel through D.A. 21
(3) GRSCEX uses a time interval of 3 minutes as compared with 5 minutes in previous models. This accounts for the slight difference in peak flows at the secondary apexes.
(4) The decrease in flow from upstream is due to routing losses.

5.0 APPENDIX

HYDROREV.GRE

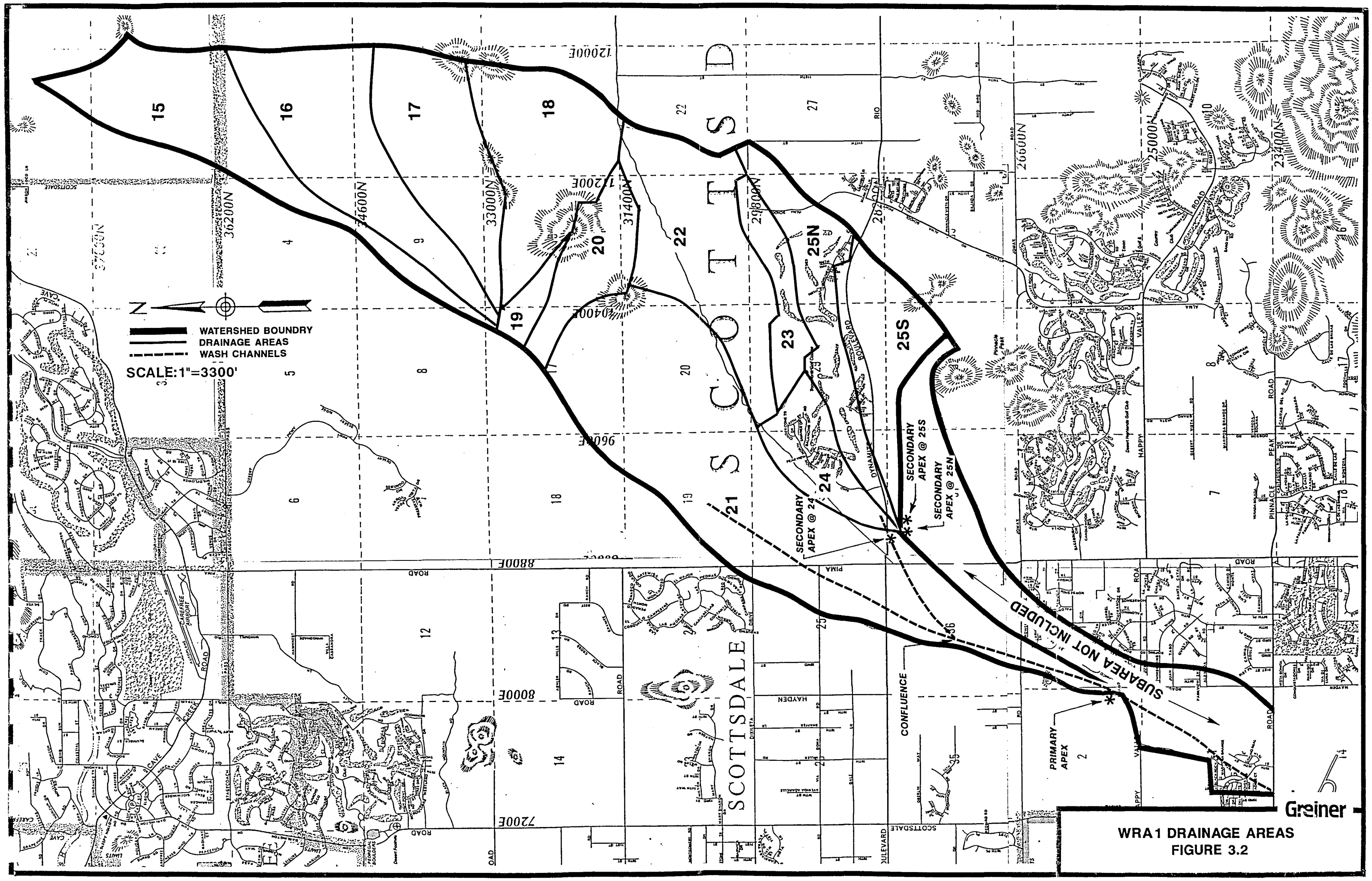

WRA1 DRAINAGE AREAS
FIGURE 3.2

P:\CADD\RWSCHMT2.DWG

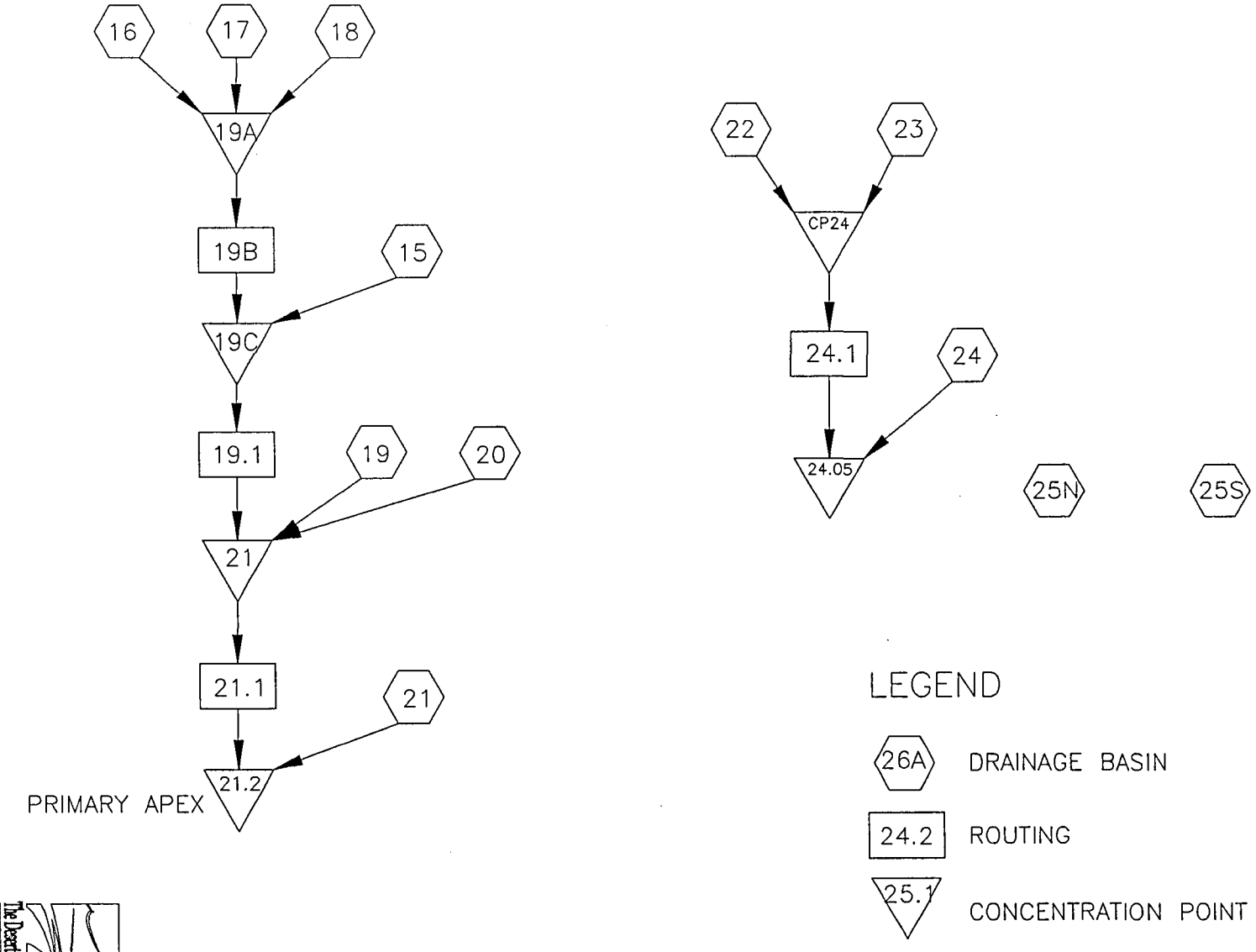

The Desert Greenbelt

Scottsdale Bond Project 1989 "Our Future in Progress"

Greiner, Inc.

WRA1 FLOW DIAGRAM

FIGURE 3.3

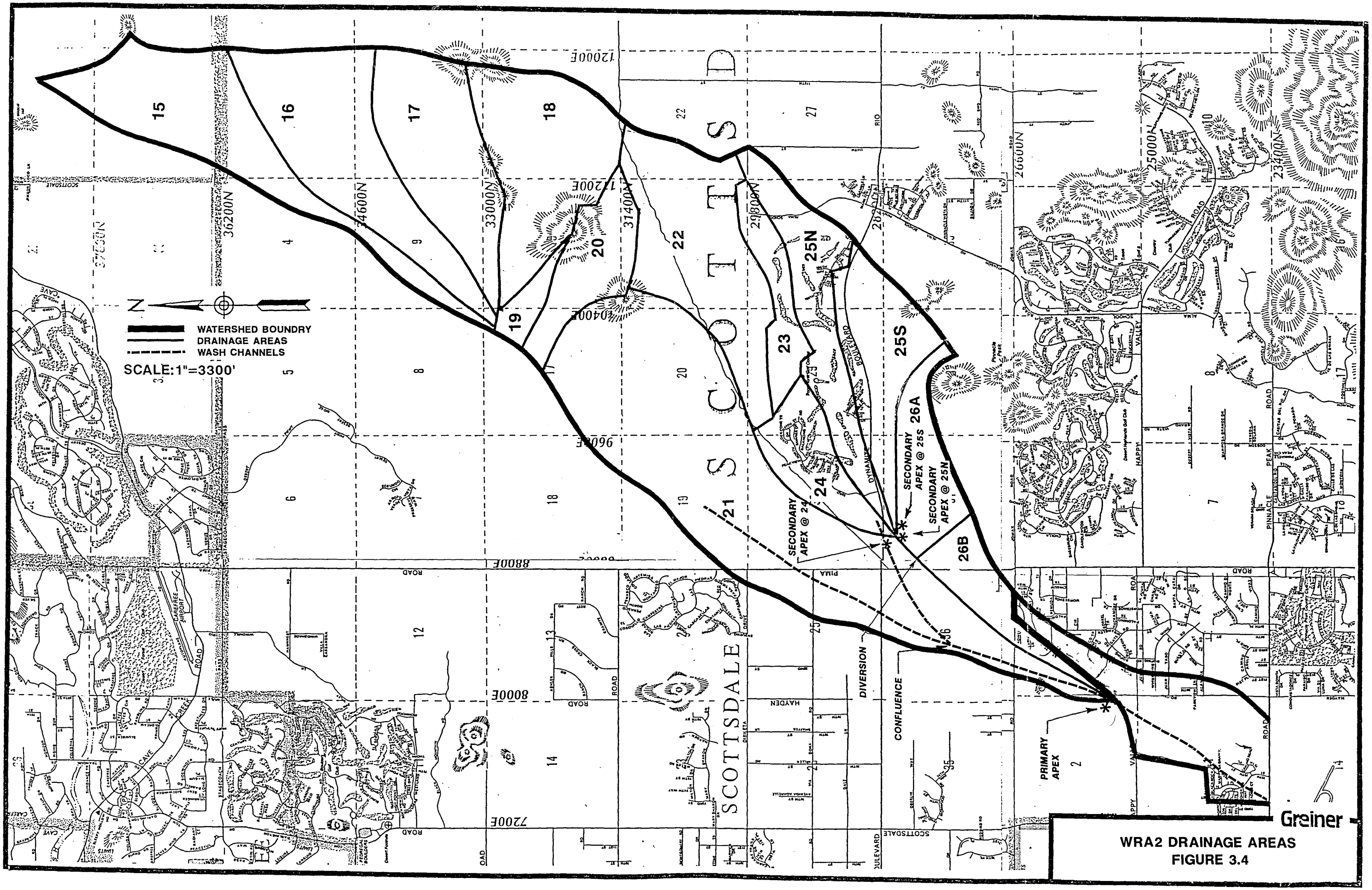

WRA2 DRAINAGE AREAS
FIGURE 3.4

P:\CADD\RWSCHMT4.DWG

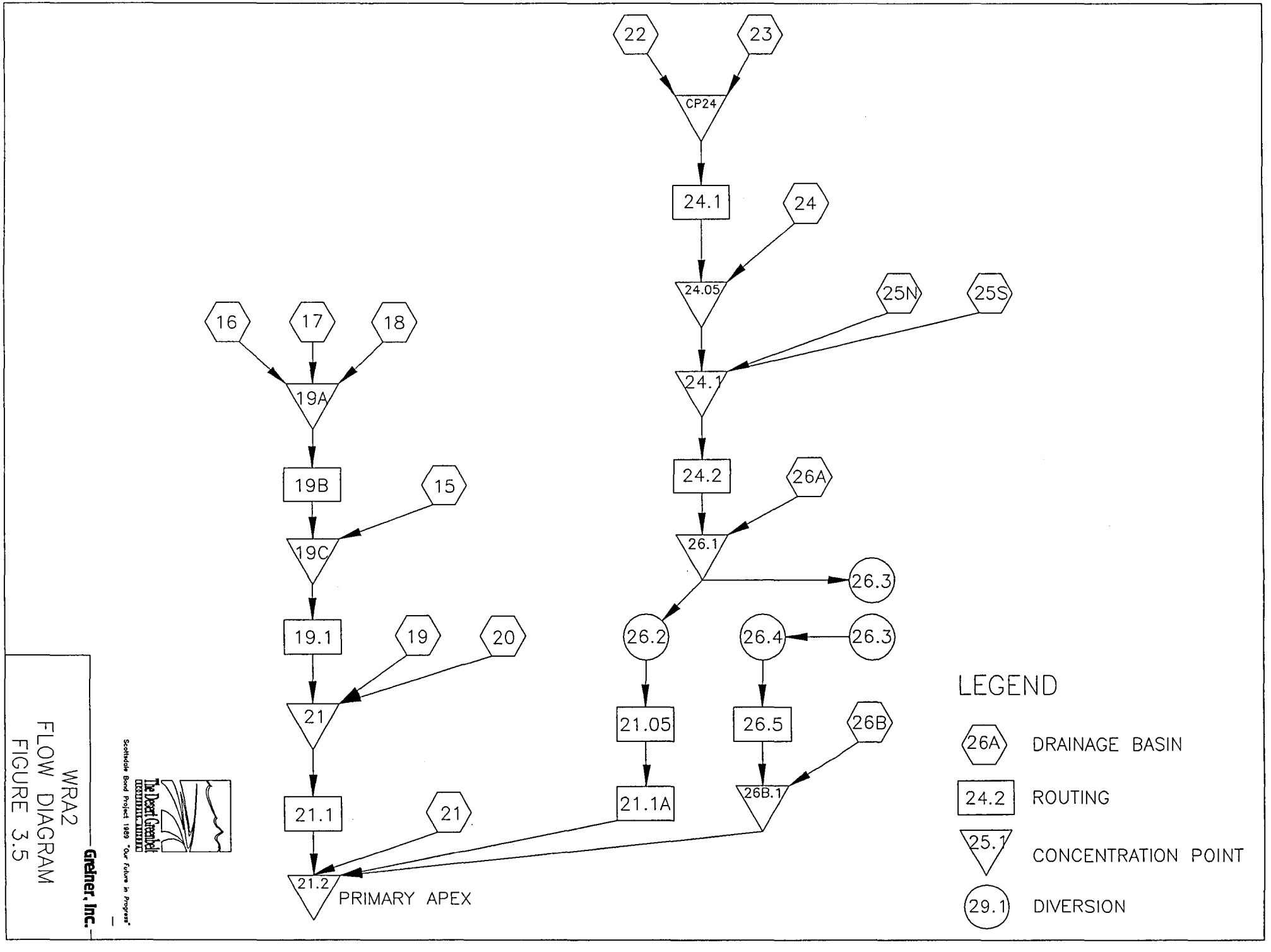

Greiner, Inc.

WRA2
FLOW DIAGRAM
FIGURE 3.5

The Desert Greenbelt
Scottsdale Bond Project 1989 "Our Future in Progress"

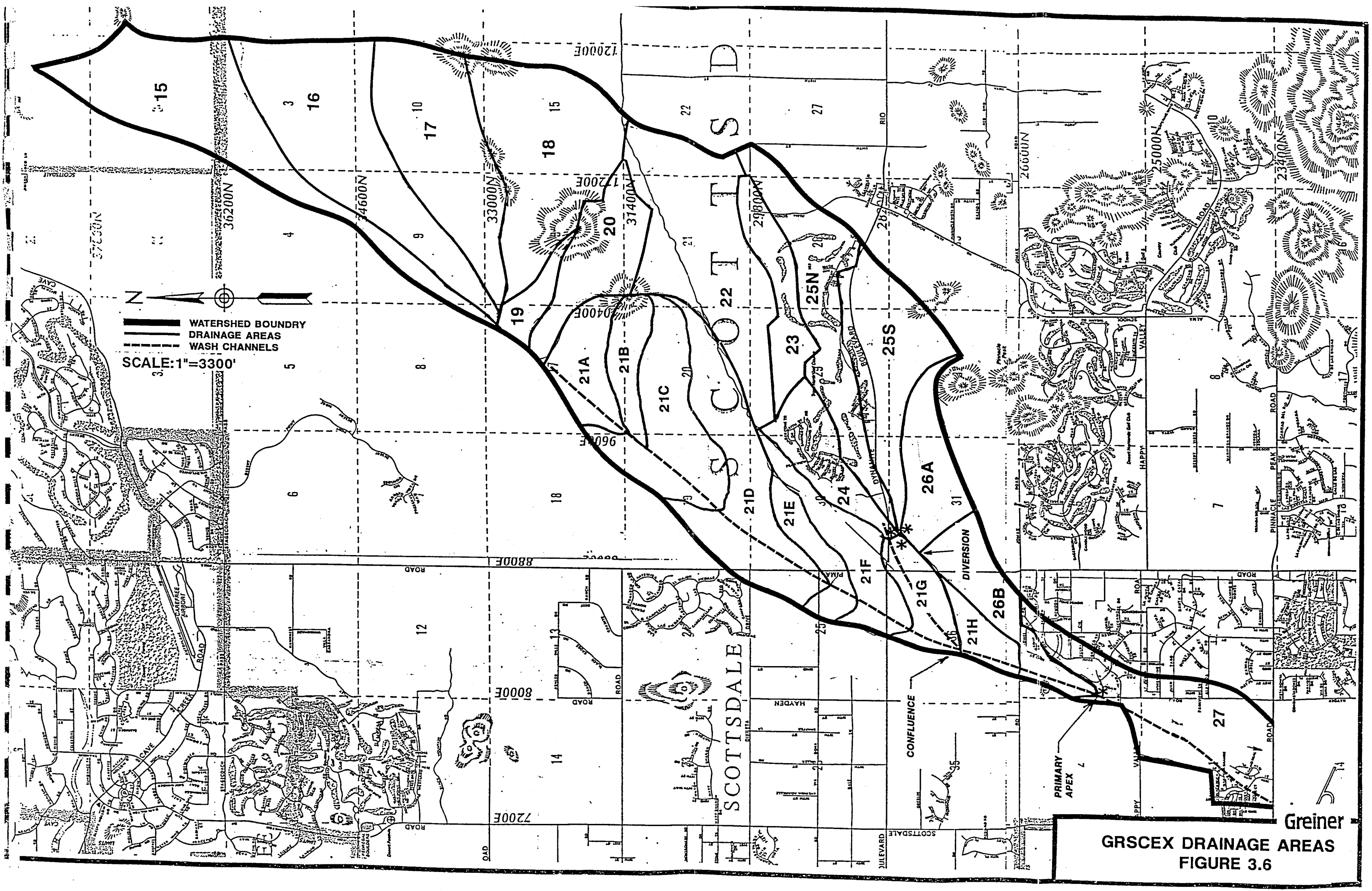

GRSCEX DRAINAGE AREAS
FIGURE 3.6

RWSCHMT5

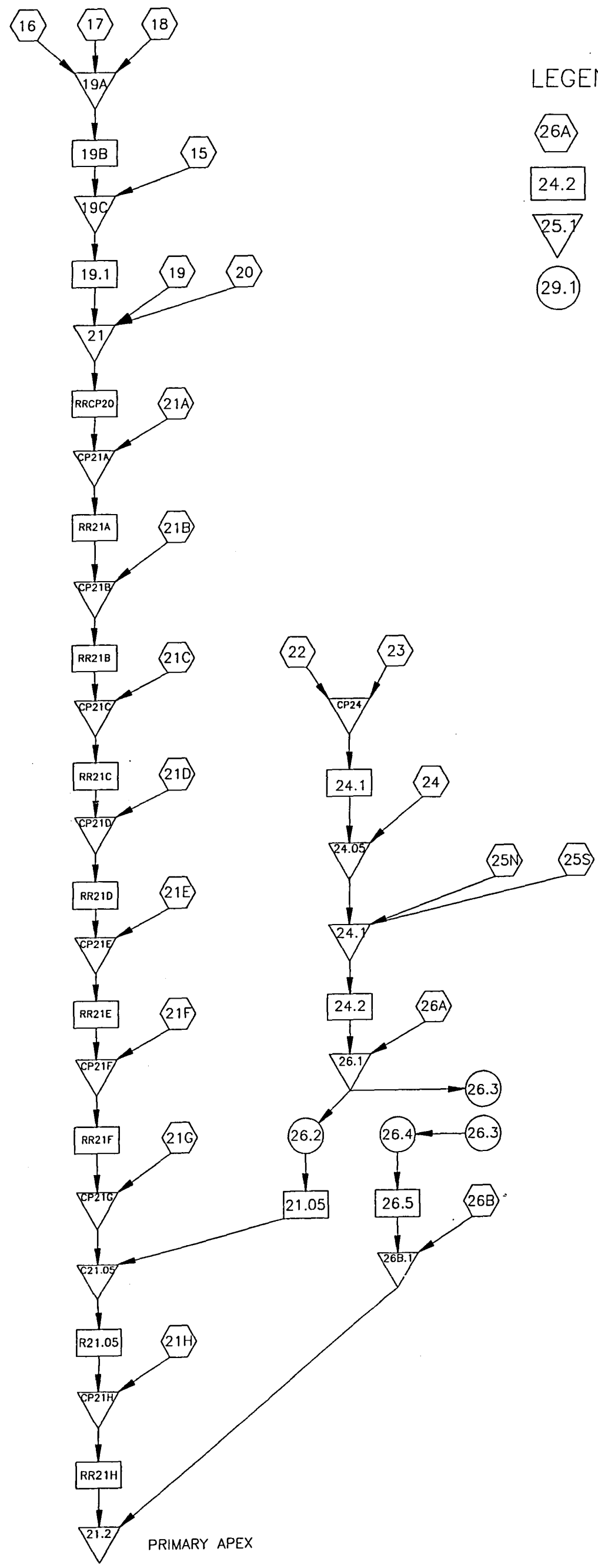

LEGEND

26A DRAINAGE BASIN

24.2 ROUTING

25.1 CONCENTRATION POINT

29.1 DIVERSION

GRSCEX
FLOW DIAGRAM
3.7

Greiner, Inc.

The Desert Greenbelt

Scottsdale Bond Project 1988 "Our Future in Progress"

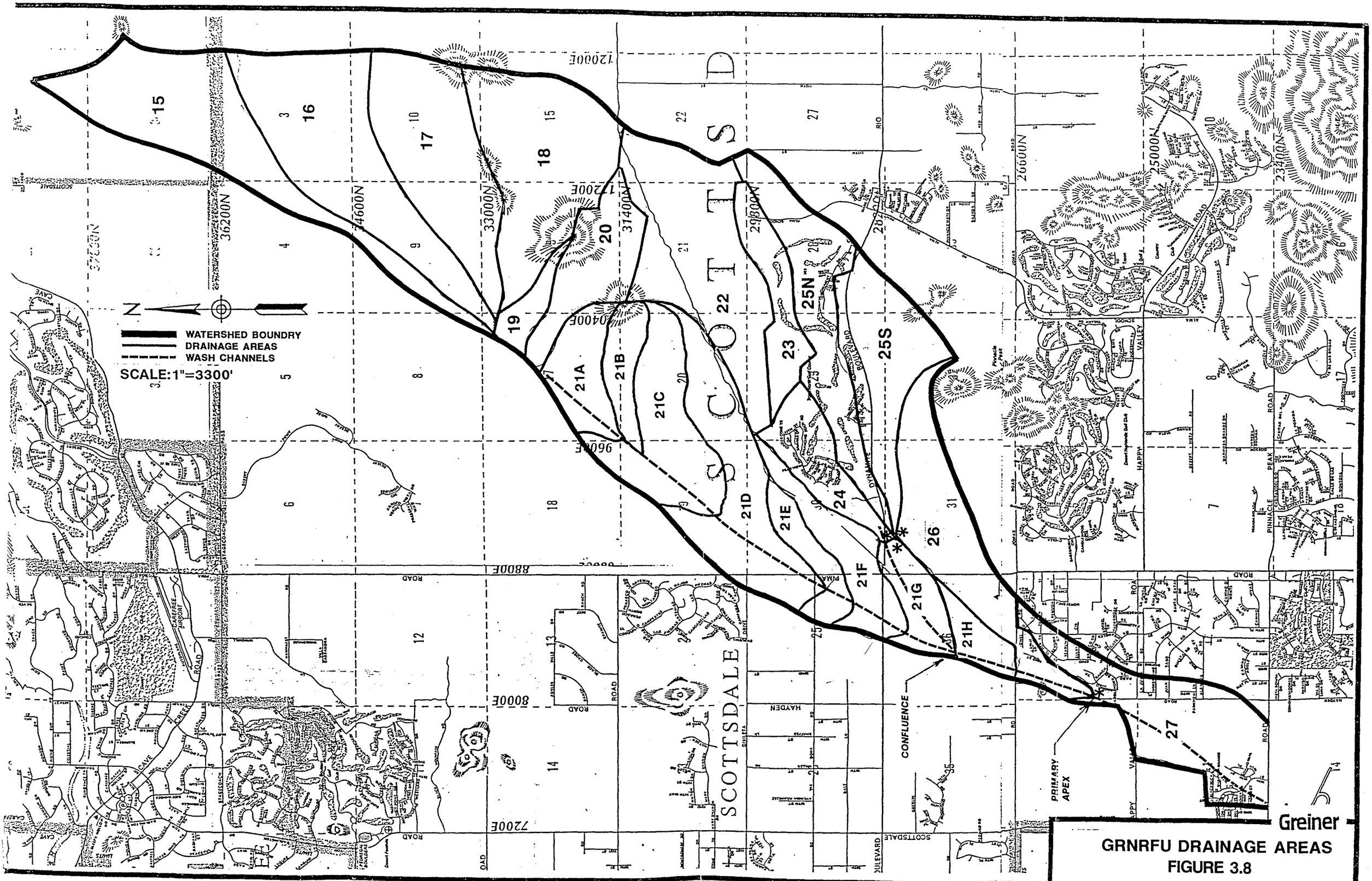

GRNRFU DRAINAGE AREAS
FIGURE 3.8

RWSCHMT5

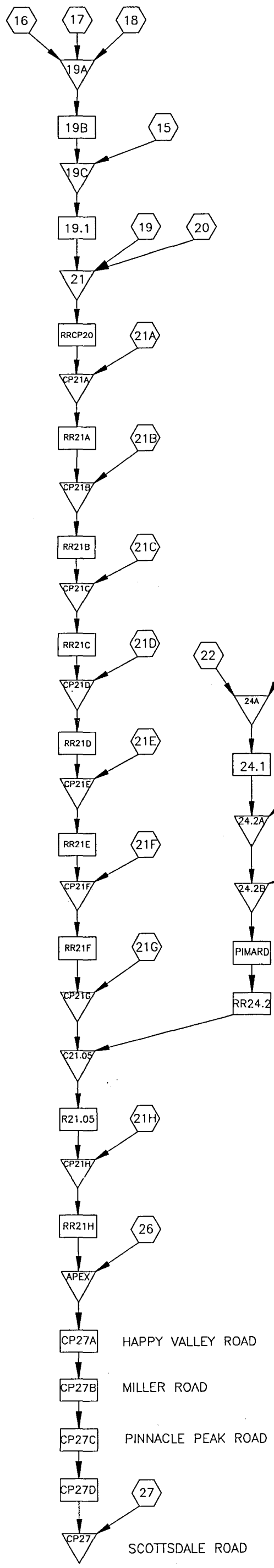

LEGEND

26A DRAINAGE BASIN

24.2 ROUTING

25.1 CONCENTRATION POINT

The Desert Greenbelt

Scottsdale Bond Project 1989 "Our Future in Progress"

Greiner, Inc.

GRSCFU
FLOW DIAGRAM
3.9

FAN4.6I - WRA1

```
****************************************
*                                      *
*   FLOOD HYDROGRAPH PACKAGE  (HEC-1)  *
*            SEPTEMBER 1990            *
*             VERSION 4.0              *
*                                      *
*  RUN DATE  01/10/1994  TIME  09:25:25 *
*                                      *
****************************************
```

```
****************************************
*                                      *
*    U.S. ARMY CORPS OF ENGINEERS      *
*    HYDROLOGIC ENGINEERING CENTER     *
*          609 SECOND STREET           *
*        DAVIS, CALIFORNIA 95616       *
*            (916) 756-1104            *
*                                      *
****************************************
```

```
X     X  XXXXXXX   XXXXX          X
X     X  X        X     X        XX
X     X  X        X              X
XXXXXXX  XXXX     X       XXXXX  X
X     X  X        X              X
X     X  X        X     X        X
X     X  XXXXXXX   XXXXX        XXX
```

THIS PROGRAM REPLACES ALL PREVIOUS VERSIONS OF HEC-1 KNOWN AS HEC1 (JAN 73), HEC1GS, HEC1DB, AND HEC1KW.

THE DEFINITIONS OF VARIABLES -RTIMP- AND -RTIOR- HAVE CHANGED FROM THOSE USED WITH THE 1973-STYLE INPUT STRUCTURE.
THE DEFINITION OF -AMSKK- ON RM-CARD WAS CHANGED WITH REVISIONS DATED 28 SEP 81. THIS IS THE FORTRAN77 VERSION
NEW OPTIONS: DAMBREAK OUTFLOW SUBMERGENCE , SINGLE EVENT DAMAGE CALCULATION, DSS:WRITE STAGE FREQUENCY,
DSS:READ TIME SERIES AT DESIRED CALCULATION INTERVAL LOSS RATE:GREEN AND AMPT INFILTRATION
KINEMATIC WAVE: NEW FINITE DIFFERENCE ALGORITHM

HEC-1 INPUT PAGE 1

```
LINE          ID.......1.......2.......3.......4.......5.......6.......7.......8.......9......10

  1           ID        NORTH SCOTTSDALE FLOOD INSURANCE STUDY, EXISTING CONDITIONS
  2           ID        1992 MODELING REVISIONS BASED ON REATA PASS SENSITIVITY ANALYSIS
  3           ID        MODEL FAN4.6I -- SUB-BASINS 15 THROUGH 21, & 22, 23, 24, 25N, & 25S
  4           ID        100-YEAR, 6-HOUR STORM, USING HEC-1 HYPOTHETICAL DISTRIBUTION
  5           ID        RAINFALL FROM NOAA ATLAS
            *DIAGRAM
  6           IT       5 06JAN92       0     100
  7           IO       5       0

  8           KK   SUB16
  9           KM        RUNOFF FROM SUB-BASIN 16
 10           BA  1.4570
 11           PH            9.70     .77    1.51    2.65    3.00    3.23    3.66
 12           LS              83
 13           UK     217   .0581     .20     100
 14           RK   14800   .0216    .045            TRAP      25       3

 15           KK   SUB17
 16           KM        RUNOFF FROM SUB-BASIN 17
 17           BA  1.1851
 18           LS              83
 19           UK     285   .0421     .20     100
```

```
 20          RK   12200   .0254    .045           TRAP      25       3

 21          KK   SUB18
 22          KM        RUNOFF FROM SUB-BASIN 18
 23          BA  1.2641
 24          LS              83
 25          UK     285   .0421     .20     100
 26          RK   10840   .0259    .045           TRAP      25       3

 27          KK   CP19A
 28          KM        COMBINE HYDROGRAPHS SUB16, SUB17, & SUB18
 29          HC       3

 30          KK   CP19B
 31          KM        ROUTE CP19A TO CP19B
 32          RS       1    FLOW      -1
 33          RC    .055    .040    .055    1100   .0155
 34          RX       0       1     126     132     167     173     298     299
 35          RY      10       8       3       0       0       3       8      10

 36          KK   SUB15
 37          KM        RUNOFF FROM SUB-BASIN 15
 38          BA  1.3702
 39          LS              82
 40          UK     217   .0581     .20     100
 41          RK   21200   .0236    .045           TRAP      25       3

 42          KK   CP19C
 43          KM        COMBINE HYDROGRAPHS SUB15 & CP19B
 44          HC       2
```



```
LINE         ID.......1.......2.......3.......4.......5.......6.......7.......8.......9......10


 45          KK    19.1      CP
 46          KM        ROUTE CP 19C TO CP 19.1
 47          RS       1    FLOW      -1
 48          RC    .055    .040    .055    1800   .0200
 49          RX       0       1     151     166     216     231     381     382
 50          RY      10       9       3       0       0       3       9      10

 51          KK   SUB19
 52          KM        RUNOFF FROM SUB-BASIN 19
 53          BA   .1872
 54          LS              84
 55          UK     275   .0800     .20     100
 56          RK    3730   .0352    .045    .160    TRAP      15       3
 57          RK    1800   .0200    .045           TRAP      50      30

 58          KK   SUB20
 59          KM        RUNOFF FROM SUB-BASIN 20
 60          BA   .5698
 61          LS              84
 62          UK     300   .0750     .20     100
 63          RK    9640   .0197    .045           TRAP      15       3

 64          KK    CP21
 65          KM        COMBINE SUB 19, SUB 20, & CP 19.1
 66          HC       3
```

```
 67          KK    21.1       CP
 68          KM        ROUTE CP 21 TO CP 21.1
 69          RS      13    FLOW      -1
 70          RC    .055    .040    .055   27600   .0196
 71          RX       0       1     201     211     261     271     471     472
 72          RY      10       4       2       0       0       2       4      10

 73          KK   SUB21
 74          KM        RUNOFF FROM SUB-BASIN 21
 75          KM        DRAINAGE AREA CHANGED TO MATCH VALUE USED BY MICHAEL BAKER Jr., INC.
 76          BA  3.6659
 77          LS              80
 78          UK     297   .0558     .20     100
 79          RK   27600   .0196    .045            TRAP      50      30

 80          KK    21.2       CP
 81          KM        COMBINE SUB 21 & CP 21.1 - APEX
 82          HC       2

 83          KK   SUB22
 84          KM        RUNOFF FROM SUB-BASIN 22
 85          BA  1.3860
 86          PH            2.27     .76    1.49    2.61    2.95    3.18    3.60
 87          LS              84
 88          UK     225   .0590     .20     100
 89          RK   13000   .0238    .045            TRAP      25       3
```



```
LINE         ID.......1.......2.......3.......4.......5.......6.......7.......8.......9......10

 90          KK   SUB23
 91          KM        RUNOFF FROM SUB-BASIN 23
 92          BA   .3945
 93          LS              84
 94          UK     225   .0590     .20     100
 95          RK   10200   .0304    .045            TRAP      20       3

 96          KK    CP24
 97          KM        COMBINE HYDROGRAPHS SUB22 & SUB23
 98          HC       2

 99          KK    24.1       CP
100          KM        ROUTE CP 24 TO CP 24.1
101          RS       3    FLOW      -1
102          RC    .055    .040    .055    6800   .0257
103          RX       0       1     101     107     122     128     228     229
104          RY      10       8       3       0       0       3       8      10

105          KK   SUB24
106          KM        RUNOFF FROM SUB-BASIN 24
107          KM        DRAINAGE AREA CHANGED TO MATCH VALUE USED BY MICHAEL BAKER Jr., INC.
108          BA   .4907
109          LS              77
110          UK     295   .0438     .20     100
111          RK    6800   .0257    .045            TRAP      15       3

112          KK    24.2       CP
113          KM        COMBINE SUB 24 & CP 24.1 - APEX
```

```
114          HC       2

115          KK     25N     SUB
116          KM        RUNOFF FROM SUB-BASIN 25N - APEX
117          BA   .7834
118          PH            .78     .75    1.48    2.59    2.93    3.15    3.58
119          LS             84
120          UK     295   .0438     .20     100
121          RK   16700   .0302    .045           TRAP      25       3

122          KK     25S     SUB
123          KM        RUNOFF FROM SUB-BASIN 25S - APEX
124          BA   .6256
125          PH            .63     .75    1.47    2.57    2.90    3.12    3.53
126          LS             86
127          UK     295   .0438     .20     100
128          RK    8900   .0278    .045           TRAP      25       3
129          ZZ
1
                SCHEMATIC DIAGRAM OF STREAM NETWORK
INPUT
 LINE      (V) ROUTING          (--->) DIVERSION OR PUMP FLOW

  NO.      (.) CONNECTOR        (<---) RETURN OF DIVERTED OR PUMPED FLOW

    8       SUB16
                .
                .
   15           .       SUB17
                .           .
                .           .
   21           .           .       SUB18
                .           .           .
                .           .           .
   27       CP19A.......................
                V
                V
   30       CP19B
                .
                .
   36           .       SUB15
                .           .
                .           .
   42       CP19C............
                V
                V
   45        19.1
                .
                .
   51           .       SUB19
                .           .
                .           .
   58           .           .       SUB20
                .           .           .
                .           .           .
   64        CP21........................
                V
                V
   67        21.1
                .
```

```
                .
  73            .       SUB21
                .          .
                .          .
  80        21.2............
                .
                .
  83            .       SUB22
                .          .
                .          .
  90            .          .       SUB23
                .          .          .
                .          .          .
  96            .        CP24............
                .          V
                .          V
  99            .        24.1
                .          .
                .          .
 105            .          .       SUB24
                .          .          .
                .          .          .
 112            .        24.2............
                .          .
                .          .
 115            .          .         25N
                .          .          .
                .          .          .
 122            .          .          .        25S
```

***) RUNOFF ALSO COMPUTED AT THIS LOCATION

```
1****************************************                    ****************************************
*                                      *                    *                                      *
    FLOOD HYDROGRAPH PACKAGE  (HEC-1)  *                    *   U.S. ARMY CORPS OF ENGINEERS       *
*           SEPTEMBER 1990             *                    *   HYDROLOGIC ENGINEERING CENTER      *
*            VERSION 4.0               *                    *         609 SECOND STREET            *
                                       *                    *      DAVIS, CALIFORNIA 95616         *
   RUN DATE  01/10/1994  TIME  09:25:25 *                    *          (916) 756-1104              *
*                                      *                    *                                      *
 ****************************************                    ****************************************
```

NORTH SCOTTSDALE FLOOD INSURANCE STUDY, EXISTING CONDITIONS
1992 MODELING REVISIONS BASED ON REATA PASS SENSITIVITY ANALYSIS
MODEL FAN4.6I -- SUB-BASINS 15 THROUGH 21, & 22, 23, 24, 25N, & 25S
100-YEAR, 6-HOUR STORM, USING HEC-1 HYPOTHETICAL DISTRIBUTION
RAINFALL FROM NOAA ATLAS

```
  7 IO        OUTPUT CONTROL VARIABLES
                    IPRNT          5  PRINT CONTROL
                    IPLOT          0  PLOT CONTROL
                    QSCAL         0.  HYDROGRAPH PLOT SCALE

   IT         HYDROGRAPH TIME DATA
                     NMIN          5  MINUTES IN COMPUTATION INTERVAL
                    IDATE     6JAN92  STARTING DATE
                    ITIME       0000  STARTING TIME
```

NQ	100	NUMBER OF HYDROGRAPH ORDINATES
NDDATE	6JAN92	ENDING DATE
NDTIME	0815	ENDING TIME
ICENT	19	CENTURY MARK

COMPUTATION INTERVAL .08 HOURS
TOTAL TIME BASE 8.25 HOURS

ENGLISH UNITS

DRAINAGE AREA	SQUARE MILES
PRECIPITATION DEPTH	INCHES
LENGTH, ELEVATION	FEET
FLOW	CUBIC FEET PER SECOND
STORAGE VOLUME	ACRE-FEET
SURFACE AREA	ACRES
TEMPERATURE	DEGREES FAHRENHEIT

RUNOFF SUMMARY
FLOW IN CUBIC FEET PER SECOND
TIME IN HOURS, AREA IN SQUARE MILES

	OPERATION	STATION	PEAK FLOW	TIME OF PEAK	AVERAGE FLOW FOR MAXIMUM PERIOD 6-HOUR	24-HOUR	72-HOUR	BASIN AREA	MAXIMUM STAGE	TIME OF MAX STAGE
	HYDROGRAPH AT	SUB16	2494.	3.33	297.	216.	216.	1.46		
	HYDROGRAPH AT	SUB17	2041.	3.33	241.	175.	175.	1.19		
	HYDROGRAPH AT	SUB18	2277.	3.25	257.	187.	187.	1.26		
+	3 COMBINED AT	CP19A	6661.	3.33	795.	578.	578.	3.91		
+	ROUTED TO	CP19B	6737.	3.33	795.	578.	578.	3.91		
									6.85	3.33
	HYDROGRAPH AT	SUB15	1760.	3.42	266.	194.	194.	1.37		
+	2 COMBINED AT	CP19C	8249.	3.33	1061.	772.	772.	5.28		
+	ROUTED TO	19.1	7963.	3.42	1060.	771.	771.	5.28		
									5.92	3.42
+	HYDROGRAPH AT	SUB19	428.	3.25	40.	29.	29.	.19		
+	HYDROGRAPH AT	SUB20	1026.	3.25	121.	88.	88.	.57		
+	3 COMBINED AT	CP21	8995.	3.42	1220.	888.	888.	6.03		

```
        ROUTED TO
+                       21.1     5452.    4.42       1181.       859.       859.       6.03
                                                                                                  4.16       4.42

        HYDROGRAPH AT
.                      SUB21     2555.    4.00        646.       470.       470.       3.67

        2 COMBINED AT
+                       21.2     6912.    4.33       1827.      1329.      1329.       9.70

        HYDROGRAPH AT
+                      SUB22     2855.    3.25        296.       215.       215.       1.39

        HYDROGRAPH AT
+                      SUB23      775.    3.25         84.        61.        61.        .39

        2 COMBINED AT
+                       CP24     3629.    3.25        379.       276.       276.       1.78

        ROUTED TO
.                       24.1     2885.    3.42        378.       275.       275.       1.78
+                                                                                                  5.56       3.42

        HYDROGRAPH AT
+                      SUB24      665.    3.33         77.        56.        56.        .49

        2 COMBINED AT
+                       24.2     3423.    3.42        455.       331.       331.       2.27

        HYDROGRAPH AT
.                        25N     1210.    3.42        165.       120.       120.        .78

        HYDROGRAPH AT
                         25S     1360.    3.25        140.       102.       102.        .63
1
                                   SUMMARY OF KINEMATIC WAVE - MUSKINGUM-CUNGE ROUTING
                                       (FLOW IS DIRECT RUNOFF WITHOUT BASE FLOW)
                                                                                INTERPOLATED TO
                                                                              COMPUTATION INTERVAL
          ISTAQ    ELEMENT      DT       PEAK    TIME TO     VOLUME      DT       PEAK    TIME TO     VOLUME
                                                   PEAK                                     PEAK

                              (MIN)     (CFS)     (MIN)      (IN)     (MIN)     (CFS)     (MIN)       (IN)

            SUB16   MANE       2.85   2577.21    198.71      1.89      5.00   2494.15    200.00       1.89

 CONTINUITY SUMMARY (AC-FT) - INFLOW= .0000E+00 EXCESS= .1494E+03 OUTFLOW= .1472E+03 BASIN STORAGE= .1086E+01 PERCENT ERROR=    .7

            SUB17   MANE       2.85   2086.55    197.12      1.89      5.00   2040.88    200.00       1.89

 CONTINUITY SUMMARY (AC-FT) - INFLOW= .0000E+00 EXCESS= .1215E+03 OUTFLOW= .1195E+03 BASIN STORAGE= .1099E+01 PERCENT ERROR=    .7

            SUB18   MANE       3.20   2315.93    195.27      1.89      5.00   2277.43    195.00       1.89

 CONTINUITY SUMMARY (AC-FT) - INFLOW= .0000E+00 EXCESS= .1296E+03 OUTFLOW= .1276E+03 BASIN STORAGE= .1043E+01 PERCENT ERROR=    .8
```

```
          SUB15  MANE        3.10   1820.38    206.69      1.81      5.00   1760.00    205.00        1.81

CONTINUITY SUMMARY (AC-FT) - INFLOW= .0000E+00 EXCESS= .1348E+03 OUTFLOW= .1322E+03 BASIN STORAGE= .1776E+01 PERCENT ERROR=    .6

          SUB19  MANE        1.78    428.36    193.36      1.98      5.00    427.93    195.00        1.98

CONTINUITY SUMMARY (AC-FT) - INFLOW= .0000E+00 EXCESS= .1998E+02 OUTFLOW= .1979E+02 BASIN STORAGE= .8758E-01 PERCENT ERROR=    .5

          SUB20  MANE        3.88   1093.81    196.75      1.97      5.00   1026.19    195.00        1.97

CONTINUITY SUMMARY (AC-FT) - INFLOW= .0000E+00 EXCESS= .6082E+02 OUTFLOW= .5993E+02 BASIN STORAGE= .3813E+00 PERCENT ERROR=    .8

          SUB21  MANE        4.25   2563.83    236.57      1.64      5.00   2555.29    240.00        1.64

CONTINUITY SUMMARY (AC-FT) - INFLOW= .0000E+00 EXCESS= .3317E+03 OUTFLOW= .3210E+03 BASIN STORAGE= .8677E+01 PERCENT ERROR=    .6

          SUB22  MANE        2.78   2899.27    195.38      1.98      5.00   2854.64    195.00        1.98

CONTINUITY SUMMARY (AC-FT) - INFLOW= .0000E+00 EXCESS= .1482E+03 OUTFLOW= .1464E+03 BASIN STORAGE= .8886E+00 PERCENT ERROR=    .6

          SUB23  MANE        2.38    802.15    195.79      1.98      5.00    774.69    195.00        1.98

CONTINUITY SUMMARY (AC-FT) - INFLOW= .0000E+00 EXCESS= .4218E+02 OUTFLOW= .4169E+02 BASIN STORAGE= .2674E+00 PERCENT ERROR=    .5

          SUB24  MANE        2.22    691.79    197.84      1.47      5.00    664.81    200.00        1.46

CONTINUITY SUMMARY (AC-FT) - INFLOW= .0000E+00 EXCESS= .3899E+02 OUTFLOW= .3836E+02 BASIN STORAGE= .3428E+00 PERCENT ERROR=    .7

            25N  MANE        3.58   1228.04    202.87      1.95      5.00   1210.01    205.00        1.95

CONTINUITY SUMMARY (AC-FT) - INFLOW= .0000E+00 EXCESS= .8352E+02 OUTFLOW= .8167E+02 BASIN STORAGE= .1113E+01 PERCENT ERROR=    .9

            25S  MANE        3.01   1378.90    196.15      2.09      5.00   1360.14    195.00        2.09

CONTINUITY SUMMARY (AC-FT) - INFLOW= .0000E+00 EXCESS= .7073E+02 OUTFLOW= .6965E+02 BASIN STORAGE= .5362E+00 PERCENT ERROR=    .8


*** NORMAL END OF HEC-1 ***
```

FAN4.6I2 - WRA2

```
****************************************
*                                      *
*   FLOOD HYDROGRAPH PACKAGE  (HEC-1)  *
*            SEPTEMBER 1990            *
*             VERSION 4.0              *
*                                      *
*  RUN DATE  03/01/1994  TIME  17:43:50 *
*                                      *
****************************************
```

```
****************************************
*                                      *
*    U.S. ARMY CORPS OF ENGINEERS      *
*    HYDROLOGIC ENGINEERING CENTER     *
*          609 SECOND STREET           *
*       DAVIS, CALIFORNIA 95616        *
*           (916) 756-1104             *
*                                      *
****************************************
```

```
X     X  XXXXXXX   XXXXX          X
X     X  X        X     X        XX
X     X  X        X              X
XXXXXXX  XXXX     X       XXXXX  X
X     X  X        X              X
X     X  X        X     X        X
X     X  XXXXXXX   XXXXX         XXX
```

THIS PROGRAM REPLACES ALL PREVIOUS VERSIONS OF HEC-1 KNOWN AS HEC1 (JAN 73), HEC1GS, HEC1DB, AND HEC1KW.

THE DEFINITIONS OF VARIABLES -RTIMP- AND -RTIOR- HAVE CHANGED FROM THOSE USED WITH THE 1973-STYLE INPUT STRUCTURE.
THE DEFINITION OF -AMSKK- ON RM-CARD WAS CHANGED WITH REVISIONS DATED 28 SEP 81. THIS IS THE FORTRAN77 VERSION
NEW OPTIONS: DAMBREAK OUTFLOW SUBMERGENCE , SINGLE EVENT DAMAGE CALCULATION, DSS:WRITE STAGE FREQUENCY,
DSS:READ TIME SERIES AT DESIRED CALCULATION INTERVAL LOSS RATE:GREEN AND AMPT INFILTRATION
KINEMATIC WAVE: NEW FINITE DIFFERENCE ALGORITHM


```
LINE          ID.......1.......2.......3.......4.......5.......6.......7.......8.......9......10

  1           ID        NORTH SCOTTSDALE FLOOD INSURANCE STUDY, EXISTING CONDITIONS
  2           ID        1992 MODELING REVISIONS BASED ON REATA PASS SENSITIVITY ANALYSIS
  3           ID        MODEL FAN4.6I2 -- SUB-BASINS 15 THROUGH 21, & 22, 23, 24, 25N, & 25S
  4           ID        100-YEAR, 6-HOUR STORM, USING HEC-1 HYPOTHETICAL DISTRIBUTION
  5           ID        RAINFALL FROM NOAA ATLAS
              *DIAGRAM
  6           IT       5 06JAN92       0     100
  7           IO       5       0

  8           KK   SUB16
  9           KM        RUNOFF FROM SUB-BASIN 16
 10           BA  1.4570
 11           PH            9.70     .77    1.51    2.65    3.00    3.23    3.66
 12           LS              83
 13           UK     217   .0581     .20     100
 14           RK   14800   .0216    .045           TRAP      25       3

 15           KK   SUB17
 16           KM        RUNOFF FROM SUB-BASIN 17
 17           BA  1.1851
 18           LS              83
 19           UK     285   .0421     .20     100
```

```
 20          RK   12200   .0254    .045           TRAP      25       3

 21          KK   SUB18
 22          KM        RUNOFF FROM SUB-BASIN 18
 23          BA  1.2641
 24          LS             83
 25          UK     285   .0421     .20     100
 26          RK   10840   .0259    .045           TRAP      25       3

 27          KK   CP19A
 28          KM        COMBINE HYDROGRAPHS SUB16, SUB17, & SUB18
 29          HC       3

 30          KK   CP19B
 31          KM        ROUTE CP19A TO CP19B
 32          RS       1    FLOW      -1
 33          RC    .055    .040    .055    1100   .0155
 34          RX       0       1     126     132     167     173     298     299
 35          RY      10       8       3       0       0       3       8      10

 36          KK   SUB15
 37          KM        RUNOFF FROM SUB-BASIN 15
 38          BA  1.3702
 39          LS             82
 40          UK     217   .0581     .20     100
 41          RK   21200   .0236    .045           TRAP      25       3

 42          KK   CP19C
 43          KM        COMBINE HYDROGRAPHS SUB15 & CP19B
 44          HC       2
```



```
LINE         ID.......1.......2.......3.......4.......5.......6.......7.......8.......9......10

 45          KK    19.1      CP
 46          KM        ROUTE CP 19C TO CP 19.1
 47          RS       1    FLOW      -1
 48          RC    .055    .040    .055    1800   .0200
 49          RX       0       1     151     166     216     231     381     382
 50          RY      10       9       3       0       0       3       9      10

 51          KK   SUB19
 52          KM        RUNOFF FROM SUB-BASIN 19
 53          BA   .1872
 54          LS             84
 55          UK     275   .0800     .20     100
 56          RK    3730   .0352    .045    .160    TRAP      15       3
 57          RK    1800   .0200    .045           TRAP      50      30

 58          KK   SUB20
 59          KM        RUNOFF FROM SUB-BASIN 20
 60          BA   .5698
 61          LS             84
 62          UK     300   .0750     .20     100
 63          RK    9640   .0197    .045           TRAP      15       3

 64          KK    CP21
 65          KM        COMBINE SUB 19, SUB 20, & CP 19.1
 66          HC       3
```

```
 67          KK    21.1       CP
 68          KM        ROUTE CP 21 TO CP 21.1
 69          RS      13     FLOW      -1
 70          RC    .055     .040    .055   27600   .0196
 71          RX       0        1     201     211     261     271     471     472
 72          RY      10        4       2       0       0       2       4      10

 73          KK   SUB21
 74          KM        RUNOFF FROM SUB-BASIN 21
 75          KM        DRAINAGE AREA CHANGED TO MATCH VALUE USED BY MICHAEL BAKER Jr., INC.
 76          BA  3.6659
 77          LS              80
 78          UK     297   .0558     .20     100
 79          RK   27600   .0196    .045            TRAP      50      30

 80          KK   SUB22
 81          KM        RUNOFF FROM SUB-BASIN 22
 82          BA  1.3860
 83          PH            2.27     .76    1.49    2.61    2.95    3.18    3.60
 84          LS              84
 85          UK     225   .0590     .20     100
 86          RK   13000   .0238    .045            TRAP      25       3
                                          HEC-1 INPUT                                          PAGE  3

LINE         ID.......1.......2.......3.......4.......5.......6.......7.......8.......9......10


 87          KK   SUB23
 88          KM        RUNOFF FROM SUB-BASIN 23
 89          BA   .3945
 90          LS              84
 91          UK     225   .0590     .20     100
 92          RK   10200   .0304    .045            TRAP      20       3

 93          KK    CP24
 94          KM        COMBINE HYDROGRAPHS SUB22 & SUB23
 95          HC       2

 96          KK    24.1       CP
 97          KM        ROUTE CP 24 TO CP 24.1
 98          RS       3     FLOW      -1
 99          RC    .055     .040    .055    6800   .0257
100          RX       0        1     101     107     122     128     228     229
101          RY      10        8       3       0       0       3       8      10

102          KK   SUB24
103          KM        RUNOFF FROM SUB-BASIN 24
104          KM        DRAINAGE AREA CHANGED TO MATCH VALUE USED BY MICHAEL BAKER Jr., INC.
105          BA   .4907
106          LS              77
107          UK     295   .0438     .20     100
108          RK    6800   .0257    .045            TRAP      15       3

109          KK   24.05       CP
110          KM       COMBINE SUB-BASINS 22-24
111          HC       2

112          KK     25N      SUB
113          KM        RUNOFF FROM SUB-BASIN 25N
```

```
114          BA   .7834
115          PH            .78     .75    1.48    2.59    2.93    3.15    3.58
116          LS             84
117          UK    295   .0438     .20     100
118          RK  16700   .0302    .045            TRAP      25       3

119          KK    25S     SUB
120          KM        RUNOFF FROM SUB-BASIN 25S
121          BA   .6256
122          PH            .63     .75    1.47    2.57    2.90    3.12    3.53
123          LS             86
124          UK    295   .0438     .20     100
125          RK   8900   .0278    .045            TRAP      25       3

126          KK   24.1      CP
127          KM        COMBINE HYDROGRAPHS CP24.1 & SUB24 & SUB25N & SUB25S
128          HC      3
```



```
LINE         ID.......1.......2.......3.......4.......5.......6.......7.......8.......9......10


129          KK   24.2      CP
130          KM        ROUTE HYDROGRAPH CP24.1 TO CP24.2
131          RS      1    FLOW      -1
132          RC   .055    .040    .055    2700   .0155
133          RX      0       1      21      33      83      95     195     205
134          RY     10       8       3       0       0       3       8      10

135          KK    26A     SUB
136          KM        RUNOFF FROM SUB-BASIN 26A
137          BA   .1612
138          LS             78
139          UK    200    .025      .2     100
140          RK   1400   .0217    .045            TRAP      60       7

141          KK   26.1      CP
142          KM        COMBINE SUB 26A AND CP 24.2
143          HC      2

144          KK   26.2     DIV
145          KM        DIVERT FLOW FROM CP26.1 TO SUB26B
146          DT   26.3
147          DI      0     500    1000   10000
148          DQ      0     250     500    5000

149          KK  21.05       C
150          KM        ROUTE DIV26.2 TO 21.05 - CONFLUENCE
151          RS      4    FLOW      -1
152          RC   .055    .040    .055    3900   .0269
153          RX      0       1      21      33      83      95     195     205
154          RY     10       8       3       0       0       3       8      10

155          KK  21.1A       C
156          KM        ROUTE C21.05 TO C 21.1A
157          RS     13    FLOW      -1
158          RC   .055     .04    .055    7100   .0196
159          RX      0       1     201     211     261     271     471     472
160          RY     10       4       2       0       0       2       4      10
```

```
161          KK    26.4     RET
162          KM        RETRIEVE DIVERTED FLOW FROM CP26.1
163          DR    26.3

164          KK    26.5     RET
165          KM        ROUTE DIVERTED FLOW FROM RET 26.4 TO SUB26B
166          RS       3    FLOW      -1
167          RC    .055     .04    .055   10000    .025
168          RX       0       1       3      15      35      47      49      50
169          RY      10       8       3       0       0       3       8      10
```



```
LINE         ID.......1.......2.......3.......4.......5.......6.......7.......8.......9......10


170          KK     26B     SUB
171          KM        RUNOFF FROM SUB26B
172          BA   .2736
173          LS              74
174          UK     200    .025     .2     100
175          RK   11000   .0263    .045           TRAP      35      10

176          KK   26B.1      CP
177          KM        COMBINE SUB26B AND RET26.5
178          HC       2

179          KK    21.2      CP
180          KM        COMBINE HYDROGRAPHS CP21.1 & SUB21 & C21.1A & CP26B.1 - APEX
181          HC       4
182          ZZ
```

```
                SCHEMATIC DIAGRAM OF STREAM NETWORK
INPUT
 LINE      (V) ROUTING          (--->) DIVERSION OR PUMP FLOW

  NO.      (.) CONNECTOR        (<---) RETURN OF DIVERTED OR PUMPED FLOW

    8       SUB16
                .
                .
   15           .       SUB17
                .           .
                .           .
   21           .           .       SUB18
                .           .           .
                .           .           .
   27       CP19A.......................
                V
                V
   30       CP19B
                .
                .
   36           .       SUB15
                .           .
                .           .
   42       CP19C............
                V
                V
   45        19.1
                .
```

```
          .
51        .       SUB19
          .           .
          .           .
58        .           .       SUB20
          .           .           .
          .           .           .
64      CP21.......................
          V
          V
67      21.1
          .
          .
73        .       SUB21
          .           .
          .           .
80        .           .       SUB22
          .           .           .
          .           .           .
87        .           .           .       SUB23
          .           .           .           .
          .           .           .           .
93        .           .        CP24............
          .           .           V
          .           .           V
96        .           .        24.1
          .           .           .
          .           .           .
102       .           .           .       SUB24
          .           .           .           .
          .           .           .           .
109       .           .       24.05............
          .           .           .
          .           .           .
112       .           .           .         25N
          .           .           .           .
          .           .           .           .
119       .           .           .           .         25S
          .           .           .           .           .
          .           .           .           .           .
126       .           .        24.1........................
          .           .           V
          .           .           V
129       .           .        24.2
          .           .           .
          .           .           .
135       .           .           .         26A
          .           .           .           .
          .           .           .           .
141       .           .        26.1............
          .           .           .
          .           .           .
146       .           .           .-------->    26.3
144       .           .        26.2
          .           .           V
          .           .           V
149       .           .       21.05
          .           .           V
          .           .           V
155       .           .       21.1A
```

```
              .          .          .
              .          .          .
  163         .          .          .          .<-------    26.3
  161         .          .          .       26.4
              .          .          .          V
              .          .          .          V
  164         .          .          .       26.5
              .          .          .          .
              .          .          .          .
  170         .          .          .          .        26B
              .          .          .          .          .
              .          .          .          .          .
  176         .          .          .      26B.1...........
              .          .          .          .
              .          .          .          .
  179       21.2.................................
```

(***) RUNOFF ALSO COMPUTED AT THIS LOCATION

```
1****************************************
*                                      *
*   FLOOD HYDROGRAPH PACKAGE  (HEC-1)  *
*            SEPTEMBER 1990            *
*             VERSION 4.0              *
*                                      *
*  RUN DATE  03/01/1994  TIME  17:43:50 *
*                                      *
****************************************
```

```
****************************************
*                                      *
*   U.S. ARMY CORPS OF ENGINEERS       *
*   HYDROLOGIC ENGINEERING CENTER      *
*         609 SECOND STREET            *
*      DAVIS, CALIFORNIA 95616         *
*          (916) 756-1104              *
*                                      *
****************************************
```

NORTH SCOTTSDALE FLOOD INSURANCE STUDY, EXISTING CONDITIONS
1992 MODELING REVISIONS BASED ON REATA PASS SENSITIVITY ANALYSIS
MODEL FAN4.6I2 -- SUB-BASINS 15 THROUGH 21, & 22, 23, 24, 25N, & 25S
100-YEAR, 6-HOUR STORM, USING HEC-1 HYPOTHETICAL DISTRIBUTION
RAINFALL FROM NOAA ATLAS

```
  7 IO        OUTPUT CONTROL VARIABLES
                    IPRNT          5  PRINT CONTROL
                    IPLOT          0  PLOT CONTROL
                    QSCAL         0.  HYDROGRAPH PLOT SCALE

    IT        HYDROGRAPH TIME DATA
                     NMIN          5  MINUTES IN COMPUTATION INTERVAL
                    IDATE     6JAN92  STARTING DATE
                    ITIME       0000  STARTING TIME
                       NQ        100  NUMBER OF HYDROGRAPH ORDINATES
                   NDDATE     6JAN92  ENDING DATE
                   NDTIME       0815  ENDING TIME
                    ICENT         19  CENTURY MARK

              COMPUTATION INTERVAL     .08 HOURS
                   TOTAL TIME BASE    8.25 HOURS

        ENGLISH UNITS
            DRAINAGE AREA         SQUARE MILES
            PRECIPITATION DEPTH   INCHES
            LENGTH, ELEVATION     FEET
            FLOW                  CUBIC FEET PER SECOND
```

STORAGE VOLUME ACRE-FEET
SURFACE AREA ACRES
TEMPERATURE DEGREES FAHRENHEIT

RUNOFF SUMMARY
FLOW IN CUBIC FEET PER SECOND
TIME IN HOURS, AREA IN SQUARE MILES

	OPERATION	STATION	PEAK FLOW	TIME OF PEAK	AVERAGE FLOW FOR MAXIMUM PERIOD 6-HOUR	24-HOUR	72-HOUR	BASIN AREA	MAXIMUM STAGE	TIME OF MAX STAGE
	HYDROGRAPH AT	SUB16	2494.	3.33	297.	216.	216.	1.46		
	HYDROGRAPH AT	SUB17	2041.	3.33	241.	175.	175.	1.19		
	HYDROGRAPH AT	SUB18	2277.	3.25	257.	187.	187.	1.26		
	3 COMBINED AT	CP19A	6661.	3.33	795.	578.	578.	3.91		
	ROUTED TO	CP19B	6737.	3.33	795.	578.	578.	3.91	6.85	3.33
	HYDROGRAPH AT	SUB15	1760.	3.42	266.	194.	194.	1.37		
	2 COMBINED AT	CP19C	8249.	3.33	1061.	772.	772.	5.28		
+	ROUTED TO	19.1	7963.	3.42	1060.	771.	771.	5.28	5.92	3.42
	HYDROGRAPH AT	SUB19	428.	3.25	40.	29.	29.	.19		
	HYDROGRAPH AT	SUB20	1026.	3.25	121.	88.	88.	.57		
+	3 COMBINED AT	CP21	8995.	3.42	1220.	888.	888.	6.03		
+	ROUTED TO	21.1	5452.	4.42	1181.	859.	859.	6.03	4.16	4.42
	HYDROGRAPH AT	SUB21	2555.	4.00	646.	470.	470.	3.67		
+	HYDROGRAPH AT	SUB22	2855.	3.25	296.	215.	215.	1.39		
+	HYDROGRAPH AT	SUB23	775.	3.25	84.	61.	61.	.39		

	2 COMBINED AT								
+		CP24	3629.	3.25	379.	276.	276.	1.78	
	ROUTED TO								
+		24.1	2885.	3.42	378.	275.	275.	1.78	
									5.56 3.42
	HYDROGRAPH AT								
+		SUB24	665.	3.33	77.	56.	56.	.49	
	2 COMBINED AT								
+		24.05	3423.	3.42	455.	331.	331.	2.27	
	HYDROGRAPH AT								
+		25N	1210.	3.42	165.	120.	120.	.78	
	HYDROGRAPH AT								
+		25S	1360.	3.25	140.	102.	102.	.63	
	3 COMBINED AT								
+		24.1	5534.	3.42	760.	553.	553.	3.68	
	ROUTED TO								
		24.2	5296.	3.50	759.	552.	552.	3.68	
+									5.49 3.50
	HYDROGRAPH AT								
+		26A	262.	3.25	26.	19.	19.	.16	
	2 COMBINED AT								
		26.1	5433.	3.42	785.	571.	571.	3.84	
	DIVERSION TO								
		26.3	2717.	3.42	392.	285.	285.	3.84	
	HYDROGRAPH AT								
		26.2	2717.	3.42	392.	285.	285.	3.84	
	ROUTED TO								
		21.05	2724.	3.50	391.	284.	284.	3.84	
									3.42 3.50
	ROUTED TO								
		21.1A	2599.	3.83	387.	282.	282.	3.84	
+									3.21 3.83
	HYDROGRAPH AT								
		26.4	2717.	3.42	392.	285.	285.	.00	
	ROUTED TO								
		26.5	2640.	3.58	388.	282.	282.	.00	
+									4.86 3.58
	HYDROGRAPH AT								
+		26B	196.	3.67	36.	26.	26.	.27	
	2 COMBINED AT								
		26B.1	2828.	3.58	424.	308.	308.	.27	
	4 COMBINED AT								

21.2 8541. 4.25 2639. 1919. 1919. 13.81

1

SUMMARY OF KINEMATIC WAVE - MUSKINGUM-CUNGE ROUTING
(FLOW IS DIRECT RUNOFF WITHOUT BASE FLOW)

ISTAQ	ELEMENT	DT (MIN)	PEAK (CFS)	TIME TO PEAK (MIN)	VOLUME (IN)	INTERPOLATED TO COMPUTATION INTERVAL DT (MIN)	PEAK (CFS)	TIME TO PEAK (MIN)	VOLUME (IN)
SUB16	MANE	2.85	2577.21	198.71	1.89	5.00	2494.15	200.00	1.89

CONTINUITY SUMMARY (AC-FT) - INFLOW= .0000E+00 EXCESS= .1494E+03 OUTFLOW= .1472E+03 BASIN STORAGE= .1086E+01 PERCENT ERROR= .7

SUB17	MANE	2.85	2086.55	197.12	1.89	5.00	2040.88	200.00	1.89

CONTINUITY SUMMARY (AC-FT) - INFLOW= .0000E+00 EXCESS= .1215E+03 OUTFLOW= .1195E+03 BASIN STORAGE= .1099E+01 PERCENT ERROR= .7

SUB18	MANE	3.20	2315.93	195.27	1.89	5.00	2277.43	195.00	1.89

CONTINUITY SUMMARY (AC-FT) - INFLOW= .0000E+00 EXCESS= .1296E+03 OUTFLOW= .1276E+03 BASIN STORAGE= .1043E+01 PERCENT ERROR= .8

SUB15	MANE	3.10	1820.38	206.69	1.81	5.00	1760.00	205.00	1.81

CONTINUITY SUMMARY (AC-FT) - INFLOW= .0000E+00 EXCESS= .1348E+03 OUTFLOW= .1322E+03 BASIN STORAGE= .1776E+01 PERCENT ERROR= .6

SUB19	MANE	1.78	428.36	193.36	1.98	5.00	427.93	195.00	1.98

CONTINUITY SUMMARY (AC-FT) - INFLOW= .0000E+00 EXCESS= .1998E+02 OUTFLOW= .1979E+02 BASIN STORAGE= .8758E-01 PERCENT ERROR= .5

SUB20	MANE	3.88	1093.81	196.75	1.97	5.00	1026.19	195.00	1.97

CONTINUITY SUMMARY (AC-FT) - INFLOW= .0000E+00 EXCESS= .6082E+02 OUTFLOW= .5993E+02 BASIN STORAGE= .3813E+00 PERCENT ERROR= .8

SUB21	MANE	4.25	2563.83	236.57	1.64	5.00	2555.29	240.00	1.64

CONTINUITY SUMMARY (AC-FT) - INFLOW= .0000E+00 EXCESS= .3317E+03 OUTFLOW= .3210E+03 BASIN STORAGE= .8677E+01 PERCENT ERROR= .6

SUB22	MANE	2.78	2899.27	195.38	1.98	5.00	2854.64	195.00	1.98

CONTINUITY SUMMARY (AC-FT) - INFLOW= .0000E+00 EXCESS= .1482E+03 OUTFLOW= .1464E+03 BASIN STORAGE= .8886E+00 PERCENT ERROR= .6

SUB23	MANE	2.38	802.15	195.79	1.98	5.00	774.69	195.00	1.98

```
CONTINUITY SUMMARY (AC-FT) - INFLOW= .0000E+00 EXCESS= .4218E+02 OUTFLOW= .4169E+02 BASIN STORAGE= .2674E+00 PERCENT ERROR=    .5

            SUB24  MANE        2.22    691.79    197.84      1.47      5.00    664.81    200.00        1.46

CONTINUITY SUMMARY (AC-FT) - INFLOW= .0000E+00 EXCESS= .3899E+02 OUTFLOW= .3836E+02 BASIN STORAGE= .3428E+00 PERCENT ERROR=    .7

              25N  MANE        3.58   1228.04    202.87      1.95      5.00   1210.01    205.00        1.95

CONTINUITY SUMMARY (AC-FT) - INFLOW= .0000E+00 EXCESS= .8352E+02 OUTFLOW= .8167E+02 BASIN STORAGE= .1113E+01 PERCENT ERROR=    .9

              25S  MANE        3.01   1378.90    196.15      2.09      5.00   1360.14    195.00        2.09

CONTINUITY SUMMARY (AC-FT) - INFLOW= .0000E+00 EXCESS= .7073E+02 OUTFLOW= .6965E+02 BASIN STORAGE= .5362E+00 PERCENT ERROR=    .8

              26A  MANE        1.20    277.36    192.98      1.50      5.00    262.29    195.00        1.50

CONTINUITY SUMMARY (AC-FT) - INFLOW= .0000E+00 EXCESS= .1303E+02 OUTFLOW= .1288E+02 BASIN STORAGE= .7843E-01 PERCENT ERROR=    .6

              26B  MANE        3.58    197.61    217.71      1.22      5.00    195.77    220.00        1.22

CONTINUITY SUMMARY (AC-FT) - INFLOW= .0000E+00 EXCESS= .1834E+02 OUTFLOW= .1780E+02 BASIN STORAGE= .3785E+00 PERCENT ERROR=    .9


*** NORMAL END OF HEC-1 ***
```

RAW4EX - GRSCEX

```
****************************************
*                                      *
*   FLOOD HYDROGRAPH PACKAGE  (HEC-1)  *
*            SEPTEMBER 1990            *
*             VERSION 4.0              *
*                                      *
*  RUN DATE  06/30/1994  TIME  10:25:55 *
*                                      *
****************************************
```

```
****************************************
*                                      *
*    U.S. ARMY CORPS OF ENGINEERS      *
*    HYDROLOGIC ENGINEERING CENTER     *
*          609 SECOND STREET           *
*       DAVIS, CALIFORNIA 95616        *
*           (916) 756-1104             *
*                                      *
****************************************
```

```
X     X  XXXXXXX   XXXXX          X
X     X  X        X     X        XX
X     X  X        X              X
XXXXXXX  XXXX     X        XXXXX  X
X     X  X        X              X
X     X  X        X     X        X
X     X  XXXXXXX   XXXXX         XXX
```

THIS PROGRAM REPLACES ALL PREVIOUS VERSIONS OF HEC-1 KNOWN AS HEC1 (JAN 73), HEC1GS, HEC1DB, AND HEC1KW.

THE DEFINITIONS OF VARIABLES -RTIMP- AND -RTIOR- HAVE CHANGED FROM THOSE USED WITH THE 1973-STYLE INPUT STRUCTURE.
THE DEFINITION OF -AMSKK- ON RM-CARD WAS CHANGED WITH REVISIONS DATED 28 SEP 81. THIS IS THE FORTRAN77 VERSION
NEW OPTIONS: DAMBREAK OUTFLOW SUBMERGENCE , SINGLE EVENT DAMAGE CALCULATION, DSS:WRITE STAGE FREQUENCY,
DSS:READ TIME SERIES AT DESIRED CALCULATION INTERVAL LOSS RATE:GREEN AND AMPT INFILTRATION
KINEMATIC WAVE: NEW FINITE DIFFERENCE ALGORITHM

HEC-1 INPUT PAGE 1

```
LINE          ID.......1.......2.......3.......4.......5.......6.......7.......8.......9......10

  1           ID        NORTH SCOTTSDALE FLOOD INSURANCE STUDY, EXISTING CONDITIONS
  2           ID        1992 MODELING REVISIONS BASED ON REATA PASS SENSITIVITY ANALYSIS
  3           ID        MODEL RAW4EX -- SUB-BASINS 15 THROUGH 21, & 22, 23, 24, 25N, & 25S
  4           ID        100-YEAR, 6-HOUR STORM, USING HEC-1 HYPOTHETICAL DISTRIBUTION
  5           ID        RAINFALL FROM NOAA ATLAS
  6           ID        20,500' ROUTING GEOMETRY CORRECTION THROUGH D.A. 21
  7           ID
  8           ID        SUB-BASIN 21 SUBDIVIDED PER CJL
  9           ID
 10           ID        REVISED BY GREINER 2-7-94 BY BILL LACE
 11           ID        REVISED BY C. J. LOVELY, COS, 3-2-94
 12           ID
 13           ID        ****************************************************************
 14           ID        * ROUTING REACHES AND CP'S ADDED WITHIN SUB AREA 21 TO REFLECT IN *
 15           ID        * MORE DETAIL AND ACTUAL DRAINAGE AND CHANNEL REACH CONDITIONS    *
 16           ID        ****************************************************************
 17           ID
              *DIAGRAM
 18           IT       3 03JAN94       0     300
 19           IO       5       0

 20           KK   SUB16
```

```
21          KM        RUNOFF FROM SUB-BASIN 16
22          BA  1.4570
23          PH            9.70     .77    1.51    2.65    3.00    3.23    3.66
24          LS              83
25          UK     217   .0581     .20     100
26          RK   14800   .0216    .045            TRAP      25       3

27          KK   SUB17
28          KM        RUNOFF FROM SUB-BASIN 17
29          BA  1.1851
30          LS              83
31          UK     285   .0421     .20     100
32          RK   12200   .0254    .045            TRAP      25       3

33          KK   SUB18
34          KM        RUNOFF FROM SUB-BASIN 18
35          BA  1.2641
36          LS              83
37          UK     285   .0421     .20     100
38          RK   10840   .0259    .045            TRAP      25       3

39          KK   CP19A
40          KM        COMBINE HYDROGRAPHS SUB16, SUB17, & SUB18
41          HC       3

42          KK   CP19B
43          KM        ROUTE CP19A TO CP19B
44          RS       1    FLOW      -1
45          RC    .055    .040    .055    1100   .0155
46          RX       0       1     126     132     167     173     298     299
47          RY      10       8       3       0       0       3       8      10
                                          HEC-1 INPUT                                                    PAGE  2

LINE        ID.......1.......2.......3.......4.......5.......6.......7.......8.......9......10


48          KK   SUB15
49          KM        RUNOFF FROM SUB-BASIN 15
50          BA  1.3702
51          LS              82
52          UK     217   .0581     .20     100
53          RK   21200   .0236    .045            TRAP      25       3

54          KK   CP19C
55          KM        COMBINE HYDROGRAPHS SUB15 & CP19B
56          HC       2

57          KK    19.1      CP
58          KM        ROUTE CP 19C TO CP 19.1
59          RS       1    FLOW      -1
60          RC    .055    .040    .055    1800   .0200
61          RX       0       1     151     166     216     231     381     382
62          RY      10       9       3       0       0       3       9      10

63          KK   SUB19
64          KM        RUNOFF FROM SUB-BASIN 19
65          BA   .1872
66          LS              84
67          UK     275   .0800     .20     100
68          RK    3730   .0352    .045    .160    TRAP      15       3
```

```
 69          RK    1800   .0200    .045            TRAP      50      30

 70          KK   SUB20
 71          KM        RUNOFF FROM SUB-BASIN 20
 72          BA   .5698
 73          LS              84
 74          UK     300   .0750     .20     100
 75          RK    9640   .0197    .045            TRAP      15       3

 76          KK    CP21
 77          KM        COMBINE SUB 19, SUB 20, & CP 19.1
 78          HC       3
 79          KM        *********BEGIN SUBAREA 21 BREAKDOWN 3/94 REVISIONS********

 80          KK  RRCP20      CP
 81          KM
 82          KM        ROUTE CP20 TO CP 21A, WHICH IS 4600'
 83          KM
 84          RS       1    FLOW      -1       0       0
 85          RC    .055    .040    .055    4600   .0217
 86          RX       0      30      60      85     195     220     250     280
 87          RY      10       4       1       0       0       1       4      10

 88          KK     21A     SUB
 89          KM
 90          KM        RUNOFF FROM SUB-BASIN 21A
 91          KM
 92          BA     .42
 93          LS       0      80
 94          UK     297   .0558      .2     100
```



```
LINE         ID.......1.......2.......3.......4.......5.......6.......7.......8.......9......10

 95          RK    6400   .0344    .045       0    TRAP      10       3

 96          KK   CP21A
 97          HC       2

 98          KK   RR21A      CP
 99          KM
100          KM        ROUTE CP21A TO 21B WHICH IS 960'
101          KM
102          RS       1    FLOW      -1
103          RC    .055     .04    .055     960   .0156
104          RX       0      10      60     205     295     440     490     500
105          RY       6       4       2       0       0       2       4       6

106          KK     21B     SUB
107          KM
108          KM        RUNOFF FROM SUB-BASIN 21B
109          KM
110          BA   0.276
111          LS       0      80
112          UK     297   .0558      .2     100
113          RK    6300   .0381    .045       0    TRAP      10       3

114          KK   CP21B
115          HC       2
```

```
116          KK   RR21B      CP
117          KM
118          KM        ROUTE CP21B TO 21C WHICH IS 4400
119          KM
120          RS       1    FLOW      -1
121          RC    .055     .04    .055    4400   .0205
122          RX       0      10      60     205     295     440     490     500
123          RY       6       4       2       0       0       2       4       6

124          KK     21C     SUB
125          KM
126          KM        RUNOFF FROM SUB-BASIN 21C
127          KM
128          BA    .748
129          LS       0      80
130          UK     297   .0558      .2     100
131          RK    9900   .0328    .045       0    TRAP      20       3

132          KK   CP21C
133          HC       2

134          KK   RR21C      CP
135          KM
136          KM        ROUTE CP21C TO 21D WHICH IS 5700'
137          KM
138          RS       1    FLOW      -1
139          RC    .055    .040    .055    5700   .0181
140          RX       0      20     175     210     300     335     490     510
141          RY     5.5     3.5     2.5       0       0     2.5     3.5     5.5
                                          HEC-1 INPUT                                          PAGE  4

LINE         ID.......1.......2.......3.......4.......5.......6.......7.......8.......9......10


142          KK     21D     SUB
143          KM
144          KM        RUNOFF FROM SUB-BASIN 21D
145          KM
146          BA   1.059
147          LS       0      80
148          UK     297   .0558      .2     100
149          RK   14500   .0252    .045       0    TRAP      30       3

150          KK   CP21D
151          HC       2

152          KK   RR21D      CP
153          KM
154          KM        ROUTE CP21D TO 21E WHICH IS 1100'
155          KM
156          RS       1    FLOW      -1
157          RC    .055    .040    .055    1100     .02
158          RX       0      20     175     210     300     335     490     510
159          RY     5.5     3.5     2.5       0       0     2.5     3.5     5.5

160          KK     21E     SUB
161          KM
162          KM        RUNOFF FROM SUB-BASIN 21E
163          KM
164          BA   0.257
```

```
165          LS       0      80
166          UK     297   .0333      .2     100
167          RK    6600   .0288    .045       0    TRAP      15       3

168          KK   CP21E
169          HC       2

170          KK   RR21E      CP
171          KM
172          KM        ROUTE CP21E TO 21F WHICH IS 2800'
173          KM
174          RS       1    FLOW      -1
175          RC    .055    .040    .055    2800   .0143
176          RX       0      70     170     180     230     240     340     410
177          RY    10.5     4.5     3.5       0       0     3.5     4.5    10.5

178          KK     21F     SUB
179          KM
180          KM        RUNOFF FROM SUB-BASIN 21F
181          KM
182          BA   0.469
183          LS       0      80
184          UK     297   .0333      .2     100
185          RK   10400   .0279    .045       0    TRAP      20       3
1                                          HEC-1 INPUT                                                    PAGE  5

LINE         ID.......1.......2.......3.......4.......5.......6.......7.......8.......9......10


186          KK   CP21F
187          HC       2

188          KK   RR21F      CP
189          KM
190          KM        ROUTE CP21F TO 21G WHICH IS 1900'
191          KM
192          RS       1    FLOW      -1
193          RC    .055    .040    .055    1900   .0158
194          RX       0      20      70     345     455     730     780     800
195          RY      10       8       2       0       0       2       8      10

196          KK     21G     SUB
197          KM
198          KM        RUNOFF FROM SUB-BASIN 21G
199          KM
200          BA   .0172
201          LS       0      80
202          UK     297   .0333      .2     100
203          RK    4000     .03    .045       0    TRAP      10       3

204          KK   CP21G
205          HC       2

206          KK   SUB22
207          KM        RUNOFF FROM SUB-BASIN 22
208          BA  1.3860
209          PH            2.27     .76    1.49    2.61    2.95    3.18    3.60
210          LS              84
211          UK     225   .0590     .20     100
212          RK   13000   .0238    .045            TRAP      25       3
```

```
213          KK   SUB23
214          KM        RUNOFF FROM SUB-BASIN 23
215          BA   .3945
216          LS              84
217          UK     225   .0590     .20     100
218          RK   10200   .0304    .045            TRAP      20       3

219          KK    CP24
220          KM        COMBINE HYDROGRAPHS SUB22 & SUB23
221          HC       2

222          KK    24.1       CP
223          KM        ROUTE CP 24 TO CP 24.1
224          RS       3    FLOW      -1
225          RC    .055    .040    .055    6800   .0257
226          RX       0       1     101     107     122     128     228     229
227          RY      10       8       3       0       0       3       8      10
```



```
LINE         ID.......1.......2.......3.......4.......5.......6.......7.......8.......9......10

228          KK   SUB24
229          KM        RUNOFF FROM SUB-BASIN 24
230          KM        DRAINAGE AREA CHANGED TO MATCH VALUE USED BY MICHAEL BAKER Jr., INC.
231          BA   .4907
232          LS              77
233          UK     295   .0438     .20     100
234          RK    6800   .0257    .045            TRAP      15       3

235          KK   24.05       CP
236          KM        COMBINE SUB-BASINS 22-24 APEX
237          HC       2

238          KK     25N      SUB
239          KM        RUNOFF FROM SUB-BASIN 25N APEX
240          BA   .7834
241          PH              .78     .75    1.48    2.59    2.93    3.15    3.58
242          LS              84
243          UK     295   .0438     .20     100
244          RK   16700   .0302    .045            TRAP      25       3

245          KK     25S      SUB
246          KM        RUNOFF FROM SUB-BASIN 25S APEX
247          BA   .6256
248          PH              .63     .75    1.47    2.57    2.90    3.12    3.53
249          LS              86
250          UK     295   .0438     .20     100
251          RK    8900   .0278    .045            TRAP      25       3

252          KK    24.1       CP
253          KM        COMBINE HYDROGRAPHS CP24.1 & SUB24 & SUB25N & SUB25S
254          HC       3

255          KK    24.2       CP
256          KM        ROUTE HYDROGRAPH CP24.1 TO CP24.2
257          RS       1    FLOW      -1
258          RC    .055    .040    .055    2700   .0155
259          RX       0       1      21      33      83      95     195     205
```

Why Baker Jr. Inc

```
260          RY      10       8       3       0       0       3       8      10

261          KK     26A     SUB
262          KM        RUNOFF FROM SUB-BASIN 26A
263          BA   .1612
264          LS              78
265          UK     200    .025      .2     100
266          RK    1400   .0217    .045            TRAP      60       7

267          KK    26.1      CP
268          KM        COMBINE SUB 26A AND CP 24.2
269          HC       2
```



```
LINE         ID.......1.......2.......3.......4.......5.......6.......7.......8.......9......10

270          KK    26.2     DIV
271          KM        DIVERT FLOW FROM CP26.1 TO SUB26B
272          DT    26.3
273          DI       0     500    1000   10000
274          DQ       0     250     500    5000

275          KK   21.05       C
276          KM        ROUTE DIV26.2 TO 21.05 - CONFLUENCE
277          RS       4    FLOW      -1
278          RC    .055    .040    .055    3900   .0269
279          RX       0       1      21      33      83      95     195     205
280          RY      10       8       3       0       0       3       8      10

281          KK   CP21G      CP
282          HC       2

283          KK  R21.05      CP
284          KM
285          KM        ROUTE CP21G (21.05) TO CP21H 3100'
286          KM
287          RS       1    FLOW      -1
288          RC    .055     .04    .055    3100   .0194
289          RX       0      90     120     355     585     820     850     940
290          RY       9       4     1.5       0       0     1.5       4       9

291          KK     21H     SUB
292          KM
293          KM        RUNOFF FROM SUB-BASIN 21H
294          KM
295          BA   .0431
296          LS       0      80
297          UK     297   .0333      .2     100
298          RK    4600   .0278    .045       0    TRAP      20       3

299          KK   CP21H JOMAXRD
300          HC       2

301          KK   RR21H      CP
302          KM
303          KM        ROUTE TO APEX
304          KM
305          RS       1    FLOW      -1
306          RC    .055    .040    .055    2390   .0222
```

```
307          RX      0      90     120     355     585     820     850     940
308          RY      9       4     1.5       0       0     1.5       4       9

309          KK   26.4     RET
310          KM        RETRIEVE DIVERTED FLOW FROM CP26.1
311          DR   26.3
```



```
LINE         ID.......1.......2.......3.......4.......5.......6.......7.......8.......9......10


312          KK   26.5     RET
313          KM        ROUTE DIVERTED FLOW FROM RET 26.4 TO SUB26B
314          RS      3    FLOW      -1
315          RC   .055     .04    .055   10000    .025
316          RX      0       1       3      15      35      47      49      50
317          RY     10       8       3       0       0       3       8      10

318          KK    26B     SUB
319          KM        RUNOFF FROM SUB26B
320          BA  .6502
321          LS             74
322          UK    200    .025      .2     100
323          RK  11000   .0263    .045            TRAP      35      10

324          KK  26B.1      CP
325          KM        COMBINE SUB26B AND RET26.5
326          HC      2

327          KK   APEX      CP
328          KM        COMBINE HYDROGRAPHS CP21.1 & SUB21 & C21.1A & CP26B.1 - APEX
329          HC      2

330          KK  CP27A      CP AT HAPPY VALLEY ROAD
331          KM
332          KM        ROUTE FLOW FROM CONCENTRATION POINT APEX TO 27A (HAPPY VALLEY
333          KM        ROAD).  THERE IS NO CONTRIBUTING AREA AT THIS CONCENTRATION PT.
334          KM
335          RS      1    FLOW      -1       0       0
336          RC   .055    .040    .055    1600   .0196       0       0       0
337          RX      0       1     201     211     261     271     471     472
338          RY     10       4       2       0       0       2       4      10

339          KK  CP27D      CP AT SCOTTSDALE ROAD
340          KM        ROUTE FLOW FROM CONCENTRATION POINT CP27A TO 27D (SCOTTSDALE ROAD)
341          KM
342          RS      1    FLOW      -1       0       0
343          RC   .055    .040    .055    7600   .0196       0       0       0
344          RX      0       1     201     211     261     271     471     472
345          RY     10       4       2       0       0       2       4      10

346          KK     27     SUB
347          KM
348          KM        RUNOFF FROM SUB-BASIN 27
349          KM
350          BA  1.1913       0       0
351          LS      0      75       0       0
352          UK    200   .0250     .20     100       0       0       0
353          RK   1500   .0263    .045       0    TRAP      35      10
```

0.2736 original submittal

New addition

```
LINE          ID.......1.......2.......3.......4.......5.......6.......7.......8.......9......10


 354          KK    CP27      CP AT SCOTTSDALE ROAD
 355          KM
 356          KM        COMBINE TOTAL HYDROGRAPH FROM CONCENTRATION
 357          KM        POINT 27D WITH SUB 27.  TOTAL FLOW AT
 358          KM        SCOTTSDALE ROAD.
 359          KM
 360          HC       2
 361          ZZ
1
              SCHEMATIC DIAGRAM OF STREAM NETWORK
INPUT
 LINE     (V) ROUTING          (--->) DIVERSION OR PUMP FLOW

  NO.     (.) CONNECTOR        (<---) RETURN OF DIVERTED OR PUMPED FLOW

   20      SUB16
              .
              .
   27         .       SUB17
              .           .
              .           .
   33         .           .       SUB18
              .           .           .
              .           .           .
   39      CP19A.......................
              V
              V
   42      CP19B
              .
              .
   48         .       SUB15
              .           .
              .           .
   54      CP19C............
              V
              V
   57       19.1
              .
              .
   63         .       SUB19
              .           .
              .           .
   70         .           .       SUB20
              .           .           .
              .           .           .
   76       CP21........................
              V
              V
   80     RRCP20
              .
              .
   88         .         21A
              .           .
              .           .
   96      CP21A............
              V
```

```
            V
 98      RR21A
            .
            .
106         .          21B
            .            .
            .            .
114     CP21B............
            V
            V
116     RR21B
            .
            .
124         .          21C
            .            .
            .            .
132     CP21C............
            V
            V
134     RR21C
            .
            .
142         .          21D
            .            .
            .            .
150     CP21D............
            V
            V
152     RR21D
            .
            .
160         .          21E
            .            .
            .            .
168     CP21E............
            V
            V
170     RR21E
            .
            .
178         .          21F
            .            .
            .            .
186     CP21F............
            V
            V
188     RR21F
            .
            .
196         .          21G
            .            .
            .            .
204     CP21G............
            .
            .
206         .        SUB22
            .            .
            .            .
213         .            .        SUB23
            .            .            .
```

```
          .          .          .
219       .       CP24............
          .          V
          .          V
222       .       24.1
          .          .
          .          .
228       .          .      SUB24
          .          .          .
          .          .          .
235       .      24.05...........
          .          .
          .          .
238       .          .        25N
          .          .          .
          .          .          .
245       .          .          .        25S
          .          .          .          .
          .          .          .          .
252       .       24.1......................
          .          V
          .          V
255       .       24.2
          .          .
          .          .
261       .          .        26A
          .          .          .
          .          .          .
267       .       26.1............
          .          .
          .          .
272       .          .------->    26.3
270       .       26.2
          .          V
          .          V
275       .      21.05
          .          .
          .          .
281     CP21G...........
          V
          V
283    R21.05
          .
          .
291       .        21H
          .          .
          .          .
299     CP21H...........
          V
          V
301     RR21H
          .
          .
311       .          .<-------    26.3
309       .       26.4
          .          V
          .          V
312       .       26.5
          .          .
          .          .
```

```
318          .          .        26B
             .          .          .
             .          .          .
324          .      26B.1...........
             .          .
             .          .
327       APEX...........
             V
             V
330      CP27A
             V
             V
339      CP27D
             .
             .
346          .         27
             .          .
             .          .
354       CP27...........
```

(***) RUNOFF ALSO COMPUTED AT THIS LOCATION

```
****************************************
*                                      *
*   FLOOD HYDROGRAPH PACKAGE  (HEC-1)  *
*            SEPTEMBER 1990            *
*             VERSION 4.0              *
*                                      *
*  RUN DATE  06/30/1994  TIME  10:25:55 *
*                                      *
****************************************
```

```
****************************************
*                                      *
*    U.S. ARMY CORPS OF ENGINEERS      *
*    HYDROLOGIC ENGINEERING CENTER     *
*          609 SECOND STREET           *
*       DAVIS, CALIFORNIA 95616        *
*           (916) 756-1104             *
*                                      *
****************************************
```

NORTH SCOTTSDALE FLOOD INSURANCE STUDY, EXISTING CONDITIONS
1992 MODELING REVISIONS BASED ON REATA PASS SENSITIVITY ANALYSIS
MODEL RAW4EX -- SUB-BASINS 15 THROUGH 21, & 22, 23, 24, 25N, & 25S
100-YEAR, 6-HOUR STORM, USING HEC-1 HYPOTHETICAL DISTRIBUTION
RAINFALL FROM NOAA ATLAS
20,500' ROUTING GEOMETRY CORRECTION THROUGH D.A. 21

SUB-BASIN 21 SUBDIVIDED PER CJL

REVISED BY GREINER 2-7-94 BY BILL LACE
REVISED BY C. J. LOVELY, COS, 3-2-94

```
*******************************************************************
* ROUTING REACHES AND CP'S ADDED WITHIN SUB AREA 21 TO REFLECT IN *
* MORE DETAIL AND ACTUAL DRAINAGE AND CHANNEL REACH CONDITIONS    *
*******************************************************************
```

```
 19 IO          OUTPUT CONTROL VARIABLES
                      IPRNT          5  PRINT CONTROL
                      IPLOT          0  PLOT CONTROL
                      QSCAL         0.  HYDROGRAPH PLOT SCALE

    IT          HYDROGRAPH TIME DATA
                       NMIN          3  MINUTES IN COMPUTATION INTERVAL
```

IDATE	3JAN94	STARTING DATE
ITIME	0000	STARTING TIME
NQ	300	NUMBER OF HYDROGRAPH ORDINATES
NDDATE	3JAN94	ENDING DATE
NDTIME	1457	ENDING TIME
ICENT	19	CENTURY MARK

COMPUTATION INTERVAL .05 HOURS
TOTAL TIME BASE 14.95 HOURS

ENGLISH UNITS

DRAINAGE AREA	SQUARE MILES
PRECIPITATION DEPTH	INCHES
LENGTH, ELEVATION	FEET
FLOW	CUBIC FEET PER SECOND
STORAGE VOLUME	ACRE-FEET
SURFACE AREA	ACRES
TEMPERATURE	DEGREES FAHRENHEIT

RUNOFF SUMMARY
FLOW IN CUBIC FEET PER SECOND
TIME IN HOURS, AREA IN SQUARE MILES

OPERATION	STATION	PEAK FLOW	TIME OF PEAK	AVERAGE FLOW FOR MAXIMUM PERIOD 6-HOUR	24-HOUR	72-HOUR	BASIN AREA	MAXIMUM STAGE	TIME OF MAX STAGE
HYDROGRAPH AT	SUB16	2470.	3.30	297.	120.	120.	1.46		
HYDROGRAPH AT	SUB17	2046.	3.30	241.	97.	97.	1.19		
HYDROGRAPH AT	SUB18	2302.	3.25	258.	104.	104.	1.26		
3 COMBINED AT	CP19A	6753.	3.30	796.	322.	322.	3.91		
ROUTED TO									
+	CP19B	6600.	3.30	796.	322.	322.	3.91		
								6.80	3.30
HYDROGRAPH AT	SUB15	1805.	3.45	268.	108.	108.	1.37		
2 COMBINED AT	CP19C	8076.	3.35	1064.	430.	430.	5.28		
ROUTED TO									
+	19.1	7881.	3.35	1064.	430.	430.	5.28		
								5.90	3.35
HYDROGRAPH AT	SUB19	413.	3.25	40.	16.	16.	.19		
HYDROGRAPH AT									
+	SUB20	1085.	3.25	121.	49.	49.	.57		
3 COMBINED AT									

	CP21	9111.	3.35	1225.	495.	495.	6.03	
ROUTED TO								
	RRCP20	8363.	3.45	1223.	495.	495.	6.03	
								3.89 3.45
HYDROGRAPH AT								
	21A	725.	3.25	76.	31.	31.	.42	
2 COMBINED AT								
	CP21A	8759.	3.45	1298.	526.	526.	6.45	
ROUTED TO								
	RR21A	8715.	3.45	1298.	526.	526.	6.45	
								3.34 3.45
HYDROGRAPH AT								
	21B	468.	3.25	50.	20.	20.	.28	
2 COMBINED AT								
	CP21B	8982.	3.45	1347.	546.	546.	6.73	
ROUTED TO								
	RR21B	7992.	3.55	1342.	546.	546.	6.73	
								3.03 3.55
HYDROGRAPH AT								
	21C	1158.	3.30	135.	54.	54.	.75	
2 COMBINED AT								
	CP21C	8598.	3.55	1475.	600.	600.	7.48	
ROUTED TO								
	RR21C	7129.	3.75	1468.	600.	600.	7.48	
								3.93 3.75
HYDROGRAPH AT								
	21D	1372.	3.40	190.	77.	77.	1.06	
2 COMBINED AT								
	CP21D	7777.	3.70	1656.	677.	677.	8.54	
ROUTED TO								
	RR21D	7623.	3.80	1655.	676.	676.	8.54	
								3.92 3.80
HYDROGRAPH AT								
	21E	378.	3.30	46.	19.	19.	.26	
2 COMBINED AT								
	CP21E	7742.	3.80	1701.	695.	695.	8.79	
ROUTED TO								
	RR21E	7565.	3.85	1698.	695.	695.	8.79	
								6.07 3.85
HYDROGRAPH AT								
	21F	620.	3.35	84.	34.	34.	.47	
2 COMBINED AT								

+	CP21F	7786.	3.85	1780.	729.	729.	9.26		
ROUTED TO									
+	RR21F	7704.	3.90	1778.	729.	729.	9.26		
-								2.56	3.90
HYDROGRAPH AT									
-	21G	24.	3.35	3.	1.	1.	.02		
2 COMBINED AT									
.	CP21G	7711.	3.90	1781.	730.	730.	9.28		
HYDROGRAPH AT									
+	SUB22	2847.	3.25	296.	119.	119.	1.39		
HYDROGRAPH AT									
+	SUB23	789.	3.25	84.	34.	34.	.39		
2 COMBINED AT									
+	CP24	3637.	3.25	380.	153.	153.	1.78		
ROUTED TO									
+	24.1	2935.	3.45	379.	153.	153.	1.78		
+								5.59	3.45
HYDROGRAPH AT									
+	SUB24	678.	3.30	78.	31.	31.	.49		
2 COMBINED AT									
+	24.05	3431.	3.40	457.	184.	184.	2.27		
HYDROGRAPH AT									
-	25N	1223.	3.40	165.	67.	67.	.78		
HYDROGRAPH AT									
	25S	1351.	3.25	141.	57.	57.	.63		
3 COMBINED AT									
	24.1	5569.	3.40	763.	308.	308.	3.68		
ROUTED TO									
	24.2	5399.	3.45	762.	308.	308.	3.68		
.								5.54	3.45
HYDROGRAPH AT									
	26A	272.	3.20	26.	10.	10.	.16		
2 COMBINED AT									
	26.1	5527.	3.45	788.	319.	319.	3.84		
DIVERSION TO									
	26.3	2763.	3.45	394.	159.	159.	3.84		
HYDROGRAPH AT									
	26.2	2763.	3.45	394.	159.	159.	3.84		
ROUTED TO									
+	21.05	2743.	3.50	394.	159.	159.	3.84		
								3.44	3.50

2 COMBINED AT									
	CP21G	9081.	3.85	2174.	889.	889.	13.12		
ROUTED TO									
	R21.05	8907.	3.95	2167.	889.	889.	13.12		
								2.21	3.95
HYDROGRAPH AT									
	21H	59.	3.35	8.	3.	3.	.04		
2 COMBINED AT									
	CP21H	8923.	3.95	2174.	892.	892.	13.16		
ROUTED TO									
	RR21H	8850.	4.00	2169.	892.	892.	13.16		
								2.13	4.00
HYDROGRAPH AT									
	26.4	2763.	3.45	394.	159.	159.	.00		
ROUTED TO									
	26.5	2599.	3.55	393.	159.	159.	.00		
								4.83	3.55
HYDROGRAPH AT									
	26B	546.	3.50	86.	35.	35.	.65		
2 COMBINED AT									
	26B.1	3131.	3.55	478.	194.	194.	.65		
2 COMBINED AT									
	APEX	10456.	3.90	2643.	1086.	1086.	13.81		
ROUTED TO									
	CP27A	10427.	3.95	2642.	1086.	1086.	13.81		
								5.13	3.95
ROUTED TO									
	CP27D	9291.	4.20	2629.	1086.	1086.	13.81		
								4.93	4.20
HYDROGRAPH AT									
	27	1663.	3.20	167.	67.	67.	1.19		
2 COMBINED AT									
	CP27	9458.	4.20	2777.	1153.	1153.	15.01		

1

SUMMARY OF KINEMATIC WAVE - MUSKINGUM-CUNGE ROUTING
(FLOW IS DIRECT RUNOFF WITHOUT BASE FLOW)

							INTERPOLATED TO COMPUTATION INTERVAL		
ISTAQ	ELEMENT	DT	PEAK	TIME TO PEAK	VOLUME	DT	PEAK	TIME TO PEAK	VOLUME
		(MIN)	(CFS)	(MIN)	(IN)	(MIN)	(CFS)	(MIN)	(IN)
SUB16	MANE	3.00	2472.38	196.02	1.91	3.00	2469.90	198.00	1.91

CONTINUITY SUMMARY (AC-FT) - INFLOW= .0000E+00 EXCESS= .1494E+03 OUTFLOW= .1483E+03 BASIN STORAGE= .1503E+00 PERCENT ERROR= .6

```
SUB17  MANE        2.85   2073.93    196.76      1.91      3.00   2046.17    198.00        1.91

CONTINUITY SUMMARY (AC-FT) - INFLOW= .0000E+00 EXCESS= .1215E+03 OUTFLOW= .1205E+03 BASIN STORAGE= .1603E+00 PERCENT ERROR=    .7

SUB18  MANE        2.37   2345.66    195.89      1.91      3.00   2302.35    195.00        1.91

CONTINUITY SUMMARY (AC-FT) - INFLOW= .0000E+00 EXCESS= .1296E+03 OUTFLOW= .1287E+03 BASIN STORAGE= .1539E+00 PERCENT ERROR=    .6

SUB15  MANE        3.00   1809.82    206.90      1.83      3.00   1805.03    207.00        1.83

CONTINUITY SUMMARY (AC-FT) - INFLOW= .0000E+00 EXCESS= .1348E+03 OUTFLOW= .1339E+03 BASIN STORAGE= .1867E+00 PERCENT ERROR=    .6

SUB19  MANE        1.75    427.08    193.01      1.99      3.00    413.39    195.00        1.99

CONTINUITY SUMMARY (AC-FT) - INFLOW= .0000E+00 EXCESS= .1998E+02 OUTFLOW= .1990E+02 BASIN STORAGE= .1085E-01 PERCENT ERROR=    .3

SUB20  MANE        2.89   1086.43    194.86      1.99      3.00   1085.49    195.00        1.99

CONTINUITY SUMMARY (AC-FT) - INFLOW= .0000E+00 EXCESS= .6082E+02 OUTFLOW= .6043E+02 BASIN STORAGE= .5045E-01 PERCENT ERROR=    .6

  21A  MANE        2.36    727.87    194.87      1.69      3.00    724.59    195.00        1.69

CONTINUITY SUMMARY (AC-FT) - INFLOW= .0000E+00 EXCESS= .3800E+02 OUTFLOW= .3775E+02 BASIN STORAGE= .3393E-01 PERCENT ERROR=    .6

  21B  MANE        2.51    477.41    194.07      1.69      3.00    468.47    195.00        1.69

CONTINUITY SUMMARY (AC-FT) - INFLOW= .0000E+00 EXCESS= .2497E+02 OUTFLOW= .2482E+02 BASIN STORAGE= .2297E-01 PERCENT ERROR=    .5

  21C  MANE        3.00   1180.10    197.42      1.68      3.00   1157.98    198.00        1.68

CONTINUITY SUMMARY (AC-FT) - INFLOW= .0000E+00 EXCESS= .6768E+02 OUTFLOW= .6709E+02 BASIN STORAGE= .7573E-01 PERCENT ERROR=    .8

  21D  MANE        3.00   1408.20    202.33      1.68      3.00   1371.57    204.00        1.68

CONTINUITY SUMMARY (AC-FT) - INFLOW= .0000E+00 EXCESS= .9582E+02 OUTFLOW= .9501E+02 BASIN STORAGE= .1596E+00 PERCENT ERROR=    .7

  21E  MANE        3.00    381.07    196.89      1.68      3.00    377.98    198.00        1.68

CONTINUITY SUMMARY (AC-FT) - INFLOW= .0000E+00 EXCESS= .2325E+02 OUTFLOW= .2306E+02 BASIN STORAGE= .3492E-01 PERCENT ERROR=    .7
```

```
21F  MANE        3.00    622.59    203.26      1.68      3.00    620.37    201.00        1.68

CONTINUITY SUMMARY (AC-FT) - INFLOW= .0000E+00 EXCESS= .4244E+02 OUTFLOW= .4201E+02 BASIN STORAGE= .7962E-01 PERCENT ERROR=    .8

21G  MANE        3.00     24.02    200.58      1.68      3.00     23.85    201.00        1.68

CONTINUITY SUMMARY (AC-FT) - INFLOW= .0000E+00 EXCESS= .1556E+01 OUTFLOW= .1543E+01 BASIN STORAGE= .2307E-02 PERCENT ERROR=    .7

SUB22  MANE        2.26   2856.64    194.09      1.99      3.00   2847.06    195.00        1.99

CONTINUITY SUMMARY (AC-FT) - INFLOW= .0000E+00 EXCESS= .1482E+03 OUTFLOW= .1473E+03 BASIN STORAGE= .1150E+00 PERCENT ERROR=    .5

SUB23  MANE        2.44    795.89    195.19      1.99      3.00    789.47    195.00        1.99

CONTINUITY SUMMARY (AC-FT) - INFLOW= .0000E+00 EXCESS= .4218E+02 OUTFLOW= .4192E+02 BASIN STORAGE= .3382E-01 PERCENT ERROR=    .5

SUB24  MANE        2.21    685.80    197.41      1.48      3.00    677.83    198.00        1.48

CONTINUITY SUMMARY (AC-FT) - INFLOW= .0000E+00 EXCESS= .3899E+02 OUTFLOW= .3869E+02 BASIN STORAGE= .4935E-01 PERCENT ERROR=    .6

25N  MANE        2.92   1223.69    202.24      1.98      3.00   1222.72    204.00        1.98

CONTINUITY SUMMARY (AC-FT) - INFLOW= .0000E+00 EXCESS= .8352E+02 OUTFLOW= .8286E+02 BASIN STORAGE= .1392E+00 PERCENT ERROR=    .6

25S  MANE        3.00   1357.18    195.62      2.10      3.00   1350.69    195.00        2.10

CONTINUITY SUMMARY (AC-FT) - INFLOW= .0000E+00 EXCESS= .7073E+02 OUTFLOW= .7013E+02 BASIN STORAGE= .8036E-01 PERCENT ERROR=    .7

26A  MANE        1.16    272.60    192.40      1.51      3.00    272.23    192.00        1.51

CONTINUITY SUMMARY (AC-FT) - INFLOW= .0000E+00 EXCESS= .1303E+02 OUTFLOW= .1295E+02 BASIN STORAGE= .1177E-01 PERCENT ERROR=    .6

21H  MANE        3.00     59.13    202.44      1.64      3.00     58.86    201.00        1.64

CONTINUITY SUMMARY (AC-FT) - INFLOW= .0000E+00 EXCESS= .3806E+01 OUTFLOW= .3769E+01 BASIN STORAGE= .6710E-02 PERCENT ERROR=    .8

26B  MANE        3.00    551.59    211.43      1.24      3.00    545.82    210.00        1.24

CONTINUITY SUMMARY (AC-FT) - INFLOW= .0000E+00 EXCESS= .4358E+02 OUTFLOW= .4314E+02 BASIN STORAGE= .7695E-01 PERCENT ERROR=    .8
```

```
27  MANE          .77   1669.98    192.12      1.31      3.00   1663.46    192.00        1.31

CONTINUITY SUMMARY (AC-FT) - INFLOW= .0000E+00 EXCESS= .8380E+02 OUTFLOW= .8325E+02 BASIN STORAGE= .8333E-01 PERCENT ERROR=    .6


*** NORMAL END OF HEC-1 ***
```

RAW4A - GRSCFU

```
****************************************
*                                      *
*  FLOOD HYDROGRAPH PACKAGE  (HEC-1)   *
*          SEPTEMBER 1990              *
*           VERSION 4.0                *
*                                      *
* RUN DATE  03/21/1994  TIME  15:43:33 *
*                                      *
****************************************
```

```
****************************************
*                                      *
*   U.S. ARMY CORPS OF ENGINEERS       *
*   HYDROLOGIC ENGINEERING CENTER      *
*         609 SECOND STREET            *
*      DAVIS, CALIFORNIA 95616         *
*          (916) 756-1104              *
*                                      *
****************************************
```

```
X     X  XXXXXXX   XXXXX          X
X     X  X        X     X        XX
X     X  X        X              X
XXXXXXX  XXXX     X        XXXXX X
X     X  X        X              X
X     X  X        X     X        X
X     X  XXXXXXX   XXXXX        XXX
```

THIS PROGRAM REPLACES ALL PREVIOUS VERSIONS OF HEC-1 KNOWN AS HEC1 (JAN 73), HEC1GS, HEC1DB, AND HEC1KW.

THE DEFINITIONS OF VARIABLES -RTIMP- AND -RTIOR- HAVE CHANGED FROM THOSE USED WITH THE 1973-STYLE INPUT STRUCTURE.
THE DEFINITION OF -AMSKK- ON RM-CARD WAS CHANGED WITH REVISIONS DATED 28 SEP 81. THIS IS THE FORTRAN77 VERSION
NEW OPTIONS: DAMBREAK OUTFLOW SUBMERGENCE , SINGLE EVENT DAMAGE CALCULATION, DSS:WRITE STAGE FREQUENCY,
DSS:READ TIME SERIES AT DESIRED CALCULATION INTERVAL LOSS RATE:GREEN AND AMPT INFILTRATION
KINEMATIC WAVE: NEW FINITE DIFFERENCE ALGORITHM

HEC-1 INPUT PAGE 1

```
LINE          ID.......1.......2.......3.......4.......5.......6.......7.......8.......9......10

  1           ID       NORTH SCOTTSDALE FLOOD INSURANCE STUDY, FUTURE   CONDITIONS
  2           ID       1992 MODELING REVISIONS BASED ON REATA PASS SENSITIVITY ANALYSIS
  3           ID       MODEL FAN4.6I -- SUB-BASINS 15 THROUGH 21, 22, 23, 24 25N, &
  4           ID       25S.
  5           ID
  6           ID       100-YEAR, 6-HOUR STORM, USING HEC-1 HYPOTHETICAL DISTRIBUTION
  7           ID       RAINFALL FROM NOAA ATLAS
  8           ID
  9           ID       FILE RAW4A.DAT               WITH SUB-BASIN 21 SUBDIVIDED PER
 10           ID       CJL AND COMBINE HYDROGRAPHS FOR 22, 23, 24, 25N, 25S.  ROUTE
 11           ID       COMBINED HYD. 22, 23, 24, 25N 25S TO 21G.        SUB-BASIN
 12           ID       26 COMBINED AT THE APEX
 13           ID                          ROUTE THE HYDROGRAPH AT THE APEX
 14           ID            TO SCOTTSDALE ROAD JUST SOUTH OF PINNACLE PEAD ROAD.
 15           ID       INTERMEDIATE CONC. PTS.  ARE CALLED FOR AT FUTURE PROPOSED MAJOR
 16           ID       ROAD CROSSINGS.
 17           ID
 18           ID       REVISED BY GREINER 12-9-93 BY RON FERGUSON
 19           ID       REVISED BY C. J. LOVELY, COS, 3-9-94
 20           ID
 21           ID       ****************************************************************
 22           ID       * ROUTING REACHES AND CP'S ADDED WITHIN SUB AREA 21 TO REFLECT IN *
```

```
23        ID        * MORE DETAIL ACTUAL DRAINAGE AND CHANNEL REACH CONDITIONS.       *
24        ID        ******************************************************************
25        ID
26        ID
          *DIAGRAM
27        IT        5 03MAR94       0     300
28        IO        5       0       0       0

29        KK       16     SUB
30        KM
31        KM        RUNOFF FROM SUB-BASIN 16
32        KM
33        BA   1.4570
34        PH        0    9.70     .77    1.51    2.65    3.00    3.23    3.66
35        LS        0      83     9.8       0       0       0       0       0
36        UK      217   .0581     .20     100
37        RK    14800   .0216    .045       0    TRAP      25       3

38        KK       17     SUB
39        KM
40        KM        RUNOFF FROM SUB-BASIN 17
41        KM
42        BA   1.1851       0       0
43        LS        0      83     9.8
44        UK      285   .0421     .20     100       0       0       0
45        RK    12200   .0254    .045       0    TRAP      25       3

46        KK       18     SUB
47        KM
48        KM        RUNOFF FROM SUB-BASIN 18
49        BA   1.2641
50        LS        0      83     6.5       0
51        UK      285   .0421     .20     100       0       0       0
```

# of ordinates different from other models. Why? IT Card differs from Previous submittal


```
LINE      ID.......1.......2.......3.......4.......5.......6.......7.......8.......9......10

52        RK    10840   .0259    .045       0    TRAP      25       3

53        KK      19A      CP
54        KM
55        KM          COMBINE HYDROGRAPHS SUB16, SUB17 AND SUB18
56        HC        3

57        KK      19B      CP
58        KM
59        KM        ROUTE CP19A TO CP19B
60        KM
61        RS        1    FLOW      -1       0       0
62        RC     .055    .040    .055    1100   .0155       0       0       0
63        RX        0       1     126     132     167     173     298     299
64        RY       10       8       3       0       0       3       8      10

65        KK       15     SUB
66        KM
67        KM        RUNOFF FROM SUBBASIN 15
68        KM
69        BA   1.3702       0       0
70        LS        0      82     5.4       0
71        UK      217   .0581     .20     100       0       0       0
```

```
 72          RK   21200   .0236    .045       0    TRAP      25       3

 73          KK     19C      CP
 74          KM
 75          KM        COMBINE HYDROGRAPHS SUB15 & CP19B
 76          KM
 77          HC       2

 78          KK    19.1      CP
 79          KM
 80          KM        ROUTE CP 19C TO 19.1
 81          KM
 82          RS       1    FLOW      -1       0       0
 83          RC    .055    .040    .055    1800   .0200       0       0
 84          RX       0       1     151     166     216     231     381     382
 85          RY      10       9       3       0       0       3       9      10

 86          KK      19     SUB
 87          KM
 88          KM        RUNOFF FROM SUB-BASIN 19
 89          BA  0.1872
 90          LS       0      84     7.2       0
 91          UK     275   .0800     .20     100       0       0       0
 92          RK    3730   .0352    .045    .160    TRAP      15       3
 93          RK    1800   .0200    .045       0    TRAP      50      30

 94          KK      20     SUB
 95          KM
 96          KM        RUNOFF FROM SUB-BASIN 20
 97          KM
 98          BA  0.5698       0       0
 99          LS       0      84     3.6       0
                                    HEC-1 INPUT                                    PAGE  3

LINE         ID.......1.......2.......3.......4.......5.......6.......7.......8.......9......10

100          UK     300   .0750     .20     100       0       0       0
101          RK    9640   .0197    .045       0    TRAP      15       3

102          KK    CP20      CP
103          KM
104          KM        COMBINE SUB 19, SUB 20 AND CP 19.1
105          KM
106          HC       3
107          KM    *******BEGIN SUBAREA 21 BREAKDOWN-3/94 REVISIONS*****

108          KK  RRCP20      CP
109          KM
110          KM        ROUTE CP20 TO CP 21A, WHICH IS 4600'
111          KM
112          RS       1    FLOW      -1       0       0
113          RC    .055    .040    .055    4600   .0217       0       0       0
114          RX       0      30      60      85     195     220     250     280
115          RY      10       4       1       0       0       1       4      10

116          KK     21A     SUB
117          KM
118          KM        RUNOFF FROM SUB-BASIN 21A
119          KM
120          BA     .42       0       0
```

```
121          LS      0     80    6.4      0      0      0
122          UK    297  .0558    .20    100      0      0      0
123          RK   6400  .0344   .045      0   TRAP     10      3

124          KK  CP21A
125          HC      2

126          KK  RR21A     CP
127          KM
128          KM       ROUTE CP21A TO 21B    WHICH IS 960'
129          KM
130          RS      1   FLOW     -1      0      0
131          RC   .055   .040   .055    960  .0156      0      0      0
132          RX      0     10     60    205    295    440    490    500
133          RY      6      4      2      0      0      2      4      6

134          KK    21B    SUB
135          KM
136          KM       RUNOFF FROM SUB-BASIN 21B
137          KM
138          BA  0.276      0      0
139          LS      0     80    6.4      0      0      0
140          UK    297  .0558    .20    100      0      0      0
141          RK   6300  .0381   .045      0   TRAP     10      3

142          KK  CP21B
143          HC      2
```



```
LINE         ID.......1.......2.......3.......4.......5.......6.......7.......8.......9......10

144          KK  RR21B     CP
145          KM
146          KM       ROUTE CP21B TO 21C    WHICH IS 4400'
147          KM
148          RS      1   FLOW     -1      0      0
149          RC   .055   .040   .055   4400  .0205      0      0      0
150          RX      0     10     60    205    295    440    490    500
151          RY      6      4      2      0      0      2      4      6

152          KK    21C    SUB
153          KM
154          KM       RUNOFF FROM SUB-BASIN 21C
155          KM
156          BA   .748      0      0
157          LS      0     80    6.4      0      0      0
158          UK    297  .0558    .20    100      0      0      0
159          RK   9900  .0328   .045      0   TRAP     20      3

160          KK  CP21C
161          HC      2

162          KK  RR21C     CP
163          KM
164          KM       ROUTE CP21C TO 21D    WHICH IS 5700'
165          KM
166          RS      1   FLOW     -1      0      0
167          RC   .055   .040   .055   5700  .0181      0      0      0
168          RX      0     20    175    210    300    335    490    510
```

```
169          RY     5.5     3.5     2.5       0       0     2.5     3.5     5.5

170          KK     21D     SUB
171          KM
172          KM        RUNOFF FROM SUB-BASIN 21D
173          KM
174          BA   1.059       0       0
175          LS       0      80     6.4       0       0       0
176          UK     297   .0558     .20     100       0       0       0
177          RK   14500   .0252    .045       0    TRAP      30       3

178          KK   CP21D
179          HC       2

180          KK   RR21D      CP
181          KM
182          KM        ROUTE CP21D TO 21E    WHICH IS 1100'
183          KM
184          RS       1    FLOW      -1       0       0
185          RC    .055    .040    .055    1100   .0200       0       0       0
186          RX       0      20     175     210     300     335     490     510
187          RY     5.5     3.5     2.5       0       0     2.5     3.5     5.5
                                          HEC-1 INPUT                                    PAGE  5

LINE         ID.......1.......2.......3.......4.......5.......6.......7.......8.......9......10

188          KK     21E     SUB
189          KM
190          KM        RUNOFF FROM SUB-BASIN 21E
191          KM
192          BA   0.257       0       0
193          LS       0      80     6.4       0       0       0
194          UK     297   .0333     .20     100       0       0       0
195          RK    6600   .0288    .045       0    TRAP      15       3

196          KK   CP21E
197          HC       2

198          KK   RR21E      CP
199          KM
200          KM        ROUTE CP21E TO 21F    WHICH IS 2800'
201          KM
202          RS       1    FLOW      -1       0       0
203          RC    .055    .040    .055    2800   .0143       0       0       0
204          RX       0      70     170     180     230     240     340     410
205          RY    10.5     4.5     3.5       0       0     3.5     4.5    10.5

206          KK     21F     SUB
207          KM
208          KM        RUNOFF FROM SUB-BASIN 21F
209          KM
210          BA   0.469       0       0
211          LS       0      80     6.4       0       0       0
212          UK     297   .0333     .20     100       0       0       0
213          RK   10400   .0279    .045       0    TRAP      20       3

214          KK   CP21F
215          HC       2
```

```
216        KK   RR21F      CP
217        KM
218        KM        ROUTE CP21F TO 21G    WHICH IS 1900'
219        KM
220        RS       1    FLOW      -1       0       0
221        RC    .055    .040    .055    1900   .0158       0       0       0
222        RX       0      20      70     345     455     730     780     800
223        RY      10       8       2       0       0       2       8      10

224        KK     21G     SUB
225        KM
226        KM        RUNOFF FROM SUB-BASIN 21G
227        KM
228        BA   .0172       0       0
229        LS       0      80     6.4       0       0       0
230        UK     297   .0333     .20     100       0       0       0
231        RK    4000   .0300    .045       0    TRAP      10       3
                                     HEC-1 INPUT                                                    PAGE  6

LINE       ID.......1.......2.......3.......4.......5.......6.......7.......8.......9......10


232        KK   CP21G
233        HC       2
234        ZW     A=RAWHIDE GRSCFU C=FLOW F=MAIN

235        KK      22     SUB
236        KM
237        KM       RUNOFF FROM SUB-BASIN 22
238        KM
239        BA  1.3860
240        PH       0    2.27     .76    1.49    2.61    2.95    3.18    3.60
241        LS       0      84     5.1       0
242        UK     225   .0590     .20     100       0       0       0       0
243        RK   13000   .0238    .045       0    TRAP      25       3

244        KK      23     SUB
245        KM
246        KM        RUNOFF FROM SUB-BASIN 23
247        KM
248        BA  0.3945       0       0
249        LS       0      84     6.3       0
250        UK     225   .0590     .20     100       0       0       0
251        RK   10200   .0304    .045       0    TRAP      20       3

252        KK     24A      CP
253        KM
254        KM        COMBINE HYDROGRAPHS FOR SUB 22 AND SUB 23
255        KM
256        HC       2

257        KK    24.1      CP
258        KM
259        KM        ROUTE CP 24 TO CP 24.1
260        KM
261        RS       3    FLOW      -1       0       0
262        RC    .055    .040    .055    6800   .0257       0       0       0
263        RX       0       1     101     107     122     128     228     229
264        RY      10       8       3       0       0       3       8      10
```

```
265        KK      24     SUB
266        KM
267        KM        RUNOFF FROM SUB-BASIN 24
268        KM        DRAINAGE AREA CHANGED TO MATCH VALUE USED BY MICHAEL BAKER
269        KM        Jr., INC.
270        KM
271        BA  0.4907       0       0
272        LS       0      77     6.8       0
273        UK     295   .0438     .20     100       0       0       0
274        RK    6800   .0257    .045       0    TRAP      15       3
```



```
LINE       ID.......1.......2.......3.......4.......5.......6.......7.......8.......9......10

275        KK   24.2A      CP
276        KM
277        KM        COMBINE SUB 24 & CP 24.1 - APEX
278        KM
279        HC       2

280        KK     25N       SUB
281        KM
282        KM        RUNOFF FROM SUB-BASIN 25N - APEX
283        KM
284        BA  0.7834       0       0       0       0       0       0       0
285        PH       0     .78     .75    1.48    2.59    2.93    3.15    3.58
286        LS       0      84     9.0       0
287        UK     295   .0438     .20     100       0       0       0
288        RK   16700   .0302    .045       0    TRAP      25       3

289        KK     25S     SUB
290        KM
291        KM        RUNOFF FROM SUB-BASIN 25S - APEX
292        KM
293        BA  0.6256       0       0       0       0       0       0       0
294        PH       0     .63     .75    1.47    2.57    2.90    3.12    3.53
295        LS       0      86     9.0       0
296        UK     295   .0438     .20     100       0       0       0
297        RK    8900   .0278    .045       0    TRAP      25       3

298        KK    25.1      CP
299        KM
300        KM        COMBINE HYDROGRAPHS FOR SUB-BASINS 25N AND 25S
301        KM
302        HC       2

303        KK   24.2B      CP
304        KM
305        KM        COMBINE TOTAL HYDROGRAPH 24.2A WITH 25.1
306        KM
307        HC       2

308        KK  PIMARD      CP
309        KM
310        KM        ROUTE THE TOTAL HYDROGRAPH AT CONCENTRATION POINT
311        KM        24.2B TO THE CULVERT AT PIMA ROAD.  THERE IS NO
312        KM        CONTRIBUTING AREA AT THIS CONCENTRATION POINT.
313        KM
314        RS       1    FLOW      -1       0       0
```

```
315          RC    .055    .040    .055    2000   .0287       0       0       0
316          RX       0       1     101     107     122     128     228     229
317          RY      10       8       3       0       0       3       8      10
                                          HEC-1 INPUT                                                    PAGE  8

LINE         ID.......1.......2.......3.......4.......5.......6.......7.......8.......9......10


318          KK  RR24.2      CP
319          KM
320          KM        ROUTE THE TOTAL HYDROGRAPH AT CONCENTRATION POINT
321          KM        24.2 THE CULVERT UNDER PIMA ROAD TO CONCENTRATION
322          KM        POINT 21.05.
323          KM
324          RS       1    FLOW      -1       0       0
325          RC    .055    .040    .055    3050   .0238       0       0       0
326          RX       0       1     101     107     122     128     228     229
327          RY      10       8       3       0       0       3       8      10
328          ZW     A=RAWHIDE GRSCFU C=FLOW F=TRIB

329          KK  C21.05  CONFLUENCE OF THE DGB CHANNEL FROM SUB 24 AND 25
330          KM
331          KM        COMBINE ROUTED HYDROGRAPH RR21F  WITH SUB-BASIN 21G AND
332          KM        ROUTED HYDROGRAPH RR24.2 (FROM PIMA ROAD CULVERT).
333          KM
334          HC       2
335          ZW     A=RAWHIDE GRSCFU C=FLOW F=TOTAL

336          KK  R21.05      CP
337          KM
338          KM        ROUTE CP21G(21.05) TO CP21H    3100'
339          KM
340          RS       1    FLOW      -1       0       0
341          RC    .055    .040    .055    3100   .0194       0       0       0
342          RX       0      90     120     355     585     820     850     940
343          RY       9       4     1.5       0       0     1.5       4       9

344          KK     21H     SUB
345          KM
346          KM        RUNOFF FROM SUB-BASIN 21H
347          KM
348          BA   .0431       0       0
349          LS       0      80     6.4       0       0       0
350          UK     297   .0333     .20     100       0       0       0
351          RK    4600   .0278    .045       0    TRAP      20       3

352          KK   CP21H   JOMAX RD
353          HC       2

354          KK   RR21H      CP
355          KM
356          KM        ROUTE HYDROGRAPH AT CONCENTRATION POINT 21H   DOWNSTREAM FROM
357          KM        JOMAX ROAD           THERE IS NO ADDITIONAL CONTRIBUTING
358          KM        DRAINAGE AREA AT THIS CONCENTRATION POINT.  USED CHANNEL
359          KM        GEOMETRY                        FROM REACH SIX
360          KM             DEVELOPED BY C. LOVELY
361          KM
362          RS       1    FLOW      -1       0       0
363          RC    .055    .040    .055    2390   .0188       0       0       0
364          RX       0      90     120     355     585     820     850     940
```

```
365          RY      9      4    1.5      0      0    1.5      4      9

LINE         ID.......1.......2.......3.......4.......5.......6.......7.......8.......9......10

366          KK     26    SUB
367          KM
368          KM      RUNOFF FROM SUB-BASIN 26
369          BA  0.8048      0      0
370          LS      0     75   12.7      0
371          UK    200  .0250    .20    100      0      0      0
372          RK  16000  .0263   .045      0   TRAP     35     10

373          KK  *APEX*     CP
374          KM
375          KM       COMBINE FLOW FROM SUB-BASIN 26 ,
376          KM           AND ROUTED HYDROGRAPH FROM JOMAX ROAD.
377          KM
378          HC      2
379          KM       *********END SUBAREA 21 REVISIONS************

380          KK   CP27A      CP AT HAPPY VALLEY RD
381          KM
382          KM       ROUTE FLOW FROM CONCENTRATION POINT APEX  TO 27A (HAPPY VALLEY
383          KM       ROAD).  THERE IS NO CONTRIBUTING AREA AT THIS CONCENTRATION PT.
384          KM
385          RS      1    FLOW     -1      0      0
386          RC   .055    .040   .055   1600  .0196      0      0      0
387          RX      0       1    201    211    261    271    471    472
388          RY     10       4      2      0      0      2      4     10

389          KK   CP27B      CP AT MILLER RD.
390          KM
391          KM       ROUTE FLOW FROM CONCENTRATION POINT 27B TO 27C (MILLER ROAD).
392          KM       THERE IS NO CONTRIBUTING AREA AT THIS CONCENTRATION POINT.
393          KM
394          RS      1    FLOW     -1      0      0
395          RC   .055    .040   .055   3300  .0196      0      0      0
396          RX      0       1    201    211    261    271    471    472
397          RY     10       4      2      0      0      2      4     10

398          KK   CP27C      CP AT PINNACLE PEAK RD
399          KM
400          KM       ROUTE FLOW FROM CONCENTRATION POINT 27C TO 27D (PINNACLE PK ROAD).
401          KM       THERE IS NO CONTRIBUTING AREA AT THIS CONCENTRATION POINT.
402          KM
403          RS      1    FLOW     -1      0      0
404          RC   .055    .040   .055   3300  .0196      0      0      0
405          RX      0       1    201    211    261    271    471    472
406          RY     10       4      2      0      0      2      4     10

407          KK   CP27D     CP AT SCOTTSDALE RD
408          KM
409          KM       ROUTE FLOW FROM CONCENTRATION POINT 27C TO 27D (SCOTTSDALE ROAD)
410          KM       THERE IS NO CONTRIBUTING AREA AT THIS CONCENTRATION POINT.
411          KM
412          RS      1    FLOW     -1      0      0
413          RC   .055    .040   .055   1000  .0196      0      0      0
414          RX      0       1    201    211    261    271    471    472
```

```
LINE          ID.......1.......2.......3.......4.......5.......6.......7.......8.......9......10

 415          RY      10       4       2       0       0       2       4      10

 416          KK      27     SUB
 417          KM
 418          KM        RUNOFF FROM SUB-BASIN 27
 419          KM
 420          BA  1.1913       0       0
 421          LS       0      75    12.7       0
 422          UK     200   .0250     .20     100       0       0       0
 423          RK    1500   .0263    .045       0    TRAP      35      10

 424          KK    CP27      CP AT SCOTTSDALE RD
 425          KO       1
 426          KM
 427          KM        COMBINE TOTAL HYDROGRAPH FROM CONCENTRATION
 428          KM        POINT 27D WITH SUB 27 .  TOTAL FLOW AT
 429          KM        SCOTTSDALE ROAD FOR FAN 4.
 430          KM
 431          HC       2
 432          ZZ
```

SCHEMATIC DIAGRAM OF STREAM NETWORK

```
INPUT
 LINE     (V) ROUTING          (--->) DIVERSION OR PUMP FLOW

  NO.     (.) CONNECTOR        (<---) RETURN OF DIVERTED OR PUMPED FLOW

   29        16
             .
             .
   38        .          17
             .           .
             .           .
   46        .           .          18
             .           .           .
             .           .           .
   53      19A.......................
             V
             V
   57      19B
             .
             .
   65        .          15
             .           .
             .           .
   73      19C............
             V
             V
   78     19.1
             .
             .
   86        .          19
             .           .
             .           .
   94        .           .          20
             .           .           .
```

```
          .          .          .
102     CP20.......................
          V
          V
108    RRCP20
          .
          .
116       .          21A
          .            .
          .            .
124     CP21A............
          V
          V
126     RR21A
          .
          .
134       .          21B
          .            .
          .            .
142     CP21B............
          V
          V
144     RR21B
          .
          .
152       .          21C
          .            .
          .            .
160     CP21C............
          V
          V
162     RR21C
          .
          .
170       .          21D
          .            .
          .            .
178     CP21D............
          V
          V
180     RR21D
          .
          .
188       .          21E
          .            .
          .            .
196     CP21E............
          V
          V
198     RR21E
          .
          .
206       .          21F
          .            .
          .            .
214     CP21F............
          V
          V
216     RR21F
          .
```

```
          .
224       .        21G
          .         .
          .         .
232    CP21G............
          .
          .
235       .         22
          .         .
          .         .
244       .         .         23
          .         .          .
          .         .          .
252       .       24A............
          .         V
          .         V
257       .      24.1
          .         .
          .         .
265       .         .         24
          .         .          .
          .         .          .
275       .    24.2A............
          .         .
          .         .
280       .         .        25N
          .         .          .
          .         .          .
289       .         .          .        25S
          .         .          .         .
          .         .          .         .
298       .         .     25.1............
          .         .          .
          .         .          .
303       .    24.2B............
          .         V
          .         V
308       .    PIMARD
          .         V
          .         V
318       .    RR24.2
          .         .
          .         .
329    C21.05............
          V
          V
336    R21.05
          .
          .
344       .        21H
          .         .
          .         .
352    CP21H............
          V
          V
354    RR21H
          .
          .
366       .         26
          .         .
```

```
                .          .
 373        *APEX*............
                V
                V
 380         CP27A
                V
                V
 389         CP27B
                V
                V
 398         CP27C
                V
                V
 407         CP27D
                .
                .
 416            .          27
                .           .
                .           .
 424          CP27............

(***) RUNOFF ALSO COMPUTED AT THIS LOCATION
****************************************                    ****************************************
*                                      *                    *                                      *
*  FLOOD HYDROGRAPH PACKAGE  (HEC-1)   *                    *    U.S. ARMY CORPS OF ENGINEERS      *
*           SEPTEMBER 1990             *                    *    HYDROLOGIC ENGINEERING CENTER     *
*            VERSION 4.0               *                    *          609 SECOND STREET           *
*                                      *                    *       DAVIS, CALIFORNIA 95616        *
* RUN DATE  03/21/1994  TIME  15:43:33 *                    *           (916) 756-1104             *
*                                      *                    *                                      *
****************************************                    ****************************************
```

NORTH SCOTTSDALE FLOOD INSURANCE STUDY, FUTURE CONDITIONS
1992 MODELING REVISIONS BASED ON REATA PASS SENSITIVITY ANALYSIS
MODEL FAN4.6I -- SUB-BASINS 15 THROUGH 21, 22, 23, 24 25N, &
25S.

100-YEAR, 6-HOUR STORM, USING HEC-1 HYPOTHETICAL DISTRIBUTION
RAINFALL FROM NOAA ATLAS

FILE RAW4A.DAT WITH SUB-BASIN 21 SUBDIVIDED PER
CJL AND COMBINE HYDROGRAPHS FOR 22, 23, 24, 25N, 25S. ROUTE
COMBINED HYD. 22, 23, 24, 25N 25S TO 21G. SUB-BASIN
26 COMBINED AT THE APEX
ROUTE THE HYDROGRAPH AT THE APEX
TO SCOTTSDALE ROAD JUST SOUTH OF PINNACLE PEAD ROAD.
INTERMEDIATE CONC. PTS. ARE CALLED FOR AT FUTURE PROPOSED MAJOR
ROAD CROSSINGS.

REVISED BY GREINER 12-9-93 BY RON FERGUSON
REVISED BY C. J. LOVELY, COS, 3-9-94

```
*******************************************************************
* ROUTING REACHES AND CP'S ADDED WITHIN SUB AREA 21 TO REFLECT IN *
* MORE DETAIL ACTUAL DRAINAGE AND CHANNEL REACH CONDITIONS.       *
*******************************************************************
```

```
 28 IO          OUTPUT CONTROL VARIABLES
                      IPRNT           5  PRINT CONTROL
                      IPLOT           0  PLOT CONTROL
                      QSCAL          0.  HYDROGRAPH PLOT SCALE

    IT          HYDROGRAPH TIME DATA
                       NMIN           5  MINUTES IN COMPUTATION INTERVAL
                      IDATE      3MAR94  STARTING DATE
                      ITIME        0000  STARTING TIME
                         NQ         300  NUMBER OF HYDROGRAPH ORDINATES
                     NDDATE      4MAR94  ENDING DATE
                     NDTIME        0055  ENDING TIME
                      ICENT          19  CENTURY MARK

                 COMPUTATION INTERVAL     .08 HOURS
                      TOTAL TIME BASE   24.92 HOURS

        ENGLISH UNITS
             DRAINAGE AREA          SQUARE MILES
             PRECIPITATION DEPTH    INCHES
             LENGTH, ELEVATION      FEET
             FLOW                   CUBIC FEET PER SECOND
             STORAGE VOLUME         ACRE-FEET
             SURFACE AREA           ACRES
             TEMPERATURE            DEGREES FAHRENHEIT
  -----DSS---ZOPEN:  Version: 6-EA;  New File Opened
                     Unit:  71,  File: RAW4A.DSS
-----DSS---ZWRITE Unit  71; Vers.    1:  /RAWHIDE GRSCFU/CP21G/FLOW/02MAR1994/5MIN/MAIN/
-----DSS---ZWRITE Unit  71; Vers.    1:  /RAWHIDE GRSCFU/CP21G/FLOW/03MAR1994/5MIN/MAIN/
-----DSS---ZWRITE Unit  71; Vers.    1:  /RAWHIDE GRSCFU/CP21G/FLOW/04MAR1994/5MIN/MAIN/
-----DSS---ZWRITE Unit  71; Vers.    1:  /RAWHIDE GRSCFU/RR24.2/FLOW/02MAR1994/5MIN/TRIB/
-----DSS---ZWRITE Unit  71; Vers.    1:  /RAWHIDE GRSCFU/RR24.2/FLOW/03MAR1994/5MIN/TRIB/
-----DSS---ZWRITE Unit  71; Vers.    1:  /RAWHIDE GRSCFU/RR24.2/FLOW/04MAR1994/5MIN/TRIB/
-----DSS---ZWRITE Unit  71; Vers.    1:  /RAWHIDE GRSCFU/C21.05/FLOW/02MAR1994/5MIN/TOTAL/
-----DSS---ZWRITE Unit  71; Vers.    1:  /RAWHIDE GRSCFU/C21.05/FLOW/03MAR1994/5MIN/TOTAL/
-----DSS---ZWRITE Unit  71; Vers.    1:  /RAWHIDE GRSCFU/C21.05/FLOW/04MAR1994/5MIN/TOTAL/


*** *** *** *** *** *** *** *** *** *** *** *** *** *** *** *** *** *** *** *** *** *** *** *** *** *** *** *** *** *** *** *** *** ***


          **************
          *            *
 424 KK   *      CP27  *          CP AT SCOTTSDALE RD
          *            *
          **************

 425 KO          OUTPUT CONTROL VARIABLES
                      IPRNT           1  PRINT CONTROL
                      IPLOT           0  PLOT CONTROL
                      QSCAL          0.  HYDROGRAPH PLOT SCALE

                              COMBINE TOTAL HYDROGRAPH FROM CONCENTRATION
                              POINT 27D WITH SUB 27 .  TOTAL FLOW AT
                              SCOTTSDALE ROAD FOR FAN 4.
```

431 HC HYDROGRAPH COMBINATION

ICOMP 2 NUMBER OF HYDROGRAPHS TO COMBINE

***

HYDROGRAPH AT STATION CP27

SUM OF 2 HYDROGRAPHS

DA MON HRMN	ORD	FLOW	DA MON HRMN	ORD	FLOW	DA MON HRMN	ORD	FLOW	DA MON HRMN	ORD	FLOW
3 MAR 0000	1	0.	3 MAR 0615	76	1690.	3 MAR 1230	151	48.	3 MAR 1845	226	3.
3 MAR 0005	2	0.	3 MAR 0620	77	1604.	3 MAR 1235	152	46.	3 MAR 1850	227	3.
3 MAR 0010	3	0.	3 MAR 0625	78	1524.	3 MAR 1240	153	44.	3 MAR 1855	228	3.
3 MAR 0015	4	0.	3 MAR 0630	79	1459.	3 MAR 1245	154	42.	3 MAR 1900	229	3.
3 MAR 0020	5	0.	3 MAR 0635	80	1401.	3 MAR 1250	155	40.	3 MAR 1905	230	3.
3 MAR 0025	6	1.	3 MAR 0640	81	1349.	3 MAR 1255	156	38.	3 MAR 1910	231	3.
3 MAR 0030	7	1.	3 MAR 0645	82	1298.	3 MAR 1300	157	37.	3 MAR 1915	232	3.
3 MAR 0035	8	1.	3 MAR 0650	83	1251.	3 MAR 1305	158	35.	3 MAR 1920	233	3.
3 MAR 0040	9	1.	3 MAR 0655	84	1202.	3 MAR 1310	159	33.	3 MAR 1925	234	3.
3 MAR 0045	10	1.	3 MAR 0700	85	1155.	3 MAR 1315	160	32.	3 MAR 1930	235	3.
3 MAR 0050	11	2.	3 MAR 0705	86	1108.	3 MAR 1320	161	30.	3 MAR 1935	236	3.
3 MAR 0055	12	2.	3 MAR 0710	87	1059.	3 MAR 1325	162	29.	3 MAR 1940	237	3.
3 MAR 0100	13	2.	3 MAR 0715	88	1004.	3 MAR 1330	163	28.	3 MAR 1945	238	3.
3 MAR 0105	14	3.	3 MAR 0720	89	936.	3 MAR 1335	164	27.	3 MAR 1950	239	3.
3 MAR 0110	15	3.	3 MAR 0725	90	878.	3 MAR 1340	165	25.	3 MAR 1955	240	2.
3 MAR 0115	16	4.	3 MAR 0730	91	827.	3 MAR 1345	166	24.	3 MAR 2000	241	2.
3 MAR 0120	17	5.	3 MAR 0735	92	779.	3 MAR 1350	167	23.	3 MAR 2005	242	2.
3 MAR 0125	18	5.	3 MAR 0740	93	733.	3 MAR 1355	168	22.	3 MAR 2010	243	2.
3 MAR 0130	19	6.	3 MAR 0745	94	689.	3 MAR 1400	169	21.	3 MAR 2015	244	2.
3 MAR 0135	20	7.	3 MAR 0750	95	646.	3 MAR 1405	170	20.	3 MAR 2020	245	2.
3 MAR 0140	21	8.	3 MAR 0755	96	608.	3 MAR 1410	171	19.	3 MAR 2025	246	2.
3 MAR 0145	22	9.	3 MAR 0800	97	576.	3 MAR 1415	172	19.	3 MAR 2030	247	2.
3 MAR 0150	23	11.	3 MAR 0805	98	545.	3 MAR 1420	173	18.	3 MAR 2035	248	2.
3 MAR 0155	24	12.	3 MAR 0810	99	512.	3 MAR 1425	174	17.	3 MAR 2040	249	2.
3 MAR 0200	25	13.	3 MAR 0815	100	481.	3 MAR 1430	175	16.	3 MAR 2045	250	2.
3 MAR 0205	26	15.	3 MAR 0820	101	453.	3 MAR 1435	176	16.	3 MAR 2050	251	2.
3 MAR 0210	27	17.	3 MAR 0825	102	428.	3 MAR 1440	177	15.	3 MAR 2055	252	2.
3 MAR 0215	28	18.	3 MAR 0830	103	407.	3 MAR 1445	178	14.	3 MAR 2100	253	2.
3 MAR 0220	29	20.	3 MAR 0835	104	389.	3 MAR 1450	179	14.	3 MAR 2105	254	2.
3 MAR 0225	30	22.	3 MAR 0840	105	372.	3 MAR 1455	180	13.	3 MAR 2110	255	2.
3 MAR 0230	31	26.	3 MAR 0845	106	356.	3 MAR 1500	181	13.	3 MAR 2115	256	2.
3 MAR 0235	32	29.	3 MAR 0850	107	341.	3 MAR 1505	182	12.	3 MAR 2120	257	2.
3 MAR 0240	33	37.	3 MAR 0855	108	326.	3 MAR 1510	183	12.	3 MAR 2125	258	2.
3 MAR 0245	34	45.	3 MAR 0900	109	312.	3 MAR 1515	184	11.	3 MAR 2130	259	2.
3 MAR 0250	35	73.	3 MAR 0905	110	299.	3 MAR 1520	185	11.	3 MAR 2135	260	2.
3 MAR 0255	36	144.	3 MAR 0910	111	289.	3 MAR 1525	186	11.	3 MAR 2140	261	2.
3 MAR 0300	37	357.	3 MAR 0915	112	278.	3 MAR 1530	187	10.	3 MAR 2145	262	2.
3 MAR 0305	38	1314.	3 MAR 0920	113	267.	3 MAR 1535	188	10.	3 MAR 2150	263	2.
3 MAR 0310	39	2110.	3 MAR 0925	114	254.	3 MAR 1540	189	10.	3 MAR 2155	264	2.
3 MAR 0315	40	1851.	3 MAR 0930	115	242.	3 MAR 1545	190	9.	3 MAR 2200	265	2.
3 MAR 0320	41	1355.	3 MAR 0935	116	230.	3 MAR 1550	191	9.	3 MAR 2205	266	2.
3 MAR 0325	42	1189.	3 MAR 0940	117	218.	3 MAR 1555	192	9.	3 MAR 2210	267	2.
3 MAR 0330	43	1551.	3 MAR 0945	118	206.	3 MAR 1600	193	8.	3 MAR 2215	268	1.
3 MAR 0335	44	2113.	3 MAR 0950	119	194.	3 MAR 1605	194	8.	3 MAR 2220	269	1.
3 MAR 0340	45	2946.	3 MAR 0955	120	183.	3 MAR 1610	195	8.	3 MAR 2225	270	1.

3 MAR 0345	46	4598.	*	3 MAR 1000	121	173.	*	3 MAR 1615	196	7.	*	3 MAR 2230	271	1.
3 MAR 0350	47	7299.	*	3 MAR 1005	122	163.	*	3 MAR 1620	197	7.	*	3 MAR 2235	272	1.
3 MAR 0355	48	10079.	*	3 MAR 1010	123	154.	*	3 MAR 1625	198	7.	*	3 MAR 2240	273	1.
3 MAR 0400	49	11586.	*	3 MAR 1015	124	145.	*	3 MAR 1630	199	7.	*	3 MAR 2245	274	1.
3 MAR 0405	50	12009.	*	3 MAR 1020	125	137.	*	3 MAR 1635	200	7.	*	3 MAR 2250	275	1.
3 MAR 0410	51	11684.	*	3 MAR 1025	126	129.	*	3 MAR 1640	201	6.	*	3 MAR 2255	276	1.
3 MAR 0415	52	11037.	*	3 MAR 1030	127	122.	*	3 MAR 1645	202	6.	*	3 MAR 2300	277	1.
3 MAR 0420	53	10237.	*	3 MAR 1035	128	115.	*	3 MAR 1650	203	6.	*	3 MAR 2305	278	1.
3 MAR 0425	54	9321.	*	3 MAR 1040	129	109.	*	3 MAR 1655	204	6.	*	3 MAR 2310	279	1.
3 MAR 0430	55	8424.	*	3 MAR 1045	130	103.	*	3 MAR 1700	205	6.	*	3 MAR 2315	280	1.
3 MAR 0435	56	7688.	*	3 MAR 1050	131	99.	*	3 MAR 1705	206	6.	*	3 MAR 2320	281	1.
3 MAR 0440	57	6980.	*	3 MAR 1055	132	95.	*	3 MAR 1710	207	5.	*	3 MAR 2325	282	1.
3 MAR 0445	58	6323.	*	3 MAR 1100	133	92.	*	3 MAR 1715	208	5.	*	3 MAR 2330	283	1.
3 MAR 0450	59	5771.	*	3 MAR 1105	134	91.	*	3 MAR 1720	209	5.	*	3 MAR 2335	284	1.
3 MAR 0455	60	5359.	*	3 MAR 1110	135	89.	*	3 MAR 1725	210	5.	*	3 MAR 2340	285	1.
3 MAR 0500	61	4920.	*	3 MAR 1115	136	87.	*	3 MAR 1730	211	5.	*	3 MAR 2345	286	1.
3 MAR 0505	62	4485.	*	3 MAR 1120	137	84.	*	3 MAR 1735	212	5.	*	3 MAR 2350	287	1.
3 MAR 0510	63	4092.	*	3 MAR 1125	138	82.	*	3 MAR 1740	213	5.	*	3 MAR 2355	288	1.
3 MAR 0515	64	3768.	*	3 MAR 1130	139	79.	*	3 MAR 1745	214	4.	*	4 MAR 0000	289	1.
3 MAR 0520	65	3503.	*	3 MAR 1135	140	77.	*	3 MAR 1750	215	4.	*	4 MAR 0005	290	1.
3 MAR 0525	66	3248.	*	3 MAR 1140	141	74.	*	3 MAR 1755	216	4.	*	4 MAR 0010	291	1.
3 MAR 0530	67	3012.	*	3 MAR 1145	142	71.	*	3 MAR 1800	217	4.	*	4 MAR 0015	292	1.
3 MAR 0535	68	2794.	*	3 MAR 1150	143	68.	*	3 MAR 1805	218	4.	*	4 MAR 0020	293	1.
3 MAR 0540	69	2598.	*	3 MAR 1155	144	66.	*	3 MAR 1810	219	4.	*	4 MAR 0025	294	1.
3 MAR 0545	70	2424.	*	3 MAR 1200	145	63.	*	3 MAR 1815	220	4.	*	4 MAR 0030	295	1.
3 MAR 0550	71	2268.	*	3 MAR 1205	146	60.	*	3 MAR 1820	221	4.	*	4 MAR 0035	296	1.
3 MAR 0555	72	2127.	*	3 MAR 1210	147	58.	*	3 MAR 1825	222	4.	*	4 MAR 0040	297	1.
3 MAR 0600	73	2002.	*	3 MAR 1215	148	55.	*	3 MAR 1830	223	4.	*	4 MAR 0045	298	1.
3 MAR 0605	74	1887.	*	3 MAR 1220	149	53.	*	3 MAR 1835	224	3.	*	4 MAR 0050	299	1.
3 MAR 0610	75	1784.	*	3 MAR 1225	150	50.	*	3 MAR 1840	225	3.	*	4 MAR 0055	300	1.
			*				*				*			

****

PEAK FLOW (CFS)	TIME (HR)		MAXIMUM AVERAGE FLOW 6-HR	24-HR	72-HR	24.92-HR
		(CFS)				
12009.	4.08		3006.	778.	749.	749.
		(INCHES)	1.864	1.929	1.929	1.929
		(AC-FT)	1491.	1543.	1543.	1543.

CUMULATIVE AREA = 15.00 SQ MI

RUNOFF SUMMARY
FLOW IN CUBIC FEET PER SECOND
TIME IN HOURS, AREA IN SQUARE MILES

OPERATION	STATION	PEAK FLOW	TIME OF PEAK	AVERAGE FLOW FOR MAXIMUM PERIOD 6-HOUR	24-HOUR	72-HOUR	BASIN AREA	MAXIMUM STAGE	TIME OF MAX STAGE
HYDROGRAPH AT	16	2683. +200	3.25	323.	81.	78.	1.46		
HYDROGRAPH AT	17	2184. +100	3.25	262.	66.	64.	1.19		
HYDROGRAPH AT	18	2431. +400	3.25	273.	69.	66.	1.26		

3 COMBINED AT									
	19A	7297.	3.25	857.	216.	208.	3.91		
ROUTED TO									
	19B	7225.	3.33	857.	216.	208.	3.91		
								7.03	3.33
HYDROGRAPH AT									
	15	1901.	3.42	281.	71.	68.	1.37		
2 COMBINED AT									
	19C	8929.	3.33	1138.	287.	277.	5.28		
ROUTED TO									
	19.1	8529.	3.33	1138.	287.	277.	5.28		
								6.10	3.33
HYDROGRAPH AT									
	19	445.	3.25	42.	11.	10.	.19		
HYDROGRAPH AT									
	20	1086.	3.25	125.	31.	30.	.57		
3 COMBINED AT									
	CP20	9887.	3.33	1305.	329.	317.	6.03		
ROUTED TO									
	RRCP20	9129.	3.42	1303.	329.	317.	6.03		
								4.09	3.42
HYDROGRAPH AT									
	21A	784.	3.25	81.	20.	20.	.42		
2 COMBINED AT									
	CP21A	9593.	3.42	1384.	350.	337.	6.45		
ROUTED TO									
	RR21A	9383.	3.50	1383.	350.	337.	6.45		
								3.46	3.50
HYDROGRAPH AT									
	21B	512.	3.25	53.	13.	13.	.28		
2 COMBINED AT									
	CP21B	9671.	3.42	1436.	363.	350.	6.73		
ROUTED TO									
	RR21B	8973.	3.58	1435.	363.	350.	6.73		
								3.74	3.58
HYDROGRAPH AT									
	21C	1248.	3.25	144.	36.	35.	.75		
2 COMBINED AT									
	CP21C	9578.	3.50	1578.	399.	385.	7.48		
ROUTED TO									
	RR21C	7972.	3.67	1571.	399.	385.	7.48		
								4.10	3.67

HYDROGRAPH AT	21D	1500.	3.33	204.	51.	50.	1.06		
2 COMBINED AT	CP21D	8765.	3.67	1773.	451.	434.	8.54		
ROUTED TO	RR21D	8701.	3.75	1773.	451.	434.	8.54	4.16	3.75
HYDROGRAPH AT	21E	402.	3.33	50.	12.	12.	.26		
2 COMBINED AT	CP21E	8840.	3.75	1822.	463.	446.	8.79		
ROUTED TO	RR21E	8580.	3.75	1819.	463.	446.	8.79	6.35	3.75
HYDROGRAPH AT	21F	666.	3.33	90.	23.	22.	.47		
2 COMBINED AT	CP21F	8865.	3.75	1908.	486.	468.	9.26		
ROUTED TO	RR21F	8833.	3.83	1905.	486.	468.	9.26	2.70	3.83
HYDROGRAPH AT	21G	26.	3.33	[illegible]	3.	[illegible]	1.[illegible]	.02	[illegible]
2 COMBINED AT	CP21G	8841.	3.83	1908.	487.	469.	9.28		
HYDROGRAPH AT	22	3020.	3.25	308.	78.	75.	1.39		
HYDROGRAPH AT	23	826.	3.25	88.	22.	21.	.39		
2 COMBINED AT	24A	3846.	3.25	396.	100.	96.	1.78		
ROUTED TO	24.1	3068.	3.42	396.	100.	96.	1.78	5.69	3.42
HYDROGRAPH AT	24	742.	3.25	85.	21.	21.	.49		
2 COMBINED AT	24.2A	3621.	3.42	481.	121.	117.	2.27		
HYDROGRAPH AT	25N	1291.	3.33	177.	45.	43.	.78		
HYDROGRAPH AT									

	25S	1443.	3.25	149.	38.	36.	.63		
2 COMBINED AT									
	25.1	2507.	3.33	327.	82.	79.	1.41		
2 COMBINED AT									
	24.2B	5820.	3.42	807.	204.	196.	3.68		
ROUTED TO									
	PIMARD	5755.	3.42	807.	204.	196.	3.68	6.94	3.42
ROUTED TO									
	RR24.2	5478.	3.50	807.	204.	196.	3.68	7.04 x1.5	3.50
2 COMBINED AT									
	C21.05	12238.	3.75	2713.	691.	665.	12.96		
ROUTED TO									
	R21.05	12054.	3.83	2705.	691.	665.	12.96	2.55 x.3	3.83
HYDROGRAPH AT									
	21H	66.	3.33	8.	2.	2.	.04		
2 COMBINED AT									
	CP21H	12075.	3.83	2713.	693.	667.	13.00		
ROUTED TO									
	RR21H	11917.	3.83	2708.	693.	667.	13.00	2.55 x.42	3.83
HYDROGRAPH AT									
	26	778.	3.58	135.	34.	33.	.80		
2 COMBINED AT									
	APEX	12410.	3.83	2838.	727.	700.	13.81		
ROUTED TO									
	CP27A	12361.	3.92	2837.	727.	700.	13.81	5.45 x.32	3.92
ROUTED TO									
	CP27B	12091.	4.00	2834.	727.	700.	13.81	5.40	4.00
ROUTED TO									
	CP27C	11795.	4.08	2830.	727.	700.	13.81	5.36 x.23	4.08
ROUTED TO									
	CP27D	11808.	4.08	2830.	727.	700.	13.81	5.36 1.43	4.08
HYDROGRAPH AT									
	27	2100.	3.17	202.	51.	49.	1.19		
2 COMBINED AT									
	CP27	12009.	4.08	3006.	778.	749.	15.00		

HYDROGRAPH AT

higher Q due to larger area.

Area larger than Previous Submittal (0.8 vs 0.4)

higher

SUMMARY OF KINEMATIC WAVE - MUSKINGUM-CUNGE ROUTING
(FLOW IS DIRECT RUNOFF WITHOUT BASE FLOW)

ISTAQ	ELEMENT	DT (MIN)	PEAK (CFS)	TIME TO PEAK (MIN)	VOLUME (IN)	INTERPOLATED TO COMPUTATION INTERVAL DT (MIN)	PEAK (CFS)	TIME TO PEAK (MIN)	VOLUME (IN)
16	MANE	3.27	2790.08	197.97	2.08	5.00	2682.70	195.00	2.08

CONTINUITY SUMMARY (AC-FT) - INFLOW= .0000E+00 EXCESS= .1620E+03 OUTFLOW= .1613E+03 BASIN STORAGE= .4299E-01 PERCENT ERROR= .4

17	MANE	3.68	2249.16	195.52	2.07	5.00	2183.62	195.00	2.08

CONTINUITY SUMMARY (AC-FT) - INFLOW= .0000E+00 EXCESS= .1317E+03 OUTFLOW= .1309E+03 BASIN STORAGE= .4985E-01 PERCENT ERROR= .6

18	MANE	3.18	2466.56	196.97	2.02	5.00	2431.12	195.00	2.02

CONTINUITY SUMMARY (AC-FT) - INFLOW= .0000E+00 EXCESS= .1368E+03 OUTFLOW= .1360E+03 BASIN STORAGE= .5145E-01 PERCENT ERROR= .6

15	MANE	3.51	1901.39	207.57	1.93	5.00	1901.08	205.00	1.93

CONTINUITY SUMMARY (AC-FT) - INFLOW= .0000E+00 EXCESS= .1417E+03 OUTFLOW= .1409E+03 BASIN STORAGE= .5998E-01 PERCENT ERROR= .5

19	MANE	1.80	456.95	193.94	2.11	5.00	444.60	195.00	2.11

CONTINUITY SUMMARY (AC-FT) - INFLOW= .0000E+00 EXCESS= .2111E+02 OUTFLOW= .2104E+02 BASIN STORAGE= .3666E-02 PERCENT ERROR= .4

20	MANE	3.77	1138.08	196.21	2.05	5.00	1086.14	195.00	2.05

CONTINUITY SUMMARY (AC-FT) - INFLOW= .0000E+00 EXCESS= .6254E+02 OUTFLOW= .6220E+02 BASIN STORAGE= .1496E-01 PERCENT ERROR= .5

21A	MANE	2.36	804.58	193.66	1.81	5.00	783.53	195.00	1.81

CONTINUITY SUMMARY (AC-FT) - INFLOW= .0000E+00 EXCESS= .4070E+02 OUTFLOW= .4053E+02 BASIN STORAGE= .1094E-01 PERCENT ERROR= .4

21B	MANE	2.56	520.22	194.23	1.81	5.00	511.64	195.00	1.81

CONTINUITY SUMMARY (AC-FT) - INFLOW= .0000E+00 EXCESS= .2674E+02 OUTFLOW= .2663E+02 BASIN STORAGE= .7314E-02 PERCENT ERROR= .4

21C	MANE	3.23	1300.20	196.60	1.81	5.00	1248.06	195.00	1.81

CONTINUITY SUMMARY (AC-FT) - INFLOW= .0000E+00 EXCESS= .7248E+02 OUTFLOW= .7205E+02 BASIN STORAGE= .2485E-01 PERCENT ERROR= .6

21D	MANE	3.10	1538.29	200.70	1.81	5.00	1499.66	200.00	1.81

CONTINUITY SUMMARY (AC-FT) - INFLOW= .0000E+00 EXCESS= .1026E+03 OUTFLOW= .1020E+03 BASIN STORAGE= .5119E-01 PERCENT ERROR= .5

21E	MANE	3.04	421.12	198.38	1.81	5.00	401.68	200.00	1.81

CONTINUITY SUMMARY (AC-FT) - INFLOW= .0000E+00 EXCESS= .2490E+02 OUTFLOW= .2476E+02 BASIN STORAGE= .1083E-01 PERCENT ERROR= .5

21F	MANE	4.33	687.84	201.28	1.80	5.00	666.34	200.00	1.80

CONTINUITY SUMMARY (AC-FT) - INFLOW= .0000E+00 EXCESS= .4544E+02 OUTFLOW= .4507E+02 BASIN STORAGE= .2383E-01 PERCENT ERROR= .8

21G	MANE	4.06	26.27	199.44	1.80	5.00	26.04	200.00	1.81

CONTINUITY SUMMARY (AC-FT) - INFLOW= .0000E+00 EXCESS= .1667E+01 OUTFLOW= .1656E+01 BASIN STORAGE= .7499E-03 PERCENT ERROR= .6

22	MANE	2.73	3025.98	194.90	2.08	5.00	3019.97	195.00	2.08

CONTINUITY SUMMARY (AC-FT) - INFLOW= .0000E+00 EXCESS= .1541E+03 OUTFLOW= .1535E+03 BASIN STORAGE= .3882E-01 PERCENT ERROR= .4

23	MANE	2.91	825.66	194.42	2.09	5.00	825.61	195.00	2.09

CONTINUITY SUMMARY (AC-FT) - INFLOW= .0000E+00 EXCESS= .4426E+02 OUTFLOW= .4406E+02 BASIN STORAGE= .9879E-02 PERCENT ERROR= .4

24	MANE	2.72	772.90	196.32	1.62	5.00	742.47	195.00	1.62

CONTINUITY SUMMARY (AC-FT) - INFLOW= .0000E+00 EXCESS= .4271E+02 OUTFLOW= .4246E+02 BASIN STORAGE= .1641E-01 PERCENT ERROR= .5

25N	MANE	4.22	1314.40	204.28	2.12	5.00	1291.35	200.00	2.13

CONTINUITY SUMMARY (AC-FT) - INFLOW= .0000E+00 EXCESS= .8944E+02 OUTFLOW= .8877E+02 BASIN STORAGE= .4193E-01 PERCENT ERROR= .7

25S	MANE	3.02	1459.60	193.54	2.24	5.00	1442.83	195.00	2.24

CONTINUITY SUMMARY (AC-FT) - INFLOW= .0000E+00 EXCESS= .7494E+02 OUTFLOW= .7457E+02 BASIN STORAGE= .2334E-01 PERCENT ERROR= .5

21H	MANE	3.10	66.55	200.05	1.76	5.00	66.45	200.00	1.76

```
CONTINUITY SUMMARY (AC-FT) - INFLOW= .0000E+00 EXCESS= .4081E+01 OUTFLOW= .4054E+01 BASIN STORAGE= .2183E-02 PERCENT ERROR=    .6

                26  MANE        4.02    780.40    215.61      1.59      5.00    778.21    215.00        1.59

CONTINUITY SUMMARY (AC-FT) - INFLOW= .0000E+00 EXCESS= .6864E+02 OUTFLOW= .6826E+02 BASIN STORAGE= .3803E-01 PERCENT ERROR=    .5

                27  MANE         .62   2135.43    191.52      1.59      5.00   2100.40    190.00        1.59

 ONTINUITY SUMMARY (AC-FT) - INFLOW= .0000E+00 EXCESS= .1016E+03 OUTFLOW= .1013E+03 BASIN STORAGE= .2864E-01 PERCENT ERROR=    .3


** NORMAL END OF HEC-1 ***


  -----DSS---ZCLOSE Unit:  71,   File: RAW4A.DSS
            Pointer Utilization:   .25
            Number of Records:      9
            File Size:     22.8  Kbytes
            Percent Inactive:   .00
```