Final Drainage Report

Contract No. 93-28
Project 153 MA 3 H 3315 01D
Sky Harbor Expressway

SR 153

19 January 1994
Revised 28 March 1994

Property of
Flood Control District of MC Library
Please Return to
2801 W. Durango
Phoenix, AZ 85009

REGISTERED PROFESSIONAL ENGINEER (CIVIL)
CERTIFICATE NO.
23663
DAVID J.
SCHAUB
Date Signed 4-15-94
ARIZONA, U.S.A.

Prepared For
Arizona Department of Transportation

BRW

Prepared By
BRW, Inc.
2700 North Central Avenue
Suite 1000
Phoenix, Arizona 85004

Final Drainage Report

Contract No. 93-28
Project 153 MA 3 H 3315 01D
Sky Harbor Expressway

SR 153

19 January 1994
Revised 28 March 1994

REGISTERED PROFESSIONAL ENGINEER (CIVIL)
CERTIFICATE NO. 23663
DAVID J. SCHAUB
Date Signed 4-15-94
ARIZONA, U.S.A.

Prepared For
Arizona Department of Transportation

BRW

Prepared By
BRW, Inc.
2700 North Central Avenue
Suite 1000
Phoenix, Arizona 85004

Property of
Flood Control District of MC Library
Please Return to
2801 W. Durango
Phoenix, AZ 85009

Table of Contents

CHAPTER		PAGE
1.0	INTRODUCTION	1
1.1	Purpose of Report	1
2.0	SITE DESCRIPTION	1
2.1	Project Location and Description	1
2.2	Topographic Features and Existing Drainage Features	1
2.3	Present Development	5
2.4	Future Development	5
3.0	DRAINAGE DESIGN DEVELOPMENT	5
3.1	Discussion	5
3.2	Drainage Design Developed by Sverdrup Corporation	6
3.3	Drainage Design Developed by BRW, Inc.	7
3.4	Coordination with the City of Phoenix	7
4.0	DESIGN CRITERIA AND PROCEDURES	7
4.1	Discussion	7
4.2	Roadway Drainage	8
4.3	Storm Drain	8
4.4	Cross Drainage	9
4.5	Retention Basins	9
4.6	Major Drainage	9
4.7	Bridge Deck Drainage	9
5.0	HYDROLOGY	10
5.1	Discussion	10
5.2	Pavement Drainage	10
5.3	Cross Drainage	10
5.4	Salt River Drainage	10
6.0	ROADWAY DRAINAGE PLANS	11
6.1	Discussion	11
6.2	Storm Drain System	11
6.3	Cross Drains	11
6.4	Retention Basins	12
6.5	Detention Basins	13
6.6	Catch Basins	14

REGISTERED PROFESSIONAL ENGINEER (CIVIL)
CERTIFICATE NO. 23663
DAVID J. SCHAUB
Date Signed 4-15-94
ARIZONA, U.S.A.

Table of Contents

CHAPTER		PAGE
7.0	MAJOR DRAINAGE PLAN	15
8.0	REFERENCES	16

List of Figures

FIGURES		PAGE
1	Location Map	2
2	Vicinity Map	3

Appendix

A – Drainage System Plan
B – Roadway Typical Sections
C – Drainage Design Criteria
D – Storm Sewer Runoff Calculations
E – Storm Sewer Hydraulic Calculations
F – Storm Sewer Inlet Calculations
G – Retention Basin Calculations
H – Cross Culvert Calculations
I – Hydraulic Charts
J – Report on the Effects of Scour

REGISTERED PROFESSIONAL ENGINEER (CIVIL)
CERTIFICATE NO. 23663
DAVID J. SCHAUB
Date Signed 4-15-94
ARIZONA, U.S.A.

1.0 Introduction

1.1 PURPOSE OF REPORT

This final drainage report has been prepared as part of the final design for the Sky Harbor Expressway, SR 153. The intent of this report is to document the assumptions and methodologies used to develop both the off-site and on-site hydrology and to design the hydraulic appurtenances for the project. Design criteria and data presented in this report have been established and used in the development of the final drainage system design.

2.0 Site Description

2.1 PROJECT LOCATION AND DESCRIPTION

Sky Harbor Expressway, SR 153, is located in Phoenix, Arizona just to the east of the Sky Harbor International Airport as shown in Figure 1. This project will result in the construction of 1.32 miles of SR 153 from University Drive north to the recently completed Segment 8B located approximately 1000-feet north of Sky Harbor Boulevard as shown in Figure 2.

Complete 100 percent construction plans were prepared for this segment of SR 153 on a different alignment across the Salt River. These plans need to be re-designed for the realignment of the portion of SR 153 from Sky Harbor Boulevard to a point 1000-feet south of the Salt River. The final plans and construction documents will be a combination of the existing documents and the redesign documents including redesigned drainage facilities as depicted in this report.

The realignment project was requested by the City of Phoenix Aviation Department to provide additional developable land adjacent to the airport. The selected alignment is one of three alignment schemes evaluated in a reconnaissance study funded by the City of Phoenix Aviation Department. The selected plan moved the SR 153 alignment east towards the Hohokam Expressway, meeting the existing SR 153 construction on the north and tying into the presently designed alignment on the south at a point approximately 1000 feet south of the Salt River levee. The new alignment places the SR 153 Sky Harbor Expressway Bridge 300 feet west of the existing SR 143 Hohokam Expressway Bridge, a realignment of 580 feet to the east.

2.2 TOPOGRAPHIC FEATURES AND EXISTING DRAINAGE FEATURES

The proposed project crosses the recently channelized Salt River, which is bounded by cement stabilized alluvium levees and flows toward the west. In general, storm water runoff from north of the river flows south toward the river and storm water runoff from south of the river flows north toward the river. Overland flow from both north and south of the river currently ponds on the land side of the levees, which have no openings through them.

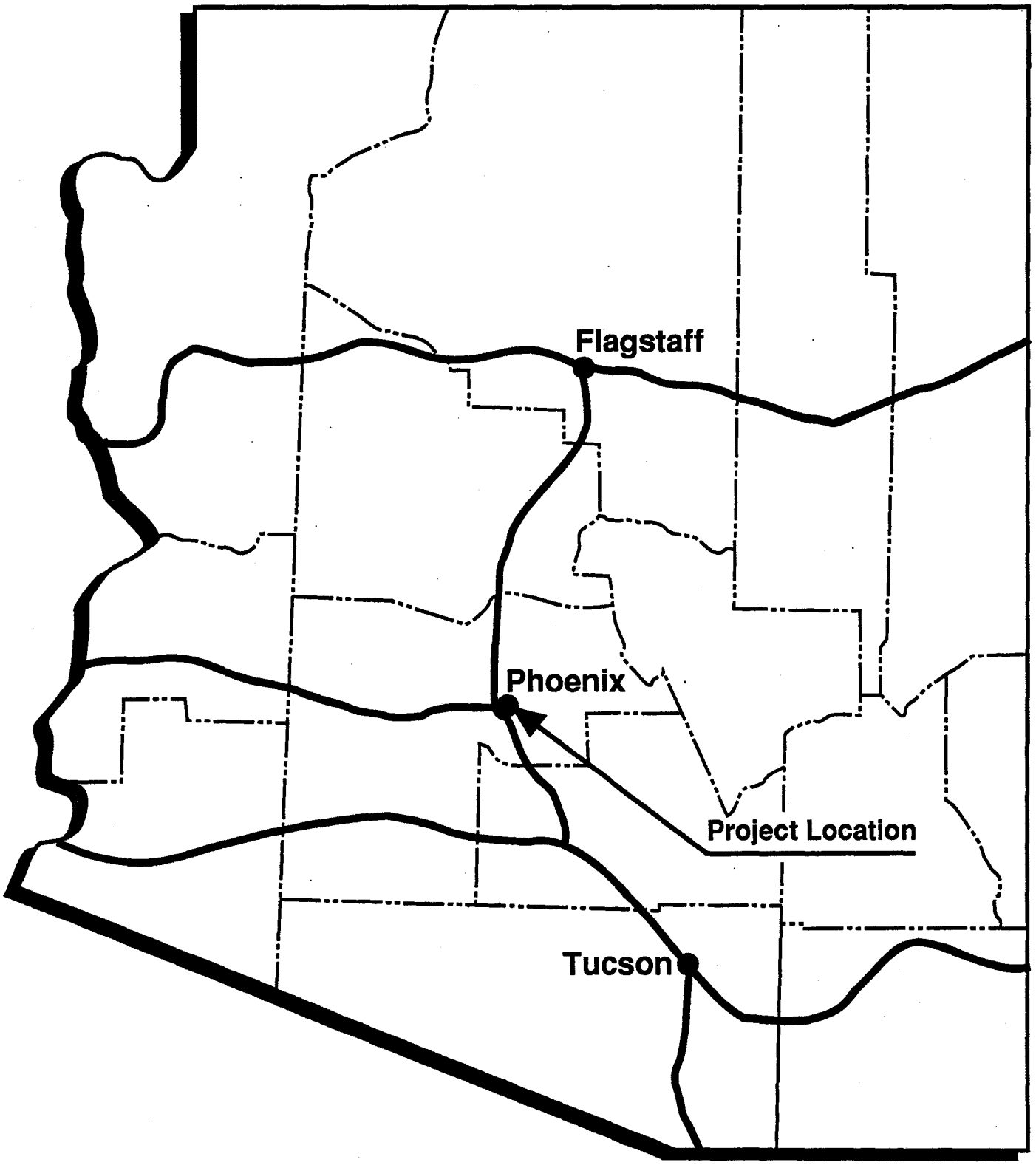

SR 153
SKYHARBOR EXPREESWAY

Project Location

Figure 1

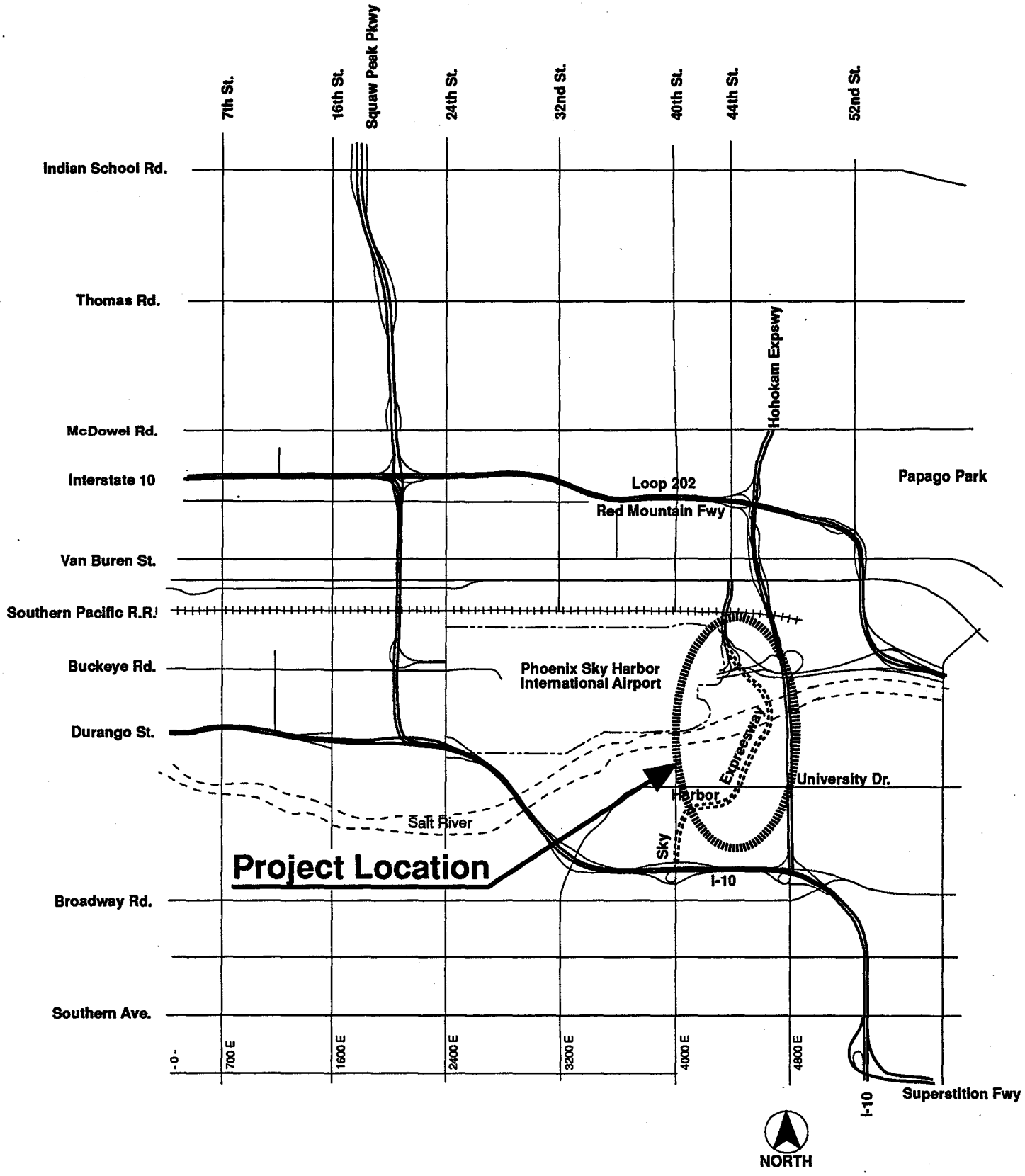

SR 153
SKYHARBOR EXPREESWAY

Vicinity Map

Figure 2

North of the river, an extensive drainage system has been installed with the construction of Sky Harbor Boulevard and that portion of SR 153 north of Sky Harbor Boulevard. This system consists of two major storm drains, numerous small storm drains, and six retention basins. One major storm drain is discharged to the Salt River, the other is discharged to the Hohokam Retention Basin and the numerous small storm drains are discharged to five retention basins of which three are interconnected.

North of Air Lane, the area drains north into the sump under the Southern Pacific Rail Road Bridge. The existing pump station lifts the storm water runoff into an existing 78-inch outlet pipe, which flows directly to the Salt River. A flap gate has not been installed at the river discharge point and therefore the 78-inch storm drain operates in a pressure flow condition during large storm events, such as the combination of a regional storm event on the Salt River and a local design storm event. Other pipes have not been connected into the 78-inch pipe in its 4200-foot length between the pump station and the river outfall.

South of Air Lane to Sky Harbor Westbound, a major portion of the area drains into the other major storm drain system, which ranges in size from 24 to 42-inches. It discharges into the Hohokam Retention Basin (Retention Basin No. 6), which is located within the loop ramp that connects both Sky Harbor Eastbound and Westbound with the Hohokam Expressway Southbound. The remaining portion of the area is captured by numerous small storm drain systems that drain to one of five retention basins, which were located between the ramps and roadways based on the previously approved alignment.

Subsequent to the construction of the Hohokam Retention Basin, water has been continuously observed within the basin. In May of 1993, the water level was observed to be ten feet deep at the storm drain discharge end. Higher water levels have been visually observed but not measured during the wet 1992/1993 winter season.

South of Sky Harbor Westbound to the Salt River, a roadway fill has been constructed along the previously approved alignment; blocking flow between the two sides, except for one cross pipe. Flow is from east to west through an off-road catch basin and 24-inch pipe, which is located approximately 350-feet south of Sky Harbor Westbound. In general, the storm water runoff will pond within low spots along both sides of this roadway fill, because there is no outlet to the Salt River.

South of the river, the existing drainage system between University Drive and the river consists of street flow, overland flow, natural retention areas, and a combination ditch/pipe system that discharges some of the runoff into the Salt River. An existing City of Phoenix storm drain system located along University Drive collects and conveys the storm water runoff to the west.

North of University Drive to approximately the east-west power line, a portion of the storm water runoff is collected by streets and ditches and conveyed to a 48-inch storm drain, which outlets to the Salt River west of the proposed SR 153 alignment. This system begins as an open ditch near the Magnolia/45th Street intersection and enters an underground drainage system approximately 400 feet to the north. At the east-west power line, two drainage pipes from the east discharge into this system. Storm water runoff not collected by this system flows overland south past the east-west power line.

North of the east-west power line to the Salt River, storm water runoff collects in numerous natural low spots located along the south side of the Salt River levee. The ponded runoff originates from south of the east-west power lines, from within this area, and from a 36-inch pipe culvert located under the Hohokam Expressway. There is no outlet to the river for this storm water runoff.

South of the Salt River, 1200 feet of roadway fill has been constructed along the previously approved alignment blocking the flow between the two sides, except for one cross pipe. Flow is from east to west through a 36-inch pipe, which is located approximately 550 feet south of the Salt River levee. This pipe was installed to equalize the water that will pond on both sides of the roadway fill during extreme storm events.

2.3 PRESENT DEVELOPMENT

North of the river, the land is currently bare within the project limits. South of the river, industrial development has occurred on the land along University Drive and on most of the privately owned land located from the proposed Sky Harbor Alignment east to the Hohokam Expressway and from University Drive north to Hilton Avenue. Two landfills exist to the west of the proposed alignment with some City of Phoenix owned vacant land in between. The City of Phoenix also owns the vacant land located between the proposed Sky Harbor Alignment and the Hohokam Expressway and between Hilton Avenue and the Salt River. Construction will not affect the existing landfills.

2.4 FUTURE DEVELOPMENT

The main purpose of this project is to increase the land area available for future airline facilities by maximizing the area bounded by Sky Harbor Boulevard on the north and the Salt River on the south, and by the proposed Sky Harbor Expressway Alignment on the east and the Sky Harbor International Airport on the west. Access will also be provided to the smaller area bounded by Sky Harbor Boulevard on the north and the Salt River on the south, and by the proposed Sky Harbor Expressway Alignment on the west and the Hohokam Expressway on the east. This area will also be used for future airline facilities.

South of the river, the future development of the privately owned vacant land is assumed to be industrial, which is its current zoning. A new City of Phoenix water booster pump station will be constructed on vacant city land located approximately 600 feet south of the river between the proposed Sky Harbor Expressway Alignment and the Hohokam Expressway. Stockpiled material located to the south of the site will be used to raise the site elevation above potential storm water levels. Current site plans show finished elevations greater than or equal to 1132.0.

3.0 Drainage Design Development

3.1 DISCUSSION

Development of the drainage design for this project required reviewing and evaluating two SR 153 projects previously designed by the Sverdrup Corporation. One has been constructed and the other is the project that BRW is currently redesigning with the development of this drainage report. Further discussions on the drainage design for this

project are contained in this Section under the headings of Drainage Design Developed by Sverdrup Corporation, Drainage Design Developed by BRW, Inc., and Coordination with the City of Phoenix.

3.2 DRAINAGE DESIGN DEVELOPED BY SVERDRUP CORPORATION

Sverdrup Corporation has completed design and construction documents for two SR 153 projects that are pertinent to this project. The first design project known as Segment 8B was completed in 1990 and constructed shortly thereafter, and the second design project known as Segment 8C was completed in 1992, but not constructed. The Segment 8B project resulted in the construction of most of the existing roadway and drainage features located north of the river that are pertinent to the current project. The Segment 8C project is being redesigned by the current project on a new alignment across the Salt River. Drainage designs completed by the Sverdrup Corporation are contained in documents as follows:

- SEGMENT 8B
  - Construction Plans: Phoenix Urbanized Area, Sky Harbor Access Road (SR 153), RAM-601-0-501, 153 MA 001, Sky Harbor (Sky Harbor Blvd-44th ST), 24 July 1990.
  - Drainage Report: "Final Storm Drainage Report and Calculations of Proposed Phoenix Urbanized Area," SR 153, Segment 8B, Maricopa County, RAM-601-0-501, Tracs No. H 0881-01C, July 1990.
- SEGMENT 8C
  - Construction Plans: Phoenix Urbanized Area, Sky Harbor Access Road (SR 153), RAM-601-0-501, 153 MA 003, Sky Harbor (University Dr-Sky Harbor), 9 June 1993.
  - Drainage Report: "Final Drainage Report and Calculations for Segment 8C," SR 153, Maricopa County, Project No. RAM-601-0-501, TRACS No. H 0881 01C, Contract No. 87-62, September 1992.

A general discussion of the drainage facilities constructed with the Segment 8B project is contained in Subsection 2.2 of this report. The drainage facilities designed for Segment 8C will be incorporated into the current redesign project without changes where possible. An initial assessment of the Segment 8C drainage plans resulted in a list of plans that can be used without changes as follows:

- University Drive Drainage Plan, Station 14+00 to Station 26+50
- Forty-Fourth Street Drainage Plan, Station 46+50 to Station 50+00

Plans that have been modified or completely redesigned are discussed under the next Subsection.

3.3 DRAINAGE DESIGN DEVELOPED BY BRW, INC.

As stated earlier, the general overall original drainage concept has been maintained in the BRW drainage redesign required by the proposed realignment of SR 153. The realignment will require excavating the stockpiled roadway embankments that have been placed both north and south of the Salt River. This material will be used to construct the roadway embankments on the SR 153 realignment. Drainage facilities that will need to be redesigned or added are located along SR 153 from approximately Station 61+10.69 to Station 137+65.96. Changes or modifications to the existing drainage facilities are discussed in Section 5.

3.4 COORDINATION WITH THE CITY OF PHOENIX

Development of the drainage facilities for this project needs to account for the intended use of City owned land located immediately north and south of the Salt River. Coordination with the City of Phoenix after the 30% plan submittal resulted in design decisions on two critical drainage features as follows:

- Existing 36-Inch pipe Under the Hohokam Expressway (SR 153, Station 96+00 RT): This report proposes to extend the existing 36-inch pipe through the City of Phoenix proposed new water booster pump station to discharge into new Retention Basin No. 7 located east of the SR 153 realignment. Overflow from the retention basin will flow west under SR 153 through a 36-inch cross pipe into a natural retention basin. This solution was selected over the solution of continuing the pipe extension under the SR 153 embankment, because it eliminates the need for two inverted siphons. The continuous pipe extension alternative would require one siphon under the existing 60-inch water line located along the east side of SR 153 and another siphon under the proposed new storm drain to be located along the west side of SR 153.
- New Catch Basins and Embankment Downdrain Pipes, East Side of SR 153, Salt River North to Station 125+00: SR 153 pavement runoff will be captured by new catch basins, discharged to the east side of the SR 153 embankment with downdrain pipes, and collected in existing low spots. The water will collect in the area bounded by Sky Harbor Boulevard on the north and the Salt River on the south, and by the proposed Sky Harbor Expressway Alignment on the west and the Hohokam Expressway on the east. There is no outlet to the Salt River for this runoff and it is assumed that future development of this land will require the construction of an appropriately sized retention basin.

4.0 Design Criteria and Procedures

4.1 DISCUSSION

Under the previous design project, drainage design criteria and procedures were developed for this project's roadway drainage system. These same criteria and procedures will be employed in designing revisions to the proposed drainage system. A summary of these criteria and procedures is contained in Appendix C, Drainage Design Criteria. Further general discussions on drainage design criteria are contained in this Section under the headings of Roadway Drainage, Storm Drainage, Cross Drainage, Retention Basins, Major Drainage, and Bridge Deck Drainage.

4.2 ROADWAY DRAINAGE

SR 153 will be a six-lane, divided highway with on/off ramps to Sky Harbor Boulevard and University Drive. All roadways and ramps will have curb & gutter or barrier curb, which will require catch basins to capture the storm water runoff. The catch basin system was designed to capture the ten-year storm event in non-depressed roadway segments and the fifty-year storm event in depressed roadway segments.

These proposed plans will create a vacant area located between the on/off ramps at University Drive for a distance of 1400 feet to the north of University Drive. A portion of this area will function as a detention basin until the construction of the final SR 153 crossing of University Drive including the pavement drainage system.

The selected locations for the new catch basins were based on new roadway profiles, catch basin spacing required to maintain water spread on the pavement below maximum allowable, near superelevation crossover points to minimize sheet flow across the pavement, at gore ends to prevent storm water runoff from flowing out and across the main line or ramp pavements, and at the low point in sag areas. Storm water interception will be accomplished with freeway type catch basins, such as grate & slotted drain combination for both rolled curb & gutter and half barrier sections, with curb-opening catch basins along city streets, such as University Drive, and with grate catch basins at off-road locations and at other locations as necessary. Local gutter depressions will be 2" on local streets and zero on the Sky Harbor Expressway roadways.

Catch basin spacing and pavement spread calculations for new or modified catch basins were determined by employing the Hydraulic Engineering Circular No. 12, "Drainage of Highway Pavement," FHWA, March 1984. The actual calculations were completed by a computer program obtained from McTrans Center for Microcomputers in Transportation, University of Florida, Gainesville, Florida.

4.3 STORM DRAIN

All new and modified storm drain systems were sized to handle the flows generated by the catch basin calculations. Flow rates will be computed by the Rational Method, which requires determining the time of concentration. A review of the existing drainage design indicates that the small drainage basin sizes along with short pipe lengths will result in times of concentration less than 10 minutes. Therefore, the minimum time of concentration of ten minutes , as required by ADOT design procedures, was used to determine design peak storm water runoffs.

The previously designed storm drain system limited the minimum storm drain pipe sizes to 18-inch diameter for pipes less than 100 feet in length and serve only one catch basin, and to 24-inch diameter for the mainline and connector pipes over 100 feet in length or serving two or more catch basins. Current Arizona Department of Transportation criteria is to use a minimum pipe size of 24-inches unless constrained by existing conditions, such as shallow utilities. Proposed 18-inch storm drain pipes were not increased in size unless a change in the drainage system required a redesign of these pipes. The previous design also extended existing 15-inch laterals in kind to proposed new catch basins along University Drive.

Pipe sizes were based on full flow condition for a 10-year storm event, except in depressed areas where a 50-year storm event will be used.

The SR 153 main storm drain system located from University Drive north to its discharge into the Salt River was analyzed for the following two conditions:

1. A 100-year local storm event with the 10-year regional storm event tailwater in the Salt River Channel. No storm water will be allowed to back up into the Sky Harbor Associates' development. This design will minimize flooding of the area south of the river during the local 100-year storm event.
2. A 10-year local storm event with the 10-year regional storm event tailwater in the Salt River Channel. Maintain the hydraulic grade line 0.5 feet below the top of the catch basin grates located on SR 153 and Ramps "C" and "D".

Storm sewer pipe sizes and the hydraulic grade line were determined with a computer program. STORM SEWERS, Version 7.0S, is a computer program that designs and analyzes any new and existing storm sewer system for non-uniform flow, and the hydraulic grade line (HGL). STORM SEWERS is a registered trademark of Engineering Data Systems Corporation, 4131 Westmark Drive, Dubuque, Iowa, 52002.

4.4 CROSS DRAINAGE

Required permanent cross drainage structures were designed to pass the 50-year storm event runoff with the maximum headwater elevation two feet below the lowest appropriate gutter elevation. ADOT accepted hydrology methods were employed to determine the peak runoffs.

4.5 RETENTION BASINS

Retention basins were sized to capture the runoff from a 100-year storm event with a 24-hour duration on the entire runoff area that empties into the basin. This design will minimize flooding of Sky Harbor Boulevard and associated ramps during the local 100-year storm event.

Off-site areas where storm water will pond against the roadway embankments were treated as retention basins. Some storm water runoff will flow outside the right-of-way and be trapped behind the Salt River Levees both north and south of the river.

4.6 MAJOR DRAINAGE

The major drainage feature on this project is the Salt River, which was recently channelized with another construction project. The channelization project was analyzed and designed by DMJM and Simons, Li & Associates Inc. with the results documented in a report entitled, "Concept Design Report for Salt River Channelization", dated May 1988.

4.7 BRIDGE DECK DRAINAGE

Where possible, deck drains or catch basins will not be installed in the bridge decks to eliminate future maintenance problems. Instead, catch basins will be installed in the roadway

just off the bridge ends. Since the mainline roadway will have curb and gutter or half–barrier and some bridges were rather short it will not be necessary to install catch basins at the very end of all bridges.

Deck drains will need to be installed on the SR 153 Salt River Bridge. Two sets of three ADOT standard deck drains will be centered over each pier at the west roadway edge and one set will be located near each abutment at the west roadway edge. The drains will be placed at 10–foot spacings with a minimum 10–foot distance between the outer drain and the pier or abutment. Capacity and pavement spread calculations were performed to check compliance with ADOT design standards.

5.0 Hydrology

5.1 DISCUSSION

The hydrology for this project has been determined based on the Arizona Department of Transportation's established procedures as outlined in the previous drainage report for this project. Further discussions on project hydrology are contained in this Section under the headings of Pavement Drainage and Off–Site Drainage.

5.2 PAVEMENT DRAINAGE

Detailed analyses of pavement runoff rates and pavement spread were performed based on roadway geometrics and vertical alignment. The peak runoffs were based on contributing pavement area and off–site drainage basins, where applicable. The Rational Method with a minimum time of concentration of 10 minutes and a 10–year storm event were used to determine the peak runoffs. In depressed roadway segments, a 50–year storm event was used to determine the peak runoffs. Selected rainfall intensities used for the 10–year and 50–year storm events are 4.3 inches/hour and 6.2 inches/hour, respectively.

5.3 CROSS DRAINAGE

An existing 36–inch diameter pipe culvert will continue to drain storm water runoff from the east side of the Hohokam Expressway, through the new Retention Basin No. 7, under new SR 153 through a new 36–inch diameter pipe culvert and into an existing natural retention area.

5.4 SALT RIVER DRAINAGE

Previous studies have determined that peak flows within the Salt River for three regional storm events are as follows:

STORM EVENT	PEAK DISCHARGE
Super Flood	289,000 cfs
100–year	215,000 cfs
10–year	93,000 cfs

These peak flows were determined assuming no improvements to the Roosevelt Dam. Currently, improvements being made to the Roosevelt Dam will result in lower peak discharges in the foreseeable future.

6.0 Roadway Drainage Plan

6.1 DISCUSSION

A drainage plan incorporating both previous designed drainage facilities and new or modified drainage facilities has been developed to handle both roadway drainage and off-site drainage. Half-size copies of these plans are contained in Appendix A, Drainage System Plan. Roadway sections used in the development of this plan are contained in Appendix B, Roadway Typical Sections. Further discussions on redesigned drainage facilities are contained in this Section under the headings of Storm Drain System, Cross Drains, Retention Basins, and Catch Basins.

6.2 STORM DRAIN SYSTEM

The storm drain systems requiring redesign or modifications are as follows:

- Storm Drain System, University Drive north to the Salt River: This storm drain system is designed to collect both off-site and on-site storm water runoff and convey it to an outlet into the Salt River. The SR 153 realignment requires the realignment and redesign of approximately 2330 feet of main storm drain from Station 61+11, University Drive, to Station 98+97, Salt River outlet. This redesign resulted in a larger storm drain pipe because the outlet point has been moved approximately 470 feet upstream resulting in a longer storm drain with a flatter gradient and a higher tailwater elevation on the Salt River. A flap gate will be installed at the discharge end to prevent backflows from the Salt River.
- Storm Drain System, Ramp NW, Station 13+50 to Station 14+08: This storm drain system is designed to collect storm water runoff from both embankment and pavement, and to discharge into a existing storm drain located at Station 14+08, LT. The existing storm drain discharges to existing Retention Basin No. 6. Because of the existing storm drain flow line elevation, it was necessary to use 18" pipes for the new storm drain to provide adequate cover under Ramp NW.
- Storm Drain System, Ramp A, Station 13+01 to Station 13+50: This storm drain system is designed to collect pavement runoff and discharge it into an existing storm drain located at Station 13+01 LT. The existing storm drain discharges to existing Retention Basin No. 6.

6.3 CROSS DRAINS

Additional cross drains and cross drains that required redesign or modifications are as follows:

- Existing 36-Inch Cross-Pipe, SR 153, Station 89+85 LT: This pipe is designed to convey storm water runoff east to west under the SR 153 embankment and to equalize ponded water between the east and west sides of SR 153 during extreme storm events. Natural low spots occur on both sides of SR 153 with no outlets to the river. The realignment of SR 153 will place this pipe in the wrong location and it will need to be removed and salvaged. The next drainage item is its replacement.

- New 36-Inch Cross-Pipe, SR 153, Station 93+00: This pipe is the replacement for the existing cross-pipe at Station 89+85 LT. It will equalize the flow from the new Retention Basin No. 7 located east of SR 153 and the natural retention area located west of SR 153. A new outlet channel may be required to convey the pipe discharge to the natural retention area.

- Extend Existing 36-Inch Pipe, SR 153, Station 95+28 RT West to Retention Basin No. 7: The existing 36-inch pipe that crosses the Hohokam Expressway will be extended as a 48-inch pipe to discharge into new Retention Basin No. 7. Construction of the proposed City of Phoenix Pump Station near the discharge end of the existing 36" pipe creates the need for this extension in order to provide a positive outfall to the west. Pipe No. 171 is positioned to miss proposed facilities within the proposed City of Phoenix Pump Station Site.

6.4 RETENTION BASINS

Additional retention basins and existing retention basins that required redesign or modifications are as follows:

- Existing Retention Basin No. 1, Ramp ES, Station 20+00 RT: This retention basin, which is located between Ramp ES and Sky Harbor Westbound, will be expanded as necessary to provide as much storage as possible for any additional storm water runoff produced by the realignment of SR 153. The computed 100-year, 24-hour water surface elevation is 1112.0 MSL.

- Existing Retention Basin No. 2, Ramp ES, Station 22+00 LT: This retention basin, which is located between Ramp ES and Sky Harbor Eastbound, will be reshaped as necessary to provide as much storage as possible. The computed 100-year, 24-hour water surface elevation is 1112.0 MSL.

- Existing Retention Basin No. 3, SR 153, Station 132+00 LT: This retention basin, which is located within the triangular area created by SR 153, Sky Harbor Eastbound and Ramp SW, Will be expanded as necessary to provide storage for any additional storm water runoff produced by the realignment of SR 153. The computed 100-year, 24-hour water surface elevation is 1112.0 MSL.

- Existing Retention Basin No. 4, SR 153, Station 127+00: This retention basin, which is located on the realignment of SR 153 between Sky Harbor Eastbound and Westbound, will be filled with roadway embankment and abandoned. Meeting this design project's goal, maximizing developable land adjacent to the airport, required placing the realigned SR 153 through Retention Basin No. 4. Retention Basins Number 1, 2 and 3, which function as one retention through 24-inch pipe connections, will be enlarged where possible to provide replacement storage for the loss of Retention Basin No. 4.

- Existing Retention Basin No. 5, NB Airlane, Station 23+00 LT: This retention basin, which is located within the triangular area created by the northbound and southbound lanes of Airlane, will not be affected by this construction contract.

- Existing Retention Basin No. 6, Loop Ramp "WS": This retention basin, which is located within the loop ramp for the Sky Harbor westbound to Hohokam southbound traffic, will be partially filled to eliminate the continuously exposed water surface.

Recent heavy rains have created a perpetual pond due to a perched water table. The City of Phoenix Aviation Department has requested that the pond be partially filled to eliminate its attraction for birds, which collide with airplanes using the airport runway.

Retention Pond No. 7 will be filled with approximately 31600 cubic yards of granular material to an elevation of 1108.00. A small pond will remain at the 42" inflow pipe, which has a flow line elevation of 1101.72. The size of the remaining pond will be minimized and the sideslopes stabilized with 3:1 riprap slopes. Pertinent design data for the remaining retention basin are:

- 100-year, 24-hour runoff volume = 11.09 acre-feet
- 100-year, 24-hour water surface elevation = 1111.1
- One-foot freeboard is maintained in the lowest catch basin during a runoff volume equal to 1.5 times the 100-year, 24-hour runoff volume.

- Retention Basin No. 7, SR 153, Station 95+00 RT: This new retention basin will be constructed to replace a natural retention area that will be filled in with the realignment of SR 153. The completed 100-year, 2-hour water surface elevation is 1120.7 MSL and the 100-year, 24-hour water surface elevation is 1126.71. At an elevation of 1122.60 MSL, a 36" RCP equalizer pipe will begin to direct flow to the west and the water surface elevation will never reach 1126.71. During the 10-year design peak runoff, the stage will reach 1119.2 MSL.

6.5 DETENTION BASINS

Two detention basins designed for this project are:

- Detention Basin No. 1, Ramp C, Station 14+00 to Station 19+50 LT: This detention basin, which is located along the west side of Ramp C and just north of Magnolia Street, will receive storm water runoff from lands to the west and from some of the Ramp C and SR 153 pavements. The basin will be discharged to the Salt River through an existing City of Phoenix drainage system. Pertinent design data for the detention basin are:

  - 100-year, 24-hour runoff volume = 2.0 acre-feet
  - 100-year, 24-hour water suface elevation = 1123.65
  - Ramp C low pavement elevation = 1124.85
  - Freeboard at Ramp C is 1.20 feet

- Detention Basin No. 2, SR 153, Station 62+00 to Station 72+00 LT: This temporary detention basin, which is located between Ramps C and D within an area of future SR 153 fill, will receive storm water runoff from the earthern median and some Ramp C pavement. It is connected to Detentin Basin No. 1 with a 24" pipe and therefore, it will reach an equalized 100-year, 24-hour water surface elevation of 1123.65. Future filling of this detention basin will not raise the calculated 100-year water surface elevation, because it was determined assuming all flow into Detention Basin No. 1.

6.6 CATCH BASINS

Additional catch basins and existing catch basins that required redesign or modifications are as follows:

- Existing 18-Inch Pipe and Catch Basin, Sky Harbor Eastbound, Station 34+00 LT: This pipe and Catch basin discharges pavement runoff from Sky Harbor Eastbound into Existing Retention Basin No. 4. The abandonment of Retention Basin No. 4 will require a new discharge point for this catch basin. A new 24-inch discharge pipe will be installed to the west along the south side of Sky Harbor Eastbound to discharge into reshaped existing Retention Basin No. 2. The new pipe will be approximately 390 feet long and require the construction of two new manholes and one prefabricated 45 degree bend.

- New Catch Basins for SR 153 Pavement, South of Salt River to University Drive: Existing and new catch basins were evaluated and spaced based on the Arizona Department of Transportation's current Drainage Design Standards. The main storm drain system follows the same general layout as previously designed for the segment of SR 153 from University Drive to the Salt River. However, profile changes required placing most catch basins at new locations. All catch basins, except CB No. 107, will be discharged to a main storm drain that will begin at Univesity Drive and flow north to discharge into the Salt River. A flap gate will be installed at the discharge end to prevent backflow from the Salt River.

  In addition, two drainage designs were developed for the median area between University Drive and Station 75+00. For current construction, this area will function as a detention basin with runoff originating from the median area and a portion of the Ramp C pavement. For future construction when SR 153 is continued south to I-10, catch basins will be installed to capture the SR 153 pavement runoff and convey it to the appropriate storm drain system. The drainage system to be constructed with the current project was designed to be easily modified to accommodate the future drainage system.

- New Catch Basins for SR 153 Pavement, North of Salt River to End of Project, Station 137+65.96: New catch basins were evaluated and spaced based on the Arizona Department of Transportation's current Drainage Design Standards. From the Salt River to Sky Harbor Eastbound, the new catch basins will be discharged east to the open land between the Sky Harbor Expressway and the existing Hohokam Expressway. North of Sky Harbor westbound, catch basins No. 130 and 131 will be discharged to Retention Basin No. 3.

- New Catch Basins, Ramp NW, Station 13+50 and Station 14+08: Catch basins No. 136 and 137, located on Ramp NW, will be connected to the existing storm drain that flows to existing Retention Basin No. 6.

- New Catch Basin, Ramp A, Station 9+20: A new catch basin is depicted at this location to minimize pavement sheet flow at the superelevation crossover point. It will be discharged to the east onto an existing roadway ditch.

- New Catch Basins, Sky Harbor Westbound, Station 37+25 to Station 38+56 LT: Catch basin no. 143, located left of Sky Harbor westbound, will be connected to the existing storm drain that flows to existing Retention Basin No. 6.
- New Catch Basins, Ramp ES, Station 16+95 LT and Station 18+30 RT: Catch basins No. 138 and 139, located on Ramp ES, will be connected to the storm drain that flows to existing Retention Basin No. 1. A new catch basin is required at Station 16+95 to minimize the water spread on the pavement.
- New Catch Basin, Ramp ES, Station 22+50 approximately: Catch basin no. 140 will be placed at this location to minimize the water spread on the pavement of this ramp. It will be discharged to existing Retention Basin No. 1.

As stated earlier, the design segment north of the river covered by this report was previously designed so runoff would not be discharged to the river. Instead several retention basins were sited to capture the 100–year – 24 hour runoff. The drainage design contained in this report was based on that same premise, and all runoffs are directed to existing retention basins or vacant land. Future development of the vacant land will require the construction of additional retention basins by the land owners.

7.0 Major Drainage Plan

A major bridge crossing is required over the Salt River as part of this project. A hydraulic and scour analysis for the SR 153 realignment has been completed by Simons, Li & Associates, Inc., and documented in a separate report entitled, "Bridge Hydraulics Report, State Route 153 Crossing of the Salt River."

Using the estimated scour depths for each pier column, BRW prepared a report to document the construction measures and costs required to mitigate the anticipated scour effects at the existing Cement Stabilized Alluvium (CSA) hardbank toe–downs and at an existing sanitary sewer siphon. At the currently proposed SR 153 Bridge location, the zone of influence of local scour for the pier columns will be below both the hardbank toe–downs and the sanitary sewer siphon, which is located along the proposed bridge alignment. Total preliminary construction and design costs are estimated at $1,679,000; $372,700 for the curtain wall, and $1,306,300 for relocating the sanitary sewer to the west.

Subsequent to the report on the Effects of Scour document, BRW prepared another document on relocating the Sanitary Sewer Siphon east to an alignment between the SR 153 and SR 143 bridges. The estimated cost for a two pipe siphon system is $825,960.

BRW recommends that the CSA hardbank toe–downs be extended to an elevation below the scour zone of influence with a curtain wall (excavate and form) and that the sanitary sewer line be relocated to the east of the new SR 153 bridge. Supporting discussions on this recommendation are contained in Appendix J, Report on the Effects of Scour.

8.0 References

1. Sverdrup Corp., "Final Drainage Report and Calculations for Segment 8C," SR 153, Maricopa County, Project No. RAM-601-0-501, TRACS No. H 0881 01C, Contract No. 87-62, September 1992.

2. Sverdrup Corp., Segment 8C Construction Plans, Phoenix Urbanized Area, Sky Harbor Access Road (SR 153), RAM-601-0-501, 153 MA 003, Sky Harbor (University Dr.-Sky Harbor), 9 June 1993.

3. Sverdrup Corp., "Final Storm Drainage Report and Calculations of Proposed Phoenix Urbanized Area," SR 153, Segment 8B, Maricopa County, RAM-601-0-501, TRACS No. H 0881 01C, July 1990.

4. Sverdrup Corp., Segment 8B Construction Plans, Phoenix Urbanized Area, Sky Harbor Access Road (SR 153), RAM-601-0-501, 153 MA 001, Sky Harbor (Sky Harbor Blvd.-44th St.), 24 July 1990.

5. Howard Needles Tammen & Bergendoff, "Drainage Master Plan Report", Sky Harbor International Airport, East of Taxiway "W" to SR 143, Index No. A-88 4379 FFA, AIP No. 03-04-0029-17, November 1990.

6. Arizona Department of Transportation, Highways Division, Urban Highways Section, Design Procedures Manual, March 1988 and Revisions.

7. Arizona Department of Transportation, Highways Division, Channel Lining Design Guidelines, February 1989.

8. Arizona Highway Department, Bridge Division, Hydrologic Design for Highway Drainage in Arizona, revised March 1969.

9. Arizona Highway Department, Structures Section, Hydraulics Division, Hydrologic and Hydraulic Training Session Manual, October 16-18, 1972, revised December 1973.

10. Arizona Department of Transportation, Highways Division, Construction Standard Drawings, October 1989.

11. U.S. Department of Transportation, Federal Highway Administration, Hydraulic Design of Highway Culverts, Hydraulic Design Series No. 5, September 1982.

12. U.S. Department of Transportation, Federal Highway Administration, Drainage of Highway Pavements, Hydraulic Engineering Circular No. 12, March 1984.

13. Simons, Li & Associates, Inc., "Bridge Hydraulics Report, State Route 153, Crossing of the Salt River," January 1994.

Appendix A
Drainage System Plan

F.H.W.A. REGION	STATE	PROJECT NO.	SHEET NO.	TOTAL SHEETS	AS BUILT
9	ARIZ.	HDP-920-5(001)	121	411	
		153 MA 3			

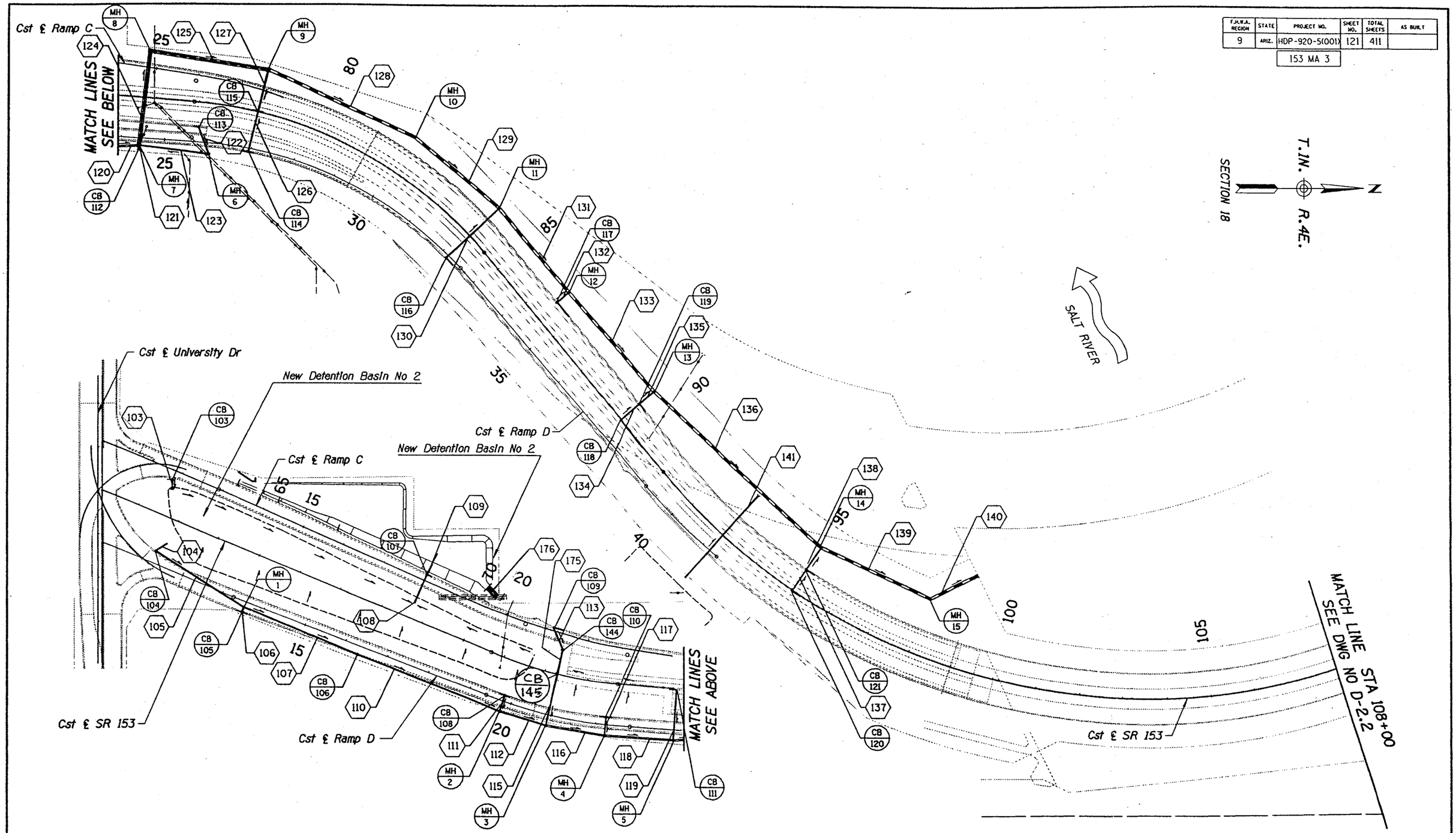

	NAME	DATE
DESIGN	GAG	3-94
DRAWN	MED	3-94
CHECKED	DJS	3-94

BRW

ARIZONA DEPARTMENT OF TRANSPORTATION
HIGHWAYS DIVISION

DRAINAGE LAYOUT
STA 61+10 TO STA 108+00

HOT FOR CONSTRUCTION

ROUTE: SR 153 | MILEPOST: 3 | LOCATION: UNIVERSITY DR. TO SKY HARBOR

DWG NO. D-2.1

cccccl53DR09.DGNcccccc
cccccSYSTIMEcccccc

VIEW NAME:

TRACS NO. H 3315 01C

A-1 OF

F.H.W.A. REGION	STATE	PROJECT NO.	SHEET NO.	TOTAL SHEETS	AS BUILT
9	ARIZ.	HDP-920-5(001)	122	411	

153 MA 3

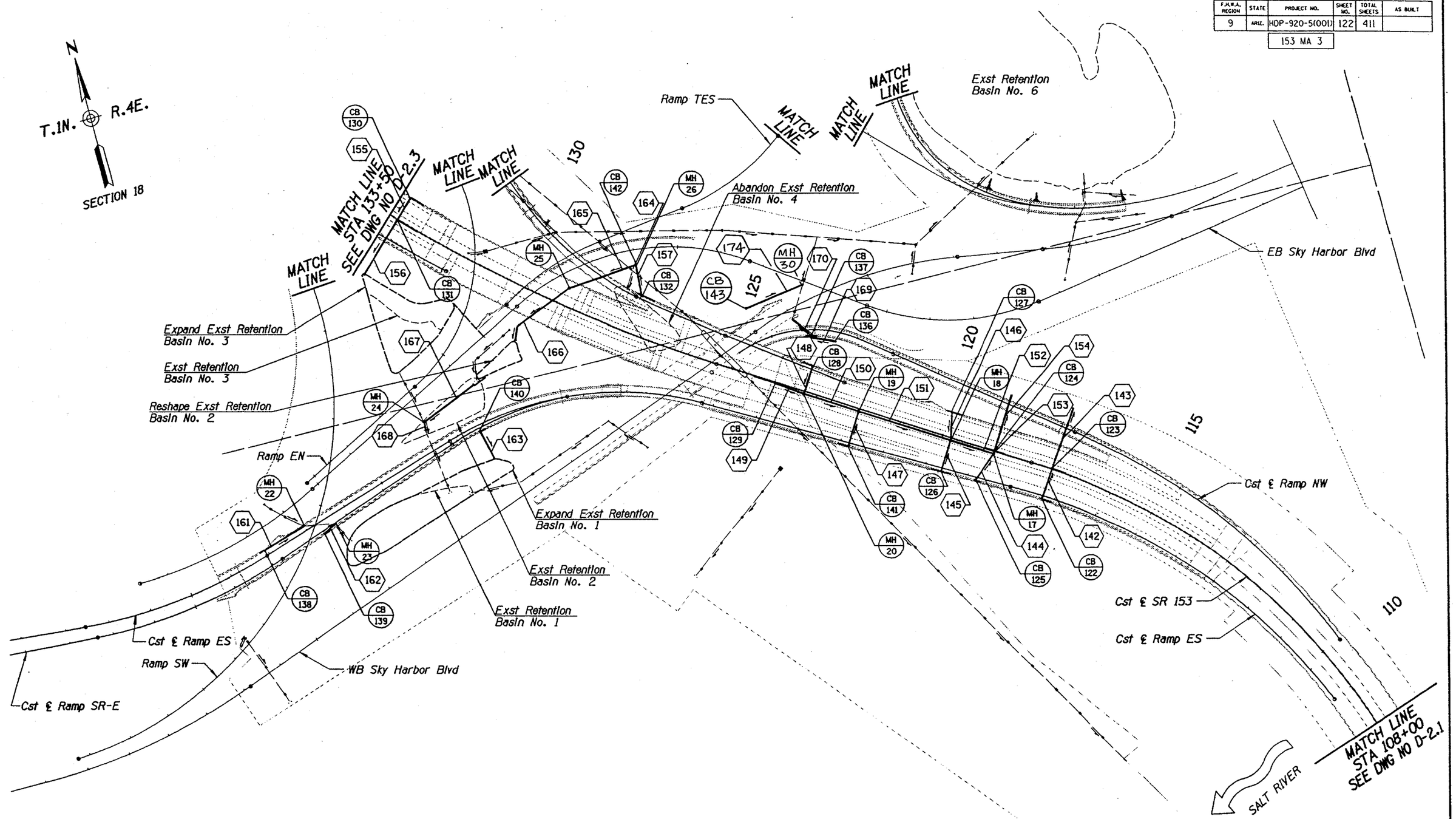

	NAME	DATE
DESIGN	GAC	3-94
DRAWN	MED	3-94
CHECKED	DJS	3-94

BRW

ARIZONA DEPARTMENT OF TRANSPORTATION
HIGHWAYS DIVISION

DRAINAGE LAYOUT
STA 108+00 TO STA 133+50

NOT FOR CONSTRUCTION

ROUTE	MILEPOST	LOCATION
SR 153	3	UNIVERSITY DR. TO SKY HARBOR

DWG NO. D-2.2

ccccc153dr010.DGNccccc
ccccSYSTIMEccccc

VIEW NAME:

TRACS NO. H 3315 01C

A-2 OF

F.H.W.A. REGION	STATE	PROJECT NO.	SHEET NO.	TOTAL SHEETS	AS BUILT
9	ARIZ.	HDP-920-5(001)	102	343	
		153 MA 3			

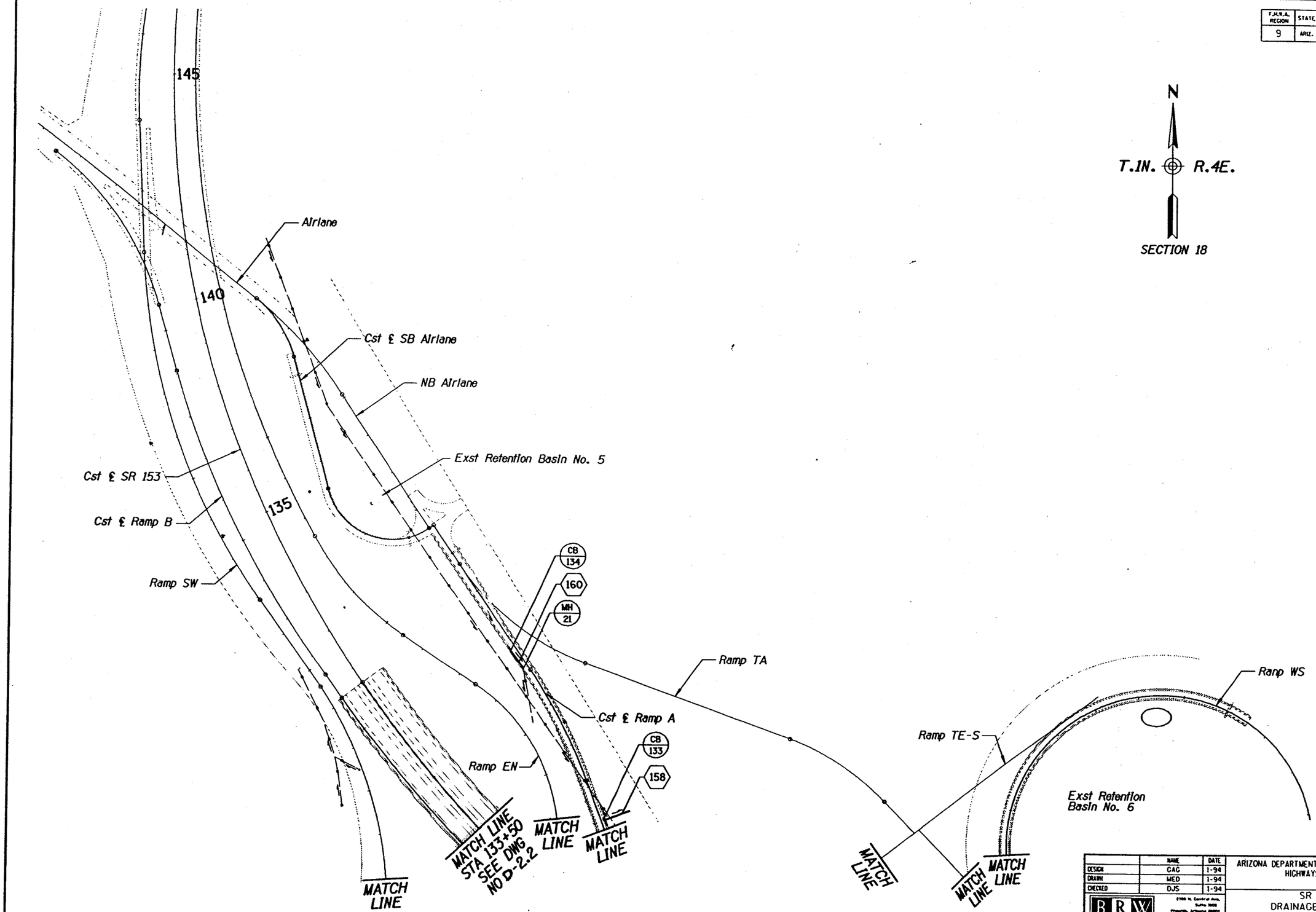

	NAME	DATE
DESIGN	GAC	1-94
DRAWN	MED	1-94
CHECKED	DJS	1-94

BRW

ARIZONA DEPARTMENT OF TRANSPORTATION
HIGHWAYS DIVISION

SR 153
DRAINAGE LAYOUT
STA 133+50 TO E.O.P.

ROUTE: SR 153 | MILEPOST: 3 | LOCATION: UNIVERSITY DR. TO SKY HARBOR

NOT FOR CONSTRUCTION

DWG NO. D-2.3

cccccc153DR11.DGNcccccc VIEW NAME:

TRACS NO. H 3315 01C

F.H.W.A. REGION	STATE	PROJECT NO.	SHEET NO.	TOTAL SHEETS	AS BUILT
9	ARIZ.	HDP-920-5(001)	103	343	
		153 MA 3			

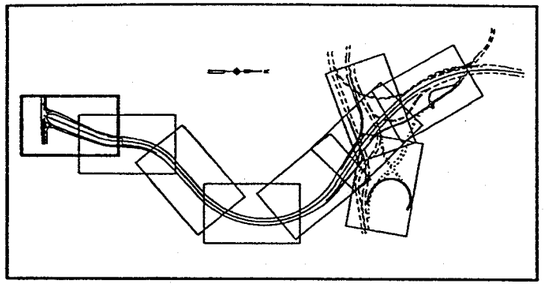

Key Map

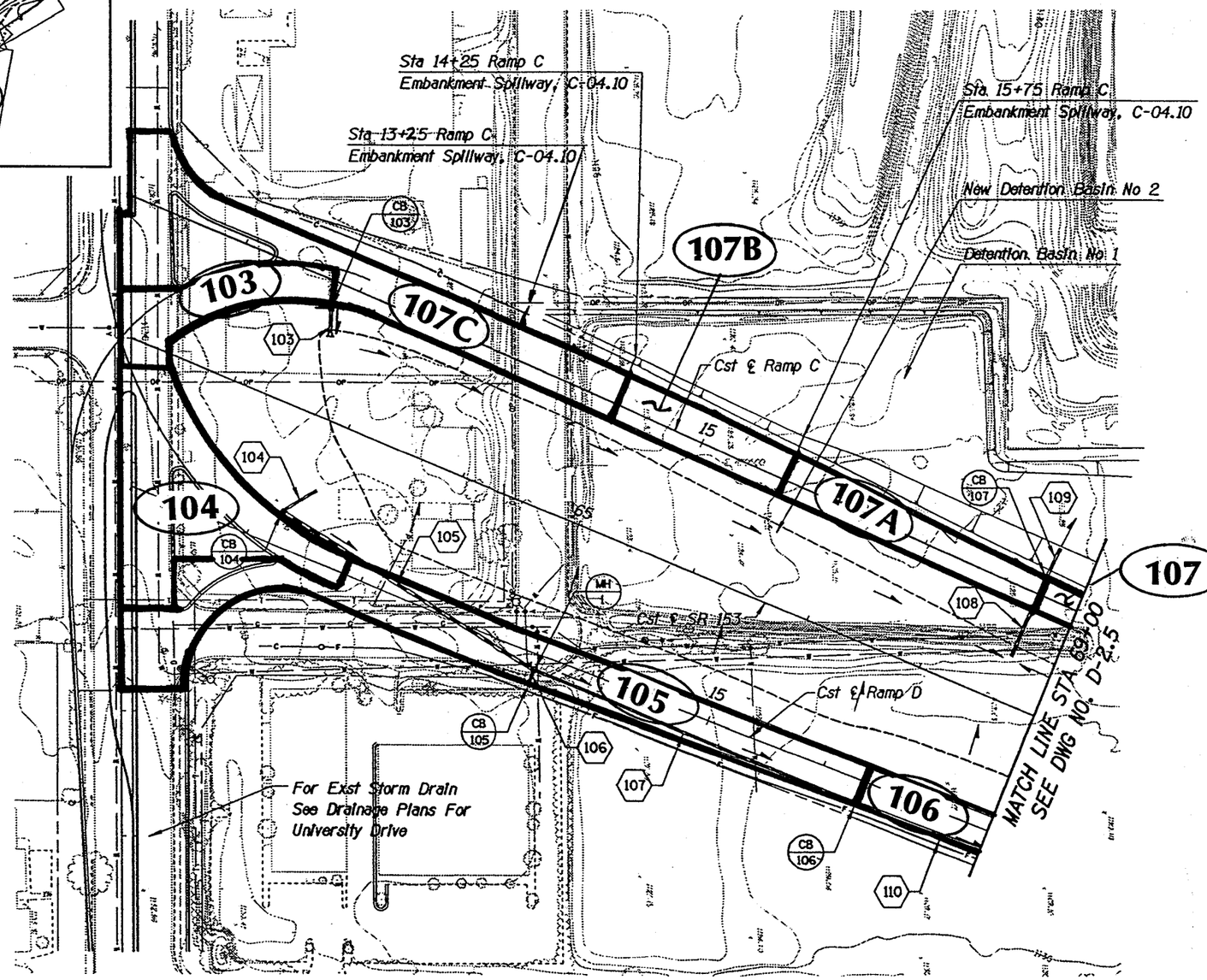

SECTION 18

T.1N. R.4E.

N

	NAME	DATE
DESIGN	GAC	1-94
DRAWN	DCD	1-94
CHECKED	DJS	1-94

BRW

ARIZONA DEPARTMENT OF TRANSPORTATION
HIGHWAYS DIVISION

SR 153
DRAINAGE PLAN
STA 61+10.69 TO STA 69+00

NOT FOR CONSTRUCTION

ROUTE	MILEPOST	LOCATION
SR 153	3	UNIVERSITY DR. TO SKY HARBOR

DWG NO. D-2.4

cccccc153DR01U.DGNcccccc
ccccccSYSTIMEcccccc

VIEW NAME:

TRACS NO. H 3315 01C

A-4

___ OF ___

F.H.W.A. REGION	STATE	PROJECT NO.	SHEET NO.	TOTAL SHEETS	AS BUILT
9	ARIZ.	HDP-920-5(001)	104	343	
		153 MA 3			

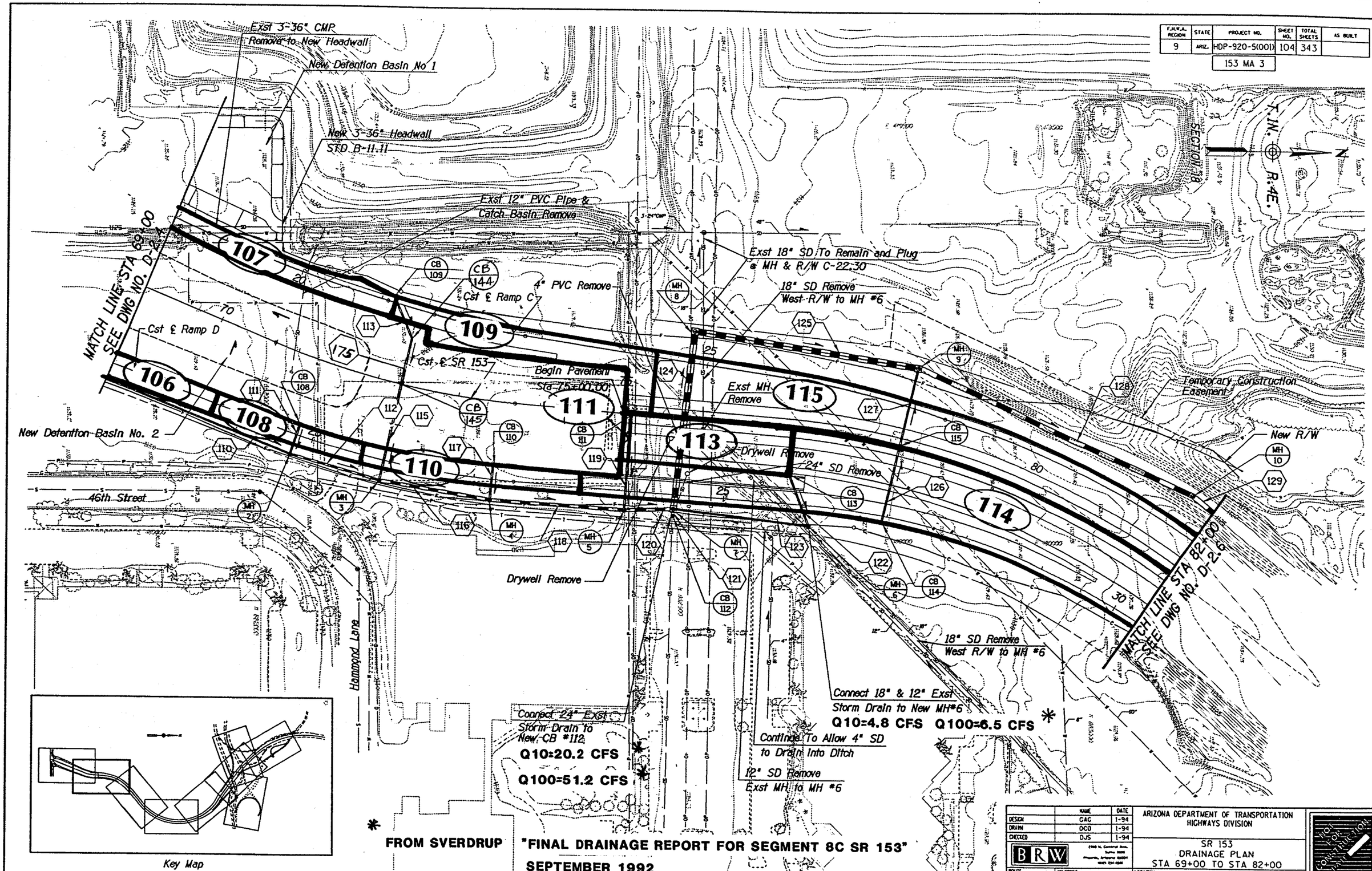

* FROM SVERDRUP "FINAL DRAINAGE REPORT FOR SEGMENT 8C SR 153"
SEPTEMBER 1992

	NAME	DATE
DESIGN	GAG	1-94
DRAWN	DCO	1-94
CHECKED	DJS	1-94

BRW

ROUTE: SR 153 | MILEPOST: 3

ARIZONA DEPARTMENT OF TRANSPORTATION
HIGHWAYS DIVISION

SR 153
DRAINAGE PLAN
STA 69+00 TO STA 82+00

LOCATION: UNIVERSITY DR. TO SKY HARBOR

NOT FOR CONSTRUCTION

DWG NO. D-2.5

TRACS NO. H 3315 01C

A-5 OF

cccccl53DR01.DGNcccccc
cccccSYSTIMEcccccc

VIEW NAME:

SHEET NO.	FINISHED PLANS	REVISIONS	LOCATION	DATE

F.H.W.A. REGION	STATE	PROJECT NO.	SHEET NO.	TOTAL SHEETS	AS BUILT
9	ARIZ.	HDP-920-5(001)	103	343	

153 MA 3

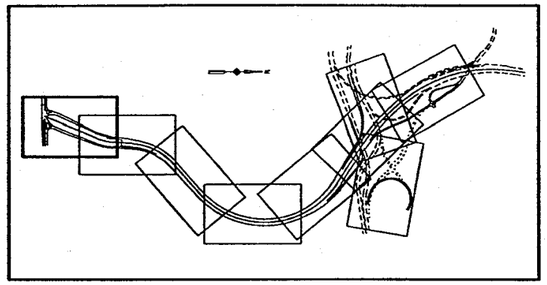

Key Map

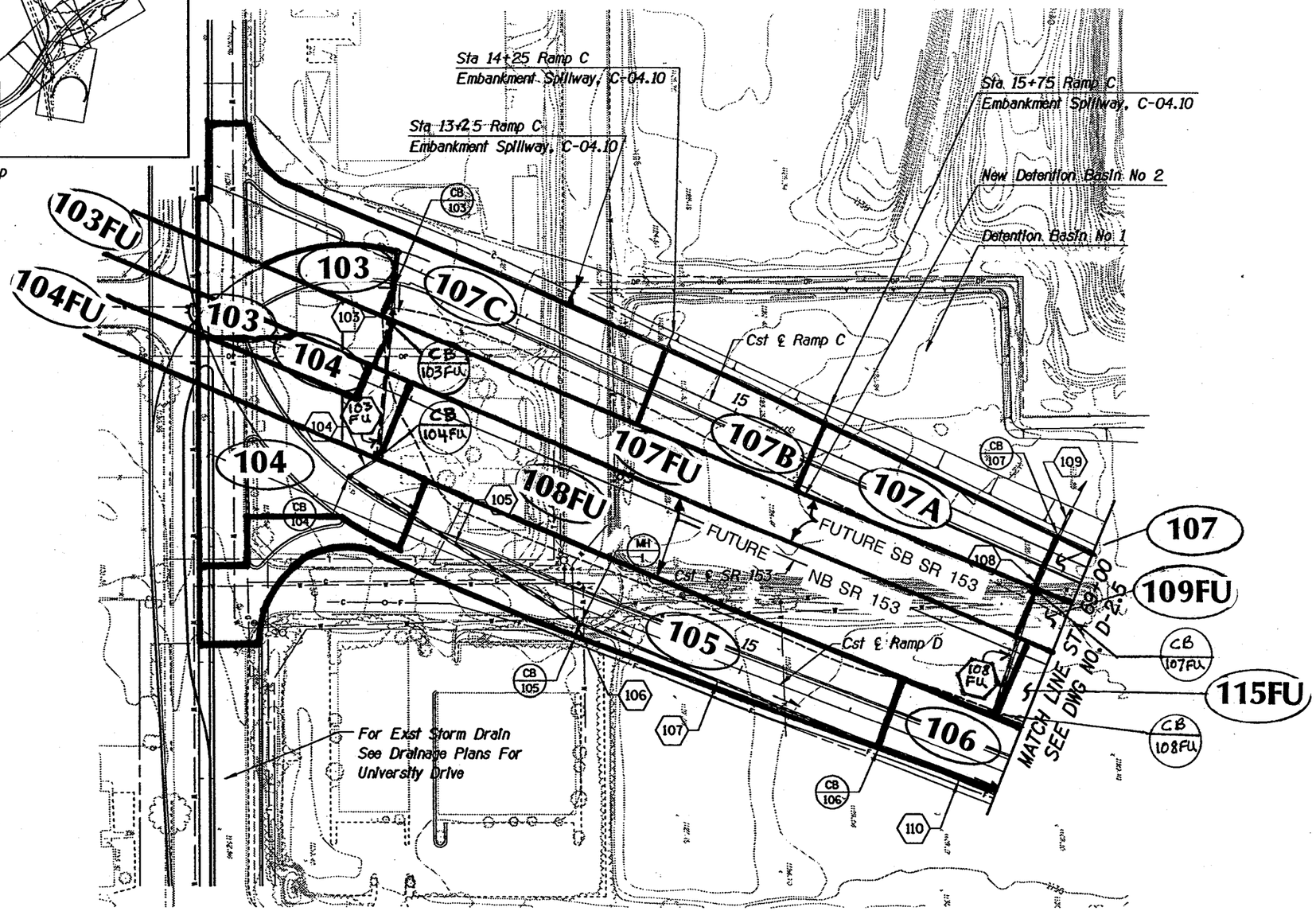

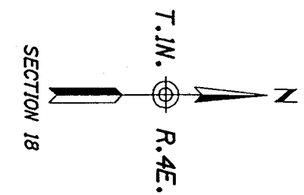

FUTURE

	NAME	DATE
DESIGN	GAG	1-94
DRAWN	DCO	1-94
CHECKED	DJS	1-94

BRW — 2700 N. Central Ave. Suite 1000 Phoenix, Arizona 85004 (602) 234-8316

ARIZONA DEPARTMENT OF TRANSPORTATION
HIGHWAYS DIVISION

SR 153
DRAINAGE PLAN
STA 61+10.69 TO STA 69+00

NOT FOR CONSTRUCTION

ROUTE	MILEPOST	LOCATION
SR 153	3	UNIVERSITY DR. TO SKY HARBOR

DWG NO. D-2.4

TRACS NO. H 3315 01C

A-6 OF

cccccc153DR01U.DGNcccccc
ccccccSYSTIMEcccccc

VIEW NAME:

F.H.W.A. REGION	STATE	PROJECT NO.	SHEET NO.	TOTAL SHEETS	AS BUILT
9	ARIZ.	HDP-920-5(001)	104	343	
153 MA 3					

Exst 3-36" CMP
Remove to New Headwall
New Detention Basin No 1
New 3-36" Headwall
STD B-11.11
CB 144
Exst 12" PVC Pipe &
Catch Basin Remove
FUTURE SB SR 153
FUTURE NB SR 153
MATCH LINE STA 69+00
SEE DWG NO. D-2.5
107
109FU
106
115FU
108
109
111
110
113
115
114
CB 109
4" PVC Remove
Cst ℄ Ramp C
Cst ℄ Ramp D
Cst ℄ SR 153
Begin Pavement
Sta 75+00.00
Exst 18" SD To Remain and Plug
@ MH & R/W C-22.30
18" SD Remove
West R/W to MH #6
Exst MH
Remove
Temporary Construction
Easement
New R/W
New Detention Basin No. 2
46th Street
Drywell Remove
24" SD Remove
CB 145
Drywell Remove
Hammond Lane
MATCH LINE STA 82+00
SEE DWG NO. D-2.6
18" SD Remove
West R/W to MH #6
Connect 18" & 12" Exst
Storm Drain to New MH#6
Q10=4.8 CFS Q100=6.5 CFS
Connect 24" Exst
Storm Drain to
New CB #112
Q10=20.2 CFS
Q100=51.2 CFS
Continue To Allow 4" SD
to Drain Into Ditch
12" SD Remove
Exst MH to MH #6
FUTURE
T.1N. R.4E.
SECTION 18

Key Map

* FROM SVERDRUP "FINAL DRAINAGE REPORT FOR SEGMENT 8C SR 153"
SEPTEMBER 1992

	NAME	DATE
DESIGN	GAG	1-94
DRAWN	DCO	1-94
CHECKED	DJS	1-94

BRW
2700 N. Central Ave.
Suite 1000
Phoenix, Arizona 85004
(602) 234-8300

ARIZONA DEPARTMENT OF TRANSPORTATION
HIGHWAYS DIVISION

SR 153
DRAINAGE PLAN
STA 69+00 TO STA 82+00

ROUTE: SR 153
MILEPOST: 3
LOCATION: UNIVERSITY DR. TO SKY HARBOR

NOT FOR CONSTRUCTION

DWG NO. D-2.5

TRACS NO. H 3315 01C

A-7 OF

SURVEY NO. | FINISHED PLANS | REVISIONS | LOCATION | DATE

ccccc153DR01.DGNccccc
cccccSYSTIMEccccc
VIEW NAME:

F.H.W.A. REGION	STATE	PROJECT NO.	SHEET NO.	TOTAL SHEETS	AS BUILT
9	ARIZ.	HDP-920-5(001)	105	343	

153 MA 3

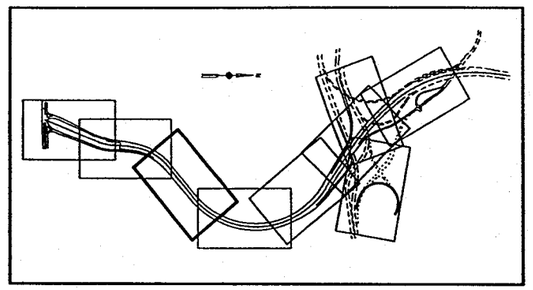

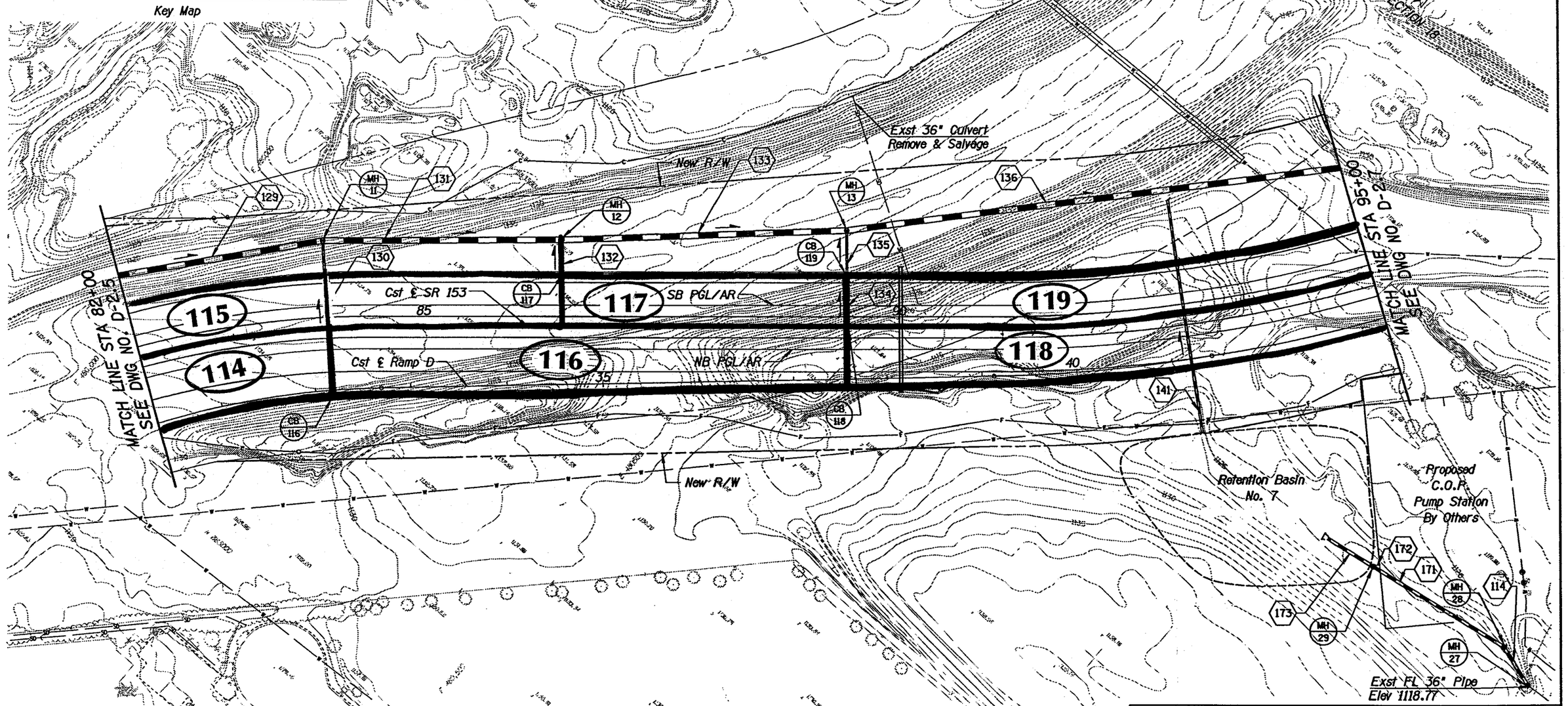

	NAME	DATE
DESIGN	GAC	1-94
DRAWN	DCO	1-94
CHECKED	DJS	1-94

BRW
2700 N. Central Ave.
Suite 1000
Phoenix, Arizona 85004
(602) 234-1555

ARIZONA DEPARTMENT OF TRANSPORTATION
HIGHWAYS DIVISION

SR 153
DRAINAGE PLAN
STA 82+00 TO STA 95+00

NOT FOR CONSTRUCTION

ROUTE	MILEPOST	LOCATION
SR 153	3	UNIVERSITY DR. TO SKY HARBOR

DWG NO. D-2.6

SURVEY NO. | FINISHED PLANS | REVISIONS | LOCATION | DATE

ccccc153DR02.DGNccccc
ccccSYSTIMEcccc

VIEW NAME:

TRACS NO. H 3315 01C

A-8 OF

F.H.W.A. REGION	STATE	PROJECT NO.	SHEET NO.	TOTAL SHEETS	AS BUILT
9	ARIZ.	HDP-920-5(001)	106	343	

153 MA 3

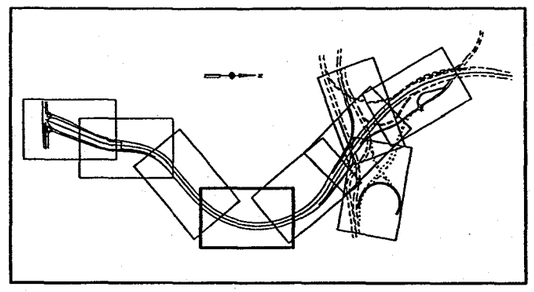

Salt River
Q 10 = 93,000 cfs
Q 100 = 215,000 cfs
Q Super Flood = 289,000 cfs
Pre-Roosevelt Dam Improvements

SECTION 18
T.1N.
R.4E.
N

MATCH LINE STA 95+00
SEE DWG NO. D-2.6

MH 14
CB 121
138
139
140
MH 15
CB 120
137
121
120

Sta 148+20± Channel=
Sta 98+96.79, 217.74 Lt.
Channel Inv Elev=1111.47
N 884417, E 480933
10 Year Salt River Flood
Elev 1120.70
100 Year Salt River Flood
Elev 1128.00

New R/W
SB PGL/AR
105
Cst ℄ SR 153
NB PGL/AR
New R/W

MATCH LINE STA. 108+00
SEE DWG NO. D-2.8

Proposed
C.O.P.
Pump Station
By Others

Begin Bridge
Sta. 100+17.30

Hohokam Expressway

	NAME	DATE
DESIGN	GAG	1-94
DRAWN	DCD	1-94
CHECKED	DJS	1-94

BRW
2700 N. Central Ave.
Suite 1000
Phoenix, Arizona 85004
(602) 234-8115

ARIZONA DEPARTMENT OF TRANSPORTATION
HIGHWAYS DIVISION

SR 153
DRAINAGE PLAN
STA 95+00 TO STA 108+00

ROUTE: SR 153
MILEPOST: 3
LOCATION: UNIVERSITY DR. TO SKY HARBOR

NOT FOR CONSTRUCTION

DWG NO. D-2.7

TRACS NO. H 3315 01C

A-9 OF

cccccc153DR03.DGNcccccc
cccccSYSTIMEcccccc

VIEW NAME:

DATE | LOCATION | REVISIONS | FINISHED PLANS | SURVEY NO.

F.H.W.A. REGION	STATE	PROJECT NO.	SHEET NO.	TOTAL SHEETS	AS BUILT
9	ARIZ.	HDP-920-5(001)	107	343	
		153 MA 3			

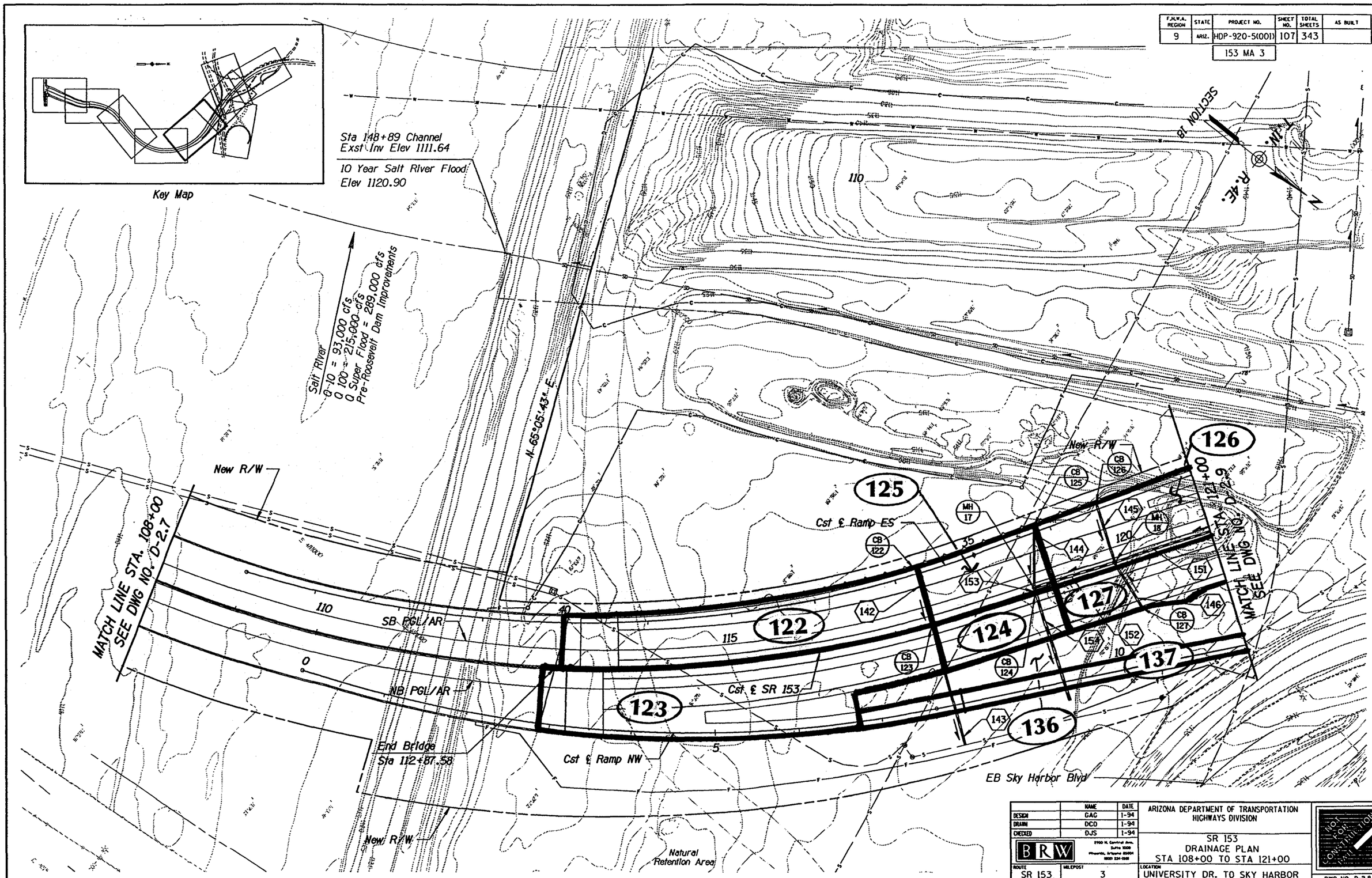

	NAME	DATE
DESIGN	GAC	1-94
DRAWN	DCD	1-94
CHECKED	DJS	1-94

BRW
2100 N. Central Ave.
Suite 1000
Phoenix, Arizona 85004
(602) 234-1555

ARIZONA DEPARTMENT OF TRANSPORTATION
HIGHWAYS DIVISION

SR 153
DRAINAGE PLAN
STA 108+00 TO STA 121+00

ROUTE: SR 153
MILEPOST: 3
LOCATION: UNIVERSITY DR. TO SKY HARBOR

NOT FOR CONSTRUCTION UNTIL

DWG NO. D-2.8

cccccc153DR04.DGNcccccc
cccccSYSTIMEcccccc
VIEW NAME:

TRACS NO. H 3315 01C

A-10 OF

DATE | LOCATION | REVISIONS | FINISHED PLANS | SURVEY NO.

F.H.W.A. REGION	STATE	PROJECT NO.	SHEET NO.	TOTAL SHEETS	AS BUILT
9	ARIZ.	HDP-920-5(001)	108	343	

153 MA 3

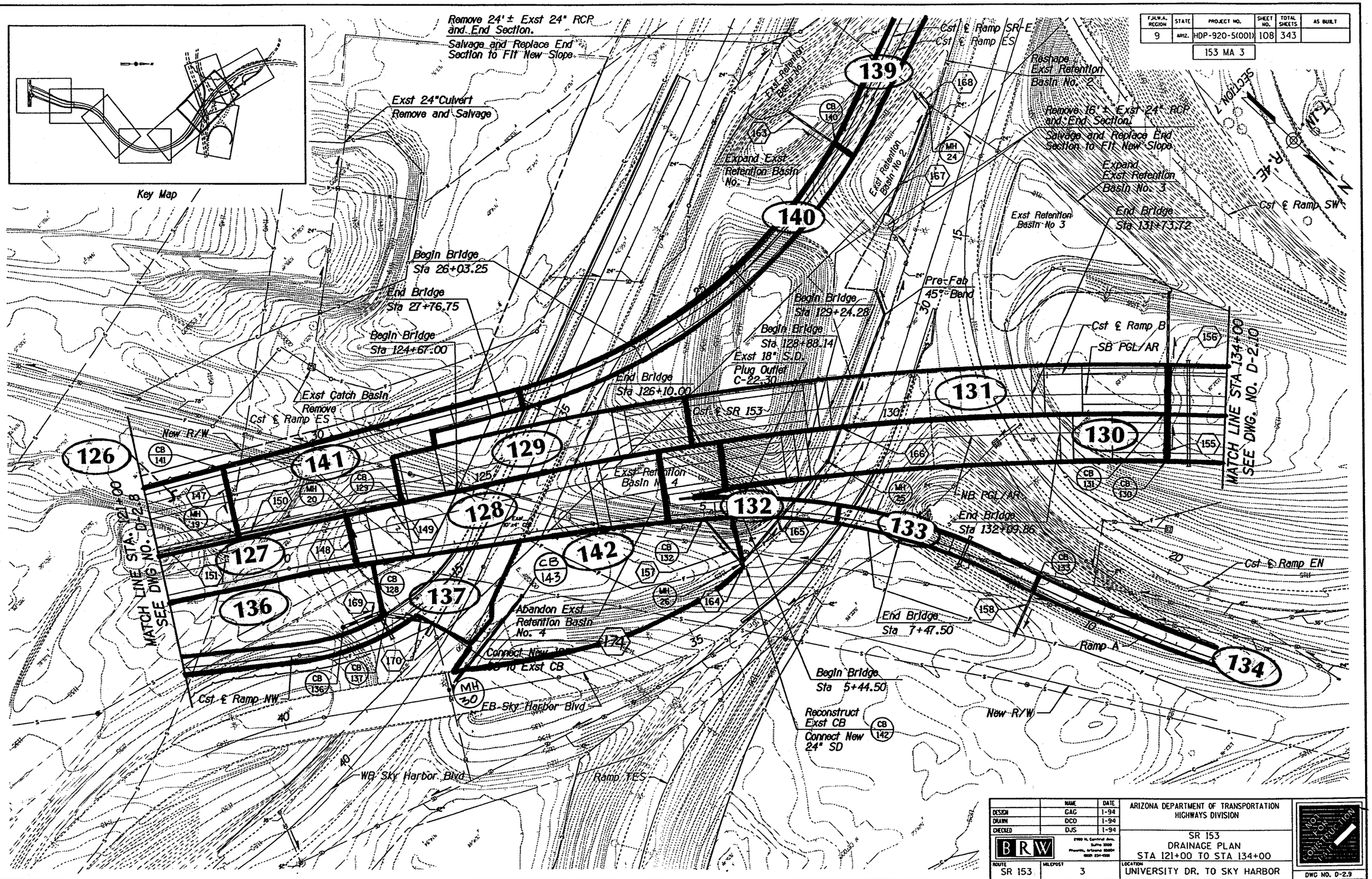

	NAME	DATE
DESIGN	GAG	1-94
DRAWN	DCO	1-94
CHECKED	DJS	1-94

BRW
2901 N. Central Ave. Suite 3000 Phoenix, Arizona 85004 (602) 234-1555

ARIZONA DEPARTMENT OF TRANSPORTATION
HIGHWAYS DIVISION

SR 153
DRAINAGE PLAN
STA 121+00 TO STA 134+00

NOT FOR CONSTRUCTION

ROUTE: SR 153 | MILEPOST: 3 | LOCATION: UNIVERSITY DR. TO SKY HARBOR

DWG NO. D-2.9

cccccc153DR05.DGNcccccc
cccccSYSTIMEcccccc
VIEW NAME:

TRACS NO. H 3315 01C

A-11 OF

SURVEY NO.
FINISHED

F.H.W.A. REGION	STATE	PROJECT NO.	SHEET NO.	TOTAL SHEETS	AS BUILT
9	ARIZ.	HDP-920-5(001)	129	411	

153 MA 3

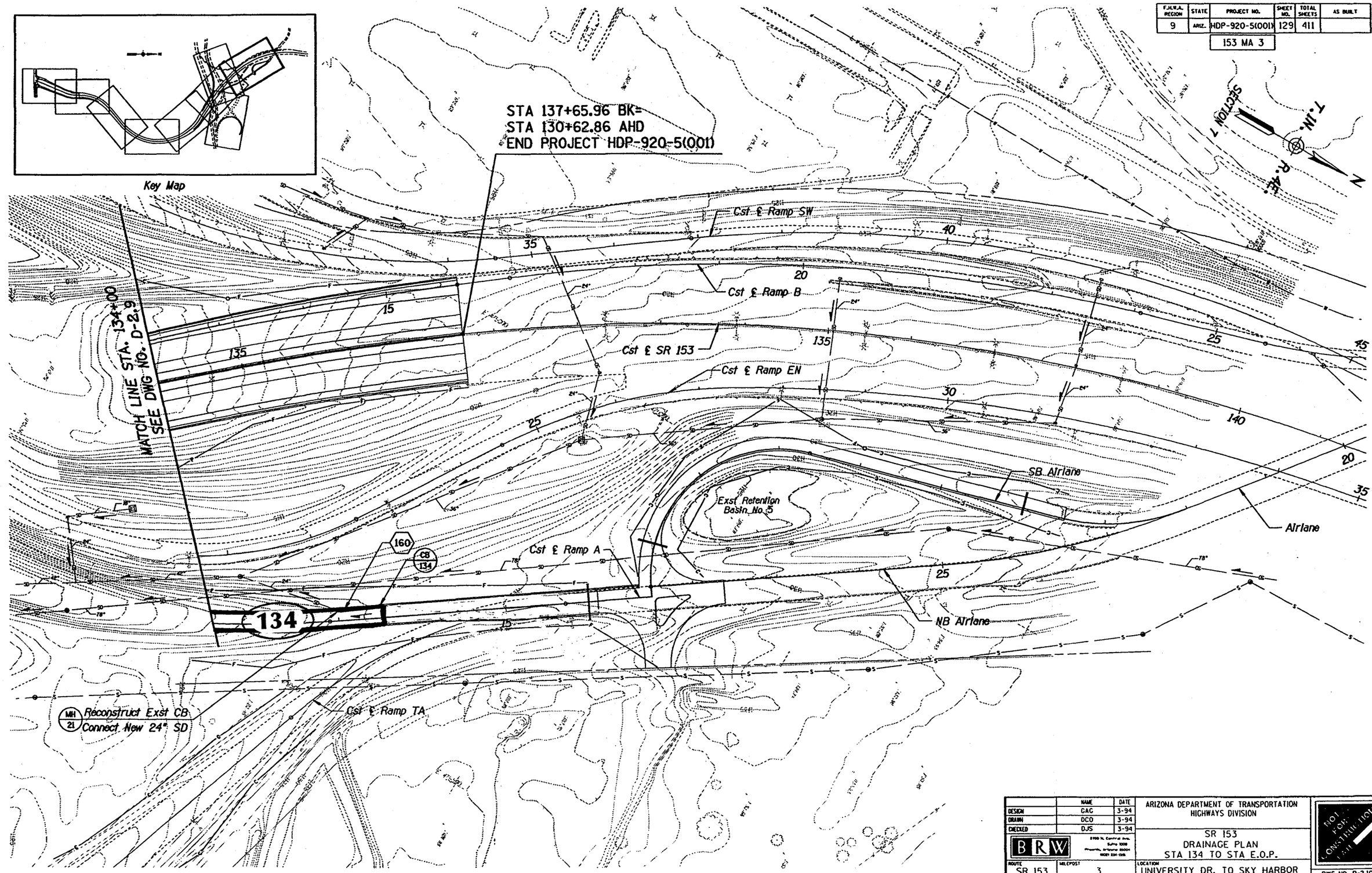

	NAME	DATE
DESIGN	GAG	3-94
DRAWN	DCO	3-94
CHECKED	DJS	3-94

BRW

ROUTE: SR 153 | MILEPOST: 3

ARIZONA DEPARTMENT OF TRANSPORTATION
HIGHWAYS DIVISION

SR 153
DRAINAGE PLAN
STA 134 TO STA E.O.P.

LOCATION: UNIVERSITY DR. TO SKY HARBOR

NOT FOR CONSTRUCTION

DWG NO. D-2.10

TRACS NO. H 3315 01C

A-12 OF

ccccc153DR06.DGNccccc
ccccc SYSTIME ccccc

VIEW NAME:

F.H.W.A. REGION	STATE	PROJECT NO.	SHEET NO.	TOTAL SHEETS	AS BUILT
9	ARIZ.	HDP-920-5(001)	110	343	

153 MA 3

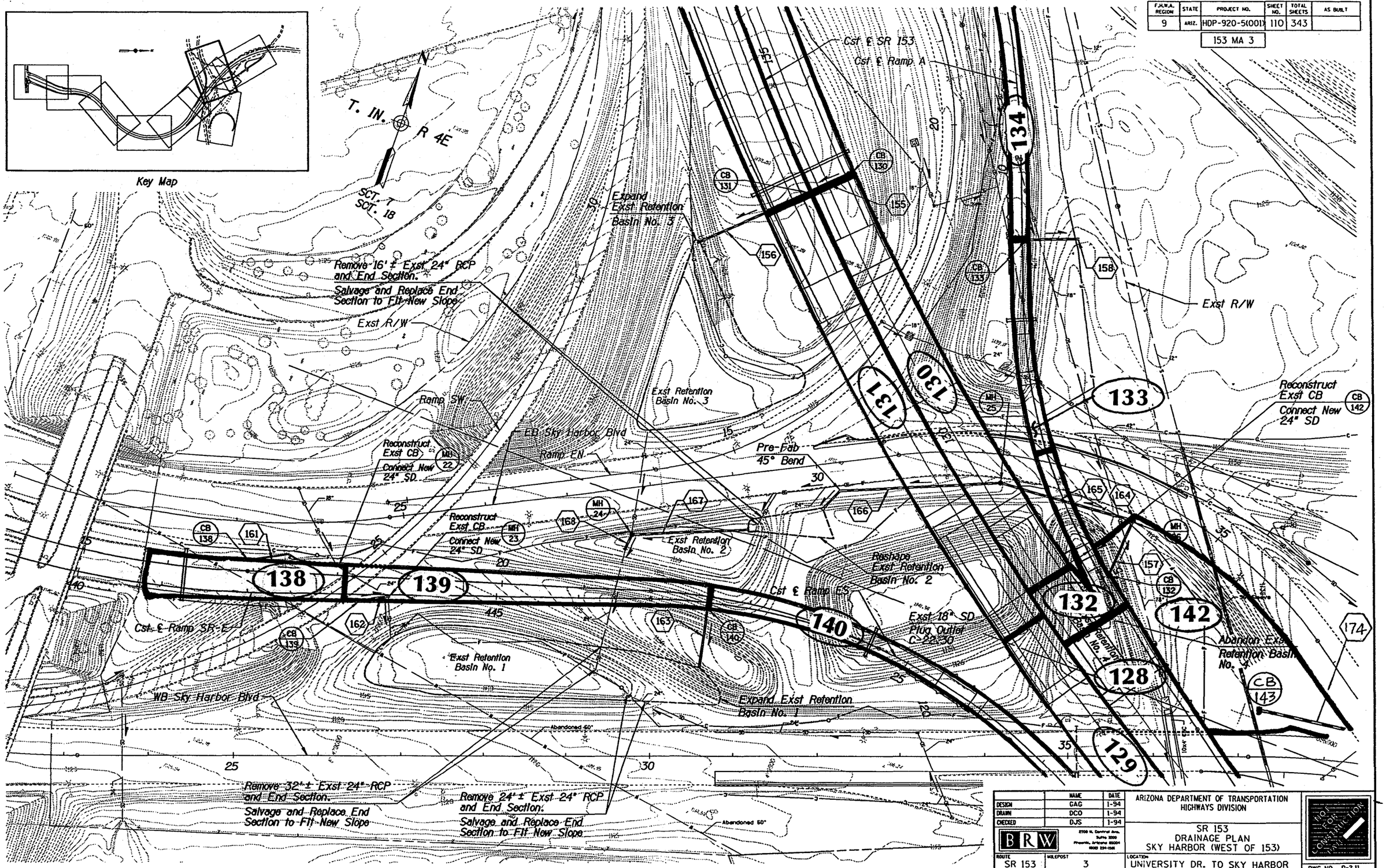

	NAME	DATE
DESIGN	GAG	1-94
DRAWN	DCO	1-94
CHECKED	DJS	1-94

BRW
2700 N. Central Ave. Suite 1000 Phoenix, Arizona 85004 (602) 234-1555

ARIZONA DEPARTMENT OF TRANSPORTATION
HIGHWAYS DIVISION

SR 153
DRAINAGE PLAN
SKY HARBOR (WEST OF 153)

NOT FOR CONSTRUCTION

ROUTE	MILEPOST	LOCATION
SR 153	3	UNIVERSITY DR. TO SKY HARBOR

DWG NO. D-2.11

TRACS NO. H 3315 01C

A-13 OF

DATE | LOCATION | REVISIONS | FINISHED PLANS | SURVEY NO.

cccccc153DR07.DGNcccccc
ccccccSYSTIMEcccccc

VIEW NAME:

F.H.W.A. REGION	STATE	PROJECT NO.	SHEET NO.	TOTAL SHEETS	AS BUILT
9	ARIZ.	HDP-920-5(001)	131	411	
		153 MA 3			

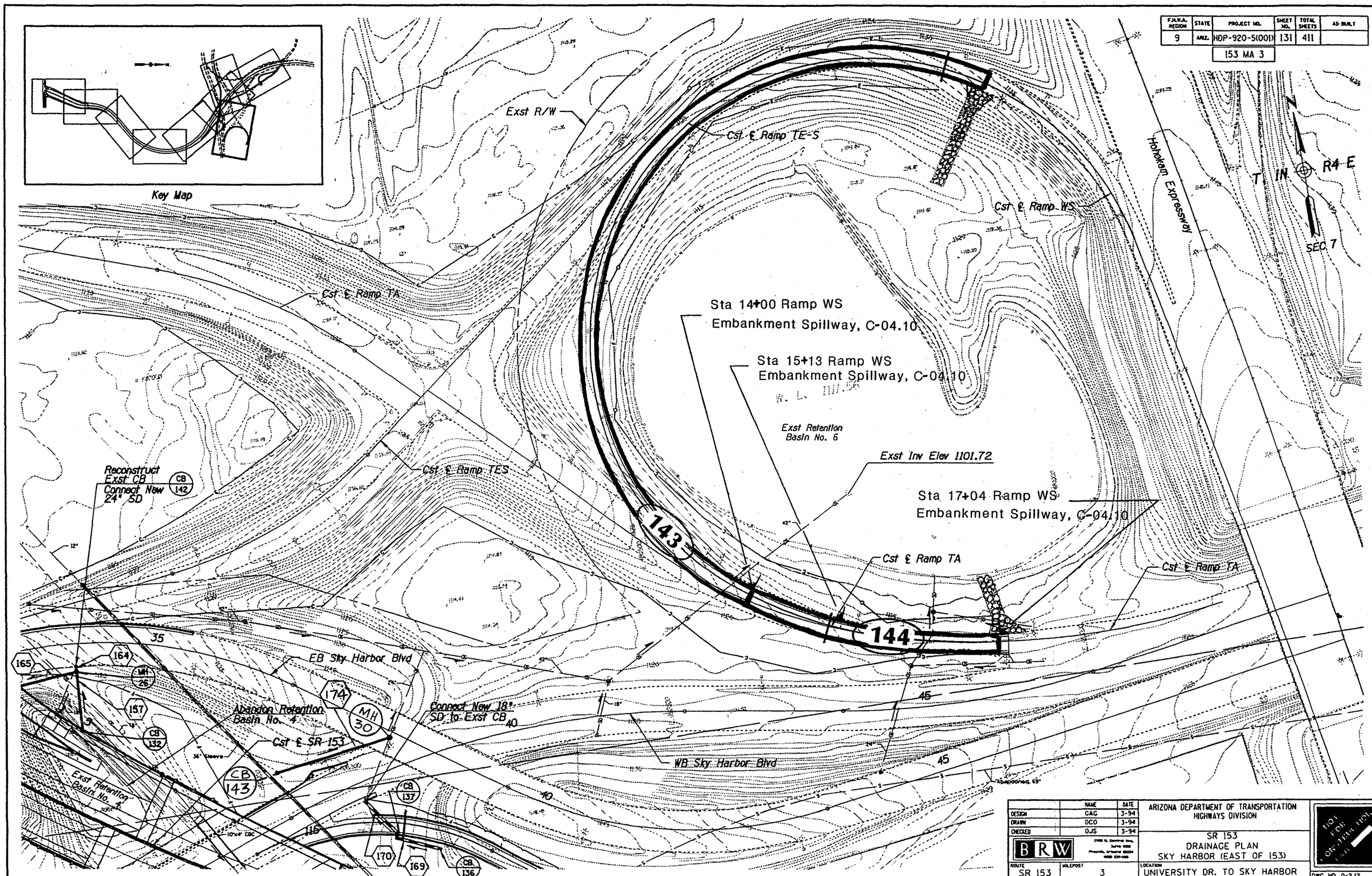

	NAME	DATE
DESIGN	GAG	3-94
DRAWN	DCO	3-94
CHECKED	DJS	3-94

BRW

ROUTE: SR 153 | MILEPOST: 3

ARIZONA DEPARTMENT OF TRANSPORTATION
HIGHWAYS DIVISION

SR 153
DRAINAGE PLAN
SKY HARBOR (EAST OF 153)

LOCATION: UNIVERSITY DR. TO SKY HARBOR

NOT FOR CONSTRUCTION

DWG NO. D-2.12

cccccl53DR08.DGNcccccc
ccccccSYSTIMEcccccc

VIEW NAME:

TRACS NO. H 3315 01C

A-14 OF

Appendix B
Roadway Typical Sections

F.H.W.A. REGION	STATE	PROJECT NO.	SHEET NO.	TOTAL SHEETS	AS BUILT
9	ARIZ.	HDP-920-5(001)	6	343	

153 MA 3

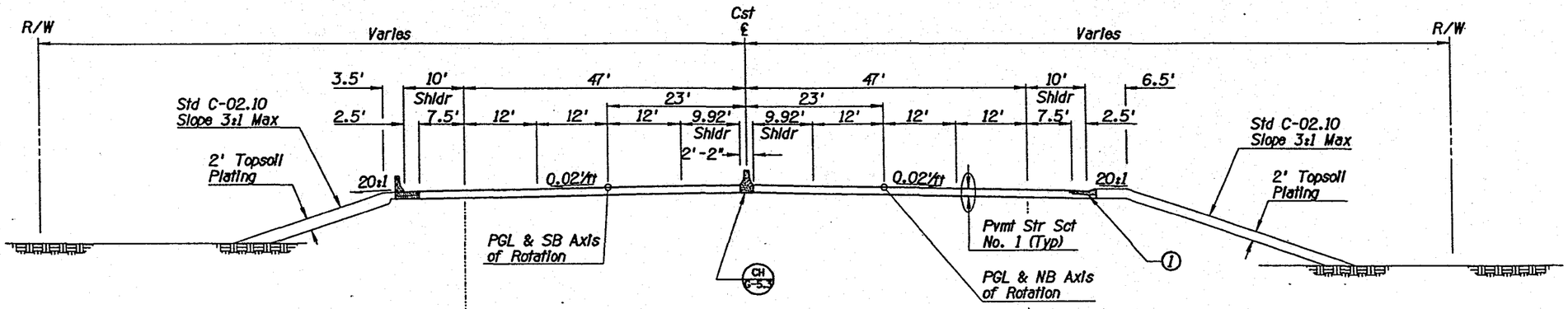

TYPICAL SECTION-SR 153

Southbound
Sta 87+15.00 to Sta 88+30.00

Northbound
Sta 119+85.00 to Sta 122+78.32

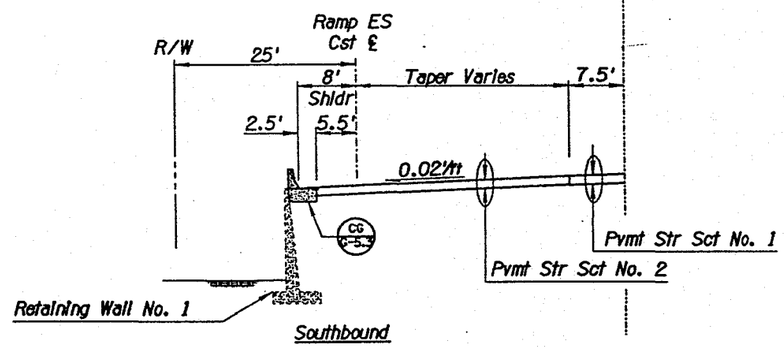

Southbound
Sta 119+85.00 to Sta 120+40.56

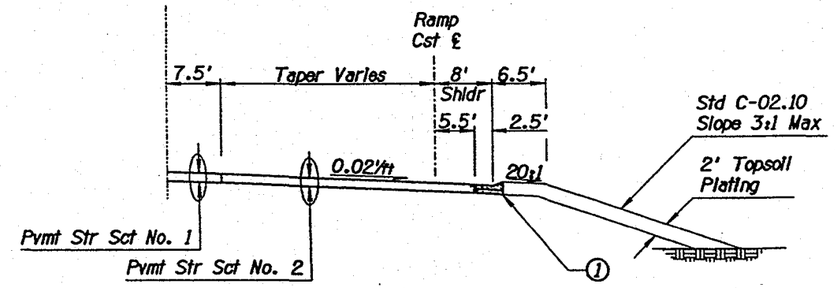

Northbound
Sta 87+15.00 to Sta 88+30.00
Sta 122+78.32 to Sta 123+00.00

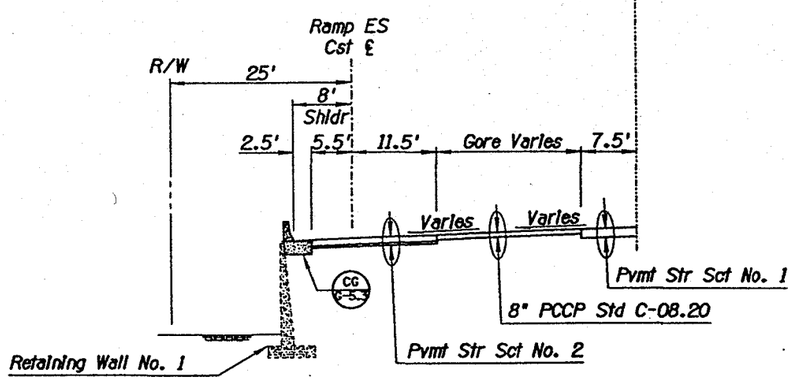

Southbound
Sta 120+40.56 to Sta 124+52.00

NOTES:

1. See Curb and Gutter Summary, Dwg No. G-4.12 or G-4.13 and Barrier Summary, Dwg No. G-4.10 or G-4.11 for type and stationing of curb and gutter or barrier.

	NAME	DATE
DESIGN	MDS	11-93
DRAWN	CLC	1-94
CHECKED		

BRW

ARIZONA DEPARTMENT OF TRANSPORTATION
HIGHWAYS DIVISION

TYPICAL SECTIONS
SR 153

NOT FOR CONSTRUCTION

ROUTE	MILEPOST	LOCATION
SR 153	3	UNIVERSITY DR. TO SKY HARBOR

DWG NO. G-3.1

TRACS NO. H 3315 01C

B-1 OF

cccccl53TY04.DGNccccc VIEW NAME:

F.H.W.A. REGION	STATE	PROJECT NO.	SHEET NO.	TOTAL SHEETS	AS BUILT
9	ARIZ.	HDP-920-5(001)	7	343	

153 MA 3

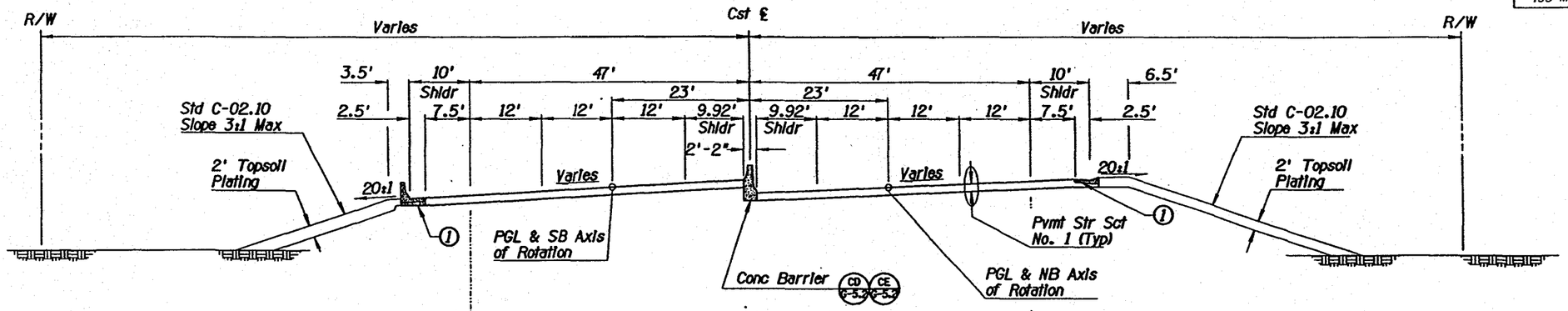

TYPICAL SECTION-SR 153 ON CURVE

Southbound

Sta 78+49.46 to Sta 87+15.00
Sta 88+30.00 to Sta 99+57.00
Sta 124+52.00 to Sta 124+62.00
Sta 126+64.00 to Sta 129+09.00

Northbound

Sta 75+00.00 to Sta 77+25.00
Sta 92+19.06 to Sta 100+02.00
Sta 116+37.00 to Sta 119+85.00
Sta 128+45.00 to Sta 128+75.00
Sta 132+22.00 to Sta 137+65.96

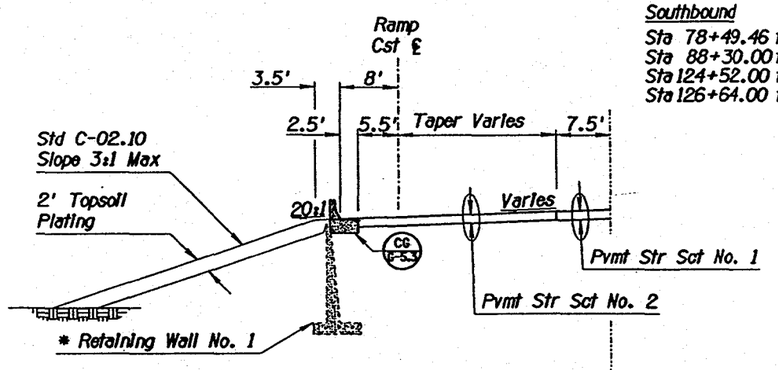

Southbound

Sta 74+14.32 to Sta 78+49.46
Sta 112+18.00 to Sta 119+85.00(*)
Sta 131+74.00 to Sta 137+65.96

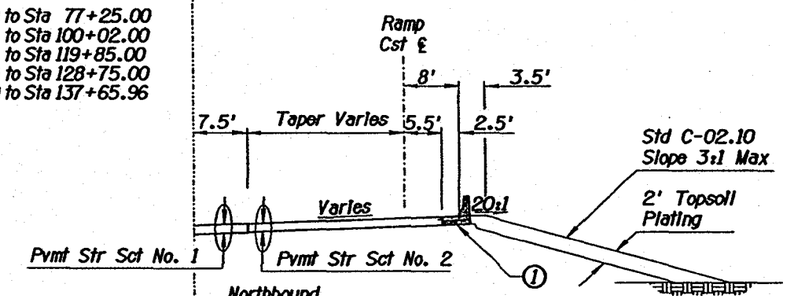

Northbound

Sta 81+28.18 to Sta 87+15.00
Sta 88+30.00 to Sta 92+19.06
Sta 113+02.58 to Sta 114+64.18
Sta 122+78.32 to Sta 124+00.00
Sta 126+22.00 to Sta 127+15.63

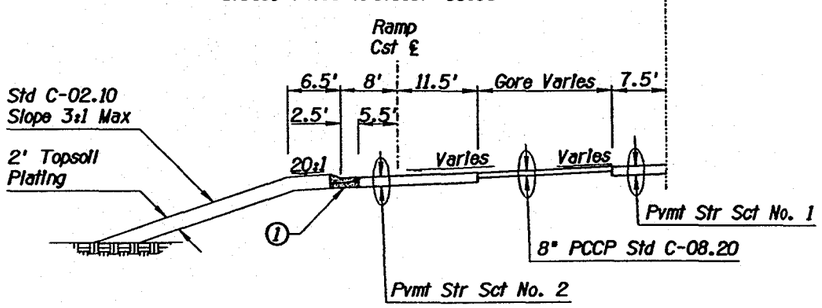

Southbound

Sta 72+50.00 to Sta 74+14.32

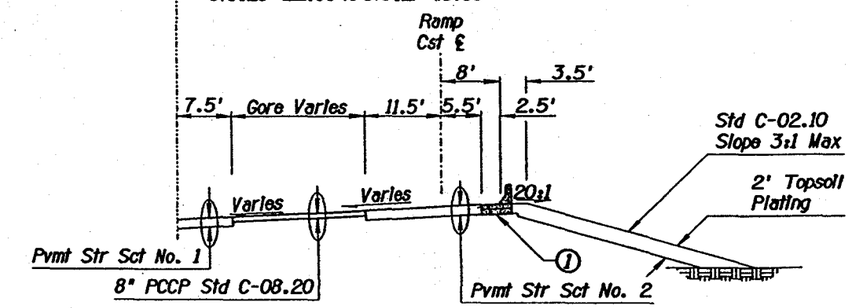

Northbound

Sta 77+25.00 to Sta 81+28.18
Sta 114+64.18 to Sta 116+37.00
Sta 127+15.63 to Sta 128+42.00

NOTES:

1. See Curb and Gutter Summary, Dwg No. G-4.12 or G-4.13 and Barrier Summary, Dwg No. G-4.10 or G-4.11 for type and stationing of curb and gutter or barrier.

	NAME	DATE
DESIGN	MDS	11-93
DRAWN	CLC	1-94
CHECKED		

BRW

ARIZONA DEPARTMENT OF TRANSPORTATION
HIGHWAYS DIVISION

TYPICAL SECTIONS
SR 153

ROUTE	MILEPOST	LOCATION
SR 153	3	UNIVERSITY DR. TO SKY HARBOR

NOT FOR CONSTRUCTION

DWG NO. G-3.2

TRACS NO. H 3315 01C

B-2 OF

SURVEY NO.	FINISH	REVISIONS	LOCATION	DATE

ccccc153TY03.DGNccccc VIEW NAME:
ccccc SYSTIME ccccc

F.H.W.A. REGION	STATE	PROJECT NO.	SHEET NO.	TOTAL SHEETS	AS BUILT
9	ARIZ.	HDP-920-5(001)	8	343	

153 MA 3

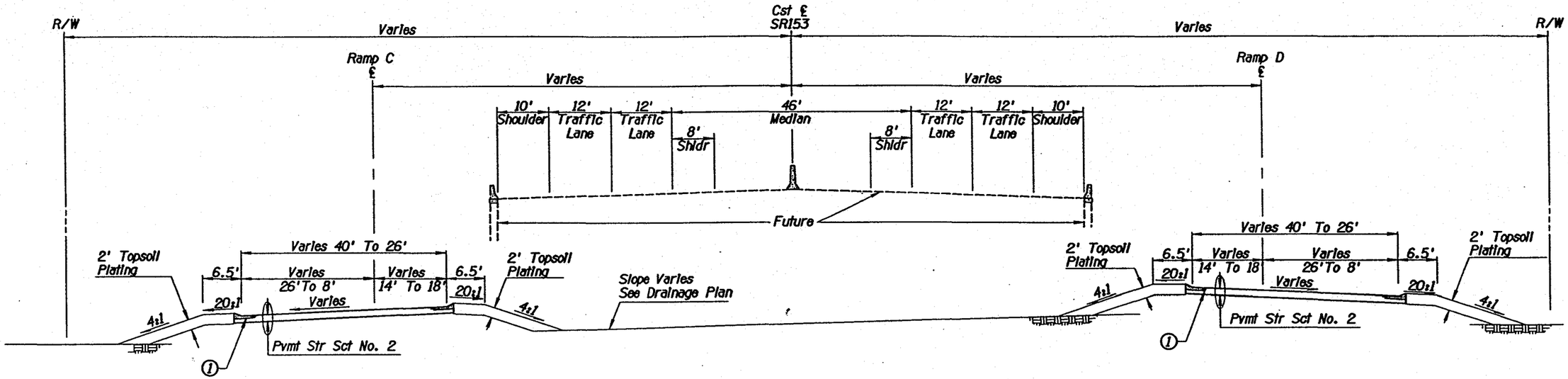

RAMP C

Sta 12+03.04 to Sta 19+90.57

TYPICAL SECTION-SR 153

Sta 61+10.69 to Sta 75+00.00

RAMP D

Sta 11+83.55 to Sta 23+53.22

NOTES:

1. See Curb and Gutter Summary, Dwg No. G-4.12 or G-4.13 and Barrier Summary, Dwg No. G-4.10 or G-4.11 for type and stationing of curb and gutter or barrier.

	NAME	DATE
DESIGN	MDS	11-93
DRAWN	CLC	1-94
CHECKED		

BRW

ARIZONA DEPARTMENT OF TRANSPORTATION
HIGHWAYS DIVISION

TYPICAL SECTIONS
SR 153, Ramps C AND D

NOT FOR CONSTRUCTION

ROUTE	MILEPOST	LOCATION
SR 153	3	UNIVERSITY DR. TO SKY HARBOR

DWG NO. G-3.3

SURVEY NO.	FINAL	REVISIONS	LOCATION	DATE

ccccc153TY05.DGNccccc
ccccc SYSTIME ccccc

VIEW NAME:

TRACS NO. H 3315 01C

F.H.W.A. REGION	STATE	PROJECT NO.	SHEET NO.	TOTAL SHEETS	AS BUILT
9	ARIZ.	HDP-920-5(001)	9	343	

153 MA 3

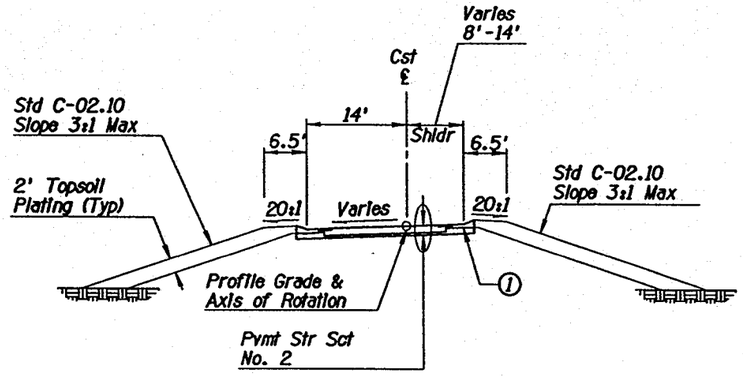

TYPICAL SECTION - RAMP A

Sta 4+62.81 to Sta 16+75.00

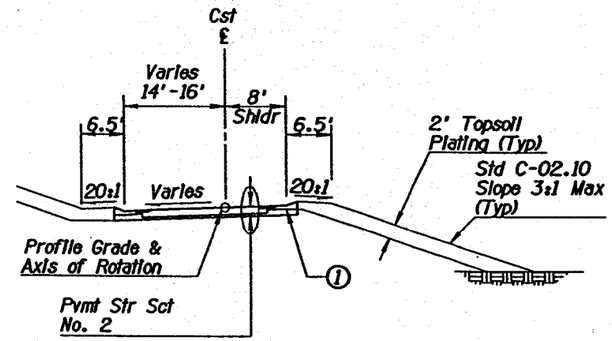

TYPICAL SECTION - RAMP NW

Sta 4+90.00 to Sta 14+83.47

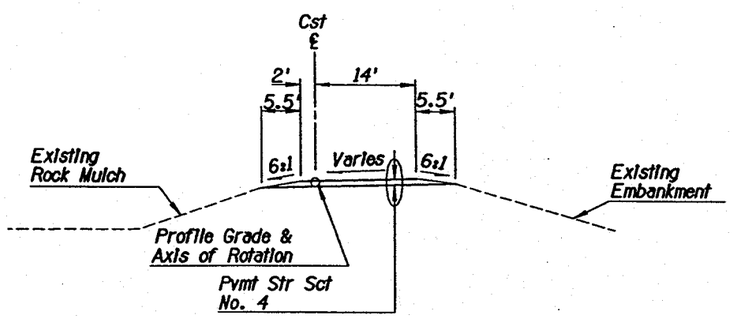

TYPICAL SECTION - SB AIRLANE

Sta 23+50.00 to Sta 29+51.92

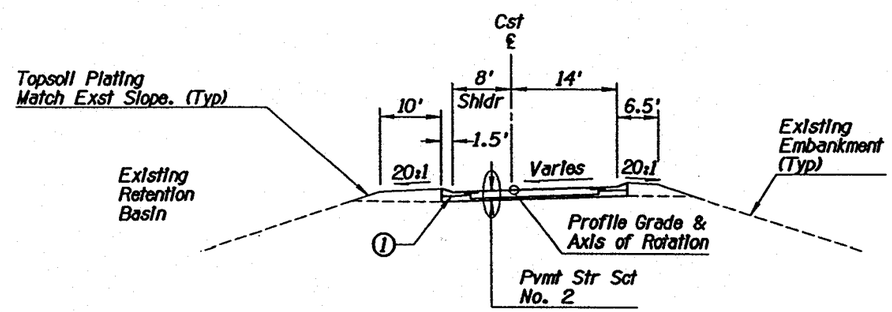

TYPICAL SECTION - RAMP WS

Sta 3+50.00 to Sta 17+15.81

NOTES:

1. See Curb and Gutter Summary, Dwg No. G-4.12 or G-4.13 and Barrier Summary, Dwg No. G-4.10 or G-4.11 for type and stationing of curb and gutter or barrier.

	NAME	DATE
DESIGN	MDS	9-93
DRAWN	CLC	1-94
CHECKED		

BRW

ARIZONA DEPARTMENT OF TRANSPORTATION
HIGHWAYS DIVISION

SR 153
TYPICAL SECTIONS
RAMPS, SB AIRLANE

ROUTE: SR 153 | MILEPOST: 3 | LOCATION: UNIVERSITY DR. TO SKY HARBOR

NOT FOR CONSTRUCTION

DWG NO. G-3.4

TRACS NO. H 3315 01C

B-4 OF

SURVEY NO.	PROJ.	REVISIONS	LOCATION	DATE

ccccc153TY01.DGNccccc

VIEW NAME:

F.H.W.A. REGION	STATE	PROJECT NO.	SHEET NO.	TOTAL SHEETS	AS BUILT
9	ARIZ.	HDP-920-5(001)	10	343	

153 MA 3

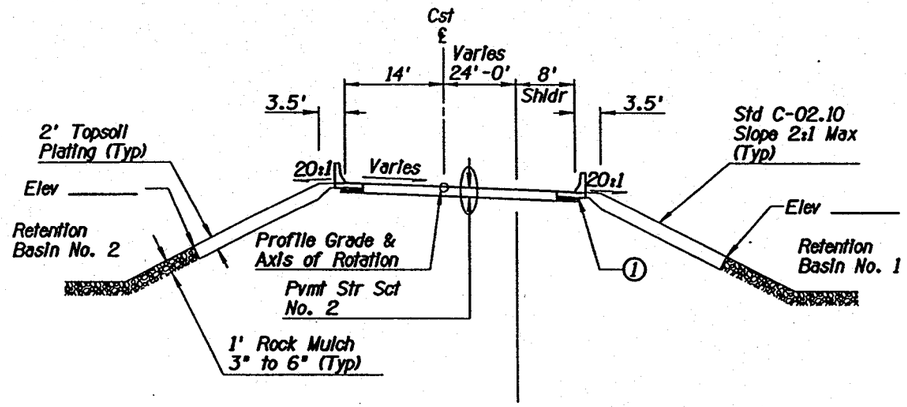

TYPICAL SECTION - RAMP ES

Sta 15+70.00 to Sta 27+87.00

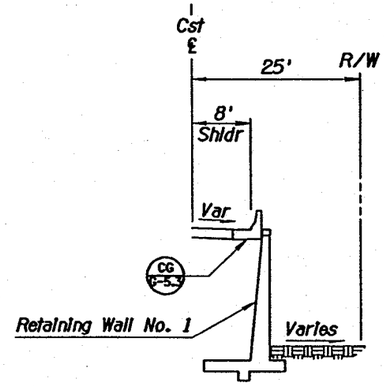

Sta 27+87 to Sta 32+78.43

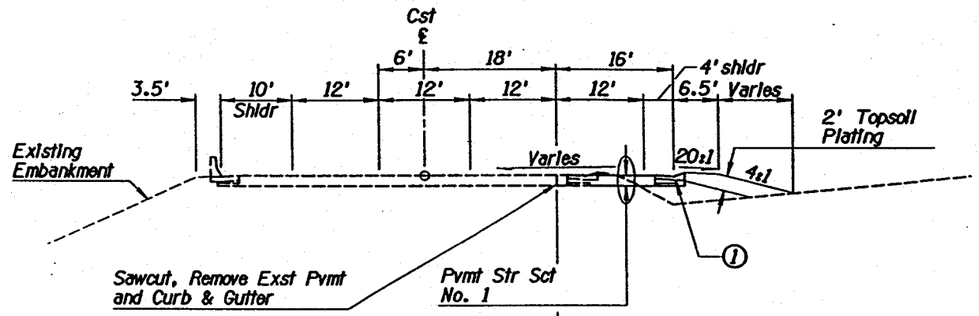

TYPICAL SECTION - WB SKY HARBOR BLVD.

Sta 30+79.00 to Sta 35+78.36

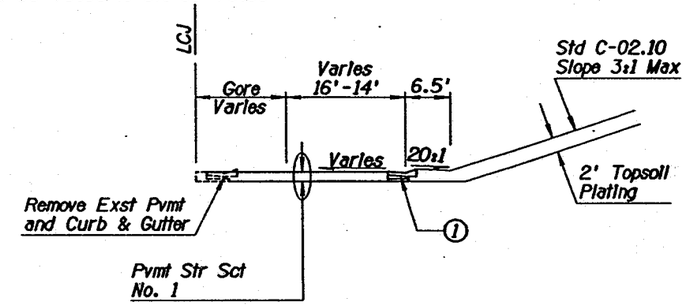

Sta 35+78.36 to Sta 36+90.86

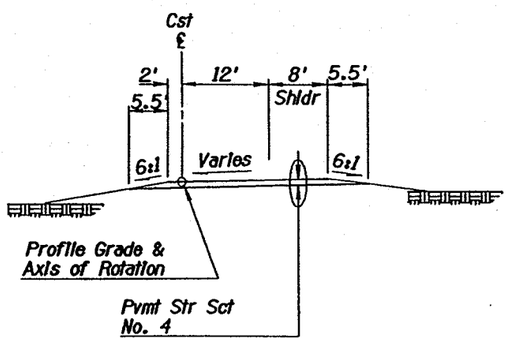

TYPICAL SECTION - RAMP TES DETOUR

Sta 1+34.50 to Sta 3+90.00

NOTES:

1. See Curb and Gutter Summary, Dwg No. G-4.12 or G-4.13 and Barrier Summary, Dwg No. G-4.10 or G-4.11 for type and stationing of curb and gutter or barrier.

	NAME	DATE
DESIGN	MDS	11-93
DRAWN	CLC	1-94
CHECKED		

BRW

ARIZONA DEPARTMENT OF TRANSPORTATION
HIGHWAYS DIVISION

TYPICAL SECTIONS
RAMP ES, WB SKY HARBOR BLVD
RAMP TES DETOUR

NOT FOR CONSTRUCTION

ROUTE: SR 153 | MILEPOST: 3 | LOCATION: UNIVERSITY DR. TO SKY HARBOR

DWG NO. G-3.5

TRACS NO. H 3315 01C

B-5 OF

SURVEY NO. | FIND | REVISIONS | LOCATION | DATE

cccccc153TY02.DGNcccccc

VIEW NAME:

F.H.W.A. REGION	STATE	PROJECT NO.	SHEET NO.	TOTAL SHEETS	AS BUILT
9	ARIZ.	HDP-920-S(001)	11	343	

153 MA 3

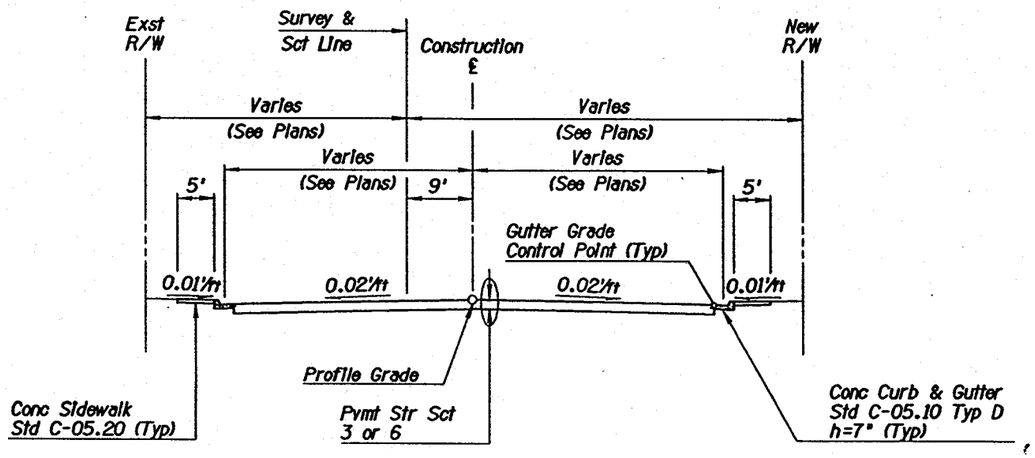

TYPICAL SECTION-UNIVERSITY DR.

Sta 14+00.00 to Sta 15+40.00 (Pvmt Str Sct No. 6)
Sta 19+03.00 to Sta 20+43.00 (Pvmt Str Sct No. 3)
Sta 25+00.00 to Sta 26+50.00 (Pvmt Str Sct No. 6)

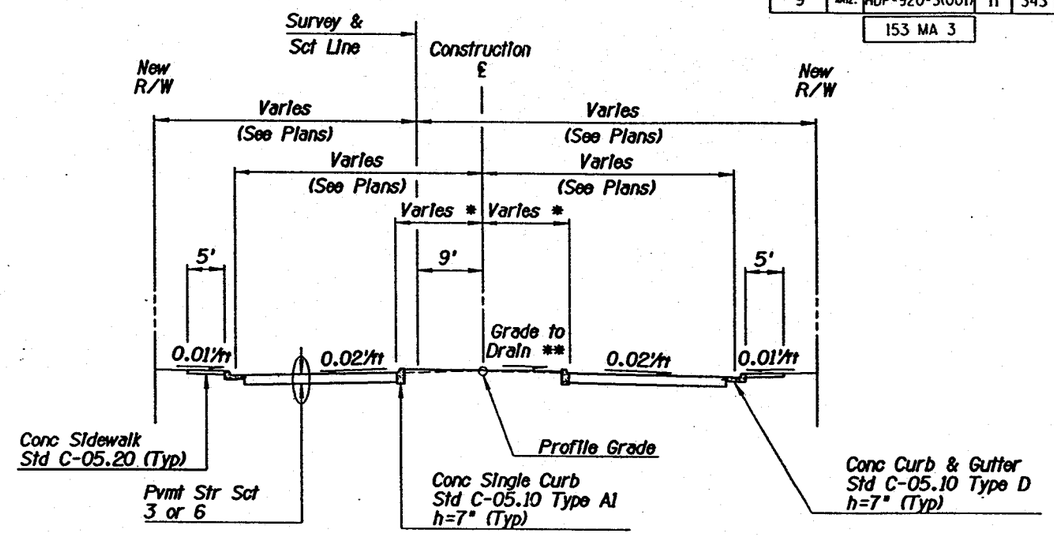

TYPICAL SECTION-UNIVERSITY DR.

Sta 20+43.00 to Sta 25+00.00 (Pvmt Str Sct No. 3 or 6)
Sta 20+43.00 to Sta 23+00.00 (Pvmt Str Sct No. 3)
Sta 23+00.00 to Sta 25+00.00 (Pvmt Str Sct No. 6)

* Pvmt Str Sct Extended, or Curb Provided for Island Development See Paving Plans.

** Median Paving or 2' Topsoil Plating (See Plans)

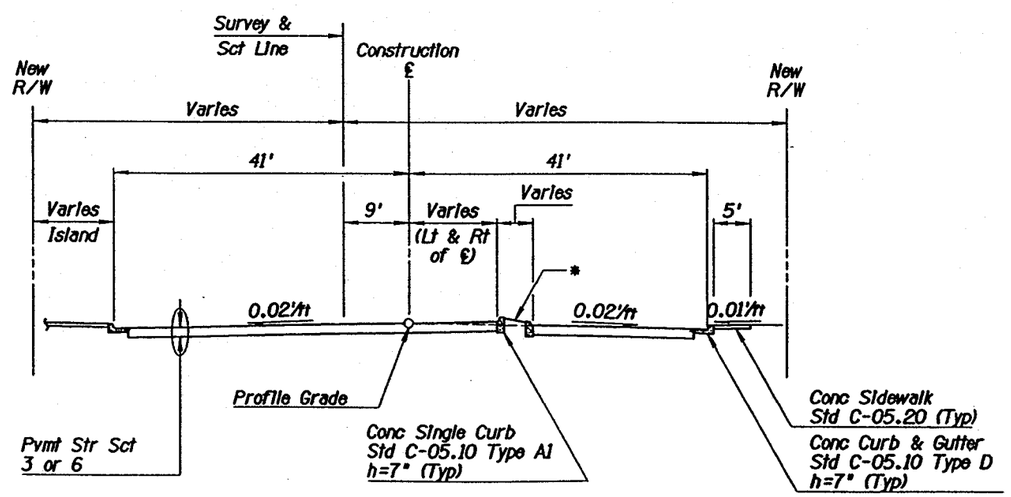

TYPICAL SECTION-UNIVERSITY DR.

Sta 15+40.00 to Sta 18+00.00 (Pvmt Str Sct No. 6)
Sta 18+00.00 to Sta 19+03.00 (Pvmt Str Sct No. 3)

* Median Paving or 2' Topsoil Plating (See Plans)

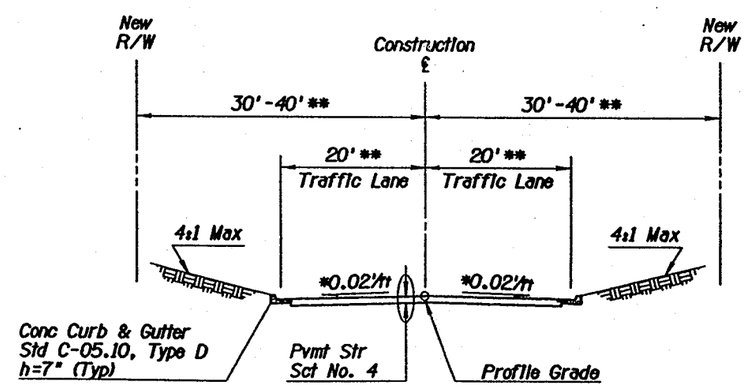

TYPICAL SECTION-LOCAL STREETS

44th Street Sta 46+50.00 to Sta 52+79.00
See Paving Plan For Winslow Avenue

* See Paving Plan For Cross Slope Transitions

** Width Varies Sta 52+79.00 To Sta 53+16.00

	NAME	DATE
DESIGN	MDS	11-93
DRAWN	CLC	1-94
CHECKED		

BRW

ARIZONA DEPARTMENT OF TRANSPORTATION
HIGHWAYS DIVISION

TYPICAL SECTIONS
UNIV. DR AND LOCAL STS

NOT FOR CONSTRUCTION

ROUTE: SR 153 | MILEPOST: 3 | LOCATION: UNIVERSITY DR. TO SKY HARBOR

DWG NO. G-3.6

TRACS NO. H 3315 01C

B-6 ___ OF ___

SURVEY NO. | FIELD BK. | PAGE | REVISIONS | LOCATION | DATE

ccccc153TY06.DGNcccccc VIEW NAME:

Appendix C
Drainage Design Criteria

DRAINAGE DESIGN CRITERIA

	SR 153	Ramps: One Lane	Ramps: Two Lane	Local Streets
BARRIERS				
Half-barrier, cast in place		C-10.09	C-10.09	
Median-barrier, cast in place				
DESIGN FREQUENCY IN YEARS				
Pavement				
Depressed Section	50-YR	50-YR	50-YR	100-YR
Non-Depressed Section	10-YR	10-YR	10-YR	10-YR
Cross Culverts	50-YR	50-YR	50-YR	50-YR
Medians	10-YR	10-YR	10-YR	10-YR
Storm Drains	10-YR	10-YR	10-YR	10-YR
Major Channels	100-YR	100-YR	100-YR	100-YR
Minor Channels	50-YR	50-YR	50-YR	50-YR
Retention Ponds	100-YR	100-YR	100-YR	100-YR
Detention Ponds	N/A	N/A	N/A	N/A
Bridge Decks	10-YR	10-YR	10-YR	10-YR

Note 14: Use Rational Method for all hydrology.

Note 15: "Design Life" - Use design roadway within right-of-way, and use existing condition outside of right-of-way.

Note 16: Use rainfall intensity from S.L.I. East Papago Freeway rainfall study.

CURB AND GUTTER TYPES PER STD. DWG. C-05.10	Type B	Type B	Type B	Type D
INLET OPTION TYPES	C-15.91 C-15.92 C-13.60	C-15.91 C-15.92 C-13.60	C-15.91 C-15.92 C-13.60	C-15.10 C-13.60

MAXIMUM VELOCITY IN EARTH CHANNELS AND AT CULVERT OUTLETS (FT/SEC)

Note 17: Evaluate per HDS 4 and soil sample gradations.

MINIMUM VELOCITY IN STORM DRAIN (FT/SEC)				
General	3 fps	3 fps	3 fps	3 fps
Absolute	2 fps	2 fps	2 fps	2 fps

Note 18: Velocity less than 3 feet per second requires MC concurrence.

Source: Sverdrup Corp., "Final Drainage Report and Calculations for Segment 8C," SR 153, Maricopa County, Project No. RAM-601-0-501, TRACS No. H 0881 01C, Contract No. 87-62, September 1992.

	SR 153	Ramps: One Lane	Ramps: Two Lane	Local Streets
MAXIMUM HEADWATER (FT BELOW SHOULDER)				
Cross Culverts	2'	2'	2'	2'
	Note 19:	Culvert headwater depth to pipe depth ratio shall be less than 1.5:1 for design storm.		
	Note 20:	Headwater for 100-year storm shall be below top of roadway, berm, or other hydraulic containment.		
Median Drainage	2'	2'	2'	2'
Storm Drains	1'	1'	1'	1'
	Note 21:	Headwater is measured to the lowest local pavement elevation.		
MAJOR CHANNELS (FT OF FREEBOARD)				
Minimum	1'	1'	1'	1'
If Froude Number is more than 0.86	Note 22:	Also use minimum freeboard equation per Design Procedure Manual.		
If channel has a bend	Note 23:	Add "superelevation freeboard" on outside bank as per Design Procedure Manual.		
If levee is required	+1'	+1'	+1'	+1'
	Note 24:	Add one foot to the normal freeboard.		
For 120% of design flow	0	0	0	0
	Note 25:	Check for overtopping with 120% of the design flow.		
MINOR CHANNELS (FT OF FREEBOARD)	0	0	0	0
	Note 26:	Check for overtopping with the design flow.		
FEMA CONSIDERATIONS BY MC	N/A	N/A	N/A	N/A
EROSION CONTROL	Note 27:	Evaluate per HDS 4 and soil sample gradations.		
ALLOWABLE PONDING OVER LANES		0.5'	0.5'	0.5'	1'
	Note 28:	Maximum ponding depth is 6 inches per Type B and 7 inches per Type D.		

	SR 153	Ramps: One Lane	Ramps: Two Lane	Local Streets
DEPRESSED AREA				
50-year storm	1'	1'	1'	1'
100-year storm	Note 29:	6 inches over center line of roadway.		
CULVERT EMBEDMENT (FT)				
Desirable	3'	3'	3'	3'
Minimum	1'	1'	1'	1'
	Note 30:	Distance listed above is from top of culvert to bottom of pavement sub-base.		
CULVERT MINIMUM SIZE	24"	24"	24"	24"
STORM DRAIN MINIMUM SIZES				
Laterals (Note 31)	18"	18"	18"	18"
Trunkline	24"	24"	24"	24"
	Note 31:	Laterals receiving inflow from only one inlet and less than 100 feet long.		
	Note 32:	University Drive will match the existing 15" storm drain laterals.		
STORM DRAIN FRICTION (n)	0.012	0.012	0.012	0.012
MEDIAN CATCH BASINS	C-15.80	C-15.80	C-15.80	C-15.80
	Note 33:	Medians include trapped areas within interchange.		
MANHOLE TYPE	C-18.40	C-18.40	C-18.40	C-18.40

Appendix D
Storm Sewer Runoff Calculations

ARIZONA DEPARTMENT OF TRANSPORTATION

STORM SEWER RUNOFF CALCULATION RECORD

LOCATION DATA

Highway SR 153

Location Phoenix, AZ

Project No.

DESIGN DATA

Frequency 10 years

P_6= 2.03 in. P_{24}= 2.43 in. P_1= 1.55 in.

RUNOFF CALCULATIONS (Future Mainline)

Drainage Area			Pav't.			Comm.			Resid.										Tc	I	Q
No.	Station-Station	Acre	C	A	CA	C	A	CA	C	A	CA	C	A	CA	C	A	CA	Σ CA	min.	in./hr.	cfs
	58+30 – 62+60 Lt	0.45	.95	.45	.428													0.428	10	4.3	1.84
	58+30 – 62+95 Rt	0.62	.95	.62	.589													0.589	10	4.3	2.53
	62+60 – 68+66 Lt	0.63	.95	.63	.598													0.598	10	4.3	2.57
	62+95 – 68+75 Rt	0.96	.95	.96	.912													0.912	10	4.3	3.92
	68+66 – 72+32 Lt	0.41	.95	.41	.389													0.389	10	4.3	1.67
	68+75 – 72+32 Rt	0.55	.95	.55	.522													0.522	10	4.3	2.25

Computed by: GAG 1/94 Checked by: D. Schaub Date: 1/94

20-0404 12/74

ARIZONA DEPARTMENT OF TRANSPORTATION

STORM SEWER RUNOFF CALCULATION RECORD

LOCATION DATA

Highway SR 153

Location Phoenix, AZ

Project No.

DESIGN DATA

Frequency 10 years

P_6= 2.03 in. P_{24}= 2.43 in. P_1= 1.55 in.

RUNOFF CALCULATIONS (Mainline)

Drainage Area			Pav't.			Comm.			Resid.											Tc	I	Q
No.	Station-Station	Acre	C	A	CA	C	A	CA	C	A	CA	C	A	CA	C	A	CA	ΣCA	min.	in./hr.	cfs
111	72+32 - 75+09 Rt	0.39	.95	.39	.371													0.371	10	4.3	1.59
113	75+09 - 77+05 Rt	0.26	↑	.26	.247													0.247	↑	↑	1.06
115	75+29 - 86+45 Lt	1.57		1.57	1.492													1.492			6.41
116	84+00 - 89+45 Rt	0.87		.87	.826													0.826			3.55
117	86+45 - 89+45 Lt	0.40		.40	.380													0.380			1.63
118	89+45 - 95+00 Rt	0.77		.77	.732													0.732			3.15
119	89+45 - 95+00 Lt	0.75		.75	.713													0.713			3.06
120	95+00 - 100+35 Rt	0.72		.72	.684													0.684			2.94 + 0.33
121	95+00 - 100+00 Lt	0.67		.67	.636													0.636			2.74 + 0.33
122	112+90 - 117+45 Lt	0.72		.72	.684													0.684			2.94 + 0.27
123	112+62 - 117+45 Rt	0.90		.90	.855													0.855			4.25 + 0.27
124	117+45 - 119+00 Rt	0.21		.21	.200													0.200			0.86
125	117+45 - 119+00 Lt	0.27		.27	.256													0.256			1.10
126	119+00 - 121+98 Lt	0.58		.58	.551													0.551			2.37
127	119+00 - 123+30 Rt	0.58	↓	.58	.551													0.551	↓	↓	2.37
128	123+30 - 127+10 Rt	0.66	.95	.66	.627													0.627	10	4.3	2.70

Computed by: GAG 1/94 Checked by: D Schook Date: 1/94

† ● 20-0404 12/74

D-2

ARIZONA DEPARTMENT OF TRANSPORTATION

STORM SEWER RUNOFF CALCULATION RECORD

LOCATION DATA

Highway SR 153

Location Phoenix, AZ

Project No.

DESIGN DATA

Frequency 10 years

P_6= 2.03 in. P_{24}= 2.43 in. P_1= 1.55 in.

RUNOFF CALCULATIONS (Mainline)

Drainage Area			Pav't.			Comm.			Resid.										Tc	I	Q
No.	Station-Station	Acre	C	A	CA	C	A	CA	C	A	CA	C	A	CA	C	A	CA	Σ CA	min.	in./hr.	cfs
129	123+98 - 127+51 Lt	0.47	.95	.47	.446													0.446	10	4.3	1.92
130	127+83 - 133+30 Rt	0.74	.95	.74	.703													0.703	10	4.3	3.02
131	127+51 - 133+30 Lt	0.78	.95	.78	.741													0.741	10	4.3	3.19

Computed by: GAG 1/94 Checked by: D. Schaub Date: 1/94

D-3

20-0404 12/74

ARIZONA DEPARTMENT OF TRANSPORTATION

STORM SEWER RUNOFF CALCULATION RECORD

LOCATION DATA

Highway SR 153

Location Phoenix, AZ

Project No.

DESIGN DATA

Frequency 10 years

P_6= 2.03 in. P_{24}= 2.43 in. P_1= 1.55 in.

RUNOFF CALCULATIONS Ramp A

Drainage Area			Pav't.			Comm.			Resid.										Tc	I	Q
No.	Station-Station	Acre	C	A	CA	C	A	CA	C	A	CA	C	A	CA	C	A	CA	Σ CA	min.	in./hr.	cfs
132	4+58 to 6+66	0.23	.95	.23	.218													0.218	10	4.3	0.94
133	6+66 to 9+20	0.15	.95	.15	.143													0.143	10	4.3	0.61
134	9+20 to 13+50	0.25	.95	.25	.238													0.238	10	4.3	1.02
135	13+50 to 25+50 NB Airlane	0.42	.95	.42	.399													0.399	10	4.3	1.72

Computed by: GAG 1/94 Checked by: D. Schaub Date: 1/94

20-0404 12/74

D-4

ARIZONA DEPARTMENT OF TRANSPORTATION

STORM SEWER RUNOFF CALCULATION RECORD

LOCATION DATA

Highway SR 153

Location Phoenix, AZ

Project No.

DESIGN DATA

Frequency 10 years

P_6= 2.03 in. P_{24}= 2.43 in. P_1= 1.55 in.

RUNOFF CALCULATIONS (Ramps C, C-1)

Drainage Area			Pav't.			Comm.			Resid.			Landscaped							Tc	I	Q
No.	Station-Station	Acre	C	A	CA	C	A	CA	C	A	CA	C	A	CA	C	A	CA	Σ CA	min.	in./hr.	cfs
107	18+00 to 21+15	0.32	.95	.21	.200							.60	.11	.066				0.266	10	4.3	1.14
109	21+15 to 24+35	0.63	.95	.63	.599													0.599	10	4.3	2.57
	Ramp C-1																				
103	10+25 to 12+22	0.19	.95	.19	.181													0.181	10	4.3	0.78

Computed by: GAG 1/94 Checked by: D. Schaub Date: 1/94

† 20-0404 12/74

D-5

ARIZONA DEPARTMENT OF TRANSPORTATION

STORM SEWER RUNOFF CALCULATION RECORD

LOCATION DATA

Highway SR 153

Location Phoenix, AZ

Project No.

DESIGN DATA

Frequency 10 years

P_6= 2.03 in. P_{24}= 2.43 in. P_1= 1.55 in.

RUNOFF CALCULATIONS (Ramps D, D-1)

Drainage Area			Pav't.			Comm.			Resid.			Landscaped							Tc	I	Q
No.	Station-Station	Acre	C	A	CA	C	A	CA	C	A	CA	C	A	CA	C	A	CA	Σ CA	min.	in./hr.	cfs
105	10+00 to 16+35	0.97	.95	.63	.599							.60	.34	.204				0.803	10	4.3	3.45
106	16+35 to 18+75	0.33	.95	.19	.181							.60	.14	.084				0.265	10	4.3	1.14
108	18+75 to 20+58	0.22	.95	.13	.124							.60	.09	.054				0.178	10	4.3	0.76
110	20+58 to 23+25	0.29	.95	.18	.171							.60	.11	.066				0.237	10	4.3	1.02
114	23+25 to 32+16	1.65	.95	1.56	1.482							.60	.09	.054				1.536	10	4.3	6.60
	Ramp D-1																				
104	11+50 to 14+21	0.43	.95	.43	.409													0.409	10	4.3	1.76

Computed by: GAG 1/94 Checked by: D. Schaub Date: 1/94

20-0404 12/74

D-9

ARIZONA DEPARTMENT OF TRANSPORTATION

STORM SEWER RUNOFF CALCULATION RECORD

LOCATION DATA

Highway SR 153

Location Phoenix, AZ

Project No.

DESIGN DATA

Frequency 10 years

P_6= 2.03 in. P_{24}= 2.43 in. P_1= 1.55 in.

RUNOFF CALCULATIONS (Ramp ES)

Drainage Area			Pav't.			Comm.			Resid.			Landscaped							Tc	I	Q
No.	Station-Station	Acre	C	A	CA	C	A	CA	C	A	CA	C	A	CA	C	A	CA	Σ CA	min.	in./hr.	cfs
138	From Sverdrup	0.30	.95	.23	.218							.7	.07	.049				0.267	10	4.28	1.14
139	18+05 to 22+50	0.40	.95	.40	.380													0.380	10	4.3	1.63
140	22+50 to 27+55	0.31	.95	.31	.295													0.295	10	4.3	1.27
141	27+55 to 31+20	0.55	.95	.55	.523													0.523	10	4.3	2.25

Computed by: GAG 1/94 Checked by: D. Schaub Date: 1/94

† 20-0404 12/74

D-7

ARIZONA DEPARTMENT OF TRANSPORTATION

STORM SEWER RUNOFF CALCULATION RECORD

LOCATION DATA

Highway SR 153

Location Phoenix, AZ

Project No.

DESIGN DATA

Frequency 10 years

P_6= 2.03 in. P_{24}= 2.43 in. P_1= 1.55 in.

RUNOFF CALCULATIONS (Ramp NW)

Drainage Area			Pav't.			Comm.			Resid.			Landscaped							Tc	I	Q
No.	Station-Station	Acre	C	A	CA	C	A	CA	C	A	CA	C	A	CA	C	A	CA	ΣCA	min.	in./hr.	cfs
136	6+72 to 14+08	0.85										.60	.85	.51				0.51	10	4.3	2.19
137	6+42 to 15+70	0.72	.95	.72	.684													0.684	10	4.3	2.94

Computed by: GAG 1/94 Checked by: D. Schaub Date: 1/94

t 20-0404 12/74

D-8

S.D. Line	Lateral	Structure No.	Q_{in} (cfs.)	Sub-Total Q_{10}	Total Q_{10}
		CB 103	0.78		
103					0.78
		62+60 Lt	1.84		
Future Line					2.62
		62+95 Rt	2.53		
104					5.15
		CB 104	1.76		
105					6.91
		CB 105	3.45		
107					10.36
		CB 106	1.14		
110					11.50
		CB 108	0.76		
112					12.26
		CB 109	2.57		
	113			2.57	
		72+32 Lt	1.67		
	Future Line			4.24	
		72+32 Rt	2.25		
	115			6.49	
116					18.75
		CB 110	1.02		
118					19.77
		CB 111	1.59		
120					21.36
		CB 113	1.06		
	122			1.06	
		M.H. 6	4.8 (1)		
	123			5.86	
					27.22
		Pipe 121	20.2 (1)		
124					47.42
125					47.42
		CB 114	6.60		
	126			6.60	
		CB 115	6.41		
	127			13.01	
128					60.43

BRW

JOB SR 153 SHEET NO.

MADE BY gag DATE 1/16/94 JOB NO.

CHECKED BY DJS DATE 1/17/94 SEC. SHT. NO. 1/2

CALCULATIONS FOR Q_{10} - Trunk Line South of River D-9

S.D. Line	Lateral	Structure No.	Q in (cfs)	Sub-total Q_{10}	Total Q_{10}
128					60.43
129					60.43
		CB 116	3.55		
131					63.98
		CB 117	1.63		
133					65.61
		CB 118	3.15		
	134			3.15	
		CB 119	3.06		
	135			6.21	
136					71.82
		CB 120	3.27		
	137			3.27	
		CB 121	3.07		
	138			6.34	
139					78.16
140					78.16

① SOURCE: "Final Drainage Report for Segment 8C SR153", Sverdrup, September 1992.

BRW

JOB SR 153 SHEET NO.

MADE BY gac DATE 1/16/94 JOB NO.

CHECKED BY DJS DATE 1/19/94 SEC. SHT. NO. 2/2

CALCULATIONS FOR Q10-Trunk Line South of River D-10

S.D. Line	Lateral	Structure No.	Q in (cfs)	Sub-Total Q_{100}	Total Q_{100}
		CB 103	1.27		
103					1.27
		62+60 Lt	3.00		
Future Line					4.27
		62+95 Rt	4.12		
104					8.39
		CB 104	2.87		
105					11.26
		CB 105	5.62		
107					16.88
		CB 106	1.86		
110					18.74
		CB 108	1.24		
112					19.98
		CB 109	4.18		
	113			4.18	
		72+32 Lt	2.72		
	Future Line			6.90	
		72+32 Rt	3.66		
	115			10.56	
116					30.54
		CB 110	1.66		
118					32.20
		CB 111	2.59		
120					34.79
		CB 113	1.73		
	122			1.73	
		M.H. 6	6.5 ①		
	123			8.23	
					43.02
		Pipe 121	51.2 ①		
124					94.22
125					94.22
		CB 114	10.74		
	126			10.74	
		CB 115	10.43		
	127			21.17	
128					115.39

BRW

JOB SR 153 SHEET NO.

MADE BY gag DATE 1/16/94 JOB NO.

CHECKED BY DJS DATE 1/17/94 SEC. SHT. NO. 1/2

CALCULATIONS FOR Q_{100} - Trunk Line South of Salt River

S.D. Line	Lateral	Structure No.	Q in (cfs)	Sub-Total Q_{100}	Total Q_{100}
128					115.39
129					115.39
		CB 116	5.78		
131					121.17
		CB 117	2.65		
133					123.82
		CB 118	5.13		
	134			5.13	
		CB 119	4.98		
	135			10.11	
136					133.93
		CB 120	5.32		
	137			5.32	
		CB 121	5.00		
	138			10.32	
139					144.25
140					144.25

① SOURCE: "Final Drainage Report for Segment 8C SR153", Sverdrup, September 1992.

NOTE: These discharges were obtained from the Q10 discharges with the following formula:

$$Q100 = Q10\left(\frac{i_{100}}{i_{10}}\right) = Q10\left(\frac{7.0}{4.3}\right) = 1.628\,Q10$$

BRW

JOB SR 153 SHEET NO.

MADE BY gag DATE 1/16/94 JOB NO.

CHECKED BY DJS DATE 1/17/94 SEC. SHT. NO. 2/2

CALCULATIONS FOR Q100 - Trunk Line South of Salt River

ARIZONA DEPARTMENT OF TRANSPORTATION
HYDROLOGIC DESIGN DATA

Project No. _____ TRACS No. _____
Project Name _____ Date _____
Location/Station _____
Designer _____ Checker G. Goetz 4/14/94

RAINFALL DEPTH-DURATION-FREQUENCY (D-D-F) WORKSHEET

PART A

Determine rainfall depths from the isopluvial maps **(Appendix B)**:

2-year, 6-hour		$P_{2,6'}$	= 1.1"	1.16
2-year, 24-hour		$P_{2,24'}$	= 1.35"	1.44
100-year, 6-hour		$P_{100,6'}$	= 3.1"	3.25
100-year, 24-hour		$P_{100,24'}$	= 3.8"	4.04

PART B

Compute the following:

2-year, 1-hour	$-0.011 + \frac{.942\,(P_{2,6'})^2}{(P_{2,24'})} = -0.011 + \frac{.942\,(1.1")^2}{(1.35")}$	$P_{2,1'}$	= 0.833"
100-year, 1-hour	$.494 + \frac{.755\,(P_{100,6'})^2}{(P_{100,24'})} = .494 + \frac{.755\,(3.1")^2}{(3.8")}$	$P_{100,1'}$	= 2.403"
2-year, 2-hour	$.341(P_{2,6'}) + .659(P_{2,1'}) = .341(1.1") + .659(.833")$	$P_{2,2'}$	= 0.924"
2-year, 3-hour	$.569(P_{2,6'}) + .431(P_{2,1'}) = .569(1.1") + .431(.833")$	$P_{2,3'}$	= 0.985"
2-year, 12-hour	$.500(P_{2,6'}) + .500(P_{2,24'}) = .500(1.1") + .500(1.35")$	$P_{2,12'}$	= 1.225"
100-year, 2-hour	$.341(P_{100,6'}) + .659(P_{100,1'}) = .341(3.1") + .659(2.403")$	$P_{100,2'}$	= 2.641"
100-year, 3-hour	$.569(P_{100,6'}) + .431(P_{100,1'}) = .569(3.1") + .431(2.403")$	$P_{100,3'}$	= 2.800"
100-year, 12-hour	$.500(P_{100,6'}) + .500(P_{100,24'}) = .500(3.1") + .500(3.8")$	$P_{100,12'}$	= 3.450

Note: 5" denotes 5 minutes, etc.; 1' denotes 1 hour, etc.

FIGURE 1-2
RAINFALL DEPTH-DURATION-FREQUENCY (D-D-F) WORKSHEET
(Continued)

PART D

For any flood frequency (T-yr) other than 2-year or 100-year, calculate the rainfall depth for each rainfall duration (t) by the following equation:

$$P_{T,t} = (X)(P_{2,t}) + (Y)(P_{100,t})$$

where X and Y for a selected frequency (T-yr) are:

Frequency (T-yr)	X	Y
5-year	.674	.278
10-year	.496	.449
25-year	.293	.669
50-year	.146	.835
500-year	-.337	1.381

Selected frequency (T-yr) = 5-YR X = .674 Y = .278

5-min	$(X)(P_{2,5"}) + (Y)(P_{100,5"})$ = (.674)(.283) + (.278)(.721)	$P_{5,5"}$	= 0.391
10-min	$(X)(P_{2,10"}) + (Y)(P_{100,10"})$ = (")(.425) + (")(1.105)	$P_{5,10"}$	= 0.594
15-min	$(X)(P_{2,15"}) + (Y)(P_{100,15"})$ = (")(.516) + (")(1.418)	$P_{5,15"}$	= 0.742
30-min	$(X)(P_{2,30"}) + (Y)(P_{100,30"})$ = (")(.683) + (")(1.922)	$P_{5,30"}$	= 0.995
1-hour	$(X)(P_{2,1'}) + (Y)(P_{100,1'})$ = (")(.833) + (")(2.403)	$P_{5,1'}$	= 1.229
2-hour	$(X)(P_{2,2'}) + (Y)(P_{100,2'})$ = (")(.924) + (")(2.691)	$P_{5,2'}$	= 1.357
3-hour	$(X)(P_{2,3'}) + (Y)(P_{100,3'})$ = (")(.985) + (")(2.800)	$P_{5,3'}$	= 1.442
6-hour	$(X)(P_{2,6'}) + (Y)(P_{100,6'})$ = (")(1.1) + (")(3.1)	$P_{5,6'}$	= 1.603
12-hour	$(X)(P_{2,12'}) + (Y)(P_{100,12'})$ = (")(1.225) + (")(3.450)	$P_{5,12'}$	= 1.785
24-hour	$(X)(P_{2,24'}) + (Y)(P_{100,24'})$ = (")(1.35) + (")(3.80)	$P_{5,24'}$	= 1.966

Note: 5" denotes 5 minutes, etc.; 1' denotes 1 hour, etc.

RAINFALL DEPTH-DURATION-FREQUENCY (D-D-F) WORKSHEET
(Continued)

PART D

For any flood frequency (T-yr) other than 2-year or 100-year, calculate the rainfall depth for each rainfall duration (*t*) by the following equation:

$$P_{T,t} = (X)(P_{2,t}) + (Y)(P_{100,t})$$

where X and Y for a selected frequency (T-yr) are:

Frequency (T-yr)	X	Y
5-year	.674	.278
10-year	.496	.449
25-year	.293	.669
50-year	.146	.835
500-year	-.337	1.381

Selected frequency (T-yr) = 25 X = .293 Y = .669

5-min	$(X)(P_{2,5"}) + (Y)(P_{100,5"})$ = (.293)(.283) + (.669)(.721)	$P_{25,5"}$ = 0.565
10-min	$(X)(P_{2,10"}) + (Y)(P_{100,10"})$ = (")(.425) + (")(1.105)	$P_{25,10"}$ = 0.864
15-min	$(X)(P_{2,15"}) + (Y)(P_{100,15"})$ = (")(.516) + (")(1.418)	$P_{25,15"}$ = 1.100
30-min	$(X)(P_{2,30"}) + (Y)(P_{100,30"})$ = (")(.683) + (")(1.922)	$P_{25,30"}$ = 1.486
1-hour	$(X)(P_{2,1'}) + (Y)(P_{100,1'})$ = (")(.833) + (")(2.403)	$P_{25,1'}$ = 1.852
2-hour	$(X)(P_{2,2'}) + (Y)(P_{100,2'})$ = (")(.924) + (")(2.641)	$P_{25,2'}$ = 2.038
3-hour	$(X)(P_{2,3'}) + (Y)(P_{100,3'})$ = (")(.985) + (")(2.800)	$P_{25,3'}$ = 2.162
6-hour	$(X)(P_{2,6'}) + (Y)(P_{100,6'})$ = (")(1.1) + (")(3.1)	$P_{25,6'}$ = 2.396
12-hour	$(X)(P_{2,12'}) + (Y)(P_{100,12'})$ = (")(1.225) + (")(3.450)	$P_{25,12'}$ = 2.667
24-hour	$(X)(P_{2,24'}) + (Y)(P_{100,24'})$ = (")(1.35) + (")(3.80)	$P_{25,24'}$ = 2.938

Note: 5" denotes 5 minutes, etc.; 1' denotes 1 hour, etc.

FIGURE 1-2
RAINFALL DEPTH-DURATION-FREQUENCY (D-D-F) WORKSHEET
(Continued)

PART D

For any flood frequency (T-yr) other than 2-year or 100-year, calculate the rainfall depth for each rainfall duration (*t*) by the following equation:

$$P_{T,t} = (X)(P_{2,t}) + (Y)(P_{100,t})$$

where X and Y for a selected frequency (T-yr) are:

Frequency (T-yr)	X	Y
5-year	.674	.278
10-year	.496	.449
25-year	.293	.669
50-year	.146	.835
500-year	-.337	1.381

Selected frequency (T-yr) = 50-YR X = .146 Y = .835

5-min	$(X)(P_{2,5'}) + (Y)(P_{100,5'})$	= (.146)(.293) + (.835)(.721)	$P_{50,5'}$ = 0.643
10-min	$(X)(P_{2,10'}) + (Y)(P_{100,10'})$	= (.146)(.425) + (.835)(1.105)	$P_{50,10'}$ = 0.985
15-min	$(X)(P_{2,15'}) + (Y)(P_{100,15'})$	= (.146)(.516) + (.835)(1.418)	$P_{50,15'}$ = 1.259
30-min	$(X)(P_{2,30'}) + (Y)(P_{100,30'})$	= (.146)(.683) + (.835)(1.922)	$P_{50,30'}$ = 1.705
1-hour	$(X)(P_{2,1'}) + (Y)(P_{100,1'})$	= (.146)(.833) + (.835)(2.403)	$P_{50,1'}$ = 2.128
2-hour	$(X)(P_{2,2'}) + (Y)(P_{100,2'})$	= (.146)(.924) + (.835)(2.641)	$P_{50,2'}$ = 2.340
3-hour	$(X)(P_{2,3'}) + (Y)(P_{100,3'})$	= (.146)(0.985) + (.835)(2.800)	$P_{50,3'}$ = 2.482
6-hour	$(X)(P_{2,6'}) + (Y)(P_{100,6'})$	= (.146)(1.1) + (.835)(3.1)	$P_{50,6'}$ = 2.749
12-hour	$(X)(P_{2,12'}) + (Y)(P_{100,12'})$	= (.146)(1.225) + (.835)(3.45)	$P_{50,12'}$ = 3.050
24-hour	$(X)(P_{2,24'}) + (Y)(P_{100,24'})$	= (.146)(1.35) + (.835)(3.8)	$P_{50,24'}$ = 3.370

Note: 5" denotes 5 minutes, etc.; 1' denotes 1 hour, etc.

RAINFALL DEPTH-DURATION-FREQUENCY (D-D-F) WORKSHEET
(Continued)

PART E

Tabulate the rainfall Depth-Duration-Frequency statistics below:

Duration	Rainfall Depth, In Inches — Frequency, In Years						
	2	5	10	25	50	100	500
5-min.	0.283	0.391	0.464	.565	0.643	0.721	
10-min.*	0.425	0.594	0.707	.864	0.985	1.105	
15-min.	0.516	0.742	0.893	1.100	1.259	1.418	
30-min.*	0.683	0.995	1.202	1.486	1.705	1.922	
1-hour	.833	1.229	1.492	1.852	2.128	2.403	
2-hour	0.924	1.357	1.644	2.038	2.340	2.641	
3-hour	0.985	1.442	1.746	2.162	2.482	2.800	
6-hour	1.1	1.603	1.938	2.396	2.749	3.100	
12-hour	1.225	1.785	2.157	2.667	3.060	3.450	
24-hour	1.35	1.966	2.376	2.938	3.370	3.800	

* - Note: 10-min. and 30-min. values are not coded into the PH record.
5" denotes 5 minutes, etc.; 1' denotes 1 hour, etc.

Appendix E
Storm Sewer Hydraulic Calculations

LIST OF STORM SEWER DESIGN RUNS

STORM SEWER LOCATION	FILE NAME	DESIGN EVENT
Catch Basin 103 TO THE Salt River (SR153, Sta 61+00 TO 98+097)	D1E10T10.STM (for RCP)	10 YR
" " " " "	D1E100 10.STM (for RCP)	100 YR
" " " " "	C1E10T10.STM (for CIPCP)	10 YR
" " " " "	C1E100 10.STM (for CIPCP	100 YR
Catch Basin 122 TO PIPE 143 Discharge (SR153, Sta 77+05)	D2E10.STM	10 YR
Catch Basin 129 TO PIPE 154 Discharge (SR 153, Sta 118+78 TO 123+98)	D3E10.STM	10 YR
" " " " " "	D3E50.STM	50 YR
Catch Basin 132 TO RET. BASIN 2 (WB Sky Harbor Blvd, Sta 30+00 TO 34+00)	D4E10.STM	10 YR
CATCH BASIN 130 TO RET. BASIN 3 (SR153, STA 133+30)	D5E10.STM	10 YR
CATCH BASIN 136 TO PIPE 170 DISCHARGE (RAMPNW, STA 13+50) to STA 14+08)	D6E10.STM	10 YR

BRW

JOB SR 153 SHEET NO.

MADE BY D. Schaub DATE 1/19/94 JOB NO.

CHECKED BY G. Goetz DATE 1/19/94 SEC. SHT. NO. 1/2

CALCULATIONS FOR SUMMARY SS Design Runs

LIST OF STORM SEWER DESIGN RUNS

STORM SEWER LOCATION	FILE NAME	DESIGN EVENT
CATCH BASIN 133 TO PIPE 158 DISCHARGE (RAMPA, STA 9+20)	D7E10.STM	10-YR
CATCH BASIN 135 TO PIPE 160 DISCHARGE (RAMPA, STA 13+50 TO 15+38)	D8E10.STM	10-YR
CATCH BASINS 138 & 139 TO EXST CATCH BASIN (RAMPES, STA 16+95 TO 18+63)	D9E10.STM	10-YR
CATCH BASIN 140 TO RET. BASIN 1, (RAMPES, STA 22+50)	D10E10.STM	10-YR
RETENTION BASIN 2 TO PIPE 168 DISCHARGE (EB SKY Harbor Blvd, STA 27+60 TO 29+10)	D11E10.STM	10-YR

BRW

JOB SR 153 SHEET NO.

MADE BY D. Schaub DATE 1/19/94 JOB NO.

CHECKED BY G. Goetz DATE 1/19/94 SEC. SHT. NO. 2/2

CALCULATIONS FOR Summary, SS Design Runs

• Determine location of storm drain outfall to Salt River along south bank and elevations for the discharge, 10-year Tailwater and 100-year Tailwater.

- Location

outfall on Pre-100% 80 Plans, Sky Harbor Access Road (SR153), RAM-601-0-501, 153 MA 003, is as follows:

STA 143+50 Channel
Channel Inv. Elev. 1110.32
N 884,211
E 480,512

New Location from 100' Contour map

Channel sta = 143+50 + 490 = STA. 148+40

map measured coordinates are:

N 884425, E 480952

Location referenced to SR 153 median ℄ will be determined by CADD.

- Invert Elevation of Salt River Channel

Salt River Channel profile is shown on Plans for Hohokam Expressway (SR 143), RAM-600-3-511, 143 MA 1, as follows:

See Attached Plan Sheet { NEW CHANNEL BTM ELEV. = 1110.20, STA 143+00
Channel slope = 0.2358 %

Invert Elev. at River STA. 148+40

Flow line Elev. = 1110.20 + 0.002358 (14840 - 14300)

= 1111.47

NOTE: 1/17/94 - DISCHARGE POINT HAS BEEN MOVED 20' DOWNSTREAM TO STA 148+20. USE PREVIOUS OUTFLOW ELEVATION OF 1111.47.

BRW

JOB SR 153 - SKY HARBOR EXPRESSWAY SHEET NO.
MADE BY D. Schaub DATE 8/28/93 JOB NO. 1956K13
CHECKED BY G. Goetz DATE 1/18/94 SEC. SHT. NO. 1/4
CALCULATIONS FOR SALT R. OUTFALL, STA 98±97, 218'± LT.

- 10- and 100-Year Salt River Flood Elevation

River Station = 148+20

10-Year W.S. Elev.

River Station	W.S. Elevation	
147+85	1120.65 ①	
148+20	1120.72 ②	Say 1120.7
150+00	1121.03 ①	

100-Year W.S. Elev.

River Station	W.S. Elevation	
147+85	1127.97 ①	
148+20	1128.04 ②	Say 1128.0
150+00	1128.37 ①	

① SOURCE: Simons, Li & Associates Inc., "BRIDGE HYDRAULICS REPORT, STATE ROUTE 153, CROSSING OF THE SALT RIVER," HEC-2, JANUARY 1994.

② CALCULATED BY PRORATING UPSTREAM AND DOWNSTREAM W.S. ELEVATIONS FROM HEC-2 RUNS.

BRW

JOB SR153-Skyharbor Expressway SHEET NO.
MADE BY D. Schaub DATE 1/3/94 JOB NO.
CHECKED BY G. Goetz DATE 1/18/94 SEC. SHT. NO. 2/4
CALCULATIONS FOR Salt River Outfall, Sta 98+97 218±67

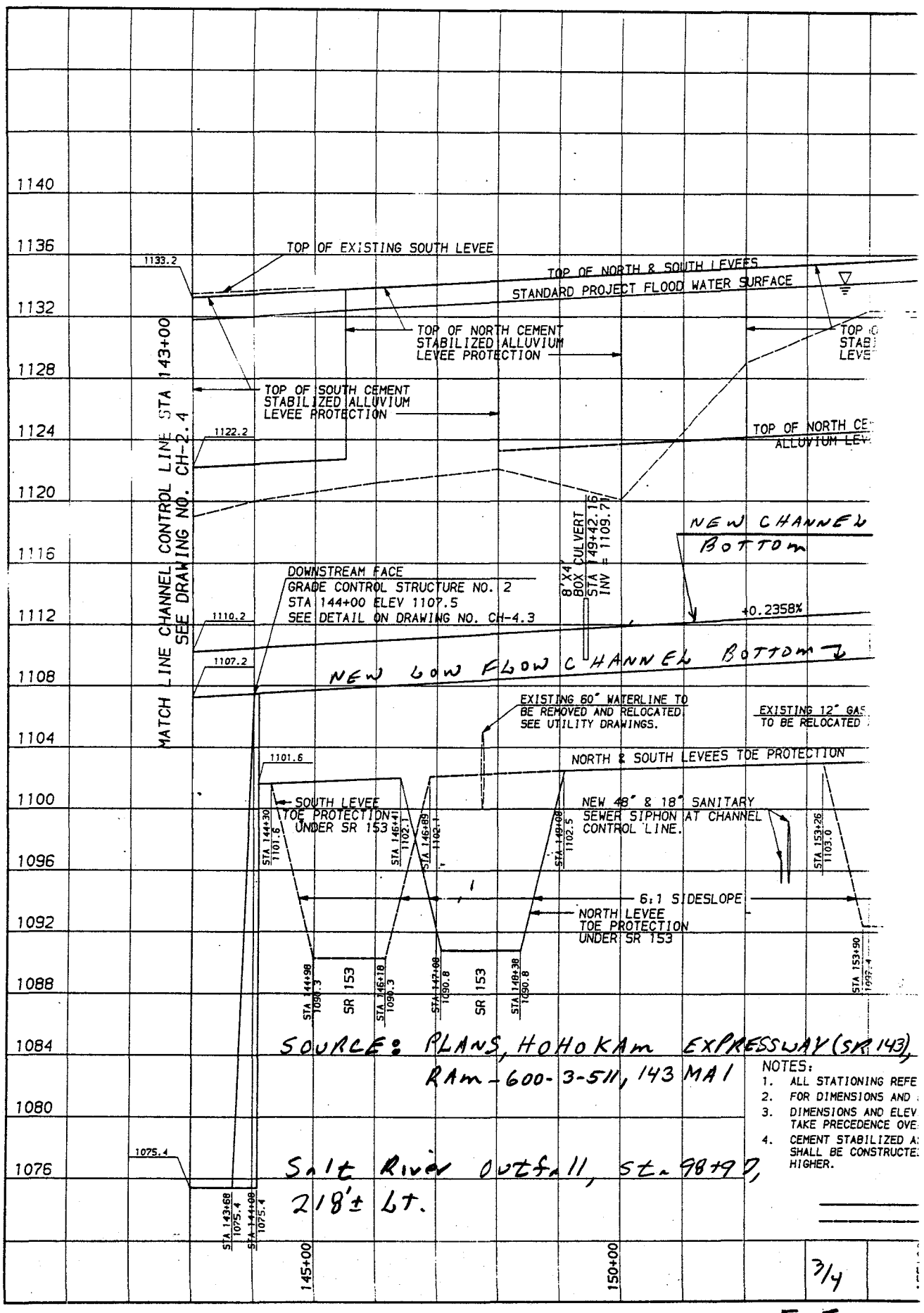
1140
1136
1132
1128
1124
1120
1116
1112
1108
1104
1100
1096
1092
1088
1084
1080
1076
TOP OF EXISTING SOUTH LEVEE
1133.2
TOP OF NORTH & SOUTH LEVEES
STANDARD PROJECT FLOOD WATER SURFACE
TOP OF NORTH CEMENT STABILIZED ALLUVIUM LEVEE PROTECTION
TOP OF SOUTH CEMENT STABILIZED ALLUVIUM LEVEE PROTECTION
1122.2
MATCH LINE CHANNEL CONTROL LINE STA 143+00
SEE DRAWING NO. CH-2.4
8'X4' BOX CULVERT
STA 149+42.16
INV = 1109.71
NEW CHANNEL BOTTOM
DOWNSTREAM FACE
GRADE CONTROL STRUCTURE NO. 2
STA 144+00 ELEV 1107.5
SEE DETAIL ON DRAWING NO. CH-4.3
1110.2
+0.2358%
1107.2
NEW LOW FLOW CHANNEL BOTTOM
EXISTING 60" WATERLINE TO BE REMOVED AND RELOCATED SEE UTILITY DRAWINGS.
EXISTING 12" GAS TO BE RELOCATED
1101.6
NORTH & SOUTH LEVEES TOE PROTECTION
SOUTH LEVEE TOE PROTECTION UNDER SR 153
NEW 48" & 18" SANITARY SEWER SIPHON AT CHANNEL CONTROL LINE.
STA 144+30 1101.6
STA 146+41 1102.1
STA 146+89 1102.1
STA 149+08 1102.5
STA 153+26 1103.0
6:1 SIDESLOPE
NORTH LEVEE TOE PROTECTION UNDER SR 153
STA 144+98 1090.3
SR 153
STA 146+18 1090.3
STA 147+88 1090.8
SR 153
STA 148+38 1090.8
STA 153+90 1097.4
SOURCE: PLANS, HOHOKAM EXPRESSWAY (SR 143), RAM-600-3-511, 143 MA1
1075.4
Salt River Outfall, St. 98+97, 218'± Lt.
STA 143+68 1075.4
STA 144+08 1075.4
145+00
150+00
NOTES:
1. ALL STATIONING REFE
2. FOR DIMENSIONS AND
3. DIMENSIONS AND ELEV TAKE PRECEDENCE OVE
4. CEMENT STABILIZED A SHALL BE CONSTRUCTE HIGHER.
3/4
E-5

F.H.W.A. REGION	STATE	PROJECT NO.	SHEET NO.	TOTAL SHEETS	AS BUILT
9	ARIZ.	RAM-601-0-501	91	199	
		153 MA 1			

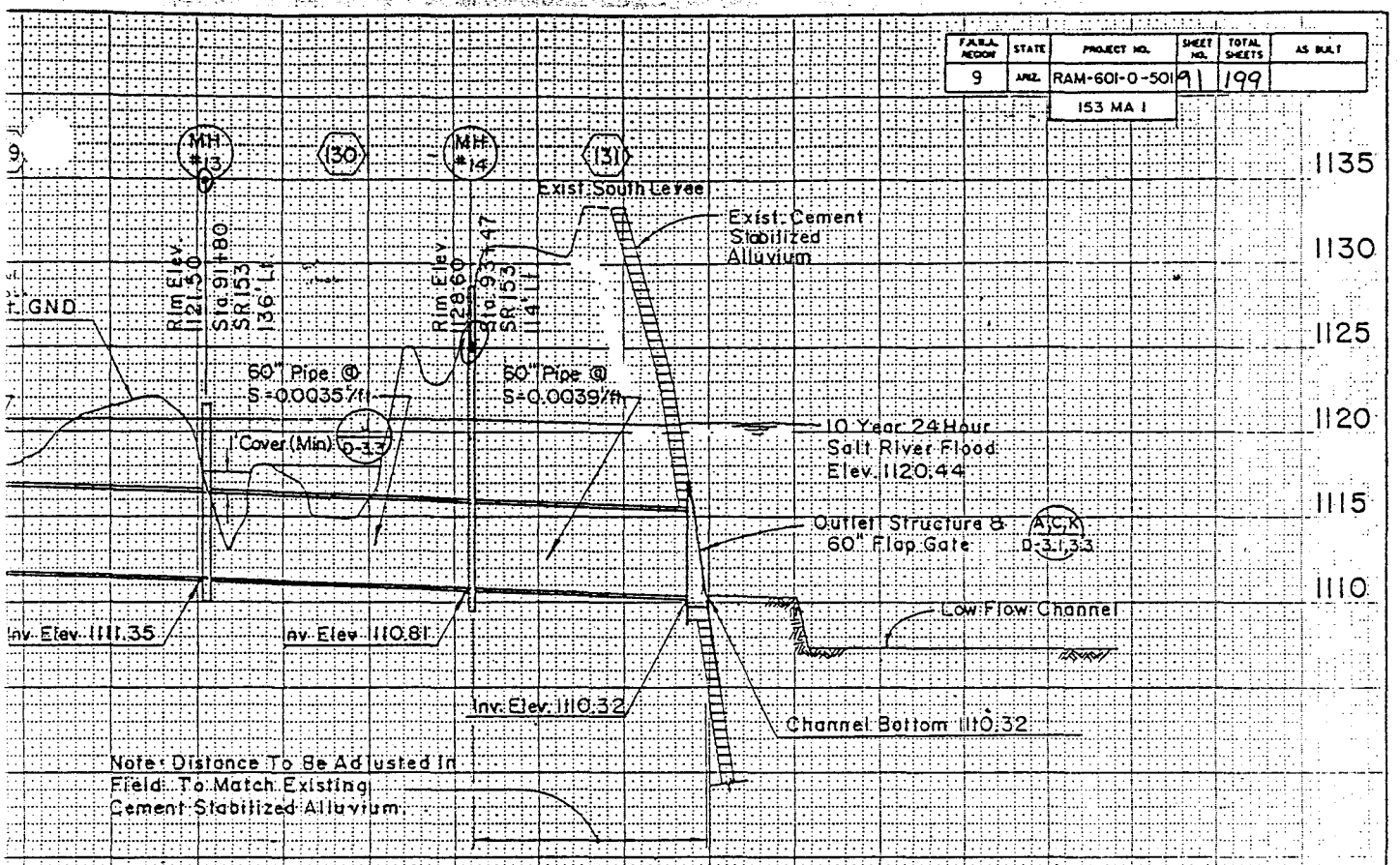

SOURCE: PLANS (PRE-100%), SKY HARBOR ACCESS ROAD (SR 153), RAM-601-0-501, 153 MA 103.

SALT RIVER OUTFALL, STA 98+97, 218' Lt. LT.

HORIZONTAL SCALE: 0 50 100

	NAME	DATE
DESIGN	M.R.S.	7/92
DRAWN	H.D.	7/92
CHECKED	M.R.S.	7/92

Svardrup CORPORATION

ARIZONA DEPARTMENT OF TRANSPORTATION HIGHWAYS DIVISION

DRAINAGE PROFILES

NOT FOR CONSTRUCTION

DATE

ROUTE: SR 153 | MILEPOST | LOCATION: UNIVERSITY DRIVE TO SKY HARBOR | DWG NO. D-2.4

TRACS NO. H 0881 01 C

___ OF ___ 4/4

E-6

PROBLEM STATEMENT: Determine energy loss coefficients at C.B.'s and M.H.'s in main storm drain from CB 103 TO OUTLET STRUCTURE AT THE SOUTH BANK OF THE SALT RIVER.

- CB 103

K_e (entrance loss) = 0.04 (Beveled or Bell mouth)

K_v (velocity loss) = 1.0 (Assumed, Inlet Flow only)

K_T (total K) = $K_e + K_v = 0.04 + 1 = 1.04$

- CB 103FU (Future Catch Basin)

Bend ∡ @ C.B. = 0°

$K_b = 0.0$

K_e = 0.04 (Beveled or Bell mouth)

- CB 104 FU (Future Catch Basin)

Bend ∡ @ C.B. = −54.5° (LT)

K_b = 0.41 (Bend @ M.H., No special shaping)

K_e = 0.04 (Beveled or Bell mouth)

$K_T = K_b + K_e = 0.41 + 0.04 = 0.45$

BRW

JOB SR 153 - Sky Harbor Expressway SHEET NO.

MADE BY D. Schaub DATE 12/21/93 JOB NO. 1956K13

CHECKED BY G. Goetz DATE 1/18/94 SEC. SHT. NO. 1/6

CALCULATIONS FOR Loss Coef's, CB103 TO Salt R. Outfall

- CB 104

Bend ∡ @ C.B. = + 112.25° (RT)

K_b = 1.4 ± (Bend @ m.H., no special shaping)

K_e = 0.04 (Beveled or Bell mouth)

$K_T = K_b + K_e = 1.4 + 0.04 = 1.44$ X

- MH 1

Bend ∡ @ m.H. = + 10.5° (RT)

K_b = 0.04 (Bend @ m.H., special shaping)

$K_T = K_b = 0.04$

- CB 106

Bend ∡ @ C.B. = 0.25° (RT)

K_b = 0.00

K_e = 0.04 (Beveled or Bell mouth)

$K_T = K_b + K_e = 0.00 + 0.04 = 0.04$ X

- MH 2

Bend ∡ @ m.H. = + 6.0° (RT)

K_b = 0.03 (Bend @ m.H., special shaping)

$K_T = K_b = 0.03$ X

BRW

JOB SR153-Sky Harbor Expressway SHEET NO.

MADE BY D. Schaub DATE 12/21/93 JOB NO. 19561K13

CHECKED BY G. Goetz DATE 1/18/94 SEC. SHT. NO. 2/6

CALCULATIONS FOR Loss Coef.'s, CB103 to Salt R. outfall

• m.H. 3

Bend ∡ @ m.H. = +7.25° (RT)

K_b = 0.03 (Bend @ m.H., Special Shaping)

$K_T = K_b$ = 0.03 ✗

• mH 4

Bend ∡ @ m.H. = +5.5° (RT)

K_b = 0.03 (Bend @ m.H., Special Shaping)

$K_T = K_b$ = 0.03 ✗

• mH 5

Bend ∡ @ m.H. = +5.0° (RT)

K_b = 0.03 (Bend @ m.H., Special Shaping)

$K_T = K_b$ = 0.03 ✗

• mH 7

Bend ∡ @ m.H. = +82.° (RT)

K_b = 0.87 (Bend @ m.H., Special Shaping)

$K_T = K_b$ = 0.87 ✗

BRW

JOB SR153-Sky Harbor Expressway SHEET NO.

MADE BY D. Schaub DATE 12/21/93 JOB NO.

CHECKED BY G. Goetz DATE 1/18/94 SEC. SHT. NO. 3/6

CALCULATIONS FOR Loss Coef.s, CB103 to Salt R. outfall

- MH 8

  Bend ∡ @ M.H. = −92.25° (LT)

  K_b = 1.04 (Bend @ M.H., Special Shaping)

  $K_T = K_b$ = 1.04 ✓

- MH 9

  Bend ∡ @ M.H. = −14° (LT)

  K_b = 0.06 (Bend @ M.H., Special Shaping)

  $K_T = K_b$ = 0.06 ✓

- MH 10

  Bend ∡ @ M.H. = −17.25° (LT)

  K_b = 0.07 (Bend @ M.H., Special Shaping)

  $K_T = K_b$ = 0.07 ✓

- MH 11

  Bend ∡ @ M.H. = −7.0° (LT)

  K_b = 0.03 (Bend @ M.H., Special Shaping)

  $K_T = K_b$ = 0.03 ✓

BRW

JOB SR153 - Sky Harbor Expressway SHEET NO.

MADE BY D. Schaub DATE 12/21/93 JOB NO.

CHECKED BY G. Goetz DATE 1/18/94 SEC. SHT. NO. 4/6

CALCULATIONS FOR Loss Coeffs, CB103 to Salt R. outfall

• mH 12

Bend ∡ @ m.H. = −0.75° (Lt)

$K_b = 0.0$

$K_T = K_b = 0.0$ X

• mH 13

Bend ∡ @ m.H. = +5.0° (RT)

$K_b = 0.03$ (Bend @ m.H., special shaping)

$K_T = K_b = 0.03$ X

• mH 14

Bend ∡ @ m.H. = +15.25° (RT)

$K_b = 0.06$ (Bend @ m.H., special shaping)

$K_T = K_b = 0.06$ X

• mH 15

Bend ∡ @ m.H. = +54.5° (RT)

$K_b = 0.41$ X (Bend @ m.H., special shaping)

BRW

JOB SR153 - Sky Harbor Expressway SHEET NO.

MADE BY D. Schaub DATE 12/21/93 JOB NO.

CHECKED BY G. Goetz DATE 1/18/94 SEC. SHT. NO. 5/6

CALCULATIONS FOR Loss Coeff, CB103 to Salt R. outfall

• OUTFALL TO SALT RIVER,

- 10-year flow on the Salt River will submerge the outlet structure and therefore outlet losses are produced.

$K_o = 1.0$ X

BRW

JOB SR 153 - Sky Harbor Expressway SHEET NO.

MADE BY D. Schaub DATE 12/21/93 JOB NO.

CHECKED BY G. Goetz DATE 1/18/94 SEC. SHT. NO. 6/6

CALCULATIONS FOR Loss Coeff, CB 103 to Salt R. outfall

E-12

CATCH BASIN 103 TO SALT RIVER OUTFALL

101/19/94 NOTE: INCLUDES FUTURE STORM DRAINS (103 FU & 115 FU) NEAR UNIVERSITY DRIVE

STORM SEWER SUMMARY REPORT
MAIN SD1 10YR STM/10YR TW
FILE: D1E10T10.STM
RCP (n = 0.012)

RAINFALL FILE: PHX1.RND
10 YEAR DESIGN STORM
I = 50.790/ (Tc + 9.250) ^ 0.830

LINE ID		FLOW RATE INFO						PIPE INFO					HYDRAULIC INFO		
LINE#	DESCRIPTION DOWNLINE#	INC AR TOT AR (ac)	RUNOFFC WEIGHTD C	INLTIME Tc (min)	INLT I TOTL I (in/h)	INC CIA TOT CIA (cfs)	INPUTQ TOTALQ (cfs)	UNIFORM FLOWCAP (cfs)	SIZE/ TYPE (in)	INVERT UP/DOWN (ft)	PIPE LEN (ft)	NVAL INVSLOP (ft/ft)	HGLSLOPE JLC (ft/ft)	HYD GRD UP/DOWN (ft)	VEL UP/DOWN (ft/s)
1	Pipe #140	0.0	0.00	0.00	8.01	0.00	78.20		72D	1111.73	122	0.012	0.000	1120.74	2.77
	DNLN = 0	0.0	-nan	23.66	2.80	0.00	78.20	211.8	72D	1111.47		0.002	1.00	1120.70	2.77
2	Pipe #139	0.0	0.00	0.00	8.01	0.00	78.20		72D	1112.34	275	0.012	0.000	1120.86	2.77
	DNLN = 1	0.0	-nan	22.00	2.92	0.00	78.20	214.3	72D	1111.74		0.002	0.41	1120.78	2.77
3	Pipe #136	0.0	0.00	0.00	8.01	0.00	71.80		72D	1113.50	522	0.012	0.000	1121.00	2.54
	DNLN = 2	0.0	-nan	18.58	3.21	0.00	71.80	215.4	72D	1112.35		0.002	0.06	1120.87	2.54
4	Pipe #133	0.0	0.00	0.00	8.01	0.00	65.60		72D	1114.15	300	0.012	0.000	1121.06	2.32
	DNLN = 3	0.0	-nan	16.42	3.44	0.00	65.60	213.6	72D	1113.50		0.002	0.03	1121.00	2.32
5	Pipe #131	0.0	0.00	0.00	8.01	0.00	64.00		72D	1114.70	250	0.012	0.000	1121.11	2.26
	DNLN = 4	0.0	-nan	14.58	3.65	0.00	64.00	213.2	72D	1114.16		0.002	0.00	1121.06	2.26
6	Pipe #129	0.0	0.00	0.00	8.01	0.00	60.40		72D	1115.25	250	0.012	0.000	1121.15	2.14
	DNLN = 5	0.0	-nan	12.63	3.92	0.00	60.40	213.3	72D	1114.71		0.002	0.03	1121.11	2.14
7	Pipe #128	0.0	0.00	0.00	8.01	0.00	60.40		72D	1116.06	369	0.012	0.000	1121.20	2.34
	DNLN = 6	0.0	-nan	9.89	4.38	0.00	60.40	213.7	72D	1115.26		0.002	0.07	1121.16	2.14
8	Pipe #125	0.0	0.00	0.00	8.01	0.00	23.70		42D	1119.44	273	0.012	0.001	1121.37	4.37
	DNLN = 7	0.0	-nan	8.71	4.62	0.00	23.70	54.0	42D	1118.77		0.002	0.06	1121.20	3.32
9	Pipe #124	0.0	0.00	0.00	8.01	0.00	23.70		42D	1119.99	217	0.012	0.001	1121.81	4.68
	DNLN = 8	0.0	-nan	7.84	4.81	0.00	23.70	54.4	42D	1119.45		0.002	1.04	1121.67	3.67
10	Pipe #120	0.0	0.00	0.00	8.01	0.00	21.40		42D	1120.14	60	0.012	0.000	1122.13	3.79
	DNLN = 9	0.0	-nan	7.57	4.88	0.00	21.40	52.7	42D	1120.00		0.002	0.87	1122.11	3.53
11	Pipe #118	0.0	0.00	0.00	8.01	0.00	19.80		42D	1120.54	162	0.012	0.001	1122.23	4.30
	DNLN = 10	0.0	-nan	6.88	5.05	0.00	19.80	53.5	42D	1120.15		0.002	0.03	1122.14	3.51
12	Pipe #116	0.0	0.00	0.00	8.01	0.00	18.80		42D	1120.88	136	0.012	0.001	1122.36	4.85
	DNLN = 11	0.0	-nan	6.37	5.19	0.00	18.80	53.7	42D	1120.55		0.002	0.03	1122.24	4.09
13	Pipe #112	0.0	0.00	0.00	8.01	0.00	12.30		30D	1121.16	112	0.012	0.002	1122.54	4.41
	DNLN = 12	0.0	-nan	5.93	5.31	0.00	12.30	21.8	30D	1120.89		0.002	0.03	1122.37	4.06

MAIN SD1 10YR STM/10YR TW
FILE: D1E10T10.STM

RAINFALL FILE: PHX1.RND 10 YEAR DESIGN STORM I = 50.790/ (Tc + 9.250) ^ 0.830

LINE ID		FLOW RATE INFO						PIPE INFO					HYDRAULIC INFO		
LINE#	DESCRIPTION DOWNLINE#	INC AR TOT AR (ac)	RUNOFFC WEIGHTD C	INLTIME Tc (min)	INLT I TOTL I (in/h)	INC CIA TOT CIA (cfs)	INPUTQ TOTALQ (cfs)	UNIFORM FLOWCAP (cfs)	SIZE/ TYPE (in)	INVERT UP/DOWN (ft)	PIPE LEN (ft)	NVAL INVSLOP (ft/ft)	HGLSLOPE JLC (ft/ft)	HYD GRD UP/DOWN (ft)	VEL UP/DOWN (ft/s)
14	Pipe #110	0.0	0.00	0.00	8.01	0.00	11.50		30D	1122.03	346	0.012	0.002	1123.28	4.71
	DNLN = 13	0.0	-nan	4.62	5.72	0.00	11.50	22.2	30D	1121.17		0.002	0.03	1122.55	4.13
15	Pipe #107	0.0	0.00	0.00	8.01	0.00	10.40		30D	1122.73	280	0.012	0.002	1123.92	4.52
	DNLN = 14	0.0	-nan	3.56	6.12	0.00	10.40	22.1	30D	1122.04		0.002	0.04	1123.29	4.24
16	Pipe #105	0.0	0.00	0.00	8.01	0.00	6.90		24D	1123.35	239	0.012	0.002	1124.39	4.18
	DNLN = 15	0.0	-nan	2.52	6.56	0.00	6.90	12.4	24D	1122.74		0.003	0.04	1123.93	3.53
17	Pipe #104	0.0	0.00	0.00	8.01	0.00	5.20		24D	1123.49	32	0.024	0.002	1124.86	2.27
	DNLN = 16	0.0	-nan	2.29	6.67	0.00	5.20	6.8	24D	1123.39		0.003	1.44	1124.78	2.23
18	Pipe #103fu	0.0	0.00	0.00	8.01	0.00	2.60		24D	1123.92	118	0.012	0.000	1124.91	1.68
	DNLN = 17	0.0	-nan	0.88	7.43	0.00	2.60	14.8	24D	1123.49		0.004	0.45	1124.89	1.10
19	Pipe #103	0.0	0.00	0.00	8.01	0.00	0.80		24D	1124.01	29	0.012	0.000	1124.91	0.59
	DNLN = 18	0.0	-nan	0.00	8.01	0.00	0.80	13.6	24D	1123.92		0.003	0.04	1124.91	0.52
20	CB #103	0.0	0.00	0.00	8.01	0.00	0.80		24D	1124.02	0	0.024	1.001	1124.92	0.59
	DNLN = 19	0.0	-nan	0.00	8.01	0.00	0.80	0.0	24D	1124.02		0.000	1.04	1124.91	0.59
21	Pipe #138	0.0	0.00	0.00	8.01	0.00	6.34		24D	1136.76	64	0.024	0.260	1137.65	4.68
	DNLN = 2	0.0	-nan	0.30	7.80	0.00	6.34	72.7	24D	1115.50		0.352	1.30	1121.02	2.02
22	Pipe #137	0.0	0.00	0.00	8.01	0.00	3.27		24D	1137.42	59	0.012	0.007	1138.07	3.77
	DNLN = 21	0.0	-nan	0.00	8.01	0.00	3.27	23.9	24D	1136.86		0.009	0.04	1137.67	2.76
23	Pipe #135	0.0	0.00	0.00	8.01	0.00	6.21		24D	1133.03	40	0.024	0.320	1133.91	4.65
	DNLN = 3	0.0	-nan	0.31	7.80	0.00	6.21	82.0	24D	1116.67		0.448	1.30	1121.13	1.98
24	Pipe #134	0.0	0.00	0.00	8.01	0.00	3.15		24D	1133.74	59	0.012	0.008	1134.38	3.73
	DNLN = 23	0.0	-nan	0.00	8.01	0.00	3.15	24.9	24D	1133.13		0.010	0.04	1133.93	2.70
25	Pipe #132	0.0	0.00	0.00	8.01	0.00	1.63		24D	1130.95	39	0.024	0.267	1131.59	3.06
	DNLN = 4	0.0	-nan	0.00	8.01	0.00	1.63	74.4	24D	1117.45		0.369	1.30	1121.17	0.52
26	Pipe #130p1	0.0	0.00	0.00	8.01	0.00	3.55		24D	1125.76	29	0.024	0.180	1126.43	3.87
	DNLN = 5	0.0	-nan	0.83	7.46	0.00	3.55	65.9	24D	1117.70		0.289	1.30	1121.22	1.13

STORM SEWER SUMMARY REPORT (continued)
MAIN SD1 10YR STM/10YR TW
FILE: D1E10T10.STM

RAINFALL FILE: PHX1.RND 10 YEAR DESIGN STORM I = 50.790/ (Tc + 9.250) ^ 0.830

LINE ID		FLOW RATE INFO						PIPE INFO					HYDRAULIC INFO		
LINE#	DESCRIPTION DOWNLINE#	INC AR TOT AR (ac)	RUNOFFC WEIGHTD C	INLTIME Tc (min)	INLT I TOTL I (in/h)	INC CIA TOT CIA (cfs)	INPUTQ TOTALQ (cfs)	UNIFORM FLOWCAP (cfs)	SIZE/ TYPE (in)	INVERT UP/DOWN (ft)	PIPE LEN (ft)	NVAL INVSLOP (ft/ft)	HGLSLOPE JLC (ft/ft)	HYD GRD UP/DOWN (ft)	VEL UP/DOWN (ft/s)
27	Pipe #130p2	0.0	0.00	0.00	8.01	0.00	3.55		24D	1126.46	139	0.024	0.009	1127.69	1.75
	DNLN = 26	0.0	-nan	0.00	8.01	0.00	3.55	8.7	24D	1125.76		0.005	0.04	1126.44	3.80
28	Pipe #127	0.0	0.00	0.00	8.01	0.00	13.01		24D	1120.73	97	0.012	0.007	1122.01	6.14
	DNLN = 7	0.0	-nan	0.39	7.74	0.00	13.01	40.0	24D	1118.14		0.027	1.30	1121.31	4.14
29	Pipe #126	0.0	0.00	0.00	8.01	0.00	6.60		24D	1121.30	95	0.012	0.002	1122.22	4.75
	DNLN = 28	0.0	-nan	0.00	8.01	0.00	6.60	17.2	24D	1120.83		0.005	0.04	1122.03	3.35
30	Pipe #123	0.0	0.00	0.00	8.01	0.00	5.86		24D	1121.70	160	0.012	0.002	1122.56	4.56
	DNLN = 9	0.0	-nan	0.68	7.56	0.00	5.86	24.5	24D	1120.10		0.010	1.30	1122.25	1.87
31	Pipe #122	0.0	0.00	0.00	8.01	0.00	1.06		24D	1124.07	65	0.012	0.025	1124.58	2.71
	DNLN = 30	0.0	-nan	0.00	8.01	0.00	1.06	46.8	24D	1121.70		0.036	1.30	1122.98	0.50
32	Pipe #121	0.0	0.00	0.00	8.01	0.00	20.20		36D	1120.60	9	0.024	0.030	1122.62	5.41
	DNLN = 10	0.0	-nan	0.00	8.01	0.00	20.20	83.5	36D	1120.12		0.053	1.00	1122.35	3.58
33	Pipe #119	0.0	0.00	0.00	8.01	0.00	1.59		24D	1126.09	114	0.012	0.038	1126.72	3.04
	DNLN = 10	0.0	-nan	0.00	8.01	0.00	1.59	52.0	24D	1120.96		0.045	1.30	1122.42	0.65
34	Pipe #117	0.0	0.00	0.00	8.01	0.00	1.02		24D	1124.50	43	0.012	0.056	1125.00	2.68
	DNLN = 11	0.0	-nan	0.00	8.01	0.00	1.02	65.8	24D	1121.41		0.072	1.30	1122.60	0.52
35	Pipe #115	0.0	0.00	0.00	8.01	0.00	6.49		24D	1122.68	125	0.012	0.006	1123.58	4.72
	DNLN = 12	0.0	-nan	0.46	7.70	0.00	6.49	22.2	24D	1121.65		0.008	1.30	1122.84	3.34
36	Pipe #~~115fu~~ #175	0.0	0.00	0.00	8.01	0.00	4.24		24D	1124.04	51	0.012	0.005	1124.71	4.59
	DNLN = 35	0.0	-nan	0.27	7.82	0.00	4.24	17.5	24D	1123.78		0.005	0.04	1124.45	4.59
37	Pipe #113	0.0	0.00	0.00	8.01	0.00	2.57		24D	1124.43	57	0.012	0.005	1125.00	3.50
	DNLN = 36	0.0	-nan	0.00	8.01	0.00	2.57	17.5	24D	1124.14		0.005	0.00	1124.71	3.48
38	Pipe #111	0.0	0.00	0.00	8.01	0.00	0.76		24D	1124.72	39	0.012	0.057	1125.15	2.47
	DNLN = 13	0.0	-nan	0.00	8.01	0.00	0.76	71.4	24D	1121.42		0.085	1.30	1122.94	0.30
39	Pipe #106	0.0	0.00	0.00	8.01	0.00	3.45		24D	1122.90	12	0.012	0.003	1124.37	1.44
	DNLN = 15	0.0	-nan	0.00	8.01	0.00	3.45	17.3	24D	1122.84		0.005	1.30	1124.33	1.37

MAIN SD1 10YR STM/10YR TW

Data File : D1E10T10.STM Return Period: 10 Yrs

Rainfall file: PHX1.RND I = 50.790/ (Tc + 9.250) ^ 0.830

LINE 1 STORM SEWER HYDRAULIC REPORT

Diameter (in) = 72 N = 0.012 Critical Depth (in) = 28.24

Length (ft) = 122 Kj (JLC) = 1.0 Downstream Line # = OUTFALL

	INVERT (ft)	DEPTH (in)	HGL (ft)	EGL (ft)	CROWN (ft)	NAT GND (ft)	AREA (ft^2)	VEL (ft/s)
UPSTREAM	1111.73	72.00	1120.74	1120.85	1117.73	1125.00	28.27	2.77
DNSTREAM	1111.47	72.00	1120.70	1120.82	1117.47	1119.47	28.27	2.77
SLOPE(%)	0.213		0.029	0.029		4.533		

		CATCHMENT	CUMULATIVE		
Area (ac)	=	0.0	0.0		
Drainage Time (min)	=	0.00	23.66		
Intensity (in/h)	=	0.00	2.80	TOTAL	UNIFORM
Runoff Coefficient	=	0.00	0.00	FLOW	CAPACITY
Rational Flow (cfs)	=	0.00	0.00	(cfs)	(cfs)
Known Flow (cfs)	=	78.20	78.20	78.20	211.84

Note: Upstream surcharge (ft) = 3.01

STORM SEWER INLET REPORT

FLOW RESULTS (cfs)

Flow from Catchment	=	0.00	PONDING WIDTH (ft)	=	0.00
Carryover from previous inlet	=	0.00	DEPTH AT CURB (ft)	=	0.00
Total flow to current inlet	=	0.00	EFFICIENCY (%)		
Intercepted by current inlet	=	0.00	Curb = *		
Bypassed by current inlet	=	0.00	Grate = *	Total =	-inf
			Slot = *		

INPUT PARAMETERS:

Inlet Type	= NONE IN SAG		Longitudinal Slope (ft/ft)	=	0.000
Gutter Width (ft)	=	0.000	Pavement Cross Slope (ft/ft)	=	0.000
Inlet n-value	=	0.016	Normal Gutter XSlope (ft/ft)	=	0.000
Downstream Inlet number	=	0	Gutter depression (in)	=	0.00

MAIN SD1 10YR STM/10YR TW

Data File : D1E10T10.STM Return Period: 10 Yrs

Rainfall file: PHX1.RND I = 50.790/ (Tc + 9.250) ^ 0.830

LINE 2 STORM SEWER HYDRAULIC REPORT

Diameter (in) = 72 N = 0.012 Critical Depth (in) = 28.24

Length (ft) = 275 Kj (JLC) = 0.4 Downstream Line # = 1

	INVERT (ft)	DEPTH (in)	HGL (ft)	EGL (ft)	CROWN (ft)	NAT GND (ft)	AREA (ft^2)	VEL (ft/s)
UPSTREAM	1112.34	72.00	1120.86	1120.98	1118.34	1123.20	28.27	2.77
DNSTREAM	1111.74	72.00	1120.78	1120.90	1117.74	1125.00	28.27	2.77
SLOPE(%)	0.218		0.029	0.029		-0.655		

		CATCHMENT	CUMULATIVE		
Area (ac)	=	0.0	0.0		
Drainage Time (min)	=	0.00	22.00		
Intensity (in/h)	=	0.00	2.92	TOTAL	UNIFORM
Runoff Coefficient	=	0.00	0.00	FLOW	CAPACITY
Rational Flow (cfs)	=	0.00	0.00	(cfs)	(cfs)
Known Flow (cfs)	=	78.20	78.20	78.20	214.34

Note: Upstream surcharge (ft) = 2.52

STORM SEWER INLET REPORT

FLOW RESULTS (cfs)

Flow from Catchment	=	0.00	PONDING WIDTH (ft)	=	0.00
Carryover from previous inlet	=	0.00	DEPTH AT CURB (ft)	=	0.00
Total flow to current inlet	=	0.00	EFFICIENCY (%)		
Intercepted by current inlet	=	0.00	Curb = *		
Bypassed by current inlet	=	0.00	Grate = *	Total =	-inf
			Slot = *		

INPUT PARAMETERS:

Inlet Type	= NONE IN SAG		Longitudinal Slope (ft/ft)	=	0.000
Gutter Width (ft)	=	0.000	Pavement Cross Slope (ft/ft)	=	0.000
Inlet n-value	=	0.016	Normal Gutter XSlope (ft/ft)	=	0.000
Downstream Inlet number	=	1	Gutter depression (in)	=	0.00

MAIN SD1 10YR STM/10YR TW

Data File : D1E10T10.STM Return Period: 10 Yrs

Rainfall file: PHX1.RND I = 50.790/ (Tc + 9.250) ^ 0.830

LINE 3 STORM SEWER HYDRAULIC REPORT

Diameter (in) = 72 N = 0.012 Critical Depth (in) = 27.06

Length (ft) = 522 Kj (JLC) = 0.1 Downstream Line # = 2

	INVERT (ft)	DEPTH (in)	HGL (ft)	EGL (ft)	CROWN (ft)	NAT GND (ft)	AREA (ft^2)	VEL (ft/s)
UPSTREAM	1113.50	72.00	1121.00	1121.10	1119.50	1124.15	28.27	2.54
DNSTREAM	1112.35	72.00	1120.87	1120.97	1118.35	1123.20	28.27	2.54
SLOPE(%)	0.220		0.024	0.024		0.182		

		CATCHMENT	CUMULATIVE		
Area (ac)	=	0.0	0.0		
Drainage Time (min)	=	0.00	18.58		
Intensity (in/h)	=	0.00	3.21	TOTAL	UNIFORM
Runoff Coefficient	=	0.00	0.00	FLOW	CAPACITY
Rational Flow (cfs)	=	0.00	0.00	(cfs)	(cfs)
Known Flow (cfs)	=	71.80	71.80	71.80	215.38

Note: Upstream surcharge (ft) = 1.50

STORM SEWER INLET REPORT

FLOW RESULTS (cfs)

Flow from Catchment	=	0.00
Carryover from previous inlet	=	0.00
Total flow to current inlet	=	0.00
Intercepted by current inlet	=	0.00
Bypassed by current inlet	=	0.00

PONDING WIDTH (ft) = 0.00

DEPTH AT CURB (ft) = 0.00

EFFICIENCY (%)

Curb = *

Grate = * Total = -inf

Slot = *

INPUT PARAMETERS:

Inlet Type	= NONE IN SAG	Longitudinal Slope (ft/ft)	= 0.000
Gutter Width (ft)	= 0.000	Pavement Cross Slope (ft/ft)	= 0.000
Inlet n-value	= 0.016	Normal Gutter XSlope (ft/ft)	= 0.000
Downstream Inlet number	= 2	Gutter depression (in)	= 0.00

MAIN SD1 10YR STM/10YR TW

Data File : D1E10T10.STM Return Period: 10 Yrs

Rainfall file: PHX1.RND I = 50.790/ (Tc + 9.250) ^ 0.830

LINE 4 STORM SEWER HYDRAULIC REPORT

Diameter (in) = 72 N = 0.012 Critical Depth (in) = 25.86

Length (ft) = 300 Kj (JLC) = 0.0 Downstream Line # = 3

	INVERT (ft)	DEPTH (in)	HGL (ft)	EGL (ft)	CROWN (ft)	NAT GND (ft)	AREA (ft^2)	VEL (ft/s)
UPSTREAM	1114.15	72.00	1121.06	1121.15	1120.15	1125.40	28.27	2.32
DNSTREAM	1113.50	72.00	1121.00	1121.09	1119.50	1124.15	28.27	2.32
SLOPE(%)	0.217		0.020	0.020		0.417		

		CATCHMENT	CUMULATIVE		
Area (ac)	=	0.0	0.0		
Drainage Time (min)	=	0.00	16.42		
Intensity (in/h)	=	0.00	3.44	TOTAL	UNIFORM
Runoff Coefficient	=	0.00	0.00	FLOW	CAPACITY
Rational Flow (cfs)	=	0.00	0.00	(cfs)	(cfs)
Known Flow (cfs)	=	65.60	65.60	65.60	213.60

Note: Upstream surcharge (ft) = 0.91

STORM SEWER INLET REPORT

FLOW RESULTS (cfs)

Flow from Catchment	=	0.00	PONDING WIDTH (ft)	=	0.00
Carryover from previous inlet	=	0.00	DEPTH AT CURB (ft)	=	0.00
Total flow to current inlet	=	0.00	EFFICIENCY (%)		
Intercepted by current inlet	=	0.00	Curb = *		
Bypassed by current inlet	=	0.00	Grate = *	Total =	-inf
			Slot = *		

INPUT PARAMETERS:

Inlet Type	= NONE IN SAG		Longitudinal Slope (ft/ft)	=	0.000
Gutter Width (ft)	=	0.000	Pavement Cross Slope (ft/ft)	=	0.000
Inlet n-value	=	0.016	Normal Gutter XSlope (ft/ft)	=	0.000
Downstream Inlet number	=	3	Gutter depression (in)	=	0.00

MAIN SD1 10YR STM/10YR TW

Data File : D1E10T10.STM Return Period: 10 Yrs

Rainfall file: PHX1.RND I = 50.790/ (Tc + 9.250) ^ 0.830

LINE 5 STORM SEWER HYDRAULIC REPORT

Diameter (in) = 72 N = 0.012 Critical Depth (in) = 25.55

Length (ft) = 250 Kj (JLC) = 0.0 Downstream Line # = 4

	INVERT (ft)	DEPTH (in)	HGL (ft)	EGL (ft)	CROWN (ft)	NAT GND (ft)	AREA (ft^2)	VEL (ft/s)
UPSTREAM	1114.70	72.00	1121.11	1121.19	1120.70	1125.45	28.27	2.26
DNSTREAM	1114.16	72.00	1121.06	1121.14	1120.16	1125.40	28.27	2.26
SLOPE(%)	0.216		0.019	0.019		0.020		

		CATCHMENT	CUMULATIVE		
Area (ac)	=	0.0	0.0		
Drainage Time (min)	=	0.00	14.58		
Intensity (in/h)	=	0.00	3.65	TOTAL	UNIFORM
Runoff Coefficient	=	0.00	0.00	FLOW	CAPACITY
Rational Flow (cfs)	=	0.00	0.00	(cfs)	(cfs)
Known Flow (cfs)	=	64.00	64.00	64.00	213.25

Note: Upstream surcharge (ft) = 0.41

STORM SEWER INLET REPORT

FLOW RESULTS (cfs)

Flow from Catchment	=	0.00	PONDING WIDTH (ft)	=	0.00
Carryover from previous inlet	=	0.00	DEPTH AT CURB (ft)	=	0.00
Total flow to current inlet	=	0.00	EFFICIENCY (%)		
Intercepted by current inlet	=	0.00	Curb = *		
Bypassed by current inlet	=	0.00	Grate = *	Total =	-inf
			Slot = *		

INPUT PARAMETERS:

Inlet Type	= NONE IN SAG		Longitudinal Slope (ft/ft)	=	0.000
Gutter Width (ft)	=	0.000	Pavement Cross Slope (ft/ft)	=	0.000
Inlet n-value	=	0.016	Normal Gutter XSlope (ft/ft)	=	0.000
Downstream Inlet number	=	4	Gutter depression (in)	=	0.00

Data File : D1E10T10.STM Return Period: 10 Yrs
Rainfall file: PHX1.RND I = 50.790/ (Tc + 9.250) ^ 0.830

LINE 6 STORM SEWER HYDRAULIC REPORT

Diameter (in) = 72 N = 0.012 Critical Depth (in) = 24.82
Length (ft) = 250 Kj (JLC) = 0.0 Downstream Line # = 5

	INVERT (ft)	DEPTH (in)	HGL (ft)	EGL (ft)	CROWN (ft)	NAT GND (ft)	AREA (ft^2)	VEL (ft/s)
UPSTREAM	1115.25	70.82	1121.15	1121.22	1121.25	1126.00	28.17	2.14
DNSTREAM	1114.71	72.00	1121.11	1121.18	1120.71	1125.45	28.27	2.14
SLOPE(%)	0.216		0.015	0.015		0.220		

		CATCHMENT	CUMULATIVE		
Area (ac)	=	0.0	0.0		
Drainage Time (min)	=	0.00	12.63		
Intensity (in/h)	=	0.00	3.92	TOTAL	UNIFORM
Runoff Coefficient	=	0.00	0.00	FLOW	CAPACITY
Rational Flow (cfs)	=	0.00	0.00	(cfs)	(cfs)
Known Flow (cfs)	=	60.40	60.40	60.40	213.27

Note: Transitional flow exists in this line

STORM SEWER INLET REPORT

FLOW RESULTS (cfs)
Flow from Catchment = 0.00
Carryover from previous inlet = 0.00
Total flow to current inlet = 0.00
Intercepted by current inlet = 0.00
Bypassed by current inlet = 0.00

PONDING WIDTH (ft) = 0.00
DEPTH AT CURB (ft) = 0.00
EFFICIENCY (%)
Curb = *
Grate = * Total = -inf
Slot = *

INPUT PARAMETERS:
Inlet Type = NONE IN SAG
Gutter Width (ft) = 0.000
Inlet n-value = 0.016
Downstream Inlet number = 5
Longitudinal Slope (ft/ft) = 0.000
Pavement Cross Slope (ft/ft) = 0.000
Normal Gutter XSlope (ft/ft) = 0.000
Gutter depression (in) = 0.00

MAIN SD1 10YR STM/10YR TW

Data File : D1E10T10.STM Return Period: 10 Yrs

Rainfall file: PHX1.RND I = 50.790/ (Tc + 9.250) ^ 0.830

LINE 7 STORM SEWER HYDRAULIC REPORT

Diameter (in) = 72 N = 0.012 Critical Depth (in) = 24.82

Length (ft) = 369 Kj (JLC) = 0.1 Downstream Line # = 6

	INVERT (ft)	DEPTH (in)	HGL (ft)	EGL (ft)	CROWN (ft)	NAT GND (ft)	AREA (ft^2)	VEL (ft/s)
UPSTREAM	1116.06	61.68	1121.20	1121.29	1122.06	1128.00	25.78	2.34
DNSTREAM	1115.26	70.76	1121.16	1121.23	1121.26	1126.00	28.17	2.14
SLOPE(%)	0.217		0.012	0.015		0.542		

		CATCHMENT	CUMULATIVE		
Area (ac)	=	0.0	0.0		
Drainage Time (min)	=	0.00	9.89		
Intensity (in/h)	=	0.00	4.38	TOTAL	UNIFORM
Runoff Coefficient	=	0.00	0.00	FLOW	CAPACITY
Rational Flow (cfs)	=	0.00	0.00	(cfs)	(cfs)
Known Flow (cfs)	=	60.40	60.40	60.40	213.67

STORM SEWER INLET REPORT

FLOW RESULTS (cfs)

Flow from Catchment	=	0.00	PONDING WIDTH (ft)	=	0.00
Carryover from previous inlet	=	0.00	DEPTH AT CURB (ft)	=	0.00
Total flow to current inlet	=	0.00	EFFICIENCY (%)		
Intercepted by current inlet	=	0.00	Curb = *		
Bypassed by current inlet	=	0.00	Grate = *	Total =	-inf
			Slot = *		

INPUT PARAMETERS:

Inlet Type	= NONE IN SAG		Longitudinal Slope (ft/ft)	=	0.000
Gutter Width (ft)	=	0.000	Pavement Cross Slope (ft/ft)	=	0.000
Inlet n-value	=	0.016	Normal Gutter XSlope (ft/ft)	=	0.000
Downstream Inlet number	=	6	Gutter depression (in)	=	0.00

MAIN SD1 10YR STM/10YR TW

Data File : D1E10T10.STM Return Period: 10 Yrs

Rainfall file: PHX1.RND I = 50.790/ (Tc + 9.250) ^ 0.830

LINE 8 STORM SEWER HYDRAULIC REPORT

Diameter (in) = 42 N = 0.012 Critical Depth (in) = 17.88

Length (ft) = 273 Kj (JLC) = 0.1 Downstream Line # = 7

	INVERT (ft)	DEPTH (in)	HGL (ft)	EGL (ft)	CROWN (ft)	NAT GND (ft)	AREA (ft^2)	VEL (ft/s)
UPSTREAM	1119.44	23.12	1121.37	1121.66	1122.94	1127.30	5.43	4.37
DNSTREAM	1118.77	29.22	1121.20	1121.38	1122.27	1128.00	7.15	3.32
SLOPE(%)	0.245		0.059	0.105		-0.256		

		CATCHMENT	CUMULATIVE	TOTAL FLOW (cfs)	UNIFORM CAPACITY (cfs)
Area (ac)	=	0.0	0.0		
Drainage Time (min)	=	0.00	8.71		
Intensity (in/h)	=	0.00	4.62		
Runoff Coefficient	=	0.00	0.00		
Rational Flow (cfs)	=	0.00	0.00		
Known Flow (cfs)	=	23.70	23.70	23.70	53.99

STORM SEWER INLET REPORT

FLOW RESULTS (cfs)

Flow from Catchment	=	0.00	PONDING WIDTH (ft)	=	0.00
Carryover from previous inlet	=	0.00	DEPTH AT CURB (ft)	=	0.00
Total flow to current inlet	=	0.00	EFFICIENCY (%)		
Intercepted by current inlet	=	0.00	Curb = *		
Bypassed by current inlet	=	0.00	Grate = *	Total =	-inf
			Slot = *		

INPUT PARAMETERS:

Inlet Type	= NONE IN SAG		Longitudinal Slope (ft/ft)	=	0.000
Gutter Width (ft)	=	0.000	Pavement Cross Slope (ft/ft)	=	0.000
Inlet n-value	=	0.016	Normal Gutter XSlope (ft/ft)	=	0.000
Downstream Inlet number	=	7	Gutter depression (in)	=	0.00

MAIN SD1 10YR STM/10YR TW

Data File : D1E10T10.STM Return Period: 10 Yrs

Rainfall file: PHX1.RND I = 50.790/ (Tc + 9.250) ^ 0.830

LINE 9 STORM SEWER HYDRAULIC REPORT

Diameter (in) = 42 N = 0.012 Critical Depth (in) = 17.88

Length (ft) = 217 Kj (JLC) = 1.0 Downstream Line # = 8

	INVERT (ft)	DEPTH (in)	HGL (ft)	EGL (ft)	CROWN (ft)	NAT GND (ft)	AREA (ft^2)	VEL (ft/s)
UPSTREAM	1119.99	21.86	1121.81	1122.15	1123.49	1129.10	5.06	4.68
DNSTREAM	1119.45	26.69	1121.67	1121.88	1122.95	1127.30	6.45	3.67
SLOPE(%)	0.249		0.063	0.124		0.829		

		CATCHMENT	CUMULATIVE		
Area (ac)	=	0.0	0.0		
Drainage Time (min)	=	0.00	7.84		
Intensity (in/h)	=	0.00	4.81	TOTAL	UNIFORM
Runoff Coefficient	=	0.00	0.00	FLOW	CAPACITY
Rational Flow (cfs)	=	0.00	0.00	(cfs)	(cfs)
Known Flow (cfs)	=	23.70	23.70	23.70	54.37

STORM SEWER INLET REPORT

FLOW RESULTS (cfs)

Flow from Catchment	=	0.00	PONDING WIDTH (ft)	=	0.00
Carryover from previous inlet	=	0.00	DEPTH AT CURB (ft)	=	0.00
Total flow to current inlet	=	0.00	EFFICIENCY (%)		
Intercepted by current inlet	=	0.00	Curb = *		
Bypassed by current inlet	=	0.00	Grate = *	Total =	-inf
			Slot = *		

INPUT PARAMETERS:

Inlet Type	= NONE IN SAG		Longitudinal Slope (ft/ft)	=	0.000
Gutter Width (ft)	=	0.000	Pavement Cross Slope (ft/ft)	=	0.000
Inlet n-value	=	0.016	Normal Gutter XSlope (ft/ft)	=	0.000
Downstream Inlet number	=	7	Gutter depression (in)	=	0.00

MAIN SD1 10YR STM/10YR TW

Data File : D1E10T10.STM Return Period: 10 Yrs
Rainfall file: PHX1.RND I = 50.790/ (Tc + 9.250) ^ 0.830

LINE 10 STORM SEWER HYDRAULIC REPORT

Diameter (in) = 42 N = 0.012 Critical Depth (in) = 16.99
Length (ft) = 60 Kj (JLC) = 0.9 Downstream Line # = 9

	INVERT (ft)	DEPTH (in)	HGL (ft)	EGL (ft)	CROWN (ft)	NAT GND (ft)	AREA (ft^2)	VEL (ft/s)
UPSTREAM	1120.14	23.89	1122.13	1122.35	1123.64	1129.00	5.65	3.79
DNSTREAM	1120.00	25.29	1122.11	1122.30	1123.50	1129.10	6.05	3.53
SLOPE(%)	0.233		0.038	0.086		-0.167		

		CATCHMENT	CUMULATIVE		
Area (ac)	=	0.0	0.0		
Drainage Time (min)	=	0.00	7.57		
Intensity (in/h)	=	0.00	4.88	TOTAL	UNIFORM
Runoff Coefficient	=	0.00	0.00	FLOW	CAPACITY
Rational Flow (cfs)	=	0.00	0.00	(cfs)	(cfs)
Known Flow (cfs)	=	21.40	21.40	21.40	52.65

STORM SEWER INLET REPORT

FLOW RESULTS (cfs)
Flow from Catchment = 0.00
Carryover from previous inlet = 0.00
Total flow to current inlet = 0.00
Intercepted by current inlet = 0.00
Bypassed by current inlet = 0.00

PONDING WIDTH (ft) = 0.00
DEPTH AT CURB (ft) = 0.00
EFFICIENCY (%)
Curb = *
Grate = * Total = -inf
Slot = *

INPUT PARAMETERS:
Inlet Type = NONE IN SAG
Gutter Width (ft) = 0.000
Inlet n-value = 0.016
Downstream Inlet number = 8

Longitudinal Slope (ft/ft) = 0.000
Pavement Cross Slope (ft/ft) = 0.000
Normal Gutter XSlope (ft/ft) = 0.000
Gutter depression (in) = 0.00

MAIN SD1 10YR STM/10YR TW

Data File : D1E10T10.STM Return Period: 10 Yrs

Rainfall file: PHX1.RND I = 50.790/ (Tc + 9.250) ^ 0.830

LINE 11 STORM SEWER HYDRAULIC REPORT

Diameter (in) = 42 N = 0.012 Critical Depth (in) = 16.35

Length (ft) = 162 Kj (JLC) = 0.0 Downstream Line # = 10

	INVERT (ft)	DEPTH (in)	HGL (ft)	EGL (ft)	CROWN (ft)	NAT GND (ft)	AREA (ft^2)	VEL (ft/s)
UPSTREAM	1120.54	20.30	1122.23	1122.52	1124.04	1129.00	4.61	4.30
DNSTREAM	1120.15	23.85	1122.14	1122.33	1123.65	1129.00	5.64	3.51
SLOPE(%)	0.241		0.058	0.117		0.000		

		CATCHMENT	CUMULATIVE		
Area (ac)	=	0.0	0.0		
Drainage Time (min)	=	0.00	6.88		
Intensity (in/h)	=	0.00	5.05	TOTAL	UNIFORM
Runoff Coefficient	=	0.00	0.00	FLOW	CAPACITY
Rational Flow (cfs)	=	0.00	0.00	(cfs)	(cfs)
Known Flow (cfs)	=	19.80	19.80	19.80	53.48

STORM SEWER INLET REPORT

FLOW RESULTS (cfs)

Flow from Catchment	=	0.00
Carryover from previous inlet	=	0.00
Total flow to current inlet	=	0.00
Intercepted by current inlet	=	0.00
Bypassed by current inlet	=	0.00

PONDING WIDTH (ft) = 0.00

DEPTH AT CURB (ft) = 0.00

EFFICIENCY (%)

Curb = *

Grate = * Total = -inf

Slot = *

INPUT PARAMETERS:

Inlet Type	= NONE IN SAG	Longitudinal Slope (ft/ft)	= 0.000
Gutter Width (ft)	= 0.000	Pavement Cross Slope (ft/ft)	= 0.000
Inlet n-value	= 0.016	Normal Gutter XSlope (ft/ft)	= 0.000
Downstream Inlet number	= 10	Gutter depression (in)	= 0.00

MAIN SD1 10YR STM/10YR TW

Data File : D1E10T10.STM Return Period: 10 Yrs

Rainfall file: PHX1.RND I = 50.790/ (Tc + 9.250) ^ 0.830

LINE 12 STORM SEWER HYDRAULIC REPORT

Diameter (in) = 42 N = 0.012 Critical Depth (in) = 15.93

Length (ft) = 136 Kj (JLC) = 0.0 Downstream Line # = 11

	INVERT (ft)	DEPTH (in)	HGL (ft)	EGL (ft)	CROWN (ft)	NAT GND (ft)	AREA (ft^2)	VEL (ft/s)
UPSTREAM	1120.88	17.78	1122.36	1122.73	1124.38	1129.80	3.88	4.85
DNSTREAM	1120.55	20.28	1122.24	1122.50	1124.05	1129.00	4.60	4.09
SLOPE(%)	0.243		0.089	0.167		0.588		

		CATCHMENT	CUMULATIVE		
Area (ac)	=	0.0	0.0		
Drainage Time (min)	=	0.00	6.37		
Intensity (in/h)	=	0.00	5.19	TOTAL	UNIFORM
Runoff Coefficient	=	0.00	0.00	FLOW	CAPACITY
Rational Flow (cfs)	=	0.00	0.00	(cfs)	(cfs)
Known Flow (cfs)	=	18.80	18.80	18.80	53.69

STORM SEWER INLET REPORT

FLOW RESULTS (cfs)

Flow from Catchment	=	0.00	PONDING WIDTH (ft)	=	0.00	
Carryover from previous inlet	=	0.00	DEPTH AT CURB (ft)	=	0.00	
Total flow to current inlet	=	0.00	EFFICIENCY (%)			
Intercepted by current inlet	=	0.00	Curb =	*		
Bypassed by current inlet	=	0.00	Grate =	*	Total =	-inf
			Slot =	*		

INPUT PARAMETERS:

Inlet Type	= NONE IN SAG		Longitudinal Slope (ft/ft)	=	0.000
Gutter Width (ft)	=	0.000	Pavement Cross Slope (ft/ft)	=	0.000
Inlet n-value	=	0.016	Normal Gutter XSlope (ft/ft)	=	0.000
Downstream Inlet number	=	9	Gutter depression (in)	=	0.00

MAIN SD1 10YR STM/10YR TW

Data File : D1E10T10.STM Return Period: 10 Yrs

Rainfall file: PHX1.RND I = 50.790/ (Tc + 9.250) ^ 0.830

LINE 13 STORM SEWER HYDRAULIC REPORT

Diameter (in) = 30 N = 0.012 Critical Depth (in) = 14.06

Length (ft) = 112 Kj (JLC) = 0.0 Downstream Line # = 12

	INVERT (ft)	DEPTH (in)	HGL (ft)	EGL (ft)	CROWN (ft)	NAT GND (ft)	AREA (ft^2)	VEL (ft/s)
UPSTREAM	1121.16	16.61	1122.54	1122.85	1123.66	1130.10	2.79	4.41
DNSTREAM	1120.89	17.79	1122.37	1122.63	1123.39	1129.80	3.03	4.06
SLOPE(%)	0.241		0.153	0.195		0.268		

		CATCHMENT	CUMULATIVE		
Area (ac)	=	0.0	0.0		
Drainage Time (min)	=	0.00	5.93		
Intensity (in/h)	=	0.00	5.31	TOTAL	UNIFORM
Runoff Coefficient	=	0.00	0.00	FLOW	CAPACITY
Rational Flow (cfs)	=	0.00	0.00	(cfs)	(cfs)
Known Flow (cfs)	=	12.30	12.30	12.30	21.82

STORM SEWER INLET REPORT

FLOW RESULTS (cfs)

Flow from Catchment	=	0.00
Carryover from previous inlet	=	0.00
Total flow to current inlet	=	0.00
Intercepted by current inlet	=	0.00
Bypassed by current inlet	=	0.00

PONDING WIDTH (ft) = 0.00

DEPTH AT CURB (ft) = 0.00

EFFICIENCY (%)

Curb = *

Grate = * Total = -inf

Slot = *

INPUT PARAMETERS:

Inlet Type	= NONE IN SAG	Longitudinal Slope (ft/ft)	= 0.000
Gutter Width (ft)	= 0.000	Pavement Cross Slope (ft/ft)	= 0.000
Inlet n-value	= 0.016	Normal Gutter XSlope (ft/ft)	= 0.000
Downstream Inlet number	= 10	Gutter depression (in)	= 0.00

MAIN SD1 10YR STM/10YR TW

Data File : D1E10T10.STM Return Period: 10 Yrs
Rainfall file: PHX1.RND I = 50.790/ (Tc + 9.250) ^ 0.830

LINE 14 STORM SEWER HYDRAULIC REPORT

Diameter (in) = 30 N = 0.012 Critical Depth (in) = 13.60
Length (ft) = 346 Kj (JLC) = 0.0 Downstream Line # = 13

	INVERT (ft)	DEPTH (in)	HGL (ft)	EGL (ft)	CROWN (ft)	NAT GND (ft)	AREA (ft^2)	VEL (ft/s)
UPSTREAM	1122.03	14.94	1123.28	1123.62	1124.53	1129.02	2.44	4.71
DNSTREAM	1121.17	16.60	1122.55	1122.82	1123.67	1130.10	2.79	4.13
SLOPE(%)	0.249		0.209	0.232		-0.312		

		CATCHMENT	CUMULATIVE		
Area (ac)	=	0.0	0.0		
Drainage Time (min)	=	0.00	4.62		
Intensity (in/h)	=	0.00	5.72	TOTAL	UNIFORM
Runoff Coefficient	=	0.00	0.00	FLOW	CAPACITY
Rational Flow (cfs)	=	0.00	0.00	(cfs)	(cfs)
Known Flow (cfs)	=	11.50	11.50	11.50	22.15

STORM SEWER INLET REPORT

FLOW RESULTS (cfs)
Flow from Catchment = 0.00
Carryover from previous inlet = 0.00
Total flow to current inlet = 0.00
Intercepted by current inlet = 0.00
Bypassed by current inlet = 0.00

PONDING WIDTH (ft) = 0.00
DEPTH AT CURB (ft) = 0.00
EFFICIENCY (%)
Curb = *
Grate = * Total = -inf
Slot = *

INPUT PARAMETERS:
Inlet Type = NONE IN SAG
Gutter Width (ft) = 0.000
Inlet n-value = 0.016
Downstream Inlet number = 11
Longitudinal Slope (ft/ft) = 0.000
Pavement Cross Slope (ft/ft) = 0.000
Normal Gutter XSlope (ft/ft) = 0.000
Gutter depression (in) = 0.00

MAIN SD1 10YR STM/10YR TW

Data File : D1E10T10.STM Return Period: 10 Yrs

Rainfall file: PHX1.RND I = 50.790/ (Tc + 9.250) ^ 0.830

LINE 15 STORM SEWER HYDRAULIC REPORT

Diameter (in) = 30 N = 0.012 Critical Depth (in) = 12.93

Length (ft) = 280 Kj (JLC) = 0.0 Downstream Line # = 14

	INVERT (ft)	DEPTH (in)	HGL (ft)	EGL (ft)	CROWN (ft)	NAT GND (ft)	AREA (ft^2)	VEL (ft/s)
UPSTREAM	1122.73	14.27	1123.92	1124.24	1125.23	1128.35	2.30	4.52
DNSTREAM	1122.04	14.99	1123.29	1123.57	1124.54	1129.02	2.45	4.24
SLOPE(%)	0.246		0.225	0.238		-0.239		

		CATCHMENT	CUMULATIVE	TOTAL FLOW (cfs)	UNIFORM CAPACITY (cfs)
Area (ac)	=	0.0	0.0		
Drainage Time (min)	=	0.00	3.56		
Intensity (in/h)	=	0.00	6.12		
Runoff Coefficient	=	0.00	0.00		
Rational Flow (cfs)	=	0.00	0.00		
Known Flow (cfs)	=	10.40	10.40	10.40	22.05

STORM SEWER INLET REPORT

FLOW RESULTS (cfs)

Flow from Catchment	=	0.00	PONDING WIDTH (ft)	= 0.00
Carryover from previous inlet	=	0.00	DEPTH AT CURB (ft)	= 0.00
Total flow to current inlet	=	0.00	EFFICIENCY (%)	
Intercepted by current inlet	=	0.00	Curb = *	
Bypassed by current inlet	=	0.00	Grate = *	Total = -inf
			Slot = *	

INPUT PARAMETERS:

Inlet Type	= NONE IN SAG	Longitudinal Slope (ft/ft)	= 0.000
Gutter Width (ft)	= 0.000	Pavement Cross Slope (ft/ft)	= 0.000
Inlet n-value	= 0.016	Normal Gutter XSlope (ft/ft)	= 0.000
Downstream Inlet number	= 12	Gutter depression (in)	= 0.00

MAIN SD1 10YR STM/10YR TW

Data File : D1E10T10.STM Return Period: 10 Yrs
Rainfall file: PHX1.RND I = 50.790/ (Tc + 9.250) ^ 0.830

LINE 16 STORM SEWER HYDRAULIC REPORT

Diameter (in) = 24 N = 0.012 Critical Depth (in) = 11.16
Length (ft) = 239 Kj (JLC) = 0.0 Downstream Line # = 15

	INVERT (ft)	DEPTH (in)	HGL (ft)	EGL (ft)	CROWN (ft)	NAT GND (ft)	AREA (ft^2)	VEL (ft/s)
UPSTREAM	1123.35	12.48	1124.39	1124.66	1125.35	1128.71	1.65	4.18
DNSTREAM	1122.74	14.31	1123.93	1124.13	1124.74	1128.35	1.95	3.53
SLOPE(%)	0.255		0.192	0.224		0.151		

		CATCHMENT	CUMULATIVE		
Area (ac)	=	0.0	0.0		
Drainage Time (min)	=	0.00	2.52		
Intensity (in/h)	=	0.00	6.56	TOTAL	UNIFORM
Runoff Coefficient	=	0.00	0.00	FLOW	CAPACITY
Rational Flow (cfs)	=	0.00	0.00	(cfs)	(cfs)
Known Flow (cfs)	=	6.90	6.90	6.90	12.38

STORM SEWER INLET REPORT

FLOW RESULTS (cfs)
Flow from Catchment = 0.00
Carryover from previous inlet = 0.00
Total flow to current inlet = 0.00
Intercepted by current inlet = 0.00
Bypassed by current inlet = 0.00

PONDING WIDTH (ft) = 0.00
DEPTH AT CURB (ft) = 0.00
EFFICIENCY (%)
Curb = *
Grate = * Total = -inf
Slot = *

INPUT PARAMETERS:
Inlet Type = NONE IN SAG
Gutter Width (ft) = 0.000
Inlet n-value = 0.016
Downstream Inlet number = 13

Longitudinal Slope (ft/ft) = 0.000
Pavement Cross Slope (ft/ft) = 0.000
Normal Gutter XSlope (ft/ft) = 0.000
Gutter depression (in) = 0.00

MAIN SD1 10YR STM/10YR TW

Data File : D1E10T10.STM Return Period: 10 Yrs

Rainfall file: PHX1.RND I = 50.790/ (Tc + 9.250) ^ 0.830

LINE 17 STORM SEWER HYDRAULIC REPORT

Diameter (in) = 24 N = 0.024 Critical Depth (in) = 9.69

Length (ft) = 32 Kj (JLC) = 1.4 Downstream Line # = 16

	INVERT (ft)	DEPTH (in)	HGL (ft)	EGL (ft)	CROWN (ft)	NAT GND (ft)	AREA (ft^2)	VEL (ft/s)
UPSTREAM	1123.49	16.41	1124.86	1124.94	1125.49	1128.71	2.29	2.27
DNSTREAM	1123.39	16.69	1124.78	1124.86	1125.39	1128.71	2.33	2.23
SLOPE(%)	0.312		0.240	0.249		0.000		

		CATCHMENT	CUMULATIVE		
Area (ac)	=	0.0	0.0		
Drainage Time (min)	=	0.00	2.29		
Intensity (in/h)	=	0.00	6.67	TOTAL	UNIFORM
Runoff Coefficient	=	0.00	0.00	FLOW	CAPACITY
Rational Flow (cfs)	=	0.00	0.00	(cfs)	(cfs)
Known Flow (cfs)	=	5.20	5.20	5.20	6.85

STORM SEWER INLET REPORT

FLOW RESULTS (cfs)

Flow from Catchment	=	0.00	PONDING WIDTH (ft)	=	0.00
Carryover from previous inlet	=	0.00	DEPTH AT CURB (ft)	=	0.00
Total flow to current inlet	=	0.00	EFFICIENCY (%)		
Intercepted by current inlet	=	0.00	Curb = *		
Bypassed by current inlet	=	0.00	Grate = *	Total =	-inf
			Slot = *		

INPUT PARAMETERS:

Inlet Type	= NONE IN SAG		Longitudinal Slope (ft/ft)	=	0.000
Gutter Width (ft)	=	0.000	Pavement Cross Slope (ft/ft)	=	0.000
Inlet n-value	=	0.016	Normal Gutter XSlope (ft/ft)	=	0.000
Downstream Inlet number	=	14	Gutter depression (in)	=	0.00

MAIN SD1 10YR STM/10YR TW

Data File : D1E10T10.STM Return Period: 10 Yrs

Rainfall file: PHX1.RND I = 50.790/ (Tc + 9.250) ^ 0.830

LINE 18 STORM SEWER HYDRAULIC REPORT

Diameter (in) = 24 N = 0.012 Critical Depth (in) = 6.85

Length (ft) = 118 Kj (JLC) = 0.4 Downstream Line # = 17

	INVERT (ft)	DEPTH (in)	HGL (ft)	EGL (ft)	CROWN (ft)	NAT GND (ft)	AREA (ft^2)	VEL (ft/s)
UPSTREAM	1123.92	11.84	1124.91	1124.95	1125.92	1126.52	1.54	1.68
DNSTREAM	1123.49	16.84	1124.89	1124.91	1125.49	1128.71	2.36	1.10
SLOPE(%)	0.364		0.011	0.032		-1.856		

		CATCHMENT	CUMULATIVE		
Area (ac)	=	0.0	0.0		
Drainage Time (min)	=	0.00	0.88		
Intensity (in/h)	=	0.00	7.43	TOTAL	UNIFORM
Runoff Coefficient	=	0.00	0.00	FLOW	CAPACITY
Rational Flow (cfs)	=	0.00	0.00	(cfs)	(cfs)
Known Flow (cfs)	=	2.60	2.60	2.60	14.79

STORM SEWER INLET REPORT

FLOW RESULTS (cfs)

Flow from Catchment	=	0.00	PONDING WIDTH (ft)	=	0.00
Carryover from previous inlet	=	0.00	DEPTH AT CURB (ft)	=	0.00
Total flow to current inlet	=	0.00	EFFICIENCY (%)		
Intercepted by current inlet	=	0.00	Curb = *		
Bypassed by current inlet	=	0.00	Grate = *	Total =	-inf
			Slot = *		

INPUT PARAMETERS:

Inlet Type	= NONE IN SAG		Longitudinal Slope (ft/ft)	=	0.000
Gutter Width (ft)	=	0.000	Pavement Cross Slope (ft/ft)	=	0.000
Inlet n-value	=	0.016	Normal Gutter XSlope (ft/ft)	=	0.000
Downstream Inlet number	=	15	Gutter depression (in)	=	0.00

MAIN SD1 10YR STM/10YR TW

Data File : D1E10T10.STM Return Period: 10 Yrs

Rainfall file: PHX1.RND I = 50.790/ (Tc + 9.250) ^ 0.830

LINE 19 STORM SEWER HYDRAULIC REPORT

Diameter (in) = 24 N = 0.012 Critical Depth (in) = 3.80

Length (ft) = 29 Kj (JLC) = 0.0 Downstream Line # = 18

	INVERT (ft)	DEPTH (in)	HGL (ft)	EGL (ft)	CROWN (ft)	NAT GND (ft)	AREA (ft^2)	VEL (ft/s)
UPSTREAM	1124.01	10.78	1124.91	1124.91	1126.01	1126.52	1.37	0.59
DNSTREAM	1123.92	11.86	1124.91	1124.91	1125.92	1126.52	1.55	0.52
SLOPE(%)	0.310		-0.001	0.003		0.000		

		CATCHMENT	CUMULATIVE	TOTAL FLOW (cfs)	UNIFORM CAPACITY (cfs)
Area (ac)	=	0.0	0.0		
Drainage Time (min)	=	0.00	0.00		
Intensity (in/h)	=	0.00	8.01		
Runoff Coefficient	=	0.00	0.00		
Rational Flow (cfs)	=	0.00	0.00		
Known Flow (cfs)	=	0.80	0.80	0.80	13.65

STORM SEWER INLET REPORT

FLOW RESULTS (cfs)

Flow from Catchment	=	0.00
Carryover from previous inlet	=	0.00
Total flow to current inlet	=	0.00
Intercepted by current inlet	=	0.00
Bypassed by current inlet	=	0.00

PONDING WIDTH (ft) = 0.00

DEPTH AT CURB (ft) = 0.00

EFFICIENCY (%)

Curb = *

Grate = * Total = -inf

Slot = *

INPUT PARAMETERS:

Inlet Type	= NONE IN SAG	Longitudinal Slope (ft/ft)	= 0.000
Gutter Width (ft)	= 0.000	Pavement Cross Slope (ft/ft)	= 0.000
Inlet n-value	= 0.016	Normal Gutter XSlope (ft/ft)	= 0.000
Downstream Inlet number	= 16	Gutter depression (in)	= 0.00

MAIN SD1 10YR STM/10YR TW

Data File : D1E10T10.STM Return Period: 10 Yrs

Rainfall file: PHX1.RND I = 50.790/ (Tc + 9.250) ^ 0.830

LINE 20 STORM SEWER HYDRAULIC REPORT

Diameter (in) = 24 N = 0.024 Critical Depth (in) = 3.80

Length (ft) = 0 Kj (JLC) = 1.0 Downstream Line # = 19

	INVERT (ft)	DEPTH (in)	HGL (ft)	EGL (ft)	CROWN (ft)	NAT GND (ft)	AREA (ft^2)	VEL (ft/s)
UPSTREAM	1124.02	10.78	1124.92	1124.93	1126.02	1126.52	1.37	0.59
DNSTREAM	1124.02	10.72	1124.91	1124.92	1126.02	1126.52	1.36	0.59
SLOPE(%)	0.000		100.098	99.401		0.000		

		CATCHMENT	CUMULATIVE	TOTAL FLOW (cfs)	UNIFORM CAPACITY (cfs)
Area (ac)	=	0.0	0.0		
Drainage Time (min)	=	0.00	0.00		
Intensity (in/h)	=	0.00	8.01		
Runoff Coefficient	=	0.00	0.00		
Rational Flow (cfs)	=	0.00	0.00		
Known Flow (cfs)	=	0.80	0.80	0.80	0.00

STORM SEWER INLET REPORT

FLOW RESULTS (cfs)

Flow from Catchment	=	0.00	PONDING WIDTH (ft)	=	0.00
Carryover from previous inlet	=	0.00	DEPTH AT CURB (ft)	=	0.00
Total flow to current inlet	=	0.00	EFFICIENCY (%)		
Intercepted by current inlet	=	0.00	Curb = *		
Bypassed by current inlet	=	0.00	Grate = *	Total =	-inf
			Slot = *		

INPUT PARAMETERS:

Inlet Type	= NONE IN SAG		Longitudinal Slope (ft/ft)	=	0.000
Gutter Width (ft)	=	0.000	Pavement Cross Slope (ft/ft)	=	0.000
Inlet n-value	=	0.016	Normal Gutter XSlope (ft/ft)	=	0.000
Downstream Inlet number	=	19	Gutter depression (in)	=	0.00

MAIN SD1 10YR STM/10YR TW

Data File : D1E10T10.STM Return Period: 10 Yrs

Rainfall file: PHX1.RND I = 50.790/ (Tc + 9.250) ^ 0.830

LINE 21 STORM SEWER HYDRAULIC REPORT

Diameter (in) = 24 N = 0.024 Critical Depth (in) = 10.70

Length (ft) = 64 Kj (JLC) = 1.3 Downstream Line # = 2

	INVERT (ft)	DEPTH (in)	HGL (ft)	EGL (ft)	CROWN (ft)	NAT GND (ft)	AREA (ft^2)	VEL (ft/s)
UPSTREAM	1136.76	10.70	1137.65	1137.99	1138.76	1142.26	1.35	4.68
DNSTREAM	1115.50	24.00	1121.02	1121.08	1117.50	1123.20	3.14	2.02
SLOPE(%)	35.219		25.989	26.422		29.781		

		CATCHMENT	CUMULATIVE		
Area (ac)	=	0.0	0.0		
Drainage Time (min)	=	0.00	0.30		
Intensity (in/h)	=	0.00	7.80	TOTAL	UNIFORM
Runoff Coefficient	=	0.00	0.00	FLOW	CAPACITY
Rational Flow (cfs)	=	0.00	0.00	(cfs)	(cfs)
Known Flow (cfs)	=	6.34	6.34	6.34	72.71

Note: Transitional flow exists in this line

STORM SEWER INLET REPORT

FLOW RESULTS (cfs)

Flow from Catchment	=	0.00	PONDING WIDTH (ft)	=	0.00
Carryover from previous inlet	=	0.00	DEPTH AT CURB (ft)	=	0.00
Total flow to current inlet	=	0.00	EFFICIENCY (%)		
Intercepted by current inlet	=	0.00	Curb = *		
Bypassed by current inlet	=	0.00	Grate = *	Total =	-inf
			Slot = *		

INPUT PARAMETERS:

Inlet Type	= NONE IN SAG		Longitudinal Slope (ft/ft)	=	0.000
Gutter Width (ft)	=	0.000	Pavement Cross Slope (ft/ft)	=	0.000
Inlet n-value	=	0.016	Normal Gutter XSlope (ft/ft)	=	0.000
Downstream Inlet number	=	20	Gutter depression (in)	=	0.00

MAIN SD1 10YR STM/10YR TW

Data File : D1E10T10.STM Return Period: 10 Yrs

Rainfall file: PHX1.RND I = 50.790/ (Tc + 9.250) ^ 0.830

LINE 22 STORM SEWER HYDRAULIC REPORT

Diameter (in) = 24 N = 0.012 Critical Depth (in) = 7.68

Length (ft) = 59 Kj (JLC) = 0.0 Downstream Line # = 21

	INVERT (ft)	DEPTH (in)	HGL (ft)	EGL (ft)	CROWN (ft)	NAT GND (ft)	AREA (ft^2)	VEL (ft/s)
UPSTREAM	1137.42	7.68	1138.07	1138.29	1139.42	1142.92	0.87	3.77
DNSTREAM	1136.86	9.66	1137.67	1137.78	1138.86	1142.26	1.18	2.76
SLOPE(%)	0.949		0.685	0.858		1.119		

		CATCHMENT	CUMULATIVE		
Area (ac)	=	0.0	0.0		
Drainage Time (min)	=	0.00	0.00		
Intensity (in/h)	=	0.00	8.01	TOTAL	UNIFORM
Runoff Coefficient	=	0.00	0.00	FLOW	CAPACITY
Rational Flow (cfs)	=	0.00	0.00	(cfs)	(cfs)
Known Flow (cfs)	=	3.27	3.27	3.27	23.87

STORM SEWER INLET REPORT

FLOW RESULTS (cfs)

Flow from Catchment	=	0.00	PONDING WIDTH (ft)	=	0.00
Carryover from previous inlet	=	0.00	DEPTH AT CURB (ft)	=	0.00
Total flow to current inlet	=	0.00	EFFICIENCY (%)		
Intercepted by current inlet	=	0.00	Curb = *		
Bypassed by current inlet	=	0.00	Grate = *	Total =	-inf
			Slot = *		

INPUT PARAMETERS:

Inlet Type	=	NONE IN SAG	Longitudinal Slope (ft/ft)	=	0.000
Gutter Width (ft)	=	0.000	Pavement Cross Slope (ft/ft)	=	0.000
Inlet n-value	=	0.016	Normal Gutter XSlope (ft/ft)	=	0.000
Downstream Inlet number	=	21	Gutter depression (in)	=	0.00

MAIN SDI 10YR STM/10YR TW

Data File : D1E10T10.STM Return Period: 10 Yrs

Rainfall file: PHX1.RND I = 50.790/ (Tc + 9.250) ^ 0.830

LINE 23 STORM SEWER HYDRAULIC REPORT

Diameter (in) = 24 N = 0.024 Critical Depth (in) = 10.59

Length (ft) = 40 Kj (JLC) = 1.3 Downstream Line # = 3

	INVERT (ft)	DEPTH (in)	HGL (ft)	EGL (ft)	CROWN (ft)	NAT GND (ft)	AREA (ft^2)	VEL (ft/s)
UPSTREAM	1133.03	10.59	1133.91	1134.25	1135.03	1138.53	1.34	4.65
DNSTREAM	1116.67	24.00	1121.13	1121.19	1118.67	1124.15	3.14	1.98
SLOPE(%)	44.820		31.959	32.646		35.950		

		CATCHMENT	CUMULATIVE		
Area (ac)	=	0.0	0.0		
Drainage Time (min)	=	0.00	0.31		
Intensity (in/h)	=	0.00	7.80	TOTAL	UNIFORM
Runoff Coefficient	=	0.00	0.00	FLOW	CAPACITY
Rational Flow (cfs)	=	0.00	0.00	(cfs)	(cfs)
Known Flow (cfs)	=	6.21	6.21	6.21	82.02

Note: Transitional flow exists in this line

STORM SEWER INLET REPORT

FLOW RESULTS (cfs)

Flow from Catchment	=	0.00	PONDING WIDTH (ft)	=	0.00
Carryover from previous inlet	=	0.00	DEPTH AT CURB (ft)	=	0.00
Total flow to current inlet	=	0.00	EFFICIENCY (%)		
Intercepted by current inlet	=	0.00	Curb = *		
Bypassed by current inlet	=	0.00	Grate = *	Total =	-inf
			Slot = *		

INPUT PARAMETERS:

Inlet Type	= NONE IN SAG		Longitudinal Slope (ft/ft)	=	0.000
Gutter Width (ft)	=	0.000	Pavement Cross Slope (ft/ft)	=	0.000
Inlet n-value	=	0.016	Normal Gutter XSlope (ft/ft)	=	0.000
Downstream Inlet number	=	22	Gutter depression (in)	=	0.00

MAIN SD1 10YR STM/10YR TW

Data File : D1E10T10.STM Return Period: 10 Yrs

Rainfall file: PHX1.RND I = 50.790/ (Tc + 9.250) ^ 0.830

LINE 24 STORM SEWER HYDRAULIC REPORT

Diameter (in) = 24 N = 0.012 Critical Depth (in) = 7.54

Length (ft) = 59 Kj (JLC) = 0.0 Downstream Line # = 23

	INVERT (ft)	DEPTH (in)	HGL (ft)	EGL (ft)	CROWN (ft)	NAT GND (ft)	AREA (ft^2)	VEL (ft/s)
UPSTREAM	1133.74	7.54	1134.38	1134.59	1135.74	1139.24	0.85	3.73
DNSTREAM	1133.13	9.55	1133.93	1134.04	1135.13	1138.53	1.17	2.70
SLOPE(%)	1.034		0.765	0.938		1.203		

		CATCHMENT	CUMULATIVE		
Area (ac)	=	0.0	0.0		
Drainage Time (min)	=	0.00	0.00		
Intensity (in/h)	=	0.00	8.01	TOTAL	UNIFORM
Runoff Coefficient	=	0.00	0.00	FLOW	CAPACITY
Rational Flow (cfs)	=	0.00	0.00	(cfs)	(cfs)
Known Flow (cfs)	=	3.15	3.15	3.15	24.91

STORM SEWER INLET REPORT

FLOW RESULTS (cfs)

Flow from Catchment	=	0.00	PONDING WIDTH (ft)	=	0.00
Carryover from previous inlet	=	0.00	DEPTH AT CURB (ft)	=	0.00
Total flow to current inlet	=	0.00	EFFICIENCY (%)		
Intercepted by current inlet	=	0.00	Curb = *		
Bypassed by current inlet	=	0.00	Grate = *	Total =	-inf
			Slot = *		

INPUT PARAMETERS:

Inlet Type	= NONE IN SAG		Longitudinal Slope (ft/ft)	=	0.000
Gutter Width (ft)	=	0.000	Pavement Cross Slope (ft/ft)	=	0.000
Inlet n-value	=	0.016	Normal Gutter XSlope (ft/ft)	=	0.000
Downstream Inlet number	=	23	Gutter depression (in)	=	0.00

MAIN SD1 10YR STM/10YR TW

Data File : D1E10T10.STM Return Period: 10 Yrs

Rainfall file: PHX1.RND I = 50.790/ (Tc + 9.250) ^ 0.830

LINE 25 STORM SEWER HYDRAULIC REPORT

Diameter (in) = 24 N = 0.024 Critical Depth (in) = 5.42

Length (ft) = 39 Kj (JLC) = 1.3 Downstream Line # = 4

	INVERT (ft)	DEPTH (in)	HGL (ft)	EGL (ft)	CROWN (ft)	NAT GND (ft)	AREA (ft^2)	VEL (ft/s)
UPSTREAM	1130.95	5.42	1131.59	1131.74	1132.95	1136.45	0.53	3.06
DNSTREAM	1117.45	24.00	1121.17	1121.18	1119.45	1125.40	3.14	0.52
SLOPE(%)	36.896		26.716	27.079		28.333		

	CATCHMENT	CUMULATIVE	TOTAL FLOW (cfs)	UNIFORM CAPACITY (cfs)
Area (ac) =	0.0	0.0		
Drainage Time (min) =	0.00	0.00		
Intensity (in/h) =	0.00	8.01		
Runoff Coefficient =	0.00	0.00		
Rational Flow (cfs) =	0.00	0.00		
Known Flow (cfs) =	1.63	1.63	1.63	74.42

Note: Transitional flow exists in this line

STORM SEWER INLET REPORT

FLOW RESULTS (cfs)

Flow from Catchment = 0.00

Carryover from previous inlet = 0.00

Total flow to current inlet = 0.00

Intercepted by current inlet = 0.00

Bypassed by current inlet = 0.00

PONDING WIDTH (ft) = 0.00

DEPTH AT CURB (ft) = 0.00

EFFICIENCY (%)

Curb = *

Grate = * Total = -inf

Slot = *

INPUT PARAMETERS:

Inlet Type = NONE IN SAG

Gutter Width (ft) = 0.000

Inlet n-value = 0.016

Downstream Inlet number = 24

Longitudinal Slope (ft/ft) = 0.000

Pavement Cross Slope (ft/ft) = 0.000

Normal Gutter XSlope (ft/ft) = 0.000

Gutter depression (in) = 0.00

MAIN SD1 10YR STM/10YR TW

Data File : D1E10T10.STM Return Period: 10 Yrs

Rainfall file: PHX1.RND I = 50.790/ (Tc + 9.250) ^ 0.830

LINE 26 STORM SEWER HYDRAULIC REPORT

Diameter (in) = 24 N = 0.024 Critical Depth (in) = 8.01

Length (ft) = 29 Kj (JLC) = 1.3 Downstream Line # = 5

	INVERT (ft)	DEPTH (in)	HGL (ft)	EGL (ft)	CROWN (ft)	NAT GND (ft)	AREA (ft^2)	VEL (ft/s)
UPSTREAM	1125.76	8.01	1126.43	1126.66	1127.76	1136.38	0.92	3.87
DNSTREAM	1117.70	24.00	1121.22	1121.23	1119.70	1125.45	3.14	1.13
SLOPE(%)	28.933		17.973	18.706		37.690		

	CATCHMENT	CUMULATIVE	TOTAL FLOW (cfs)	UNIFORM CAPACITY (cfs)
Area (ac) =	0.0	0.0		
Drainage Time (min) =	0.00	0.83		
Intensity (in/h) =	0.00	7.46		
Runoff Coefficient =	0.00	0.00		
Rational Flow (cfs) =	0.00	0.00		
Known Flow (cfs) =	3.55	3.55	3.55	65.90

Note: Transitional flow exists in this line

STORM SEWER INLET REPORT

FLOW RESULTS (cfs)

Flow from Catchment = 0.00

Carryover from previous inlet = 0.00

Total flow to current inlet = 0.00

Intercepted by current inlet = 0.00

Bypassed by current inlet = 0.00

PONDING WIDTH (ft) = 0.00

DEPTH AT CURB (ft) = 0.00

EFFICIENCY (%)

Curb = *

Grate = * Total = -inf

Slot = *

INPUT PARAMETERS:

Inlet Type = NONE IN SAG

Gutter Width (ft) = 0.000

Inlet n-value = 0.016

Downstream Inlet number = 24

Longitudinal Slope (ft/ft) = 0.000

Pavement Cross Slope (ft/ft) = 0.000

Normal Gutter XSlope (ft/ft) = 0.000

Gutter depression (in) = 0.00

MAIN SD1 10YR STM/10YR TW

Data File : D1E10T10.STM Return Period: 10 Yrs

Rainfall file: PHX1.RND I = 50.790/ (Tc + 9.250) ^ 0.830

LINE 27 STORM SEWER HYDRAULIC REPORT

Diameter (in) = 24 N = 0.024 Critical Depth (in) = 8.01

Length (ft) = 139 Kj (JLC) = 0.0 Downstream Line # = 26

	INVERT (ft)	DEPTH (in)	HGL (ft)	EGL (ft)	CROWN (ft)	NAT GND (ft)	AREA (ft^2)	VEL (ft/s)
UPSTREAM	1126.46	14.74	1127.69	1127.74	1128.46	1131.96	2.02	1.75
DNSTREAM	1125.76	8.12	1126.44	1126.66	1127.76	1136.38	0.94	3.80
SLOPE(%)	0.504		0.902	0.776		-3.180		

		CATCHMENT	CUMULATIVE		
Area (ac)	=	0.0	0.0		
Drainage Time (min)	=	0.00	0.00		
Intensity (in/h)	=	0.00	8.01	TOTAL	UNIFORM
Runoff Coefficient	=	0.00	0.00	FLOW	CAPACITY
Rational Flow (cfs)	=	0.00	0.00	(cfs)	(cfs)
Known Flow (cfs)	=	3.55	3.55	3.55	8.69

STORM SEWER INLET REPORT

FLOW RESULTS (cfs)

Flow from Catchment	=	0.00	PONDING WIDTH (ft)	=	0.00
Carryover from previous inlet	=	0.00	DEPTH AT CURB (ft)	=	0.00
Total flow to current inlet	=	0.00	EFFICIENCY (%)		
Intercepted by current inlet	=	0.00	Curb = *		
Bypassed by current inlet	=	0.00	Grate = *	Total =	-inf
			Slot = *		

INPUT PARAMETERS:

Inlet Type	= NONE IN SAG		Longitudinal Slope (ft/ft)	=	0.000
Gutter Width (ft)	=	0.000	Pavement Cross Slope (ft/ft)	=	0.000
Inlet n-value	=	0.016	Normal Gutter XSlope (ft/ft)	=	0.000
Downstream Inlet number	=	25	Gutter depression (in)	=	0.00

MAIN SD1 10YR STM/10YR TW

Data File : D1E10T10.STM Return Period: 10 Yrs

Rainfall file: PHX1.RND I = 50.790/ (Tc + 9.250) ^ 0.830

LINE 28 STORM SEWER HYDRAULIC REPORT

Diameter (in) = 24 N = 0.012 Critical Depth (in) = 15.33

Length (ft) = 97 Kj (JLC) = 1.3 Downstream Line # = 7

	INVERT (ft)	DEPTH (in)	HGL (ft)	EGL (ft)	CROWN (ft)	NAT GND (ft)	AREA (ft^2)	VEL (ft/s)
UPSTREAM	1120.73	15.33	1122.01	1122.59	1122.73	1129.55	2.12	6.14
DNSTREAM	1118.14	24.00	1121.31	1121.58	1120.14	1128.00	3.14	4.14
SLOPE(%)	2.671		0.718	1.048		1.598		

		CATCHMENT	CUMULATIVE	TOTAL FLOW (cfs)	UNIFORM CAPACITY (cfs)
Area (ac)	=	0.0	0.0		
Drainage Time (min)	=	0.00	0.39		
Intensity (in/h)	=	0.00	7.74		
Runoff Coefficient	=	0.00	0.00		
Rational Flow (cfs)	=	0.00	0.00		
Known Flow (cfs)	=	13.01	13.01	13.01	40.05

Note: Transitional flow exists in this line

STORM SEWER INLET REPORT

FLOW RESULTS (cfs)

Flow from Catchment	=	0.00	PONDING WIDTH (ft)	=	0.00
Carryover from previous inlet	=	0.00	DEPTH AT CURB (ft)	=	0.00
Total flow to current inlet	=	0.00	EFFICIENCY (%)		
Intercepted by current inlet	=	0.00	Curb = *		
Bypassed by current inlet	=	0.00	Grate = *	Total =	-inf
			Slot = *		

INPUT PARAMETERS:

Inlet Type	= NONE IN SAG		Longitudinal Slope (ft/ft)	=	0.000
Gutter Width (ft)	=	0.000	Pavement Cross Slope (ft/ft)	=	0.000
Inlet n-value	=	0.016	Normal Gutter XSlope (ft/ft)	=	0.000
Downstream Inlet number	=	26	Gutter depression (in)	=	0.00

MAIN SD1 10YR STM/10YR TW

Data File : D1E10T10.STM Return Period: 10 Yrs

Rainfall file: PHX1.RND I = 50.790/ (Tc + 9.250) ^ 0.830

LINE 29 STORM SEWER HYDRAULIC REPORT

Diameter (in) = 24 N = 0.012 Critical Depth (in) = 10.92

Length (ft) = 95 Kj (JLC) = 0.0 Downstream Line # = 28

	INVERT (ft)	DEPTH (in)	HGL (ft)	EGL (ft)	CROWN (ft)	NAT GND (ft)	AREA (ft²)	VEL (ft/s)
UPSTREAM	1121.30	10.92	1122.22	1122.57	1123.30	1126.80	1.39	4.75
DNSTREAM	1120.83	14.41	1122.03	1122.20	1122.83	1129.55	1.97	3.35
SLOPE(%)	0.495		0.203	0.388		-2.895		

		CATCHMENT	CUMULATIVE	TOTAL FLOW (cfs)	UNIFORM CAPACITY (cfs)
Area (ac)	=	0.0	0.0		
Drainage Time (min)	=	0.00	0.00		
Intensity (in/h)	=	0.00	8.01		
Runoff Coefficient	=	0.00	0.00		
Rational Flow (cfs)	=	0.00	0.00		
Known Flow (cfs)	=	6.60	6.60	6.60	17.24

STORM SEWER INLET REPORT

FLOW RESULTS (cfs)

Flow from Catchment	=	0.00	PONDING WIDTH (ft)	=	0.00
Carryover from previous inlet	=	0.00	DEPTH AT CURB (ft)	=	0.00
Total flow to current inlet	=	0.00	EFFICIENCY (%)		
Intercepted by current inlet	=	0.00	Curb = *		
Bypassed by current inlet	=	0.00	Grate = *	Total =	-inf
			Slot = *		

INPUT PARAMETERS:

Inlet Type	=	NONE IN SAG	Longitudinal Slope (ft/ft)	=	0.000
Gutter Width (ft)	=	0.000	Pavement Cross Slope (ft/ft)	=	0.000
Inlet n-value	=	0.016	Normal Gutter XSlope (ft/ft)	=	0.000
Downstream Inlet number	=	27	Gutter depression (in)	=	0.00

MAIN SD1 10YR STM/10YR TW

Data File : D1E10T10.STM Return Period: 10 Yrs
Rainfall file: PHX1.RND I = 50.790/ (Tc + 9.250) ^ 0.830

LINE 30 STORM SEWER HYDRAULIC REPORT

Diameter (in) = 24 N = 0.012 Critical Depth (in) = 10.29
Length (ft) = 160 Kj (JLC) = 1.3 Downstream Line # = 9

	INVERT (ft)	DEPTH (in)	HGL (ft)	EGL (ft)	CROWN (ft)	NAT GND (ft)	AREA (ft^2)	VEL (ft/s)
UPSTREAM	1121.70	10.28	1122.56	1122.88	1123.70	1129.50	1.29	4.56
DNSTREAM	1120.10	24.00	1122.25	1122.31	1122.10	1129.10	3.14	1.87
SLOPE(%)	1.000		0.189	0.357		0.250		

		CATCHMENT	CUMULATIVE		
Area (ac)	=	0.0	0.0		
Drainage Time (min)	=	0.00	0.68		
Intensity (in/h)	=	0.00	7.56	TOTAL	UNIFORM
Runoff Coefficient	=	0.00	0.00	FLOW	CAPACITY
Rational Flow (cfs)	=	0.00	0.00	(cfs)	(cfs)
Known Flow (cfs)	=	5.86	5.86	5.86	24.50

Note: Transitional flow exists in this line

STORM SEWER INLET REPORT

FLOW RESULTS (cfs)
Flow from Catchment = 0.00
Carryover from previous inlet = 0.00
Total flow to current inlet = 0.00
Intercepted by current inlet = 0.00
Bypassed by current inlet = 0.00

PONDING WIDTH (ft) = 0.00
DEPTH AT CURB (ft) = 0.00
EFFICIENCY (%)
Curb = *
Grate = * Total = -inf
Slot = *

INPUT PARAMETERS:
Inlet Type = NONE IN SAG
Gutter Width (ft) = 0.000
Inlet n-value = 0.016
Downstream Inlet number = 28

Longitudinal Slope (ft/ft) = 0.000
Pavement Cross Slope (ft/ft) = 0.000
Normal Gutter XSlope (ft/ft) = 0.000
Gutter depression (in) = 0.00

MAIN SD1 10YR STM/10YR TW

Data File : D1E10T10.STM Return Period: 10 Yrs

Rainfall file: PHX1.RND I = 50.790/ (Tc + 9.250) ^ 0.830

LINE 31 STORM SEWER HYDRAULIC REPORT

Diameter (in) = 24 N = 0.012 Critical Depth (in) = 4.37

Length (ft) = 65 Kj (JLC) = 1.3 Downstream Line # = 30

	INVERT (ft)	DEPTH (in)	HGL (ft)	EGL (ft)	CROWN (ft)	NAT GND (ft)	AREA (ft^2)	VEL (ft/s)
UPSTREAM	1124.07	4.37	1124.58	1124.70	1126.07	1129.57	0.39	2.71
DNSTREAM	1121.70	15.31	1122.98	1122.98	1123.70	1129.50	2.12	0.50
SLOPE(%)	3.649		2.471	2.640		0.108		

		CATCHMENT	CUMULATIVE		
Area (ac)	=	0.0	0.0		
Drainage Time (min)	=	0.00	0.00		
Intensity (in/h)	=	0.00	8.01	TOTAL	UNIFORM
Runoff Coefficient	=	0.00	0.00	FLOW	CAPACITY
Rational Flow (cfs)	=	0.00	0.00	(cfs)	(cfs)
Known Flow (cfs)	=	1.06	1.06	1.06	46.80

STORM SEWER INLET REPORT

FLOW RESULTS (cfs)

Flow from Catchment	=	0.00	PONDING WIDTH (ft)	=	0.00
Carryover from previous inlet	=	0.00	DEPTH AT CURB (ft)	=	0.00
Total flow to current inlet	=	0.00	EFFICIENCY (%)		
Intercepted by current inlet	=	0.00	Curb = *		
Bypassed by current inlet	=	0.00	Grate = *	Total =	-inf
			Slot = *		

INPUT PARAMETERS:

Inlet Type	= NONE IN SAG		Longitudinal Slope (ft/ft)	=	0.000
Gutter Width (ft)	=	0.000	Pavement Cross Slope (ft/ft)	=	0.000
Inlet n-value	=	0.016	Normal Gutter XSlope (ft/ft)	=	0.000
Downstream Inlet number	=	29	Gutter depression (in)	=	0.00

MAIN SD1 10YR STM/10YR TW

Data File : D1E10T10.STM Return Period: 10 Yrs

Rainfall file: PHX1.RND I = 50.790/ (Tc + 9.250) ^ 0.830

LINE 32 STORM SEWER HYDRAULIC REPORT

Diameter (in) = 36 N = 0.024 Critical Depth (in) = 17.19

Length (ft) = 9 Kj (JLC) = 1.0 Downstream Line # = 10

	INVERT (ft)	DEPTH (in)	HGL (ft)	EGL (ft)	CROWN (ft)	NAT GND (ft)	AREA (ft^2)	VEL (ft/s)
UPSTREAM	1120.60	18.81	1122.62	1123.08	1123.60	1125.25	3.74	5.41
DNSTREAM	1120.12	26.80	1122.35	1122.55	1123.12	1129.00	5.64	3.58
SLOPE(%)	5.341		2.974	5.809		-41.667		

		CATCHMENT	CUMULATIVE		
Area (ac)	=	0.0	0.0		
Drainage Time (min)	=	0.00	0.00		
Intensity (in/h)	=	0.00	8.01	TOTAL	UNIFORM
Runoff Coefficient	=	0.00	0.00	FLOW	CAPACITY
Rational Flow (cfs)	=	0.00	0.00	(cfs)	(cfs)
Known Flow (cfs)	=	20.20	20.20	20.20	83.49

STORM SEWER INLET REPORT

FLOW RESULTS (cfs)

Flow from Catchment	=	0.00	PONDING WIDTH (ft)	=	0.00	
Carryover from previous inlet	=	0.00	DEPTH AT CURB (ft)	=	0.00	
Total flow to current inlet	=	0.00	EFFICIENCY (%)			
Intercepted by current inlet	=	0.00	Curb =	*		
Bypassed by current inlet	=	0.00	Grate =	*	Total =	-inf
			Slot =	*		

INPUT PARAMETERS:

Inlet Type	= NONE IN SAG		Longitudinal Slope (ft/ft)	=	0.000
Gutter Width (ft)	=	0.000	Pavement Cross Slope (ft/ft)	=	0.000
Inlet n-value	=	0.016	Normal Gutter XSlope (ft/ft)	=	0.000
Downstream Inlet number	=	30	Gutter depression (in)	=	0.00

MAIN SD1 10YR STM/10YR TW

Data File : D1E10T10.STM Return Period: 10 Yrs

Rainfall file: PHX1.RND I = 50.790/ (Tc + 9.250) ^ 0.830

LINE 33 STORM SEWER HYDRAULIC REPORT

Diameter (in) = 24 N = 0.012 Critical Depth (in) = 5.36

Length (ft) = 114 Kj (JLC) = 1.3 Downstream Line # = 10

	INVERT (ft)	DEPTH (in)	HGL (ft)	EGL (ft)	CROWN (ft)	NAT GND (ft)	AREA (ft²)	VEL (ft/s)
UPSTREAM	1126.09	5.36	1126.72	1126.87	1128.09	1131.59	0.52	3.04
DNSTREAM	1120.96	17.53	1122.42	1122.43	1122.96	1129.00	2.46	0.65
SLOPE(%)	4.505		3.774	3.894		2.272		

		CATCHMENT	CUMULATIVE		
Area (ac)	=	0.0	0.0		
Drainage Time (min)	=	0.00	0.00		
Intensity (in/h)	=	0.00	8.01	TOTAL	UNIFORM
Runoff Coefficient	=	0.00	0.00	FLOW	CAPACITY
Rational Flow (cfs)	=	0.00	0.00	(cfs)	(cfs)
Known Flow (cfs)	=	1.59	1.59	1.59	52.00

STORM SEWER INLET REPORT

FLOW RESULTS (cfs)

Flow from Catchment	=	0.00	PONDING WIDTH (ft)	=	0.00
Carryover from previous inlet	=	0.00	DEPTH AT CURB (ft)	=	0.00
Total flow to current inlet	=	0.00	EFFICIENCY (%)		
Intercepted by current inlet	=	0.00	Curb = *		
Bypassed by current inlet	=	0.00	Grate = *	Total =	-inf
			Slot = *		

INPUT PARAMETERS:

Inlet Type	= NONE IN SAG		Longitudinal Slope (ft/ft)	=	0.000
Gutter Width (ft)	=	0.000	Pavement Cross Slope (ft/ft)	=	0.000
Inlet n-value	=	0.016	Normal Gutter XSlope (ft/ft)	=	0.000
Downstream Inlet number	=	31	Gutter depression (in)	=	0.00

MAIN SD1 10YR STM/10YR TW

Data File : D1E10T10.STM Return Period: 10 Yrs
Rainfall file: PHX1.RND I = 50.790/ (Tc + 9.250) ^ 0.830

LINE 34 STORM SEWER HYDRAULIC REPORT

Diameter (in) = 24 N = 0.012 Critical Depth (in) = 4.29
Length (ft) = 43 Kj (JLC) = 1.3 Downstream Line # = 11

	INVERT (ft)	DEPTH (in)	HGL (ft)	EGL (ft)	CROWN (ft)	NAT GND (ft)	AREA (ft²)	VEL (ft/s)
UPSTREAM	1124.50	4.29	1125.00	1125.11	1126.50	1130.00	0.38	2.68
DNSTREAM	1121.41	14.33	1122.60	1122.61	1123.41	1129.00	1.96	0.52
SLOPE(%)	7.205		5.576	5.826		2.326		

	CATCHMENT	CUMULATIVE	TOTAL FLOW (cfs)	UNIFORM CAPACITY (cfs)
Area (ac) =	0.0	0.0		
Drainage Time (min) =	0.00	0.00		
Intensity (in/h) =	0.00	8.01		
Runoff Coefficient =	0.00	0.00		
Rational Flow (cfs) =	0.00	0.00		
Known Flow (cfs) =	1.02	1.02	1.02	65.77

STORM SEWER INLET REPORT

FLOW RESULTS (cfs)
Flow from Catchment = 0.00
Carryover from previous inlet = 0.00
Total flow to current inlet = 0.00
Intercepted by current inlet = 0.00
Bypassed by current inlet = 0.00

PONDING WIDTH (ft) = 0.00
DEPTH AT CURB (ft) = 0.00
EFFICIENCY (%)
Curb = *
Grate = * Total = -inf
Slot = *

INPUT PARAMETERS:
Inlet Type = NONE IN SAG
Gutter Width (ft) = 0.000
Inlet n-value = 0.016
Downstream Inlet number = 32
Longitudinal Slope (ft/ft) = 0.000
Pavement Cross Slope (ft/ft) = 0.000
Normal Gutter XSlope (ft/ft) = 0.000
Gutter depression (in) = 0.00

MAIN SD1 10YR STM/10YR TW

Data File : D1E10T10.STM Return Period: 10 Yrs

Rainfall file: PHX1.RND I = 50.790/ (Tc + 9.250) ^ 0.830

LINE 35 STORM SEWER HYDRAULIC REPORT

Diameter (in) = 24 N = 0.012 Critical Depth (in) = 10.82

Length (ft) = 125 Kj (JLC) = 1.3 Downstream Line # = 12

	INVERT (ft)	DEPTH (in)	HGL (ft)	EGL (ft)	CROWN (ft)	NAT GND (ft)	AREA (ft^2)	VEL (ft/s)
UPSTREAM	1122.68	10.82	1123.58	1123.93	1124.68	1133.20	1.38	4.72
DNSTREAM	1121.65	14.24	1122.84	1123.01	1123.65	1129.80	1.94	3.34
SLOPE(%)	0.824		0.596	0.734		2.720		

		CATCHMENT	CUMULATIVE		
Area (ac)	=	0.0	0.0		
Drainage Time (min)	=	0.00	0.46		
Intensity (in/h)	=	0.00	7.70	TOTAL	UNIFORM
Runoff Coefficient	=	0.00	0.00	FLOW	CAPACITY
Rational Flow (cfs)	=	0.00	0.00	(cfs)	(cfs)
Known Flow (cfs)	=	6.49	6.49	6.49	22.24

STORM SEWER INLET REPORT

FLOW RESULTS (cfs)

Flow from Catchment	=	0.00	PONDING WIDTH (ft)	=	0.00
Carryover from previous inlet	=	0.00	DEPTH AT CURB (ft)	=	0.00
Total flow to current inlet	=	0.00	EFFICIENCY (%)		
Intercepted by current inlet	=	0.00	Curb = *		
Bypassed by current inlet	=	0.00	Grate = *	Total =	-inf
			Slot = *		

INPUT PARAMETERS:

Inlet Type	= NONE IN SAG		Longitudinal Slope (ft/ft)	=	0.000
Gutter Width (ft)	=	0.000	Pavement Cross Slope (ft/ft)	=	0.000
Inlet n-value	=	0.016	Normal Gutter XSlope (ft/ft)	=	0.000
Downstream Inlet number	=	33	Gutter depression (in)	=	0.00

MAIN SD1 10YR STM/10YR TW

Data File : D1E10T10.STM Return Period: 10 Yrs

Rainfall file: PHX1.RND I = 50.790/ (Tc + 9.250) ^ 0.830

LINE 36 STORM SEWER HYDRAULIC REPORT

Diameter (in) = 24 N = 0.012 Critical Depth (in) = 8.75

Length (ft) = 51 Kj (JLC) = 0.0 Downstream Line # = 35

	INVERT (ft)	DEPTH (in)	HGL (ft)	EGL (ft)	CROWN (ft)	NAT GND (ft)	AREA (ft^2)	VEL (ft/s)
UPSTREAM	1124.04	8.04	1124.71	1125.04	1126.04	1132.58	0.92	4.59
DNSTREAM	1123.78	8.04	1124.45	1124.78	1125.78	1133.20	0.92	4.59
SLOPE(%)	0.510		0.510	0.510		-1.216		

		CATCHMENT	CUMULATIVE		
Area (ac)	=	0.0	0.0		
Drainage Time (min)	=	0.00	0.27		
Intensity (in/h)	=	0.00	7.82	TOTAL	UNIFORM
Runoff Coefficient	=	0.00	0.00	FLOW	CAPACITY
Rational Flow (cfs)	=	0.00	0.00	(cfs)	(cfs)
Known Flow (cfs)	=	4.24	4.24	4.24	17.50

Note: Supercritical flow detected - Normal depth assumed

STORM SEWER INLET REPORT

FLOW RESULTS (cfs)

Flow from Catchment	=	0.00	PONDING WIDTH (ft)	=	0.00
Carryover from previous inlet	=	0.00	DEPTH AT CURB (ft)	=	0.00
Total flow to current inlet	=	0.00	EFFICIENCY (%)		
Intercepted by current inlet	=	0.00	Curb = *		
Bypassed by current inlet	=	0.00	Grate = *	Total =	-inf
			Slot = *		

INPUT PARAMETERS:

Inlet Type	= NONE IN SAG		Longitudinal Slope (ft/ft)	=	0.000
Gutter Width (ft)	=	0.000	Pavement Cross Slope (ft/ft)	=	0.000
Inlet n-value	=	0.016	Normal Gutter XSlope (ft/ft)	=	0.000
Downstream Inlet number	=	34	Gutter depression (in)	=	0.00

MAIN SD1 10YR STM/10YR TW

Data File : D1E10T10.STM Return Period: 10 Yrs

Rainfall file: PHX1.RND I = 50.790/ (Tc + 9.250) ^ 0.830

LINE 37 STORM SEWER HYDRAULIC REPORT

Diameter (in) = 24 N = 0.012 Critical Depth (in) = 6.81

Length (ft) = 57 Kj (JLC) = 0.0 Downstream Line # = 36

	INVERT (ft)	DEPTH (in)	HGL (ft)	EGL (ft)	CROWN (ft)	NAT GND (ft)	AREA (ft²)	VEL (ft/s)
UPSTREAM	1124.43	6.81	1125.00	1125.19	1126.43	1129.93	0.73	3.50
DNSTREAM	1124.14	6.84	1124.71	1124.90	1126.14	1132.58	0.74	3.48
SLOPE(%)	0.509		0.504	0.509		-4.649		

		CATCHMENT	CUMULATIVE		
Area (ac)	=	0.0	0.0		
Drainage Time (min)	=	0.00	0.00		
Intensity (in/h)	=	0.00	8.01	TOTAL	UNIFORM
Runoff Coefficient	=	0.00	0.00	FLOW	CAPACITY
Rational Flow (cfs)	=	0.00	0.00	(cfs)	(cfs)
Known Flow (cfs)	=	2.57	2.57	2.57	17.48

STORM SEWER INLET REPORT

FLOW RESULTS (cfs)

Flow from Catchment	=	0.00	PONDING WIDTH (ft)	=	0.00
Carryover from previous inlet	=	0.00	DEPTH AT CURB (ft)	=	0.00
Total flow to current inlet	=	0.00	EFFICIENCY (%)		
Intercepted by current inlet	=	0.00	Curb = *		
Bypassed by current inlet	=	0.00	Grate = *	Total =	-inf
			Slot = *		

INPUT PARAMETERS:

Inlet Type	= NONE IN SAG		Longitudinal Slope (ft/ft)	=	0.000
Gutter Width (ft)	=	0.000	Pavement Cross Slope (ft/ft)	=	0.000
Inlet n-value	=	0.016	Normal Gutter XSlope (ft/ft)	=	0.000
Downstream Inlet number	=	35	Gutter depression (in)	=	0.00

MAIN SD1 10YR STM/10YR TW

Data File : D1E10T10.STM Return Period: 10 Yrs

Rainfall file: PHX1.RND I = 50.790/ (Tc + 9.250) ^ 0.830

LINE 38 STORM SEWER HYDRAULIC REPORT

Diameter (in) = 24 N = 0.012 Critical Depth (in) = 3.70

Length (ft) = 39 Kj (JLC) = 1.3 Downstream Line # = 13

	INVERT (ft)	DEPTH (in)	HGL (ft)	EGL (ft)	CROWN (ft)	NAT GND (ft)	AREA (ft^2)	VEL (ft/s)
UPSTREAM	1124.72	3.70	1125.15	1125.25	1126.72	1130.22	0.31	2.47
DNSTREAM	1121.42	18.20	1122.94	1122.94	1123.42	1130.10	2.56	0.30
SLOPE(%)	8.492		5.679	5.918		0.308		

		CATCHMENT	CUMULATIVE		
Area (ac)	=	0.0	0.0		
Drainage Time (min)	=	0.00	0.00		
Intensity (in/h)	=	0.00	8.01	TOTAL	UNIFORM
Runoff Coefficient	=	0.00	0.00	FLOW	CAPACITY
Rational Flow (cfs)	=	0.00	0.00	(cfs)	(cfs)
Known Flow (cfs)	=	0.76	0.76	0.76	71.40

STORM SEWER INLET REPORT

FLOW RESULTS (cfs)

Flow from Catchment	=	0.00	PONDING WIDTH (ft)	=	0.00
Carryover from previous inlet	=	0.00	DEPTH AT CURB (ft)	=	0.00
Total flow to current inlet	=	0.00	EFFICIENCY (%)		
Intercepted by current inlet	=	0.00	Curb = *		
Bypassed by current inlet	=	0.00	Grate = *	Total =	-inf
			Slot = *		

INPUT PARAMETERS:

Inlet Type	= NONE IN SAG		Longitudinal Slope (ft/ft)	=	0.000
Gutter Width (ft)	=	0.000	Pavement Cross Slope (ft/ft)	=	0.000
Inlet n-value	=	0.016	Normal Gutter XSlope (ft/ft)	=	0.000
Downstream Inlet number	=	36	Gutter depression (in)	=	0.00

MAIN SD1 10YR STM/10YR TW

Data File : D1E10T10.STM Return Period: 10 Yrs

Rainfall file: PHX1.RND I = 50.790/ (Tc + 9.250) ^ 0.830

LINE 39 STORM SEWER HYDRAULIC REPORT

Diameter (in) = 24 N = 0.012 Critical Depth (in) = 7.89

Length (ft) = 12 Kj (JLC) = 1.3 Downstream Line # = 15

	INVERT (ft)	DEPTH (in)	HGL (ft)	EGL (ft)	CROWN (ft)	NAT GND (ft)	AREA (ft^2)	VEL (ft/s)
UPSTREAM	1122.90	17.12	1124.37	1124.40	1124.90	1127.98	2.40	1.44
DNSTREAM	1122.84	17.89	1124.33	1124.36	1124.84	1128.35	2.51	1.37
SLOPE(%)	0.500		0.311	0.335		-3.083		

		CATCHMENT	CUMULATIVE		
Area (ac)	=	0.0	0.0		
Drainage Time (min)	=	0.00	0.00		
Intensity (in/h)	=	0.00	8.01	TOTAL	UNIFORM
Runoff Coefficient	=	0.00	0.00	FLOW	CAPACITY
Rational Flow (cfs)	=	0.00	0.00	(cfs)	(cfs)
Known Flow (cfs)	=	3.45	3.45	3.45	17.33

STORM SEWER INLET REPORT

FLOW RESULTS (cfs)

Flow from Catchment	=	0.00	PONDING WIDTH (ft)	=	0.00
Carryover from previous inlet	=	0.00	DEPTH AT CURB (ft)	=	0.00
Total flow to current inlet	=	0.00	EFFICIENCY (%)		
Intercepted by current inlet	=	0.00	Curb = *		
Bypassed by current inlet	=	0.00	Grate = *	Total =	-inf
			Slot = *		

INPUT PARAMETERS:

Inlet Type	= NONE IN SAG		Longitudinal Slope (ft/ft)	=	0.000
Gutter Width (ft)	=	0.000	Pavement Cross Slope (ft/ft)	=	0.000
Inlet n-value	=	0.016	Normal Gutter XSlope (ft/ft)	=	0.000
Downstream Inlet number	=	37	Gutter depression (in)	=	0.00

CATCH BASIN 103 TO SALT RIVER OUTFALL

101/19/94 NOTE: INCLUDES FUTURE STORM DRAINS (103 FU & 115 FU) NEAR UNIVERSITY DRIVE. RCP (n= 0.012)

STORM SEWER SUMMARY REPORT
MAIN SD1 100YR STM/10YR TW
FILE: D1E10010.STM

RAINFALL FILE: PHX1.RND 100 YEAR DESIGN STORM I = 87.730/ (Tc + 10.500) ^ 0.850

LINE ID		FLOW RATE INFO						PIPE INFO					HYDRAULIC INFO		
LINE#	DESCRIPTION DOWNLINE#	INC AR TOT AR (ac)	RUNOFFC WEIGHTD C	INLTIME Tc (min)	INLT I TOTL I (in/h)	INC CIA TOT CIA (cfs)	INPUTQ TOTALQ (cfs)	UNIFORM FLOWCAP (cfs)	SIZE/ TYPE (in)	INVERT UP/DOWN (ft)	PIPE LEN (ft)	NVAL INVSLOP (ft/ft)	HGLSLOPE JLC (ft/ft)	HYD GRD UP/DOWN (ft)	VEL UP/DOWN (ft/s)
1	Pipe #140	0.0	0.00	0.00	11.89	0.00	144.30		72D	1111.73	122	0.012	0.001	1120.82	5.10
	DNLN = 0	0.0	-nan	18.08	5.08	0.00	144.30	211.8	72D	1111.47		0.002	1.00	1120.70	5.10
2	Pipe #139	0.0	0.00	0.00	11.89	0.00	144.30		72D	1112.34	275	0.012	0.001	1121.26	5.10
	DNLN = 1	0.0	-nan	17.18	5.21	0.00	144.30	214.3	72D	1111.74		0.002	0.41	1120.99	5.10
3	Pipe #136	0.0	0.00	0.00	11.89	0.00	133.90		72D	1113.50	522	0.012	0.001	1121.73	4.74
	DNLN = 2	0.0	-nan	15.35	5.53	0.00	133.90	215.4	72D	1112.35		0.002	0.06	1121.28	4.74
4	Pipe #133	0.0	0.00	0.00	11.89	0.00	123.80		72D	1114.15	300	0.012	0.001	1121.96	4.38
	DNLN = 3	0.0	-nan	14.21	5.74	0.00	123.80	213.6	72D	1113.50		0.002	0.03	1121.74	4.38
5	Pipe #131	0.0	0.00	0.00	11.89	0.00	121.20		72D	1114.70	250	0.012	0.001	1122.13	4.29
	DNLN = 4	0.0	-nan	13.23	5.94	0.00	121.20	213.2	72D	1114.16		0.002	0.00	1121.96	4.29
6	Pipe #129	0.0	0.00	0.00	11.89	0.00	115.40		72D	1115.25	250	0.012	0.001	1122.30	4.08
	DNLN = 5	0.0	-nan	12.21	6.17	0.00	115.40	213.3	72D	1114.71		0.002	0.03	1122.14	4.08
7	Pipe #128	0.0	0.00	0.00	11.89	0.00	115.40		72D	1116.06	369	0.012	0.001	1122.55	4.08
	DNLN = 6	0.0	-nan	10.71	6.54	0.00	115.40	213.7	72D	1115.26		0.002	0.07	1122.32	4.08
8	Pipe #125	0.0	0.00	0.00	11.89	0.00	47.10		42D	1119.44	273	0.012	0.002	1123.07	4.90
	DNLN = 7	0.0	-nan	9.78	6.80	0.00	47.10	54.0	42D	1118.77		0.002	0.06	1122.56	4.90
9	Pipe #124	0.0	0.00	0.00	11.89	0.00	47.10		42D	1119.99	217	0.012	0.002	1123.87	4.90
	DNLN = 8	0.0	-nan	9.04	7.01	0.00	47.10	54.4	42D	1119.45		0.002	1.04	1123.46	4.90
10	Pipe #120	0.0	0.00	0.00	11.89	0.00	34.80		42D	1120.14	60	0.012	0.001	1124.25	3.62
	DNLN = 9	0.0	-nan	8.76	7.10	0.00	34.80	52.7	42D	1120.00		0.002	0.87	1124.19	3.62
11	Pipe #118	0.0	0.00	0.00	11.89	0.00	32.20		42D	1120.54	162	0.012	0.001	1124.40	3.35
	DNLN = 10	0.0	-nan	7.95	7.36	0.00	32.20	53.5	42D	1120.15		0.002	0.03	1124.26	3.35
12	Pipe #116	0.0	0.00	0.00	11.89	0.00	30.50		42D	1120.88	136	0.012	0.001	1124.51	3.17
	DNLN = 11	0.0	-nan	7.24	7.61	0.00	30.50	53.7	42D	1120.55		0.002	0.03	1124.40	3.17
13	Pipe #112	0.0	0.00	0.00	11.89	0.00	20.00		30D	1121.16	112	0.012	0.002	1124.74	4.07
	DNLN = 12	0.0	-nan	6.78	7.78	0.00	20.00	21.8	30D	1120.89		0.002	0.03	1124.51	4.07

STORM SEWER SUMMARY REPORT (continued)
MAIN SD1 100YR STM/10YR TW
FILE: D1E10010.STM

RAINFALL FILE: PHX1.RND 100 YEAR DESIGN STORM I = 87.730/ (Tc + 10.500) ^ 0.850

LINE ID		FLOW RATE INFO						PIPE INFO					HYDRAULIC INFO		
LINE#	DESCRIPTION DOWNLINE#	INC AR TOT AR (ac)	RUNOFFC WEIGHTD C	INLTIME Tc (min)	INLT I TOTL I (in/h)	INC CIA TOT CIA (cfs)	INPUTQ TOTALQ (cfs)	UNIFORM FLOWCAP (cfs)	SIZE/ TYPE (in)	INVERT UP/DOWN (ft)	PIPE LEN (ft)	NVAL INVSLOP (ft/ft)	HGLSLOPE JLC (ft/ft)	HYD GRD UP/DOWN (ft)	VEL UP/DOWN (ft/s)
14	Pipe #110	0.0	0.00	0.00	11.89	0.00	18.70		30D	1122.03	346	0.012	0.002	1125.36	3.81
	DNLN = 13	0.0	-nan	5.27	8.41	0.00	18.70	22.2	30D	1121.17		0.002	0.03	1124.75	3.81
15	Pipe #107	0.0	0.00	0.00	11.89	0.00	16.90		30D	1122.73	280	0.012	0.001	1125.78	3.44
	DNLN = 14	0.0	-nan	3.91	9.08	0.00	16.90	22.1	30D	1122.04		0.002	0.04	1125.37	3.44
16	Pipe #105	0.0	0.00	0.00	11.89	0.00	11.30		24D	1123.35	239	0.012	0.002	1126.29	3.60
	DNLN = 15	0.0	-nan	2.80	9.72	0.00	11.30	12.4	24D	1122.74		0.003	0.04	1125.78	3.60
17	Pipe #104	0.0	0.00	0.00	11.89	0.00	8.40		24D	1123.49	32	0.024	0.005	1126.73	2.67
	DNLN = 16	0.0	-nan	2.61	9.85	0.00	8.40	6.8	24D	1123.39		0.003	1.44	1126.58	2.67
18	Pipe #103fu	0.0	0.00	0.00	11.89	0.00	4.30		24D	1123.92	118	0.012	0.000	1126.82	1.37
	DNLN = 17	0.0	-nan	1.17	10.87	0.00	4.30	14.8	24D	1123.49		0.004	0.45	1126.78	1.37
19	Pipe #103	0.0	0.00	0.00	11.89	0.00	1.30		24D	1124.01	29	0.024	0.000	1126.82	0.41
	DNLN = 18	0.0	-nan	0.00	11.89	0.00	1.30	6.8	24D	1123.92		0.003	0.04	1126.82	0.41
20	CB #103	0.0	0.00	0.00	11.89	0.00	1.30		24D	1124.02	0	0.012	0.281	1126.83	0.41
	DNLN = 19	0.0	-nan	0.00	11.89	0.00	1.30	0.0	24D	1124.02		0.000	1.04	1126.83	0.41
21	Pipe #138	0.0	0.00	0.00	11.89	0.00	10.32		24D	1136.76	64	0.024	0.252	1137.90	5.59
	DNLN = 2	0.0	-nan	0.26	11.64	0.00	10.32	72.7	24D	1115.50		0.352	1.30	1121.78	3.28
22	Pipe #137	0.0	0.00	0.00	11.89	0.00	5.32		24D	1137.42	59	0.012	0.006	1138.25	4.41
	DNLN = 21	0.0	-nan	0.00	11.89	0.00	5.32	23.9	24D	1136.86		0.009	0.04	1137.92	3.16
23	Pipe #135	0.0	0.00	0.00	11.89	0.00	10.11		24D	1133.03	40	0.024	0.299	1134.16	5.55
	DNLN = 3	0.0	-nan	0.26	11.64	0.00	10.11	82.0	24D	1116.67		0.448	1.30	1122.18	3.22
24	Pipe #134	0.0	0.00	0.00	11.89	0.00	5.13		24D	1133.74	59	0.012	0.006	1134.55	4.36
	DNLN = 23	0.0	-nan	0.00	11.89	0.00	5.13	24.9	24D	1133.13		0.010	0.04	1134.18	3.09
25	Pipe #132	0.0	0.00	0.00	11.89	0.00	2.65		24D	1130.95	39	0.024	0.242	1131.78	3.54
	DNLN = 4	0.0	-nan	0.00	11.89	0.00	2.65	74.4	24D	1117.45		0.369	1.30	1122.34	0.84
26	Pipe #130pl	0.0	0.00	0.00	11.89	0.00	5.78		24D	1125.76	29	0.024	0.142	1126.61	4.54
	DNLN = 5	0.0	-nan	0.70	11.25	0.00	5.78	65.9	24D	1117.70		0.289	1.30	1122.50	1.84

STORM SEWER SUMMARY REPORT (continued)
MAIN SD1 100YR STM/10YR TW
FILE: D1E10010.STM

RAINFALL FILE: PHX1.RND 100 YEAR DESIGN STORM I = 87.730/ (Tc + 10.500) ^ 0.850

LINE ID		FLOW RATE INFO						PIPE INFO					HYDRAULIC INFO		
LINE#	DESCRIPTION DOWNLINE#	INC AR TOT AR (ac)	RUNOFFC WEIGHTD C	INLTIME Tc (min)	INLT I TOTL I (in/h)	INC CIA TOT CIA (cfs)	INPUTQ TOTALQ (cfs)	UNIFORM FLOWCAP (cfs)	SIZE/ TYPE (in)	INVERT UP/DOWN (ft)	PIPE LEN (ft)	NVAL INVSLOP (ft/ft)	HGLSLOPE JLC (ft/ft)	HYD GRD UP/DOWN (ft)	VEL UP/DOWN (ft/s)
27	Pipe #130p2	0.0	0.00	0.00	11.89	0.00	5.78		24D	1126.46	139	0.024	0.010	1128.06	2.15
	DNLN = 26	0.0	-nan	0.00	11.89	0.00	5.78	8.7	24D	1125.76		0.005	0.04	1126.62	4.45
28	Pipe #127	0.0	0.00	0.00	11.89	0.00	21.17		24D	1120.73	97	0.012	0.007	1123.61	6.74
	DNLN = 7	0.0	-nan	0.46	11.46	0.00	21.17	40.0	24D	1118.14		0.027	1.30	1122.88	6.74
29	Pipe #126	0.0	0.00	0.00	11.89	0.00	10.74		24D	1121.30	95	0.012	0.002	1123.83	3.42
	DNLN = 28	0.0	-nan	0.00	11.89	0.00	10.74	17.2	24D	1120.83		0.005	0.04	1123.64	3.42
30	Pipe #123	0.0	0.00	0.00	11.89	0.00	8.23		24D	1121.70	160	0.012	0.001	1124.53	2.62
	DNLN = 9	0.0	-nan	0.76	11.20	0.00	8.23	24.5	24D	1120.10		0.010	1.30	1124.35	2.62
31	Pipe #122	0.0	0.00	0.00	11.89	0.00	1.73		24D	1124.07	65	0.012	0.001	1124.76	2.29
	DNLN = 30	0.0	-nan	0.00	11.89	0.00	1.73	46.8	24D	1121.70		0.036	1.30	1124.67	0.55
32	Pipe #121	0.0	0.00	0.00	11.89	0.00	51.20		36D	1120.60	9	0.024	0.111	1125.45	7.24
	DNLN = 10	0.0	-nan	0.00	11.89	0.00	51.20	83.5	36D	1120.12		0.053	1.00	1124.45	7.24
33	Pipe #119	0.0	0.00	0.00	11.89	0.00	2.59		24D	1126.09	114	0.012	0.021	1126.91	3.51
	DNLN = 10	0.0	-nan	0.00	11.89	0.00	2.59	52.0	24D	1120.96		0.045	1.30	1124.52	0.82
34	Pipe #117	0.0	0.00	0.00	11.89	0.00	1.66		24D	1124.50	43	0.012	0.012	1125.15	3.08
	DNLN = 11	0.0	-nan	0.00	11.89	0.00	1.66	65.8	24D	1121.41		0.072	1.30	1124.62	0.53
35	Pipe #115	0.0	0.00	0.00	11.89	0.00	10.56		24D	1122.68	125	0.012	0.002	1124.95	3.36
	DNLN = 12	0.0	-nan	0.46	11.47	0.00	10.56	22.2	24D	1121.65		0.008	1.30	1124.71	3.36
36	Pipe ~~#115U~~ 175	0.0	0.00	0.00	11.89	0.00	6.90		24D	1124.04	52	0.012	0.001	1124.98	4.76
	DNLN = 35	0.0	-nan	0.25	11.65	0.00	6.90	17.3	24D	1123.78		0.005	0.04	1124.95	3.61
37	Pipe #113	0.0	0.00	0.00	11.89	0.00	4.18		24D	1124.43	52	0.012	0.003	1125.15	4.08
	DNLN = 36	0.0	-nan	0.00	11.89	0.00	4.18	21.2	24D	1124.04		0.008	0.00	1124.98	2.88
38	Pipe #111	0.0	0.00	0.00	11.89	0.00	1.24		24D	1124.72	39	0.012	0.005	1125.28	2.83
	DNLN = 13	0.0	-nan	0.00	11.89	0.00	1.24	71.4	24D	1121.42		0.085	1.30	1125.08	0.39
39	Pipe #106	0.0	0.00	0.00	11.89	0.00	5.62		24D	1122.90	12	0.012	0.006	1126.09	1.79
	DNLN = 15	0.0	-nan	0.00	11.89	0.00	5.62	17.3	24D	1122.84		0.005	1.30	1126.02	1.79

MAIN SD1 100YR STM/10YR TW

Data File : D1E10010.STM Return Period: 100 Yrs

Rainfall file: PHX1.RND I = 87.730/ (Tc + 10.500) ^ 0.850

LINE 1 STORM SEWER HYDRAULIC REPORT

Diameter (in) = 72 N = 0.012 Critical Depth (in) = 38.36

Length (ft) = 122 Kj (JLC) = 1.0 Downstream Line # = OUTFALL

	INVERT (ft)	DEPTH (in)	HGL (ft)	EGL (ft)	CROWN (ft)	NAT GND (ft)	AREA (ft^2)	VEL (ft/s)
UPSTREAM	1111.73	72.00	1120.82	1121.23	1117.73	1125.00	28.27	5.10
DNSTREAM	1111.47	72.00	1120.70	1121.10	1117.47	1119.47	28.27	5.10
SLOPE(%)	0.213		0.099	0.099		4.533		

		CATCHMENT	CUMULATIVE		
Area (ac)	=	0.0	0.0		
Drainage Time (min)	=	0.00	18.08		
Intensity (in/h)	=	0.00	5.08	TOTAL	UNIFORM
Runoff Coefficient	=	0.00	0.00	FLOW	CAPACITY
Rational Flow (cfs)	=	0.00	0.00	(cfs)	(cfs)
Known Flow (cfs)	=	144.30	144.30	144.30	211.84

Note: Upstream surcharge (ft) = 3.09

STORM SEWER INLET REPORT

FLOW RESULTS (cfs)

Flow from Catchment	=	0.00	PONDING WIDTH (ft)	=	0.00
Carryover from previous inlet	=	0.00	DEPTH AT CURB (ft)	=	0.00
Total flow to current inlet	=	0.00	EFFICIENCY (%)		
Intercepted by current inlet	=	0.00	Curb = *		
Bypassed by current inlet	=	0.00	Grate = *	Total =	-inf
			Slot = *		

INPUT PARAMETERS:

Inlet Type	= NONE IN SAG		Longitudinal Slope (ft/ft)	=	0.000
Gutter Width (ft)	=	0.000	Pavement Cross Slope (ft/ft)	=	0.000
Inlet n-value	=	0.016	Normal Gutter XSlope (ft/ft)	=	0.000
Downstream Inlet number	=	0	Gutter depression (in)	=	0.00

MAIN SD1 100YR STM/10YR TW

Data File : D1E10010.STM Return Period: 100 Yrs

Rainfall file: PHX1.RND I = 87.730/ (Tc + 10.500) ^ 0.850

LINE 2 STORM SEWER HYDRAULIC REPORT

Diameter (in) = 72 N = 0.012 Critical Depth (in) = 38.36

Length (ft) = 275 Kj (JLC) = 0.4 Downstream Line # = 1

	INVERT (ft)	DEPTH (in)	HGL (ft)	EGL (ft)	CROWN (ft)	NAT GND (ft)	AREA (ft^2)	VEL (ft/s)
UPSTREAM	1112.34	72.00	1121.26	1121.66	1118.34	1123.20	28.27	5.10
DNSTREAM	1111.74	72.00	1120.99	1121.39	1117.74	1125.00	28.27	5.10
SLOPE(%)	0.218		0.099	0.099		-0.655		

		CATCHMENT	CUMULATIVE		
Area (ac)	=	0.0	0.0		
Drainage Time (min)	=	0.00	17.18		
Intensity (in/h)	=	0.00	5.21	TOTAL	UNIFORM
Runoff Coefficient	=	0.00	0.00	FLOW	CAPACITY
Rational Flow (cfs)	=	0.00	0.00	(cfs)	(cfs)
Known Flow (cfs)	=	144.30	144.30	144.30	214.34

Note: Upstream surcharge (ft) = 2.92

STORM SEWER INLET REPORT

FLOW RESULTS (cfs)

Flow from Catchment	=	0.00	PONDING WIDTH (ft)	=	0.00
Carryover from previous inlet	=	0.00	DEPTH AT CURB (ft)	=	0.00
Total flow to current inlet	=	0.00	EFFICIENCY (%)		
Intercepted by current inlet	=	0.00	Curb = *		
Bypassed by current inlet	=	0.00	Grate = *	Total =	-inf
			Slot = *		

INPUT PARAMETERS:

Inlet Type	= NONE IN SAG		Longitudinal Slope (ft/ft)	=	0.000
Gutter Width (ft)	=	0.000	Pavement Cross Slope (ft/ft)	=	0.000
Inlet n-value	=	0.016	Normal Gutter XSlope (ft/ft)	=	0.000
Downstream Inlet number	=	1	Gutter depression (in)	=	0.00

MAIN SD1 100YR STM/10YR TW

Data File : D1E10010.STM Return Period: 100 Yrs

Rainfall file: PHX1.RND I = 87.730/ (Tc + 10.500) ^ 0.850

LINE 3 STORM SEWER HYDRAULIC REPORT

Diameter (in) = 72 N = 0.012 Critical Depth (in) = 36.95

Length (ft) = 522 Kj (JLC) = 0.1 Downstream Line # = 2

	INVERT (ft)	DEPTH (in)	HGL (ft)	EGL (ft)	CROWN (ft)	NAT GND (ft)	AREA (ft²)	VEL (ft/s)
UPSTREAM	1113.50	72.00	1121.73	1122.08	1119.50	1124.15	28.27	4.74
DNSTREAM	1112.35	72.00	1121.28	1121.63	1118.35	1123.20	28.27	4.74
SLOPE(%)	0.220		0.085	0.085		0.182		

	CATCHMENT	CUMULATIVE		
Area (ac) =	0.0	0.0		
Drainage Time (min) =	0.00	15.35		
Intensity (in/h) =	0.00	5.53	TOTAL	UNIFORM
Runoff Coefficient =	0.00	0.00	FLOW	CAPACITY
Rational Flow (cfs) =	0.00	0.00	(cfs)	(cfs)
Known Flow (cfs) =	133.90	133.90	133.90	215.38

Note: Upstream surcharge (ft) = 2.23

STORM SEWER INLET REPORT

FLOW RESULTS (cfs)

Flow from Catchment = 0.00

Carryover from previous inlet = 0.00

Total flow to current inlet = 0.00

Intercepted by current inlet = 0.00

Bypassed by current inlet = 0.00

PONDING WIDTH (ft) = 0.00

DEPTH AT CURB (ft) = 0.00

EFFICIENCY (%)

Curb = *

Grate = * Total = -inf

Slot = *

INPUT PARAMETERS:

Inlet Type = NONE IN SAG

Gutter Width (ft) = 0.000

Inlet n-value = 0.016

Downstream Inlet number = 2

Longitudinal Slope (ft/ft) = 0.000

Pavement Cross Slope (ft/ft) = 0.000

Normal Gutter XSlope (ft/ft) = 0.000

Gutter depression (in) = 0.00

MAIN SD1 100YR STM/10YR TW

Data File : D1E10010.STM Return Period: 100 Yrs

Rainfall file: PHX1.RND I = 87.730/ (Tc + 10.500) ^ 0.850

LINE 4 STORM SEWER HYDRAULIC REPORT

Diameter (in) = 72 N = 0.012 Critical Depth (in) = 35.53

Length (ft) = 300 Kj (JLC) = 0.0 Downstream Line # = 3

	INVERT (ft)	DEPTH (in)	HGL (ft)	EGL (ft)	CROWN (ft)	NAT GND (ft)	AREA (ft^2)	VEL (ft/s)
UPSTREAM	1114.15	72.00	1121.96	1122.25	1120.15	1125.40	28.27	4.38
DNSTREAM	1113.50	72.00	1121.74	1122.04	1119.50	1124.15	28.27	4.38
SLOPE(%)	0.217		0.073	0.073		0.417		

		CATCHMENT	CUMULATIVE		
Area (ac)	=	0.0	0.0		
Drainage Time (min)	=	0.00	14.21		
Intensity (in/h)	=	0.00	5.74	TOTAL	UNIFORM
Runoff Coefficient	=	0.00	0.00	FLOW	CAPACITY
Rational Flow (cfs)	=	0.00	0.00	(cfs)	(cfs)
Known Flow (cfs)	=	123.80	123.80	123.80	213.60

Note: Upstream surcharge (ft) = 1.81

STORM SEWER INLET REPORT

FLOW RESULTS (cfs)

Flow from Catchment	=	0.00	PONDING WIDTH (ft)	=	0.00
Carryover from previous inlet	=	0.00	DEPTH AT CURB (ft)	=	0.00
Total flow to current inlet	=	0.00	EFFICIENCY (%)		
Intercepted by current inlet	=	0.00	Curb = *		
Bypassed by current inlet	=	0.00	Grate = *	Total =	-inf
			Slot = *		

INPUT PARAMETERS:

Inlet Type	= NONE IN SAG		Longitudinal Slope (ft/ft)	=	0.000
Gutter Width (ft)	=	0.000	Pavement Cross Slope (ft/ft)	=	0.000
Inlet n-value	=	0.016	Normal Gutter XSlope (ft/ft)	=	0.000
Downstream Inlet number	=	3	Gutter depression (in)	=	0.00

MAIN SD1 100YR STM/10YR TW

Data File : D1E10010.STM Return Period: 100 Yrs

Rainfall file: PHX1.RND I = 87.730/ (Tc + 10.500) ^ 0.850

LINE 5 STORM SEWER HYDRAULIC REPORT

Diameter (in) = 72 N = 0.012 Critical Depth (in) = 35.15

Length (ft) = 250 Kj (JLC) = 0.0 Downstream Line # = 4

	INVERT (ft)	DEPTH (in)	HGL (ft)	EGL (ft)	CROWN (ft)	NAT GND (ft)	AREA (ft^2)	VEL (ft/s)
UPSTREAM	1114.70	72.00	1122.13	1122.42	1120.70	1125.45	28.27	4.29
DNSTREAM	1114.16	72.00	1121.96	1122.24	1120.16	1125.40	28.27	4.29
SLOPE(%)	0.216		0.070	0.070		0.020		

		CATCHMENT	CUMULATIVE		
Area (ac)	=	0.0	0.0		
Drainage Time (min)	=	0.00	13.23		
Intensity (in/h)	=	0.00	5.94	TOTAL	UNIFORM
Runoff Coefficient	=	0.00	0.00	FLOW	CAPACITY
Rational Flow (cfs)	=	0.00	0.00	(cfs)	(cfs)
Known Flow (cfs)	=	121.20	121.20	121.20	213.25

Note: Upstream surcharge (ft) = 1.43

STORM SEWER INLET REPORT

FLOW RESULTS (cfs)

Flow from Catchment	=	0.00	PONDING WIDTH (ft)	=	0.00
Carryover from previous inlet	=	0.00	DEPTH AT CURB (ft)	=	0.00
Total flow to current inlet	=	0.00	EFFICIENCY (%)		
Intercepted by current inlet	=	0.00	Curb = *		
Bypassed by current inlet	=	0.00	Grate = *	Total =	-inf
			Slot = *		

INPUT PARAMETERS:

Inlet Type	= NONE IN SAG		Longitudinal Slope (ft/ft)	=	0.000
Gutter Width (ft)	=	0.000	Pavement Cross Slope (ft/ft)	=	0.000
Inlet n-value	=	0.016	Normal Gutter XSlope (ft/ft)	=	0.000
Downstream Inlet number	=	4	Gutter depression (in)	=	0.00

MAIN SD1 100YR STM/10YR TW

Data File : D1E10010.STM Return Period: 100 Yrs

Rainfall file: PHX1.RND I = 87.730/ (Tc + 10.500) ^ 0.850

LINE 6 STORM SEWER HYDRAULIC REPORT

Diameter (in) = 72 N = 0.012 Critical Depth (in) = 34.30

Length (ft) = 250 Kj (JLC) = 0.0 Downstream Line # = 5

	INVERT (ft)	DEPTH (in)	HGL (ft)	EGL (ft)	CROWN (ft)	NAT GND (ft)	AREA (ft^2)	VEL (ft/s)
UPSTREAM	1115.25	72.00	1122.30	1122.56	1121.25	1126.00	28.27	4.08
DNSTREAM	1114.71	72.00	1122.14	1122.40	1120.71	1125.45	28.27	4.08
SLOPE(%)	0.216		0.063	0.063		0.220		

		CATCHMENT	CUMULATIVE		
Area (ac)	=	0.0	0.0		
Drainage Time (min)	=	0.00	12.21		
Intensity (in/h)	=	0.00	6.17	TOTAL	UNIFORM
Runoff Coefficient	=	0.00	0.00	FLOW	CAPACITY
Rational Flow (cfs)	=	0.00	0.00	(cfs)	(cfs)
Known Flow (cfs)	=	115.40	115.40	115.40	213.27

Note: Upstream surcharge (ft) = 1.05

STORM SEWER INLET REPORT

FLOW RESULTS (cfs)

Flow from Catchment	=	0.00	PONDING WIDTH (ft)	=	0.00
Carryover from previous inlet	=	0.00	DEPTH AT CURB (ft)	=	0.00
Total flow to current inlet	=	0.00	EFFICIENCY (%)		
Intercepted by current inlet	=	0.00	Curb = *		
Bypassed by current inlet	=	0.00	Grate = *	Total =	-inf
			Slot = *		

INPUT PARAMETERS:

Inlet Type	= NONE IN SAG		Longitudinal Slope (ft/ft)	=	0.000
Gutter Width (ft)	=	0.000	Pavement Cross Slope (ft/ft)	=	0.000
Inlet n-value	=	0.016	Normal Gutter XSlope (ft/ft)	=	0.000
Downstream Inlet number	=	5	Gutter depression (in)	=	0.00

MAIN SD1 100YR STM/10YR TW

Data File : D1E10010.STM Return Period: 100 Yrs

Rainfall file: PHX1.RND I = 87.730/ (Tc + 10.500) ^ 0.850

LINE 7 STORM SEWER HYDRAULIC REPORT

Diameter (in) = 72 N = 0.012 Critical Depth (in) = 34.30

Length (ft) = 369 Kj (JLC) = 0.1 Downstream Line # = 6

	INVERT (ft)	DEPTH (in)	HGL (ft)	EGL (ft)	CROWN (ft)	NAT GND (ft)	AREA (ft^2)	VEL (ft/s)
UPSTREAM	1116.06	72.00	1122.55	1122.81	1122.06	1128.00	28.27	4.08
DNSTREAM	1115.26	72.00	1122.32	1122.57	1121.26	1126.00	28.27	4.08
SLOPE(%)	0.217		0.063	0.063		0.542		

		CATCHMENT	CUMULATIVE		
Area (ac)	=	0.0	0.0		
Drainage Time (min)	=	0.00	10.71		
Intensity (in/h)	=	0.00	6.54	TOTAL	UNIFORM
Runoff Coefficient	=	0.00	0.00	FLOW	CAPACITY
Rational Flow (cfs)	=	0.00	0.00	(cfs)	(cfs)
Known Flow (cfs)	=	115.40	115.40	115.40	213.67

Note: Upstream surcharge (ft) = 0.49

STORM SEWER INLET REPORT

FLOW RESULTS (cfs)

Flow from Catchment	=	0.00	PONDING WIDTH (ft)	=	0.00
Carryover from previous inlet	=	0.00	DEPTH AT CURB (ft)	=	0.00
Total flow to current inlet	=	0.00	EFFICIENCY (%)		
Intercepted by current inlet	=	0.00	Curb = *		
Bypassed by current inlet	=	0.00	Grate = *	Total =	-inf
			Slot = *		

INPUT PARAMETERS:

Inlet Type	= NONE IN SAG		Longitudinal Slope (ft/ft)	=	0.000
Gutter Width (ft)	=	0.000	Pavement Cross Slope (ft/ft)	=	0.000
Inlet n-value	=	0.016	Normal Gutter XSlope (ft/ft)	=	0.000
Downstream Inlet number	=	6	Gutter depression (in)	=	0.00

MAIN SD1 100YR STM/10YR TW

Data File : D1E10010.STM Return Period: 100 Yrs

Rainfall file: PHX1.RND I = 87.730/ (Tc + 10.500) ^ 0.850

LINE 8 STORM SEWER HYDRAULIC REPORT

Diameter (in) = 42 N = 0.012 Critical Depth (in) = 25.21

Length (ft) = 273 Kj (JLC) = 0.1 Downstream Line # = 7

	INVERT (ft)	DEPTH (in)	HGL (ft)	EGL (ft)	CROWN (ft)	NAT GND (ft)	AREA (ft^2)	VEL (ft/s)
UPSTREAM	1119.44	42.00	1123.07	1123.45	1122.94	1127.30	9.62	4.90
DNSTREAM	1118.77	42.00	1122.56	1122.94	1122.27	1128.00	9.62	4.90
SLOPE(%)	0.245		0.187	0.187		-0.256		

		CATCHMENT	CUMULATIVE		
Area (ac)	=	0.0	0.0		
Drainage Time (min)	=	0.00	9.78		
Intensity (in/h)	=	0.00	6.80	TOTAL	UNIFORM
Runoff Coefficient	=	0.00	0.00	FLOW	CAPACITY
Rational Flow (cfs)	=	0.00	0.00	(cfs)	(cfs)
Known Flow (cfs)	=	47.10	47.10	47.10	53.99

Note: Upstream surcharge (ft) = 0.13

STORM SEWER INLET REPORT

FLOW RESULTS (cfs)

Flow from Catchment	=	0.00	PONDING WIDTH (ft)	=	0.00
Carryover from previous inlet	=	0.00	DEPTH AT CURB (ft)	=	0.00
Total flow to current inlet	=	0.00	EFFICIENCY (%)		
Intercepted by current inlet	=	0.00	Curb = *		
Bypassed by current inlet	=	0.00	Grate = *	Total =	-inf
			Slot = *		

INPUT PARAMETERS:

Inlet Type	= NONE IN SAG		Longitudinal Slope (ft/ft)	=	0.000
Gutter Width (ft)	=	0.000	Pavement Cross Slope (ft/ft)	=	0.000
Inlet n-value	=	0.016	Normal Gutter XSlope (ft/ft)	=	0.000
Downstream Inlet number	=	7	Gutter depression (in)	=	0.00

MAIN SD1 100YR STM/10YR TW

Data File : D1E10010.STM Return Period: 100 Yrs

Rainfall file: PHX1.RND I = 87.730/ (Tc + 10.500) ^ 0.850

LINE 9 STORM SEWER HYDRAULIC REPORT

Diameter (in) = 42 N = 0.012 Critical Depth (in) = 25.21

Length (ft) = 217 Kj (JLC) = 1.0 Downstream Line # = 8

	INVERT (ft)	DEPTH (in)	HGL (ft)	EGL (ft)	CROWN (ft)	NAT GND (ft)	AREA (ft^2)	VEL (ft/s)
UPSTREAM	1119.99	42.00	1123.87	1124.24	1123.49	1129.10	9.62	4.90
DNSTREAM	1119.45	42.00	1123.46	1123.83	1122.95	1127.30	9.62	4.90
SLOPE(%)	0.249		0.187	0.187		0.829		

		CATCHMENT	CUMULATIVE		
Area (ac)	=	0.0	0.0		
Drainage Time (min)	=	0.00	9.04		
Intensity (in/h)	=	0.00	7.01	TOTAL	UNIFORM
Runoff Coefficient	=	0.00	0.00	FLOW	CAPACITY
Rational Flow (cfs)	=	0.00	0.00	(cfs)	(cfs)
Known Flow (cfs)	=	47.10	47.10	47.10	54.37

Note: Upstream surcharge (ft) = 0.38

STORM SEWER INLET REPORT

FLOW RESULTS (cfs)

Flow from Catchment	=	0.00	PONDING WIDTH (ft)	=	0.00
Carryover from previous inlet	=	0.00	DEPTH AT CURB (ft)	=	0.00
Total flow to current inlet	=	0.00	EFFICIENCY (%)		
Intercepted by current inlet	=	0.00	Curb = *		
Bypassed by current inlet	=	0.00	Grate = *	Total =	-inf
			Slot = *		

INPUT PARAMETERS:

Inlet Type	= NONE IN SAG		Longitudinal Slope (ft/ft)	=	0.000
Gutter Width (ft)	=	0.000	Pavement Cross Slope (ft/ft)	=	0.000
Inlet n-value	=	0.016	Normal Gutter XSlope (ft/ft)	=	0.000
Downstream Inlet number	=	7	Gutter depression (in)	=	0.00

MAIN SD1 100YR STM/10YR TW

Data File : D1E10010.STM Return Period: 100 Yrs

Rainfall file: PHX1.RND I = 87.730/ (Tc + 10.500) ^ 0.850

LINE 10 STORM SEWER HYDRAULIC REPORT

Diameter (in) = 42 N = 0.012 Critical Depth (in) = 21.67

Length (ft) = 60 Kj (JLC) = 0.9 Downstream Line # = 9

	INVERT (ft)	DEPTH (in)	HGL (ft)	EGL (ft)	CROWN (ft)	NAT GND (ft)	AREA (ft^2)	VEL (ft/s)
UPSTREAM	1120.14	42.00	1124.25	1124.45	1123.64	1129.00	9.62	3.62
DNSTREAM	1120.00	42.00	1124.19	1124.39	1123.50	1129.10	9.62	3.62
SLOPE(%)	0.233		0.102	0.102		-0.167		

		CATCHMENT	CUMULATIVE		
Area (ac)	=	0.0	0.0		
Drainage Time (min)	=	0.00	8.76		
Intensity (in/h)	=	0.00	7.10	TOTAL	UNIFORM
Runoff Coefficient	=	0.00	0.00	FLOW	CAPACITY
Rational Flow (cfs)	=	0.00	0.00	(cfs)	(cfs)
Known Flow (cfs)	=	34.80	34.80	34.80	52.65

Note: Upstream surcharge (ft) = 0.61

STORM SEWER INLET REPORT

FLOW RESULTS (cfs)

Flow from Catchment	=	0.00	PONDING WIDTH (ft)	=	0.00
Carryover from previous inlet	=	0.00	DEPTH AT CURB (ft)	=	0.00
Total flow to current inlet	=	0.00	EFFICIENCY (%)		
Intercepted by current inlet	=	0.00	Curb = *		
Bypassed by current inlet	=	0.00	Grate = *	Total =	-inf
			Slot = *		

INPUT PARAMETERS:

Inlet Type	= NONE IN SAG		Longitudinal Slope (ft/ft)	=	0.000
Gutter Width (ft)	=	0.000	Pavement Cross Slope (ft/ft)	=	0.000
Inlet n-value	=	0.016	Normal Gutter XSlope (ft/ft)	=	0.000
Downstream Inlet number	=	8	Gutter depression (in)	=	0.00

MAIN SD1 100YR STM/10YR TW

Data File : D1E10010.STM Return Period: 100 Yrs

Rainfall file: PHX1.RND I = 87.730/ (Tc + 10.500) ^ 0.850

LINE 11 STORM SEWER HYDRAULIC REPORT

Diameter (in) = 42 N = 0.012 Critical Depth (in) = 20.85

Length (ft) = 162 Kj (JLC) = 0.0 Downstream Line # = 10

	INVERT (ft)	DEPTH (in)	HGL (ft)	EGL (ft)	CROWN (ft)	NAT GND (ft)	AREA (ft^2)	VEL (ft/s)
UPSTREAM	1120.54	42.00	1124.40	1124.57	1124.04	1129.00	9.62	3.35
DNSTREAM	1120.15	42.00	1124.26	1124.43	1123.65	1129.00	9.62	3.35
SLOPE(%)	0.241		0.087	0.087		0.000		

		CATCHMENT	CUMULATIVE		
Area (ac)	=	0.0	0.0		
Drainage Time (min)	=	0.00	7.95		
Intensity (in/h)	=	0.00	7.36	TOTAL	UNIFORM
Runoff Coefficient	=	0.00	0.00	FLOW	CAPACITY
Rational Flow (cfs)	=	0.00	0.00	(cfs)	(cfs)
Known Flow (cfs)	=	32.20	32.20	32.20	53.48

Note: Upstream surcharge (ft) = 0.36

STORM SEWER INLET REPORT

FLOW RESULTS (cfs)

Flow from Catchment	=	0.00	PONDING WIDTH (ft)	=	0.00
Carryover from previous inlet	=	0.00	DEPTH AT CURB (ft)	=	0.00
Total flow to current inlet	=	0.00	EFFICIENCY (%)		
Intercepted by current inlet	=	0.00	Curb = *		
Bypassed by current inlet	=	0.00	Grate = *	Total =	-inf
			Slot = *		

INPUT PARAMETERS:

Inlet Type	= NONE IN SAG		Longitudinal Slope (ft/ft)	=	0.000
Gutter Width (ft)	=	0.000	Pavement Cross Slope (ft/ft)	=	0.000
Inlet n-value	=	0.016	Normal Gutter XSlope (ft/ft)	=	0.000
Downstream Inlet number	=	10	Gutter depression (in)	=	0.00

MAIN SD1 100YR STM/10YR TW

Data File : D1E10010.STM Return Period: 100 Yrs

Rainfall file: PHX1.RND I = 87.730/ (Tc + 10.500) ^ 0.850

LINE 12 STORM SEWER HYDRAULIC REPORT

Diameter (in) = 42 N = 0.012 Critical Depth (in) = 20.29

Length (ft) = 136 Kj (JLC) = 0.0 Downstream Line # = 11

	INVERT (ft)	DEPTH (in)	HGL (ft)	EGL (ft)	CROWN (ft)	NAT GND (ft)	AREA (ft^2)	VEL (ft/s)
UPSTREAM	1120.88	42.00	1124.51	1124.67	1124.38	1129.80	9.62	3.17
DNSTREAM	1120.55	42.00	1124.40	1124.56	1124.05	1129.00	9.62	3.17
SLOPE(%)	0.243		0.078	0.078		0.588		

		CATCHMENT	CUMULATIVE		
Area (ac)	=	0.0	0.0		
Drainage Time (min)	=	0.00	7.24		
Intensity (in/h)	=	0.00	7.61	TOTAL	UNIFORM
Runoff Coefficient	=	0.00	0.00	FLOW	CAPACITY
Rational Flow (cfs)	=	0.00	0.00	(cfs)	(cfs)
Known Flow (cfs)	=	30.50	30.50	30.50	53.69

Note: Upstream surcharge (ft) = 0.13

STORM SEWER INLET REPORT

FLOW RESULTS (cfs)

Flow from Catchment	=	0.00	PONDING WIDTH (ft)	=	0.00
Carryover from previous inlet	=	0.00	DEPTH AT CURB (ft)	=	0.00
Total flow to current inlet	=	0.00	EFFICIENCY (%)		
Intercepted by current inlet	=	0.00	Curb = *		
Bypassed by current inlet	=	0.00	Grate = *	Total =	-inf
			Slot = *		

INPUT PARAMETERS:

Inlet Type	= NONE IN SAG		Longitudinal Slope (ft/ft)	=	0.000
Gutter Width (ft)	=	0.000	Pavement Cross Slope (ft/ft)	=	0.000
Inlet n-value	=	0.016	Normal Gutter XSlope (ft/ft)	=	0.000
Downstream Inlet number	=	9	Gutter depression (in)	=	0.00

MAIN SD1 100YR STM/10YR TW

Data File : D1E10010.STM Return Period: 100 Yrs

Rainfall file: PHX1.RND I = 87.730/ (Tc + 10.500) ^ 0.850

LINE 13 STORM SEWER HYDRAULIC REPORT

Diameter (in) = 30 N = 0.012 Critical Depth (in) = 17.93

Length (ft) = 112 Kj (JLC) = 0.0 Downstream Line # = 12

	INVERT (ft)	DEPTH (in)	HGL (ft)	EGL (ft)	CROWN (ft)	NAT GND (ft)	AREA (ft^2)	VEL (ft/s)
UPSTREAM	1121.16	30.00	1124.74	1125.00	1123.66	1130.10	4.91	4.07
DNSTREAM	1120.89	30.00	1124.51	1124.77	1123.39	1129.80	4.91	4.07
SLOPE(%)	0.241		0.203	0.203		0.268		

	CATCHMENT	CUMULATIVE		
Area (ac) =	0.0	0.0		
Drainage Time (min) =	0.00	6.78		
Intensity (in/h) =	0.00	7.78	TOTAL	UNIFORM
Runoff Coefficient =	0.00	0.00	FLOW	CAPACITY
Rational Flow (cfs) =	0.00	0.00	(cfs)	(cfs)
Known Flow (cfs) =	20.00	20.00	20.00	21.82

Note: Upstream surcharge (ft) = 1.08

STORM SEWER INLET REPORT

FLOW RESULTS (cfs)

Flow from Catchment = 0.00

Carryover from previous inlet = 0.00

Total flow to current inlet = 0.00

Intercepted by current inlet = 0.00

Bypassed by current inlet = 0.00

PONDING WIDTH (ft) = 0.00

DEPTH AT CURB (ft) = 0.00

EFFICIENCY (%)

Curb = *

Grate = * Total = -inf

Slot = *

INPUT PARAMETERS:

Inlet Type = NONE IN SAG

Gutter Width (ft) = 0.000

Inlet n-value = 0.016

Downstream Inlet number = 10

Longitudinal Slope (ft/ft) = 0.000

Pavement Cross Slope (ft/ft) = 0.000

Normal Gutter XSlope (ft/ft) = 0.000

Gutter depression (in) = 0.00

MAIN SD1 100YR STM/10YR TW

Data File : D1E10010.STM Return Period: 100 Yrs

Rainfall file: PHX1.RND I = 87.730/ (Tc + 10.500) ^ 0.850

LINE 14 STORM SEWER HYDRAULIC REPORT

Diameter (in) = 30 N = 0.012 Critical Depth (in) = 17.34

Length (ft) = 346 Kj (JLC) = 0.0 Downstream Line # = 13

	INVERT (ft)	DEPTH (in)	HGL (ft)	EGL (ft)	CROWN (ft)	NAT GND (ft)	AREA (ft^2)	VEL (ft/s)
UPSTREAM	1122.03	30.00	1125.36	1125.59	1124.53	1129.02	4.91	3.81
DNSTREAM	1121.17	30.00	1124.75	1124.97	1123.67	1130.10	4.91	3.81
SLOPE(%)	0.249		0.177	0.177		-0.312		

	CATCHMENT	CUMULATIVE		
Area (ac) =	0.0	0.0		
Drainage Time (min) =	0.00	5.27		
Intensity (in/h) =	0.00	8.41	TOTAL	UNIFORM
Runoff Coefficient =	0.00	0.00	FLOW	CAPACITY
Rational Flow (cfs) =	0.00	0.00	(cfs)	(cfs)
Known Flow (cfs) =	18.70	18.70	18.70	22.15

Note: Upstream surcharge (ft) = 0.83

STORM SEWER INLET REPORT

FLOW RESULTS (cfs)

Flow from Catchment = 0.00

Carryover from previous inlet = 0.00

Total flow to current inlet = 0.00

Intercepted by current inlet = 0.00

Bypassed by current inlet = 0.00

PONDING WIDTH (ft) = 0.00

DEPTH AT CURB (ft) = 0.00

EFFICIENCY (%)

Curb = *

Grate = * Total = -inf

Slot = *

INPUT PARAMETERS:

Inlet Type = NONE IN SAG

Gutter Width (ft) = 0.000

Inlet n-value = 0.016

Downstream Inlet number = 11

Longitudinal Slope (ft/ft) = 0.000

Pavement Cross Slope (ft/ft) = 0.000

Normal Gutter XSlope (ft/ft) = 0.000

Gutter depression (in) = 0.00

Data File : D1E10010.STM Return Period: 100 Yrs
Rainfall file: PHX1.RND I = 87.730/ (Tc + 10.500) ^ 0.850

LINE 15 STORM SEWER HYDRAULIC REPORT

Diameter (in) = 30 N = 0.012 Critical Depth (in) = 16.48
Length (ft) = 280 Kj (JLC) = 0.0 Downstream Line # = 14

	INVERT (ft)	DEPTH (in)	HGL (ft)	EGL (ft)	CROWN (ft)	NAT GND (ft)	AREA (ft^2)	VEL (ft/s)
UPSTREAM	1122.73	30.00	1125.78	1125.96	1125.23	1128.35	4.91	3.44
DNSTREAM	1122.04	30.00	1125.37	1125.56	1124.54	1129.02	4.91	3.44
SLOPE(%)	0.246		0.145	0.145		-0.239		

		CATCHMENT	CUMULATIVE		
Area (ac)	=	0.0	0.0		
Drainage Time (min)	=	0.00	3.91		
Intensity (in/h)	=	0.00	9.08	TOTAL	UNIFORM
Runoff Coefficient	=	0.00	0.00	FLOW	CAPACITY
Rational Flow (cfs)	=	0.00	0.00	(cfs)	(cfs)
Known Flow (cfs)	=	16.90	16.90	16.90	22.05

Note: Upstream surcharge (ft) = 0.55

STORM SEWER INLET REPORT

FLOW RESULTS (cfs)
Flow from Catchment = 0.00
Carryover from previous inlet = 0.00
Total flow to current inlet = 0.00
Intercepted by current inlet = 0.00
Bypassed by current inlet = 0.00

PONDING WIDTH (ft) = 0.00
DEPTH AT CURB (ft) = 0.00
EFFICIENCY (%)
Curb = *
Grate = * Total = -inf
Slot = *

INPUT PARAMETERS:
Inlet Type = NONE IN SAG
Gutter Width (ft) = 0.000
Inlet n-value = 0.016
Downstream Inlet number = 12
Longitudinal Slope (ft/ft) = 0.000
Pavement Cross Slope (ft/ft) = 0.000
Normal Gutter XSlope (ft/ft) = 0.000
Gutter depression (in) = 0.00

MAIN SD1 100YR STM/10YR TW

Data File : D1E10010.STM Return Period: 100 Yrs

Rainfall file: PHX1.RND I = 87.730/ (Tc + 10.500) ^ 0.850

LINE 16 STORM SEWER HYDRAULIC REPORT

Diameter (in) = 24 N = 0.012 Critical Depth (in) = 14.28

Length (ft) = 239 Kj (JLC) = 0.0 Downstream Line # = 15

	INVERT (ft)	DEPTH (in)	HGL (ft)	EGL (ft)	CROWN (ft)	NAT GND (ft)	AREA (ft^2)	VEL (ft/s)
UPSTREAM	1123.35	24.00	1126.29	1126.49	1125.35	1128.71	3.14	3.60
DNSTREAM	1122.74	24.00	1125.78	1125.98	1124.74	1128.35	3.14	3.60
SLOPE(%)	0.255		0.213	0.213		0.151		

		CATCHMENT	CUMULATIVE		
Area (ac)	=	0.0	0.0		
Drainage Time (min)	=	0.00	2.80		
Intensity (in/h)	=	0.00	9.72	TOTAL	UNIFORM
Runoff Coefficient	=	0.00	0.00	FLOW	CAPACITY
Rational Flow (cfs)	=	0.00	0.00	(cfs)	(cfs)
Known Flow (cfs)	=	11.30	11.30	11.30	12.38

Note: Upstream surcharge (ft) = 0.94

STORM SEWER INLET REPORT

FLOW RESULTS (cfs)

Flow from Catchment	=	0.00	PONDING WIDTH (ft)	=	0.00
Carryover from previous inlet	=	0.00	DEPTH AT CURB (ft)	=	0.00
Total flow to current inlet	=	0.00	EFFICIENCY (%)		
Intercepted by current inlet	=	0.00	Curb = *		
Bypassed by current inlet	=	0.00	Grate = *	Total =	-inf
			Slot = *		

INPUT PARAMETERS:

Inlet Type	= NONE IN SAG		Longitudinal Slope (ft/ft)	=	0.000
Gutter Width (ft)	=	0.000	Pavement Cross Slope (ft/ft)	=	0.000
Inlet n-value	=	0.016	Normal Gutter XSlope (ft/ft)	=	0.000
Downstream Inlet number	=	13	Gutter depression (in)	=	0.00

MAIN SD1 100YR STM/10YR TW

Data File : D1E10010.STM Return Period: 100 Yrs

Rainfall file: PHX1.RND I = 87.730/ (Tc + 10.500) ^ 0.850

LINE 17 STORM SEWER HYDRAULIC REPORT

Diameter (in) = 24 N = 0.024 Critical Depth (in) = 12.31

Length (ft) = 32 Kj (JLC) = 1.4 Downstream Line # = 16

	INVERT (ft)	DEPTH (in)	HGL (ft)	EGL (ft)	CROWN (ft)	NAT GND (ft)	AREA (ft^2)	VEL (ft/s)
UPSTREAM	1123.49	24.00	1126.73	1126.84	1125.49	1128.71	3.14	2.67
DNSTREAM	1123.39	24.00	1126.58	1126.69	1125.39	1128.71	3.14	2.67
SLOPE(%)	0.312		0.470	0.470		0.000		

	CATCHMENT	CUMULATIVE		
Area (ac) =	0.0	0.0		
Drainage Time (min) =	0.00	2.61		
Intensity (in/h) =	0.00	9.85	TOTAL	UNIFORM
Runoff Coefficient =	0.00	0.00	FLOW	CAPACITY
Rational Flow (cfs) =	0.00	0.00	(cfs)	(cfs)
Known Flow (cfs) =	8.40	8.40	8.40	6.85

Note: Upstream surcharge (ft) = 1.24

STORM SEWER INLET REPORT

FLOW RESULTS (cfs)

Flow from Catchment	= 0.00	PONDING WIDTH (ft)	= 0.00
Carryover from previous inlet	= 0.00	DEPTH AT CURB (ft)	= 0.00
Total flow to current inlet	= 0.00	EFFICIENCY (%)	
Intercepted by current inlet	= 0.00	Curb = *	
Bypassed by current inlet	= 0.00	Grate = *	Total = -inf
		Slot = *	

INPUT PARAMETERS:

Inlet Type	= NONE IN SAG	Longitudinal Slope (ft/ft)	= 0.000
Gutter Width (ft)	= 0.000	Pavement Cross Slope (ft/ft)	= 0.000
Inlet n-value	= 0.016	Normal Gutter XSlope (ft/ft)	= 0.000
Downstream Inlet number	= 14	Gutter depression (in)	= 0.00

MAIN SD1 100YR STM/10YR TW

Data File : D1E10010.STM Return Period: 100 Yrs
Rainfall file: PHX1.RND I = 87.730/ (Tc + 10.500) ^ 0.850

LINE 18 STORM SEWER HYDRAULIC REPORT

Diameter (in) = 24 N = 0.012 Critical Depth (in) = 8.81
Length (ft) = 118 Kj (JLC) = 0.4 Downstream Line # = 17

	INVERT (ft)	DEPTH (in)	HGL (ft)	EGL (ft)	CROWN (ft)	NAT GND (ft)	AREA (ft^2)	VEL (ft/s)
UPSTREAM	1123.92	24.00	1126.82	1126.85	1125.92	1126.52	3.14	1.37
DNSTREAM	1123.49	24.00	1126.78	1126.81	1125.49	1128.71	3.14	1.37
SLOPE(%)	0.364		0.031	0.031		-1.856		

		CATCHMENT	CUMULATIVE		
Area (ac)	=	0.0	0.0		
Drainage Time (min)	=	0.00	1.17		
Intensity (in/h)	=	0.00	10.87	TOTAL	UNIFORM
Runoff Coefficient	=	0.00	0.00	FLOW	CAPACITY
Rational Flow (cfs)	=	0.00	0.00	(cfs)	(cfs)
Known Flow (cfs)	=	4.30	4.30	4.30	14.79

Note: Upstream surcharge (ft) = 0.90

STORM SEWER INLET REPORT

FLOW RESULTS (cfs)
Flow from Catchment = 0.00
Carryover from previous inlet = 0.00
Total flow to current inlet = 0.00
Intercepted by current inlet = 0.00
Bypassed by current inlet = 0.00

PONDING WIDTH (ft) = 0.00
DEPTH AT CURB (ft) = 0.00
EFFICIENCY (%)
Curb = *
Grate = * Total = -inf
Slot = *

INPUT PARAMETERS:
Inlet Type = NONE IN SAG
Gutter Width (ft) = 0.000
Inlet n-value = 0.016
Downstream Inlet number = 15
Longitudinal Slope (ft/ft) = 0.000
Pavement Cross Slope (ft/ft) = 0.000
Normal Gutter XSlope (ft/ft) = 0.000
Gutter depression (in) = 0.00

MAIN SD1 100YR STM/10YR TW

Data File : D1E10010.STM Return Period: 100 Yrs

Rainfall file: PHX1.RND I = 87.730/ (Tc + 10.500) ^ 0.850

LINE 19 STORM SEWER HYDRAULIC REPORT

Diameter (in) = 24 N = 0.024 Critical Depth (in) = 4.84

Length (ft) = 29 Kj (JLC) = 0.0 Downstream Line # = 18

	INVERT (ft)	DEPTH (in)	HGL (ft)	EGL (ft)	CROWN (ft)	NAT GND (ft)	AREA (ft^2)	VEL (ft/s)
UPSTREAM	1124.01	24.00	1126.82	1126.83	1126.01	1126.52	3.14	0.41
DNSTREAM	1123.92	24.00	1126.82	1126.82	1125.92	1126.52	3.14	0.41
SLOPE(%)	0.310		0.011	0.011		0.000		

	CATCHMENT	CUMULATIVE		
Area (ac) =	0.0	0.0		
Drainage Time (min) =	0.00	0.00		
Intensity (in/h) =	0.00	11.89	TOTAL	UNIFORM
Runoff Coefficient =	0.00	0.00	FLOW	CAPACITY
Rational Flow (cfs) =	0.00	0.00	(cfs)	(cfs)
Known Flow (cfs) =	1.30	1.30	1.30	6.82

Note: Upstream surcharge (ft) = 0.81

STORM SEWER INLET REPORT

FLOW RESULTS (cfs)

Flow from Catchment	= 0.00	PONDING WIDTH (ft)	= 0.00
Carryover from previous inlet	= 0.00	DEPTH AT CURB (ft)	= 0.00
Total flow to current inlet	= 0.00	EFFICIENCY (%)	
Intercepted by current inlet	= 0.00	Curb = *	
Bypassed by current inlet	= 0.00	Grate = *	Total = -inf
		Slot = *	

INPUT PARAMETERS:

Inlet Type	= NONE IN SAG	Longitudinal Slope (ft/ft)	= 0.000
Gutter Width (ft)	= 0.000	Pavement Cross Slope (ft/ft)	= 0.000
Inlet n-value	= 0.016	Normal Gutter XSlope (ft/ft)	= 0.000
Downstream Inlet number	= 16	Gutter depression (in)	= 0.00

MAIN SD1 100YR STM/10YR TW

Data File : D1E10010.STM Return Period: 100 Yrs

Rainfall file: PHX1.RND I = 87.730/ (Tc + 10.500) ^ 0.850

LINE 20 STORM SEWER HYDRAULIC REPORT

Diameter (in) = 24 N = 0.012 Critical Depth (in) = 4.84

Length (ft) = 0 Kj (JLC) = 1.0 Downstream Line # = 19

	INVERT (ft)	DEPTH (in)	HGL (ft)	EGL (ft)	CROWN (ft)	NAT GND (ft)	AREA (ft^2)	VEL (ft/s)
UPSTREAM	1124.02	24.00	1126.83	1126.83	1126.02	1126.52	3.14	0.41
DNSTREAM	1124.02	24.00	1126.83	1126.83	1126.02	1126.52	3.14	0.41
SLOPE(%)	0.000		28.076	28.076		0.000		

	CATCHMENT	CUMULATIVE		
Area (ac) =	0.0	0.0		
Drainage Time (min) =	0.00	0.00		
Intensity (in/h) =	0.00	11.89	TOTAL	UNIFORM
Runoff Coefficient =	0.00	0.00	FLOW	CAPACITY
Rational Flow (cfs) =	0.00	0.00	(cfs)	(cfs)
Known Flow (cfs) =	1.30	1.30	1.30	0.00

Note: Upstream surcharge (ft) = 0.81

STORM SEWER INLET REPORT

FLOW RESULTS (cfs)

Flow from Catchment =	0.00	PONDING WIDTH (ft) =	0.00
Carryover from previous inlet =	0.00	DEPTH AT CURB (ft) =	0.00
Total flow to current inlet =	0.00	EFFICIENCY (%)	
Intercepted by current inlet =	0.00	Curb = *	
Bypassed by current inlet =	0.00	Grate = *	Total = -inf
		Slot = *	

INPUT PARAMETERS:

Inlet Type	= NONE IN SAG	Longitudinal Slope (ft/ft) =	0.000
Gutter Width (ft) =	0.000	Pavement Cross Slope (ft/ft) =	0.000
Inlet n-value =	0.016	Normal Gutter XSlope (ft/ft) =	0.000
Downstream Inlet number =	19	Gutter depression (in) =	0.00

MAIN SD1 100YR STM/10YR TW

Data File : D1E10010.STM Return Period: 100 Yrs

Rainfall file: PHX1.RND I = 87.730/ (Tc + 10.500) ^ 0.850

LINE 21 STORM SEWER HYDRAULIC REPORT

Diameter (in) = 24 N = 0.024 Critical Depth (in) = 13.65

Length (ft) = 64 Kj (JLC) = 1.3 Downstream Line # = 2

	INVERT (ft)	DEPTH (in)	HGL (ft)	EGL (ft)	CROWN (ft)	NAT GND (ft)	AREA (ft^2)	VEL (ft/s)
UPSTREAM	1136.76	13.65	1137.90	1138.38	1138.76	1142.26	1.84	5.59
DNSTREAM	1115.50	24.00	1121.78	1121.95	1117.50	1123.20	3.14	3.28
SLOPE(%)	35.219		25.177	25.675		29.781		

		CATCHMENT	CUMULATIVE		
Area (ac)	=	0.0	0.0		
Drainage Time (min)	=	0.00	0.26		
Intensity (in/h)	=	0.00	11.64	TOTAL	UNIFORM
Runoff Coefficient	=	0.00	0.00	FLOW	CAPACITY
Rational Flow (cfs)	=	0.00	0.00	(cfs)	(cfs)
Known Flow (cfs)	=	10.32	10.32	10.32	72.71

Note: Transitional flow exists in this line

STORM SEWER INLET REPORT

FLOW RESULTS (cfs)

Flow from Catchment	=	0.00	PONDING WIDTH (ft)	=	0.00
Carryover from previous inlet	=	0.00	DEPTH AT CURB (ft)	=	0.00
Total flow to current inlet	=	0.00	EFFICIENCY (%)		
Intercepted by current inlet	=	0.00	Curb = *		
Bypassed by current inlet	=	0.00	Grate = *	Total =	-inf
			Slot = *		

INPUT PARAMETERS:

Inlet Type	=	NONE IN SAG	Longitudinal Slope (ft/ft)	=	0.000
Gutter Width (ft)	=	0.000	Pavement Cross Slope (ft/ft)	=	0.000
Inlet n-value	=	0.016	Normal Gutter XSlope (ft/ft)	=	0.000
Downstream Inlet number	=	20	Gutter depression (in)	=	0.00

MAIN SD1 100YR STM/10YR TW

Data File : D1E10010.STM Return Period: 100 Yrs

Rainfall file: PHX1.RND I = 87.730/ (Tc + 10.500) ^ 0.850

LINE 22 STORM SEWER HYDRAULIC REPORT

Diameter (in) = 24 N = 0.012 Critical Depth (in) = 9.80

Length (ft) = 59 Kj (JLC) = 0.0 Downstream Line # = 21

	INVERT (ft)	DEPTH (in)	HGL (ft)	EGL (ft)	CROWN (ft)	NAT GND (ft)	AREA (ft^2)	VEL (ft/s)
UPSTREAM	1137.42	9.80	1138.25	1138.55	1139.42	1142.92	1.21	4.41
DNSTREAM	1136.86	12.68	1137.92	1138.07	1138.86	1142.26	1.68	3.16
SLOPE(%)	0.949		0.563	0.812		1.119		

		CATCHMENT	CUMULATIVE		
Area (ac)	=	0.0	0.0		
Drainage Time (min)	=	0.00	0.00		
Intensity (in/h)	=	0.00	11.89	TOTAL	UNIFORM
Runoff Coefficient	=	0.00	0.00	FLOW	CAPACITY
Rational Flow (cfs)	=	0.00	0.00	(cfs)	(cfs)
Known Flow (cfs)	=	5.32	5.32	5.32	23.87

STORM SEWER INLET REPORT

FLOW RESULTS (cfs)

Flow from Catchment	=	0.00	PONDING WIDTH (ft)	=	0.00
Carryover from previous inlet	=	0.00	DEPTH AT CURB (ft)	=	0.00
Total flow to current inlet	=	0.00	EFFICIENCY (%)		
Intercepted by current inlet	=	0.00	Curb = *		
Bypassed by current inlet	=	0.00	Grate = *	Total =	-inf
			Slot = *		

INPUT PARAMETERS:

Inlet Type	= NONE IN SAG		Longitudinal Slope (ft/ft)	=	0.000
Gutter Width (ft)	=	0.000	Pavement Cross Slope (ft/ft)	=	0.000
Inlet n-value	=	0.016	Normal Gutter XSlope (ft/ft)	=	0.000
Downstream Inlet number	=	21	Gutter depression (in)	=	0.00

MAIN SD1 100YR STM/10YR TW

Data File : D1E10010.STM Return Period: 100 Yrs

Rainfall file: PHX1.RND I = 87.730/ (Tc + 10.500) ^ 0.850

LINE 23 STORM SEWER HYDRAULIC REPORT

Diameter (in) = 24 N = 0.024 Critical Depth (in) = 13.51

Length (ft) = 40 Kj (JLC) = 1.3 Downstream Line # = 3

	INVERT (ft)	DEPTH (in)	HGL (ft)	EGL (ft)	CROWN (ft)	NAT GND (ft)	AREA (ft²)	VEL (ft/s)
UPSTREAM	1133.03	13.51	1134.16	1134.63	1135.03	1138.53	1.82	5.55
DNSTREAM	1116.67	24.00	1122.18	1122.34	1118.67	1124.15	3.14	3.22
SLOPE(%)	44.820		29.940	30.734		35.950		

		CATCHMENT	CUMULATIVE		
Area (ac)	=	0.0	0.0		
Drainage Time (min)	=	0.00	0.26		
Intensity (in/h)	=	0.00	11.64	TOTAL	UNIFORM
Runoff Coefficient	=	0.00	0.00	FLOW	CAPACITY
Rational Flow (cfs)	=	0.00	0.00	(cfs)	(cfs)
Known Flow (cfs)	=	10.11	10.11	10.11	82.02

Note: Transitional flow exists in this line

STORM SEWER INLET REPORT

FLOW RESULTS (cfs)

Flow from Catchment	=	0.00	PONDING WIDTH (ft)	=	0.00
Carryover from previous inlet	=	0.00	DEPTH AT CURB (ft)	=	0.00
Total flow to current inlet	=	0.00	EFFICIENCY (%)		
Intercepted by current inlet	=	0.00	Curb = *		
Bypassed by current inlet	=	0.00	Grate = *	Total =	-inf
			Slot = *		

INPUT PARAMETERS:

Inlet Type	=	NONE IN SAG	Longitudinal Slope (ft/ft)	=	0.000
Gutter Width (ft)	=	0.000	Pavement Cross Slope (ft/ft)	=	0.000
Inlet n-value	=	0.016	Normal Gutter XSlope (ft/ft)	=	0.000
Downstream Inlet number	=	22	Gutter depression (in)	=	0.00

MAIN SD1 100YR STM/10YR TW

Data File : D1E10010.STM Return Period: 100 Yrs

Rainfall file: PHX1.RND I = 87.730/ (Tc + 10.500) ^ 0.850

LINE 24 STORM SEWER HYDRAULIC REPORT

Diameter (in) = 24 N = 0.012 Critical Depth (in) = 9.62

Length (ft) = 59 Kj (JLC) = 0.0 Downstream Line # = 23

	INVERT (ft)	DEPTH (in)	HGL (ft)	EGL (ft)	CROWN (ft)	NAT GND (ft)	AREA (ft^2)	VEL (ft/s)
UPSTREAM	1133.74	9.62	1134.55	1134.85	1135.74	1139.24	1.18	4.36
DNSTREAM	1133.13	12.54	1134.18	1134.32	1135.13	1138.53	1.66	3.09
SLOPE(%)	1.034		0.642	0.891		1.203		

		CATCHMENT	CUMULATIVE		
Area (ac)	=	0.0	0.0		
Drainage Time (min)	=	0.00	0.00		
Intensity (in/h)	=	0.00	11.89	TOTAL	UNIFORM
Runoff Coefficient	=	0.00	0.00	FLOW	CAPACITY
Rational Flow (cfs)	=	0.00	0.00	(cfs)	(cfs)
Known Flow (cfs)	=	5.13	5.13	5.13	24.91

STORM SEWER INLET REPORT

FLOW RESULTS (cfs)

Flow from Catchment	=	0.00	PONDING WIDTH (ft)	=	0.00
Carryover from previous inlet	=	0.00	DEPTH AT CURB (ft)	=	0.00
Total flow to current inlet	=	0.00	EFFICIENCY (%)		
Intercepted by current inlet	=	0.00	Curb = *		
Bypassed by current inlet	=	0.00	Grate = *	Total =	-inf
			Slot = *		

INPUT PARAMETERS:

Inlet Type	= NONE IN SAG		Longitudinal Slope (ft/ft)	=	0.000
Gutter Width (ft)	=	0.000	Pavement Cross Slope (ft/ft)	=	0.000
Inlet n-value	=	0.016	Normal Gutter XSlope (ft/ft)	=	0.000
Downstream Inlet number	=	23	Gutter depression (in)	=	0.00

MAIN SD1 100YR STM/10YR TW

Data File : D1E10010.STM Return Period: 100 Yrs

Rainfall file: PHX1.RND I = 87.730/ (Tc + 10.500) ^ 0.850

LINE 25 STORM SEWER HYDRAULIC REPORT

Diameter (in) = 24 N = 0.024 Critical Depth (in) = 6.92

Length (ft) = 39 Kj (JLC) = 1.3 Downstream Line # = 4

	INVERT (ft)	DEPTH (in)	HGL (ft)	EGL (ft)	CROWN (ft)	NAT GND (ft)	AREA (ft^2)	VEL (ft/s)
UPSTREAM	1130.95	6.92	1131.78	1131.97	1132.95	1136.45	0.75	3.54
DNSTREAM	1117.45	24.00	1122.34	1122.35	1119.45	1125.40	3.14	0.84
SLOPE(%)	36.896		24.194	24.664		28.333		

		CATCHMENT	CUMULATIVE		
Area (ac)	=	0.0	0.0		
Drainage Time (min)	=	0.00	0.00		
Intensity (in/h)	=	0.00	11.89	TOTAL	UNIFORM
Runoff Coefficient	=	0.00	0.00	FLOW	CAPACITY
Rational Flow (cfs)	=	0.00	0.00	(cfs)	(cfs)
Known Flow (cfs)	=	2.65	2.65	2.65	74.42

Note: Transitional flow exists in this line

STORM SEWER INLET REPORT

FLOW RESULTS (cfs)

Flow from Catchment	=	0.00	PONDING WIDTH (ft)	=	0.00	
Carryover from previous inlet	=	0.00	DEPTH AT CURB (ft)	=	0.00	
Total flow to current inlet	=	0.00	EFFICIENCY (%)			
Intercepted by current inlet	=	0.00	Curb =	*		
Bypassed by current inlet	=	0.00	Grate =	*	Total =	-inf
			Slot =	*		

INPUT PARAMETERS:

Inlet Type	= NONE IN SAG		Longitudinal Slope (ft/ft)	=	0.000
Gutter Width (ft)	=	0.000	Pavement Cross Slope (ft/ft)	=	0.000
Inlet n-value	=	0.016	Normal Gutter XSlope (ft/ft)	=	0.000
Downstream Inlet number	=	24	Gutter depression (in)	=	0.00

MAIN SD1 100YR STM/10YR TW

Data File : D1E10010.STM Return Period: 100 Yrs

Rainfall file: PHX1.RND I = 87.730/ (Tc + 10.500) ^ 0.850

LINE 26 STORM SEWER HYDRAULIC REPORT

Diameter (in) = 24 N = 0.024 Critical Depth (in) = 10.21

Length (ft) = 29 Kj (JLC) = 1.3 Downstream Line # = 5

	INVERT (ft)	DEPTH (in)	HGL (ft)	EGL (ft)	CROWN (ft)	NAT GND (ft)	AREA (ft^2)	VEL (ft/s)
UPSTREAM	1125.76	10.21	1126.61	1126.93	1127.76	1136.38	1.27	4.54
DNSTREAM	1117.70	24.00	1122.50	1122.55	1119.70	1125.45	3.14	1.84
SLOPE(%)	28.933		14.172	15.092		37.690		

		CATCHMENT	CUMULATIVE		
Area (ac)	=	0.0	0.0		
Drainage Time (min)	=	0.00	0.70		
Intensity (in/h)	=	0.00	11.25	TOTAL	UNIFORM
Runoff Coefficient	=	0.00	0.00	FLOW	CAPACITY
Rational Flow (cfs)	=	0.00	0.00	(cfs)	(cfs)
Known Flow (cfs)	=	5.78	5.78	5.78	65.90

Note: Transitional flow exists in this line

STORM SEWER INLET REPORT

FLOW RESULTS (cfs)

Flow from Catchment	=	0.00	PONDING WIDTH (ft)	=	0.00
Carryover from previous inlet	=	0.00	DEPTH AT CURB (ft)	=	0.00
Total flow to current inlet	=	0.00	EFFICIENCY (%)		
Intercepted by current inlet	=	0.00	Curb = *		
Bypassed by current inlet	=	0.00	Grate = *	Total =	-inf
			Slot = *		

INPUT PARAMETERS:

Inlet Type	= NONE IN SAG		Longitudinal Slope (ft/ft)	=	0.000
Gutter Width (ft)	=	0.000	Pavement Cross Slope (ft/ft)	=	0.000
Inlet n-value	=	0.016	Normal Gutter XSlope (ft/ft)	=	0.000
Downstream Inlet number	=	24	Gutter depression (in)	=	0.00

MAIN SD1 100YR STM/10YR TW

Data File : D1E10010.STM Return Period: 100 Yrs

Rainfall file: PHX1.RND I = 87.730/ (Tc + 10.500) ^ 0.850

LINE 27 STORM SEWER HYDRAULIC REPORT

Diameter (in) = 24 N = 0.024 Critical Depth (in) = 10.21

Length (ft) = 139 Kj (JLC) = 0.0 Downstream Line # = 26

	INVERT (ft)	DEPTH (in)	HGL (ft)	EGL (ft)	CROWN (ft)	NAT GND (ft)	AREA (ft^2)	VEL (ft/s)
UPSTREAM	1126.46	19.17	1128.06	1128.13	1128.46	1131.96	2.69	2.15
DNSTREAM	1125.76	10.37	1126.62	1126.93	1127.76	1136.38	1.30	4.45
SLOPE(%)	0.504		1.033	0.864		-3.180		

		CATCHMENT	CUMULATIVE		
Area (ac)	=	0.0	0.0		
Drainage Time (min)	=	0.00	0.00		
Intensity (in/h)	=	0.00	11.89	TOTAL	UNIFORM
Runoff Coefficient	=	0.00	0.00	FLOW	CAPACITY
Rational Flow (cfs)	=	0.00	0.00	(cfs)	(cfs)
Known Flow (cfs)	=	5.78	5.78	5.78	8.69

STORM SEWER INLET REPORT

FLOW RESULTS (cfs)

Flow from Catchment	=	0.00	PONDING WIDTH (ft)	=	0.00
Carryover from previous inlet	=	0.00	DEPTH AT CURB (ft)	=	0.00
Total flow to current inlet	=	0.00	EFFICIENCY (%)		
Intercepted by current inlet	=	0.00	Curb = *		
Bypassed by current inlet	=	0.00	Grate = *	Total =	-inf
			Slot = *		

INPUT PARAMETERS:

Inlet Type	=	NONE IN SAG	Longitudinal Slope (ft/ft)	=	0.000
Gutter Width (ft)	=	0.000	Pavement Cross Slope (ft/ft)	=	0.000
Inlet n-value	=	0.016	Normal Gutter XSlope (ft/ft)	=	0.000
Downstream Inlet number	=	25	Gutter depression (in)	=	0.00

MAIN SD1 100YR STM/10YR TW

Data File : D1E10010.STM Return Period: 100 Yrs

Rainfall file: PHX1.RND I = 87.730/ (Tc + 10.500) ^ 0.850

LINE 28 STORM SEWER HYDRAULIC REPORT

Diameter (in) = 24 N = 0.012 Critical Depth (in) = 19.55

Length (ft) = 97 Kj (JLC) = 1.3 Downstream Line # = 7

	INVERT (ft)	DEPTH (in)	HGL (ft)	EGL (ft)	CROWN (ft)	NAT GND (ft)	AREA (ft^2)	VEL (ft/s)
UPSTREAM	1120.73	24.00	1123.61	1124.31	1122.73	1129.55	3.14	6.74
DNSTREAM	1118.14	24.00	1122.88	1123.59	1120.14	1128.00	3.14	6.74
SLOPE(%)	2.671		0.747	0.747		1.598		

		CATCHMENT	CUMULATIVE		
Area (ac)	=	0.0	0.0		
Drainage Time (min)	=	0.00	0.46		
Intensity (in/h)	=	0.00	11.46	TOTAL	UNIFORM
Runoff Coefficient	=	0.00	0.00	FLOW	CAPACITY
Rational Flow (cfs)	=	0.00	0.00	(cfs)	(cfs)
Known Flow (cfs)	=	21.17	21.17	21.17	40.05

Note: Upstream surcharge (ft) = 0.88

STORM SEWER INLET REPORT

FLOW RESULTS (cfs)

Flow from Catchment	=	0.00	PONDING WIDTH (ft)	=	0.00
Carryover from previous inlet	=	0.00	DEPTH AT CURB (ft)	=	0.00
Total flow to current inlet	=	0.00	EFFICIENCY (%)		
Intercepted by current inlet	=	0.00	Curb = *		
Bypassed by current inlet	=	0.00	Grate = *	Total =	-inf
			Slot = *		

INPUT PARAMETERS:

Inlet Type	= NONE IN SAG		Longitudinal Slope (ft/ft)	=	0.000
Gutter Width (ft)	=	0.000	Pavement Cross Slope (ft/ft)	=	0.000
Inlet n-value	=	0.016	Normal Gutter XSlope (ft/ft)	=	0.000
Downstream Inlet number	=	26	Gutter depression (in)	=	0.00

MAIN SD1 100YR STM/10YR TW

Data File : D1E10010.STM Return Period: 100 Yrs

Rainfall file: PHX1.RND I = 87.730/ (Tc + 10.500) ^ 0.850

LINE 29 STORM SEWER HYDRAULIC REPORT

Diameter (in) = 24 N = 0.012 Critical Depth (in) = 13.92

Length (ft) = 95 Kj (JLC) = 0.0 Downstream Line # = 28

	INVERT (ft)	DEPTH (in)	HGL (ft)	EGL (ft)	CROWN (ft)	NAT GND (ft)	AREA (ft^2)	VEL (ft/s)
UPSTREAM	1121.30	24.00	1123.83	1124.01	1123.30	1126.80	3.14	3.42
DNSTREAM	1120.83	24.00	1123.64	1123.82	1122.83	1129.55	3.14	3.42
SLOPE(%)	0.495		0.200	0.200		-2.895		

		CATCHMENT	CUMULATIVE		
Area (ac)	=	0.0	0.0		
Drainage Time (min)	=	0.00	0.00		
Intensity (in/h)	=	0.00	11.89	TOTAL	UNIFORM
Runoff Coefficient	=	0.00	0.00	FLOW	CAPACITY
Rational Flow (cfs)	=	0.00	0.00	(cfs)	(cfs)
Known Flow (cfs)	=	10.74	10.74	10.74	17.24

Note: Upstream surcharge (ft) = 0.53

STORM SEWER INLET REPORT

FLOW RESULTS (cfs)

Flow from Catchment	=	0.00	PONDING WIDTH (ft)	=	0.00
Carryover from previous inlet	=	0.00	DEPTH AT CURB (ft)	=	0.00
Total flow to current inlet	=	0.00	EFFICIENCY (%)		
Intercepted by current inlet	=	0.00	Curb = *		
Bypassed by current inlet	=	0.00	Grate = *	Total =	-inf
			Slot = *		

INPUT PARAMETERS:

Inlet Type	= NONE IN SAG	Longitudinal Slope (ft/ft)	= 0.000
Gutter Width (ft)	= 0.000	Pavement Cross Slope (ft/ft)	= 0.000
Inlet n-value	= 0.016	Normal Gutter XSlope (ft/ft)	= 0.000
Downstream Inlet number	= 27	Gutter depression (in)	= 0.00

MAIN SD1 100YR STM/10YR TW

Data File : D1E10010.STM Return Period: 100 Yrs

Rainfall file: PHX1.RND I = 87.730/ (Tc + 10.500) ^ 0.850

LINE 30 STORM SEWER HYDRAULIC REPORT

Diameter (in) = 24 N = 0.012 Critical Depth (in) = 12.19

Length (ft) = 160 Kj (JLC) = 1.3 Downstream Line # = 9

	INVERT (ft)	DEPTH (in)	HGL (ft)	EGL (ft)	CROWN (ft)	NAT GND (ft)	AREA (ft^2)	VEL (ft/s)
UPSTREAM	1121.70	24.00	1124.53	1124.64	1123.70	1129.50	3.14	2.62
DNSTREAM	1120.10	24.00	1124.35	1124.46	1122.10	1129.10	3.14	2.62
SLOPE(%)	1.000		0.113	0.113		0.250		

		CATCHMENT	CUMULATIVE		
Area (ac)	=	0.0	0.0		
Drainage Time (min)	=	0.00	0.76		
Intensity (in/h)	=	0.00	11.20	TOTAL	UNIFORM
Runoff Coefficient	=	0.00	0.00	FLOW	CAPACITY
Rational Flow (cfs)	=	0.00	0.00	(cfs)	(cfs)
Known Flow (cfs)	=	8.23	8.23	8.23	24.50

Note: Upstream surcharge (ft) = 0.83

STORM SEWER INLET REPORT

FLOW RESULTS (cfs)

Flow from Catchment	=	0.00	PONDING WIDTH (ft)	=	0.00
Carryover from previous inlet	=	0.00	DEPTH AT CURB (ft)	=	0.00
Total flow to current inlet	=	0.00	EFFICIENCY (%)		
Intercepted by current inlet	=	0.00	Curb = *		
Bypassed by current inlet	=	0.00	Grate = *	Total =	-inf
			Slot = *		

INPUT PARAMETERS:

Inlet Type	= NONE IN SAG		Longitudinal Slope (ft/ft)	=	0.000
Gutter Width (ft)	=	0.000	Pavement Cross Slope (ft/ft)	=	0.000
Inlet n-value	=	0.016	Normal Gutter XSlope (ft/ft)	=	0.000
Downstream Inlet number	=	28	Gutter depression (in)	=	0.00

MAIN SD1 100YR STM/10YR TW

Data File : D1E10010.STM Return Period: 100 Yrs

Rainfall file: PHX1.RND I = 87.730/ (Tc + 10.500) ^ 0.850

LINE 31 STORM SEWER HYDRAULIC REPORT

Diameter (in) = 24 N = 0.012 Critical Depth (in) = 5.59

Length (ft) = 65 Kj (JLC) = 1.3 Downstream Line # = 30

	INVERT (ft)	DEPTH (in)	HGL (ft)	EGL (ft)	CROWN (ft)	NAT GND (ft)	AREA (ft^2)	VEL (ft/s)
UPSTREAM	1124.07	6.96	1124.76	1124.84	1126.07	1129.57	0.76	2.29
DNSTREAM	1121.70	24.00	1124.67	1124.67	1123.70	1129.50	3.14	0.55
SLOPE(%)	3.649		0.133	0.251		0.108		

		CATCHMENT	CUMULATIVE		
Area (ac)	=	0.0	0.0		
Drainage Time (min)	=	0.00	0.00		
Intensity (in/h)	=	0.00	11.89	TOTAL	UNIFORM
Runoff Coefficient	=	0.00	0.00	FLOW	CAPACITY
Rational Flow (cfs)	=	0.00	0.00	(cfs)	(cfs)
Known Flow (cfs)	=	1.73	1.73	1.73	46.80

Note: Transitional flow exists in this line

STORM SEWER INLET REPORT

FLOW RESULTS (cfs)

Flow from Catchment	=	0.00	PONDING WIDTH (ft)	=	0.00	
Carryover from previous inlet	=	0.00	DEPTH AT CURB (ft)	=	0.00	
Total flow to current inlet	=	0.00	EFFICIENCY (%)			
Intercepted by current inlet	=	0.00	Curb =	*		
Bypassed by current inlet	=	0.00	Grate =	*	Total =	-inf
			Slot =	*		

INPUT PARAMETERS:

Inlet Type	= NONE IN SAG		Longitudinal Slope (ft/ft)	=	0.000
Gutter Width (ft)	=	0.000	Pavement Cross Slope (ft/ft)	=	0.000
Inlet n-value	=	0.016	Normal Gutter XSlope (ft/ft)	=	0.000
Downstream Inlet number	=	29	Gutter depression (in)	=	0.00

MAIN SD1 100YR STM/10YR TW

Data File : D1E10010.STM Return Period: 100 Yrs

Rainfall file: PHX1.RND I = 87.730/ (Tc + 10.500) ^ 0.850

LINE 32 STORM SEWER HYDRAULIC REPORT

Diameter (in) = 36 N = 0.024 Critical Depth (in) = 27.36

Length (ft) = 9 Kj (JLC) = 1.0 Downstream Line # = 10

	INVERT (ft)	DEPTH (in)	HGL (ft)	EGL (ft)	CROWN (ft)	NAT GND (ft)	AREA (ft^2)	VEL (ft/s)
UPSTREAM	1120.60	36.00	1125.45	1126.26	1123.60	1125.25	7.07	7.24
DNSTREAM	1120.12	36.00	1124.45	1125.27	1123.12	1129.00	7.07	7.24
SLOPE(%)	5.341		11.061	11.061		-41.667		

		CATCHMENT	CUMULATIVE		
Area (ac)	=	0.0	0.0		
Drainage Time (min)	=	0.00	0.00		
Intensity (in/h)	=	0.00	11.89	TOTAL	UNIFORM
Runoff Coefficient	=	0.00	0.00	FLOW	CAPACITY
Rational Flow (cfs)	=	0.00	0.00	(cfs)	(cfs)
Known Flow (cfs)	=	51.20	51.20	51.20	83.49

Note: Upstream surcharge (ft) = 1.85

STORM SEWER INLET REPORT

FLOW RESULTS (cfs)

Flow from Catchment	=	0.00	PONDING WIDTH (ft)	=	0.00
Carryover from previous inlet	=	0.00	DEPTH AT CURB (ft)	=	0.00
Total flow to current inlet	=	0.00	EFFICIENCY (%)		
Intercepted by current inlet	=	0.00	Curb = *		
Bypassed by current inlet	=	0.00	Grate = *	Total =	-inf
			Slot = *		

INPUT PARAMETERS:

Inlet Type	= NONE IN SAG		Longitudinal Slope (ft/ft)	=	0.000
Gutter Width (ft)	=	0.000	Pavement Cross Slope (ft/ft)	=	0.000
Inlet n-value	=	0.016	Normal Gutter XSlope (ft/ft)	=	0.000
Downstream Inlet number	=	30	Gutter depression (in)	=	0.00

E-89

MAIN SD1 100YR STM/10YR TW

Data File : D1E10010.STM Return Period: 100 Yrs

Rainfall file: PHX1.RND I = 87.730/ (Tc + 10.500) ^ 0.850

LINE 33 STORM SEWER HYDRAULIC REPORT

Diameter (in) = 24 N = 0.012 Critical Depth (in) = 6.84

Length (ft) = 114 Kj (JLC) = 1.3 Downstream Line # = 10

	INVERT (ft)	DEPTH (in)	HGL (ft)	EGL (ft)	CROWN (ft)	NAT GND (ft)	AREA (ft^2)	VEL (ft/s)
UPSTREAM	1126.09	6.84	1126.91	1127.10	1128.09	1131.59	0.74	3.51
DNSTREAM	1120.96	24.00	1124.52	1124.53	1122.96	1129.00	3.14	0.82
SLOPE(%)	4.505		2.100	2.258		2.272		

		CATCHMENT	CUMULATIVE		
Area (ac)	=	0.0	0.0		
Drainage Time (min)	=	0.00	0.00		
Intensity (in/h)	=	0.00	11.89	TOTAL	UNIFORM
Runoff Coefficient	=	0.00	0.00	FLOW	CAPACITY
Rational Flow (cfs)	=	0.00	0.00	(cfs)	(cfs)
Known Flow (cfs)	=	2.59	2.59	2.59	52.00

Note: Transitional flow exists in this line

STORM SEWER INLET REPORT

FLOW RESULTS (cfs)

Flow from Catchment	=	0.00	PONDING WIDTH (ft)	=	0.00
Carryover from previous inlet	=	0.00	DEPTH AT CURB (ft)	=	0.00
Total flow to current inlet	=	0.00	EFFICIENCY (%)		
Intercepted by current inlet	=	0.00	Curb = *		
Bypassed by current inlet	=	0.00	Grate = *	Total =	-inf
			Slot = *		

INPUT PARAMETERS:

Inlet Type	= NONE IN SAG		Longitudinal Slope (ft/ft)	=	0.000
Gutter Width (ft)	=	0.000	Pavement Cross Slope (ft/ft)	=	0.000
Inlet n-value	=	0.016	Normal Gutter XSlope (ft/ft)	=	0.000
Downstream Inlet number	=	31	Gutter depression (in)	=	0.00

MAIN SD1 100YR STM/10YR TW

Data File : D1E10010.STM Return Period: 100 Yrs

Rainfall file: PHX1.RND I = 87.730/ (Tc + 10.500) ^ 0.850

LINE 34 STORM SEWER HYDRAULIC REPORT

Diameter (in) = 24 N = 0.012 Critical Depth (in) = 5.47

Length (ft) = 43 Kj (JLC) = 1.3 Downstream Line # = 11

	INVERT (ft)	DEPTH (in)	HGL (ft)	EGL (ft)	CROWN (ft)	NAT GND (ft)	AREA (ft^2)	VEL (ft/s)
UPSTREAM	1124.50	5.47	1125.15	1125.29	1126.50	1130.00	0.54	3.08
DNSTREAM	1121.41	24.00	1124.62	1124.63	1123.41	1129.00	3.14	0.53
SLOPE(%)	7.205		1.216	1.548		2.326		

		CATCHMENT	CUMULATIVE	TOTAL FLOW (cfs)	UNIFORM CAPACITY (cfs)
Area (ac)	=	0.0	0.0		
Drainage Time (min)	=	0.00	0.00		
Intensity (in/h)	=	0.00	11.89		
Runoff Coefficient	=	0.00	0.00		
Rational Flow (cfs)	=	0.00	0.00		
Known Flow (cfs)	=	1.66	1.66	1.66	65.77

Note: Transitional flow exists in this line

STORM SEWER INLET REPORT

FLOW RESULTS (cfs)

Flow from Catchment = 0.00

Carryover from previous inlet = 0.00

Total flow to current inlet = 0.00

Intercepted by current inlet = 0.00

Bypassed by current inlet = 0.00

PONDING WIDTH (ft) = 0.00

DEPTH AT CURB (ft) = 0.00

EFFICIENCY (%)

Curb = *

Grate = * Total = -inf

Slot = *

INPUT PARAMETERS:

Inlet Type = NONE IN SAG

Gutter Width (ft) = 0.000

Inlet n-value = 0.016

Downstream Inlet number = 32

Longitudinal Slope (ft/ft) = 0.000

Pavement Cross Slope (ft/ft) = 0.000

Normal Gutter XSlope (ft/ft) = 0.000

Gutter depression (in) = 0.00

MAIN SD1 100YR STM/10YR TW

Data File : D1E10010.STM Return Period: 100 Yrs

Rainfall file: PHX1.RND I = 87.730/ (Tc + 10.500) ^ 0.850

LINE 35 STORM SEWER HYDRAULIC REPORT

Diameter (in) = 24 N = 0.012 Critical Depth (in) = 13.81

Length (ft) = 125 Kj (JLC) = 1.3 Downstream Line # = 12

	INVERT (ft)	DEPTH (in)	HGL (ft)	EGL (ft)	CROWN (ft)	NAT GND (ft)	AREA (ft²)	VEL (ft/s)
UPSTREAM	1122.68	24.00	1124.95	1125.12	1124.68	1133.20	3.14	3.36
DNSTREAM	1121.65	24.00	1124.71	1124.89	1123.65	1129.80	3.14	3.36
SLOPE(%)	0.824		0.186	0.186		2.720		

	CATCHMENT	CUMULATIVE		
Area (ac) =	0.0	0.0		
Drainage Time (min) =	0.00	0.46		
Intensity (in/h) =	0.00	11.47	TOTAL	UNIFORM
Runoff Coefficient =	0.00	0.00	FLOW	CAPACITY
Rational Flow (cfs) =	0.00	0.00	(cfs)	(cfs)
Known Flow (cfs) =	10.56	10.56	10.56	22.24

Note: Upstream surcharge (ft) = 0.27

STORM SEWER INLET REPORT

FLOW RESULTS (cfs)

Flow from Catchment = 0.00

Carryover from previous inlet = 0.00

Total flow to current inlet = 0.00

Intercepted by current inlet = 0.00

Bypassed by current inlet = 0.00

PONDING WIDTH (ft) = 0.00

DEPTH AT CURB (ft) = 0.00

EFFICIENCY (%)

Curb = *

Grate = * Total = -inf

Slot = *

INPUT PARAMETERS:

Inlet Type = NONE IN SAG

Gutter Width (ft) = 0.000

Inlet n-value = 0.016

Downstream Inlet number = 33

Longitudinal Slope (ft/ft) = 0.000

Pavement Cross Slope (ft/ft) = 0.000

Normal Gutter XSlope (ft/ft) = 0.000

Gutter depression (in) = 0.00

MAIN SD1 100YR STM/10YR TW

Data File : D1E10010.STM Return Period: 100 Yrs

Rainfall file: PHX1.RND I = 87.730/ (Tc + 10.500) ^ 0.850

LINE 36 STORM SEWER HYDRAULIC REPORT

Diameter (in) = 24 N = 0.012 Critical Depth (in) = 11.16

Length (ft) = 52 Kj (JLC) = 0.0 Downstream Line # = 35

	INVERT (ft)	DEPTH (in)	HGL (ft)	EGL (ft)	CROWN (ft)	NAT GND (ft)	AREA (ft^2)	VEL (ft/s)
UPSTREAM	1124.04	11.28	1124.98	1125.33	1126.04	1132.58	1.45	4.76
DNSTREAM	1123.78	14.07	1124.95	1125.15	1125.78	1133.20	1.91	3.61
SLOPE(%)	0.500		0.054	0.341		-1.192		

		CATCHMENT	CUMULATIVE	TOTAL FLOW (cfs)	UNIFORM CAPACITY (cfs)
Area (ac)	=	0.0	0.0		
Drainage Time (min)	=	0.00	0.25		
Intensity (in/h)	=	0.00	11.65		
Runoff Coefficient	=	0.00	0.00		
Rational Flow (cfs)	=	0.00	0.00		
Known Flow (cfs)	=	6.90	6.90	6.90	17.33

STORM SEWER INLET REPORT

FLOW RESULTS (cfs)

Flow from Catchment	=	0.00
Carryover from previous inlet	=	0.00
Total flow to current inlet	=	0.00
Intercepted by current inlet	=	0.00
Bypassed by current inlet	=	0.00

PONDING WIDTH (ft) = 0.00

DEPTH AT CURB (ft) = 0.00

EFFICIENCY (%)

Curb = *

Grate = * Total = -inf

Slot = *

INPUT PARAMETERS:

Inlet Type	= NONE IN SAG	Longitudinal Slope (ft/ft)	= 0.000
Gutter Width (ft)	= 0.000	Pavement Cross Slope (ft/ft)	= 0.000
Inlet n-value	= 0.016	Normal Gutter XSlope (ft/ft)	= 0.000
Downstream Inlet number	= 34	Gutter depression (in)	= 0.00

MAIN SDI 100YR STM/10YR TW

Data File : D1E10010.STM Return Period: 100 Yrs

Rainfall file: PHX1.RND I = 87.730/ (Tc + 10.500) ^ 0.850

LINE 37 STORM SEWER HYDRAULIC REPORT

Diameter (in) = 24 N = 0.012 Critical Depth (in) = 8.69

Length (ft) = 52 Kj (JLC) = 0.0 Downstream Line # = 36

	INVERT (ft)	DEPTH (in)	HGL (ft)	EGL (ft)	CROWN (ft)	NAT GND (ft)	AREA (ft^2)	VEL (ft/s)
UPSTREAM	1124.43	8.69	1125.15	1125.41	1126.43	1129.93	1.03	4.08
DNSTREAM	1124.04	11.28	1124.98	1125.11	1126.04	1132.58	1.45	2.88
SLOPE(%)	0.750		0.334	0.582		-5.096		

		CATCHMENT	CUMULATIVE		
Area (ac)	=	0.0	0.0		
Drainage Time (min)	=	0.00	0.00		
Intensity (in/h)	=	0.00	11.89	TOTAL	UNIFORM
Runoff Coefficient	=	0.00	0.00	FLOW	CAPACITY
Rational Flow (cfs)	=	0.00	0.00	(cfs)	(cfs)
Known Flow (cfs)	=	4.18	4.18	4.18	21.22

STORM SEWER INLET REPORT

FLOW RESULTS (cfs)

Flow from Catchment	=	0.00	PONDING WIDTH (ft)	=	0.00
Carryover from previous inlet	=	0.00	DEPTH AT CURB (ft)	=	0.00
Total flow to current inlet	=	0.00	EFFICIENCY (%)		
Intercepted by current inlet	=	0.00	Curb = *		
Bypassed by current inlet	=	0.00	Grate = *	Total =	-inf
			Slot = *		

INPUT PARAMETERS:

Inlet Type	= NONE IN SAG		Longitudinal Slope (ft/ft)	=	0.000
Gutter Width (ft)	=	0.000	Pavement Cross Slope (ft/ft)	=	0.000
Inlet n-value	=	0.016	Normal Gutter XSlope (ft/ft)	=	0.000
Downstream Inlet number	=	35	Gutter depression (in)	=	0.00

MAIN SD1 100YR STM/10YR TW

Data File : D1E10010.STM Return Period: 100 Yrs

Rainfall file: PHX1.RND I = 87.730/ (Tc + 10.500) ^ 0.850

LINE 38 STORM SEWER HYDRAULIC REPORT

Diameter (in) = 24 N = 0.012 Critical Depth (in) = 4.73

Length (ft) = 39 Kj (JLC) = 1.3 Downstream Line # = 13

	INVERT (ft)	DEPTH (in)	HGL (ft)	EGL (ft)	CROWN (ft)	NAT GND (ft)	AREA (ft^2)	VEL (ft/s)
UPSTREAM	1124.72	4.73	1125.28	1125.40	1126.72	1130.22	0.44	2.83
DNSTREAM	1121.42	24.00	1125.08	1125.08	1123.42	1130.10	3.14	0.39
SLOPE(%)	8.492		0.511	0.823		0.308		

	CATCHMENT	CUMULATIVE	TOTAL FLOW (cfs)	UNIFORM CAPACITY (cfs)
Area (ac) =	0.0	0.0		
Drainage Time (min) =	0.00	0.00		
Intensity (in/h) =	0.00	11.89		
Runoff Coefficient =	0.00	0.00		
Rational Flow (cfs) =	0.00	0.00		
Known Flow (cfs) =	1.24	1.24	1.24	71.40

Note: Transitional flow exists in this line

STORM SEWER INLET REPORT

FLOW RESULTS (cfs)

Flow from Catchment = 0.00

Carryover from previous inlet = 0.00

Total flow to current inlet = 0.00

Intercepted by current inlet = 0.00

Bypassed by current inlet = 0.00

PONDING WIDTH (ft) = 0.00

DEPTH AT CURB (ft) = 0.00

EFFICIENCY (%)

Curb = *

Grate = * Total = -inf

Slot = *

INPUT PARAMETERS:

Inlet Type = NONE IN SAG

Gutter Width (ft) = 0.000

Inlet n-value = 0.016

Downstream Inlet number = 36

Longitudinal Slope (ft/ft) = 0.000

Pavement Cross Slope (ft/ft) = 0.000

Normal Gutter XSlope (ft/ft) = 0.000

Gutter depression (in) = 0.00

MAIN SD1 100YR STM/10YR TW

Data File : D1E10010.STM Return Period: 100 Yrs

Rainfall file: PHX1.RND I = 87.730/ (Tc + 10.500) ^ 0.850

LINE 39 STORM SEWER HYDRAULIC REPORT

Diameter (in) = 24 N = 0.012 Critical Depth (in) = 10.07

Length (ft) = 12 Kj (JLC) = 1.3 Downstream Line # = 15

	INVERT (ft)	DEPTH (in)	HGL (ft)	EGL (ft)	CROWN (ft)	NAT GND (ft)	AREA (ft^2)	VEL (ft/s)
UPSTREAM	1122.90	24.00	1126.09	1126.14	1124.90	1127.98	3.14	1.79
DNSTREAM	1122.84	24.00	1126.02	1126.07	1124.84	1128.35	3.14	1.79
SLOPE(%)	0.500		0.591	0.591		-3.083		

		CATCHMENT	CUMULATIVE		
Area (ac)	=	0.0	0.0		
Drainage Time (min)	=	0.00	0.00		
Intensity (in/h)	=	0.00	11.89	TOTAL	UNIFORM
Runoff Coefficient	=	0.00	0.00	FLOW	CAPACITY
Rational Flow (cfs)	=	0.00	0.00	(cfs)	(cfs)
Known Flow (cfs)	=	5.62	5.62	5.62	17.33

Note: Upstream surcharge (ft) = 1.19

STORM SEWER INLET REPORT

FLOW RESULTS (cfs)

Flow from Catchment	=	0.00
Carryover from previous inlet	=	0.00
Total flow to current inlet	=	0.00
Intercepted by current inlet	=	0.00
Bypassed by current inlet	=	0.00

PONDING WIDTH (ft) = 0.00

DEPTH AT CURB (ft) = 0.00

EFFICIENCY (%)

Curb = *

Grate = * Total = -inf

Slot = *

INPUT PARAMETERS:

Inlet Type	= NONE IN SAG	Longitudinal Slope (ft/ft)	= 0.000
Gutter Width (ft)	= 0.000	Pavement Cross Slope (ft/ft)	= 0.000
Inlet n-value	= 0.016	Normal Gutter XSlope (ft/ft)	= 0.000
Downstream Inlet number	= 37	Gutter depression (in)	= 0.00

CATCH BASIN 103 TO SALT RIVER OUTFALL

101/19/94 NOTE: INCLUDES FUTURE STORM DRAIN (103FU & 115FU) NEAR UNIVERSITY DRIVE.

STORM SEWER SUMMARY REPORT
MAIN SDCP1 10YR STM/10YR TW
FILE: C1E10T10.STM
CIPCP (n= 0.015)

RAINFALL FILE: PHX1.RND — 10 YEAR DESIGN STORM — I = 50.790/ (Tc + 9.250) ^ 0.830

LINE ID		FLOW RATE INFO						PIPE INFO					HYDRAULIC INFO		
LINE#	DESCRIPTION DOWNLINE#	INC AR TOT AR (ac)	RUNOFFC WEIGHTD C	INLTIME Tc (min)	INLT I TOTL I (in/h)	INC CIA TOT CIA (cfs)	INPUTQ TOTALQ (cfs)	UNIFORM FLOWCAP (cfs)	SIZE/ TYPE (in)	INVERT UP/DOWN (ft)	PIPE LEN (ft)	NVAL INVSLOP (ft/ft)	HGLSLOPE JLC (ft/ft)	HYD GRD UP/DOWN (ft)	VEL UP/DOWN (ft/s)
1	Pipe #140	0.0	0.00	0.00	8.01	0.00	78.20		78D	1111.73	122	0.015	0.000	1120.74	2.36
	DNLN = 0	0.0	-nan	27.12	2.57	0.00	78.20	209.8	78D	1111.47		0.002	1.00	1120.70	2.36
2	Pipe #139	0.0	0.00	0.00	8.01	0.00	78.20		78D	1112.34	275	0.015	0.000	1120.85	2.36
	DNLN = 1	0.0	-nan	25.18	2.69	0.00	78.20	212.3	78D	1111.74		0.002	0.41	1120.77	2.36
3	Pipe #136	0.0	0.00	0.00	8.01	0.00	71.80		78D	1113.50	522	0.015	0.000	1120.99	2.16
	DNLN = 2	0.0	-nan	21.16	2.98	0.00	71.80	213.3	78D	1112.35		0.002	0.06	1120.86	2.16
4	Pipe #133	0.0	0.00	0.00	8.01	0.00	65.60		78D	1114.15	300	0.015	0.000	1121.05	1.98
	DNLN = 3	0.0	-nan	18.63	3.21	0.00	65.60	211.5	78D	1113.50		0.002	0.03	1120.99	1.98
5	Pipe #131	0.0	0.00	0.00	8.01	0.00	64.00		78D	1114.70	250	0.015	0.000	1121.10	1.93
	DNLN = 4	0.0	-nan	16.47	3.43	0.00	64.00	211.2	78D	1114.16		0.002	0.00	1121.05	1.93
6	Pipe #129	0.0	0.00	0.00	8.01	0.00	60.40		78D	1115.25	250	0.015	0.000	1121.13	1.91
	DNLN = 5	0.0	-nan	14.24	3.70	0.00	60.40	211.2	78D	1114.71		0.002	0.03	1121.10	1.83
7	Pipe #128	0.0	0.00	0.00	8.01	0.00	60.40		78D	1116.06	369	0.015	0.000	1121.21	2.14
	DNLN = 6	0.0	-nan	11.21	4.15	0.00	60.40	211.6	78D	1115.26		0.002	0.07	1121.14	1.91
8	Pipe #125	0.0	0.00	0.00	8.01	0.00	23.70		48D	1119.44	273	0.015	0.001	1121.41	3.84
	DNLN = 7	0.0	-nan	9.87	4.39	0.00	23.70	61.7	48D	1118.77		0.002	0.06	1121.21	2.95
9	Pipe #124	0.0	0.00	0.00	8.01	0.00	23.70		48D	1119.99	217	0.015	0.001	1121.88	4.05
	DNLN = 8	0.0	-nan	8.89	4.58	0.00	23.70	62.1	48D	1119.45		0.002	1.04	1121.65	3.35
10	Pipe #120	0.0	0.00	0.00	8.01	0.00	21.40		48D	1120.14	60	0.015	0.001	1122.16	3.37
	DNLN = 9	0.0	-nan	8.59	4.65	0.00	21.40	60.1	48D	1120.00		0.002	0.87	1122.10	3.20
11	Pipe #118	0.0	0.00	0.00	8.01	0.00	19.80		48D	1120.54	162	0.015	0.001	1122.30	3.71
	DNLN = 10	0.0	-nan	7.80	4.82	0.00	19.80	61.1	48D	1120.15		0.002	0.03	1122.16	3.13
12	Pipe #116	0.0	0.00	0.00	8.01	0.00	18.80		48D	1120.88	136	0.015	0.001	1122.49	3.98
	DNLN = 11	0.0	-nan	7.19	4.97	0.00	18.80	61.3	48D	1120.55		0.002	0.03	1122.31	3.53
13	Pipe #112	0.0	0.00	0.00	8.01	0.00	12.30		36D	1121.16	112	0.015	0.001	1122.65	3.52
	DNLN = 12	0.0	-nan	6.64	5.12	0.00	12.30	28.4	36D	1120.89		0.002	0.03	1122.50	3.19

MAIN SDCP1 10YR STM/10YR TW
FILE: C1E10T10.STM

RAINFALL FILE: PHX1.RND 10 YEAR DESIGN STORM I = 50.790/ (Tc + 9.250) ^ 0.830

LINE ID		FLOW RATE INFO						PIPE INFO					HYDRAULIC INFO		
LINE#	DESCRIPTION DOWNLINE#	INC AR TOT AR (ac)	RUNOFFC WEIGHTD C	INLTIME Tc (min)	INLT I TOTL I (in/h)	INC CIA TOT CIA (cfs)	INPUTQ TOTALQ (cfs)	UNIFORM FLOWCAP (cfs)	SIZE/ TYPE (in)	INVERT UP/DOWN (ft)	PIPE LEN (ft)	NVAL INVSLOP (ft/ft)	HGLSLOPE JLC (ft/ft)	HYD GRD UP/DOWN (ft)	VEL UP/DOWN (ft/s)
14	Pipe #110	0.0	0.00	0.00	8.01	0.00	11.50		36D	1122.03	346	0.015	0.002	1123.33	3.91
	DNLN = 13	0.0	-nan	5.04	5.59	0.00	11.50	28.8	36D	1121.17		0.002	0.03	1122.65	3.30
15	Pipe #107	0.0	0.00	0.00	8.01	0.00	10.40		36D	1122.73	280	0.015	0.002	1123.98	3.75
	DNLN = 14	0.0	-nan	3.76	6.04	0.00	10.40	28.7	36D	1122.04		0.002	0.04	1123.34	3.54
16	Pipe #105	0.0	0.00	0.00	8.01	0.00	6.90		24D	1123.35	239	0.015	0.003	1124.59	3.38
	DNLN = 15	0.0	-nan	2.58	6.54	0.00	6.90	9.9	24D	1122.74		0.003	0.04	1123.98	3.36
17	Pipe #104	0.0	0.00	0.00	8.01	0.00	5.20		24D	1123.49	32	0.015	0.000	1124.86	2.27
	DNLN = 16	0.0	-nan	2.33	6.65	0.00	5.20	11.0	24D	1123.39		0.003	1.44	1124.84	2.13
18	Pipe #103fu	0.0	0.00	0.00	8.01	0.00	2.60		24D	1123.92	118	0.015	0.000	1124.93	1.64
	DNLN = 17	0.0	-nan	0.90	7.42	0.00	2.60	11.8	24D	1123.49		0.004	0.45	1124.89	1.10
19	Pipe #103	0.0	0.00	0.00	8.01	0.00	0.80		24D	1124.01	29	0.015	0.000	1124.93	0.57
	DNLN = 18	0.0	-nan	0.00	8.01	0.00	0.80	10.9	24D	1123.92		0.003	0.04	1124.93	0.50
20	CB #103	0.0	0.00	0.00	8.01	0.00	0.80		24D	1124.02	0	0.015	1.001	1124.94	0.57
	DNLN = 19	0.0	-nan	0.00	8.01	0.00	0.80	0.0	24D	1124.02		0.000	1.04	1124.93	0.57
21	Pipe #138	0.0	0.00	0.00	8.01	0.00	6.34		24D	1136.76	64	0.015	0.261	1137.65	4.68
	DNLN = 2	0.0	-nan	0.30	7.80	0.00	6.34	116.3	24D	1115.50		0.352	1.30	1120.96	2.02
22	Pipe #137	0.0	0.00	0.00	8.01	0.00	3.27		24D	1137.42	59	0.015	0.007	1138.07	3.77
	DNLN = 21	0.0	-nan	0.00	8.01	0.00	3.27	19.1	24D	1136.86		0.009	0.04	1137.67	2.76
23	Pipe #135	0.0	0.00	0.00	8.01	0.00	6.21		24D	1133.03	40	0.015	0.321	1133.91	4.65
	DNLN = 3	0.0	-nan	0.31	7.80	0.00	6.21	131.2	24D	1116.67		0.448	1.30	1121.08	1.98
24	Pipe #134	0.0	0.00	0.00	8.01	0.00	3.15		24D	1133.74	59	0.015	0.008	1134.38	3.73
	DNLN = 23	0.0	-nan	0.00	8.01	0.00	3.15	19.9	24D	1133.13		0.010	0.04	1133.93	2.70
25	Pipe #132	0.0	0.00	0.00	8.01	0.00	1.63		24D	1130.95	39	0.015	0.268	1131.59	3.06
	DNLN = 4	0.0	-nan	0.00	8.01	0.00	1.63	119.1	24D	1117.45		0.369	1.30	1121.13	0.52
26	Pipe #130pi	0.0	0.00	0.00	8.01	0.00	3.55		24D	1125.76	29	0.015	0.181	1126.43	3.87
	DNLN = 5	0.0	-nan	0.62	7.59	0.00	3.55	105.4	24D	1117.70		0.289	1.30	1121.18	1.13

MAIN SDCP1 10YR STM/10YR TW
FILE: C1E10T10.STM

RAINFALL FILE: PHX1.RND 10 YEAR DESIGN STORM I = 50.790/ (Tc + 9.250) ^ 0.830

LINE ID		FLOW RATE INFO						PIPE INFO					HYDRAULIC INFO		
LINE#	DESCRIPTION DOWNLINE#	INC AR TOT AR (ac)	RUNOFFC WEIGHTD C	INLTIME Tc (min)	INLT I TOTL I (in/h)	INC CIA TOT CIA (cfs)	INPUTQ TOTALQ (cfs)	UNIFORM FLOWCAP (cfs)	SIZE/ TYPE (in)	INVERT UP/DOWN (ft)	PIPE LEN (ft)	NVAL INVSLOP (ft/ft)	HGLSLOPE JLC (ft/ft)	HYD GRD UP/DOWN (ft)	VEL UP/DOWN (ft/s)
27	Pipe #130p2	0.0	0.00	0.00	8.01	0.00	3.55		24D	1126.46	139	0.015	0.005	1127.16	3.65
	DNLN = 26	0.0	-nan	0.00	8.01	0.00	3.55	13.9	24D	1125.76		0.005	0.04	1126.44	3.80
28	Pipe #127	0.0	0.00	0.00	8.01	0.00	13.01		24D	1120.73	97	0.015	0.007	1122.01	6.14
	DNLN = 7	0.0	-nan	0.41	7.73	0.00	13.01	32.0	24D	1118.14		0.027	1.30	1121.30	4.14
29	Pipe #126	0.0	0.00	0.00	8.01	0.00	6.60		24D	1121.30	95	0.015	0.003	1122.27	4.43
	DNLN = 28	0.0	-nan	0.00	8.01	0.00	6.60	13.8	24D	1120.83		0.005	0.04	1122.03	3.35
30	Pipe #123	0.0	0.00	0.00	8.01	0.00	5.86		24D	1121.70	160	0.015	0.002	1122.56	4.56
	DNLN = 9	0.0	-nan	0.68	7.56	0.00	5.86	19.6	24D	1120.10		0.010	1.30	1122.21	1.87
31	Pipe #122	0.0	0.00	0.00	8.01	0.00	1.06		24D	1124.07	65	0.015	0.025	1124.58	2.71
	DNLN = 30	0.0	-nan	0.00	8.01	0.00	1.06	37.4	24D	1121.70		0.036	1.30	1122.98	0.50
32	Pipe #121	0.0	0.00	0.00	8.01	0.00	20.20		36D	1120.60	9	0.015	0.030	1122.60	5.98
	DNLN = 10	0.0	-nan	0.00	8.01	0.00	20.20	133.6	36D	1120.12		0.053	1.00	1122.33	3.61
33	Pipe #119	0.0	0.00	0.00	8.01	0.00	1.59		24D	1126.09	114	0.015	0.038	1126.72	3.04
	DNLN = 10	0.0	-nan	0.00	8.01	0.00	1.59	41.6	24D	1120.96		0.045	1.30	1122.39	0.66
34	Pipe #117	0.0	0.00	0.00	8.01	0.00	1.02		24D	1124.50	43	0.015	0.056	1125.00	2.68
	DNLN = 11	0.0	-nan	0.00	8.01	0.00	1.02	52.6	24D	1121.41		0.072	1.30	1122.58	0.53
35	Pipe #115	0.0	0.00	0.00	8.01	0.00	6.49		24D	1122.68	125	0.015	0.006	1123.58	4.72
	DNLN = 12	0.0	-nan	0.52	7.66	0.00	6.49	17.8	24D	1121.65		0.008	1.30	1122.81	3.44
36	Pipe ~~#115u~~ 175	0.0	0.00	0.00	8.01	0.00	4.24		24D	1124.04	51	0.015	0.006	1124.82	3.75
	DNLN = 35	0.0	-nan	0.31	7.80	0.00	4.24	14.0	24D	1123.78		0.005	0.04	1124.51	4.09
37	Pipe #113	0.0	0.00	0.00	8.01	0.00	2.57		24D	1124.43	57	0.015	0.003	1125.01	3.43
	DNLN = 36	0.0	-nan	0.00	8.01	0.00	2.57	14.0	24D	1124.14		0.005	0.00	1124.82	2.74
38	Pipe #111	0.0	0.00	0.00	8.01	0.00	0.76		24D	1124.72	39	0.015	0.058	1125.15	2.47
	DNLN = 13	0.0	-nan	0.00	8.01	0.00	0.76	57.1	24D	1121.42		0.085	1.30	1122.90	0.31
39	Pipe #106	0.0	0.00	0.00	8.01	0.00	3.45		24D	1122.90	12	0.015	0.003	1124.30	1.53
	DNLN = 15	0.0	-nan	0.00	8.01	0.00	3.45	13.9	24D	1122.84		0.005	1.30	1124.26	1.45

MAIN SDCP1 10YR STM/10YR TW

Data File : C1E10T10.STM Return Period: 10 Yrs

Rainfall file: PHX1.RND I = 50.790/ (Tc + 9.250) ^ 0.830

LINE 1 STORM SEWER HYDRAULIC REPORT

Diameter (in) = 78 N = 0.015 Critical Depth (in) = 27.66

Length (ft) = 122 Kj (JLC) = 1.0 Downstream Line # = OUTFALL

	INVERT (ft)	DEPTH (in)	HGL (ft)	EGL (ft)	CROWN (ft)	NAT GND (ft)	AREA (ft^2)	VEL (ft/s)
UPSTREAM	1111.73	78.00	1120.74	1120.82	1118.23	1125.00	33.18	2.36
DNSTREAM	1111.47	78.00	1120.70	1120.79	1117.97	1119.47	33.18	2.36
SLOPE(%)	0.213		0.030	0.030		4.533		

		CATCHMENT	CUMULATIVE		
Area (ac)	=	0.0	0.0		
Drainage Time (min)	=	0.00	27.12		
Intensity (in/h)	=	0.00	2.57	TOTAL	UNIFORM
Runoff Coefficient	=	0.00	0.00	FLOW	CAPACITY
Rational Flow (cfs)	=	0.00	0.00	(cfs)	(cfs)
Known Flow (cfs)	=	78.20	78.20	78.20	209.80

Note: Upstream surcharge (ft) = 2.51

STORM SEWER INLET REPORT

FLOW RESULTS (cfs)

Flow from Catchment	=	0.00
Carryover from previous inlet	=	0.00
Total flow to current inlet	=	0.00
Intercepted by current inlet	=	0.00
Bypassed by current inlet	=	0.00

PONDING WIDTH (ft) = 0.00

DEPTH AT CURB (ft) = 0.00

EFFICIENCY (%)

Curb = *

Grate = * Total = -inf

Slot = *

INPUT PARAMETERS:

Inlet Type	= NONE IN SAG	Longitudinal Slope (ft/ft)	= 0.000
Gutter Width (ft)	= 0.000	Pavement Cross Slope (ft/ft)	= 0.000
Inlet n-value	= 0.016	Normal Gutter XSlope (ft/ft)	= 0.000
Downstream Inlet number	= 0	Gutter depression (in)	= 0.00

E-100

MAIN SDCP1 10YR STM/10YR TW

Data File : C1E10T10.STM Return Period: 10 Yrs

Rainfall file: PHX1.RND I = 50.790/ (Tc + 9.250) ^ 0.830

LINE 2 STORM SEWER HYDRAULIC REPORT

Diameter (in) = 78 N = 0.015 Critical Depth (in) = 27.66

Length (ft) = 275 Kj (JLC) = 0.4 Downstream Line # = 1

	INVERT (ft)	DEPTH (in)	HGL (ft)	EGL (ft)	CROWN (ft)	NAT GND (ft)	AREA (ft^2)	VEL (ft/s)
UPSTREAM	1112.34	78.00	1120.85	1120.94	1118.84	1123.20	33.18	2.36
DNSTREAM	1111.74	78.00	1120.77	1120.86	1118.24	1125.00	33.18	2.36
SLOPE(%)	0.218		0.030	0.030		-0.655		

		CATCHMENT	CUMULATIVE	TOTAL FLOW (cfs)	UNIFORM CAPACITY (cfs)
Area (ac)	=	0.0	0.0		
Drainage Time (min)	=	0.00	25.18		
Intensity (in/h)	=	0.00	2.69		
Runoff Coefficient	=	0.00	0.00		
Rational Flow (cfs)	=	0.00	0.00		
Known Flow (cfs)	=	78.20	78.20	78.20	212.27

Note: Upstream surcharge (ft) = 2.01

STORM SEWER INLET REPORT

FLOW RESULTS (cfs)

Flow from Catchment = 0.00

Carryover from previous inlet = 0.00

Total flow to current inlet = 0.00

Intercepted by current inlet = 0.00

Bypassed by current inlet = 0.00

PONDING WIDTH (ft) = 0.00

DEPTH AT CURB (ft) = 0.00

EFFICIENCY (%)

Curb = *

Grate = * Total = -inf

Slot = *

INPUT PARAMETERS:

Inlet Type = NONE IN SAG

Gutter Width (ft) = 0.000

Inlet n-value = 0.016

Downstream Inlet number = 1

Longitudinal Slope (ft/ft) = 0.000

Pavement Cross Slope (ft/ft) = 0.000

Normal Gutter XSlope (ft/ft) = 0.000

Gutter depression (in) = 0.00

MAIN SDCP1 10YR STM/10YR TW

Data File : C1E10T10.STM Return Period: 10 Yrs

Rainfall file: PHX1.RND I = 50.790/ (Tc + 9.250) ^ 0.830

LINE 3 STORM SEWER HYDRAULIC REPORT

Diameter (in) = 78 N = 0.015 Critical Depth (in) = 26.50

Length (ft) = 522 Kj (JLC) = 0.1 Downstream Line # = 2

	INVERT (ft)	DEPTH (in)	HGL (ft)	EGL (ft)	CROWN (ft)	NAT GND (ft)	AREA (ft^2)	VEL (ft/s)
UPSTREAM	1113.50	78.00	1120.99	1121.06	1120.00	1124.15	33.18	2.16
DNSTREAM	1112.35	78.00	1120.86	1120.93	1118.85	1123.20	33.18	2.16
SLOPE(%)	0.220		0.025	0.025		0.182		

		CATCHMENT	CUMULATIVE		
Area (ac)	=	0.0	0.0		
Drainage Time (min)	=	0.00	21.16		
Intensity (in/h)	=	0.00	2.98	TOTAL	UNIFORM
Runoff Coefficient	=	0.00	0.00	FLOW	CAPACITY
Rational Flow (cfs)	=	0.00	0.00	(cfs)	(cfs)
Known Flow (cfs)	=	71.80	71.80	71.80	213.31

Note: Upstream surcharge (ft) = 0.99

STORM SEWER INLET REPORT

FLOW RESULTS (cfs)

Flow from Catchment	=	0.00	PONDING WIDTH (ft)	=	0.00
Carryover from previous inlet	=	0.00	DEPTH AT CURB (ft)	=	0.00
Total flow to current inlet	=	0.00	EFFICIENCY (%)		
Intercepted by current inlet	=	0.00	Curb = *		
Bypassed by current inlet	=	0.00	Grate = *	Total =	-inf
			Slot = *		

INPUT PARAMETERS:

Inlet Type	=	NONE IN SAG	Longitudinal Slope (ft/ft)	=	0.000
Gutter Width (ft)	=	0.000	Pavement Cross Slope (ft/ft)	=	0.000
Inlet n-value	=	0.016	Normal Gutter XSlope (ft/ft)	=	0.000
Downstream Inlet number	=	2	Gutter depression (in)	=	0.00

MAIN SDCP1 10YR STM/10YR TW

Data File : C1E10T10.STM Return Period: 10 Yrs

Rainfall file: PHX1.RND I = 50.790/ (Tc + 9.250) ^ 0.830

LINE 4 STORM SEWER HYDRAULIC REPORT

Diameter (in) = 78 N = 0.015 Critical Depth (in) = 25.33

Length (ft) = 300 Kj (JLC) = 0.0 Downstream Line # = 3

	INVERT (ft)	DEPTH (in)	HGL (ft)	EGL (ft)	CROWN (ft)	NAT GND (ft)	AREA (ft^2)	VEL (ft/s)
UPSTREAM	1114.15	78.00	1121.05	1121.11	1120.65	1125.40	33.18	1.98
DNSTREAM	1113.50	78.00	1120.99	1121.05	1120.00	1124.15	33.18	1.98
SLOPE(%)	0.217		0.021	0.021		0.417		

		CATCHMENT	CUMULATIVE	TOTAL FLOW (cfs)	UNIFORM CAPACITY (cfs)
Area (ac)	=	0.0	0.0		
Drainage Time (min)	=	0.00	18.63		
Intensity (in/h)	=	0.00	3.21		
Runoff Coefficient	=	0.00	0.00		
Rational Flow (cfs)	=	0.00	0.00		
Known Flow (cfs)	=	65.60	65.60	65.60	211.54

Note: Upstream surcharge (ft) = 0.40

STORM SEWER INLET REPORT

FLOW RESULTS (cfs)

Flow from Catchment	=	0.00
Carryover from previous inlet	=	0.00
Total flow to current inlet	=	0.00
Intercepted by current inlet	=	0.00
Bypassed by current inlet	=	0.00

PONDING WIDTH (ft) = 0.00

DEPTH AT CURB (ft) = 0.00

EFFICIENCY (%)

Curb = *

Grate = * Total = -inf

Slot = *

INPUT PARAMETERS:

Inlet Type	= NONE IN SAG	Longitudinal Slope (ft/ft)	= 0.000
Gutter Width (ft)	= 0.000	Pavement Cross Slope (ft/ft)	= 0.000
Inlet n-value	= 0.016	Normal Gutter XSlope (ft/ft)	= 0.000
Downstream Inlet number	= 3	Gutter depression (in)	= 0.00

MAIN SDCP1 10YR STM/10YR TW

Data File : C1E10T10.STM Return Period: 10 Yrs

Rainfall file: PHX1.RND I = 50.790/ (Tc + 9.250) ^ 0.830

LINE 5 STORM SEWER HYDRAULIC REPORT

Diameter (in) = 78 N = 0.015 Critical Depth (in) = 25.02

Length (ft) = 250 Kj (JLC) = 0.0 Downstream Line # = 4

	INVERT (ft)	DEPTH (in)	HGL (ft)	EGL (ft)	CROWN (ft)	NAT GND (ft)	AREA (ft^2)	VEL (ft/s)
UPSTREAM	1114.70	76.81	1121.10	1121.16	1121.20	1125.45	33.08	1.93
DNSTREAM	1114.16	78.00	1121.05	1121.11	1120.66	1125.40	33.18	1.93
SLOPE(%)	0.216		0.019	0.019		0.020		

	CATCHMENT	CUMULATIVE	TOTAL FLOW (cfs)	UNIFORM CAPACITY (cfs)
Area (ac) =	0.0	0.0		
Drainage Time (min) =	0.00	16.47		
Intensity (in/h) =	0.00	3.43		
Runoff Coefficient =	0.00	0.00		
Rational Flow (cfs) =	0.00	0.00		
Known Flow (cfs) =	64.00	64.00	64.00	211.20

Note: Transitional flow exists in this line

STORM SEWER INLET REPORT

FLOW RESULTS (cfs)

Flow from Catchment = 0.00

Carryover from previous inlet = 0.00

Total flow to current inlet = 0.00

Intercepted by current inlet = 0.00

Bypassed by current inlet = 0.00

PONDING WIDTH (ft) = 0.00

DEPTH AT CURB (ft) = 0.00

EFFICIENCY (%)

Curb = *

Grate = * Total = -inf

Slot = *

INPUT PARAMETERS:

Inlet Type = NONE IN SAG

Gutter Width (ft) = 0.000

Inlet n-value = 0.016

Downstream Inlet number = 4

Longitudinal Slope (ft/ft) = 0.000

Pavement Cross Slope (ft/ft) = 0.000

Normal Gutter XSlope (ft/ft) = 0.000

Gutter depression (in) = 0.00

MAIN SDCP1 10YR STM/10YR TW

Data File : C1E10T10.STM Return Period: 10 Yrs

Rainfall file: PHX1.RND I = 50.790/ (Tc + 9.250) ^ 0.830

LINE 6 STORM SEWER HYDRAULIC REPORT

Diameter (in) = 78 N = 0.015 Critical Depth (in) = 24.31

Length (ft) = 250 Kj (JLC) = 0.0 Downstream Line # = 5

	INVERT (ft)	DEPTH (in)	HGL (ft)	EGL (ft)	CROWN (ft)	NAT GND (ft)	AREA (ft^2)	VEL (ft/s)
UPSTREAM	1115.25	70.58	1121.13	1121.19	1121.75	1126.00	31.58	1.91
DNSTREAM	1114.71	76.71	1121.10	1121.15	1121.21	1125.45	33.06	1.83
SLOPE(%)	0.216		0.012	0.014		0.220		

		CATCHMENT	CUMULATIVE		
Area (ac)	=	0.0	0.0		
Drainage Time (min)	=	0.00	14.24		
Intensity (in/h)	=	0.00	3.70	TOTAL	UNIFORM
Runoff Coefficient	=	0.00	0.00	FLOW	CAPACITY
Rational Flow (cfs)	=	0.00	0.00	(cfs)	(cfs)
Known Flow (cfs)	=	60.40	60.40	60.40	211.22

STORM SEWER INLET REPORT

FLOW RESULTS (cfs)

Flow from Catchment	=	0.00	PONDING WIDTH (ft)	=	0.00
Carryover from previous inlet	=	0.00	DEPTH AT CURB (ft)	=	0.00
Total flow to current inlet	=	0.00	EFFICIENCY (%)		
Intercepted by current inlet	=	0.00	Curb = *		
Bypassed by current inlet	=	0.00	Grate = *	Total =	-inf
			Slot = *		

INPUT PARAMETERS:

Inlet Type	= NONE IN SAG		Longitudinal Slope (ft/ft)	=	0.000
Gutter Width (ft)	=	0.000	Pavement Cross Slope (ft/ft)	=	0.000
Inlet n-value	=	0.016	Normal Gutter XSlope (ft/ft)	=	0.000
Downstream Inlet number	=	5	Gutter depression (in)	=	0.00

E-105

MAIN SDCP1 10YR STM/10YR TW

Data File : C1E10T10.STM Return Period: 10 Yrs

Rainfall file: PHX1.RND I = 50.790/ (Tc + 9.250) ^ 0.830

LINE 7 STORM SEWER HYDRAULIC REPORT

Diameter (in) = 78 N = 0.015 Critical Depth (in) = 24.31

Length (ft) = 369 Kj (JLC) = 0.1 Downstream Line # = 6

	INVERT (ft)	DEPTH (in)	HGL (ft)	EGL (ft)	CROWN (ft)	NAT GND (ft)	AREA (ft²)	VEL (ft/s)
UPSTREAM	1116.06	61.78	1121.21	1121.28	1122.56	1128.00	28.19	2.14
DNSTREAM	1115.26	70.51	1121.14	1121.19	1121.76	1126.00	31.56	1.91
SLOPE(%)	0.217		0.020	0.024		0.542		

		CATCHMENT	CUMULATIVE		
Area (ac)	=	0.0	0.0		
Drainage Time (min)	=	0.00	11.21		
Intensity (in/h)	=	0.00	4.15	TOTAL	UNIFORM
Runoff Coefficient	=	0.00	0.00	FLOW	CAPACITY
Rational Flow (cfs)	=	0.00	0.00	(cfs)	(cfs)
Known Flow (cfs)	=	60.40	60.40	60.40	211.61

STORM SEWER INLET REPORT

FLOW RESULTS (cfs)

Flow from Catchment	=	0.00	PONDING WIDTH (ft)	=	0.00
Carryover from previous inlet	=	0.00	DEPTH AT CURB (ft)	=	0.00
Total flow to current inlet	=	0.00	EFFICIENCY (%)		
Intercepted by current inlet	=	0.00	Curb = *		
Bypassed by current inlet	=	0.00	Grate = *	Total =	-inf
			Slot = *		

INPUT PARAMETERS:

Inlet Type	= NONE IN SAG		Longitudinal Slope (ft/ft)	=	0.000
Gutter Width (ft)	=	0.000	Pavement Cross Slope (ft/ft)	=	0.000
Inlet n-value	=	0.016	Normal Gutter XSlope (ft/ft)	=	0.000
Downstream Inlet number	=	6	Gutter depression (in)	=	0.00

MAIN SDCP1 10YR STM/10YR TW

Data File : C1E10T10.STM Return Period: 10 Yrs
Rainfall file: PHX1.RND I = 50.790/ (Tc + 9.250) ^ 0.830

LINE 8 STORM SEWER HYDRAULIC REPORT

Diameter (in) = 48 N = 0.015 Critical Depth (in) = 17.27
Length (ft) = 273 Kj (JLC) = 0.1 Downstream Line # = 7

	INVERT (ft)	DEPTH (in)	HGL (ft)	EGL (ft)	CROWN (ft)	NAT GND (ft)	AREA (ft²)	VEL (ft/s)
UPSTREAM	1119.44	23.66	1121.41	1121.64	1123.44	1127.30	6.17	3.84
DNSTREAM	1118.77	29.31	1121.21	1121.35	1122.77	1128.00	8.04	2.95
SLOPE(%)	0.245		0.073	0.107		-0.256		

		CATCHMENT	CUMULATIVE		
Area (ac)	=	0.0	0.0		
Drainage Time (min)	=	0.00	9.87		
Intensity (in/h)	=	0.00	4.39	TOTAL	UNIFORM
Runoff Coefficient	=	0.00	0.00	FLOW	CAPACITY
Rational Flow (cfs)	=	0.00	0.00	(cfs)	(cfs)
Known Flow (cfs)	=	23.70	23.70	23.70	61.67

STORM SEWER INLET REPORT

FLOW RESULTS (cfs)
Flow from Catchment = 0.00
Carryover from previous inlet = 0.00
Total flow to current inlet = 0.00
Intercepted by current inlet = 0.00
Bypassed by current inlet = 0.00

PONDING WIDTH (ft) = 0.00
DEPTH AT CURB (ft) = 0.00
EFFICIENCY (%)
Curb = *
Grate = * Total = -inf
Slot = *

INPUT PARAMETERS:
Inlet Type = NONE IN SAG
Gutter Width (ft) = 0.000
Inlet n-value = 0.016
Downstream Inlet number = 7
Longitudinal Slope (ft/ft) = 0.000
Pavement Cross Slope (ft/ft) = 0.000
Normal Gutter XSlope (ft/ft) = 0.000
Gutter depression (in) = 0.00

MAIN SDCP1 10YR STM/10YR TW

Data File : C1E10T10.STM Return Period: 10 Yrs

Rainfall file: PHX1.RND I = 50.790/ (Tc + 9.250) ^ 0.830

LINE 9 STORM SEWER HYDRAULIC REPORT

Diameter (in) = 48 N = 0.015 Critical Depth (in) = 17.27

Length (ft) = 217 Kj (JLC) = 1.0 Downstream Line # = 8

	INVERT (ft)	DEPTH (in)	HGL (ft)	EGL (ft)	CROWN (ft)	NAT GND (ft)	AREA (ft^2)	VEL (ft/s)
UPSTREAM	1119.99	22.70	1121.88	1122.14	1123.99	1129.10	5.85	4.05
DNSTREAM	1119.45	26.40	1121.65	1121.82	1123.45	1127.30	7.08	3.35
SLOPE(%)	0.249		0.107	0.144		0.829		

		CATCHMENT	CUMULATIVE		
Area (ac)	=	0.0	0.0		
Drainage Time (min)	=	0.00	8.89		
Intensity (in/h)	=	0.00	4.58	TOTAL	UNIFORM
Runoff Coefficient	=	0.00	0.00	FLOW	CAPACITY
Rational Flow (cfs)	=	0.00	0.00	(cfs)	(cfs)
Known Flow (cfs)	=	23.70	23.70	23.70	62.11

STORM SEWER INLET REPORT

FLOW RESULTS (cfs)

Flow from Catchment	=	0.00	PONDING WIDTH (ft)	=	0.00
Carryover from previous inlet	=	0.00	DEPTH AT CURB (ft)	=	0.00
Total flow to current inlet	=	0.00	EFFICIENCY (%)		
Intercepted by current inlet	=	0.00	Curb = *		
Bypassed by current inlet	=	0.00	Grate = *	Total =	-inf
			Slot = *		

INPUT PARAMETERS:

Inlet Type	= NONE IN SAG		Longitudinal Slope (ft/ft)	=	0.000
Gutter Width (ft)	=	0.000	Pavement Cross Slope (ft/ft)	=	0.000
Inlet n-value	=	0.016	Normal Gutter XSlope (ft/ft)	=	0.000
Downstream Inlet number	=	7	Gutter depression (in)	=	0.00

MAIN SDCP1 10YR STM/10YR TW

Data File : C1E10T10.STM Return Period: 10 Yrs

Rainfall file: PHX1.RND I = 50.790/ (Tc + 9.250) ^ 0.830

LINE 10 STORM SEWER HYDRAULIC REPORT

Diameter (in) = 48 N = 0.015 Critical Depth (in) = 16.41

Length (ft) = 60 Kj (JLC) = 0.9 Downstream Line # = 9

	INVERT (ft)	DEPTH (in)	HGL (ft)	EGL (ft)	CROWN (ft)	NAT GND (ft)	AREA (ft^2)	VEL (ft/s)
UPSTREAM	1120.14	24.20	1122.16	1122.33	1124.14	1129.00	6.35	3.37
DNSTREAM	1120.00	25.24	1122.10	1122.26	1124.00	1129.10	6.70	3.20
SLOPE(%)	0.233		0.089	0.119		-0.167		

		CATCHMENT	CUMULATIVE	TOTAL FLOW (cfs)	UNIFORM CAPACITY (cfs)
Area (ac)	=	0.0	0.0		
Drainage Time (min)	=	0.00	8.59		
Intensity (in/h)	=	0.00	4.65		
Runoff Coefficient	=	0.00	0.00		
Rational Flow (cfs)	=	0.00	0.00		
Known Flow (cfs)	=	21.40	21.40	21.40	60.14

STORM SEWER INLET REPORT

FLOW RESULTS (cfs)

Flow from Catchment	=	0.00	PONDING WIDTH (ft)	=	0.00
Carryover from previous inlet	=	0.00	DEPTH AT CURB (ft)	=	0.00
Total flow to current inlet	=	0.00	EFFICIENCY (%)		
Intercepted by current inlet	=	0.00	Curb = *		
Bypassed by current inlet	=	0.00	Grate = *	Total =	-inf
			Slot = *		

INPUT PARAMETERS:

Inlet Type	= NONE IN SAG		Longitudinal Slope (ft/ft)	=	0.000
Gutter Width (ft)	=	0.000	Pavement Cross Slope (ft/ft)	=	0.000
Inlet n-value	=	0.016	Normal Gutter XSlope (ft/ft)	=	0.000
Downstream Inlet number	=	8	Gutter depression (in)	=	0.00

MAIN SDCP1 10YR STM/10YR TW

Data File : C1E10T10.STM Return Period: 10 Yrs

Rainfall file: PHX1.RND I = 50.790/ (Tc + 9.250) ^ 0.830

LINE 11 STORM SEWER HYDRAULIC REPORT

Diameter (in) = 48 N = 0.015 Critical Depth (in) = 15.79

Length (ft) = 162 Kj (JLC) = 0.0 Downstream Line # = 10

	INVERT (ft)	DEPTH (in)	HGL (ft)	EGL (ft)	CROWN (ft)	NAT GND (ft)	AREA (ft^2)	VEL (ft/s)
UPSTREAM	1120.54	21.15	1122.30	1122.52	1124.54	1129.00	5.33	3.71
DNSTREAM	1120.15	24.15	1122.16	1122.31	1124.15	1129.00	6.33	3.13
SLOPE(%)	0.241		0.087	0.125		0.000		

		CATCHMENT	CUMULATIVE		
Area (ac)	=	0.0	0.0		
Drainage Time (min)	=	0.00	7.80		
Intensity (in/h)	=	0.00	4.82	TOTAL	UNIFORM
Runoff Coefficient	=	0.00	0.00	FLOW	CAPACITY
Rational Flow (cfs)	=	0.00	0.00	(cfs)	(cfs)
Known Flow (cfs)	=	19.80	19.80	19.80	61.08

STORM SEWER INLET REPORT

FLOW RESULTS (cfs)

Flow from Catchment	=	0.00	PONDING WIDTH (ft)	=	0.00
Carryover from previous inlet	=	0.00	DEPTH AT CURB (ft)	=	0.00
Total flow to current inlet	=	0.00	EFFICIENCY (%)		
Intercepted by current inlet	=	0.00	Curb = *		
Bypassed by current inlet	=	0.00	Grate = *	Total =	-inf
			Slot = *		

INPUT PARAMETERS:

Inlet Type	= NONE IN SAG		Longitudinal Slope (ft/ft)	=	0.000
Gutter Width (ft)	=	0.000	Pavement Cross Slope (ft/ft)	=	0.000
Inlet n-value	=	0.016	Normal Gutter XSlope (ft/ft)	=	0.000
Downstream Inlet number	=	10	Gutter depression (in)	=	0.00

MAIN SDCP1 10YR STM/10YR TW

Data File : C1E10T10.STM Return Period: 10 Yrs

Rainfall file: PHX1.RND I = 50.790/ (Tc + 9.250) ^ 0.830

LINE 12 STORM SEWER HYDRAULIC REPORT

Diameter (in) = 48 N = 0.015 Critical Depth (in) = 15.38

Length (ft) = 136 Kj (JLC) = 0.0 Downstream Line # = 11

	INVERT (ft)	DEPTH (in)	HGL (ft)	EGL (ft)	CROWN (ft)	NAT GND (ft)	AREA (ft^2)	VEL (ft/s)
UPSTREAM	1120.88	19.30	1122.49	1122.73	1124.88	1129.80	4.73	3.98
DNSTREAM	1120.55	21.10	1122.31	1122.50	1124.55	1129.00	5.32	3.53
SLOPE(%)	0.243		0.132	0.170		0.588		

		CATCHMENT	CUMULATIVE	TOTAL FLOW (cfs)	UNIFORM CAPACITY (cfs)
Area (ac)	=	0.0	0.0		
Drainage Time (min)	=	0.00	7.19		
Intensity (in/h)	=	0.00	4.97		
Runoff Coefficient	=	0.00	0.00		
Rational Flow (cfs)	=	0.00	0.00		
Known Flow (cfs)	=	18.80	18.80	18.80	61.32

STORM SEWER INLET REPORT

FLOW RESULTS (cfs)

Flow from Catchment	=	0.00
Carryover from previous inlet	=	0.00
Total flow to current inlet	=	0.00
Intercepted by current inlet	=	0.00
Bypassed by current inlet	=	0.00

PONDING WIDTH (ft) = 0.00

DEPTH AT CURB (ft) = 0.00

EFFICIENCY (%)

Curb = *

Grate = * Total = -inf

Slot = *

INPUT PARAMETERS:

Inlet Type	= NONE IN SAG	Longitudinal Slope (ft/ft)	= 0.000
Gutter Width (ft)	= 0.000	Pavement Cross Slope (ft/ft)	= 0.000
Inlet n-value	= 0.016	Normal Gutter XSlope (ft/ft)	= 0.000
Downstream Inlet number	= 9	Gutter depression (in)	= 0.00

MAIN SDCP1 10YR STM/10YR TW

Data File : C1E10T10.STM Return Period: 10 Yrs

Rainfall file: PHX1.RND I = 50.790/ (Tc + 9.250) ^ 0.830

LINE 13 STORM SEWER HYDRAULIC REPORT

Diameter (in) = 36 N = 0.015 Critical Depth (in) = 13.41

Length (ft) = 112 Kj (JLC) = 0.0 Downstream Line # = 12

	INVERT (ft)	DEPTH (in)	HGL (ft)	EGL (ft)	CROWN (ft)	NAT GND (ft)	AREA (ft^2)	VEL (ft/s)
UPSTREAM	1121.16	17.86	1122.65	1122.84	1124.16	1130.10	3.50	3.52
DNSTREAM	1120.89	19.27	1122.50	1122.65	1123.89	1129.80	3.85	3.19
SLOPE(%)	0.241		0.136	0.166		0.268		

		CATCHMENT	CUMULATIVE		
Area (ac)	=	0.0	0.0		
Drainage Time (min)	=	0.00	6.64		
Intensity (in/h)	=	0.00	5.12	TOTAL	UNIFORM
Runoff Coefficient	=	0.00	0.00	FLOW	CAPACITY
Rational Flow (cfs)	=	0.00	0.00	(cfs)	(cfs)
Known Flow (cfs)	=	12.30	12.30	12.30	28.38

STORM SEWER INLET REPORT

FLOW RESULTS (cfs)

Flow from Catchment	=	0.00	PONDING WIDTH (ft)	=	0.00
Carryover from previous inlet	=	0.00	DEPTH AT CURB (ft)	=	0.00
Total flow to current inlet	=	0.00	EFFICIENCY (%)		
Intercepted by current inlet	=	0.00	Curb = *		
Bypassed by current inlet	=	0.00	Grate = *	Total =	-inf
			Slot = *		

INPUT PARAMETERS:

Inlet Type	= NONE IN SAG		Longitudinal Slope (ft/ft)	=	0.000
Gutter Width (ft)	=	0.000	Pavement Cross Slope (ft/ft)	=	0.000
Inlet n-value	=	0.016	Normal Gutter XSlope (ft/ft)	=	0.000
Downstream Inlet number	=	10	Gutter depression (in)	=	0.00

MAIN SDCP1 10YR STM/10YR TW

Data File : C1E10T10.STM Return Period: 10 Yrs
Rainfall file: PHX1.RND I = 50.790/ (Tc + 9.250) ^ 0.830

LINE 14 STORM SEWER HYDRAULIC REPORT

Diameter (in) = 36 N = 0.015 Critical Depth (in) = 12.97
Length (ft) = 346 Kj (JLC) = 0.0 Downstream Line # = 13

	INVERT (ft)	DEPTH (in)	HGL (ft)	EGL (ft)	CROWN (ft)	NAT GND (ft)	AREA (ft^2)	VEL (ft/s)
UPSTREAM	1122.03	15.61	1123.33	1123.57	1125.03	1129.02	2.94	3.91
DNSTREAM	1121.17	17.81	1122.65	1122.82	1124.17	1130.10	3.49	3.30
SLOPE(%)	0.249		0.196	0.215		-0.312		

		CATCHMENT	CUMULATIVE	TOTAL FLOW (cfs)	UNIFORM CAPACITY (cfs)
Area (ac)	=	0.0	0.0		
Drainage Time (min)	=	0.00	5.04		
Intensity (in/h)	=	0.00	5.59		
Runoff Coefficient	=	0.00	0.00		
Rational Flow (cfs)	=	0.00	0.00		
Known Flow (cfs)	=	11.50	11.50	11.50	28.82

STORM SEWER INLET REPORT

FLOW RESULTS (cfs)
Flow from Catchment = 0.00
Carryover from previous inlet = 0.00
Total flow to current inlet = 0.00
Intercepted by current inlet = 0.00
Bypassed by current inlet = 0.00

PONDING WIDTH (ft) = 0.00
DEPTH AT CURB (ft) = 0.00
EFFICIENCY (%)
Curb = *
Grate = * Total = -inf
Slot = *

INPUT PARAMETERS:
Inlet Type = NONE IN SAG
Gutter Width (ft) = 0.000
Inlet n-value = 0.016
Downstream Inlet number = 11
Longitudinal Slope (ft/ft) = 0.000
Pavement Cross Slope (ft/ft) = 0.000
Normal Gutter XSlope (ft/ft) = 0.000
Gutter depression (in) = 0.00

MAIN SDCP1 10YR STM/10YR TW

Data File : C1E10T10.STM Return Period: 10 Yrs

Rainfall file: PHX1.RND I = 50.790/ (Tc + 9.250) ^ 0.830

LINE 15 STORM SEWER HYDRAULIC REPORT

Diameter (in) = 36 N = 0.015 Critical Depth (in) = 12.33

Length (ft) = 280 Kj (JLC) = 0.0 Downstream Line # = 14

	INVERT (ft)	DEPTH (in)	HGL (ft)	EGL (ft)	CROWN (ft)	NAT GND (ft)	AREA (ft^2)	VEL (ft/s)
UPSTREAM	1122.73	14.95	1123.98	1124.19	1125.73	1128.35	2.77	3.75
DNSTREAM	1122.04	15.60	1123.34	1123.53	1125.04	1129.02	2.94	3.54
SLOPE(%)	0.246		0.227	0.235		-0.239		

	CATCHMENT	CUMULATIVE		
Area (ac) =	0.0	0.0		
Drainage Time (min) =	0.00	3.76		
Intensity (in/h) =	0.00	6.04	TOTAL	UNIFORM
Runoff Coefficient =	0.00	0.00	FLOW	CAPACITY
Rational Flow (cfs) =	0.00	0.00	(cfs)	(cfs)
Known Flow (cfs) =	10.40	10.40	10.40	28.69

STORM SEWER INLET REPORT

FLOW RESULTS (cfs)

Flow from Catchment = 0.00

Carryover from previous inlet = 0.00

Total flow to current inlet = 0.00

Intercepted by current inlet = 0.00

Bypassed by current inlet = 0.00

PONDING WIDTH (ft) = 0.00

DEPTH AT CURB (ft) = 0.00

EFFICIENCY (%)

Curb = *

Grate = * Total = -inf

Slot = *

INPUT PARAMETERS:

Inlet Type = NONE IN SAG

Gutter Width (ft) = 0.000

Inlet n-value = 0.016

Downstream Inlet number = 12

Longitudinal Slope (ft/ft) = 0.000

Pavement Cross Slope (ft/ft) = 0.000

Normal Gutter XSlope (ft/ft) = 0.000

Gutter depression (in) = 0.00

E-114

MAIN SDCP1 10YR STM/10YR TW

Data File : C1E10T10.STM Return Period: 10 Yrs

Rainfall file: PHX1.RND I = 50.790/ (Tc + 9.250) ^ 0.830

LINE 16 STORM SEWER HYDRAULIC REPORT

Diameter (in) = 24 N = 0.015 Critical Depth (in) = 11.16

Length (ft) = 239 Kj (JLC) = 0.0 Downstream Line # = 15

	INVERT (ft)	DEPTH (in)	HGL (ft)	EGL (ft)	CROWN (ft)	NAT GND (ft)	AREA (ft^2)	VEL (ft/s)
UPSTREAM	1123.35	14.85	1124.59	1124.76	1125.35	1128.71	2.04	3.38
DNSTREAM	1122.74	14.93	1123.98	1124.16	1124.74	1128.35	2.05	3.36
SLOPE(%)	0.255		0.252	0.253		0.151		

		CATCHMENT	CUMULATIVE		
Area (ac)	=	0.0	0.0		
Drainage Time (min)	=	0.00	2.58		
Intensity (in/h)	=	0.00	6.54	TOTAL	UNIFORM
Runoff Coefficient	=	0.00	0.00	FLOW	CAPACITY
Rational Flow (cfs)	=	0.00	0.00	(cfs)	(cfs)
Known Flow (cfs)	=	6.90	6.90	6.90	9.90

STORM SEWER INLET REPORT

FLOW RESULTS (cfs)

Flow from Catchment	=	0.00	PONDING WIDTH (ft)	=	0.00
Carryover from previous inlet	=	0.00	DEPTH AT CURB (ft)	=	0.00
Total flow to current inlet	=	0.00	EFFICIENCY (%)		
Intercepted by current inlet	=	0.00	Curb = *		
Bypassed by current inlet	=	0.00	Grate = *	Total =	-inf
			Slot = *		

INPUT PARAMETERS:

Inlet Type	= NONE IN SAG		Longitudinal Slope (ft/ft)	=	0.000
Gutter Width (ft)	=	0.000	Pavement Cross Slope (ft/ft)	=	0.000
Inlet n-value	=	0.016	Normal Gutter XSlope (ft/ft)	=	0.000
Downstream Inlet number	=	13	Gutter depression (in)	=	0.00

MAIN SDCP1 10YR STM/10YR TW

Data File : C1E10T10.STM Return Period: 10 Yrs

Rainfall file: PHX1.RND I = 50.790/ (Tc + 9.250) ^ 0.830

LINE 17 STORM SEWER HYDRAULIC REPORT

Diameter (in) = 24 N = 0.015 Critical Depth (in) = 9.69

Length (ft) = 32 Kj (JLC) = 1.4 Downstream Line # = 16

	INVERT (ft)	DEPTH (in)	HGL (ft)	EGL (ft)	CROWN (ft)	NAT GND (ft)	AREA (ft^2)	VEL (ft/s)
UPSTREAM	1123.49	16.41	1124.86	1124.94	1125.49	1128.71	2.29	2.27
DNSTREAM	1123.39	17.44	1124.84	1124.91	1125.39	1128.71	2.44	2.13
SLOPE(%)	0.312		0.045	0.076		0.000		

		CATCHMENT	CUMULATIVE		
Area (ac)	=	0.0	0.0		
Drainage Time (min)	=	0.00	2.33		
Intensity (in/h)	=	0.00	6.65	TOTAL	UNIFORM
Runoff Coefficient	=	0.00	0.00	FLOW	CAPACITY
Rational Flow (cfs)	=	0.00	0.00	(cfs)	(cfs)
Known Flow (cfs)	=	5.20	5.20	5.20	10.96

STORM SEWER INLET REPORT

FLOW RESULTS (cfs)

Flow from Catchment = 0.00

Carryover from previous inlet = 0.00

Total flow to current inlet = 0.00

Intercepted by current inlet = 0.00

Bypassed by current inlet = 0.00

PONDING WIDTH (ft) = 0.00

DEPTH AT CURB (ft) = 0.00

EFFICIENCY (%)

Curb = *

Grate = * Total = -inf

Slot = *

INPUT PARAMETERS:

Inlet Type = NONE IN SAG

Gutter Width (ft) = 0.000

Inlet n-value = 0.016

Downstream Inlet number = 14

Longitudinal Slope (ft/ft) = 0.000

Pavement Cross Slope (ft/ft) = 0.000

Normal Gutter XSlope (ft/ft) = 0.000

Gutter depression (in) = 0.00

MAIN SDCP1 10YR STM/10YR TW

Data File : C1E10T10.STM Return Period: 10 Yrs
Rainfall file: PHX1.RND I = 50.790/ (Tc + 9.250) ^ 0.830

LINE 18 STORM SEWER HYDRAULIC REPORT

Diameter (in) = 24 N = 0.015 Critical Depth (in) = 6.85
Length (ft) = 118 Kj (JLC) = 0.4 Downstream Line # = 17

	INVERT (ft)	DEPTH (in)	HGL (ft)	EGL (ft)	CROWN (ft)	NAT GND (ft)	AREA (ft²)	VEL (ft/s)
UPSTREAM	1123.92	12.08	1124.93	1124.97	1125.92	1126.52	1.58	1.64
DNSTREAM	1123.49	16.84	1124.89	1124.91	1125.49	1128.71	2.36	1.10
SLOPE(%)	0.364		0.028	0.047		-1.856		

		CATCHMENT	CUMULATIVE	TOTAL FLOW (cfs)	UNIFORM CAPACITY (cfs)
Area (ac)	=	0.0	0.0		
Drainage Time (min)	=	0.00	0.90		
Intensity (in/h)	=	0.00	7.42		
Runoff Coefficient	=	0.00	0.00		
Rational Flow (cfs)	=	0.00	0.00		
Known Flow (cfs)	=	2.60	2.60	2.60	11.83

STORM SEWER INLET REPORT

FLOW RESULTS (cfs)
Flow from Catchment = 0.00
Carryover from previous inlet = 0.00
Total flow to current inlet = 0.00
Intercepted by current inlet = 0.00
Bypassed by current inlet = 0.00

PONDING WIDTH (ft) = 0.00
DEPTH AT CURB (ft) = 0.00
EFFICIENCY (%)
Curb = *
Grate = * Total = -inf
Slot = *

INPUT PARAMETERS:
Inlet Type = NONE IN SAG
Gutter Width (ft) = 0.000
Inlet n-value = 0.016
Downstream Inlet number = 15
Longitudinal Slope (ft/ft) = 0.000
Pavement Cross Slope (ft/ft) = 0.000
Normal Gutter XSlope (ft/ft) = 0.000
Gutter depression (in) = 0.00

MAIN SDCP1 10YR STM/10YR TW

Data File : C1E10T10.STM Return Period: 10 Yrs

Rainfall file: PHX1.RND I = 50.790/ (Tc + 9.250) ^ 0.830

LINE 19 STORM SEWER HYDRAULIC REPORT

Diameter (in) = 24 N = 0.015 Critical Depth (in) = 3.80

Length (ft) = 29 Kj (JLC) = 0.0 Downstream Line # = 18

	INVERT (ft)	DEPTH (in)	HGL (ft)	EGL (ft)	CROWN (ft)	NAT GND (ft)	AREA (ft^2)	VEL (ft/s)
UPSTREAM	1124.01	11.01	1124.93	1124.93	1126.01	1126.52	1.41	0.57
DNSTREAM	1123.92	12.10	1124.93	1124.93	1125.92	1126.52	1.59	0.50
SLOPE(%)	0.310		-0.001	0.002		0.000		

		CATCHMENT	CUMULATIVE		
Area (ac)	=	0.0	0.0		
Drainage Time (min)	=	0.00	0.00		
Intensity (in/h)	=	0.00	8.01	TOTAL	UNIFORM
Runoff Coefficient	=	0.00	0.00	FLOW	CAPACITY
Rational Flow (cfs)	=	0.00	0.00	(cfs)	(cfs)
Known Flow (cfs)	=	0.80	0.80	0.80	10.92

STORM SEWER INLET REPORT

FLOW RESULTS (cfs)

Flow from Catchment	=	0.00	PONDING WIDTH (ft)	=	0.00
Carryover from previous inlet	=	0.00	DEPTH AT CURB (ft)	=	0.00
Total flow to current inlet	=	0.00	EFFICIENCY (%)		
Intercepted by current inlet	=	0.00	Curb = *		
Bypassed by current inlet	=	0.00	Grate = *	Total =	-inf
			Slot = *		

INPUT PARAMETERS:

Inlet Type	= NONE IN SAG		Longitudinal Slope (ft/ft)	=	0.000
Gutter Width (ft)	=	0.000	Pavement Cross Slope (ft/ft)	=	0.000
Inlet n-value	=	0.016	Normal Gutter XSlope (ft/ft)	=	0.000
Downstream Inlet number	=	16	Gutter depression (in)	=	0.00

MAIN SDCP1 10YR STM/10YR TW

Data File : C1E10T10.STM Return Period: 10 Yrs

Rainfall file: PHX1.RND I = 50.790/ (Tc + 9.250) ^ 0.830

LINE 20 STORM SEWER HYDRAULIC REPORT

Diameter (in) = 24 N = 0.015 Critical Depth (in) = 3.80

Length (ft) = 0 Kj (JLC) = 1.0 Downstream Line # = 19

	INVERT (ft)	DEPTH (in)	HGL (ft)	EGL (ft)	CROWN (ft)	NAT GND (ft)	AREA (ft^2)	VEL (ft/s)
UPSTREAM	1124.02	11.01	1124.94	1124.95	1126.02	1126.52	1.41	0.57
DNSTREAM	1124.02	10.96	1124.93	1124.94	1126.02	1126.52	1.40	0.57
SLOPE(%)	0.000		100.098	99.419		0.000		

		CATCHMENT	CUMULATIVE		
Area (ac)	=	0.0	0.0		
Drainage Time (min)	=	0.00	0.00		
Intensity (in/h)	=	0.00	8.01	TOTAL	UNIFORM
Runoff Coefficient	=	0.00	0.00	FLOW	CAPACITY
Rational Flow (cfs)	=	0.00	0.00	(cfs)	(cfs)
Known Flow (cfs)	=	0.80	0.80	0.80	0.00

STORM SEWER INLET REPORT

FLOW RESULTS (cfs)

Flow from Catchment	=	0.00	PONDING WIDTH (ft)	=	0.00
Carryover from previous inlet	=	0.00	DEPTH AT CURB (ft)	=	0.00
Total flow to current inlet	=	0.00	EFFICIENCY (%)		
Intercepted by current inlet	=	0.00	Curb = *		
Bypassed by current inlet	=	0.00	Grate = *	Total =	-inf
			Slot = *		

INPUT PARAMETERS:

Inlet Type	= NONE IN SAG		Longitudinal Slope (ft/ft)	=	0.000
Gutter Width (ft)	=	0.000	Pavement Cross Slope (ft/ft)	=	0.000
Inlet n-value	=	0.016	Normal Gutter XSlope (ft/ft)	=	0.000
Downstream Inlet number	=	19	Gutter depression (in)	=	0.00

MAIN SDCP1 10YR STM/10YR TW

Data File : C1E10T10.STM Return Period: 10 Yrs

Rainfall file: PHX1.RND I = 50.790/ (Tc + 9.250) ^ 0.830

LINE 21 STORM SEWER HYDRAULIC REPORT

Diameter (in) = 24 N = 0.015 Critical Depth (in) = 10.70

Length (ft) = 64 Kj (JLC) = 1.3 Downstream Line # = 2

	INVERT (ft)	DEPTH (in)	HGL (ft)	EGL (ft)	CROWN (ft)	NAT GND (ft)	AREA (ft^2)	VEL (ft/s)
UPSTREAM	1136.76	10.70	1137.65	1137.99	1138.76	1142.26	1.35	4.68
DNSTREAM	1115.50	24.00	1120.96	1121.03	1117.50	1123.20	3.14	2.02
SLOPE(%)	35.219		26.073	26.506		29.781		

		CATCHMENT	CUMULATIVE		
Area (ac)	=	0.0	0.0		
Drainage Time (min)	=	0.00	0.30		
Intensity (in/h)	=	0.00	7.80	TOTAL	UNIFORM
Runoff Coefficient	=	0.00	0.00	FLOW	CAPACITY
Rational Flow (cfs)	=	0.00	0.00	(cfs)	(cfs)
Known Flow (cfs)	=	6.34	6.34	6.34	116.33

Note: Transitional flow exists in this line

STORM SEWER INLET REPORT

FLOW RESULTS (cfs)

Flow from Catchment	=	0.00
Carryover from previous inlet	=	0.00
Total flow to current inlet	=	0.00
Intercepted by current inlet	=	0.00
Bypassed by current inlet	=	0.00

PONDING WIDTH (ft) = 0.00

DEPTH AT CURB (ft) = 0.00

EFFICIENCY (%)

Curb = *

Grate = * Total = -inf

Slot = *

INPUT PARAMETERS:

Inlet Type	= NONE IN SAG	Longitudinal Slope (ft/ft)	= 0.000
Gutter Width (ft)	= 0.000	Pavement Cross Slope (ft/ft)	= 0.000
Inlet n-value	= 0.016	Normal Gutter XSlope (ft/ft)	= 0.000
Downstream Inlet number	= 20	Gutter depression (in)	= 0.00

MAIN SDCP1 10YR STM/10YR TW

Date File : C1E10T10.STM Return Period: 10 Yrs

Rainfall file: PHX1.RND I = 50.790/ (Tc + 9.250) ^ 0.830

LINE 22 STORM SEWER HYDRAULIC REPORT

Diameter (in) = 24 N = 0.015 Critical Depth (in) = 7.68

Length (ft) = 59 Kj (JLC) = 0.0 Downstream Line # = 21

	INVERT (ft)	DEPTH (in)	HGL (ft)	EGL (ft)	CROWN (ft)	NAT GND (ft)	AREA (ft^2)	VEL (ft/s)
UPSTREAM	1137.42	7.68	1138.07	1138.29	1139.42	1142.92	0.87	3.77
DNSTREAM	1136.86	9.66	1137.67	1137.78	1138.86	1142.26	1.18	2.76
SLOPE(%)	0.949		0.685	0.858		1.119		

		CATCHMENT	CUMULATIVE		
Area (ac)	=	0.0	0.0		
Drainage Time (min)	=	0.00	0.00		
Intensity (in/h)	=	0.00	8.01	TOTAL	UNIFORM
Runoff Coefficient	=	0.00	0.00	FLOW	CAPACITY
Rational Flow (cfs)	=	0.00	0.00	(cfs)	(cfs)
Known Flow (cfs)	=	3.27	3.27	3.27	19.10

STORM SEWER INLET REPORT

FLOW RESULTS (cfs)

Flow from Catchment	=	0.00	PONDING WIDTH (ft)	=	0.00
Carryover from previous inlet	=	0.00	DEPTH AT CURB (ft)	=	0.00
Total flow to current inlet	=	0.00	EFFICIENCY (%)		
Intercepted by current inlet	=	0.00	Curb = *		
Bypassed by current inlet	=	0.00	Grate = *	Total =	-inf
			Slot = *		

INPUT PARAMETERS:

Inlet Type	= NONE IN SAG		Longitudinal Slope (ft/ft)	=	0.000
Gutter Width (ft)	=	0.000	Pavement Cross Slope (ft/ft)	=	0.000
Inlet n-value	=	0.016	Normal Gutter XSlope (ft/ft)	=	0.000
Downstream Inlet number	=	21	Gutter depression (in)	=	0.00

MAIN SDCP1 10YR STM/10YR TW

Data File : C1E10T10.STM Return Period: 10 Yrs

Rainfall file: PHX1.RND I = 50.790/ (Tc + 9.250) ^ 0.830

LINE 23 STORM SEWER HYDRAULIC REPORT

Diameter (in) = 24 N = 0.015 Critical Depth (in) = 10.59

Length (ft) = 40 Kj (JLC) = 1.3 Downstream Line # = 3

	INVERT (ft)	DEPTH (in)	HGL (ft)	EGL (ft)	CROWN (ft)	NAT GND (ft)	AREA (ft^2)	VEL (ft/s)
UPSTREAM	1133.03	10.59	1133.91	1134.25	1135.03	1138.53	1.34	4.65
DNSTREAM	1116.67	24.00	1121.08	1121.14	1118.67	1124.15	3.14	1.98
SLOPE(%)	44.820		32.074	32.761		35.950		

		CATCHMENT	CUMULATIVE		
Area (ac)	=	0.0	0.0		
Drainage Time (min)	=	0.00	0.31		
Intensity (in/h)	=	0.00	7.80	TOTAL	UNIFORM
Runoff Coefficient	=	0.00	0.00	FLOW	CAPACITY
Rational Flow (cfs)	=	0.00	0.00	(cfs)	(cfs)
Known Flow (cfs)	=	6.21	6.21	6.21	131.23

Note: Transitional flow exists in this line

STORM SEWER INLET REPORT

FLOW RESULTS (cfs)

Flow from Catchment	=	0.00	PONDING WIDTH (ft)	=	0.00
Carryover from previous inlet	=	0.00	DEPTH AT CURB (ft)	=	0.00
Total flow to current inlet	=	0.00	EFFICIENCY (%)		
Intercepted by current inlet	=	0.00	Curb = *		
Bypassed by current inlet	=	0.00	Grate = *	Total =	-inf
			Slot = *		

INPUT PARAMETERS:

Inlet Type	= NONE IN SAG		Longitudinal Slope (ft/ft)	=	0.000
Gutter Width (ft)	=	0.000	Pavement Cross Slope (ft/ft)	=	0.000
Inlet n-value	=	0.016	Normal Gutter XSlope (ft/ft)	=	0.000
Downstream Inlet number	=	22	Gutter depression (in)	=	0.00

MAIN SDCP1 10YR STM/10YR TW

Data File : C1E10T10.STM Return Period: 10 Yrs

Rainfall file: PHX1.RND I = 50.790/ (Tc + 9.250) ^ 0.830

LINE 24 STORM SEWER HYDRAULIC REPORT

Diameter (in) = 24 N = 0.015 Critical Depth (in) = 7.54

Length (ft) = 59 Kj (JLC) = 0.0 Downstream Line # = 23

	INVERT (ft)	DEPTH (in)	HGL (ft)	EGL (ft)	CROWN (ft)	NAT GND (ft)	AREA (ft^2)	VEL (ft/s)
UPSTREAM	1133.74	7.54	1134.38	1134.59	1135.74	1139.24	0.85	3.73
DNSTREAM	1133.13	9.55	1133.93	1134.04	1135.13	1138.53	1.17	2.70
SLOPE(%)	1.034		0.765	0.938		1.203		

		CATCHMENT	CUMULATIVE		
Area (ac)	=	0.0	0.0		
Drainage Time (min)	=	0.00	0.00		
Intensity (in/h)	=	0.00	8.01	TOTAL	UNIFORM
Runoff Coefficient	=	0.00	0.00	FLOW	CAPACITY
Rational Flow (cfs)	=	0.00	0.00	(cfs)	(cfs)
Known Flow (cfs)	=	3.15	3.15	3.15	19.93

STORM SEWER INLET REPORT

FLOW RESULTS (cfs)

Flow from Catchment	=	0.00	PONDING WIDTH (ft)	=	0.00
Carryover from previous inlet	=	0.00	DEPTH AT CURB (ft)	=	0.00
Total flow to current inlet	=	0.00	EFFICIENCY (%)		
Intercepted by current inlet	=	0.00	Curb = *		
Bypassed by current inlet	=	0.00	Grate = *	Total =	-inf
			Slot = *		

INPUT PARAMETERS:

Inlet Type	= NONE IN SAG		Longitudinal Slope (ft/ft)	=	0.000
Gutter Width (ft)	=	0.000	Pavement Cross Slope (ft/ft)	=	0.000
Inlet n-value	=	0.016	Normal Gutter XSlope (ft/ft)	=	0.000
Downstream Inlet number	=	23	Gutter depression (in)	=	0.00

MAIN SDCP1 10YR STM/10YR TW

Data File : C1E10T10.STM Return Period: 10 Yrs

Rainfall file: PHX1.RND I = 50.790/ (Tc + 9.250) ^ 0.830

LINE 25 STORM SEWER HYDRAULIC REPORT

Diameter (in) = 24 N = 0.015 Critical Depth (in) = 5.42

Length (ft) = 39 Kj (JLC) = 1.3 Downstream Line # = 4

	INVERT (ft)	DEPTH (in)	HGL (ft)	EGL (ft)	CROWN (ft)	NAT GND (ft)	AREA (ft^2)	VEL (ft/s)
UPSTREAM	1130.95	5.42	1131.59	1131.74	1132.95	1136.45	0.53	3.06
DNSTREAM	1117.45	24.00	1121.13	1121.14	1119.45	1125.40	3.14	0.52
SLOPE(%)	36.896		26.819	27.181		28.333		

		CATCHMENT	CUMULATIVE		
Area (ac)	=	0.0	0.0		
Drainage Time (min)	=	0.00	0.00		
Intensity (in/h)	=	0.00	8.01	TOTAL	UNIFORM
Runoff Coefficient	=	0.00	0.00	FLOW	CAPACITY
Rational Flow (cfs)	=	0.00	0.00	(cfs)	(cfs)
Known Flow (cfs)	=	1.63	1.63	1.63	119.07

Note: Transitional flow exists in this line

STORM SEWER INLET REPORT

FLOW RESULTS (cfs)

Flow from Catchment	=	0.00	PONDING WIDTH (ft)	=	0.00
Carryover from previous inlet	=	0.00	DEPTH AT CURB (ft)	=	0.00
Total flow to current inlet	=	0.00	EFFICIENCY (%)		
Intercepted by current inlet	=	0.00	Curb = *		
Bypassed by current inlet	=	0.00	Grate = *	Total =	-inf
			Slot = *		

INPUT PARAMETERS:

Inlet Type	= NONE IN SAG		Longitudinal Slope (ft/ft)	=	0.000
Gutter Width (ft)	=	0.000	Pavement Cross Slope (ft/ft)	=	0.000
Inlet n-value	=	0.016	Normal Gutter XSlope (ft/ft)	=	0.000
Downstream Inlet number	=	24	Gutter depression (in)	=	0.00

MAIN SDCP1 10YR STM/10YR TW

Data File : C1E10T10.STM Return Period: 10 Yrs

Rainfall file: PHX1.RND I = 50.790/ (Tc + 9.250) ^ 0.830

LINE 26 STORM SEWER HYDRAULIC REPORT

Diameter (in) = 24 N = 0.015 Critical Depth (in) = 8.01

Length (ft) = 29 Kj (JLC) = 1.3 Downstream Line # = 5

	INVERT (ft)	DEPTH (in)	HGL (ft)	EGL (ft)	CROWN (ft)	NAT GND (ft)	AREA (ft^2)	VEL (ft/s)
UPSTREAM	1125.76	8.01	1126.43	1126.66	1127.76	1136.38	0.92	3.87
DNSTREAM	1117.70	24.00	1121.18	1121.20	1119.70	1125.45	3.14	1.13
SLOPE(%)	28.933		18.106	18.839		37.690		

		CATCHMENT	CUMULATIVE		
Area (ac)	=	0.0	0.0		
Drainage Time (min)	=	0.00	0.62		
Intensity (in/h)	=	0.00	7.59	TOTAL	UNIFORM
Runoff Coefficient	=	0.00	0.00	FLOW	CAPACITY
Rational Flow (cfs)	=	0.00	0.00	(cfs)	(cfs)
Known Flow (cfs)	=	3.55	3.55	3.55	105.44

Note: Transitional flow exists in this line

STORM SEWER INLET REPORT

FLOW RESULTS (cfs)

Flow from Catchment	=	0.00	PONDING WIDTH (ft)	=	0.00
Carryover from previous inlet	=	0.00	DEPTH AT CURB (ft)	=	0.00
Total flow to current inlet	=	0.00	EFFICIENCY (%)		
Intercepted by current inlet	=	0.00	Curb = *		
Bypassed by current inlet	=	0.00	Grate = *	Total =	-inf
			Slot = *		

INPUT PARAMETERS:

Inlet Type	=	NONE IN SAG	Longitudinal Slope (ft/ft)	=	0.000
Gutter Width (ft)	=	0.000	Pavement Cross Slope (ft/ft)	=	0.000
Inlet n-value	=	0.016	Normal Gutter XSlope (ft/ft)	=	0.000
Downstream Inlet number	=	24	Gutter depression (in)	=	0.00

MAIN SDCP1 10YR STM/10YR TW

Data File : C1E10T10.STM Return Period: 10 Yrs

Rainfall file: PHX1.RND I = 50.790/ (Tc + 9.250) ^ 0.830

LINE 27 STORM SEWER HYDRAULIC REPORT

Diameter (in) = 24 N = 0.015 Critical Depth (in) = 8.01

Length (ft) = 139 Kj (JLC) = 0.0 Downstream Line # = 26

	INVERT (ft)	DEPTH (in)	HGL (ft)	EGL (ft)	CROWN (ft)	NAT GND (ft)	AREA (ft^2)	VEL (ft/s)
UPSTREAM	1126.46	8.35	1127.16	1127.37	1128.46	1131.96	0.97	3.65
DNSTREAM	1125.76	8.12	1126.44	1126.66	1127.76	1136.38	0.94	3.80
SLOPE(%)	0.504		0.523	0.511		-3.180		

		CATCHMENT	CUMULATIVE		
Area (ac)	=	0.0	0.0		
Drainage Time (min)	=	0.00	0.00		
Intensity (in/h)	=	0.00	8.01	TOTAL	UNIFORM
Runoff Coefficient	=	0.00	0.00	FLOW	CAPACITY
Rational Flow (cfs)	=	0.00	0.00	(cfs)	(cfs)
Known Flow (cfs)	=	3.55	3.55	3.55	13.91

STORM SEWER INLET REPORT

FLOW RESULTS (cfs)

Flow from Catchment	=	0.00	PONDING WIDTH (ft)	=	0.00
Carryover from previous inlet	=	0.00	DEPTH AT CURB (ft)	=	0.00
Total flow to current inlet	=	0.00	EFFICIENCY (%)		
Intercepted by current inlet	=	0.00	Curb = *		
Bypassed by current inlet	=	0.00	Grate = *	Total =	-inf
			Slot = *		

INPUT PARAMETERS:

Inlet Type	= NONE IN SAG		Longitudinal Slope (ft/ft)	=	0.000
Gutter Width (ft)	=	0.000	Pavement Cross Slope (ft/ft)	=	0.000
Inlet n-value	=	0.016	Normal Gutter XSlope (ft/ft)	=	0.000
Downstream Inlet number	=	25	Gutter depression (in)	=	0.00

MAIN SDCP1 10YR STM/10YR TW

Data File : C1E10T10.STM Return Period: 10 Yrs
Rainfall file: PHX1.RND I = 50.790/ (Tc + 9.250) ^ 0.830

LINE 28 STORM SEWER HYDRAULIC REPORT

Diameter (in) = 24 N = 0.015 Critical Depth (in) = 15.33
Length (ft) = 97 Kj (JLC) = 1.3 Downstream Line # = 7

	INVERT (ft)	DEPTH (in)	HGL (ft)	EGL (ft)	CROWN (ft)	NAT GND (ft)	AREA (ft²)	VEL (ft/s)
UPSTREAM	1120.73	15.33	1122.01	1122.59	1122.73	1129.55	2.12	6.14
DNSTREAM	1118.14	24.00	1121.30	1121.57	1120.14	1128.00	3.14	4.14
SLOPE(%)	2.671		0.728	1.058		1.598		

		CATCHMENT	CUMULATIVE		
Area (ac)	=	0.0	0.0		
Drainage Time (min)	=	0.00	0.41		
Intensity (in/h)	=	0.00	7.73	TOTAL	UNIFORM
Runoff Coefficient	=	0.00	0.00	FLOW	CAPACITY
Rational Flow (cfs)	=	0.00	0.00	(cfs)	(cfs)
Known Flow (cfs)	=	13.01	13.01	13.01	32.04

Note: Transitional flow exists in this line

STORM SEWER INLET REPORT

FLOW RESULTS (cfs)
Flow from Catchment = 0.00
Carryover from previous inlet = 0.00
Total flow to current inlet = 0.00
Intercepted by current inlet = 0.00
Bypassed by current inlet = 0.00

PONDING WIDTH (ft) = 0.00
DEPTH AT CURB (ft) = 0.00
EFFICIENCY (%)
Curb = *
Grate = * Total = -inf
Slot = *

INPUT PARAMETERS:
Inlet Type = NONE IN SAG
Gutter Width (ft) = 0.000
Inlet n-value = 0.016
Downstream Inlet number = 26
Longitudinal Slope (ft/ft) = 0.000
Pavement Cross Slope (ft/ft) = 0.000
Normal Gutter XSlope (ft/ft) = 0.000
Gutter depression (in) = 0.00

MAIN SDCP1 10YR STM/10YR TW

Data File : C1E10T10.STM Return Period: 10 Yrs

Rainfall file: PHX1.RND I = 50.790/ (Tc + 9.250) ^ 0.830

LINE 29 STORM SEWER HYDRAULIC REPORT

Diameter (in) = 24 N = 0.015 Critical Depth (in) = 10.92

Length (ft) = 95 Kj (JLC) = 0.0 Downstream Line # = 28

	INVERT (ft)	DEPTH (in)	HGL (ft)	EGL (ft)	CROWN (ft)	NAT GND (ft)	AREA (ft^2)	VEL (ft/s)
UPSTREAM	1121.30	11.51	1122.27	1122.58	1123.30	1126.80	1.49	4.43
DNSTREAM	1120.83	14.41	1122.03	1122.20	1122.83	1129.55	1.97	3.35
SLOPE(%)	0.495		0.254	0.391		-2.895		

		CATCHMENT	CUMULATIVE		
Area (ac)	=	0.0	0.0		
Drainage Time (min)	=	0.00	0.00		
Intensity (in/h)	=	0.00	8.01	TOTAL	UNIFORM
Runoff Coefficient	=	0.00	0.00	FLOW	CAPACITY
Rational Flow (cfs)	=	0.00	0.00	(cfs)	(cfs)
Known Flow (cfs)	=	6.60	6.60	6.60	13.79

STORM SEWER INLET REPORT

FLOW RESULTS (cfs)

Flow from Catchment	=	0.00	PONDING WIDTH (ft)	=	0.00
Carryover from previous inlet	=	0.00	DEPTH AT CURB (ft)	=	0.00
Total flow to current inlet	=	0.00	EFFICIENCY (%)		
Intercepted by current inlet	=	0.00	Curb = *		
Bypassed by current inlet	=	0.00	Grate = *	Total =	-inf
			Slot = *		

INPUT PARAMETERS:

Inlet Type	= NONE IN SAG		Longitudinal Slope (ft/ft)	=	0.000
Gutter Width (ft)	=	0.000	Pavement Cross Slope (ft/ft)	=	0.000
Inlet n-value	=	0.016	Normal Gutter XSlope (ft/ft)	=	0.000
Downstream Inlet number	=	27	Gutter depression (in)	=	0.00

MAIN SDCP1 10YR STM/10YR TW

Data File : C1E10T10.STM Return Period: 10 Yrs

Rainfall file: PHX1.RND I = 50.790/ (Tc + 9.250) ^ 0.830

LINE 30 STORM SEWER HYDRAULIC REPORT

Diameter (in) = 24 N = 0.015 Critical Depth (in) = 10.29

Length (ft) = 160 Kj (JLC) = 1.3 Downstream Line # = 9

	INVERT (ft)	DEPTH (in)	HGL (ft)	EGL (ft)	CROWN (ft)	NAT GND (ft)	AREA (ft^2)	VEL (ft/s)
UPSTREAM	1121.70	10.28	1122.56	1122.88	1123.70	1129.50	1.29	4.56
DNSTREAM	1120.10	24.00	1122.21	1122.27	1122.10	1129.10	3.14	1.87
SLOPE(%)	1.000		0.215	0.383		0.250		

		CATCHMENT	CUMULATIVE		
Area (ac)	=	0.0	0.0		
Drainage Time (min)	=	0.00	0.68		
Intensity (in/h)	=	0.00	7.56	TOTAL	UNIFORM
Runoff Coefficient	=	0.00	0.00	FLOW	CAPACITY
Rational Flow (cfs)	=	0.00	0.00	(cfs)	(cfs)
Known Flow (cfs)	=	5.86	5.86	5.86	19.60

Note: Transitional flow exists in this line

STORM SEWER INLET REPORT

FLOW RESULTS (cfs)

Flow from Catchment	=	0.00	PONDING WIDTH (ft)	=	0.00
Carryover from previous inlet	=	0.00	DEPTH AT CURB (ft)	=	0.00
Total flow to current inlet	=	0.00	EFFICIENCY (%)		
Intercepted by current inlet	=	0.00	Curb = *		
Bypassed by current inlet	=	0.00	Grate = *	Total =	-inf
			Slot = *		

INPUT PARAMETERS:

Inlet Type	= NONE IN SAG		Longitudinal Slope (ft/ft)	=	0.000
Gutter Width (ft)	=	0.000	Pavement Cross Slope (ft/ft)	=	0.000
Inlet n-value	=	0.016	Normal Gutter XSlope (ft/ft)	=	0.000
Downstream Inlet number	=	28	Gutter depression (in)	=	0.00

MAIN SDCP1 10YR STM/10YR TW

Data File : C1E10T10.STM Return Period: 10 Yrs

Rainfall file: PHX1.RND I = 50.790/ (Tc + 9.250) ^ 0.830

LINE 31 STORM SEWER HYDRAULIC REPORT

Diameter (in) = 24 N = 0.015 Critical Depth (in) = 4.37

Length (ft) = 65 Kj (JLC) = 1.3 Downstream Line # = 30

	INVERT (ft)	DEPTH (in)	HGL (ft)	EGL (ft)	CROWN (ft)	NAT GND (ft)	AREA (ft²)	VEL (ft/s)
UPSTREAM	1124.07	4.37	1124.58	1124.70	1126.07	1129.57	0.39	2.71
DNSTREAM	1121.70	15.31	1122.98	1122.98	1123.70	1129.50	2.12	0.50
SLOPE(%)	3.649		2.471	2.640		0.108		

		CATCHMENT	CUMULATIVE		
Area (ac)	=	0.0	0.0		
Drainage Time (min)	=	0.00	0.00		
Intensity (in/h)	=	0.00	8.01	TOTAL	UNIFORM
Runoff Coefficient	=	0.00	0.00	FLOW	CAPACITY
Rational Flow (cfs)	=	0.00	0.00	(cfs)	(cfs)
Known Flow (cfs)	=	1.06	1.06	1.06	37.44

STORM SEWER INLET REPORT

FLOW RESULTS (cfs)

Flow from Catchment	=	0.00	PONDING WIDTH (ft)	=	0.00
Carryover from previous inlet	=	0.00	DEPTH AT CURB (ft)	=	0.00
Total flow to current inlet	=	0.00	EFFICIENCY (%)		
Intercepted by current inlet	=	0.00	Curb = *		
Bypassed by current inlet	=	0.00	Grate = *	Total =	-inf
			Slot = *		

INPUT PARAMETERS:

Inlet Type	= NONE IN SAG		Longitudinal Slope (ft/ft)	=	0.000
Gutter Width (ft)	=	0.000	Pavement Cross Slope (ft/ft)	=	0.000
Inlet n-value	=	0.016	Normal Gutter XSlope (ft/ft)	=	0.000
Downstream Inlet number	=	29	Gutter depression (in)	=	0.00

MAIN SDCP1 10YR STM/10YR TW

Data File : C1E10T10.STM Return Period: 10 Yrs

Rainfall file: PHX1.RND I = 50.790/ (Tc + 9.250) ^ 0.830

LINE 32 STORM SEWER HYDRAULIC REPORT

Diameter (in) = 36 N = 0.015 Critical Depth (in) = 17.19

Length (ft) = 9 Kj (JLC) = 1.0 Downstream Line # = 10

	INVERT (ft)	DEPTH (in)	HGL (ft)	EGL (ft)	CROWN (ft)	NAT GND (ft)	AREA (ft²)	VEL (ft/s)
UPSTREAM	1120.60	17.37	1122.60	1123.16	1123.60	1125.25	3.38	5.98
DNSTREAM	1120.12	26.56	1122.33	1122.54	1123.12	1129.00	5.59	3.61
SLOPE(%)	5.341		2.999	6.924		-41.667		

		CATCHMENT	CUMULATIVE	TOTAL FLOW (cfs)	UNIFORM CAPACITY (cfs)
Area (ac)	=	0.0	0.0		
Drainage Time (min)	=	0.00	0.00		
Intensity (in/h)	=	0.00	8.01		
Runoff Coefficient	=	0.00	0.00		
Rational Flow (cfs)	=	0.00	0.00		
Known Flow (cfs)	=	20.20	20.20	20.20	133.58

STORM SEWER INLET REPORT

FLOW RESULTS (cfs)

Flow from Catchment	=	0.00
Carryover from previous inlet	=	0.00
Total flow to current inlet	=	0.00
Intercepted by current inlet	=	0.00
Bypassed by current inlet	=	0.00

PONDING WIDTH (ft) = 0.00

DEPTH AT CURB (ft) = 0.00

EFFICIENCY (%)

Curb = *

Grate = * Total = -inf

Slot = *

INPUT PARAMETERS:

Inlet Type	= NONE IN SAG	Longitudinal Slope (ft/ft)	= 0.000
Gutter Width (ft)	= 0.000	Pavement Cross Slope (ft/ft)	= 0.000
Inlet n-value	= 0.016	Normal Gutter XSlope (ft/ft)	= 0.000
Downstream Inlet number	= 30	Gutter depression (in)	= 0.00

MAIN SDCP1 10YR STM/10YR TW

Data File : C1E10T10.STM Return Period: 10 Yrs

Rainfall file: PHX1.RND I = 50.790/ (Tc + 9.250) ^ 0.830

LINE 33 STORM SEWER HYDRAULIC REPORT

Diameter (in) = 24 N = 0.015 Critical Depth (in) = 5.36

Length (ft) = 114 Kj (JLC) = 1.3 Downstream Line # = 10

	INVERT (ft)	DEPTH (in)	HGL (ft)	EGL (ft)	CROWN (ft)	NAT GND (ft)	AREA (ft^2)	VEL (ft/s)
UPSTREAM	1126.09	5.36	1126.72	1126.87	1128.09	1131.59	0.52	3.04
DNSTREAM	1120.96	17.11	1122.39	1122.39	1122.96	1129.00	2.40	0.66
SLOPE(%)	4.505		3.804	3.924		2.272		

		CATCHMENT	CUMULATIVE		
Area (ac)	=	0.0	0.0		
Drainage Time (min)	=	0.00	0.00		
Intensity (in/h)	=	0.00	8.01	TOTAL	UNIFORM
Runoff Coefficient	=	0.00	0.00	FLOW	CAPACITY
Rational Flow (cfs)	=	0.00	0.00	(cfs)	(cfs)
Known Flow (cfs)	=	1.59	1.59	1.59	41.60

STORM SEWER INLET REPORT

FLOW RESULTS (cfs)

Flow from Catchment	=	0.00	PONDING WIDTH (ft)	=	0.00
Carryover from previous inlet	=	0.00	DEPTH AT CURB (ft)	=	0.00
Total flow to current inlet	=	0.00	EFFICIENCY (%)		
Intercepted by current inlet	=	0.00	Curb = *		
Bypassed by current inlet	=	0.00	Grate = *	Total =	-inf
			Slot = *		

INPUT PARAMETERS:

Inlet Type	=	NONE IN SAG	Longitudinal Slope (ft/ft)	=	0.000
Gutter Width (ft)	=	0.000	Pavement Cross Slope (ft/ft)	=	0.000
Inlet n-value	=	0.016	Normal Gutter XSlope (ft/ft)	=	0.000
Downstream Inlet number	=	31	Gutter depression (in)	=	0.00

MAIN SDCP1 10YR STM/10YR TW

Data File : C1E10T10.STM Return Period: 10 Yrs
Rainfall file: PHX1.RND I = 50.790/ (Tc + 9.250) ^ 0.830

LINE 34 STORM SEWER HYDRAULIC REPORT

Diameter (in) = 24 N = 0.015 Critical Depth (in) = 4.29
Length (ft) = 43 Kj (JLC) = 1.3 Downstream Line # = 11

	INVERT (ft)	DEPTH (in)	HGL (ft)	EGL (ft)	CROWN (ft)	NAT GND (ft)	AREA (ft^2)	VEL (ft/s)
UPSTREAM	1124.50	4.29	1125.00	1125.11	1126.50	1130.00	0.38	2.68
DNSTREAM	1121.41	14.04	1122.58	1122.58	1123.41	1129.00	1.91	0.53
SLOPE(%)	7.205		5.632	5.881		2.326		

		CATCHMENT	CUMULATIVE		
Area (ac)	=	0.0	0.0		
Drainage Time (min)	=	0.00	0.00		
Intensity (in/h)	=	0.00	8.01	TOTAL	UNIFORM
Runoff Coefficient	=	0.00	0.00	FLOW	CAPACITY
Rational Flow (cfs)	=	0.00	0.00	(cfs)	(cfs)
Known Flow (cfs)	=	1.02	1.02	1.02	52.61

STORM SEWER INLET REPORT

FLOW RESULTS (cfs)
- Flow from Catchment = 0.00
- Carryover from previous inlet = 0.00
- Total flow to current inlet = 0.00
- Intercepted by current inlet = 0.00
- Bypassed by current inlet = 0.00

PONDING WIDTH (ft) = 0.00
DEPTH AT CURB (ft) = 0.00
EFFICIENCY (%)
- Curb = *
- Grate = * Total = -inf
- Slot = *

INPUT PARAMETERS:

Inlet Type	= NONE IN SAG	Longitudinal Slope (ft/ft)	= 0.000
Gutter Width (ft)	= 0.000	Pavement Cross Slope (ft/ft)	= 0.000
Inlet n-value	= 0.016	Normal Gutter XSlope (ft/ft)	= 0.000
Downstream Inlet number	= 32	Gutter depression (in)	= 0.00

MAIN SDCP1 10YR STM/10YR TW

Data File : C1E10T10.STM Return Period: 10 Yrs

Rainfall file: PHX1.RND I = 50.790/ (Tc + 9.250) ^ 0.830

LINE 35 STORM SEWER HYDRAULIC REPORT

Diameter (in) = 24 N = 0.015 Critical Depth (in) = 10.82

Length (ft) = 125 Kj (JLC) = 1.3 Downstream Line # = 12

	INVERT (ft)	DEPTH (in)	HGL (ft)	EGL (ft)	CROWN (ft)	NAT GND (ft)	AREA (ft^2)	VEL (ft/s)
UPSTREAM	1122.68	10.82	1123.58	1123.93	1124.68	1133.20	1.38	4.72
DNSTREAM	1121.65	13.89	1122.81	1122.99	1123.65	1129.80	1.88	3.44
SLOPE(%)	0.824		0.620	0.749		2.720		

		CATCHMENT	CUMULATIVE		
Area (ac)	=	0.0	0.0		
Drainage Time (min)	=	0.00	0.52		
Intensity (in/h)	=	0.00	7.66	TOTAL	UNIFORM
Runoff Coefficient	=	0.00	0.00	FLOW	CAPACITY
Rational Flow (cfs)	=	0.00	0.00	(cfs)	(cfs)
Known Flow (cfs)	=	6.49	6.49	6.49	17.79

STORM SEWER INLET REPORT

FLOW RESULTS (cfs)

Flow from Catchment	=	0.00	PONDING WIDTH (ft)	=	0.00
Carryover from previous inlet	=	0.00	DEPTH AT CURB (ft)	=	0.00
Total flow to current inlet	=	0.00	EFFICIENCY (%)		
Intercepted by current inlet	=	0.00	Curb = *		
Bypassed by current inlet	=	0.00	Grate = *	Total =	-inf
			Slot = *		

INPUT PARAMETERS:

Inlet Type	=	NONE IN SAG	Longitudinal Slope (ft/ft)	=	0.000
Gutter Width (ft)	=	0.000	Pavement Cross Slope (ft/ft)	=	0.000
Inlet n-value	=	0.016	Normal Gutter XSlope (ft/ft)	=	0.000
Downstream Inlet number	=	33	Gutter depression (in)	=	0.00

MAIN SDCP1 10YR STM/10YR TW

Data File : C1E10T10.STM Return Period: 10 Yrs

Rainfall file: PHX1.RND I = 50.790/ (Tc + 9.250) ^ 0.830

LINE 36 STORM SEWER HYDRAULIC REPORT

Diameter (in) = 24 N = 0.015 Critical Depth (in) = 8.75

Length (ft) = 51 Kj (JLC) = 0.0 Downstream Line # = 35

	INVERT (ft)	DEPTH (in)	HGL (ft)	EGL (ft)	CROWN (ft)	NAT GND (ft)	AREA (ft^2)	VEL (ft/s)
UPSTREAM	1124.04	9.33	1124.82	1125.04	1126.04	1132.58	1.13	3.75
DNSTREAM	1123.78	8.75	1124.51	1124.77	1125.78	1133.20	1.04	4.09
SLOPE(%)	0.510		0.605	0.523		-1.216		

		CATCHMENT	CUMULATIVE		
Area (ac)	=	0.0	0.0		
Drainage Time (min)	=	0.00	0.31		
Intensity (in/h)	=	0.00	7.80	TOTAL	UNIFORM
Runoff Coefficient	=	0.00	0.00	FLOW	CAPACITY
Rational Flow (cfs)	=	0.00	0.00	(cfs)	(cfs)
Known Flow (cfs)	=	4.24	4.24	4.24	14.00

STORM SEWER INLET REPORT

FLOW RESULTS (cfs)

Flow from Catchment	=	0.00	PONDING WIDTH (ft)	=	0.00
Carryover from previous inlet	=	0.00	DEPTH AT CURB (ft)	=	0.00
Total flow to current inlet	=	0.00	EFFICIENCY (%)		
Intercepted by current inlet	=	0.00	Curb = *		
Bypassed by current inlet	=	0.00	Grate = *	Total =	-inf
			Slot = *		

INPUT PARAMETERS:

Inlet Type	= NONE IN SAG		Longitudinal Slope (ft/ft)	=	0.000
Gutter Width (ft)	=	0.000	Pavement Cross Slope (ft/ft)	=	0.000
Inlet n-value	=	0.016	Normal Gutter XSlope (ft/ft)	=	0.000
Downstream Inlet number	=	34	Gutter depression (in)	=	0.00

MAIN SDCP1 10YR STM/10YR TW

Data File : C1E10T10.STM Return Period: 10 Yrs

Rainfall file: PHX1.RND I = 50.790/ (Tc + 9.250) ^ 0.830

LINE 37 STORM SEWER HYDRAULIC REPORT

Diameter (in) = 24 N = 0.015 Critical Depth (in) = 6.81

Length (ft) = 57 Kj (JLC) = 0.0 Downstream Line # = 36

	INVERT (ft)	DEPTH (in)	HGL (ft)	EGL (ft)	CROWN (ft)	NAT GND (ft)	AREA (ft^2)	VEL (ft/s)
UPSTREAM	1124.43	6.92	1125.01	1125.19	1126.43	1129.93	0.75	3.43
DNSTREAM	1124.14	8.13	1124.82	1124.93	1126.14	1132.58	0.94	2.74
SLOPE(%)	0.509		0.332	0.447		-4.649		

		CATCHMENT	CUMULATIVE		
Area (ac)	=	0.0	0.0		
Drainage Time (min)	=	0.00	0.00		
Intensity (in/h)	=	0.00	8.01	TOTAL	UNIFORM
Runoff Coefficient	=	0.00	0.00	FLOW	CAPACITY
Rational Flow (cfs)	=	0.00	0.00	(cfs)	(cfs)
Known Flow (cfs)	=	2.57	2.57	2.57	13.98

STORM SEWER INLET REPORT

FLOW RESULTS (cfs)

Flow from Catchment	=	0.00	PONDING WIDTH (ft)	=	0.00
Carryover from previous inlet	=	0.00	DEPTH AT CURB (ft)	=	0.00
Total flow to current inlet	=	0.00	EFFICIENCY (%)		
Intercepted by current inlet	=	0.00	Curb = *		
Bypassed by current inlet	=	0.00	Grate = *	Total =	-inf
			Slot = *		

INPUT PARAMETERS:

Inlet Type	=	NONE IN SAG	Longitudinal Slope (ft/ft)	=	0.000
Gutter Width (ft)	=	0.000	Pavement Cross Slope (ft/ft)	=	0.000
Inlet n-value	=	0.016	Normal Gutter XSlope (ft/ft)	=	0.000
Downstream Inlet number	=	35	Gutter depression (in)	=	0.00

MAIN SDCP1 10YR STM/10YR TW

Data File : C1E10T10.STM Return Period: 10 Yrs

Rainfall file: PHX1.RND I = 50.790/ (Tc + 9.250) ^ 0.830

LINE 38 STORM SEWER HYDRAULIC REPORT

Diameter (in) = 24 N = 0.015 Critical Depth (in) = 3.70

Length (ft) = 39 Kj (JLC) = 1.3 Downstream Line # = 13

	INVERT (ft)	DEPTH (in)	HGL (ft)	EGL (ft)	CROWN (ft)	NAT GND (ft)	AREA (ft^2)	VEL (ft/s)
UPSTREAM	1124.72	3.70	1125.15	1125.25	1126.72	1130.22	0.31	2.47
DNSTREAM	1121.42	17.73	1122.90	1122.90	1123.42	1130.10	2.49	0.31
SLOPE(%)	8.492		5.779	6.018		0.308		

		CATCHMENT	CUMULATIVE		
Area (ac)	=	0.0	0.0		
Drainage Time (min)	=	0.00	0.00		
Intensity (in/h)	=	0.00	8.01	TOTAL	UNIFORM
Runoff Coefficient	=	0.00	0.00	FLOW	CAPACITY
Rational Flow (cfs)	=	0.00	0.00	(cfs)	(cfs)
Known Flow (cfs)	=	0.76	0.76	0.76	57.12

STORM SEWER INLET REPORT

FLOW RESULTS (cfs)

Flow from Catchment	=	0.00
Carryover from previous inlet	=	0.00
Total flow to current inlet	=	0.00
Intercepted by current inlet	=	0.00
Bypassed by current inlet	=	0.00

PONDING WIDTH (ft) = 0.00

DEPTH AT CURB (ft) = 0.00

EFFICIENCY (%)

Curb = *

Grate = * Total = -inf

Slot = *

INPUT PARAMETERS:

Inlet Type	= NONE IN SAG	Longitudinal Slope (ft/ft)	= 0.000
Gutter Width (ft)	= 0.000	Pavement Cross Slope (ft/ft)	= 0.000
Inlet n-value	= 0.016	Normal Gutter XSlope (ft/ft)	= 0.000
Downstream Inlet number	= 36	Gutter depression (in)	= 0.00

MAIN SDCP1 10YR STM/10YR TW

Data File : C1E10T10.STM Return Period: 10 Yrs

Rainfall file: PHX1.RND I = 50.790/ (Tc + 9.250) ^ 0.830

LINE 39 STORM SEWER HYDRAULIC REPORT

Diameter (in) = 24 N = 0.015 Critical Depth (in) = 7.89

Length (ft) = 12 Kj (JLC) = 1.3 Downstream Line # = 15

	INVERT (ft)	DEPTH (in)	HGL (ft)	EGL (ft)	CROWN (ft)	NAT GND (ft)	AREA (ft^2)	VEL (ft/s)
UPSTREAM	1122.90	16.23	1124.30	1124.34	1124.90	1127.98	2.26	1.53
DNSTREAM	1122.84	17.03	1124.26	1124.29	1124.84	1128.35	2.38	1.45
SLOPE(%)	0.500		0.339	0.369		-3.083		

		CATCHMENT	CUMULATIVE		
Area (ac)	=	0.0	0.0		
Drainage Time (min)	=	0.00	0.00		
Intensity (in/h)	=	0.00	8.01	TOTAL	UNIFORM
Runoff Coefficient	=	0.00	0.00	FLOW	CAPACITY
Rational Flow (cfs)	=	0.00	0.00	(cfs)	(cfs)
Known Flow (cfs)	=	3.45	3.45	3.45	13.87

STORM SEWER INLET REPORT

FLOW RESULTS (cfs)

Flow from Catchment	=	0.00
Carryover from previous inlet	=	0.00
Total flow to current inlet	=	0.00
Intercepted by current inlet	=	0.00
Bypassed by current inlet	=	0.00

PONDING WIDTH (ft) = 0.00

DEPTH AT CURB (ft) = 0.00

EFFICIENCY (%)

Curb = *

Grate = * Total = -inf

Slot = *

INPUT PARAMETERS:

Inlet Type	= NONE IN SAG	Longitudinal Slope (ft/ft)	= 0.000
Gutter Width (ft)	= 0.000	Pavement Cross Slope (ft/ft)	= 0.000
Inlet n-value	= 0.016	Normal Gutter XSlope (ft/ft)	= 0.000
Downstream Inlet number	= 37	Gutter depression (in)	= 0.00

CATCH BASIN 103 TO SALT RIVER OUTFALL

101/19/94 NOTE: INCLUDES FUTURE STORM DRAIN (103FU & 115FU) NEAR UNIVERSITY DRIVE

STORM SEWER SUMMARY REPORT
MAIN SDCP1 100YR STM/10YR TW
FILE: C1E10010.STM

CIPCP (n=0.015)

RAINFALL FILE: PHX1.RND — 100 YEAR DESIGN STORM — I = 87.730/ (Tc + 10.500) ^ 0.850

LINE ID		FLOW RATE INFO						PIPE INFO					HYDRAULIC INFO		
LINE#	DESCRIPTION DOWNLINE#	INC AR TOT AR (ac)	RUNOFFC WEIGHTD C	INLTIME Tc (min)	INLT I TOTL I (in/h)	INC CIA TOT CIA (cfs)	INPUTQ TOTALQ (cfs)	UNIFORM FLOWCAP (cfs)	SIZE/ TYPE (in)	INVERT UP/DOWN (ft)	PIPE LEN (ft)	NVAL INVSLOP (ft/ft)	HGLSLOPE JLC (ft/ft)	HYD GRD UP/DOWN (ft)	VEL UP/DOWN (ft/s)
1	Pipe #140	0.0	0.00	0.00	11.89	0.00	144.30		78D	1111.73	122	0.015	0.001	1120.82	4.35
	DNLN = 0	0.0	-nan	20.37	4.75	0.00	144.30	209.8	78D	1111.47		0.002	1.00	1120.70	4.35
2	Pipe #139	0.0	0.00	0.00	11.89	0.00	144.30		78D	1112.34	275	0.015	0.001	1121.22	4.35
	DNLN = 1	0.0	-nan	19.32	4.90	0.00	144.30	212.3	78D	1111.74		0.002	0.41	1120.94	4.35
3	Pipe #136	0.0	0.00	0.00	11.89	0.00	133.90		78D	1113.50	522	0.015	0.001	1121.69	4.04
	DNLN = 2	0.0	-nan	17.16	5.22	0.00	133.90	213.3	78D	1112.35		0.002	0.06	1121.24	4.04
4	Pipe #133	0.0	0.00	0.00	11.89	0.00	123.80		78D	1114.15	300	0.015	0.001	1121.92	3.73
	DNLN = 3	0.0	-nan	15.82	5.44	0.00	123.80	211.5	78D	1113.50		0.002	0.03	1121.70	3.73
5	Pipe #131	0.0	0.00	0.00	11.89	0.00	121.20		78D	1114.70	250	0.015	0.001	1122.10	3.65
	DNLN = 4	0.0	-nan	14.68	5.65	0.00	121.20	211.2	78D	1114.16		0.002	0.00	1121.92	3.65
6	Pipe #129	0.0	0.00	0.00	11.89	0.00	115.40		78D	1115.25	250	0.015	0.001	1122.27	3.48
	DNLN = 5	0.0	-nan	13.48	5.89	0.00	115.40	211.2	78D	1114.71		0.002	0.03	1122.11	3.48
7	Pipe #128	0.0	0.00	0.00	11.89	0.00	115.40		78D	1116.06	369	0.015	0.001	1122.51	3.48
	DNLN = 6	0.0	-nan	11.71	6.29	0.00	115.40	211.6	78D	1115.26		0.002	0.07	1122.28	3.48
8	Pipe #125	0.0	0.00	0.00	11.89	0.00	47.10		48D	1119.44	273	0.015	0.001	1122.82	4.15
	DNLN = 7	0.0	-nan	10.58	6.58	0.00	47.10	61.7	48D	1118.77		0.002	0.06	1122.52	3.85
9	Pipe #124	0.0	0.00	0.00	11.89	0.00	47.10		48D	1119.99	217	0.015	0.001	1123.35	4.18
	DNLN = 8	0.0	-nan	9.68	6.82	0.00	47.10	62.1	48D	1119.45		0.002	1.04	1123.10	3.91
10	Pipe #120	0.0	0.00	0.00	11.89	0.00	34.80		48D	1120.14	60	0.015	0.000	1123.60	3.01
	DNLN = 9	0.0	-nan	9.35	6.92	0.00	34.80	60.1	48D	1120.00		0.002	0.87	1123.58	2.93
11	Pipe #118	0.0	0.00	0.00	11.89	0.00	32.20		48D	1120.54	162	0.015	0.000	1123.68	3.04
	DNLN = 10	0.0	-nan	8.42	7.21	0.00	32.20	61.1	48D	1120.15		0.002	0.03	1123.61	2.79
12	Pipe #116	0.0	0.00	0.00	11.89	0.00	30.50		48D	1120.88	136	0.015	0.001	1123.78	3.13
	DNLN = 11	0.0	-nan	7.67	7.46	0.00	30.50	61.3	48D	1120.55		0.002	0.03	1123.69	2.88
13	Pipe #112	0.0	0.00	0.00	11.89	0.00	20.00		36D	1121.16	112	0.015	0.001	1123.89	2.96
	DNLN = 12	0.0	-nan	7.03	7.69	0.00	20.00	28.4	36D	1120.89		0.002	0.03	1123.78	2.86

MAIN SDCP1 100YR STM/10YR TW
FILE: C1E10010.STM

RAINFALL FILE: PHX1.RND 100 YEAR DESIGN STORM I = 87.730/ (Tc + 10.500) ^ 0.850

LINE ID		FLOW RATE INFO						PIPE INFO					HYDRAULIC INFO		
LINE#	DESCRIPTION DOWNLINE#	INC AR TOT AR (ac)	RUNOFFC WEIGHTD C	INLTIME Tc (min)	INLT I TOTL I (in/h)	INC CIA TOT CIA (cfs)	INPUTQ TOTALQ (cfs)	UNIFORM FLOWCAP (cfs)	SIZE/ TYPE (in)	INVERT UP/DOWN (ft)	PIPE LEN (ft)	NVAL INVSLOP (ft/ft)	HGLSLOPE JLC (ft/ft)	HYD GRD UP/DOWN (ft)	VEL UP/DOWN (ft/s)
14	Pipe #110	0.0	0.00	0.00	11.89	0.00	18.70		36D	1122.03	346	0.015	0.001	1124.23	3.36
	DNLN = 13	0.0	-nan	5.15	8.47	0.00	18.70	28.8	36D	1121.17		0.002	0.03	1123.89	2.77
15	Pipe #107	0.0	0.00	0.00	11.89	0.00	16.90		36D	1122.73	280	0.015	0.001	1124.56	3.74
	DNLN = 14	0.0	-nan	3.77	9.16	0.00	16.90	28.7	36D	1122.04		0.002	0.04	1124.24	3.04
16	Pipe #105	0.0	0.00	0.00	11.89	0.00	11.30		24D	1123.35	239	0.015	0.003	1125.28	3.64
	DNLN = 15	0.0	-nan	2.69	9.79	0.00	11.30	9.9	24D	1122.74		0.003	0.04	1124.57	3.75
17	Pipe #104	0.0	0.00	0.00	11.89	0.00	8.40		24D	1123.49	32	0.015	0.002	1125.63	2.67
	DNLN = 16	0.0	-nan	2.49	9.92	0.00	8.40	11.0	24D	1123.39		0.003	1.44	1125.57	2.67
18	Pipe #103fu	0.0	0.00	0.00	11.89	0.00	4.30		24D	1123.92	118	0.015	0.000	1125.73	1.44
	DNLN = 17	0.0	-nan	1.09	10.93	0.00	4.30	11.8	24D	1123.49		0.004	0.45	1125.68	1.37
19	Pipe #103	0.0	0.00	0.00	11.89	0.00	1.30		24D	1124.01	29	0.015	0.000	1125.74	0.45
	DNLN = 18	0.0	-nan	0.00	11.89	0.00	1.30	10.9	24D	1123.92		0.003	0.04	1125.73	0.43
20	CB #103	0.0	0.00	0.00	11.89	0.00	1.30		24D	1124.02	0	0.015	1.001	1125.75	0.45
	DNLN = 19	0.0	-nan	0.00	11.89	0.00	1.30	0.0	24D	1124.02		0.000	1.04	1125.74	0.45
21	Pipe #138	0.0	0.00	0.00	11.89	0.00	10.32		24D	1136.76	64	0.015	0.255	1137.90	5.59
	DNLN = 2	0.0	-nan	0.26	11.64	0.00	10.32	116.3	24D	1115.50		0.352	1.30	1121.60	3.28
22	Pipe #137	0.0	0.00	0.00	11.89	0.00	5.32		24D	1137.42	59	0.015	0.006	1138.25	4.41
	DNLN = 21	0.0	-nan	0.00	11.89	0.00	5.32	19.1	24D	1136.86		0.009	0.04	1137.92	3.16
23	Pipe #135	0.0	0.00	0.00	11.89	0.00	10.11		24D	1133.03	40	0.015	0.303	1134.16	5.55
	DNLN = 3	0.0	-nan	0.26	11.64	0.00	10.11	131.2	24D	1116.67		0.448	1.30	1122.02	3.22
24	Pipe #134	0.0	0.00	0.00	11.89	0.00	5.13		24D	1133.74	59	0.015	0.006	1134.55	4.36
	DNLN = 23	0.0	-nan	0.00	11.89	0.00	5.13	19.9	24D	1133.13		0.010	0.04	1134.18	3.09
25	Pipe #132	0.0	0.00	0.00	11.89	0.00	2.65		24D	1130.95	39	0.015	0.246	1131.78	3.54
	DNLN = 4	0.0	-nan	0.00	11.89	0.00	2.65	119.1	24D	1117.45		0.369	1.30	1122.20	0.84
26	Pipe #130pl	0.0	0.00	0.00	11.89	0.00	5.78		24D	1125.76	29	0.015	0.146	1126.61	4.54
	DNLN = 5	0.0	-nan	0.55	11.38	0.00	5.78	105.4	24D	1117.70		0.289	1.30	1122.37	1.84

E-140

MAIN SDCP1 100YR STM/10YR TW
FILE: C1E10010.STM

RAINFALL FILE: PHX1.RND 100 YEAR DESIGN STORM I = 87.730/ (Tc + 10.500) ^ 0.850

LINE ID		FLOW RATE INFO						PIPE INFO					HYDRAULIC INFO		
LINE#	DESCRIPTION DOWNLINE#	INC AR TOT AR (ac)	RUNOFFC WEIGHTD C	INLTIME Tc (min)	INLT I TOTL I (in/h)	INC CIA TOT CIA (cfs)	INPUTQ TOTALQ (cfs)	UNIFORM FLOWCAP (cfs)	SIZE/ TYPE (in)	INVERT UP/DOWN (ft)	PIPE LEN (ft)	NVAL INVSLOP (ft/ft)	HGLSLOPE JLC (ft/ft)	HYD GRD UP/DOWN (ft)	VEL UP/DOWN (ft/s)
27	Pipe #130p2	0.0	0.00	0.00	11.89	0.00	5.78		24D	1126.46	139	0.015	0.006	1127.41	3.98
	DNLN = 26	0.0	-nan	0.00	11.89	0.00	5.78	13.9	24D	1125.76		0.005	0.04	1126.62	4.45
28	Pipe #127	0.0	0.00	0.00	11.89	0.00	21.17		24D	1120.73	97	0.015	0.012	1123.88	6.74
	DNLN = 7	0.0	-nan	0.46	11.46	0.00	21.17	32.0	24D	1118.14		0.027	1.30	1122.75	6.74
29	Pipe #126	0.0	0.00	0.00	11.89	0.00	10.74		24D	1121.30	95	0.015	0.003	1124.20	3.42
	DNLN = 28	0.0	-nan	0.00	11.89	0.00	10.74	13.8	24D	1120.83		0.005	0.04	1123.91	3.42
30	Pipe #123	0.0	0.00	0.00	11.89	0.00	8.23		24D	1121.70	160	0.015	0.002	1123.98	2.62
	DNLN = 9	0.0	-nan	0.59	11.35	0.00	8.23	19.6	24D	1120.10		0.010	1.30	1123.70	2.62
31	Pipe #122	0.0	0.00	0.00	11.89	0.00	1.73		24D	1124.07	65	0.015	0.009	1124.73	3.11
	DNLN = 30	0.0	-nan	0.00	11.89	0.00	1.73	37.4	24D	1121.70		0.036	1.30	1124.12	0.55
32	Pipe #121	0.0	0.00	0.00	11.89	0.00	51.20		36D	1120.60	9	0.015	0.098	1124.63	7.24
	DNLN = 10	0.0	-nan	0.00	11.89	0.00	51.20	133.6	36D	1120.12		0.053	1.00	1123.75	7.24
33	Pipe #119	0.0	0.00	0.00	11.89	0.00	2.59		24D	1126.09	114	0.015	0.027	1126.91	3.51
	DNLN = 10	0.0	-nan	0.00	11.89	0.00	2.59	41.6	24D	1120.96		0.045	1.30	1123.79	0.82
34	Pipe #117	0.0	0.00	0.00	11.89	0.00	1.66		24D	1124.50	43	0.015	0.030	1125.15	3.08
	DNLN = 11	0.0	-nan	0.00	11.89	0.00	1.66	52.6	24D	1121.41		0.072	1.30	1123.87	0.53
35	Pipe #115	0.0	0.00	0.00	11.89	0.00	10.56		24D	1122.68	125	0.015	0.002	1124.28	3.92
	DNLN = 12	0.0	-nan	0.46	11.47	0.00	10.56	17.8	24D	1121.65		0.008	1.30	1123.98	3.36
36	Pipe ~~#115p~~ 175	0.0	0.00	0.00	11.89	0.00	6.90		24D	1124.04	52	0.015	0.007	1125.08	4.18
	DNLN = 35	0.0	-nan	0.27	11.64	0.00	6.90	13.9	24D	1123.78		0.005	0.04	1124.71	4.82
37	Pipe #113	0.0	0.00	0.00	11.89	0.00	4.18		24D	1124.43	52	0.015	0.002	1125.16	4.00
	DNLN = 36	0.0	-nan	0.00	11.89	0.00	4.18	17.0	24D	1124.04		0.008	0.00	1125.08	2.53
38	Pipe #111	0.0	0.00	0.00	11.89	0.00	1.24		24D	1124.72	39	0.015	0.031	1125.28	2.83
	DNLN = 13	0.0	-nan	0.00	11.89	0.00	1.24	57.1	24D	1121.42		0.085	1.30	1124.07	0.39
39	Pipe #106	0.0	0.00	0.00	11.89	0.00	5.62		24D	1122.90	12	0.015	0.006	1124.92	1.80
	DNLN = 15	0.0	-nan	0.00	11.89	0.00	5.62	13.9	24D	1122.84		0.005	1.30	1124.84	1.79

E-141

MAIN SDCP1 100YR STM/10YR TW

Data File : C1E10010.STM Return Period: 100 Yrs

Rainfall file: PHX1.RND I = 87.730/ (Tc + 10.500) ^ 0.850

LINE 1 STORM SEWER HYDRAULIC REPORT

Diameter (in) = 78 N = 0.015 Critical Depth (in) = 37.57

Length (ft) = 122 Kj (JLC) = 1.0 Downstream Line # = OUTFALL

	INVERT (ft)	DEPTH (in)	HGL (ft)	EGL (ft)	CROWN (ft)	NAT GND (ft)	AREA (ft^2)	VEL (ft/s)
UPSTREAM	1111.73	78.00	1120.82	1121.12	1118.23	1125.00	33.18	4.35
DNSTREAM	1111.47	78.00	1120.70	1120.99	1117.97	1119.47	33.18	4.35
SLOPE(%)	0.213		0.101	0.101		4.533		

		CATCHMENT	CUMULATIVE		
Area (ac)	=	0.0	0.0		
Drainage Time (min)	=	0.00	20.37		
Intensity (in/h)	=	0.00	4.75	TOTAL	UNIFORM
Runoff Coefficient	=	0.00	0.00	FLOW	CAPACITY
Rational Flow (cfs)	=	0.00	0.00	(cfs)	(cfs)
Known Flow (cfs)	=	144.30	144.30	144.30	209.80

Note: Upstream surcharge (ft) = 2.59

STORM SEWER INLET REPORT

FLOW RESULTS (cfs)

Flow from Catchment	=	0.00	PONDING WIDTH (ft)	=	0.00
Carryover from previous inlet	=	0.00	DEPTH AT CURB (ft)	=	0.00
Total flow to current inlet	=	0.00	EFFICIENCY (%)		
Intercepted by current inlet	=	0.00	Curb = *		
Bypassed by current inlet	=	0.00	Grate = *	Total =	-inf
			Slot = *		

INPUT PARAMETERS:

Inlet Type	= NONE IN SAG		Longitudinal Slope (ft/ft)	=	0.000
Gutter Width (ft)	=	0.000	Pavement Cross Slope (ft/ft)	=	0.000
Inlet n-value	=	0.016	Normal Gutter XSlope (ft/ft)	=	0.000
Downstream Inlet number	=	0	Gutter depression (in)	=	0.00

E-142

MAIN SDCP1 100YR STM/10YR TW

Data File : C1E10010.STM Return Period: 100 Yrs

Rainfall file: PHX1.RND I = 87.730/ (Tc + 10.500) ^ 0.850

LINE 2 STORM SEWER HYDRAULIC REPORT

Diameter (in) = 78 N = 0.015 Critical Depth (in) = 37.57

Length (ft) = 275 Kj (JLC) = 0.4 Downstream Line # = 1

	INVERT (ft)	DEPTH (in)	HGL (ft)	EGL (ft)	CROWN (ft)	NAT GND (ft)	AREA (ft^2)	VEL (ft/s)
UPSTREAM	1112.34	78.00	1121.22	1121.51	1118.84	1123.20	33.18	4.35
DNSTREAM	1111.74	78.00	1120.94	1121.24	1118.24	1125.00	33.18	4.35
SLOPE(%)	0.218		0.101	0.101		-0.655		

		CATCHMENT	CUMULATIVE		
Area (ac)	=	0.0	0.0		
Drainage Time (min)	=	0.00	19.32		
Intensity (in/h)	=	0.00	4.90	TOTAL	UNIFORM
Runoff Coefficient	=	0.00	0.00	FLOW	CAPACITY
Rational Flow (cfs)	=	0.00	0.00	(cfs)	(cfs)
Known Flow (cfs)	=	144.30	144.30	144.30	212.27

Note: Upstream surcharge (ft) = 2.38

STORM SEWER INLET REPORT

FLOW RESULTS (cfs)

Flow from Catchment	=	0.00
Carryover from previous inlet	=	0.00
Total flow to current inlet	=	0.00
Intercepted by current inlet	=	0.00
Bypassed by current inlet	=	0.00

PONDING WIDTH (ft) = 0.00

DEPTH AT CURB (ft) = 0.00

EFFICIENCY (%)

Curb = *

Grate = * Total = -inf

Slot = *

INPUT PARAMETERS:

Inlet Type	= NONE IN SAG	Longitudinal Slope (ft/ft)	= 0.000
Gutter Width (ft)	= 0.000	Pavement Cross Slope (ft/ft)	= 0.000
Inlet n-value	= 0.016	Normal Gutter XSlope (ft/ft)	= 0.000
Downstream Inlet number	= 1	Gutter depression (in)	= 0.00

MAIN SDCP1 100YR STM/10YR TW

Data File : C1E10010.STM Return Period: 100 Yrs

Rainfall file: PHX1.RND I = 87.730/ (Tc + 10.500) ^ 0.850

LINE 3 STORM SEWER HYDRAULIC REPORT

Diameter (in) = 78 N = 0.015 Critical Depth (in) = 36.19

Length (ft) = 522 Kj (JLC) = 0.1 Downstream Line # = 2

	INVERT (ft)	DEPTH (in)	HGL (ft)	EGL (ft)	CROWN (ft)	NAT GND (ft)	AREA (ft^2)	VEL (ft/s)
UPSTREAM	1113.50	78.00	1121.69	1121.94	1120.00	1124.15	33.18	4.04
DNSTREAM	1112.35	78.00	1121.24	1121.49	1118.85	1123.20	33.18	4.04
SLOPE(%)	0.220		0.087	0.087		0.182		

		CATCHMENT	CUMULATIVE		
Area (ac)	=	0.0	0.0		
Drainage Time (min)	=	0.00	17.16		
Intensity (in/h)	=	0.00	5.22	TOTAL	UNIFORM
Runoff Coefficient	=	0.00	0.00	FLOW	CAPACITY
Rational Flow (cfs)	=	0.00	0.00	(cfs)	(cfs)
Known Flow (cfs)	=	133.90	133.90	133.90	213.31

Note: Upstream surcharge (ft) = 1.69

STORM SEWER INLET REPORT

FLOW RESULTS (cfs)

Flow from Catchment	=	0.00	PONDING WIDTH (ft)	=	0.00
Carryover from previous inlet	=	0.00	DEPTH AT CURB (ft)	=	0.00
Total flow to current inlet	=	0.00	EFFICIENCY (%)		
Intercepted by current inlet	=	0.00	Curb = *		
Bypassed by current inlet	=	0.00	Grate = *	Total =	-inf
			Slot = *		

INPUT PARAMETERS:

Inlet Type	=	NONE IN SAG	Longitudinal Slope (ft/ft)	=	0.000
Gutter Width (ft)	=	0.000	Pavement Cross Slope (ft/ft)	=	0.000
Inlet n-value	=	0.016	Normal Gutter XSlope (ft/ft)	=	0.000
Downstream Inlet number	=	2	Gutter depression (in)	=	0.00

E-144

MAIN SDCP1 100YR STM/10YR TW

Data File : C1E10010.STM Return Period: 100 Yrs

Rainfall file: PHX1.RND I = 87.730/ (Tc + 10.500) ^ 0.850

LINE 4 STORM SEWER HYDRAULIC REPORT

Diameter (in) = 78 N = 0.015 Critical Depth (in) = 34.80

Length (ft) = 300 Kj (JLC) = 0.0 Downstream Line # = 3

	INVERT (ft)	DEPTH (in)	HGL (ft)	EGL (ft)	CROWN (ft)	NAT GND (ft)	AREA (ft^2)	VEL (ft/s)
UPSTREAM	1114.15	78.00	1121.92	1122.14	1120.65	1125.40	33.18	3.73
DNSTREAM	1113.50	78.00	1121.70	1121.91	1120.00	1124.15	33.18	3.73
SLOPE(%)	0.217		0.074	0.074		0.417		

		CATCHMENT	CUMULATIVE		
Area (ac)	=	0.0	0.0		
Drainage Time (min)	=	0.00	15.82		
Intensity (in/h)	=	0.00	5.44	TOTAL	UNIFORM
Runoff Coefficient	=	0.00	0.00	FLOW	CAPACITY
Rational Flow (cfs)	=	0.00	0.00	(cfs)	(cfs)
Known Flow (cfs)	=	123.80	123.80	123.80	211.54

Note: Upstream surcharge (ft) = 1.27

STORM SEWER INLET REPORT

FLOW RESULTS (cfs)

Flow from Catchment	=	0.00
Carryover from previous inlet	=	0.00
Total flow to current inlet	=	0.00
Intercepted by current inlet	=	0.00
Bypassed by current inlet	=	0.00

PONDING WIDTH (ft) = 0.00

DEPTH AT CURB (ft) = 0.00

EFFICIENCY (%)

Curb = *

Grate = * Total = -inf

Slot = *

INPUT PARAMETERS:

Inlet Type	= NONE IN SAG	Longitudinal Slope (ft/ft)	= 0.000
Gutter Width (ft)	= 0.000	Pavement Cross Slope (ft/ft)	= 0.000
Inlet n-value	= 0.016	Normal Gutter XSlope (ft/ft)	= 0.000
Downstream Inlet number	= 3	Gutter depression (in)	= 0.00

MAIN SDCP1 100YR STM/10YR TW

Data File : C1E10010.STM Return Period: 100 Yrs

Rainfall file: PHX1.RND I = 87.730/ (Tc + 10.500) ^ 0.850

LINE 5 STORM SEWER HYDRAULIC REPORT

Diameter (in) = 78 N = 0.015 Critical Depth (in) = 34.43

Length (ft) = 250 Kj (JLC) = 0.0 Downstream Line # = 4

	INVERT (ft)	DEPTH (in)	HGL (ft)	EGL (ft)	CROWN (ft)	NAT GND (ft)	AREA (ft^2)	VEL (ft/s)
UPSTREAM	1114.70	78.00	1122.10	1122.31	1121.20	1125.45	33.18	3.65
DNSTREAM	1114.16	78.00	1121.92	1122.13	1120.66	1125.40	33.18	3.65
SLOPE(%)	0.216		0.071	0.071		0.020		

		CATCHMENT	CUMULATIVE		
Area (ac)	=	0.0	0.0		
Drainage Time (min)	=	0.00	14.68		
Intensity (in/h)	=	0.00	5.65	TOTAL	UNIFORM
Runoff Coefficient	=	0.00	0.00	FLOW	CAPACITY
Rational Flow (cfs)	=	0.00	0.00	(cfs)	(cfs)
Known Flow (cfs)	=	121.20	121.20	121.20	211.20

Note: Upstream surcharge (ft) = 0.90

STORM SEWER INLET REPORT

FLOW RESULTS (cfs)

Flow from Catchment	=	0.00	PONDING WIDTH (ft)	=	0.00
Carryover from previous inlet	=	0.00	DEPTH AT CURB (ft)	=	0.00
Total flow to current inlet	=	0.00	EFFICIENCY (%)		
Intercepted by current inlet	=	0.00	Curb = *		
Bypassed by current inlet	=	0.00	Grate = *	Total =	-inf
			Slot = *		

INPUT PARAMETERS:

Inlet Type	= NONE IN SAG		Longitudinal Slope (ft/ft)	=	0.000
Gutter Width (ft)	=	0.000	Pavement Cross Slope (ft/ft)	=	0.000
Inlet n-value	=	0.016	Normal Gutter XSlope (ft/ft)	=	0.000
Downstream Inlet number	=	4	Gutter depression (in)	=	0.00

MAIN SDCP1 100YR STM/10YR TW

Data File : C1E10010.STM Return Period: 100 Yrs
Rainfall file: PHX1.RND I = 87.730/ (Tc + 10.500) ^ 0.850

LINE 6 STORM SEWER HYDRAULIC REPORT

Diameter (in) = 78 N = 0.015 Critical Depth (in) = 33.60
Length (ft) = 250 Kj (JLC) = 0.0 Downstream Line # = 5

	INVERT (ft)	DEPTH (in)	HGL (ft)	EGL (ft)	CROWN (ft)	NAT GND (ft)	AREA (ft^2)	VEL (ft/s)
UPSTREAM	1115.25	78.00	1122.27	1122.45	1121.75	1126.00	33.18	3.48
DNSTREAM	1114.71	78.00	1122.11	1122.29	1121.21	1125.45	33.18	3.48
SLOPE(%)	0.216		0.065	0.065		0.220		

	CATCHMENT	CUMULATIVE		
Area (ac) =	0.0	0.0		
Drainage Time (min) =	0.00	13.48		
Intensity (in/h) =	0.00	5.89	TOTAL	UNIFORM
Runoff Coefficient =	0.00	0.00	FLOW	CAPACITY
Rational Flow (cfs) =	0.00	0.00	(cfs)	(cfs)
Known Flow (cfs) =	115.40	115.40	115.40	211.22

Note: Upstream surcharge (ft) = 0.52

STORM SEWER INLET REPORT

FLOW RESULTS (cfs)
Flow from Catchment = 0.00
Carryover from previous inlet = 0.00
Total flow to current inlet = 0.00
Intercepted by current inlet = 0.00
Bypassed by current inlet = 0.00

PONDING WIDTH (ft) = 0.00
DEPTH AT CURB (ft) = 0.00
EFFICIENCY (%)
Curb = *
Grate = * Total = -inf
Slot = *

INPUT PARAMETERS:
Inlet Type = NONE IN SAG
Gutter Width (ft) = 0.000
Inlet n-value = 0.016
Downstream Inlet number = 5
Longitudinal Slope (ft/ft) = 0.000
Pavement Cross Slope (ft/ft) = 0.000
Normal Gutter XSlope (ft/ft) = 0.000
Gutter depression (in) = 0.00

E-147

MAIN SDCP1 100YR STM/10YR TW

Data File : C1E10010.STM Return Period: 100 Yrs

Rainfall file: PHX1.RND I = 87.730/ (Tc + 10.500) ^ 0.850

LINE 7 STORM SEWER HYDRAULIC REPORT

Diameter (in) = 78 N = 0.015 Critical Depth (in) = 33.60

Length (ft) = 369 Kj (JLC) = 0.1 Downstream Line # = 6

	INVERT (ft)	DEPTH (in)	HGL (ft)	EGL (ft)	CROWN (ft)	NAT GND (ft)	AREA (ft^2)	VEL (ft/s)
UPSTREAM	1116.06	77.37	1122.51	1122.70	1122.56	1128.00	33.14	3.48
DNSTREAM	1115.26	78.00	1122.28	1122.47	1121.76	1126.00	33.18	3.48
SLOPE(%)	0.217		0.062	0.062		0.542		

		CATCHMENT	CUMULATIVE		
Area (ac)	=	0.0	0.0		
Drainage Time (min)	=	0.00	11.71		
Intensity (in/h)	=	0.00	6.29	TOTAL	UNIFORM
Runoff Coefficient	=	0.00	0.00	FLOW	CAPACITY
Rational Flow (cfs)	=	0.00	0.00	(cfs)	(cfs)
Known Flow (cfs)	=	115.40	115.40	115.40	211.61

Note: Transitional flow exists in this line

STORM SEWER INLET REPORT

FLOW RESULTS (cfs)

Flow from Catchment	=	0.00	PONDING WIDTH (ft)	=	0.00
Carryover from previous inlet	=	0.00	DEPTH AT CURB (ft)	=	0.00
Total flow to current inlet	=	0.00	EFFICIENCY (%)		
Intercepted by current inlet	=	0.00	Curb = *		
Bypassed by current inlet	=	0.00	Grate = *	Total =	-inf
			Slot = *		

INPUT PARAMETERS:

Inlet Type	= NONE IN SAG		Longitudinal Slope (ft/ft)	=	0.000
Gutter Width (ft)	=	0.000	Pavement Cross Slope (ft/ft)	=	0.000
Inlet n-value	=	0.016	Normal Gutter XSlope (ft/ft)	=	0.000
Downstream Inlet number	=	6	Gutter depression (in)	=	0.00

MAIN SDCP1 100YR STM/10YR TW

Data File : C1E10010.STM Return Period: 100 Yrs

Rainfall file: PHX1.RND I = 87.730/ (Tc + 10.500) ^ 0.850

LINE 8 STORM SEWER HYDRAULIC REPORT

Diameter (in) = 48 N = 0.015 Critical Depth (in) = 24.35

Length (ft) = 273 Kj (JLC) = 0.1 Downstream Line # = 7

	INVERT (ft)	DEPTH (in)	HGL (ft)	EGL (ft)	CROWN (ft)	NAT GND (ft)	AREA (ft^2)	VEL (ft/s)
UPSTREAM	1119.44	40.61	1122.82	1123.09	1123.44	1127.30	11.34	4.15
DNSTREAM	1118.77	44.99	1122.52	1122.75	1122.77	1128.00	12.24	3.85
SLOPE(%)	0.245		0.112	0.126		-0.256		

		CATCHMENT	CUMULATIVE		
Area (ac)	=	0.0	0.0		
Drainage Time (min)	=	0.00	10.58		
Intensity (in/h)	=	0.00	6.58	TOTAL	UNIFORM
Runoff Coefficient	=	0.00	0.00	FLOW	CAPACITY
Rational Flow (cfs)	=	0.00	0.00	(cfs)	(cfs)
Known Flow (cfs)	=	47.10	47.10	47.10	61.67

STORM SEWER INLET REPORT

FLOW RESULTS (cfs)

Flow from Catchment	=	0.00	PONDING WIDTH (ft)	=	0.00
Carryover from previous inlet	=	0.00	DEPTH AT CURB (ft)	=	0.00
Total flow to current inlet	=	0.00	EFFICIENCY (%)		
Intercepted by current inlet	=	0.00	Curb = *		
Bypassed by current inlet	=	0.00	Grate = *	Total =	-inf
			Slot = *		

INPUT PARAMETERS:

Inlet Type	= NONE IN SAG		Longitudinal Slope (ft/ft)	=	0.000
Gutter Width (ft)	=	0.000	Pavement Cross Slope (ft/ft)	=	0.000
Inlet n-value	=	0.016	Normal Gutter XSlope (ft/ft)	=	0.000
Downstream Inlet number	=	7	Gutter depression (in)	=	0.00

MAIN SDCP1 100YR STM/10YR TW

Data File : C1E10010.STM Return Period: 100 Yrs

Rainfall file: PHX1.RND I = 87.730/ (Tc + 10.500) ^ 0.850

LINE 9 STORM SEWER HYDRAULIC REPORT

Diameter (in) = 48 N = 0.015 Critical Depth (in) = 24.35

Length (ft) = 217 Kj (JLC) = 1.0 Downstream Line # = 8

	INVERT (ft)	DEPTH (in)	HGL (ft)	EGL (ft)	CROWN (ft)	NAT GND (ft)	AREA (ft²)	VEL (ft/s)
UPSTREAM	1119.99	40.26	1123.35	1123.62	1123.99	1129.10	11.26	4.18
DNSTREAM	1119.45	43.84	1123.10	1123.34	1123.45	1127.30	12.04	3.91
SLOPE(%)	0.249		0.112	0.127		0.829		

		CATCHMENT	CUMULATIVE		
Area (ac)	=	0.0	0.0		
Drainage Time (min)	=	0.00	9.68		
Intensity (in/h)	=	0.00	6.82	TOTAL	UNIFORM
Runoff Coefficient	=	0.00	0.00	FLOW	CAPACITY
Rational Flow (cfs)	=	0.00	0.00	(cfs)	(cfs)
Known Flow (cfs)	=	47.10	47.10	47.10	62.11

STORM SEWER INLET REPORT

FLOW RESULTS (cfs)

Flow from Catchment	=	0.00	PONDING WIDTH (ft)	=	0.00
Carryover from previous inlet	=	0.00	DEPTH AT CURB (ft)	=	0.00
Total flow to current inlet	=	0.00	EFFICIENCY (%)		
Intercepted by current inlet	=	0.00	Curb = *		
Bypassed by current inlet	=	0.00	Grate = *	Total =	-inf
			Slot = *		

INPUT PARAMETERS:

Inlet Type	= NONE IN SAG		Longitudinal Slope (ft/ft)	=	0.000
Gutter Width (ft)	=	0.000	Pavement Cross Slope (ft/ft)	=	0.000
Inlet n-value	=	0.016	Normal Gutter XSlope (ft/ft)	=	0.000
Downstream Inlet number	=	7	Gutter depression (in)	=	0.00

F-150

MAIN SDCP1 100YR STM/10YR TW

Data File : C1E10010.STM Return Period: 100 Yrs

Rainfall file: PHX1.RND I = 87.730/ (Tc + 10.500) ^ 0.850

LINE 10 STORM SEWER HYDRAULIC REPORT

Diameter (in) = 48 N = 0.015 Critical Depth (in) = 20.93

Length (ft) = 60 Kj (JLC) = 0.9 Downstream Line # = 9

	INVERT (ft)	DEPTH (in)	HGL (ft)	EGL (ft)	CROWN (ft)	NAT GND (ft)	AREA (ft²)	VEL (ft/s)
UPSTREAM	1120.14	41.58	1123.60	1123.75	1124.14	1129.00	11.57	3.01
DNSTREAM	1120.00	42.98	1123.58	1123.72	1124.00	1129.10	11.87	2.93
SLOPE(%)	0.233		0.038	0.050		-0.167		

		CATCHMENT	CUMULATIVE		
Area (ac)	=	0.0	0.0		
Drainage Time (min)	=	0.00	9.35		
Intensity (in/h)	=	0.00	6.92	TOTAL	UNIFORM
Runoff Coefficient	=	0.00	0.00	FLOW	CAPACITY
Rational Flow (cfs)	=	0.00	0.00	(cfs)	(cfs)
Known Flow (cfs)	=	34.80	34.80	34.80	60.14

STORM SEWER INLET REPORT

FLOW RESULTS (cfs)

Flow from Catchment	=	0.00
Carryover from previous inlet	=	0.00
Total flow to current inlet	=	0.00
Intercepted by current inlet	=	0.00
Bypassed by current inlet	=	0.00

PONDING WIDTH (ft) = 0.00

DEPTH AT CURB (ft) = 0.00

EFFICIENCY (%)

Curb = *

Grate = * Total = -inf

Slot = *

INPUT PARAMETERS:

Inlet Type	= NONE IN SAG		Longitudinal Slope (ft/ft)	=	0.000
Gutter Width (ft)	=	0.000	Pavement Cross Slope (ft/ft)	=	0.000
Inlet n-value	=	0.016	Normal Gutter XSlope (ft/ft)	=	0.000
Downstream Inlet number	=	8	Gutter depression (in)	=	0.00

MAIN SDCP1 100YR STM/10YR TW

Data File : C1E10010.STM Return Period: 100 Yrs

Rainfall file: PHX1.RND I = 87.730/ (Tc + 10.500) ^ 0.850

LINE 11 STORM SEWER HYDRAULIC REPORT

Diameter (in) = 48 N = 0.015 Critical Depth (in) = 20.13

Length (ft) = 162 Kj (JLC) = 0.0 Downstream Line # = 10

	INVERT (ft)	DEPTH (in)	HGL (ft)	EGL (ft)	CROWN (ft)	NAT GND (ft)	AREA (ft²)	VEL (ft/s)
UPSTREAM	1120.54	37.71	1123.68	1123.83	1124.54	1129.00	10.59	3.04
DNSTREAM	1120.15	41.51	1123.61	1123.73	1124.15	1129.00	11.55	2.79
SLOPE(%)	0.241		0.046	0.060		0.000		

		CATCHMENT	CUMULATIVE		
Area (ac)	=	0.0	0.0		
Drainage Time (min)	=	0.00	8.42		
Intensity (in/h)	=	0.00	7.21	TOTAL	UNIFORM
Runoff Coefficient	=	0.00	0.00	FLOW	CAPACITY
Rational Flow (cfs)	=	0.00	0.00	(cfs)	(cfs)
Known Flow (cfs)	=	32.20	32.20	32.20	61.08

STORM SEWER INLET REPORT

FLOW RESULTS (cfs)

Flow from Catchment	=	0.00	PONDING WIDTH (ft)	=	0.00
Carryover from previous inlet	=	0.00	DEPTH AT CURB (ft)	=	0.00
Total flow to current inlet	=	0.00	EFFICIENCY (%)		
Intercepted by current inlet	=	0.00	Curb = *		
Bypassed by current inlet	=	0.00	Grate = *	Total =	-inf
			Slot = *		

INPUT PARAMETERS:

Inlet Type	= NONE IN SAG		Longitudinal Slope (ft/ft)	=	0.000
Gutter Width (ft)	=	0.000	Pavement Cross Slope (ft/ft)	=	0.000
Inlet n-value	=	0.016	Normal Gutter XSlope (ft/ft)	=	0.000
Downstream Inlet number	=	10	Gutter depression (in)	=	0.00

MAIN SDCP1 100YR STM/10YR TW

Data File : C1E10010.STM Return Period: 100 Yrs
Rainfall file: PHX1.RND I = 87.730/ (Tc + 10.500) ^ 0.850

LINE 12 STORM SEWER HYDRAULIC REPORT

Diameter (in) = 48 N = 0.015 Critical Depth (in) = 19.60
Length (ft) = 136 Kj (JLC) = 0.0 Downstream Line # = 11

	INVERT (ft)	DEPTH (in)	HGL (ft)	EGL (ft)	CROWN (ft)	NAT GND (ft)	AREA (ft^2)	VEL (ft/s)
UPSTREAM	1120.88	34.77	1123.78	1123.93	1124.88	1129.80	9.75	3.13
DNSTREAM	1120.55	37.65	1123.69	1123.82	1124.55	1129.00	10.57	2.88
SLOPE(%)	0.243		0.067	0.083		0.588		

		CATCHMENT	CUMULATIVE		
Area (ac)	=	0.0	0.0		
Drainage Time (min)	=	0.00	7.67		
Intensity (in/h)	=	0.00	7.46	TOTAL	UNIFORM
Runoff Coefficient	=	0.00	0.00	FLOW	CAPACITY
Rational Flow (cfs)	=	0.00	0.00	(cfs)	(cfs)
Known Flow (cfs)	=	30.50	30.50	30.50	61.32

STORM SEWER INLET REPORT

FLOW RESULTS (cfs)
Flow from Catchment = 0.00
Carryover from previous inlet = 0.00
Total flow to current inlet = 0.00
Intercepted by current inlet = 0.00
Bypassed by current inlet = 0.00

PONDING WIDTH (ft) = 0.00
DEPTH AT CURB (ft) = 0.00
EFFICIENCY (%)
Curb = *
Grate = * Total = -inf
Slot = *

INPUT PARAMETERS:
Inlet Type = NONE IN SAG
Gutter Width (ft) = 0.000
Inlet n-value = 0.016
Downstream Inlet number = 9
Longitudinal Slope (ft/ft) = 0.000
Pavement Cross Slope (ft/ft) = 0.000
Normal Gutter XSlope (ft/ft) = 0.000
Gutter depression (in) = 0.00

E-153

MAIN SDCP1 100YR STM/10YR TW

Data File : C1E10010.STM Return Period: 100 Yrs

Rainfall file: PHX1.RND I = 87.730/ (Tc + 10.500) ^ 0.850

LINE 13 STORM SEWER HYDRAULIC REPORT

Diameter (in) = 36 N = 0.015 Critical Depth (in) = 17.10

Length (ft) = 112 Kj (JLC) = 0.0 Downstream Line # = 12

	INVERT (ft)	DEPTH (in)	HGL (ft)	EGL (ft)	CROWN (ft)	NAT GND (ft)	AREA (ft^2)	VEL (ft/s)
UPSTREAM	1121.16	32.75	1123.89	1124.03	1124.16	1130.10	6.75	2.96
DNSTREAM	1120.89	34.71	1123.78	1123.91	1123.89	1129.80	6.99	2.86
SLOPE(%)	0.241		0.095	0.103		0.268		

		CATCHMENT	CUMULATIVE	TOTAL FLOW (cfs)	UNIFORM CAPACITY (cfs)
Area (ac)	=	0.0	0.0		
Drainage Time (min)	=	0.00	7.03		
Intensity (in/h)	=	0.00	7.69		
Runoff Coefficient	=	0.00	0.00		
Rational Flow (cfs)	=	0.00	0.00		
Known Flow (cfs)	=	20.00	20.00	20.00	28.38

STORM SEWER INLET REPORT

FLOW RESULTS (cfs)

Flow from Catchment	=	0.00	PONDING WIDTH (ft)	=	0.00
Carryover from previous inlet	=	0.00	DEPTH AT CURB (ft)	=	0.00
Total flow to current inlet	=	0.00	EFFICIENCY (%)		
Intercepted by current inlet	=	0.00	Curb = *		
Bypassed by current inlet	=	0.00	Grate = *	Total =	-inf
			Slot = *		

INPUT PARAMETERS:

Inlet Type	= NONE IN SAG		Longitudinal Slope (ft/ft)	=	0.000
Gutter Width (ft)	=	0.000	Pavement Cross Slope (ft/ft)	=	0.000
Inlet n-value	=	0.016	Normal Gutter XSlope (ft/ft)	=	0.000
Downstream Inlet number	=	10	Gutter depression (in)	=	0.00

Data File : C1E10010.STM Return Period: 100 Yrs
Rainfall file: PHX1.RND I = 87.730/ (Tc + 10.500) ^ 0.850

LINE 14 STORM SEWER HYDRAULIC REPORT

Diameter (in) = 36 N = 0.015 Critical Depth (in) = 16.54
Length (ft) = 346 Kj (JLC) = 0.0 Downstream Line # = 13

	INVERT (ft)	DEPTH (in)	HGL (ft)	EGL (ft)	CROWN (ft)	NAT GND (ft)	AREA (ft^2)	VEL (ft/s)
UPSTREAM	1122.03	26.45	1124.23	1124.41	1125.03	1129.02	5.57	3.36
DNSTREAM	1121.17	32.67	1123.89	1124.01	1124.17	1130.10	6.74	2.77
SLOPE(%)	0.249		0.099	0.115		-0.312		

		CATCHMENT	CUMULATIVE		
Area (ac)	=	0.0	0.0		
Drainage Time (min)	=	0.00	5.15		
Intensity (in/h)	=	0.00	8.47	TOTAL	UNIFORM
Runoff Coefficient	=	0.00	0.00	FLOW	CAPACITY
Rational Flow (cfs)	=	0.00	0.00	(cfs)	(cfs)
Known Flow (cfs)	=	18.70	18.70	18.70	28.82

STORM SEWER INLET REPORT

FLOW RESULTS (cfs)
Flow from Catchment = 0.00
Carryover from previous inlet = 0.00
Total flow to current inlet = 0.00
Intercepted by current inlet = 0.00
Bypassed by current inlet = 0.00

PONDING WIDTH (ft) = 0.00
DEPTH AT CURB (ft) = 0.00
EFFICIENCY (%)
Curb = *
Grate = * Total = -inf
Slot = *

INPUT PARAMETERS:
Inlet Type = NONE IN SAG
Gutter Width (ft) = 0.000
Inlet n-value = 0.016
Downstream Inlet number = 11
Longitudinal Slope (ft/ft) = 0.000
Pavement Cross Slope (ft/ft) = 0.000
Normal Gutter XSlope (ft/ft) = 0.000
Gutter depression (in) = 0.00

MAIN SDCP1 100YR STM/10YR TW

Data File : C1E10010.STM Return Period: 100 Yrs

Rainfall file: PHX1.RND I = 87.730/ (Tc + 10.500) ^ 0.850

LINE 15 STORM SEWER HYDRAULIC REPORT

Diameter (in) = 36 N = 0.015 Critical Depth (in) = 15.72

Length (ft) = 280 Kj (JLC) = 0.0 Downstream Line # = 14

	INVERT (ft)	DEPTH (in)	HGL (ft)	EGL (ft)	CROWN (ft)	NAT GND (ft)	AREA (ft^2)	VEL (ft/s)
UPSTREAM	1122.73	21.98	1124.56	1124.78	1125.73	1128.35	4.52	3.74
DNSTREAM	1122.04	26.41	1124.24	1124.38	1125.04	1129.02	5.56	3.04
SLOPE(%)	0.246		0.115	0.141		-0.239		

		CATCHMENT	CUMULATIVE		
Area (ac)	=	0.0	0.0		
Drainage Time (min)	=	0.00	3.77		
Intensity (in/h)	=	0.00	9.16	TOTAL	UNIFORM
Runoff Coefficient	=	0.00	0.00	FLOW	CAPACITY
Rational Flow (cfs)	=	0.00	0.00	(cfs)	(cfs)
Known Flow (cfs)	=	16.90	16.90	16.90	28.69

STORM SEWER INLET REPORT

FLOW RESULTS (cfs)

Flow from Catchment	=	0.00	PONDING WIDTH (ft)	=	0.00
Carryover from previous inlet	=	0.00	DEPTH AT CURB (ft)	=	0.00
Total flow to current inlet	=	0.00	EFFICIENCY (%)		
Intercepted by current inlet	=	0.00	Curb = *		
Bypassed by current inlet	=	0.00	Grate = *	Total =	-inf
			Slot = *		

INPUT PARAMETERS:

Inlet Type	= NONE IN SAG		Longitudinal Slope (ft/ft)	=	0.000
Gutter Width (ft)	=	0.000	Pavement Cross Slope (ft/ft)	=	0.000
Inlet n-value	=	0.016	Normal Gutter XSlope (ft/ft)	=	0.000
Downstream Inlet number	=	12	Gutter depression (in)	=	0.00

MAIN SDCP1 100YR STM/10YR TW

Data File : C1E10010.STM Return Period: 100 Yrs

Rainfall file: PHX1.RND I = 87.730/ (Tc + 10.500) ^ 0.850

LINE 16 STORM SEWER HYDRAULIC REPORT

Diameter (in) = 24 N = 0.015 Critical Depth (in) = 14.28

Length (ft) = 239 Kj (JLC) = 0.0 Downstream Line # = 15

	INVERT (ft)	DEPTH (in)	HGL (ft)	EGL (ft)	CROWN (ft)	NAT GND (ft)	AREA (ft^2)	VEL (ft/s)
UPSTREAM	1123.35	23.10	1125.28	1125.48	1125.35	1128.71	3.10	3.64
DNSTREAM	1122.74	21.96	1124.57	1124.79	1124.74	1128.35	3.01	3.75
SLOPE(%)	0.255		0.295	0.290		0.151		

		CATCHMENT	CUMULATIVE		
Area (ac)	=	0.0	0.0		
Drainage Time (min)	=	0.00	2.69		
Intensity (in/h)	=	0.00	9.79	TOTAL	UNIFORM
Runoff Coefficient	=	0.00	0.00	FLOW	CAPACITY
Rational Flow (cfs)	=	0.00	0.00	(cfs)	(cfs)
Known Flow (cfs)	=	11.30	11.30	11.30	9.90

STORM SEWER INLET REPORT

FLOW RESULTS (cfs)

Flow from Catchment	=	0.00	PONDING WIDTH (ft)	=	0.00
Carryover from previous inlet	=	0.00	DEPTH AT CURB (ft)	=	0.00
Total flow to current inlet	=	0.00	EFFICIENCY (%)		
Intercepted by current inlet	=	0.00	Curb = *		
Bypassed by current inlet	=	0.00	Grate = *	Total =	-inf
			Slot = *		

INPUT PARAMETERS:

Inlet Type	= NONE IN SAG		Longitudinal Slope (ft/ft)	=	0.000
Gutter Width (ft)	=	0.000	Pavement Cross Slope (ft/ft)	=	0.000
Inlet n-value	=	0.016	Normal Gutter XSlope (ft/ft)	=	0.000
Downstream Inlet number	=	13	Gutter depression (in)	=	0.00

MAIN SDCP1 100YR STM/10YR TW

Data File : C1E10010.STM Return Period: 100 Yrs

Rainfall file: PHX1.RND I = 87.730/ (Tc + 10.500) ^ 0.850

LINE 17 STORM SEWER HYDRAULIC REPORT

Diameter (in) = 24 N = 0.015 Critical Depth (in) = 12.31

Length (ft) = 32 Kj (JLC) = 1.4 Downstream Line # = 16

	INVERT (ft)	DEPTH (in)	HGL (ft)	EGL (ft)	CROWN (ft)	NAT GND (ft)	AREA (ft^2)	VEL (ft/s)
UPSTREAM	1123.49	24.00	1125.63	1125.74	1125.49	1128.71	3.14	2.67
DNSTREAM	1123.39	24.00	1125.57	1125.68	1125.39	1128.71	3.14	2.67
SLOPE(%)	0.312		0.183	0.183		0.000		

		CATCHMENT	CUMULATIVE		
Area (ac)	=	0.0	0.0		
Drainage Time (min)	=	0.00	2.49		
Intensity (in/h)	=	0.00	9.92	TOTAL	UNIFORM
Runoff Coefficient	=	0.00	0.00	FLOW	CAPACITY
Rational Flow (cfs)	=	0.00	0.00	(cfs)	(cfs)
Known Flow (cfs)	=	8.40	8.40	8.40	10.96

Note: Upstream surcharge (ft) = 0.14

STORM SEWER INLET REPORT

FLOW RESULTS (cfs)

Flow from Catchment	=	0.00	PONDING WIDTH (ft)	=	0.00
Carryover from previous inlet	=	0.00	DEPTH AT CURB (ft)	=	0.00
Total flow to current inlet	=	0.00	EFFICIENCY (%)		
Intercepted by current inlet	=	0.00	Curb = *		
Bypassed by current inlet	=	0.00	Grate = *	Total =	-inf
			Slot = *		

INPUT PARAMETERS:

Inlet Type	= NONE IN SAG		Longitudinal Slope (ft/ft)	=	0.000
Gutter Width (ft)	=	0.000	Pavement Cross Slope (ft/ft)	=	0.000
Inlet n-value	=	0.016	Normal Gutter XSlope (ft/ft)	=	0.000
Downstream Inlet number	=	14	Gutter depression (in)	=	0.00

MAIN SDCP1 100YR STM/10YR TW

Data File : C1E10010.STM Return Period: 100 Yrs

Rainfall file: PHX1.RND I = 87.730/ (Tc + 10.500) ^ 0.850

LINE 18 STORM SEWER HYDRAULIC REPORT

Diameter (in) = 24 N = 0.015 Critical Depth (in) = 8.81

Length (ft) = 118 Kj (JLC) = 0.4 Downstream Line # = 17

	INVERT (ft)	DEPTH (in)	HGL (ft)	EGL (ft)	CROWN (ft)	NAT GND (ft)	AREA (ft^2)	VEL (ft/s)
UPSTREAM	1123.92	21.70	1125.73	1125.76	1125.92	1126.52	2.99	1.44
DNSTREAM	1123.49	24.00	1125.68	1125.71	1125.49	1128.71	3.14	1.37
SLOPE(%)	0.364		0.041	0.043		-1.856		

		CATCHMENT	CUMULATIVE		
Area (ac)	=	0.0	0.0		
Drainage Time (min)	=	0.00	1.09		
Intensity (in/h)	=	0.00	10.93	TOTAL	UNIFORM
Runoff Coefficient	=	0.00	0.00	FLOW	CAPACITY
Rational Flow (cfs)	=	0.00	0.00	(cfs)	(cfs)
Known Flow (cfs)	=	4.30	4.30	4.30	11.83

Note: Transitional flow exists in this line

STORM SEWER INLET REPORT

FLOW RESULTS (cfs)

Flow from Catchment	=	0.00	PONDING WIDTH (ft)	=	0.00
Carryover from previous inlet	=	0.00	DEPTH AT CURB (ft)	=	0.00
Total flow to current inlet	=	0.00	EFFICIENCY (%)		
Intercepted by current inlet	=	0.00	Curb = *		
Bypassed by current inlet	=	0.00	Grate = *	Total =	-inf
			Slot = *		

INPUT PARAMETERS:

Inlet Type	= NONE IN SAG		Longitudinal Slope (ft/ft)	=	0.000
Gutter Width (ft)	=	0.000	Pavement Cross Slope (ft/ft)	=	0.000
Inlet n-value	=	0.016	Normal Gutter XSlope (ft/ft)	=	0.000
Downstream Inlet number	=	15	Gutter depression (in)	=	0.00

MAIN SDCP1 100YR STM/10YR TW

Data File : C1E10010.STM Return Period: 100 Yrs

Rainfall file: PHX1.RND I = 87.730/ (Tc + 10.500) ^ 0.850

LINE 19 STORM SEWER HYDRAULIC REPORT

Diameter (in) = 24 N = 0.015 Critical Depth (in) = 4.84

Length (ft) = 29 Kj (JLC) = 0.0 Downstream Line # = 18

	INVERT (ft)	DEPTH (in)	HGL (ft)	EGL (ft)	CROWN (ft)	NAT GND (ft)	AREA (ft^2)	VEL (ft/s)
UPSTREAM	1124.01	20.70	1125.74	1125.74	1126.01	1126.52	2.88	0.45
DNSTREAM	1123.92	21.71	1125.73	1125.73	1125.92	1126.52	2.99	0.43
SLOPE(%)	0.310		0.019	0.020		0.000		

		CATCHMENT	CUMULATIVE		
Area (ac)	=	0.0	0.0		
Drainage Time (min)	=	0.00	0.00		
Intensity (in/h)	=	0.00	11.89	TOTAL	UNIFORM
Runoff Coefficient	=	0.00	0.00	FLOW	CAPACITY
Rational Flow (cfs)	=	0.00	0.00	(cfs)	(cfs)
Known Flow (cfs)	=	1.30	1.30	1.30	10.92

STORM SEWER INLET REPORT

FLOW RESULTS (cfs)

Flow from Catchment	=	0.00	PONDING WIDTH (ft)	=	0.00
Carryover from previous inlet	=	0.00	DEPTH AT CURB (ft)	=	0.00
Total flow to current inlet	=	0.00	EFFICIENCY (%)		
Intercepted by current inlet	=	0.00	Curb = *		
Bypassed by current inlet	=	0.00	Grate = *	Total =	-inf
			Slot = *		

INPUT PARAMETERS:

Inlet Type	= NONE IN SAG		Longitudinal Slope (ft/ft)	=	0.000
Gutter Width (ft)	=	0.000	Pavement Cross Slope (ft/ft)	=	0.000
Inlet n-value	=	0.016	Normal Gutter XSlope (ft/ft)	=	0.000
Downstream Inlet number	=	16	Gutter depression (in)	=	0.00

MAIN SDCP1 100YR STM/10YR TW

Data File : C1E10010.STM Return Period: 100 Yrs

Rainfall file: PHX1.RND I = 87.730/ (Tc + 10.500) ^ 0.850

LINE 20 STORM SEWER HYDRAULIC REPORT

Diameter (in) = 24 N = 0.015 Critical Depth (in) = 4.84

Length (ft) = 0 Kj (JLC) = 1.0 Downstream Line # = 19

	INVERT (ft)	DEPTH (in)	HGL (ft)	EGL (ft)	CROWN (ft)	NAT GND (ft)	AREA (ft^2)	VEL (ft/s)
UPSTREAM	1124.02	20.70	1125.75	1125.75	1126.02	1126.52	2.88	0.45
DNSTREAM	1124.02	20.62	1125.74	1125.74	1126.02	1126.52	2.87	0.45
SLOPE(%)	0.000		100.098	99.894		0.000		

		CATCHMENT	CUMULATIVE		
Area (ac)	=	0.0	0.0		
Drainage Time (min)	=	0.00	0.00		
Intensity (in/h)	=	0.00	11.89	TOTAL	UNIFORM
Runoff Coefficient	=	0.00	0.00	FLOW	CAPACITY
Rational Flow (cfs)	=	0.00	0.00	(cfs)	(cfs)
Known Flow (cfs)	=	1.30	1.30	1.30	0.00

STORM SEWER INLET REPORT

FLOW RESULTS (cfs)

Flow from Catchment	=	0.00	PONDING WIDTH (ft)	=	0.00
Carryover from previous inlet	=	0.00	DEPTH AT CURB (ft)	=	0.00
Total flow to current inlet	=	0.00	EFFICIENCY (%)		
Intercepted by current inlet	=	0.00	Curb = *		
Bypassed by current inlet	=	0.00	Grate = *	Total =	-inf
			Slot = *		

INPUT PARAMETERS:

Inlet Type	=	NONE IN SAG	Longitudinal Slope (ft/ft)	=	0.000
Gutter Width (ft)	=	0.000	Pavement Cross Slope (ft/ft)	=	0.000
Inlet n-value	=	0.016	Normal Gutter XSlope (ft/ft)	=	0.000
Downstream Inlet number	=	19	Gutter depression (in)	=	0.00

MAIN SDCP1 100YR STM/10YR TW

Data File : C1E10010.STM Return Period: 100 Yrs

Rainfall file: PHX1.RND I = 87.730/ (Tc + 10.500) ^ 0.850

LINE 21 STORM SEWER HYDRAULIC REPORT

Diameter (in) = 24 N = 0.015 Critical Depth (in) = 13.65

Length (ft) = 64 Kj (JLC) = 1.3 Downstream Line # = 2

	INVERT (ft)	DEPTH (in)	HGL (ft)	EGL (ft)	CROWN (ft)	NAT GND (ft)	AREA (ft^2)	VEL (ft/s)
UPSTREAM	1136.76	13.65	1137.90	1138.38	1138.76	1142.26	1.84	5.59
DNSTREAM	1115.50	24.00	1121.60	1121.77	1117.50	1123.20	3.14	3.28
SLOPE(%)	35.219		25.461	25.959		29.781		

		CATCHMENT	CUMULATIVE		
Area (ac)	=	0.0	0.0		
Drainage Time (min)	=	0.00	0.26		
Intensity (in/h)	=	0.00	11.64	TOTAL	UNIFORM
Runoff Coefficient	=	0.00	0.00	FLOW	CAPACITY
Rational Flow (cfs)	=	0.00	0.00	(cfs)	(cfs)
Known Flow (cfs)	=	10.32	10.32	10.32	116.33

Note: Transitional flow exists in this line

STORM SEWER INLET REPORT

FLOW RESULTS (cfs)

Flow from Catchment	=	0.00	PONDING WIDTH (ft)	=	0.00
Carryover from previous inlet	=	0.00	DEPTH AT CURB (ft)	=	0.00
Total flow to current inlet	=	0.00	EFFICIENCY (%)		
Intercepted by current inlet	=	0.00	Curb = *		
Bypassed by current inlet	=	0.00	Grate = *	Total =	-inf
			Slot = *		

INPUT PARAMETERS:

Inlet Type	= NONE IN SAG		Longitudinal Slope (ft/ft)	=	0.000
Gutter Width (ft)	=	0.000	Pavement Cross Slope (ft/ft)	=	0.000
Inlet n-value	=	0.016	Normal Gutter XSlope (ft/ft)	=	0.000
Downstream Inlet number	=	20	Gutter depression (in)	=	0.00

MAIN SDCP1 100YR STM/10YR TW

Data File : C1E10010.STM Return Period: 100 Yrs

Rainfall file: PHX1.RND I = 87.730/ (Tc + 10.500) ^ 0.850

LINE 22 STORM SEWER HYDRAULIC REPORT

Diameter (in) = 24 N = 0.015 Critical Depth (in) = 9.80

Length (ft) = 59 Kj (JLC) = 0.0 Downstream Line # = 21

	INVERT (ft)	DEPTH (in)	HGL (ft)	EGL (ft)	CROWN (ft)	NAT GND (ft)	AREA (ft^2)	VEL (ft/s)
UPSTREAM	1137.42	9.80	1138.25	1138.55	1139.42	1142.92	1.21	4.41
DNSTREAM	1136.86	12.68	1137.92	1138.07	1138.86	1142.26	1.68	3.16
SLOPE(%)	0.949		0.563	0.812		1.119		

		CATCHMENT	CUMULATIVE		
Area (ac)	=	0.0	0.0		
Drainage Time (min)	=	0.00	0.00		
Intensity (in/h)	=	0.00	11.89	TOTAL	UNIFORM
Runoff Coefficient	=	0.00	0.00	FLOW	CAPACITY
Rational Flow (cfs)	=	0.00	0.00	(cfs)	(cfs)
Known Flow (cfs)	=	5.32	5.32	5.32	19.10

STORM SEWER INLET REPORT

FLOW RESULTS (cfs)

Flow from Catchment	=	0.00	PONDING WIDTH (ft)	=	0.00
Carryover from previous inlet	=	0.00	DEPTH AT CURB (ft)	=	0.00
Total flow to current inlet	=	0.00	EFFICIENCY (%)		
Intercepted by current inlet	=	0.00	Curb = *		
Bypassed by current inlet	=	0.00	Grate = *	Total =	-inf
			Slot = *		

INPUT PARAMETERS:

Inlet Type	= NONE IN SAG		Longitudinal Slope (ft/ft)	=	0.000
Gutter Width (ft)	=	0.000	Pavement Cross Slope (ft/ft)	=	0.000
Inlet n-value	=	0.016	Normal Gutter XSlope (ft/ft)	=	0.000
Downstream Inlet number	=	21	Gutter depression (in)	=	0.00

MAIN SDCP1 100YR STM/10YR TW

Data File : C1E10010.STM Return Period: 100 Yrs

Rainfall file: PHX1.RND I = 87.730/ (Tc + 10.500) ^ 0.850

LINE 23 STORM SEWER HYDRAULIC REPORT

Diameter (in) = 24 N = 0.015 Critical Depth (in) = 13.51

Length (ft) = 40 Kj (JLC) = 1.3 Downstream Line # = 3

	INVERT (ft)	DEPTH (in)	HGL (ft)	EGL (ft)	CROWN (ft)	NAT GND (ft)	AREA (ft^2)	VEL (ft/s)
UPSTREAM	1133.03	13.51	1134.16	1134.63	1135.03	1138.53	1.82	5.55
DNSTREAM	1116.67	24.00	1122.02	1122.18	1118.67	1124.15	3.14	3.22
SLOPE(%)	44.820		30.340	31.133		35.950		

	CATCHMENT	CUMULATIVE		
Area (ac) =	0.0	0.0		
Drainage Time (min) =	0.00	0.26		
Intensity (in/h) =	0.00	11.64	TOTAL	UNIFORM
Runoff Coefficient =	0.00	0.00	FLOW	CAPACITY
Rational Flow (cfs) =	0.00	0.00	(cfs)	(cfs)
Known Flow (cfs) =	10.11	10.11	10.11	131.23

Note: Transitional flow exists in this line

STORM SEWER INLET REPORT

FLOW RESULTS (cfs)

Flow from Catchment =	0.00	PONDING WIDTH (ft) =	0.00
Carryover from previous inlet =	0.00	DEPTH AT CURB (ft) =	0.00
Total flow to current inlet =	0.00	EFFICIENCY (%)	
Intercepted by current inlet =	0.00	Curb = *	
Bypassed by current inlet =	0.00	Grate = * Total =	-inf
		Slot = *	

INPUT PARAMETERS:

Inlet Type	= NONE IN SAG	Longitudinal Slope (ft/ft) =	0.000
Gutter Width (ft) =	0.000	Pavement Cross Slope (ft/ft) =	0.000
Inlet n-value =	0.016	Normal Gutter XSlope (ft/ft) =	0.000
Downstream Inlet number =	22	Gutter depression (in) =	0.00

E-164

MAIN SDCP1 100YR STM/10YR TW

Data File : C1E10010.STM Return Period: 100 Yrs

Rainfall file: PHX1.RND I = 87.730/ (Tc + 10.500) ^ 0.850

LINE 24 STORM SEWER HYDRAULIC REPORT

Diameter (in) = 24 N = 0.015 Critical Depth (in) = 9.62

Length (ft) = 59 Kj (JLC) = 0.0 Downstream Line # = 23

	INVERT (ft)	DEPTH (in)	HGL (ft)	EGL (ft)	CROWN (ft)	NAT GND (ft)	AREA (ft^2)	VEL (ft/s)
UPSTREAM	1133.74	9.62	1134.55	1134.85	1135.74	1139.24	1.18	4.36
DNSTREAM	1133.13	12.54	1134.18	1134.32	1135.13	1138.53	1.66	3.09
SLOPE(%)	1.034		0.642	0.891		1.203		

		CATCHMENT	CUMULATIVE		
Area (ac)	=	0.0	0.0		
Drainage Time (min)	=	0.00	0.00		
Intensity (in/h)	=	0.00	11.89	TOTAL	UNIFORM
Runoff Coefficient	=	0.00	0.00	FLOW	CAPACITY
Rational Flow (cfs)	=	0.00	0.00	(cfs)	(cfs)
Known Flow (cfs)	=	5.13	5.13	5.13	19.93

STORM SEWER INLET REPORT

FLOW RESULTS (cfs)

Flow from Catchment	=	0.00	PONDING WIDTH (ft)	=	0.00	
Carryover from previous inlet	=	0.00	DEPTH AT CURB (ft)	=	0.00	
Total flow to current inlet	=	0.00	EFFICIENCY (%)			
Intercepted by current inlet	=	0.00	Curb =	*		
Bypassed by current inlet	=	0.00	Grate =	*	Total =	-inf
			Slot =	*		

INPUT PARAMETERS:

Inlet Type	= NONE IN SAG		Longitudinal Slope (ft/ft)	=	0.000
Gutter Width (ft)	=	0.000	Pavement Cross Slope (ft/ft)	=	0.000
Inlet n-value	=	0.016	Normal Gutter XSlope (ft/ft)	=	0.000
Downstream Inlet number	=	23	Gutter depression (in)	=	0.00

MAIN SDCP1 100YR STM/10YR TW

Data File : C1E10010.STM Return Period: 100 Yrs

Rainfall file: PHX1.RND I = 87.730/ (Tc + 10.500) ^ 0.850

LINE 25 STORM SEWER HYDRAULIC REPORT

Diameter (in) = 24 N = 0.015 Critical Depth (in) = 6.92

Length (ft) = 39 Kj (JLC) = 1.3 Downstream Line # = 4

	INVERT (ft)	DEPTH (in)	HGL (ft)	EGL (ft)	CROWN (ft)	NAT GND (ft)	AREA (ft²)	VEL (ft/s)
UPSTREAM	1130.95	6.92	1131.78	1131.97	1132.95	1136.45	0.75	3.54
DNSTREAM	1117.45	24.00	1122.20	1122.21	1119.45	1125.40	3.14	0.84
SLOPE(%)	36.896		24.554	25.024		28.333		

		CATCHMENT	CUMULATIVE		
Area (ac)	=	0.0	0.0		
Drainage Time (min)	=	0.00	0.00		
Intensity (in/h)	=	0.00	11.89	TOTAL	UNIFORM
Runoff Coefficient	=	0.00	0.00	FLOW	CAPACITY
Rational Flow (cfs)	=	0.00	0.00	(cfs)	(cfs)
Known Flow (cfs)	=	2.65	2.65	2.65	119.07

Note: Transitional flow exists in this line

STORM SEWER INLET REPORT

FLOW RESULTS (cfs)

Flow from Catchment	=	0.00	PONDING WIDTH (ft)	=	0.00	
Carryover from previous inlet	=	0.00	DEPTH AT CURB (ft)	=	0.00	
Total flow to current inlet	=	0.00	EFFICIENCY (%)			
Intercepted by current inlet	=	0.00	Curb =	*		
Bypassed by current inlet	=	0.00	Grate =	*	Total =	-inf
			Slot =	*		

INPUT PARAMETERS:

Inlet Type	= NONE IN SAG	Longitudinal Slope (ft/ft)	=	0.000
Gutter Width (ft)	= 0.000	Pavement Cross Slope (ft/ft)	=	0.000
Inlet n-value	= 0.016	Normal Gutter XSlope (ft/ft)	=	0.000
Downstream Inlet number	= 24	Gutter depression (in)	=	0.00

MAIN SDCP1 100YR STM/10YR TW

Data File : C1E10010.STM Return Period: 100 Yrs

Rainfall file: PHX1.RND I = 87.730/ (Tc + 10.500) ^ 0.850

LINE 26 STORM SEWER HYDRAULIC REPORT

Diameter (in) = 24 N = 0.015 Critical Depth (in) = 10.21

Length (ft) = 29 Kj (JLC) = 1.3 Downstream Line # = 5

	INVERT (ft)	DEPTH (in)	HGL (ft)	EGL (ft)	CROWN (ft)	NAT GND (ft)	AREA (ft^2)	VEL (ft/s)
UPSTREAM	1125.76	10.21	1126.61	1126.93	1127.76	1136.38	1.27	4.54
DNSTREAM	1117.70	24.00	1122.37	1122.42	1119.70	1125.45	3.14	1.84
SLOPE(%)	28.933		14.629	15.550		37.690		

		CATCHMENT	CUMULATIVE		
Area (ac)	=	0.0	0.0		
Drainage Time (min)	=	0.00	0.55		
Intensity (in/h)	=	0.00	11.38	TOTAL	UNIFORM
Runoff Coefficient	=	0.00	0.00	FLOW	CAPACITY
Rational Flow (cfs)	=	0.00	0.00	(cfs)	(cfs)
Known Flow (cfs)	=	5.78	5.78	5.78	105.44

Note: Transitional flow exists in this line

STORM SEWER INLET REPORT

FLOW RESULTS (cfs)

Flow from Catchment	=	0.00	PONDING WIDTH (ft)	=	0.00
Carryover from previous inlet	=	0.00	DEPTH AT CURB (ft)	=	0.00
Total flow to current inlet	=	0.00	EFFICIENCY (%)		
Intercepted by current inlet	=	0.00	Curb = *		
Bypassed by current inlet	=	0.00	Grate = *	Total =	-inf
			Slot = *		

INPUT PARAMETERS:

Inlet Type	= NONE IN SAG		Longitudinal Slope (ft/ft)	=	0.000
Gutter Width (ft)	=	0.000	Pavement Cross Slope (ft/ft)	=	0.000
Inlet n-value	=	0.016	Normal Gutter XSlope (ft/ft)	=	0.000
Downstream Inlet number	=	24	Gutter depression (in)	=	0.00

MAIN SDCP1 100YR STM/10YR TW

Data File : C1E10010.STM Return Period: 100 Yrs

Rainfall file: PHX1.RND I = 87.730/ (Tc + 10.500) ^ 0.850

LINE 27 STORM SEWER HYDRAULIC REPORT

Diameter (in) = 24 N = 0.015 Critical Depth (in) = 10.21

Length (ft) = 139 Kj (JLC) = 0.0 Downstream Line # = 26

	INVERT (ft)	DEPTH (in)	HGL (ft)	EGL (ft)	CROWN (ft)	NAT GND (ft)	AREA (ft²)	VEL (ft/s)
UPSTREAM	1126.46	11.29	1127.41	1127.66	1128.46	1131.96	1.45	3.98
DNSTREAM	1125.76	10.37	1126.62	1126.93	1127.76	1136.38	1.30	4.45
SLOPE(%)	0.504		0.566	0.522		-3.180		

		CATCHMENT	CUMULATIVE	TOTAL FLOW (cfs)	UNIFORM CAPACITY (cfs)
Area (ac)	=	0.0	0.0		
Drainage Time (min)	=	0.00	0.00		
Intensity (in/h)	=	0.00	11.89		
Runoff Coefficient	=	0.00	0.00		
Rational Flow (cfs)	=	0.00	0.00		
Known Flow (cfs)	=	5.78	5.78	5.78	13.91

STORM SEWER INLET REPORT

FLOW RESULTS (cfs)

Flow from Catchment	=	0.00	PONDING WIDTH (ft)	= 0.00
Carryover from previous inlet	=	0.00	DEPTH AT CURB (ft)	= 0.00
Total flow to current inlet	=	0.00	EFFICIENCY (%)	
Intercepted by current inlet	=	0.00	Curb = *	
Bypassed by current inlet	=	0.00	Grate = *	Total = -inf
			Slot = *	

INPUT PARAMETERS:

Inlet Type	= NONE IN SAG	Longitudinal Slope (ft/ft)	= 0.000
Gutter Width (ft)	= 0.000	Pavement Cross Slope (ft/ft)	= 0.000
Inlet n-value	= 0.016	Normal Gutter XSlope (ft/ft)	= 0.000
Downstream Inlet number	= 25	Gutter depression (in)	= 0.00

E-168

MAIN SDCP1 100YR STM/10YR TW

Data File : C1E10010.STM Return Period: 100 Yrs
Rainfall file: PHX1.RND I = 87.730/ (Tc + 10.500) ^ 0.850

LINE 28 STORM SEWER HYDRAULIC REPORT

Diameter (in) = 24 N = 0.015 Critical Depth (in) = 19.55
Length (ft) = 97 Kj (JLC) = 1.3 Downstream Line # = 7

	INVERT (ft)	DEPTH (in)	HGL (ft)	EGL (ft)	CROWN (ft)	NAT GND (ft)	AREA (ft^2)	VEL (ft/s)
UPSTREAM	1120.73	24.00	1123.88	1124.59	1122.73	1129.55	3.14	6.74
DNSTREAM	1118.14	24.00	1122.75	1123.46	1120.14	1128.00	3.14	6.74
SLOPE(%)	2.671		1.166	1.166		1.598		

		CATCHMENT	CUMULATIVE		
Area (ac)	=	0.0	0.0		
Drainage Time (min)	=	0.00	0.46		
Intensity (in/h)	=	0.00	11.46	TOTAL	UNIFORM
Runoff Coefficient	=	0.00	0.00	FLOW	CAPACITY
Rational Flow (cfs)	=	0.00	0.00	(cfs)	(cfs)
Known Flow (cfs)	=	21.17	21.17	21.17	32.04

Note: Upstream surcharge (ft) = 1.15

STORM SEWER INLET REPORT

FLOW RESULTS (cfs)
Flow from Catchment = 0.00
Carryover from previous inlet = 0.00
Total flow to current inlet = 0.00
Intercepted by current inlet = 0.00
Bypassed by current inlet = 0.00

PONDING WIDTH (ft) = 0.00
DEPTH AT CURB (ft) = 0.00
EFFICIENCY (%)
Curb = *
Grate = * Total = -inf
Slot = *

INPUT PARAMETERS:
Inlet Type = NONE IN SAG
Gutter Width (ft) = 0.000
Inlet n-value = 0.016
Downstream Inlet number = 26
Longitudinal Slope (ft/ft) = 0.000
Pavement Cross Slope (ft/ft) = 0.000
Normal Gutter XSlope (ft/ft) = 0.000
Gutter depression (in) = 0.00

E-169

MAIN SDCP1 100YR STM/10YR TW

Data File : C1E10010.STM Return Period: 100 Yrs

Rainfall file: PHX1.RND I = 87.730/ (Tc + 10.500) ^ 0.850

LINE 29 STORM SEWER HYDRAULIC REPORT

Diameter (in) = 24 N = 0.015 Critical Depth (in) = 13.92

Length (ft) = 95 Kj (JLC) = 0.0 Downstream Line # = 28

	INVERT (ft)	DEPTH (in)	HGL (ft)	EGL (ft)	CROWN (ft)	NAT GND (ft)	AREA (ft²)	VEL (ft/s)
UPSTREAM	1121.30	24.00	1124.20	1124.39	1123.30	1126.80	3.14	3.42
DNSTREAM	1120.83	24.00	1123.91	1124.09	1122.83	1129.55	3.14	3.42
SLOPE(%)	0.495		0.308	0.308		-2.895		

	CATCHMENT	CUMULATIVE		
Area (ac) =	0.0	0.0		
Drainage Time (min) =	0.00	0.00		
Intensity (in/h) =	0.00	11.89	TOTAL	UNIFORM
Runoff Coefficient =	0.00	0.00	FLOW	CAPACITY
Rational Flow (cfs) =	0.00	0.00	(cfs)	(cfs)
Known Flow (cfs) =	10.74	10.74	10.74	13.79

Note: Upstream surcharge (ft) = 0.90

STORM SEWER INLET REPORT

FLOW RESULTS (cfs)

Flow from Catchment = 0.00

Carryover from previous inlet = 0.00

Total flow to current inlet = 0.00

Intercepted by current inlet = 0.00

Bypassed by current inlet = 0.00

PONDING WIDTH (ft) = 0.00

DEPTH AT CURB (ft) = 0.00

EFFICIENCY (%)

Curb = *

Grate = * Total = -inf

Slot = *

INPUT PARAMETERS:

Inlet Type = NONE IN SAG

Gutter Width (ft) = 0.000

Inlet n-value = 0.016

Downstream Inlet number = 27

Longitudinal Slope (ft/ft) = 0.000

Pavement Cross Slope (ft/ft) = 0.000

Normal Gutter XSlope (ft/ft) = 0.000

Gutter depression (in) = 0.00

E-170

MAIN SDCP1 100YR STM/10YR TW

Data File : C1E10010.STM Return Period: 100 Yrs

Rainfall file: PHX1.RND I = 87.730/ (Tc + 10.500) ^ 0.850

LINE 30 STORM SEWER HYDRAULIC REPORT

Diameter (in) = 24 N = 0.015 Critical Depth (in) = 12.19

Length (ft) = 160 Kj (JLC) = 1.3 Downstream Line # = 9

	INVERT (ft)	DEPTH (in)	HGL (ft)	EGL (ft)	CROWN (ft)	NAT GND (ft)	AREA (ft^2)	VEL (ft/s)
UPSTREAM	1121.70	24.00	1123.98	1124.09	1123.70	1129.50	3.14	2.62
DNSTREAM	1120.10	24.00	1123.70	1123.81	1122.10	1129.10	3.14	2.62
SLOPE(%)	1.000		0.176	0.176		0.250		

		CATCHMENT	CUMULATIVE		
Area (ac)	=	0.0	0.0		
Drainage Time (min)	=	0.00	0.59		
Intensity (in/h)	=	0.00	11.35	TOTAL	UNIFORM
Runoff Coefficient	=	0.00	0.00	FLOW	CAPACITY
Rational Flow (cfs)	=	0.00	0.00	(cfs)	(cfs)
Known Flow (cfs)	=	8.23	8.23	8.23	19.60

Note: Upstream surcharge (ft) = 0.28

STORM SEWER INLET REPORT

FLOW RESULTS (cfs)

Flow from Catchment	=	0.00
Carryover from previous inlet	=	0.00
Total flow to current inlet	=	0.00
Intercepted by current inlet	=	0.00
Bypassed by current inlet	=	0.00

PONDING WIDTH (ft) = 0.00

DEPTH AT CURB (ft) = 0.00

EFFICIENCY (%)

Curb = *

Grate = * Total = -inf

Slot = *

INPUT PARAMETERS:

Inlet Type	=	NONE IN SAG	Longitudinal Slope (ft/ft)	=	0.000
Gutter Width (ft)	=	0.000	Pavement Cross Slope (ft/ft)	=	0.000
Inlet n-value	=	0.016	Normal Gutter XSlope (ft/ft)	=	0.000
Downstream Inlet number	=	28	Gutter depression (in)	=	0.00

MAIN SDCP1 100YR STM/10YR TW

Data File : C1E10010.STM Return Period: 100 Yrs

Rainfall file: PHX1.RND I = 87.730/ (Tc + 10.500) ^ 0.850

LINE 31 STORM SEWER HYDRAULIC REPORT

Diameter (in) = 24 N = 0.015 Critical Depth (in) = 5.59

Length (ft) = 65 Kj (JLC) = 1.3 Downstream Line # = 30

	INVERT (ft)	DEPTH (in)	HGL (ft)	EGL (ft)	CROWN (ft)	NAT GND (ft)	AREA (ft^2)	VEL (ft/s)
UPSTREAM	1124.07	5.59	1124.73	1124.88	1126.07	1129.57	0.56	3.11
DNSTREAM	1121.70	24.00	1124.12	1124.12	1123.70	1129.50	3.14	0.55
SLOPE(%)	3.649		0.941	1.166		0.108		

	CATCHMENT	CUMULATIVE		
Area (ac) =	0.0	0.0		
Drainage Time (min) =	0.00	0.00		
Intensity (in/h) =	0.00	11.89	TOTAL	UNIFORM
Runoff Coefficient =	0.00	0.00	FLOW	CAPACITY
Rational Flow (cfs) =	0.00	0.00	(cfs)	(cfs)
Known Flow (cfs) =	1.73	1.73	1.73	37.44

Note: Transitional flow exists in this line

STORM SEWER INLET REPORT

FLOW RESULTS (cfs)

Flow from Catchment = 0.00

Carryover from previous inlet = 0.00

Total flow to current inlet = 0.00

Intercepted by current inlet = 0.00

Bypassed by current inlet = 0.00

PONDING WIDTH (ft) = 0.00

DEPTH AT CURB (ft) = 0.00

EFFICIENCY (%)

Curb = *

Grate = * Total = -inf

Slot = *

INPUT PARAMETERS:

Inlet Type = NONE IN SAG

Gutter Width (ft) = 0.000

Inlet n-value = 0.016

Downstream Inlet number = 29

Longitudinal Slope (ft/ft) = 0.000

Pavement Cross Slope (ft/ft) = 0.000

Normal Gutter XSlope (ft/ft) = 0.000

Gutter depression (in) = 0.00

MAIN SDCP1 100YR STM/10YR TW

Data File : C1E10010.STM Return Period: 100 Yrs

Rainfall file: PHX1.RND I = 87.730/ (Tc + 10.500) ^ 0.850

LINE 32 STORM SEWER HYDRAULIC REPORT

Diameter (in) = 36 N = 0.015 Critical Depth (in) = 27.36

Length (ft) = 9 Kj (JLC) = 1.0 Downstream Line # = 10

	INVERT (ft)	DEPTH (in)	HGL (ft)	EGL (ft)	CROWN (ft)	NAT GND (ft)	AREA (ft^2)	VEL (ft/s)
UPSTREAM	1120.60	36.00	1124.63	1125.45	1123.60	1125.25	7.07	7.24
DNSTREAM	1120.12	36.00	1123.75	1124.56	1123.12	1129.00	7.07	7.24
SLOPE(%)	5.341		9.838	9.838		-41.667		

		CATCHMENT	CUMULATIVE		
Area (ac)	=	0.0	0.0		
Drainage Time (min)	=	0.00	0.00		
Intensity (in/h)	=	0.00	11.89	TOTAL	UNIFORM
Runoff Coefficient	=	0.00	0.00	FLOW	CAPACITY
Rational Flow (cfs)	=	0.00	0.00	(cfs)	(cfs)
Known Flow (cfs)	=	51.20	51.20	51.20	133.58

Note: Upstream surcharge (ft) = 1.03

STORM SEWER INLET REPORT

FLOW RESULTS (cfs)

Flow from Catchment	=	0.00
Carryover from previous inlet	=	0.00
Total flow to current inlet	=	0.00
Intercepted by current inlet	=	0.00
Bypassed by current inlet	=	0.00

PONDING WIDTH (ft) = 0.00

DEPTH AT CURB (ft) = 0.00

EFFICIENCY (%)

Curb = *

Grate = * Total = -inf

Slot = *

INPUT PARAMETERS:

Inlet Type	= NONE IN SAG	Longitudinal Slope (ft/ft)	= 0.000
Gutter Width (ft)	= 0.000	Pavement Cross Slope (ft/ft)	= 0.000
Inlet n-value	= 0.016	Normal Gutter XSlope (ft/ft)	= 0.000
Downstream Inlet number	= 30	Gutter depression (in)	= 0.00

MAIN SDCP1 100YR STM/10YR TW

Data File : C1E10010.STM Return Period: 100 Yrs

Rainfall file: PHX1.RND I = 87.730/ (Tc + 10.500) ^ 0.850

LINE 33 STORM SEWER HYDRAULIC REPORT

Diameter (in) = 24 N = 0.015 Critical Depth (in) = 6.84

Length (ft) = 114 Kj (JLC) = 1.3 Downstream Line # = 10

	INVERT (ft)	DEPTH (in)	HGL (ft)	EGL (ft)	CROWN (ft)	NAT GND (ft)	AREA (ft^2)	VEL (ft/s)
UPSTREAM	1126.09	6.84	1126.91	1127.10	1128.09	1131.59	0.74	3.51
DNSTREAM	1120.96	24.00	1123.79	1123.80	1122.96	1129.00	3.14	0.82
SLOPE(%)	4.505		2.738	2.896		2.272		

		CATCHMENT	CUMULATIVE		
Area (ac)	=	0.0	0.0		
Drainage Time (min)	=	0.00	0.00		
Intensity (in/h)	=	0.00	11.89	TOTAL	UNIFORM
Runoff Coefficient	=	0.00	0.00	FLOW	CAPACITY
Rational Flow (cfs)	=	0.00	0.00	(cfs)	(cfs)
Known Flow (cfs)	=	2.59	2.59	2.59	41.60

Note: Transitional flow exists in this line

STORM SEWER INLET REPORT

FLOW RESULTS (cfs)

Flow from Catchment	=	0.00	PONDING WIDTH (ft)	=	0.00
Carryover from previous inlet	=	0.00	DEPTH AT CURB (ft)	=	0.00
Total flow to current inlet	=	0.00	EFFICIENCY (%)		
Intercepted by current inlet	=	0.00	Curb = *		
Bypassed by current inlet	=	0.00	Grate = *	Total =	-inf
			Slot = *		

INPUT PARAMETERS:

Inlet Type	= NONE IN SAG		Longitudinal Slope (ft/ft)	=	0.000
Gutter Width (ft)	=	0.000	Pavement Cross Slope (ft/ft)	=	0.000
Inlet n-value	=	0.016	Normal Gutter XSlope (ft/ft)	=	0.000
Downstream Inlet number	=	31	Gutter depression (in)	=	0.00

MAIN SDCP1 100YR STM/10YR TW

Data File : C1E10010.STM Return Period: 100 Yrs

Rainfall file: PHX1.RND I = 87.730/ (Tc + 10.500) ^ 0.850

LINE 34 STORM SEWER HYDRAULIC REPORT

Diameter (in) = 24 N = 0.015 Critical Depth (in) = 5.47

Length (ft) = 43 Kj (JLC) = 1.3 Downstream Line # = 11

	INVERT (ft)	DEPTH (in)	HGL (ft)	EGL (ft)	CROWN (ft)	NAT GND (ft)	AREA (ft²)	VEL (ft/s)
UPSTREAM	1124.50	5.47	1125.15	1125.29	1126.50	1130.00	0.54	3.08
DNSTREAM	1121.41	24.00	1123.87	1123.87	1123.41	1129.00	3.14	0.53
SLOPE(%)	7.205		2.972	3.304		2.326		

		CATCHMENT	CUMULATIVE		
Area (ac)	=	0.0	0.0		
Drainage Time (min)	=	0.00	0.00		
Intensity (in/h)	=	0.00	11.89	TOTAL	UNIFORM
Runoff Coefficient	=	0.00	0.00	FLOW	CAPACITY
Rational Flow (cfs)	=	0.00	0.00	(cfs)	(cfs)
Known Flow (cfs)	=	1.66	1.66	1.66	52.61

Note: Transitional flow exists in this line

STORM SEWER INLET REPORT

FLOW RESULTS (cfs)

Flow from Catchment	=	0.00	PONDING WIDTH (ft)	=	0.00	
Carryover from previous inlet	=	0.00	DEPTH AT CURB (ft)	=	0.00	
Total flow to current inlet	=	0.00	EFFICIENCY (%)			
Intercepted by current inlet	=	0.00	Curb =	*		
Bypassed by current inlet	=	0.00	Grate =	*	Total =	-inf
			Slot =	*		

INPUT PARAMETERS:

Inlet Type	= NONE IN SAG		Longitudinal Slope (ft/ft)	=	0.000
Gutter Width (ft)	=	0.000	Pavement Cross Slope (ft/ft)	=	0.000
Inlet n-value	=	0.016	Normal Gutter XSlope (ft/ft)	=	0.000
Downstream Inlet number	=	32	Gutter depression (in)	=	0.00

MAIN SDCP1 100YR STM/10YR TW

Data File : C1E10010.STM Return Period: 100 Yrs

Rainfall file: PHX1.RND I = 87.730/ (Tc + 10.500) ^ 0.850

LINE 35 STORM SEWER HYDRAULIC REPORT

Diameter (in) = 24 N = 0.015 Critical Depth (in) = 13.81

Length (ft) = 125 Kj (JLC) = 1.3 Downstream Line # = 12

	INVERT (ft)	DEPTH (in)	HGL (ft)	EGL (ft)	CROWN (ft)	NAT GND (ft)	AREA (ft²)	VEL (ft/s)
UPSTREAM	1122.68	19.18	1124.28	1124.52	1124.68	1133.20	2.69	3.92
DNSTREAM	1121.65	24.00	1123.98	1124.15	1123.65	1129.80	3.14	3.36
SLOPE(%)	0.824		0.242	0.293		2.720		

		CATCHMENT	CUMULATIVE		
Area (ac)	=	0.0	0.0		
Drainage Time (min)	=	0.00	0.46		
Intensity (in/h)	=	0.00	11.47	TOTAL	UNIFORM
Runoff Coefficient	=	0.00	0.00	FLOW	CAPACITY
Rational Flow (cfs)	=	0.00	0.00	(cfs)	(cfs)
Known Flow (cfs)	=	10.56	10.56	10.56	17.79

Note: Transitional flow exists in this line

STORM SEWER INLET REPORT

FLOW RESULTS (cfs)

Flow from Catchment	=	0.00	PONDING WIDTH (ft)	=	0.00
Carryover from previous inlet	=	0.00	DEPTH AT CURB (ft)	=	0.00
Total flow to current inlet	=	0.00	EFFICIENCY (%)		
Intercepted by current inlet	=	0.00	Curb = *		
Bypassed by current inlet	=	0.00	Grate = *	Total =	-inf
			Slot = *		

INPUT PARAMETERS:

Inlet Type	= NONE IN SAG		Longitudinal Slope (ft/ft)	=	0.000
Gutter Width (ft)	=	0.000	Pavement Cross Slope (ft/ft)	=	0.000
Inlet n-value	=	0.016	Normal Gutter XSlope (ft/ft)	=	0.000
Downstream Inlet number	=	33	Gutter depression (in)	=	0.00

MAIN SDCP1 100YR STM/10YR TW

Data File : C1E10010.STM Return Period: 100 Yrs

Rainfall file: PHX1.RND I = 87.730/ (Tc + 10.500) ^ 0.850

LINE 36 STORM SEWER HYDRAULIC REPORT

Diameter (in) = 24 N = 0.015 Critical Depth (in) = 11.16

Length (ft) = 52 Kj (JLC) = 0.0 Downstream Line # = 35

	INVERT (ft)	DEPTH (in)	HGL (ft)	EGL (ft)	CROWN (ft)	NAT GND (ft)	AREA (ft^2)	VEL (ft/s)
UPSTREAM	1124.04	12.48	1125.08	1125.35	1126.04	1132.58	1.65	4.18
DNSTREAM	1123.78	11.16	1124.71	1125.07	1125.78	1133.20	1.43	4.82
SLOPE(%)	0.500		0.712	0.539		-1.192		

		CATCHMENT	CUMULATIVE		
Area (ac)	=	0.0	0.0		
Drainage Time (min)	=	0.00	0.27		
Intensity (in/h)	=	0.00	11.64	TOTAL	UNIFORM
Runoff Coefficient	=	0.00	0.00	FLOW	CAPACITY
Rational Flow (cfs)	=	0.00	0.00	(cfs)	(cfs)
Known Flow (cfs)	=	6.90	6.90	6.90	13.86

STORM SEWER INLET REPORT

FLOW RESULTS (cfs)

Flow from Catchment	=	0.00	PONDING WIDTH (ft)	=	0.00
Carryover from previous inlet	=	0.00	DEPTH AT CURB (ft)	=	0.00
Total flow to current inlet	=	0.00	EFFICIENCY (%)		
Intercepted by current inlet	=	0.00	Curb = *		
Bypassed by current inlet	=	0.00	Grate = *	Total =	-inf
			Slot = *		

INPUT PARAMETERS:

Inlet Type	= NONE IN SAG		Longitudinal Slope (ft/ft)	=	0.000
Gutter Width (ft)	=	0.000	Pavement Cross Slope (ft/ft)	=	0.000
Inlet n-value	=	0.016	Normal Gutter XSlope (ft/ft)	=	0.000
Downstream Inlet number	=	34	Gutter depression (in)	=	0.00

MAIN SDCP1 100YR STM/10YR TW

Data File : C1E10010.STM Return Period: 100 Yrs

Rainfall file: PHX1.RND I = 87.730/ (Tc + 10.500) ^ 0.850

LINE 37 STORM SEWER HYDRAULIC REPORT

Diameter (in) = 24 N = 0.015 Critical Depth (in) = 8.69

Length (ft) = 52 Kj (JLC) = 0.0 Downstream Line # = 36

	INVERT (ft)	DEPTH (in)	HGL (ft)	EGL (ft)	CROWN (ft)	NAT GND (ft)	AREA (ft²)	VEL (ft/s)
UPSTREAM	1124.43	8.80	1125.16	1125.41	1126.43	1129.93	1.04	4.00
DNSTREAM	1124.04	12.48	1125.08	1125.18	1126.04	1132.58	1.65	2.53
SLOPE(%)	0.750		0.161	0.448		-5.096		

		CATCHMENT	CUMULATIVE		
Area (ac)	=	0.0	0.0		
Drainage Time (min)	=	0.00	0.00		
Intensity (in/h)	=	0.00	11.89	TOTAL	UNIFORM
Runoff Coefficient	=	0.00	0.00	FLOW	CAPACITY
Rational Flow (cfs)	=	0.00	0.00	(cfs)	(cfs)
Known Flow (cfs)	=	4.18	4.18	4.18	16.98

STORM SEWER INLET REPORT

FLOW RESULTS (cfs)

Flow from Catchment	=	0.00	PONDING WIDTH (ft)	=	0.00
Carryover from previous inlet	=	0.00	DEPTH AT CURB (ft)	=	0.00
Total flow to current inlet	=	0.00	EFFICIENCY (%)		
Intercepted by current inlet	=	0.00	Curb = *		
Bypassed by current inlet	=	0.00	Grate = *	Total =	-inf
			Slot = *		

INPUT PARAMETERS:

Inlet Type	= NONE IN SAG		Longitudinal Slope (ft/ft)	=	0.000
Gutter Width (ft)	=	0.000	Pavement Cross Slope (ft/ft)	=	0.000
Inlet n-value	=	0.016	Normal Gutter XSlope (ft/ft)	=	0.000
Downstream Inlet number	=	35	Gutter depression (in)	=	0.00

MAIN SDCP1 100YR STM/10YR TW

Data File : C1E10010.STM Return Period: 100 Yrs

Rainfall file: PHX1.RND I = 87.730/ (Tc + 10.500) ^ 0.850

LINE 38 STORM SEWER HYDRAULIC REPORT

Diameter (in) = 24 N = 0.015 Critical Depth (in) = 4.73

Length (ft) = 39 Kj (JLC) = 1.3 Downstream Line # = 13

	INVERT (ft)	DEPTH (in)	HGL (ft)	EGL (ft)	CROWN (ft)	NAT GND (ft)	AREA (ft²)	VEL (ft/s)
UPSTREAM	1124.72	4.73	1125.28	1125.40	1126.72	1130.22	0.44	2.83
DNSTREAM	1121.42	24.00	1124.07	1124.07	1123.42	1130.10	3.14	0.39
SLOPE(%)	8.492		3.102	3.415		0.308		

		CATCHMENT	CUMULATIVE		
Area (ac)	=	0.0	0.0		
Drainage Time (min)	=	0.00	0.00		
Intensity (in/h)	=	0.00	11.89	TOTAL	UNIFORM
Runoff Coefficient	=	0.00	0.00	FLOW	CAPACITY
Rational Flow (cfs)	=	0.00	0.00	(cfs)	(cfs)
Known Flow (cfs)	=	1.24	1.24	1.24	57.12

Note: Transitional flow exists in this line

STORM SEWER INLET REPORT

FLOW RESULTS (cfs)

Flow from Catchment	=	0.00	PONDING WIDTH (ft)	=	0.00
Carryover from previous inlet	=	0.00	DEPTH AT CURB (ft)	=	0.00
Total flow to current inlet	=	0.00	EFFICIENCY (%)		
Intercepted by current inlet	=	0.00	Curb = *		
Bypassed by current inlet	=	0.00	Grate = *	Total =	-inf
			Slot = *		

INPUT PARAMETERS:

Inlet Type	= NONE IN SAG		Longitudinal Slope (ft/ft)	=	0.000
Gutter Width (ft)	=	0.000	Pavement Cross Slope (ft/ft)	=	0.000
Inlet n-value	=	0.016	Normal Gutter XSlope (ft/ft)	=	0.000
Downstream Inlet number	=	36	Gutter depression (in)	=	0.00

MAIN SDCP1 100YR STM/10YR TW

Data File : C1E10010.STM Return Period: 100 Yrs

Rainfall file: PHX1.RND I = 87.730/ (Tc + 10.500) ^ 0.850

LINE 39 STORM SEWER HYDRAULIC REPORT

Diameter (in) = 24 N = 0.015 Critical Depth (in) = 10.07

Length (ft) = 12 Kj (JLC) = 1.3 Downstream Line # = 15

	INVERT (ft)	DEPTH (in)	HGL (ft)	EGL (ft)	CROWN (ft)	NAT GND (ft)	AREA (ft^2)	VEL (ft/s)
UPSTREAM	1122.90	23.46	1124.92	1124.97	1124.90	1127.98	3.12	1.80
DNSTREAM	1122.84	24.00	1124.84	1124.89	1124.84	1128.35	3.14	1.79
SLOPE(%)	0.500		0.636	0.641		-3.083		

	CATCHMENT	CUMULATIVE		
Area (ac) =	0.0	0.0		
Drainage Time (min) =	0.00	0.00		
Intensity (in/h) =	0.00	11.89	TOTAL	UNIFORM
Runoff Coefficient =	0.00	0.00	FLOW	CAPACITY
Rational Flow (cfs) =	0.00	0.00	(cfs)	(cfs)
Known Flow (cfs) =	5.62	5.62	5.62	13.87

Note: Upstream surcharge (ft) = 0.02

STORM SEWER INLET REPORT

FLOW RESULTS (cfs)

Flow from Catchment =	0.00	PONDING WIDTH (ft) =	0.00
Carryover from previous inlet =	0.00	DEPTH AT CURB (ft) =	0.00
Total flow to current inlet =	0.00	EFFICIENCY (%)	
Intercepted by current inlet =	0.00	Curb = *	
Bypassed by current inlet =	0.00	Grate = *	Total = -inf
		Slot = *	

INPUT PARAMETERS:

Inlet Type	= NONE IN SAG	Longitudinal Slope (ft/ft)	= 0.000
Gutter Width (ft)	= 0.000	Pavement Cross Slope (ft/ft)	= 0.000
Inlet n-value	= 0.016	Normal Gutter XSlope (ft/ft)	= 0.000
Downstream Inlet number	= 37	Gutter depression (in)	= 0.00

CATCH BASIN 122 TO PIPE 143 DISCHARGE

STORM SEWER SUMMARY REPORT
MAIN SD2 10YR STM/ 0 TW
FILE: D2E10.STM

RAINFALL FILE: PHX1.RND 10 YEAR DESIGN STORM I = 50.790/ (Tc + 9.250) ^ 0.830

LINE ID		FLOW RATE INFO						PIPE INFO					HYDRAULIC INFO		
LINE#	DESCRIPTION DOWNLINE#	INC AR TOT AR (ac)	RUNOFFC WEIGHTD C	INLTIME Tc (min)	INLT I TOTL I (in/h)	INC CIA TOT CIA (cfs)	INPUTQ TOTALQ (cfs)	UNIFORM FLOWCAP (cfs)	SIZE/ TYPE (in)	INVERT UP/DOWN (ft)	PIPE LEN (ft)	NVAL INVSLOP (ft/ft)	HGLSLOPE JLC (ft/ft)	HYD GRD UP/DOWN (ft)	VEL UP/DOWN (ft/s)
1	Pipe #143	0.0	0.00	0.00	8.01	0.00	7.53		24D	1131.21	156	0.012	0.027	1131.80	9.81
	DNLN = 0	0.0	-nan	0.29	7.81	0.00	7.53	40.3	24D	1127.00		0.027	1.00	1127.59	9.81
2	Pipe #142	0.0	0.00	0.00	8.01	0.00	3.21		24D	1131.68	74	0.012	0.005	1132.27	4.21
	DNLN = 1	0.0	-nan	0.00	8.01	0.00	3.21	17.3	24D	1131.31		0.005	0.04	1131.89	4.21

MAIN SD2 10YR STM/ 0 TW

Data File : D2E10.STM Return Period: 10 Yrs

Rainfall file: PHX1.RND I = 50.790/ (Tc + 9.250) ^ 0.830

LINE 1 STORM SEWER HYDRAULIC REPORT

Diameter (in) = 24 N = 0.012 Critical Depth (in) = 11.66

Length (ft) = 156 Kj (JLC) = 1.0 Downstream Line # = OUTFALL

	INVERT (ft)	DEPTH (in)	HGL (ft)	EGL (ft)	CROWN (ft)	NAT GND (ft)	AREA (ft²)	VEL (ft/s)
UPSTREAM	1131.21	7.04	1131.80	1133.29	1133.21	1138.08	0.77	9.81
DNSTREAM	1127.00	7.04	1127.59	1129.08	1129.00	1129.50	0.77	9.81
SLOPE(%)	2.700		2.699	2.699		5.500		

		CATCHMENT	CUMULATIVE		
Area (ac)	=	0.0	0.0		
Drainage Time (min)	=	0.00	0.29		
Intensity (in/h)	=	0.00	7.81	TOTAL	UNIFORM
Runoff Coefficient	=	0.00	0.00	FLOW	CAPACITY
Rational Flow (cfs)	=	0.00	0.00	(cfs)	(cfs)
Known Flow (cfs)	=	7.53	7.53	7.53	40.26

Note: Supercritical flow detected - Normal depth assumed

STORM SEWER INLET REPORT

FLOW RESULTS (cfs)

Flow from Catchment	=	0.00	PONDING WIDTH (ft)	=	0.00
Carryover from previous inlet	=	0.00	DEPTH AT CURB (ft)	=	0.00
Total flow to current inlet	=	0.00	EFFICIENCY (%)		
Intercepted by current inlet	=	0.00	Curb = *		
Bypassed by current inlet	=	0.00	Grate = *	Total =	-inf
			Slot = *		

INPUT PARAMETERS:

Inlet Type	= NONE IN SAG		Longitudinal Slope (ft/ft)	=	0.000
Gutter Width (ft)	=	0.000	Pavement Cross Slope (ft/ft)	=	0.000
Inlet n-value	=	0.016	Normal Gutter XSlope (ft/ft)	=	0.000
Downstream Inlet number	=	0	Gutter depression (in)	=	0.00

E-182

MAIN SD2 10YR STM/ 0 TW

Data File : D2E10.STM Return Period: 10 Yrs
Rainfall file: PHX1.RND I = 50.790/ (Tc + 9.250) ^ 0.830

LINE 2 STORM SEWER HYDRAULIC REPORT

Diameter (in) = 24 N = 0.012 Critical Depth (in) = 7.61
Length (ft) = 74 Kj (JLC) = 0.0 Downstream Line # = 1

	INVERT (ft)	DEPTH (in)	HGL (ft)	EGL (ft)	CROWN (ft)	NAT GND (ft)	AREA (ft²)	VEL (ft/s)
UPSTREAM	1131.68	7.00	1132.27	1132.55	1133.68	1137.18	0.76	4.21
DNSTREAM	1131.31	7.00	1131.89	1132.17	1133.31	1138.08	0.76	4.21
SLOPE(%)	0.500		0.515	0.515		-1.216		

	CATCHMENT	CUMULATIVE		
Area (ac) =	0.0	0.0		
Drainage Time (min) =	0.00	0.00		
Intensity (in/h) =	0.00	8.01	TOTAL	UNIFORM
Runoff Coefficient =	0.00	0.00	FLOW	CAPACITY
Rational Flow (cfs) =	0.00	0.00	(cfs)	(cfs)
Known Flow (cfs) =	3.21	3.21	3.21	17.33

Note: Supercritical flow detected - Normal depth assumed

STORM SEWER INLET REPORT

FLOW RESULTS (cfs)
Flow from Catchment = 0.00
Carryover from previous inlet = 0.00
Total flow to current inlet = 0.00
Intercepted by current inlet = 0.00
Bypassed by current inlet = 0.00

PONDING WIDTH (ft) = 0.00
DEPTH AT CURB (ft) = 0.00
EFFICIENCY (%)
Curb = *
Grate = * Total = -inf
Slot = *

INPUT PARAMETERS:
Inlet Type = NONE IN SAG
Gutter Width (ft) = 0.000
Inlet n-value = 0.016
Downstream Inlet number = 1
Longitudinal Slope (ft/ft) = 0.000
Pavement Cross Slope (ft/ft) = 0.000
Normal Gutter XSlope (ft/ft) = 0.000
Gutter depression (in) = 0.00

CATCH BASIN 129 TO PIPE 154 DISCHARGE

STORM SEWER SUMMARY REPORT
MAIN SD3 10YR STM/ 0 TW
FILE: D3E10.STM

RAINFALL FILE: PHX1.RND 10 YEAR DESIGN STORM I = 50.790/ (Tc + 9.250) ^ 0.830

LINE ID		FLOW RATE INFO						PIPE INFO					HYDRAULIC INFO		
LINE#	DESCRIPTION DOWNLINE#	INC AR TOT AR (ac)	RUNOFFC WEIGHTD C	INLTIME Tc (min)	INLT I TOTL I (in/h)	INC CIA TOT CIA (cfs)	INPUTQ TOTALQ (cfs)	UNIFORM FLOWCAP (cfs)	SIZE/ TYPE (in)	INVERT UP/DOWN (ft)	PIPE LEN (ft)	NVAL INVSLOP (ft/ft)	HGLSLOPE JLC (ft/ft)	HYD GRD UP/DOWN (ft)	VEL UP/DOWN (ft/s)
1	Pipe #154	0.0	0.00	0.00	8.01	0.00	13.57		24D	1129.34	160	0.012	0.008	1130.46	7.48
	DNLN = 0	0.0	-nan	2.42	6.61	0.00	13.57	22.4	24D	1128.00		0.008	1.00	1129.12	7.48
2	Pipe #153	0.0	0.00	0.00	8.01	0.00	12.71		24D	1129.47	8	0.012	0.014	1130.82	5.64
	DNLN = 1	0.0	-nan	2.40	6.62	0.00	12.71	15.0	24D	1129.44		0.004	0.04	1130.70	6.08
3	Pipe #152	0.0	0.00	0.00	8.01	0.00	11.61		24D	1130.08	102	0.012	0.001	1131.59	4.56
	DNLN = 2	0.0	-nan	1.99	6.82	0.00	11.61	17.3	24D	1129.57		0.005	1.30	1131.46	3.78
4	Pipe #151	0.0	0.00	0.00	8.01	0.00	6.87		24D	1131.44	218	0.012	0.003	1132.37	4.81
	DNLN = 3	0.0	-nan	1.04	7.33	0.00	6.87	18.6	24D	1130.18		0.006	0.04	1131.61	2.87
5	Pipe #150	0.0	0.00	0.00	8.01	0.00	4.62		24D	1134.44	132	0.012	0.021	1135.20	4.21
	DNLN = 4	0.0	-nan	0.49	7.68	0.00	4.62	36.3	24D	1131.54		0.022	0.04	1132.38	3.68
6	Pipe #149	0.0	0.00	0.00	8.01	0.00	1.92		24D	1137.07	68	0.012	0.035	1137.57	3.21
	DNLN = 5	0.0	-nan	0.00	8.01	0.00	1.92	47.3	24D	1134.54		0.037	0.06	1135.22	2.05
7	Pipe #144	0.0	0.00	0.00	8.01	0.00	1.10		24D	1130.75	73	0.012	0.004	1131.14	2.74
	DNLN = 2	0.0	-nan	0.00	8.01	0.00	1.10	17.4	24D	1130.38		0.005	0.12	1130.88	1.80
8	Pipe #145	0.0	0.00	0.00	8.01	0.00	2.37		24D	1130.55	74	0.012	0.000	1132.03	0.96
	DNLN = 3	0.0	-nan	0.00	8.01	0.00	2.37	17.3	24D	1130.18		0.005	1.30	1132.01	0.79
9	Pipe #146	0.0	0.00	0.00	8.01	0.00	2.37		24D	1131.03	65	0.012	0.001	1131.94	1.84
	DNLN = 3	0.0	-nan	0.00	8.01	0.00	2.37	17.2	24D	1130.71		0.005	0.95	1131.90	1.22
10	Pipe #147	0.0	0.00	0.00	8.01	0.00	2.35		24D	1131.95	82	0.012	0.001	1132.91	1.73
	DNLN = 4	0.0	-nan	0.00	8.01	0.00	2.35	17.3	24D	1131.54		0.005	1.30	1132.84	1.09
11	Pipe #148	0.0	0.00	0.00	8.01	0.00	2.70		24D	1134.87	66	0.012	0.002	1135.72	2.84
	DNLN = 5	0.0	-nan	0.00	8.01	0.00	2.70	17.3	24D	1134.54		0.005	1.30	1135.56	1.68

NOTE: THIS STORM DRAIN IS DRAINING A SUMP CONDITION ON SR153 AND THE SYSTEM MUST BE ABLE TO HANDLE A 50-YEAR STORM EVENT. THE NEXT COMPUTER PRINT OUT IS FOR THE 50-YEAR STORM EVENT.

MAIN SD3 10YR STM/ 0 TW

Data File : D3E10.STM Return Period: 10 Yrs

Rainfall file: PHX1.RND I = 50.790/ (Tc + 9.250) ^ 0.830

LINE 1 STORM SEWER HYDRAULIC REPORT

Diameter (in) = 24 N = 0.012 Critical Depth (in) = 15.65

Length (ft) = 160 Kj (JLC) = 1.0 Downstream Line # = OUTFALL

	INVERT (ft)	DEPTH (in)	HGL (ft)	EGL (ft)	CROWN (ft)	NAT GND (ft)	AREA (ft^2)	VEL (ft/s)
UPSTREAM	1129.34	13.47	1130.46	1131.33	1131.34	1137.44	1.82	7.48
DNSTREAM	1128.00	13.47	1129.12	1129.99	1130.00	1131.00	1.82	7.48
SLOPE(%)	0.838		0.837	0.837		4.025		

		CATCHMENT	CUMULATIVE		
Area (ac)	=	0.0	0.0		
Drainage Time (min)	=	0.00	2.42		
Intensity (in/h)	=	0.00	6.61	TOTAL	UNIFORM
Runoff Coefficient	=	0.00	0.00	FLOW	CAPACITY
Rational Flow (cfs)	=	0.00	0.00	(cfs)	(cfs)
Known Flow (cfs)	=	13.57	13.57	13.57	22.42

Note: Supercritical flow detected - Normal depth assumed

STORM SEWER INLET REPORT

FLOW RESULTS (cfs)

Flow from Catchment	=	0.00
Carryover from previous inlet	=	0.00
Total flow to current inlet	=	0.00
Intercepted by current inlet	=	0.00
Bypassed by current inlet	=	0.00

PONDING WIDTH (ft) = 0.00

DEPTH AT CURB (ft) = 0.00

EFFICIENCY (%)

Curb = *

Grate = * Total = -inf

Slot = *

INPUT PARAMETERS:

Inlet Type	= NONE IN SAG	Longitudinal Slope (ft/ft)	= 0.000
Gutter Width (ft)	= 0.000	Pavement Cross Slope (ft/ft)	= 0.000
Inlet n-value	= 0.016	Normal Gutter XSlope (ft/ft)	= 0.000
Downstream Inlet number	= 0	Gutter depression (in)	= 0.00

MAIN SD3 10YR STM/ 0 TW

Data File : D3E10.STM Return Period: 10 Yrs

Rainfall file: PHX1.RND I = 50.790/ (Tc + 9.250) ^ 0.830

LINE 2 STORM SEWER HYDRAULIC REPORT

Diameter (in) = 24 N = 0.012 Critical Depth (in) = 15.15

Length (ft) = 8 Kj (JLC) = 0.0 Downstream Line # = 1

	INVERT (ft)	DEPTH (in)	HGL (ft)	EGL (ft)	CROWN (ft)	NAT GND (ft)	AREA (ft²)	VEL (ft/s)
UPSTREAM	1129.47	16.18	1130.82	1131.31	1131.47	1137.88	2.25	5.64
DNSTREAM	1129.44	15.15	1130.70	1131.28	1131.44	1137.44	2.09	6.08
SLOPE(%)	0.375		1.447	0.444		5.501		

	CATCHMENT	CUMULATIVE		
Area (ac) =	0.0	0.0		
Drainage Time (min) =	0.00	2.40		
Intensity (in/h) =	0.00	6.62	TOTAL	UNIFORM
Runoff Coefficient =	0.00	0.00	FLOW	CAPACITY
Rational Flow (cfs) =	0.00	0.00	(cfs)	(cfs)
Known Flow (cfs) =	12.71	12.71	12.71	15.01

STORM SEWER INLET REPORT

FLOW RESULTS (cfs)

Flow from Catchment = 0.00

Carryover from previous inlet = 0.00

Total flow to current inlet = 0.00

Intercepted by current inlet = 0.00

Bypassed by current inlet = 0.00

PONDING WIDTH (ft) = 0.00

DEPTH AT CURB (ft) = 0.00

EFFICIENCY (%)

Curb = *

Grate = * Total = -inf

Slot = *

INPUT PARAMETERS:

Inlet Type = NONE IN SAG

Gutter Width (ft) = 0.000

Inlet n-value = 0.016

Downstream Inlet number = 1

Longitudinal Slope (ft/ft) = 0.000

Pavement Cross Slope (ft/ft) = 0.000

Normal Gutter XSlope (ft/ft) = 0.000

Gutter depression (in) = 0.00

MAIN SD3 10YR STM/ 0 TW

Data File : D3E10.STM Return Period: 10 Yrs
Rainfall file: PHX1.RND I = 50.790/ (Tc + 9.250) ^ 0.830

LINE 3 STORM SEWER HYDRAULIC REPORT

Diameter (in) = 24 N = 0.012 Critical Depth (in) = 14.48
Length (ft) = 102 Kj (JLC) = 1.3 Downstream Line # = 2

	INVERT (ft)	DEPTH (in)	HGL (ft)	EGL (ft)	CROWN (ft)	NAT GND (ft)	AREA (ft^2)	VEL (ft/s)
UPSTREAM	1130.08	18.15	1131.59	1131.91	1132.08	1137.65	2.55	4.56
DNSTREAM	1129.57	22.69	1131.46	1131.68	1131.57	1137.88	3.07	3.78
SLOPE(%)	0.500		0.129	0.228		-0.225		

		CATCHMENT	CUMULATIVE	TOTAL FLOW (cfs)	UNIFORM CAPACITY (cfs)
Area (ac)	=	0.0	0.0		
Drainage Time (min)	=	0.00	1.99		
Intensity (in/h)	=	0.00	6.82		
Runoff Coefficient	=	0.00	0.00		
Rational Flow (cfs)	=	0.00	0.00		
Known Flow (cfs)	=	11.61	11.61	11.61	17.33

STORM SEWER INLET REPORT

FLOW RESULTS (cfs)
Flow from Catchment = 0.00
Carryover from previous inlet = 0.00
Total flow to current inlet = 0.00
Intercepted by current inlet = 0.00
Bypassed by current inlet = 0.00

PONDING WIDTH (ft) = 0.00
DEPTH AT CURB (ft) = 0.00
EFFICIENCY (%)
Curb = *
Grate = * Total = -inf
Slot = *

INPUT PARAMETERS:
Inlet Type = NONE IN SAG
Gutter Width (ft) = 0.000
Inlet n-value = 0.016
Downstream Inlet number = 2
Longitudinal Slope (ft/ft) = 0.000
Pavement Cross Slope (ft/ft) = 0.000
Normal Gutter XSlope (ft/ft) = 0.000
Gutter depression (in) = 0.00

E-187

MAIN SD3 10YR STM/ 0 TW

Data File : D3E10.STM Return Period: 10 Yrs

Rainfall file: PHX1.RND I = 50.790/ (Tc + 9.250) ^ 0.830

LINE 4 STORM SEWER HYDRAULIC REPORT

Diameter (in) = 24 N = 0.012 Critical Depth (in) = 11.14

Length (ft) = 218 Kj (JLC) = 0.0 Downstream Line # = 3

	INVERT (ft)	DEPTH (in)	HGL (ft)	EGL (ft)	CROWN (ft)	NAT GND (ft)	AREA (ft^2)	VEL (ft/s)
UPSTREAM	1131.44	11.14	1132.37	1132.73	1133.44	1139.25	1.43	4.81
DNSTREAM	1130.18	17.10	1131.61	1131.73	1132.18	1137.65	2.39	2.87
SLOPE(%)	0.578		0.350	0.456		0.734		

		CATCHMENT	CUMULATIVE		
Area (ac)	=	0.0	0.0		
Drainage Time (min)	=	0.00	1.04		
Intensity (in/h)	=	0.00	7.33	TOTAL	UNIFORM
Runoff Coefficient	=	0.00	0.00	FLOW	CAPACITY
Rational Flow (cfs)	=	0.00	0.00	(cfs)	(cfs)
Known Flow (cfs)	=	6.87	6.87	6.87	18.63

STORM SEWER INLET REPORT

FLOW RESULTS (cfs)

Flow from Catchment = 0.00

Carryover from previous inlet = 0.00

Total flow to current inlet = 0.00

Intercepted by current inlet = 0.00

Bypassed by current inlet = 0.00

PONDING WIDTH (ft) = 0.00

DEPTH AT CURB (ft) = 0.00

EFFICIENCY (%)

Curb = *

Grate = * Total = -inf

Slot = *

INPUT PARAMETERS:

Inlet Type = NONE IN SAG

Gutter Width (ft) = 0.000

Inlet n-value = 0.016

Downstream Inlet number = 3

Longitudinal Slope (ft/ft) = 0.000

Pavement Cross Slope (ft/ft) = 0.000

Normal Gutter XSlope (ft/ft) = 0.000

Gutter depression (in) = 0.00

E-188

MAIN SD3 10YR STM/ 0 TW

Data File : D3E10.STM Return Period: 10 Yrs

Rainfall file: PHX1.RND I = 50.790/ (Tc + 9.250) ^ 0.830

LINE 5 STORM SEWER HYDRAULIC REPORT

Diameter (in) = 24 N = 0.012 Critical Depth (in) = 9.13

Length (ft) = 132 Kj (JLC) = 0.0 Downstream Line # = 4

	INVERT (ft)	DEPTH (in)	HGL (ft)	EGL (ft)	CROWN (ft)	NAT GND (ft)	AREA (ft^2)	VEL (ft/s)
UPSTREAM	1134.44	9.13	1135.20	1135.48	1136.44	1141.51	1.10	4.21
DNSTREAM	1131.54	10.11	1132.38	1132.59	1133.54	1139.25	1.26	3.68
SLOPE(%)	2.197		2.135	2.185		1.712		

		CATCHMENT	CUMULATIVE		
Area (ac)	=	0.0	0.0		
Drainage Time (min)	=	0.00	0.49		
Intensity (in/h)	=	0.00	7.68	TOTAL	UNIFORM
Runoff Coefficient	=	0.00	0.00	FLOW	CAPACITY
Rational Flow (cfs)	=	0.00	0.00	(cfs)	(cfs)
Known Flow (cfs)	=	4.62	4.62	4.62	36.32

STORM SEWER INLET REPORT

FLOW RESULTS (cfs)

Flow from Catchment = 0.00

Carryover from previous inlet = 0.00

Total flow to current inlet = 0.00

Intercepted by current inlet = 0.00

Bypassed by current inlet = 0.00

PONDING WIDTH (ft) = 0.00

DEPTH AT CURB (ft) = 0.00

EFFICIENCY (%)

Curb = *

Grate = * Total = -inf

Slot = *

INPUT PARAMETERS:

Inlet Type = NONE IN SAG

Gutter Width (ft) = 0.000

Inlet n-value = 0.016

Downstream Inlet number = 4

Longitudinal Slope (ft/ft) = 0.000

Pavement Cross Slope (ft/ft) = 0.000

Normal Gutter XSlope (ft/ft) = 0.000

Gutter depression (in) = 0.00

MAIN SD3 10YR STM/ 0 TW

Data File : D3E10.STM Return Period: 10 Yrs

Rainfall file: PHX1.RND I = 50.790/ (Tc + 9.250) ^ 0.830

LINE 6 STORM SEWER HYDRAULIC REPORT

Diameter (in) = 24 N = 0.012 Critical Depth (in) = 5.89

Length (ft) = 68 Kj (JLC) = 0.1 Downstream Line # = 5

	INVERT (ft)	DEPTH (in)	HGL (ft)	EGL (ft)	CROWN (ft)	NAT GND (ft)	AREA (ft^2)	VEL (ft/s)
UPSTREAM	1137.07	5.89	1137.57	1137.73	1139.07	1142.57	0.60	3.21
DNSTREAM	1134.54	8.13	1135.22	1135.28	1136.54	1141.51	0.94	2.05
SLOPE(%)	3.723		3.460	3.599		1.559		

		CATCHMENT	CUMULATIVE		
Area (ac)	=	0.0	0.0		
Drainage Time (min)	=	0.00	0.00		
Intensity (in/h)	=	0.00	8.01	TOTAL	UNIFORM
Runoff Coefficient	=	0.00	0.00	FLOW	CAPACITY
Rational Flow (cfs)	=	0.00	0.00	(cfs)	(cfs)
Known Flow (cfs)	=	1.92	1.92	1.92	47.28

STORM SEWER INLET REPORT

FLOW RESULTS (cfs)

Flow from Catchment	=	0.00	PONDING WIDTH (ft)	=	0.00
Carryover from previous inlet	=	0.00	DEPTH AT CURB (ft)	=	0.00
Total flow to current inlet	=	0.00	EFFICIENCY (%)		
Intercepted by current inlet	=	0.00	Curb = *		
Bypassed by current inlet	=	0.00	Grate = *	Total =	-inf
			Slot = *		

INPUT PARAMETERS:

Inlet Type	= NONE IN SAG		Longitudinal Slope (ft/ft)	=	0.000
Gutter Width (ft)	=	0.000	Pavement Cross Slope (ft/ft)	=	0.000
Inlet n-value	=	0.016	Normal Gutter XSlope (ft/ft)	=	0.000
Downstream Inlet number	=	5	Gutter depression (in)	=	0.00

E-190

MAIN SD3 10YR STM/ 0 TW

Data File : D3E10.STM Return Period: 10 Yrs

Rainfall file: PHX1.RND I = 50.790/ (Tc + 9.250) ^ 0.830

LINE 7 STORM SEWER HYDRAULIC REPORT

Diameter (in) = 24 N = 0.012 Critical Depth (in) = 4.46

Length (ft) = 73 Kj (JLC) = 0.1 Downstream Line # = 2

	INVERT (ft)	DEPTH (in)	HGL (ft)	EGL (ft)	CROWN (ft)	NAT GND (ft)	AREA (ft^2)	VEL (ft/s)
UPSTREAM	1130.75	4.46	1131.14	1131.25	1132.75	1136.25	0.40	2.74
DNSTREAM	1130.38	5.97	1130.88	1130.93	1132.38	1137.88	0.61	1.80
SLOPE(%)	0.507		0.353	0.443		-2.233		

		CATCHMENT	CUMULATIVE	TOTAL FLOW (cfs)	UNIFORM CAPACITY (cfs)
Area (ac)	=	0.0	0.0		
Drainage Time (min)	=	0.00	0.00		
Intensity (in/h)	=	0.00	8.01		
Runoff Coefficient	=	0.00	0.00		
Rational Flow (cfs)	=	0.00	0.00		
Known Flow (cfs)	=	1.10	1.10	1.10	17.44

STORM SEWER INLET REPORT

FLOW RESULTS (cfs)

Flow from Catchment	=	0.00
Carryover from previous inlet	=	0.00
Total flow to current inlet	=	0.00
Intercepted by current inlet	=	0.00
Bypassed by current inlet	=	0.00

PONDING WIDTH (ft) = 0.00

DEPTH AT CURB (ft) = 0.00

EFFICIENCY (%)

Curb = *

Grate = * Total = -inf

Slot = *

INPUT PARAMETERS:

Inlet Type	= NONE IN SAG	Longitudinal Slope (ft/ft)	= 0.000
Gutter Width (ft)	= 0.000	Pavement Cross Slope (ft/ft)	= 0.000
Inlet n-value	= 0.016	Normal Gutter XSlope (ft/ft)	= 0.000
Downstream Inlet number	= 6	Gutter depression (in)	= 0.00

MAIN SD3 10YR STM/ 0 TW

Data File : D3E10.STM Return Period: 10 Yrs

Rainfall file: PHX1.RND I = 50.790/ (Tc + 9.250) ^ 0.830

LINE 8 STORM SEWER HYDRAULIC REPORT

Diameter (in) = 24 N = 0.012 Critical Depth (in) = 6.54

Length (ft) = 74 Kj (JLC) = 1.3 Downstream Line # = 3

	INVERT (ft)	DEPTH (in)	HGL (ft)	EGL (ft)	CROWN (ft)	NAT GND (ft)	AREA (ft^2)	VEL (ft/s)
UPSTREAM	1130.55	17.52	1132.03	1132.04	1132.55	1136.05	2.46	0.96
DNSTREAM	1130.18	21.97	1132.01	1132.02	1132.18	1137.65	3.01	0.79
SLOPE(%)	0.500		0.024	0.030		-2.162		

		CATCHMENT	CUMULATIVE		
Area (ac)	=	0.0	0.0		
Drainage Time (min)	=	0.00	0.00		
Intensity (in/h)	=	0.00	8.01	TOTAL	UNIFORM
Runoff Coefficient	=	0.00	0.00	FLOW	CAPACITY
Rational Flow (cfs)	=	0.00	0.00	(cfs)	(cfs)
Known Flow (cfs)	=	2.37	2.37	2.37	17.33

STORM SEWER INLET REPORT

FLOW RESULTS (cfs)

Flow from Catchment	=	0.00	PONDING WIDTH (ft)	=	0.00
Carryover from previous inlet	=	0.00	DEPTH AT CURB (ft)	=	0.00
Total flow to current inlet	=	0.00	EFFICIENCY (%)		
Intercepted by current inlet	=	0.00	Curb = *		
Bypassed by current inlet	=	0.00	Grate = *	Total =	-inf
			Slot = *		

INPUT PARAMETERS:

Inlet Type	= NONE IN SAG		Longitudinal Slope (ft/ft)	=	0.000
Gutter Width (ft)	=	0.000	Pavement Cross Slope (ft/ft)	=	0.000
Inlet n-value	=	0.016	Normal Gutter XSlope (ft/ft)	=	0.000
Downstream Inlet number	=	7	Gutter depression (in)	=	0.00

MAIN SD3 10YR STM/ 0 TW

Data File : D3E10.STM Return Period: 10 Yrs

Rainfall file: PHX1.RND I = 50.790/ (Tc + 9.250) ^ 0.830

LINE 9 STORM SEWER HYDRAULIC REPORT

Diameter (in) = 24 N = 0.012 Critical Depth (in) = 6.54

Length (ft) = 65 Kj (JLC) = 0.9 Downstream Line # = 3

	INVERT (ft)	DEPTH (in)	HGL (ft)	EGL (ft)	CROWN (ft)	NAT GND (ft)	AREA (ft^2)	VEL (ft/s)
UPSTREAM	1131.03	10.30	1131.94	1131.99	1133.03	1136.53	1.29	1.84
DNSTREAM	1130.71	14.26	1131.90	1131.92	1132.71	1137.65	1.95	1.22
SLOPE(%)	0.492		0.061	0.106		-1.723		

		CATCHMENT	CUMULATIVE		
Area (ac)	=	0.0	0.0		
Drainage Time (min)	=	0.00	0.00		
Intensity (in/h)	=	0.00	8.01	TOTAL	UNIFORM
Runoff Coefficient	=	0.00	0.00	FLOW	CAPACITY
Rational Flow (cfs)	=	0.00	0.00	(cfs)	(cfs)
Known Flow (cfs)	=	2.37	2.37	2.37	17.19

STORM SEWER INLET REPORT

FLOW RESULTS (cfs)

Flow from Catchment	=	0.00	PONDING WIDTH (ft)	=	0.00
Carryover from previous inlet	=	0.00	DEPTH AT CURB (ft)	=	0.00
Total flow to current inlet	=	0.00	EFFICIENCY (%)		
Intercepted by current inlet	=	0.00	Curb = *		
Bypassed by current inlet	=	0.00	Grate = *	Total =	-inf
			Slot = *		

INPUT PARAMETERS:

Inlet Type	= NONE IN SAG		Longitudinal Slope (ft/ft)	=	0.000
Gutter Width (ft)	=	0.000	Pavement Cross Slope (ft/ft)	=	0.000
Inlet n-value	=	0.016	Normal Gutter XSlope (ft/ft)	=	0.000
Downstream Inlet number	=	8	Gutter depression (in)	=	0.00

MAIN SD3 10YR STM/ 0 TW

Data File : D3E10.STM Return Period: 10 Yrs

Rainfall file: PHX1.RND I = 50.790/ (Tc + 9.250) ^ 0.830

LINE 10 STORM SEWER HYDRAULIC REPORT

Diameter (in) = 24 N = 0.012 Critical Depth (in) = 6.51

Length (ft) = 82 Kj (JLC) = 1.3 Downstream Line # = 4

	INVERT (ft)	DEPTH (in)	HGL (ft)	EGL (ft)	CROWN (ft)	NAT GND (ft)	AREA (ft^2)	VEL (ft/s)
UPSTREAM	1131.95	10.74	1132.91	1132.95	1133.95	1137.45	1.36	1.73
DNSTREAM	1131.54	15.55	1132.84	1132.85	1133.54	1139.25	2.15	1.09
SLOPE(%)	0.500		0.085	0.119		-2.195		

		CATCHMENT	CUMULATIVE		
Area (ac)	=	0.0	0.0		
Drainage Time (min)	=	0.00	0.00		
Intensity (in/h)	=	0.00	8.01	TOTAL	UNIFORM
Runoff Coefficient	=	0.00	0.00	FLOW	CAPACITY
Rational Flow (cfs)	=	0.00	0.00	(cfs)	(cfs)
Known Flow (cfs)	=	2.35	2.35	2.35	17.32

STORM SEWER INLET REPORT

FLOW RESULTS (cfs)

Flow from Catchment	=	0.00	PONDING WIDTH (ft)	=	0.00
Carryover from previous inlet	=	0.00	DEPTH AT CURB (ft)	=	0.00
Total flow to current inlet	=	0.00	EFFICIENCY (%)		
Intercepted by current inlet	=	0.00	Curb = *		
Bypassed by current inlet	=	0.00	Grate = *	Total =	-inf
			Slot = *		

INPUT PARAMETERS:

Inlet Type	= NONE IN SAG		Longitudinal Slope (ft/ft)	=	0.000
Gutter Width (ft)	=	0.000	Pavement Cross Slope (ft/ft)	=	0.000
Inlet n-value	=	0.016	Normal Gutter XSlope (ft/ft)	=	0.000
Downstream Inlet number	=	9	Gutter depression (in)	=	0.00

MAIN SD3 10YR STM/ 0 TW

Data File : D3E10.STM Return Period: 10 Yrs

Rainfall file: PHX1.RND I = 50.790/ (Tc + 9.250) ^ 0.830

LINE 11 STORM SEWER HYDRAULIC REPORT

Diameter (in) = 24 N = 0.012 Critical Depth (in) = 6.98

Length (ft) = 66 Kj (JLC) = 1.3 Downstream Line # = 5

	INVERT (ft)	DEPTH (in)	HGL (ft)	EGL (ft)	CROWN (ft)	NAT GND (ft)	AREA (ft^2)	VEL (ft/s)
UPSTREAM	1134.87	8.21	1135.72	1135.84	1136.87	1140.37	0.95	2.84
DNSTREAM	1134.54	12.22	1135.56	1135.60	1136.54	1141.51	1.61	1.68
SLOPE(%)	0.500		0.240	0.364		-1.727		

		CATCHMENT	CUMULATIVE		
Area (ac)	=	0.0	0.0		
Drainage Time (min)	=	0.00	0.00		
Intensity (in/h)	=	0.00	8.01	TOTAL	UNIFORM
Runoff Coefficient	=	0.00	0.00	FLOW	CAPACITY
Rational Flow (cfs)	=	0.00	0.00	(cfs)	(cfs)
Known Flow (cfs)	=	2.70	2.70	2.70	17.32

STORM SEWER INLET REPORT

FLOW RESULTS (cfs)

Flow from Catchment	=	0.00	PONDING WIDTH (ft)	=	0.00
Carryover from previous inlet	=	0.00	DEPTH AT CURB (ft)	=	0.00
Total flow to current inlet	=	0.00	EFFICIENCY (%)		
Intercepted by current inlet	=	0.00	Curb = *		
Bypassed by current inlet	=	0.00	Grate = *	Total =	-inf
			Slot = *		

INPUT PARAMETERS:

Inlet Type	= NONE IN SAG		Longitudinal Slope (ft/ft)	=	0.000
Gutter Width (ft)	=	0.000	Pavement Cross Slope (ft/ft)	=	0.000
Inlet n-value	=	0.016	Normal Gutter XSlope (ft/ft)	=	0.000
Downstream Inlet number	=	10	Gutter depression (in)	=	0.00

CATCH BASIN 129 TO PIPE 154 DISCHARGE

STORM SEWER SUMMARY REPORT
MAIN SD3 50YR STM/ 0 TW
FILE: D3E50.STM

RAINFALL FILE: PHX1.RND 50 YEAR DESIGN STORM I = 76.630/ (Tc + 10.250) ^ 0.840

LINE ID		FLOW RATE INFO						PIPE INFO					HYDRAULIC INFO		
LINE#	DESCRIPTION DOWNLINE#	INC AR TOT AR (ac)	RUNOFFC WEIGHTD C	INLTIME Tc (min)	INLT I TOTL I (in/h)	INC CIA TOT CIA (cfs)	INPUTQ TOTALQ (cfs)	UNIFORM FLOWCAP (cfs)	SIZE/ TYPE (in)	INVERT UP/DOWN (ft)	PIPE LEN (ft)	NVAL INVSLOP (ft/ft)	HGLSLOPE JLC (ft/ft)	HYD GRD UP/DOWN (ft)	VEL UP/DOWN (ft/s)
1	Pipe #154	0.0	0.00	0.00	10.85	0.00	19.50		24D	1129.34	160	0.012	0.008	1130.78	8.04
	DNLN = 0	0.0	-nan	2.67	8.93	0.00	19.50	22.4	24D	1128.00		0.008	1.00	1129.44	8.04
2	Pipe #153	0.0	0.00	0.00	10.85	0.00	18.30		24D	1129.47	8	0.012	0.023	1131.14	6.54
	DNLN = 1	0.0	-nan	2.65	8.94	0.00	18.30	15.0	24D	1129.44		0.004	0.04	1130.95	7.17
3	Pipe #152	0.0	0.00	0.00	10.85	0.00	16.70		24D	1130.08	102	0.012	0.005	1132.47	5.32
	DNLN = 2	0.0	-nan	2.33	9.14	0.00	16.70	17.3	24D	1129.57		0.005	1.30	1132.00	5.32
4	Pipe #151	0.0	0.00	0.00	10.85	0.00	9.90		24D	1131.44	218	0.012	0.001	1132.80	4.37
	DNLN = 3	0.0	-nan	1.36	9.77	0.00	9.90	18.6	24D	1130.18		0.006	0.04	1132.49	3.15
5	Pipe #150	0.0	0.00	0.00	10.85	0.00	6.70		24D	1134.44	132	0.012	0.019	1135.36	4.77
	DNLN = 4	0.0	-nan	0.70	10.26	0.00	6.70	36.3	24D	1131.54		0.022	0.04	1132.81	3.19
6	Pipe #149	0.0	0.00	0.00	10.85	0.00	1.92		24D	1137.07	68	0.012	0.032	1137.57	3.21
	DNLN = 5	0.0	-nan	0.00	10.85	0.00	1.92	47.3	24D	1134.54		0.037	0.06	1135.38	1.54
7	Pipe #144	0.0	0.00	0.00	10.85	0.00	1.10		24D	1130.75	73	0.012	0.000	1131.23	1.91
	DNLN = 2	0.0	-nan	0.00	10.85	0.00	1.10	17.4	24D	1130.38		0.005	0.12	1131.22	0.88
8	Pipe #145	0.0	0.00	0.00	10.85	0.00	2.37		24D	1130.55	74	0.012	0.000	1133.06	0.75
	DNLN = 3	0.0	-nan	0.00	10.85	0.00	2.37	17.3	24D	1130.18		0.005	1.30	1133.04	0.75
9	Pipe #146	0.0	0.00	0.00	10.85	0.00	2.37		24D	1131.03	65	0.012	0.000	1132.91	0.78
	DNLN = 3	0.0	-nan	0.00	10.85	0.00	2.37	17.2	24D	1130.71		0.005	0.95	1132.89	0.75
10	Pipe #147	0.0	0.00	0.00	10.85	0.00	2.35		24D	1131.95	82	0.012	0.000	1133.21	1.16
	DNLN = 4	0.0	-nan	0.00	10.85	0.00	2.35	17.3	24D	1131.54		0.005	1.30	1133.18	0.85
11	Pipe #148	0.0	0.00	0.00	10.85	0.00	2.70		24D	1134.87	66	0.012	0.001	1135.88	1.86
	DNLN = 5	0.0	-nan	0.00	10.85	0.00	2.70	17.3	24D	1134.54		0.005	1.30	1135.82	1.28

NOTE: THIS STORM DRAIN IS DRAINING A SUMP CONDITION ON SR153 AND THE SYSTEM MUST BE ABLE TO HANDLE A 50-YEAR STORM EVENT. THIS COMPUTER PRINTOUT DEMONSTRATE THAT THE SYSTEM IS CAPABLE OF HANDLING THE 50-YEAR STORM EVENT. THE PREVIOUS COMPUTER PRINTOUT IS FOR THE 10-YEAR STORM EVENT. E-19.

MAIN SD3 50YR STM/ 0 TW

Data File : D3E50.STM Return Period: 50 Yrs

Rainfall file: PHX1.RND I = 76.630/ (Tc + 10.250) ^ 0.840

LINE 1 STORM SEWER HYDRAULIC REPORT

Diameter (in) = 24 N = 0.012 Critical Depth (in) = 18.76

Length (ft) = 160 Kj (JLC) = 1.0 Downstream Line # = OUTFALL

	INVERT (ft)	DEPTH (in)	HGL (ft)	EGL (ft)	CROWN (ft)	NAT GND (ft)	AREA (ft^2)	VEL (ft/s)
UPSTREAM	1129.34	17.31	1130.78	1131.79	1131.34	1137.44	2.43	8.04
DNSTREAM	1128.00	17.31	1129.44	1130.45	1130.00	1131.00	2.43	8.04
SLOPE(%)	0.838		0.837	0.837		4.025		

		CATCHMENT	CUMULATIVE		
Area (ac)	=	0.0	0.0		
Drainage Time (min)	=	0.00	2.67		
Intensity (in/h)	=	0.00	8.93	TOTAL	UNIFORM
Runoff Coefficient	=	0.00	0.00	FLOW	CAPACITY
Rational Flow (cfs)	=	0.00	0.00	(cfs)	(cfs)
Known Flow (cfs)	=	19.50	19.50	19.50	22.42

Note: Supercritical flow detected - Normal depth assumed

STORM SEWER INLET REPORT

FLOW RESULTS (cfs)

Flow from Catchment	=	0.00	PONDING WIDTH (ft)	=	0.00
Carryover from previous inlet	=	0.00	DEPTH AT CURB (ft)	=	0.00
Total flow to current inlet	=	0.00	EFFICIENCY (%)		
Intercepted by current inlet	=	0.00	Curb = *		
Bypassed by current inlet	=	0.00	Grate = *	Total =	-inf
			Slot = *		

INPUT PARAMETERS:

Inlet Type	= NONE IN SAG	Longitudinal Slope (ft/ft)	= 0.000
Gutter Width (ft)	= 0.000	Pavement Cross Slope (ft/ft)	= 0.000
Inlet n-value	= 0.016	Normal Gutter XSlope (ft/ft)	= 0.000
Downstream Inlet number	= 0	Gutter depression (in)	= 0.00

E-197

MAIN SD3 50YR STM/ 0 TW

Data File : D3E50.STM Return Period: 50 Yrs

Rainfall file: PHX1.RND I = 76.630/ (Tc + 10.250) ^ 0.840

LINE 2 STORM SEWER HYDRAULIC REPORT

Diameter (in) = 24 N = 0.012 Critical Depth (in) = 18.18

Length (ft) = 8 Kj (JLC) = 0.0 Downstream Line # = 1

	INVERT (ft)	DEPTH (in)	HGL (ft)	EGL (ft)	CROWN (ft)	NAT GND (ft)	AREA (ft^2)	VEL (ft/s)
UPSTREAM	1129.47	20.01	1131.14	1131.80	1131.47	1137.88	2.80	6.54
DNSTREAM	1129.44	18.18	1130.95	1131.75	1131.44	1137.44	2.55	7.17
SLOPE(%)	0.375		2.284	0.609		5.501		

		CATCHMENT	CUMULATIVE		
Area (ac)	=	0.0	0.0		
Drainage Time (min)	=	0.00	2.65		
Intensity (in/h)	=	0.00	8.94	TOTAL	UNIFORM
Runoff Coefficient	=	0.00	0.00	FLOW	CAPACITY
Rational Flow (cfs)	=	0.00	0.00	(cfs)	(cfs)
Known Flow (cfs)	=	18.30	18.30	18.30	15.01

STORM SEWER INLET REPORT

FLOW RESULTS (cfs)

Flow from Catchment	=	0.00
Carryover from previous inlet	=	0.00
Total flow to current inlet	=	0.00
Intercepted by current inlet	=	0.00
Bypassed by current inlet	=	0.00

PONDING WIDTH (ft) = 0.00

DEPTH AT CURB (ft) = 0.00

EFFICIENCY (%)

Curb = *

Grate = * Total = -inf

Slot = *

INPUT PARAMETERS:

Inlet Type	= NONE IN SAG	Longitudinal Slope (ft/ft)	= 0.000
Gutter Width (ft)	= 0.000	Pavement Cross Slope (ft/ft)	= 0.000
Inlet n-value	= 0.016	Normal Gutter XSlope (ft/ft)	= 0.000
Downstream Inlet number	= 1	Gutter depression (in)	= 0.00

MAIN SD3 50YR STM/ 0 TW

Data File : D3E50.STM Return Period: 50 Yrs
Rainfall file: PHX1.RND I = 76.630/ (Tc + 10.250) ^ 0.840

LINE 3 STORM SEWER HYDRAULIC REPORT

Diameter (in) = 24 N = 0.012 Critical Depth (in) = 17.36
Length (ft) = 102 Kj (JLC) = 1.3 Downstream Line # = 2

	INVERT (ft)	DEPTH (in)	HGL (ft)	EGL (ft)	CROWN (ft)	NAT GND (ft)	AREA (ft^2)	VEL (ft/s)
UPSTREAM	1130.08	24.00	1132.47	1132.91	1132.08	1137.65	3.14	5.32
DNSTREAM	1129.57	24.00	1132.00	1132.44	1131.57	1137.88	3.14	5.32
SLOPE(%)	0.500		0.465	0.465		-0.225		

		CATCHMENT	CUMULATIVE		
Area (ac)	=	0.0	0.0		
Drainage Time (min)	=	0.00	2.33		
Intensity (in/h)	=	0.00	9.14	TOTAL	UNIFORM
Runoff Coefficient	=	0.00	0.00	FLOW	CAPACITY
Rational Flow (cfs)	=	0.00	0.00	(cfs)	(cfs)
Known Flow (cfs)	=	16.70	16.70	16.70	17.33

Note: Upstream surcharge (ft) = 0.39

STORM SEWER INLET REPORT

FLOW RESULTS (cfs)
Flow from Catchment = 0.00
Carryover from previous inlet = 0.00
Total flow to current inlet = 0.00
Intercepted by current inlet = 0.00
Bypassed by current inlet = 0.00

PONDING WIDTH (ft) = 0.00
DEPTH AT CURB (ft) = 0.00
EFFICIENCY (%)
Curb = *
Grate = * Total = -inf
Slot = *

INPUT PARAMETERS:
Inlet Type = NONE IN SAG
Gutter Width (ft) = 0.000
Inlet n-value = 0.016
Downstream Inlet number = 2
Longitudinal Slope (ft/ft) = 0.000
Pavement Cross Slope (ft/ft) = 0.000
Normal Gutter XSlope (ft/ft) = 0.000
Gutter depression (in) = 0.00

E-199

MAIN SD3 50YR STM/ 0 TW

Data File : D3E50.STM Return Period: 50 Yrs
Rainfall file: PHX1.RND I = 76.630/ (Tc + 10.250) ^ 0.840

LINE 4 STORM SEWER HYDRAULIC REPORT

Diameter (in) = 24 N = 0.012 Critical Depth (in) = 13.37
Length (ft) = 218 Kj (JLC) = 0.0 Downstream Line # = 3

	INVERT (ft)	DEPTH (in)	HGL (ft)	EGL (ft)	CROWN (ft)	NAT GND (ft)	AREA (ft^2)	VEL (ft/s)
UPSTREAM	1131.44	16.28	1132.80	1133.09	1133.44	1139.25	2.27	4.37
DNSTREAM	1130.18	24.00	1132.49	1132.65	1132.18	1137.65	3.14	3.15
SLOPE(%)	0.578		0.140	0.205		0.734		

	CATCHMENT	CUMULATIVE		
Area (ac) =	0.0	0.0		
Drainage Time (min) =	0.00	1.36		
Intensity (in/h) =	0.00	9.77	TOTAL	UNIFORM
Runoff Coefficient =	0.00	0.00	FLOW	CAPACITY
Rational Flow (cfs) =	0.00	0.00	(cfs)	(cfs)
Known Flow (cfs) =	9.90	9.90	9.90	18.63

Note: Transitional flow exists in this line

STORM SEWER INLET REPORT

FLOW RESULTS (cfs)
Flow from Catchment = 0.00
Carryover from previous inlet = 0.00
Total flow to current inlet = 0.00
Intercepted by current inlet = 0.00
Bypassed by current inlet = 0.00

PONDING WIDTH (ft) = 0.00
DEPTH AT CURB (ft) = 0.00
EFFICIENCY (%)
Curb = *
Grate = * Total = -inf
Slot = *

INPUT PARAMETERS:
Inlet Type = NONE IN SAG
Gutter Width (ft) = 0.000
Inlet n-value = 0.016
Downstream Inlet number = 3
Longitudinal Slope (ft/ft) = 0.000
Pavement Cross Slope (ft/ft) = 0.000
Normal Gutter XSlope (ft/ft) = 0.000
Gutter depression (in) = 0.00

MAIN SD3 -50YR STM/ 0 TW

Data File : D3E50.STM Return Period: 50 Yrs
Rainfall file: PHX1.RND I = 76.630/ (Tc + 10.250) ^ 0.840

LINE 5 STORM SEWER HYDRAULIC REPORT

Diameter (in) = 24 N = 0.012 Critical Depth (in) = 11.00
Length (ft) = 132 Kj (JLC) = 0.0 Downstream Line # = 4

	INVERT (ft)	DEPTH (in)	HGL (ft)	EGL (ft)	CROWN (ft)	NAT GND (ft)	AREA (ft^2)	VEL (ft/s)
UPSTREAM	1134.44	11.00	1135.36	1135.71	1136.44	1141.51	1.40	4.77
DNSTREAM	1131.54	15.22	1132.81	1132.97	1133.54	1139.25	2.10	3.19
SLOPE(%)	2.197		1.931	2.079		1.712		

		CATCHMENT	CUMULATIVE		
Area (ac)	=	0.0	0.0		
Drainage Time (min)	=	0.00	0.70		
Intensity (in/h)	=	0.00	10.26	TOTAL	UNIFORM
Runoff Coefficient	=	0.00	0.00	FLOW	CAPACITY
Rational Flow (cfs)	=	0.00	0.00	(cfs)	(cfs)
Known Flow (cfs)	=	6.70	6.70	6.70	36.32

STORM SEWER INLET REPORT

FLOW RESULTS (cfs)
Flow from Catchment = 0.00
Carryover from previous inlet = 0.00
Total flow to current inlet = 0.00
Intercepted by current inlet = 0.00
Bypassed by current inlet = 0.00

PONDING WIDTH (ft) = 0.00
DEPTH AT CURB (ft) = 0.00
EFFICIENCY (%)
Curb = *
Grate = * Total = -inf
Slot = *

INPUT PARAMETERS:
Inlet Type = NONE IN SAG
Gutter Width (ft) = 0.000
Inlet n-value = 0.016
Downstream Inlet number = 4
Longitudinal Slope (ft/ft) = 0.000
Pavement Cross Slope (ft/ft) = 0.000
Normal Gutter XSlope (ft/ft) = 0.000
Gutter depression (in) = 0.00

MAIN SD3 50YR STM/ 0 TW

Data File : D3E50.STM Return Period: 50 Yrs

Rainfall file: PHX1.RND I = 76.630/ (Tc + 10.250) ^ 0.840

LINE 6 STORM SEWER HYDRAULIC REPORT

Diameter (in) = 24 N = 0.012 Critical Depth (in) = 5.89

Length (ft) = 68 Kj (JLC) = 0.1 Downstream Line # = 5

	INVERT (ft)	DEPTH (in)	HGL (ft)	EGL (ft)	CROWN (ft)	NAT GND (ft)	AREA (ft^2)	VEL (ft/s)
UPSTREAM	1137.07	5.89	1137.57	1137.73	1139.07	1142.57	0.60	3.21
DNSTREAM	1134.54	10.05	1135.38	1135.41	1136.54	1141.51	1.25	1.54
SLOPE(%)	3.723		3.224	3.406		1.559		

		CATCHMENT	CUMULATIVE		
Area (ac)	=	0.0	0.0		
Drainage Time (min)	=	0.00	0.00		
Intensity (in/h)	=	0.00	10.85	TOTAL	UNIFORM
Runoff Coefficient	=	0.00	0.00	FLOW	CAPACITY
Rational Flow (cfs)	=	0.00	0.00	(cfs)	(cfs)
Known Flow (cfs)	=	1.92	1.92	1.92	47.28

STORM SEWER INLET REPORT

FLOW RESULTS (cfs)

Flow from Catchment	=	0.00	PONDING WIDTH (ft)	=	0.00
Carryover from previous inlet	=	0.00	DEPTH AT CURB (ft)	=	0.00
Total flow to current inlet	=	0.00	EFFICIENCY (%)		
Intercepted by current inlet	=	0.00	Curb = *		
Bypassed by current inlet	=	0.00	Grate = *	Total =	-inf
			Slot = *		

INPUT PARAMETERS:

Inlet Type	= NONE IN SAG		Longitudinal Slope (ft/ft)	=	0.000
Gutter Width (ft)	=	0.000	Pavement Cross Slope (ft/ft)	=	0.000
Inlet n-value	=	0.016	Normal Gutter XSlope (ft/ft)	=	0.000
Downstream Inlet number	=	5	Gutter depression (in)	=	0.00

E-202

MAIN SD3 50YR STM/ 0 TW

Data File : D3E50.STM Return Period: 50 Yrs
Rainfall file: PHX1.RND I = 76.630/ (Tc + 10.250) ^ 0.840

LINE 7 STORM SEWER HYDRAULIC REPORT

Diameter (in) = 24 N = 0.012 Critical Depth (in) = 4.46
Length (ft) = 73 Kj (JLC) = 0.1 Downstream Line # = 2

	INVERT (ft)	DEPTH (in)	HGL (ft)	EGL (ft)	CROWN (ft)	NAT GND (ft)	AREA (ft^2)	VEL (ft/s)
UPSTREAM	1130.75	5.73	1131.23	1131.29	1132.75	1136.25	0.58	1.91
DNSTREAM	1130.38	10.04	1131.22	1131.23	1132.38	1137.88	1.25	0.88
SLOPE(%)	0.507		0.024	0.085		-2.233		

		CATCHMENT	CUMULATIVE		
Area (ac)	=	0.0	0.0		
Drainage Time (min)	=	0.00	0.00		
Intensity (in/h)	=	0.00	10.85	TOTAL	UNIFORM
Runoff Coefficient	=	0.00	0.00	FLOW	CAPACITY
Rational Flow (cfs)	=	0.00	0.00	(cfs)	(cfs)
Known Flow (cfs)	=	1.10	1.10	1.10	17.44

STORM SEWER INLET REPORT

FLOW RESULTS (cfs)
Flow from Catchment = 0.00
Carryover from previous inlet = 0.00
Total flow to current inlet = 0.00
Intercepted by current inlet = 0.00
Bypassed by current inlet = 0.00

PONDING WIDTH (ft) = 0.00
DEPTH AT CURB (ft) = 0.00
EFFICIENCY (%)
Curb = *
Grate = * Total = -inf
Slot = *

INPUT PARAMETERS:
Inlet Type = NONE IN SAG
Gutter Width (ft) = 0.000
Inlet n-value = 0.016
Downstream Inlet number = 6
Longitudinal Slope (ft/ft) = 0.000
Pavement Cross Slope (ft/ft) = 0.000
Normal Gutter XSlope (ft/ft) = 0.000
Gutter depression (in) = 0.00

E-203

MAIN SD3 50YR STM/ 0 TW

Data File : D3E50.STM Return Period: 50 Yrs

Rainfall file: PHX1.RND I = 76.630/ (Tc + 10.250) ^ 0.840

LINE 8 STORM SEWER HYDRAULIC REPORT

Diameter (in) = 24 N = 0.012 Critical Depth (in) = 6.54

Length (ft) = 74 Kj (JLC) = 1.3 Downstream Line # = 3

	INVERT (ft)	DEPTH (in)	HGL (ft)	EGL (ft)	CROWN (ft)	NAT GND (ft)	AREA (ft^2)	VEL (ft/s)
UPSTREAM	1130.55	24.00	1133.06	1133.07	1132.55	1136.05	3.14	0.75
DNSTREAM	1130.18	24.00	1133.04	1133.05	1132.18	1137.65	3.14	0.75
SLOPE(%)	0.500		0.025	0.025		-2.162		

		CATCHMENT	CUMULATIVE		
Area (ac)	=	0.0	0.0		
Drainage Time (min)	=	0.00	0.00		
Intensity (in/h)	=	0.00	10.85	TOTAL	UNIFORM
Runoff Coefficient	=	0.00	0.00	FLOW	CAPACITY
Rational Flow (cfs)	=	0.00	0.00	(cfs)	(cfs)
Known Flow (cfs)	=	2.37	2.37	2.37	17.33

Note: Upstream surcharge (ft) = 0.51

STORM SEWER INLET REPORT

FLOW RESULTS (cfs)

Flow from Catchment	=	0.00	PONDING WIDTH (ft)	=	0.00
Carryover from previous inlet	=	0.00	DEPTH AT CURB (ft)	=	0.00
Total flow to current inlet	=	0.00	EFFICIENCY (%)		
Intercepted by current inlet	=	0.00	Curb = *		
Bypassed by current inlet	=	0.00	Grate = *	Total =	-inf
			Slot = *		

INPUT PARAMETERS:

Inlet Type	= NONE IN SAG		Longitudinal Slope (ft/ft)	=	0.000
Gutter Width (ft)	=	0.000	Pavement Cross Slope (ft/ft)	=	0.000
Inlet n-value	=	0.016	Normal Gutter XSlope (ft/ft)	=	0.000
Downstream Inlet number	=	7	Gutter depression (in)	=	0.00

E-204

MAIN SD3 50YR STM/ 0 TW

Data File : D3E50.STM Return Period: 50 Yrs
Rainfall file: PHX1.RND I = 76.630/ (Tc + 10.250) ^ 0.840

LINE 9 STORM SEWER HYDRAULIC REPORT

Diameter (in) = 24 N = 0.012 Critical Depth (in) = 6.54
Length (ft) = 65 Kj (JLC) = 0.9 Downstream Line # = 3

	INVERT (ft)	DEPTH (in)	HGL (ft)	EGL (ft)	CROWN (ft)	NAT GND (ft)	AREA (ft^2)	VEL (ft/s)
UPSTREAM	1131.03	22.45	1132.91	1132.92	1133.03	1136.53	3.06	0.78
DNSTREAM	1130.71	24.00	1132.89	1132.90	1132.71	1137.65	3.14	0.75
SLOPE(%)	0.492		0.029	0.030		-1.723		

		CATCHMENT	CUMULATIVE		
Area (ac)	=	0.0	0.0		
Drainage Time (min)	=	0.00	0.00		
Intensity (in/h)	=	0.00	10.85	TOTAL	UNIFORM
Runoff Coefficient	=	0.00	0.00	FLOW	CAPACITY
Rational Flow (cfs)	=	0.00	0.00	(cfs)	(cfs)
Known Flow (cfs)	=	2.37	2.37	2.37	17.19

Note: Transitional flow exists in this line

STORM SEWER INLET REPORT

FLOW RESULTS (cfs)
Flow from Catchment = 0.00
Carryover from previous inlet = 0.00
Total flow to current inlet = 0.00
Intercepted by current inlet = 0.00
Bypassed by current inlet = 0.00

PONDING WIDTH (ft) = 0.00
DEPTH AT CURB (ft) = 0.00
EFFICIENCY (%)
Curb = *
Grate = * Total = -inf
Slot = *

INPUT PARAMETERS:
Inlet Type = NONE IN SAG
Gutter Width (ft) = 0.000
Inlet n-value = 0.016
Downstream Inlet number = 8
Longitudinal Slope (ft/ft) = 0.000
Pavement Cross Slope (ft/ft) = 0.000
Normal Gutter XSlope (ft/ft) = 0.000
Gutter depression (in) = 0.00

MAIN SD3 50YR STM/ 0 TW

Data File : D3E50.STM Return Period: 50 Yrs

Rainfall file: PHX1.RND I = 76.630/ (Tc + 10.250) ^ 0.840

LINE 10 STORM SEWER HYDRAULIC REPORT

Diameter (in) = 24 N = 0.012 Critical Depth (in) = 6.51

Length (ft) = 82 Kj (JLC) = 1.3 Downstream Line # = 4

	INVERT (ft)	DEPTH (in)	HGL (ft)	EGL (ft)	CROWN (ft)	NAT GND (ft)	AREA (ft^2)	VEL (ft/s)
UPSTREAM	1131.95	14.80	1133.21	1133.23	1133.95	1137.45	2.03	1.16
DNSTREAM	1131.54	19.69	1133.18	1133.19	1133.54	1139.25	2.76	0.85
SLOPE(%)	0.500		0.035	0.047		-2.195		

		CATCHMENT	CUMULATIVE		
Area (ac)	=	0.0	0.0		
Drainage Time (min)	=	0.00	0.00		
Intensity (in/h)	=	0.00	10.85	TOTAL	UNIFORM
Runoff Coefficient	=	0.00	0.00	FLOW	CAPACITY
Rational Flow (cfs)	=	0.00	0.00	(cfs)	(cfs)
Known Flow (cfs)	=	2.35	2.35	2.35	17.32

STORM SEWER INLET REPORT

FLOW RESULTS (cfs)

Flow from Catchment	=	0.00
Carryover from previous inlet	=	0.00
Total flow to current inlet	=	0.00
Intercepted by current inlet	=	0.00
Bypassed by current inlet	=	0.00

PONDING WIDTH (ft) = 0.00

DEPTH AT CURB (ft) = 0.00

EFFICIENCY (%)

Curb = *

Grate = * Total = -inf

Slot = *

INPUT PARAMETERS:

Inlet Type	= NONE IN SAG	Longitudinal Slope (ft/ft)	= 0.000
Gutter Width (ft)	= 0.000	Pavement Cross Slope (ft/ft)	= 0.000
Inlet n-value	= 0.016	Normal Gutter XSlope (ft/ft)	= 0.000
Downstream Inlet number	= 9	Gutter depression (in)	= 0.00

E-206

MAIN SD3 50YR STM/ 0 TW

Data File : D3E50.STM Return Period: 50 Yrs
Rainfall file: PHX1.RND I = 76.630/ (Tc + 10.250) ^ 0.840

LINE 11 STORM SEWER HYDRAULIC REPORT

Diameter (in) = 24 N = 0.012 Critical Depth (in) = 6.98
Length (ft) = 66 Kj (JLC) = 1.3 Downstream Line # = 5

	INVERT (ft)	DEPTH (in)	HGL (ft)	EGL (ft)	CROWN (ft)	NAT GND (ft)	AREA (ft^2)	VEL (ft/s)
UPSTREAM	1134.87	11.26	1135.88	1135.93	1136.87	1140.37	1.45	1.86
DNSTREAM	1134.54	15.31	1135.82	1135.84	1136.54	1141.51	2.12	1.28
SLOPE(%)	0.500		0.095	0.138		-1.727		

		CATCHMENT	CUMULATIVE		
Area (ac)	=	0.0	0.0		
Drainage Time (min)	=	0.00	0.00		
Intensity (in/h)	=	0.00	10.85	TOTAL	UNIFORM
Runoff Coefficient	=	0.00	0.00	FLOW	CAPACITY
Rational Flow (cfs)	=	0.00	0.00	(cfs)	(cfs)
Known Flow (cfs)	=	2.70	2.70	2.70	17.32

STORM SEWER INLET REPORT

FLOW RESULTS (cfs)
Flow from Catchment = 0.00
Carryover from previous inlet = 0.00
Total flow to current inlet = 0.00
Intercepted by current inlet = 0.00
Bypassed by current inlet = 0.00

PONDING WIDTH (ft) = 0.00
DEPTH AT CURB (ft) = 0.00
EFFICIENCY (%)
Curb = *
Grate = * Total = -inf
Slot = *

INPUT PARAMETERS:
Inlet Type = NONE IN SAG
Gutter Width (ft) = 0.000
Inlet n-value = 0.016
Downstream Inlet number = 10
Longitudinal Slope (ft/ft) = 0.000
Pavement Cross Slope (ft/ft) = 0.000
Normal Gutter XSlope (ft/ft) = 0.000
Gutter depression (in) = 0.00

Catch Basin 132 to Retention Basin 2

STORM SEWER SUMMARY REPORT
MAIN SD4 10YR STM/100YR TW
FILE: D4E10.STM

RAINFALL FILE: PHX1.RND 10 YEAR DESIGN STORM I = 50.790/ (Tc + 9.250) ^ 0.830

LINE ID		FLOW RATE INFO						PIPE INFO					HYDRAULIC INFO		
LINE#	DESCRIPTION DOWNLINE#	INC AR TOT AR (ac)	RUNOFFC WEIGHTD C	INLTIME Tc (min)	INLT I TOTL I (in/h)	INC CIA TOT CIA (cfs)	INPUTQ TOTALQ (cfs)	UNIFORM FLOWCAP (cfs)	SIZE/ TYPE (in)	INVERT UP/DOWN (ft)	PIPE LEN (ft)	NVAL INVSLOP (ft/ft)	HGLSLOPE JLC (ft/ft)	HYD GRD UP/DOWN (ft)	VEL UP/DOWN (ft/s)
1	Pipe #166P1	0.0	0.00	0.00	8.01	0.00	3.70		24D	1110.82	31	0.012	0.000	1113.74	1.18
	DNLN = 0	0.0	-nan	2.29	6.67	0.00	3.70	39.9	24D	1110.00		0.026	1.00	1113.73	1.18
2	Pipe 166P1	0.0	0.00	0.00	8.01	0.00	3.70		24D	1115.74	185	0.012	0.014	1116.42	3.92
	DNLN = 1	0.0	-nan	1.08	7.31	0.00	3.70	40.0	24D	1110.82		0.027	0.28	1113.74	1.18
3	Pipe #165P1	0.0	0.00	0.00	8.01	0.00	3.70		24D	1121.45	113	0.012	0.049	1121.80	9.86
	DNLN = 2	0.0	-nan	0.89	7.43	0.00	3.70	54.5	24D	1115.86		0.050	0.12	1116.21	9.86
4	Pipe #165P2	0.0	0.00	0.00	8.01	0.00	3.70		24D	1121.80	50	0.012	0.007	1122.38	4.95
	DNLN = 3	0.0	-nan	0.72	7.53	0.00	3.70	20.5	24D	1121.45		0.007	0.00	1122.03	4.95
5	Pipe #164	0.0	0.00	0.00	8.01	0.00	2.76		24D	1121.96	7	0.024	0.013	1122.89	2.18
	DNLN = 4	0.0	-nan	0.00	8.01	0.00	2.76	11.3	24D	1121.90		0.009	1.10	1122.79	2.03
6	Pipe #157	0.0	0.00	0.00	8.01	0.00	0.94		24D	1138.63	70	0.024	0.232	1139.11	2.62
	DNLN = 4	0.0	-nan	0.00	8.01	0.00	0.94	60.8	24D	1121.90		0.246	1.30	1122.87	0.62

Pipe Discharges to Ret. Basin 2.

100-year Water Surface Elev. = 1112.0

E-208

MAIN SD4 10YR STM/100YR TW

Data File : D4E10.STM Return Period: 10 Yrs

Rainfall file: PHX1.RND I = 50.790/ (Tc + 9.250) ^ 0.830

LINE 1 STORM SEWER HYDRAULIC REPORT

Diameter (in) = 24 N = 0.012 Critical Depth (in) = 8.17

Length (ft) = 31 Kj (JLC) = 1.0 Downstream Line # = OUTFALL

	INVERT (ft)	DEPTH (in)	HGL (ft)	EGL (ft)	CROWN (ft)	NAT GND (ft)	AREA (ft^2)	VEL (ft/s)
UPSTREAM	1110.82	24.00	1113.74	1113.76	1112.82	1117.00	3.14	1.18
DNSTREAM	1110.00	24.00	1113.73	1113.75	1112.00	1112.00	3.14	1.18
SLOPE(%)	2.646		0.023	0.023		16.129		

	CATCHMENT	CUMULATIVE		
Area (ac) =	0.0	0.0		
Drainage Time (min) =	0.00	2.29		
Intensity (in/h) =	0.00	6.67	TOTAL	UNIFORM
Runoff Coefficient =	0.00	0.00	FLOW	CAPACITY
Rational Flow (cfs) =	0.00	0.00	(cfs)	(cfs)
Known Flow (cfs) =	3.70	3.70	3.70	39.86

Note: Upstream surcharge (ft) = 0.92

STORM SEWER INLET REPORT

FLOW RESULTS (cfs)

Flow from Catchment = 0.00

Carryover from previous inlet = 0.00

Total flow to current inlet = 0.00

Intercepted by current inlet = 0.00

Bypassed by current inlet = 0.00

PONDING WIDTH (ft) = 0.00

DEPTH AT CURB (ft) = 0.00

EFFICIENCY (%)

Curb = *

Grate = * Total = -inf

Slot = *

INPUT PARAMETERS:

Inlet Type = NONE IN SAG

Gutter Width (ft) = 0.000

Inlet n-value = 0.016

Downstream Inlet number = 0

Longitudinal Slope (ft/ft) = 0.000

Pavement Cross Slope (ft/ft) = 0.000

Normal Gutter XSlope (ft/ft) = 0.000

Gutter depression (in) = 0.00

E-209

MAIN SD4 10YR STM/100YR TW

Data File : D4E10.STM Return Period: 10 Yrs

Rainfall file: PHX1.RND I = 50.790/ (Tc + 9.250) ^ 0.830

LINE 2 STORM SEWER HYDRAULIC REPORT

Diameter (in) = 24 N = 0.012 Critical Depth (in) = 8.17

Length (ft) = 185 Kj (JLC) = 0.3 Downstream Line # = 1

	INVERT (ft)	DEPTH (in)	HGL (ft)	EGL (ft)	CROWN (ft)	NAT GND (ft)	AREA (ft²)	VEL (ft/s)
UPSTREAM	1115.74	8.17	1116.42	1116.66	1117.74	1120.20	0.94	3.92
DNSTREAM	1110.82	24.00	1113.74	1113.76	1112.82	1117.00	3.14	1.18
SLOPE(%)	2.660		1.448	1.565		1.730		

		CATCHMENT	CUMULATIVE		
Area (ac)	=	0.0	0.0		
Drainage Time (min)	=	0.00	1.08		
Intensity (in/h)	=	0.00	7.31	TOTAL	UNIFORM
Runoff Coefficient	=	0.00	0.00	FLOW	CAPACITY
Rational Flow (cfs)	=	0.00	0.00	(cfs)	(cfs)
Known Flow (cfs)	=	3.70	3.70	3.70	39.97

Note: Transitional flow exists in this line

STORM SEWER INLET REPORT

FLOW RESULTS (cfs)

Flow from Catchment	=	0.00	PONDING WIDTH (ft)	=	0.00
Carryover from previous inlet	=	0.00	DEPTH AT CURB (ft)	=	0.00
Total flow to current inlet	=	0.00	EFFICIENCY (%)		
Intercepted by current inlet	=	0.00	Curb = *		
Bypassed by current inlet	=	0.00	Grate = *	Total =	-inf
			Slot = *		

INPUT PARAMETERS:

Inlet Type	= NONE IN SAG		Longitudinal Slope (ft/ft)	=	0.000
Gutter Width (ft)	=	0.000	Pavement Cross Slope (ft/ft)	=	0.000
Inlet n-value	=	0.016	Normal Gutter XSlope (ft/ft)	=	0.000
Downstream Inlet number	=	1	Gutter depression (in)	=	0.00

MAIN SD4 10YR STM/100YR TW

Data File : D4E10.STM Return Period: 10 Yrs
Rainfall file: PHX1.RND I = 50.790/ (Tc + 9.250) ^ 0.830

LINE 3 STORM SEWER HYDRAULIC REPORT

Diameter (in) = 24 N = 0.012 Critical Depth (in) = 8.17
Length (ft) = 113 Kj (JLC) = 0.1 Downstream Line # = 2

	INVERT (ft)	DEPTH (in)	HGL (ft)	EGL (ft)	CROWN (ft)	NAT GND (ft)	AREA (ft^2)	VEL (ft/s)
UPSTREAM	1121.45	4.25	1121.80	1123.31	1123.45	1127.00	0.38	9.86
DNSTREAM	1115.86	4.25	1116.21	1117.72	1117.86	1120.20	0.38	9.86
SLOPE(%)	4.953		4.947	4.947		6.018		

	CATCHMENT	CUMULATIVE		
Area (ac) =	0.0	0.0		
Drainage Time (min) =	0.00	0.89		
Intensity (in/h) =	0.00	7.43	TOTAL	UNIFORM
Runoff Coefficient =	0.00	0.00	FLOW	CAPACITY
Rational Flow (cfs) =	0.00	0.00	(cfs)	(cfs)
Known Flow (cfs) =	3.70	3.70	3.70	54.53

Note: Supercritical flow detected - Normal depth assumed

STORM SEWER INLET REPORT

FLOW RESULTS (cfs)
Flow from Catchment = 0.00
Carryover from previous inlet = 0.00
Total flow to current inlet = 0.00
Intercepted by current inlet = 0.00
Bypassed by current inlet = 0.00

PONDING WIDTH (ft) = 0.00
DEPTH AT CURB (ft) = 0.00
EFFICIENCY (%)
Curb = *
Grate = * Total = -inf
Slot = *

INPUT PARAMETERS:
Inlet Type = NONE IN SAG
Gutter Width (ft) = 0.000
Inlet n-value = 0.016
Downstream Inlet number = 1
Longitudinal Slope (ft/ft) = 0.000
Pavement Cross Slope (ft/ft) = 0.000
Normal Gutter XSlope (ft/ft) = 0.000
Gutter depression (in) = 0.00

MAIN SD4 10YR STM/100YR TW

Data File : D4E10.STM Return Period: 10 Yrs

Rainfall file: PHX1.RND I = 50.790/ (Tc + 9.250) ^ 0.830

LINE 4 STORM SEWER HYDRAULIC REPORT

Diameter (in) = 24 N = 0.012 Critical Depth (in) = 8.17

Length (ft) = 50 Kj (JLC) = 0.0 Downstream Line # = 3

	INVERT (ft)	DEPTH (in)	HGL (ft)	EGL (ft)	CROWN (ft)	NAT GND (ft)	AREA (ft^2)	VEL (ft/s)
UPSTREAM	1121.80	6.90	1122.38	1122.76	1123.80	1127.00	0.75	4.95
DNSTREAM	1121.45	6.90	1122.03	1122.41	1123.45	1127.00	0.75	4.95
SLOPE(%)	0.700		0.700	0.700		0.000		

		CATCHMENT	CUMULATIVE		
Area (ac)	=	0.0	0.0		
Drainage Time (min)	=	0.00	0.72		
Intensity (in/h)	=	0.00	7.53	TOTAL	UNIFORM
Runoff Coefficient	=	0.00	0.00	FLOW	CAPACITY
Rational Flow (cfs)	=	0.00	0.00	(cfs)	(cfs)
Known Flow (cfs)	=	3.70	3.70	3.70	20.50

Note: Supercritical flow detected - Normal depth assumed

STORM SEWER INLET REPORT

FLOW RESULTS (cfs)

Flow from Catchment	=	0.00	PONDING WIDTH (ft)	=	0.00
Carryover from previous inlet	=	0.00	DEPTH AT CURB (ft)	=	0.00
Total flow to current inlet	=	0.00	EFFICIENCY (%)		
Intercepted by current inlet	=	0.00	Curb = *		
Bypassed by current inlet	=	0.00	Grate = *	Total =	-inf
			Slot = *		

INPUT PARAMETERS:

Inlet Type	= NONE IN SAG		Longitudinal Slope (ft/ft)	=	0.000
Gutter Width (ft)	=	0.000	Pavement Cross Slope (ft/ft)	=	0.000
Inlet n-value	=	0.016	Normal Gutter XSlope (ft/ft)	=	0.000
Downstream Inlet number	=	2	Gutter depression (in)	=	0.00

MAIN SD4 10YR STM/100YR TW

Data File : D4E10.STM Return Period: 10 Yrs
Rainfall file: PHX1.RND I = 50.790/ (Tc + 9.250) ^ 0.830

LINE 5 STORM SEWER HYDRAULIC REPORT

Diameter (in) = 24 N = 0.024 Critical Depth (in) = 7.06
Length (ft) = 7 Kj (JLC) = 1.1 Downstream Line # = 4

	INVERT (ft)	DEPTH (in)	HGL (ft)	EGL (ft)	CROWN (ft)	NAT GND (ft)	AREA (ft^2)	VEL (ft/s)
UPSTREAM	1121.96	10.15	1122.89	1122.96	1123.96	1125.06	1.26	2.18
DNSTREAM	1121.90	10.72	1122.79	1122.86	1123.90	1127.00	1.36	2.03
SLOPE(%)	0.856		1.341	1.482		-27.713		

		CATCHMENT	CUMULATIVE		
Area (ac)	=	0.0	0.0		
Drainage Time (min)	=	0.00	0.00		
Intensity (in/h)	=	0.00	8.01	TOTAL	UNIFORM
Runoff Coefficient	=	0.00	0.00	FLOW	CAPACITY
Rational Flow (cfs)	=	0.00	0.00	(cfs)	(cfs)
Known Flow (cfs)	=	2.76	2.76	2.76	11.34

STORM SEWER INLET REPORT

FLOW RESULTS (cfs)
Flow from Catchment = 0.00
Carryover from previous inlet = 0.00
Total flow to current inlet = 0.00
Intercepted by current inlet = 0.00
Bypassed by current inlet = 0.00

PONDING WIDTH (ft) = 0.00
DEPTH AT CURB (ft) = 0.00
EFFICIENCY (%)
Curb = *
Grate = * Total = -inf
Slot = *

INPUT PARAMETERS:
Inlet Type = NONE IN SAG
Gutter Width (ft) = 0.000
Inlet n-value = 0.016
Downstream Inlet number = 3
Longitudinal Slope (ft/ft) = 0.000
Pavement Cross Slope (ft/ft) = 0.000
Normal Gutter XSlope (ft/ft) = 0.000
Gutter depression (in) = 0.00

MAIN SD4 10YR STM/100YR TW

Data File : D4E10.STM Return Period: 10 Yrs

Rainfall file: PHX1.RND I = 50.790/ (Tc + 9.250) ^ 0.830

LINE 6 STORM SEWER HYDRAULIC REPORT

Diameter (in) = 24 N = 0.024 Critical Depth (in) = 4.12

Length (ft) = 70 Kj (JLC) = 1.3 Downstream Line # = 4

	INVERT (ft)	DEPTH (in)	HGL (ft)	EGL (ft)	CROWN (ft)	NAT GND (ft)	AREA (ft^2)	VEL (ft/s)
UPSTREAM	1138.63	4.12	1139.11	1139.22	1140.63	1144.13	0.36	2.62
DNSTREAM	1121.90	11.64	1122.87	1122.88	1123.90	1127.00	1.51	0.62
SLOPE(%)	24.613		23.203	23.346		24.471		

		CATCHMENT	CUMULATIVE		
Area (ac)	=	0.0	0.0		
Drainage Time (min)	=	0.00	0.00		
Intensity (in/h)	=	0.00	8.01	TOTAL	UNIFORM
Runoff Coefficient	=	0.00	0.00	FLOW	CAPACITY
Rational Flow (cfs)	=	0.00	0.00	(cfs)	(cfs)
Known Flow (cfs)	=	0.94	0.94	0.94	60.78

STORM SEWER INLET REPORT

FLOW RESULTS (cfs)

Flow from Catchment	=	0.00
Carryover from previous inlet	=	0.00
Total flow to current inlet	=	0.00
Intercepted by current inlet	=	0.00
Bypassed by current inlet	=	0.00

PONDING WIDTH (ft) = 0.00

DEPTH AT CURB (ft) = 0.00

EFFICIENCY (%)

Curb = *

Grate = * Total = -inf

Slot = *

INPUT PARAMETERS:

Inlet Type	= NONE IN SAG	Longitudinal Slope (ft/ft)	= 0.000
Gutter Width (ft)	= 0.000	Pavement Cross Slope (ft/ft)	= 0.000
Inlet n-value	= 0.016	Normal Gutter XSlope (ft/ft)	= 0.000
Downstream Inlet number	= 5	Gutter depression (in)	= 0.00

Catch Basin 130 To Retention Basin 3

STORM SEWER SUMMARY REPORT
MAIN SD5 10YR STM/100YR TW
FILE: D5E10.STM

RAINFALL FILE: PHX1.RND 10 YEAR DESIGN STORM I = 50.790/ (Tc + 9.250) ^ 0.830

LINE ID		FLOW RATE INFO						PIPE INFO					HYDRAULIC INFO		
LINE#	DESCRIPTION DOWNLINE#	INC AR TOT AR (ac)	RUNOFFC WEIGHTD C	INLTIME Tc (min)	INLT I TOTL I (in/h)	INC CIA TOT CIA (cfs)	INPUTQ TOTALQ (cfs)	UNIFORM FLOWCAP (cfs)	SIZE/ TYPE (in)	INVERT UP/DOWN (ft)	PIPE LEN (ft)	NVAL INVSLOP (ft/ft)	HGLSLOPE JLC (ft/ft)	HYD GRD UP/DOWN (ft)	VEL UP/DOWN (ft/s)
1	Pipe #156P1	0.0	0.00	0.00	8.01	0.00	6.21		24D	1129.11	58	0.024	0.280	1129.99	4.65
	DNLN = 0	0.0	-nan	0.64	7.58	0.00	6.21	68.1	24D	1112.00		0.309	1.00	1113.73	2.15
2	Pipe #156P2	0.0	0.00	0.00	8.01	0.00	6.21		24D	1129.16	75	0.012	0.001	1130.05	4.58
	DNLN = 1	0.0	-nan	0.32	7.79	0.00	6.21	17.4	24D	1128.78		0.005	0.00	1129.99	3.12
3	Pipe #155	0.0	0.00	0.00	8.01	0.00	3.02		24D	1129.55	59	0.012	0.002	1130.17	3.68
	DNLN = 2	0.0	-nan	0.00	8.01	0.00	3.02	17.2	24D	1129.26		0.005	0.04	1130.07	2.55

Pipe Discharges to Retention Basin 3.
100-Year water elev. = 1113.73
per "Final Drainage Report, Segment 8B," July 1992

MAIN SD5 10YR STM/100YR TW

Data File : D5E10.STM Return Period: 10 Yrs

Rainfall file: PHX1.RND I = 50.790/ (Tc + 9.250) ^ 0.830

LINE 1 STORM SEWER HYDRAULIC REPORT

Diameter (in) = 24 N = 0.024 Critical Depth (in) = 10.59

Length (ft) = 58 Kj (JLC) = 1.0 Downstream Line # = OUTFALL

	INVERT (ft)	DEPTH (in)	HGL (ft)	EGL (ft)	CROWN (ft)	NAT GND (ft)	AREA (ft^2)	VEL (ft/s)
UPSTREAM	1129.11	10.59	1129.99	1130.33	1131.11	1139.34	1.34	4.65
DNSTREAM	1112.00	20.76	1113.73	1113.80	1114.00	1114.50	2.89	2.15
SLOPE(%)	30.874		28.038	28.493		42.828		

		CATCHMENT	CUMULATIVE		
Area (ac)	=	0.0	0.0		
Drainage Time (min)	=	0.00	0.64		
Intensity (in/h)	=	0.00	7.58	TOTAL	UNIFORM
Runoff Coefficient	=	0.00	0.00	FLOW	CAPACITY
Rational Flow (cfs)	=	0.00	0.00	(cfs)	(cfs)
Known Flow (cfs)	=	6.21	6.21	6.21	68.07

STORM SEWER INLET REPORT

FLOW RESULTS (cfs)

Flow from Catchment	=	0.00	PONDING WIDTH (ft)	=	0.00
Carryover from previous inlet	=	0.00	DEPTH AT CURB (ft)	=	0.00
Total flow to current inlet	=	0.00	EFFICIENCY (%)		
Intercepted by current inlet	=	0.00	Curb = *		
Bypassed by current inlet	=	0.00	Grate = *	Total =	-inf
			Slot = *		

INPUT PARAMETERS:

Inlet Type	= NONE IN SAG		Longitudinal Slope (ft/ft)	=	0.000
Gutter Width (ft)	=	0.000	Pavement Cross Slope (ft/ft)	=	0.000
Inlet n-value	=	0.016	Normal Gutter XSlope (ft/ft)	=	0.000
Downstream Inlet number	=	2	Gutter depression (in)	=	0.00

E-216

MAIN SD5 10YR STM/100YR TW

Data File : D5E10.STM Return Period: 10 Yrs

Rainfall file: PHX1.RND I = 50.790/ (Tc + 9.250) ^ 0.830

LINE 2 STORM SEWER HYDRAULIC REPORT

Diameter (in) = 24 N = 0.012 Critical Depth (in) = 10.59

Length (ft) = 75 Kj (JLC) = 0.0 Downstream Line # = 1

	INVERT (ft)	DEPTH (in)	HGL (ft)	EGL (ft)	CROWN (ft)	NAT GND (ft)	AREA (ft^2)	VEL (ft/s)
UPSTREAM	1129.16	10.71	1130.05	1130.38	1131.16	1135.52	1.36	4.58
DNSTREAM	1128.78	14.55	1129.99	1130.14	1130.78	1139.34	1.99	3.12
SLOPE(%)	0.507		0.080	0.313		-5.093		

		CATCHMENT	CUMULATIVE		
Area (ac)	=	0.0	0.0		
Drainage Time (min)	=	0.00	0.32		
Intensity (in/h)	=	0.00	7.79	TOTAL	UNIFORM
Runoff Coefficient	=	0.00	0.00	FLOW	CAPACITY
Rational Flow (cfs)	=	0.00	0.00	(cfs)	(cfs)
Known Flow (cfs)	=	6.21	6.21	6.21	17.44

STORM SEWER INLET REPORT

FLOW RESULTS (cfs)

Flow from Catchment	=	0.00	PONDING WIDTH (ft)	=	0.00
Carryover from previous inlet	=	0.00	DEPTH AT CURB (ft)	=	0.00
Total flow to current inlet	=	0.00	EFFICIENCY (%)		
Intercepted by current inlet	=	0.00	Curb = *		
Bypassed by current inlet	=	0.00	Grate = *	Total =	-inf
			Slot = *		

INPUT PARAMETERS:

Inlet Type	= NONE IN SAG		Longitudinal Slope (ft/ft)	=	0.000
Gutter Width (ft)	=	0.000	Pavement Cross Slope (ft/ft)	=	0.000
Inlet n-value	=	0.016	Normal Gutter XSlope (ft/ft)	=	0.000
Downstream Inlet number	=	3	Gutter depression (in)	=	0.00

MAIN SD5 10YR STM/100YR TW

Data File : D5E10.STM Return Period: 10 Yrs

Rainfall file: PHX1.RND I = 50.790/ (Tc + 9.250) ^ 0.830

LINE 3 STORM SEWER HYDRAULIC REPORT

Diameter (in) = 24 N = 0.012 Critical Depth (in) = 7.38

Length (ft) = 59 Kj (JLC) = 0.0 Downstream Line # = 2

	INVERT (ft)	DEPTH (in)	HGL (ft)	EGL (ft)	CROWN (ft)	NAT GND (ft)	AREA (ft²)	VEL (ft/s)
UPSTREAM	1129.55	7.38	1130.17	1130.38	1131.55	1135.05	0.82	3.68
DNSTREAM	1129.26	9.67	1130.07	1130.17	1131.26	1135.52	1.18	2.55
SLOPE(%)	0.492		0.184	0.369		-0.797		

		CATCHMENT	CUMULATIVE		
Area (ac)	=	0.0	0.0		
Drainage Time (min)	=	0.00	0.00		
Intensity (in/h)	=	0.00	8.01	TOTAL	UNIFORM
Runoff Coefficient	=	0.00	0.00	FLOW	CAPACITY
Rational Flow (cfs)	=	0.00	0.00	(cfs)	(cfs)
Known Flow (cfs)	=	3.02	3.02	3.02	17.18

STORM SEWER INLET REPORT

FLOW RESULTS (cfs)

Flow from Catchment = 0.00

Carryover from previous inlet = 0.00

Total flow to current inlet = 0.00

Intercepted by current inlet = 0.00

Bypassed by current inlet = 0.00

PONDING WIDTH (ft) = 0.00

DEPTH AT CURB (ft) = 0.00

EFFICIENCY (%)

Curb = *

Grate = * Total = -inf

Slot = *

INPUT PARAMETERS:

Inlet Type = NONE IN SAG

Gutter Width (ft) = 0.000

Inlet n-value = 0.016

Downstream Inlet number = 4

Longitudinal Slope (ft/ft) = 0.000

Pavement Cross Slope (ft/ft) = 0.000

Normal Gutter XSlope (ft/ft) = 0.000

Gutter depression (in) = 0.00

E-218

CATCH BASIN 136 TO PIPE 170 DISCHARGE TO EXST CB

STORM SEWER SUMMARY REPORT
MAIN SD6 10YR STM/ 0 TW
FILE: D6E10.STM

RAINFALL FILE: PHX1.RND 10 YEAR DESIGN STORM I = 50.790/ (Tc + 9.250) ^ 0.830

LINE ID		FLOW RATE INFO						PIPE INFO					HYDRAULIC INFO		
LINE#	DESCRIPTION DOWNLINE#	INC AR TOT AR (ac)	RUNOFFC WEIGHTD C	INLTIME Tc (min)	INLT I TOTL I (in/h)	INC CIA TOT CIA (cfs)	INPUTQ TOTALQ (cfs)	UNIFORM FLOWCAP (cfs)	SIZE/ TYPE (in)	INVERT UP/DOWN (ft)	PIPE LEN (ft)	NVAL INVSLOP (ft/ft)	HGLSLOPE JLC (ft/ft)	HYD GRD UP/DOWN (ft)	VEL UP/DOWN (ft/s)
1	exst ds 170	0.0	0.00	0.00	8.01	0.00	7.94		24D	1112.50	197	0.012	0.044	1113.03	11.91
	DNLN = 0	0.0	-nan	1.11	7.29	0.00	7.94	51.6	24D	1103.76		0.044	0.96	1104.29	11.91
2	Pipe #170	0.0	0.00	0.00	8.01	0.00	5.13		18D	1112.62	58	0.012	0.002	1114.95	2.90
	DNLN = 1	0.0	-nan	0.78	7.49	0.00	5.13	4.0	18D	1112.55		0.001	0.82	1114.84	2.90
3	Pipe #160P1	0.0	0.00	0.00	8.01	0.00	2.19		18D	1112.69	4	0.024	0.001	1115.04	1.24
	DNLN = 2	0.0	-nan	0.73	7.53	0.00	2.19	4.0	18D	1112.67		0.005	0.58	1115.03	1.24
4	Pipe #169P2	0.0	0.00	0.00	8.01	0.00	2.19		18D	1112.96	54	0.024	0.002	1115.17	1.24
	DNLN = 3	0.0	-nan	0.00	8.01	0.00	2.19	4.0	18D	1112.69		0.005	1.03	1115.06	1.24

MAIN SD6 10YR STM/ 0 TW

Data File : D6E10.STM Return Period: 10 Yrs
Rainfall file: PHX1.RND I = 50.790/ (Tc + 9.250) ^ 0.830

LINE 1 STORM SEWER HYDRAULIC REPORT

Diameter (in) = 24 N = 0.012 Critical Depth (in) = 11.97
Length (ft) = 197 Kj (JLC) = 1.0 Downstream Line # = OUTFALL

	INVERT (ft)	DEPTH (in)	HGL (ft)	EGL (ft)	CROWN (ft)	NAT GND (ft)	AREA (ft^2)	VEL (ft/s)
UPSTREAM	1112.50	6.36	1113.03	1115.23	1114.50	1117.40	0.67	11.91
DNSTREAM	1103.76	6.36	1104.29	1106.49	1105.76	1118.00	0.67	11.91
SLOPE(%)	4.441		4.437	4.437		-0.305		

		CATCHMENT	CUMULATIVE		
Area (ac)	=	0.0	0.0		
Drainage Time (min)	=	0.00	1.11		
Intensity (in/h)	=	0.00	7.29	TOTAL	UNIFORM
Runoff Coefficient	=	0.00	0.00	FLOW	CAPACITY
Rational Flow (cfs)	=	0.00	0.00	(cfs)	(cfs)
Known Flow (cfs)	=	7.94	7.94	7.94	51.64

Note: Supercritical flow detected - Normal depth assumed

STORM SEWER INLET REPORT

FLOW RESULTS (cfs)
Flow from Catchment = 0.00
Carryover from previous inlet = 0.00
Total flow to current inlet = 0.00
Intercepted by current inlet = 0.00
Bypassed by current inlet = 0.00

PONDING WIDTH (ft) = 0.00
DEPTH AT CURB (ft) = 0.00
EFFICIENCY (%)
Curb = *
Grate = * Total = -inf
Slot = *

INPUT PARAMETERS:
Inlet Type = NONE IN SAG
Gutter Width (ft) = 0.000
Inlet n-value = 0.016
Downstream Inlet number = 5
Longitudinal Slope (ft/ft) = 0.000
Pavement Cross Slope (ft/ft) = 0.000
Normal Gutter XSlope (ft/ft) = 0.000
Gutter depression (in) = 0.00

F-220

MAIN SD6 10YR STM/ 0 TW

Data File : D6E10.STM Return Period: 10 Yrs

Rainfall file: PHX1.RND I = 50.790/ (Tc + 9.250) ^ 0.830

LINE 2 STORM SEWER HYDRAULIC REPORT

Diameter (in) = 18 N = 0.012 Critical Depth (in) = 10.37

Length (ft) = 58 Kj (JLC) = 0.8 Downstream Line # = 1

	INVERT (ft)	DEPTH (in)	HGL (ft)	EGL (ft)	CROWN (ft)	NAT GND (ft)	AREA (ft^2)	VEL (ft/s)
UPSTREAM	1112.62	18.00	1114.95	1115.09	1114.12	1115.24	1.77	2.90
DNSTREAM	1112.55	18.00	1114.84	1114.97	1114.05	1117.40	1.77	2.90
SLOPE(%)	0.121		0.203	0.203		-3.724		

	CATCHMENT	CUMULATIVE		
Area (ac) =	0.0	0.0		
Drainage Time (min) =	0.00	0.78		
Intensity (in/h) =	0.00	7.49	TOTAL	UNIFORM
Runoff Coefficient =	0.00	0.00	FLOW	CAPACITY
Rational Flow (cfs) =	0.00	0.00	(cfs)	(cfs)
Known Flow (cfs) =	5.13	5.13	5.13	3.95

Note: Upstream surcharge (ft) = 0.83

STORM SEWER INLET REPORT

FLOW RESULTS (cfs)

Flow from Catchment = 0.00

Carryover from previous inlet = 0.00

Total flow to current inlet = 0.00

Intercepted by current inlet = 0.00

Bypassed by current inlet = 0.00

PONDING WIDTH (ft) = 0.00

DEPTH AT CURB (ft) = 0.00

EFFICIENCY (%)

Curb = *

Grate = * Total = -inf

Slot = *

INPUT PARAMETERS:

Inlet Type = NONE IN SAG

Gutter Width (ft) = 0.000

Inlet n-value = 0.016

Downstream Inlet number = 6

Longitudinal Slope (ft/ft) = 0.000

Pavement Cross Slope (ft/ft) = 0.000

Normal Gutter XSlope (ft/ft) = 0.000

Gutter depression (in) = 0.00

MAIN SD6 10YR STM/ 0 TW

Data File : D6E10.STM Return Period: 10 Yrs

Rainfall file: PHX1.RND I = 50.790/ (Tc + 9.250) ^ 0.830

LINE 3 STORM SEWER HYDRAULIC REPORT

Diameter (in) = 18 N = 0.024 Critical Depth (in) = 6.78

Length (ft) = 4 Kj (JLC) = 0.6 Downstream Line # = 2

	INVERT (ft)	DEPTH (in)	HGL (ft)	EGL (ft)	CROWN (ft)	NAT GND (ft)	AREA (ft^2)	VEL (ft/s)
UPSTREAM	1112.69	18.00	1115.04	1115.06	1114.19	1115.24	1.77	1.24
DNSTREAM	1112.67	18.00	1115.03	1115.05	1114.17	1115.24	1.77	1.24
SLOPE(%)	0.497		0.150	0.150		0.000		

	CATCHMENT	CUMULATIVE		
Area (ac) =	0.0	0.0		
Drainage Time (min) =	0.00	0.73		
Intensity (in/h) =	0.00	7.53	TOTAL	UNIFORM
Runoff Coefficient =	0.00	0.00	FLOW	CAPACITY
Rational Flow (cfs) =	0.00	0.00	(cfs)	(cfs)
Known Flow (cfs) =	2.19	2.19	2.19	4.01

Note: Upstream surcharge (ft) = 0.85

STORM SEWER INLET REPORT

FLOW RESULTS (cfs)

Flow from Catchment = 0.00

Carryover from previous inlet = 0.00

Total flow to current inlet = 0.00

Intercepted by current inlet = 0.00

Bypassed by current inlet = 0.00

PONDING WIDTH (ft) = 0.00

DEPTH AT CURB (ft) = 0.00

EFFICIENCY (%)

Curb = *

Grate = * Total = -inf

Slot = *

INPUT PARAMETERS:

Inlet Type = NONE IN SAG

Gutter Width (ft) = 0.000

Inlet n-value = 0.016

Downstream Inlet number = 7

Longitudinal Slope (ft/ft) = 0.000

Pavement Cross Slope (ft/ft) = 0.000

Normal Gutter XSlope (ft/ft) = 0.000

Gutter depression (in) = 0.00

E-222

MAIN SD6 10YR STM/ 0 TW

Data File : D6E10.STM Return Period: 10 Yrs
Rainfall file: PHX1.RND I = 50.790/ (Tc + 9.250) ^ 0.830

LINE 4 STORM SEWER HYDRAULIC REPORT

Diameter (in) = 18 N = 0.024 Critical Depth (in) = 6.78
Length (ft) = 54 Kj (JLC) = 1.0 Downstream Line # = 3

	INVERT (ft)	DEPTH (in)	HGL (ft)	EGL (ft)	CROWN (ft)	NAT GND (ft)	AREA (ft^2)	VEL (ft/s)
UPSTREAM	1112.96	18.00	1115.17	1115.19	1114.46	1115.90	1.77	1.24
DNSTREAM	1112.69	18.00	1115.06	1115.08	1114.19	1115.24	1.77	1.24
SLOPE(%)	0:500		0.194	0.194		1.222		

	CATCHMENT	CUMULATIVE		
Area (ac) =	0.0	0.0		
Drainage Time (min) =	0.00	0.00		
Intensity (in/h) =	0.00	8.01	TOTAL	UNIFORM
Runoff Coefficient =	0.00	0.00	FLOW	CAPACITY
Rational Flow (cfs) =	0.00	0.00	(cfs)	(cfs)
Known Flow (cfs) =	2.19	2.19	2.19	4.02

Note: Upstream surcharge (ft) = 0.71

STORM SEWER INLET REPORT

FLOW RESULTS (cfs)
Flow from Catchment = 0.00
Carryover from previous inlet = 0.00
Total flow to current inlet = 0.00
Intercepted by current inlet = 0.00
Bypassed by current inlet = 0.00

PONDING WIDTH (ft) = 0.00
DEPTH AT CURB (ft) = 0.00
EFFICIENCY (%)
Curb = *
Grate = * Total = -inf
Slot = *

INPUT PARAMETERS:
Inlet Type = NONE IN SAG
Gutter Width (ft) = 0.000
Inlet n-value = 0.016
Downstream Inlet number = 8
Longitudinal Slope (ft/ft) = 0.000
Pavement Cross Slope (ft/ft) = 0.000
Normal Gutter XSlope (ft/ft) = 0.000
Gutter depression (in) = 0.00

CATCH BASIN 133 TO PIPE 158 DISCHARGE

STORM SEWER SUMMARY REPORT
MAIN SD7 10YR STM/ 0 TW
FILE: D7E10.STM

RAINFALL FILE: PHX1.RND 10 YEAR DESIGN STORM I = 50.790/ (Tc + 9.250) ^ 0.830

LINE ID		FLOW RATE INFO						PIPE INFO					HYDRAULIC INFO		
LINE#	DESCRIPTION DOWNLINE#	INC AR TOT AR (ac)	RUNOFFC WEIGHTD C	INLTIME Tc (min)	INLT I TOTL I (in/h)	INC CIA TOT CIA (cfs)	INPUTQ TOTALQ (cfs)	UNIFORM FLOWCAP (cfs)	SIZE/ TYPE (in)	INVERT UP/DOWN (ft)	PIPE LEN (ft)	NVAL INVSLOP (ft/ft)	HGLSLOPE JLC (ft/ft)	HYD GRD UP/DOWN (ft)	VEL UP/DOWN (ft/s)
1	Pipe #158P1	0.0	0.00	0.00	8.01	0.00	0.61		24D	1136.49	39	0.024	0.309	1136.67	8.54
	DNLN = 0	0.0	-nan	0.08	7.96	0.00	1.22	69.9	24D	1124.43		0.325	1.00	1124.61	8.54
2	Pipe 158P2	0.0	0.00	0.00	8.01	0.00	0.61		24D	1136.54	9	0.024	0.014	1136.90	1.61
	DNLN = 1	0.0	-nan	0.00	8.01	0.00	0.61	9.1	24D	1136.49		0.006	0.00	1136.77	2.32

MAIN SD7 10YR STM/ 0 TW

Data File : D7E10.STM Return Period: 10 Yrs
Rainfall file: PHX1.RND I = 50.790/ (Tc + 9.250) ^ 0.830

LINE 1 STORM SEWER HYDRAULIC REPORT

Diameter (in) = 24 N = 0.024 Critical Depth (in) = 4.69
Length (ft) = 39 Kj (JLC) = 1.0 Downstream Line # = OUTFALL

	INVERT (ft)	DEPTH (in)	HGL (ft)	EGL (ft)	CROWN (ft)	NAT GND (ft)	AREA (ft^2)	VEL (ft/s)
UPSTREAM	1136.49	2.19	1136.67	1137.81	1138.49	1142.04	0.14	8.54
DNSTREAM	1124.43	2.19	1124.61	1125.75	1126.43	1127.00	0.14	8.54
SLOPE(%)	32.517		30.923	30.923		38.564		

		CATCHMENT	CUMULATIVE		
Area (ac)	=	0.0	0.0		
Drainage Time (min)	=	0.00	0.08		
Intensity (in/h)	=	0.00	7.96	TOTAL	UNIFORM
Runoff Coefficient	=	0.00	0.00	FLOW	CAPACITY
Rational Flow (cfs)	=	0.00	0.00	(cfs)	(cfs)
Known Flow (cfs)	=	0.61	1.22	1.22	69.86

Note: Supercritical flow detected - Normal depth assumed

STORM SEWER INLET REPORT

FLOW RESULTS (cfs)
Flow from Catchment = 0.00
Carryover from previous inlet = 0.00
Total flow to current inlet = 0.00
Intercepted by current inlet = 0.00
Bypassed by current inlet = 0.00

PONDING WIDTH (ft) = 0.00
DEPTH AT CURB (ft) = 0.00
EFFICIENCY (%)
Curb = *
Grate = * Total = -inf
Slot = *

INPUT PARAMETERS:
Inlet Type = NONE IN SAG
Gutter Width (ft) = 0.000
Inlet n-value = 0.016
Downstream Inlet number = 9
Longitudinal Slope (ft/ft) = 0.000
Pavement Cross Slope (ft/ft) = 0.000
Normal Gutter XSlope (ft/ft) = 0.000
Gutter depression (in) = 0.00

E-225

MAIN SD7 10YR STM/ 0 TW

Data File : D7E10.STM Return Period: 10 Yrs

Rainfall file: PHX1.RND I = 50.790/ (Tc + 9.250) ^ 0.830

LINE 2 STORM SEWER HYDRAULIC REPORT

Diameter (in) = 24 N = 0.024 Critical Depth (in) = 3.32

Length (ft) = 9 Kj (JLC) = 0.0 Downstream Line # = 1

	INVERT (ft)	DEPTH (in)	HGL (ft)	EGL (ft)	CROWN (ft)	NAT GND (ft)	AREA (ft^2)	VEL (ft/s)
UPSTREAM	1136.54	4.28	1136.90	1136.94	1138.54	1142.21	0.38	1.61
DNSTREAM	1136.49	3.32	1136.77	1136.85	1138.49	1142.04	0.26	2.32
SLOPE(%)	0.556		1.447	0.961		1.888		

		CATCHMENT	CUMULATIVE		
Area (ac)	=	0.0	0.0		
Drainage Time (min)	=	0.00	0.00		
Intensity (in/h)	=	0.00	8.01	TOTAL	UNIFORM
Runoff Coefficient	=	0.00	0.00	FLOW	CAPACITY
Rational Flow (cfs)	=	0.00	0.00	(cfs)	(cfs)
Known Flow (cfs)	=	0.61	0.61	0.61	9.14

STORM SEWER INLET REPORT

FLOW RESULTS (cfs)

Flow from Catchment	=	0.00	PONDING WIDTH (ft)	=	0.00
Carryover from previous inlet	=	0.00	DEPTH AT CURB (ft)	=	0.00
Total flow to current inlet	=	0.00	EFFICIENCY (%)		
Intercepted by current inlet	=	0.00	Curb = *		
Bypassed by current inlet	=	0.00	Grate = *	Total =	-inf
			Slot = *		

INPUT PARAMETERS:

Inlet Type	= NONE IN SAG	Longitudinal Slope (ft/ft)	= 0.000
Gutter Width (ft)	= 0.000	Pavement Cross Slope (ft/ft)	= 0.000
Inlet n-value	= 0.016	Normal Gutter XSlope (ft/ft)	= 0.000
Downstream Inlet number	= 10	Gutter depression (in)	= 0.00

E-226

CATCH BASIN 135 TO PIPE 160 DISCHARGE TO EXST CB

STORM SEWER SUMMARY REPORT
MAIN SD8 10YR STM/ 0 TW
FILE: D8E10.STM

RAINFALL FILE: PHX1.RND 10 YEAR DESIGN STORM I = 50.790/ (Tc + 9.250) ^ 0.830

LINE ID		FLOW RATE INFO						PIPE INFO					HYDRAULIC INFO		
LINE#	DESCRIPTION DOWNLINE#	INC AR TOT AR (ac)	RUNOFFC WEIGHTD C	INLTIME Tc (min)	INLT I TOTL I (in/h)	INC CIA TOT CIA (cfs)	INPUTQ TOTALQ (cfs)	UNIFORM FLOWCAP (cfs)	SIZE/ TYPE (in)	INVERT UP/DOWN (ft)	PIPE LEN (ft)	NVAL INVSLOP (ft/ft)	HGLSLOPE JLC (ft/ft)	HYD GRD UP/DOWN (ft)	VEL UP/DOWN (ft/s)
1	EXST DS 160	0.0	0.00	0.00	8.01	0.00	2.74		24D	1113.50	125	0.012	0.055	1113.80	9.40
	DNLN = 0	0.0	-nan	0.78	7.49	0.00	2.74	57.3	24D	1106.67		0.055	0.12	1106.97	9.40
2	Pipe #160	0.0	0.00	0.00	8.01	0.00	2.74		24D	1117.87	50	0.012	0.085	1118.14	10.96
	DNLN = 1	0.0	-nan	0.70	7.54	0.00	2.74	71.7	24D	1113.60		0.086	0.15	1113.87	10.96
3	Pipe #159	0.0	0.00	0.00	8.01	0.00	1.72		24D	1119.87	190	0.012	0.010	1120.25	4.50
	DNLN = 2	0.0	-nan	0.00	8.01	0.00	1.72	24.5	24D	1117.97		0.010	0.06	1118.33	4.50

MAIN SD8 10YR STM/ 0 TW

Data File : D8E10.STM Return Period: 10 Yrs

Rainfall file: PHX1.RND I = 50.790/ (Tc + 9.250) ^ 0.830

LINE 1 STORM SEWER HYDRAULIC REPORT

Diameter (in) = 24 N = 0.012 Critical Depth (in) = 7.03

Length (ft) = 125 Kj (JLC) = 0.1 Downstream Line # = OUTFALL

	INVERT (ft)	DEPTH (in)	HGL (ft)	EGL (ft)	CROWN (ft)	NAT GND (ft)	AREA (ft^2)	VEL (ft/s)
UPSTREAM	1113.50	3.57	1113.80	1115.17	1115.50	1129.26	0.29	9.40
DNSTREAM	1106.67	3.57	1106.97	1108.34	1108.67	1119.50	0.29	9.40
SLOPE(%)	5.472		5.464	5.464		7.808		

		CATCHMENT	CUMULATIVE		
Area (ac)	=	0.0	0.0		
Drainage Time (min)	=	0.00	0.78		
Intensity (in/h)	=	0.00	7.49	TOTAL	UNIFORM
Runoff Coefficient	=	0.00	0.00	FLOW	CAPACITY
Rational Flow (cfs)	=	0.00	0.00	(cfs)	(cfs)
Known Flow (cfs)	=	2.74	2.74	2.74	57.32

Note: Supercritical flow detected - Normal depth assumed

STORM SEWER INLET REPORT

FLOW RESULTS (cfs)

Flow from Catchment	=	0.00	PONDING WIDTH (ft)	=	0.00
Carryover from previous inlet	=	0.00	DEPTH AT CURB (ft)	=	0.00
Total flow to current inlet	=	0.00	EFFICIENCY (%)		
Intercepted by current inlet	=	0.00	Curb = *		
Bypassed by current inlet	=	0.00	Grate = *	Total =	-inf
			Slot = *		

INPUT PARAMETERS:

Inlet Type	= NONE IN SAG		Longitudinal Slope (ft/ft)	=	0.000
Gutter Width (ft)	=	0.000	Pavement Cross Slope (ft/ft)	=	0.000
Inlet n-value	=	0.016	Normal Gutter XSlope (ft/ft)	=	0.000
Downstream Inlet number	=	0	Gutter depression (in)	=	0.00

E-228

MAIN SD8 10YR STM/ 0 TW

Data File : D8E10.STM Return Period: 10 Yrs
Rainfall file: PHX1.RND I = 50.790/ (Tc + 9.250) ^ 0.830

LINE 2 STORM SEWER HYDRAULIC REPORT

Diameter (in) = 24 N = 0.012 Critical Depth (in) = 7.03
Length (ft) = 50 Kj (JLC) = 0.2 Downstream Line # = 1

	INVERT (ft)	DEPTH (in)	HGL (ft)	EGL (ft)	CROWN (ft)	NAT GND (ft)	AREA (ft^2)	VEL (ft/s)
UPSTREAM	1117.87	3.21	1118.14	1120.00	1119.87	1127.43	0.25	10.96
DNSTREAM	1113.60	3.21	1113.87	1115.73	1115.60	1129.26	0.25	10.96
SLOPE(%)	8.571		8.540	8.540		-3.660		

		CATCHMENT	CUMULATIVE		
Area (ac)	=	0.0	0.0		
Drainage Time (min)	=	0.00	0.70		
Intensity (in/h)	=	0.00	7.54	TOTAL	UNIFORM
Runoff Coefficient	=	0.00	0.00	FLOW	CAPACITY
Rational Flow (cfs)	=	0.00	0.00	(cfs)	(cfs)
Known Flow (cfs)	=	2.74	2.74	2.74	71.74

Note: Supercritical flow detected - Normal depth assumed

STORM SEWER INLET REPORT

FLOW RESULTS (cfs)
Flow from Catchment = 0.00
Carryover from previous inlet = 0.00
Total flow to current inlet = 0.00
Intercepted by current inlet = 0.00
Bypassed by current inlet = 0.00

PONDING WIDTH (ft) = 0.00
DEPTH AT CURB (ft) = 0.00
EFFICIENCY (%)
Curb = *
Grate = * Total = -inf
Slot = *

INPUT PARAMETERS:
Inlet Type = NONE IN SAG
Gutter Width (ft) = 0.000
Inlet n-value = 0.016
Downstream Inlet number = 1
Longitudinal Slope (ft/ft) = 0.000
Pavement Cross Slope (ft/ft) = 0.000
Normal Gutter XSlope (ft/ft) = 0.000
Gutter depression (in) = 0.00

MAIN SD8 10YR STM/ 0 TW

Data File : D8E10.STM Return Period: 10 Yrs

Rainfall file: PHX1.RND I = 50.790/ (Tc + 9.250) ^ 0.830

LINE 3 STORM SEWER HYDRAULIC REPORT

Diameter (in) = 24 N = 0.012 Critical Depth (in) = 5.57

Length (ft) = 190 Kj (JLC) = 0.1 Downstream Line # = 2

	INVERT (ft)	DEPTH (in)	HGL (ft)	EGL (ft)	CROWN (ft)	NAT GND (ft)	AREA (ft^2)	VEL (ft/s)
UPSTREAM	1119.87	4.30	1120.25	1120.56	1121.87	1125.37	0.38	4.50
DNSTREAM	1117.97	4.30	1118.33	1118.64	1119.97	1127.43	0.38	4.50
SLOPE(%)	1.000		1.010	1.010		-1.084		

	CATCHMENT	CUMULATIVE	TOTAL FLOW (cfs)	UNIFORM CAPACITY (cfs)
Area (ac) =	0.0	0.0		
Drainage Time (min) =	0.00	0.00		
Intensity (in/h) =	0.00	8.01		
Runoff Coefficient =	0.00	0.00		
Rational Flow (cfs) =	0.00	0.00		
Known Flow (cfs) =	1.72	1.72	1.72	24.50

Note: Supercritical flow detected - Normal depth assumed

STORM SEWER INLET REPORT

FLOW RESULTS (cfs)

Flow from Catchment = 0.00

Carryover from previous inlet = 0.00

Total flow to current inlet = 0.00

Intercepted by current inlet = 0.00

Bypassed by current inlet = 0.00

PONDING WIDTH (ft) = 0.00

DEPTH AT CURB (ft) = 0.00

EFFICIENCY (%)

Curb = *

Grate = * Total = -inf

Slot = *

INPUT PARAMETERS:

Inlet Type = NONE IN SAG

Gutter Width (ft) = 0.000

Inlet n-value = 0.016

Downstream Inlet number = 2

Longitudinal Slope (ft/ft) = 0.000

Pavement Cross Slope (ft/ft) = 0.000

Normal Gutter XSlope (ft/ft) = 0.000

Gutter depression (in) = 0.00

Catch Basin 138 & 139 To Exist. CB.

STORM SEWER SUMMARY REPORT
MAIN SD9 10YR STM/100YR TW
FILE: D9E10.STM

RAINFALL FILE: PHX1.RND 10 YEAR DESIGN STORM I = 50.790/ (Tc + 9.250) ^ 0.830

LINE ID		FLOW RATE INFO						PIPE INFO					HYDRAULIC INFO			
LINE#	DESCRIPTION DOWNLINE#	INC AR TOT AR (ac)	RUNOFFC WEIGHTD C	INLTIME Tc (min)	INLT I TOTL I (in/h)	INC CIA TOT CIA (cfs)	INPUTQ TOTALQ (cfs)	UNIFORM FLOWCAP (cfs)	SIZE/ TYPE (in)	INVERT UP/DOWN (ft)	PIPE LEN (ft)	NVAL INVSLOP (ft/ft)	HGLSLOPE JLC (ft/ft)	HYD GRD UP/DOWN (ft)	VEL UP/DOWN (ft/s)
1	exst ds 162	0.0	0.00	0.00	8.01	0.00	5.46		24D	1113.38	45	0.013	0.011	1114.21	4.45
	DNLN = 0	0.0	-nan	1.26	7.21	0.00	5.46	70.7	24D	1109.00		0.098	1.00	1113.73	1.74
2	exst ds 161	0.0	0.00	0.00	8.01	0.00	3.83		24D	1113.60	95	0.012	0.001	1114.48	2.88
	DNLN = 1	0.0	-nan	0.66	7.57	0.00	3.83	11.2	24D	1113.40		0.002	0.60	1114.39	2.46
3	Pipe #161	0.0	0.00	0.00	8.01	0.00	1.14		24D	1114.85	106	0.012	0.007	1115.25	2.76
	DNLN = 2	0.0	-nan	0.00	8.01	0.00	1.14	20.6	24D	1114.10		0.007	0.16	1114.50	2.56
4	Pipe #162	0.0	0.00	0.00	8.01	0.00	1.63		24D	1115.37	34	0.012	0.041	1116.01	3.06
	DNLN = 1	0.0	-nan	0.00	8.01	0.00	1.63	57.8	24D	1113.48		0.056	1.30	1114.61	0.89

Pipe Discharges to Retention Basin 1
100-year water elevation = 1113.73
Per "Final Drainage Report, Segment 8B", July 1990.

MAIN SD9 10YR STM/100YR TW

Data File : D9E10.STM Return Period: 10 Yrs

Rainfall file: PHX1.RND I = 50.790/ (Tc + 9.250) ^ 0.830

LINE 1 STORM SEWER HYDRAULIC REPORT

Diameter (in) = 24 N = 0.013 Critical Depth (in) = 9.93

Length (ft) = 45 Kj (JLC) = 1.0 Downstream Line # = OUTFALL

	INVERT (ft)	DEPTH (in)	HGL (ft)	EGL (ft)	CROWN (ft)	NAT GND (ft)	AREA (ft²)	VEL (ft/s)
UPSTREAM	1113.38	9.93	1114.21	1114.51	1115.38	1116.00	1.23	4.45
DNSTREAM	1109.00	24.00	1113.73	1113.78	1111.00	1116.00	3.14	1.74
SLOPE(%)	9.780		1.061	1.640		0.000		

		CATCHMENT	CUMULATIVE		
Area (ac)	=	0.0	0.0		
Drainage Time (min)	=	0.00	1.26		
Intensity (in/h)	=	0.00	7.21	TOTAL	UNIFORM
Runoff Coefficient	=	0.00	0.00	FLOW	CAPACITY
Rational Flow (cfs)	=	0.00	0.00	(cfs)	(cfs)
Known Flow (cfs)	=	5.46	5.46	5.46	70.73

Note: Transitional flow exists in this line

STORM SEWER INLET REPORT

FLOW RESULTS (cfs)

Flow from Catchment	=	0.00
Carryover from previous inlet	=	0.00
Total flow to current inlet	=	0.00
Intercepted by current inlet	=	0.00
Bypassed by current inlet	=	0.00

PONDING WIDTH (ft) = 0.00

DEPTH AT CURB (ft) = 0.00

EFFICIENCY (%)

Curb = *

Grate = * Total = -inf

Slot = *

INPUT PARAMETERS:

Inlet Type	= NONE IN SAG	Longitudinal Slope (ft/ft)	= 0.000
Gutter Width (ft)	= 0.000	Pavement Cross Slope (ft/ft)	= 0.000
Inlet n-value	= 0.016	Normal Gutter XSlope (ft/ft)	= 0.000
Downstream Inlet number	= 0	Gutter depression (in)	= 0.00

E-232

MAIN SD9 10YR STM/100YR TW

Data File : D9E10.STM Return Period: 10 Yrs

Rainfall file: PHX1.RND I = 50.790/ (Tc + 9.250) ^ 0.830

LINE 2 STORM SEWER HYDRAULIC REPORT

Diameter (in) = 24 N = 0.012 Critical Depth (in) = 8.32

Length (ft) = 95 Kj (JLC) = 0.6 Downstream Line # = 1

	INVERT (ft)	DEPTH (in)	HGL (ft)	EGL (ft)	CROWN (ft)	NAT GND (ft)	AREA (ft^2)	VEL (ft/s)
UPSTREAM	1113.60	10.54	1114.48	1114.61	1115.60	1120.26	1.33	2.88
DNSTREAM	1113.40	11.90	1114.39	1114.49	1115.40	1116.00	1.55	2.46
SLOPE(%)	0.210		0.091	0.128	.	4.484		

		CATCHMENT	CUMULATIVE		
Area (ac)	=	0.0	0.0		
Drainage Time (min)	=	0.00	0.66		
Intensity (in/h)	=	0.00	7.57	TOTAL	UNIFORM
Runoff Coefficient	=	0.00	0.00	FLOW	CAPACITY
Rational Flow (cfs)	=	0.00	0.00	(cfs)	(cfs)
Known Flow (cfs)	=	3.83	3.83	3.83	11.24

STORM SEWER INLET REPORT

FLOW RESULTS (cfs)

Flow from Catchment	=	0.00	PONDING WIDTH (ft)	= 0.00
Carryover from previous inlet	=	0.00	DEPTH AT CURB (ft)	= 0.00
Total flow to current inlet	=	0.00	EFFICIENCY (%)	
Intercepted by current inlet	=	0.00	Curb = *	
Bypassed by current inlet	=	0.00	Grate = *	Total = -inf
			Slot = *	

INPUT PARAMETERS:

Inlet Type	= NONE IN SAG	Longitudinal Slope (ft/ft)	= 0.000
Gutter Width (ft)	= 0.000	Pavement Cross Slope (ft/ft)	= 0.000
Inlet n-value	= 0.016	Normal Gutter XSlope (ft/ft)	= 0.000
Downstream Inlet number	= 1	Gutter depression (in)	= 0.00

MAIN SD9 10YR STM/100YR TW

Data File : D9E10.STM Return Period: 10 Yrs
Rainfall file: PHX1.RND I = 50.790/ (Tc + 9.250) ^ 0.830

LINE 3 STORM SEWER HYDRAULIC REPORT

Diameter (in) = 24 N = 0.012 Critical Depth (in) = 4.54
Length (ft) = 106 Kj (JLC) = 0.2 Downstream Line # = 2

	INVERT (ft)	DEPTH (in)	HGL (ft)	EGL (ft)	CROWN (ft)	NAT GND (ft)	AREA (ft^2)	VEL (ft/s)
UPSTREAM	1114.85	4.54	1115.25	1115.37	1116.85	1120.35	0.41	2.76
DNSTREAM	1114.10	4.79	1114.50	1114.60	1116.10	1120.26	0.45	2.56
SLOPE(%)	0.708		0.706	0.722		0.085		

		CATCHMENT	CUMULATIVE		
Area (ac)	=	0.0	0.0		
Drainage Time (min)	=	0.00	0.00		
Intensity (in/h)	=	0.00	8.01	TOTAL	UNIFORM
Runoff Coefficient	=	0.00	0.00	FLOW	CAPACITY
Rational Flow (cfs)	=	0.00	0.00	(cfs)	(cfs)
Known Flow (cfs)	=	1.14	1.14	1.14	20.61

STORM SEWER INLET REPORT

FLOW RESULTS (cfs)
Flow from Catchment = 0.00
Carryover from previous inlet = 0.00
Total flow to current inlet = 0.00
Intercepted by current inlet = 0.00
Bypassed by current inlet = 0.00

PONDING WIDTH (ft) = 0.00
DEPTH AT CURB (ft) = 0.00
EFFICIENCY (%)
Curb = *
Grate = * Total = -inf
Slot = *

INPUT PARAMETERS:
Inlet Type = NONE IN SAG
Gutter Width (ft) = 0.000
Inlet n-value = 0.016
Downstream Inlet number = 2

Longitudinal Slope (ft/ft) = 0.000
Pavement Cross Slope (ft/ft) = 0.000
Normal Gutter XSlope (ft/ft) = 0.000
Gutter depression (in) = 0.00

MAIN SD9 10YR STM/100YR TW

Data File : D9E10.STM Return Period: 10 Yrs
Rainfall file: PHX1.RND I = 50.790/ (Tc + 9.250) ^ 0.830

LINE 4 STORM SEWER HYDRAULIC REPORT

Diameter (in) = 24 N = 0.012 Critical Depth (in) = 5.42
Length (ft) = 34 Kj (JLC) = 1.3 Downstream Line # = 1

	INVERT (ft)	DEPTH (in)	HGL (ft)	EGL (ft)	CROWN (ft)	NAT GND (ft)	AREA (ft^2)	VEL (ft/s)
UPSTREAM	1115.37	5.42	1116.01	1116.16	1117.37	1120.87	0.53	3.06
DNSTREAM	1113.48	13.52	1114.61	1114.62	1115.48	1116.00	1.82	0.89
SLOPE(%)	5.567		4.130	4.521		14.324		

		CATCHMENT	CUMULATIVE		
Area (ac)	=	0.0	0.0		
Drainage Time (min)	=	0.00	0.00		
Intensity (in/h)	=	0.00	8.01	TOTAL	UNIFORM
Runoff Coefficient	=	0.00	0.00	FLOW	CAPACITY
Rational Flow (cfs)	=	0.00	0.00	(cfs)	(cfs)
Known Flow (cfs)	=	1.63	1.63	1.63	57.82

STORM SEWER INLET REPORT

FLOW RESULTS (cfs)
Flow from Catchment = 0.00
Carryover from previous inlet = 0.00
Total flow to current inlet = 0.00
Intercepted by current inlet = 0.00
Bypassed by current inlet = 0.00

PONDING WIDTH (ft) = 0.00
DEPTH AT CURB (ft) = 0.00
EFFICIENCY (%)
Curb = *
Grate = * Total = -inf
Slot = *

INPUT PARAMETERS:
Inlet Type = NONE IN SAG
Gutter Width (ft) = 0.000
Inlet n-value = 0.016
Downstream Inlet number = 3
Longitudinal Slope (ft/ft) = 0.000
Pavement Cross Slope (ft/ft) = 0.000
Normal Gutter XSlope (ft/ft) = 0.000
Gutter depression (in) = 0.00

E-235

Catch Basin 140 to Retention Basin 1

STORM SEWER SUMMARY REPORT
MAIN SD10 10YR STM/100YR TW
FILE: D10E10.STM

RAINFALL FILE: PHX1.RND 10 YEAR DESIGN STORM I = 50.790/ (Tc + 9.250) ^ 0.830

LINE ID		FLOW RATE INFO						PIPE INFO					HYDRAULIC INFO		
LINE#	DESCRIPTION DOWNLINE#	INC AR TOT AR (ac)	RUNOFFC WEIGHTD C	INLTIME Tc (min)	INLT I TOTL I (in/h)	INC CIA TOT CIA (cfs)	INPUTQ TOTALQ (cfs)	UNIFORM FLOWCAP (cfs)	SIZE/ TYPE (in)	INVERT UP/DOWN (ft)	PIPE LEN (ft)	NVAL INVSLOP (ft/ft)	HGLSLOPE JLC (ft/ft)	HYD GRD UP/DOWN (ft)	VEL UP/DOWN (ft/s)
1	Pipe #163P1	0.0	0.00	0.00	8.01	0.00	1.27		24D	1126.68	53	0.024	0.252	1127.08	2.85
	DNLN = 0	0.0	-nan	0.06	7.97	0.00	1.27	70.5	24D	1110.00		0.332	1.00	1113.73	0.40
2	Pipe #163P2	0.0	0.00	0.00	8.01	0.00	1.27		24D	1126.73	9	0.024	0.016	1127.22	2.13
	DNLN = 1	0.0	-nan	0.00	8.01	0.00	1.27	9.1	24D	1126.68		0.006	0.00	1127.08	2.85

Pipe discharges to retention basin 1.
100-year water elevation = 1113.73
per "Final Drainage Report, Segment 8B," July 1990

MAIN SD10 10YR STM/100YR TW

Data File : D10E10.STM Return Period: 10 Yrs

Rainfall file: PHX1.RND I = 50.790/ (Tc + 9.250) ^ 0.830

LINE 1 STORM SEWER HYDRAULIC REPORT

Diameter (in) = 24 N = 0.024 Critical Depth (in) = 4.79

Length (ft) = 53 Kj (JLC) = 1.0 Downstream Line # = OUTFALL

	INVERT (ft)	DEPTH (in)	HGL (ft)	EGL (ft)	CROWN (ft)	NAT GND (ft)	AREA (ft²)	VEL (ft/s)
UPSTREAM	1126.68	4.79	1127.08	1127.21	1128.68	1112.50	0.45	2.85
DNSTREAM	1110.00	24.00	1113.73	1113.73	1112.00	1112.50	3.14	0.40
SLOPE(%)	33.157		25.187	25.420		0.000		

	CATCHMENT	CUMULATIVE		
Area (ac) =	0.0	0.0		
Drainage Time (min) =	0.00	0.06		
Intensity (in/h) =	0.00	7.97	TOTAL	UNIFORM
Runoff Coefficient =	0.00	0.00	FLOW	CAPACITY
Rational Flow (cfs) =	0.00	0.00	(cfs)	(cfs)
Known Flow (cfs) =	1.27	1.27	1.27	70.55

Note: Transitional flow exists in this line

STORM SEWER INLET REPORT

FLOW RESULTS (cfs)

Flow from Catchment = 0.00

Carryover from previous inlet = 0.00

Total flow to current inlet = 0.00

Intercepted by current inlet = 0.00

Bypassed by current inlet = 0.00

PONDING WIDTH (ft) = 0.00

DEPTH AT CURB (ft) = 0.00

EFFICIENCY (%)

Curb = *

Grate = * Total = -inf

Slot = *

INPUT PARAMETERS:

Inlet Type = NONE IN SAG

Gutter Width (ft) = 0.000

Inlet n-value = 0.016

Downstream Inlet number = 0

Longitudinal Slope (ft/ft) = 0.000

Pavement Cross Slope (ft/ft) = 0.000

Normal Gutter XSlope (ft/ft) = 0.000

Gutter depression (in) = 0.00

MAIN SD10 10YR STM/100YR TW

Data File : D10E10.STM Return Period: 10 Yrs

Rainfall file: PHX1.RND I = 50.790/ (Tc + 9.250) ^ 0.830

LINE 2 STORM SEWER HYDRAULIC REPORT

Diameter (in) = 24 N = 0.024 Critical Depth (in) = 4.79

Length (ft) = 9 Kj (JLC) = 0.0 Downstream Line # = 1

	INVERT (ft)	DEPTH (in)	HGL (ft)	EGL (ft)	CROWN (ft)	NAT GND (ft)	AREA (ft^2)	VEL (ft/s)
UPSTREAM	1126.73	5.88	1127.22	1127.29	1128.73	1132.27	0.60	2.13
DNSTREAM	1126.68	4.79	1127.08	1127.21	1128.68	1112.50	0.45	2.85
SLOPE(%)	0.555		1.569	0.948		219.667		

		CATCHMENT	CUMULATIVE	TOTAL FLOW (cfs)	UNIFORM CAPACITY (cfs)
Area (ac)	=	0.0	0.0		
Drainage Time (min)	=	0.00	0.00		
Intensity (in/h)	=	0.00	8.01		
Runoff Coefficient	=	0.00	0.00		
Rational Flow (cfs)	=	0.00	0.00		
Known Flow (cfs)	=	1.27	1.27	1.27	9.12

STORM SEWER INLET REPORT

FLOW RESULTS (cfs)

Flow from Catchment	=	0.00
Carryover from previous inlet	=	0.00
Total flow to current inlet	=	0.00
Intercepted by current inlet	=	0.00
Bypassed by current inlet	=	0.00

PONDING WIDTH (ft) = 0.00

DEPTH AT CURB (ft) = 0.00

EFFICIENCY (%)

Curb = *

Grate = * Total = -inf

Slot = *

INPUT PARAMETERS:

Inlet Type	=	NONE IN SAG	Longitudinal Slope (ft/ft)	=	0.000
Gutter Width (ft)	=	0.000	Pavement Cross Slope (ft/ft)	=	0.000
Inlet n-value	=	0.016	Normal Gutter XSlope (ft/ft)	=	0.000
Downstream Inlet number	=	1	Gutter depression (in)	=	0.00

E-238

Retention Basin 2 to Pipe 168 Discharge

STORM SEWER SUMMARY REPORT
MAIN SD11 10YR STM/100YR TW
FILE: D11E10.STM

RAINFALL FILE: PHX1.RND 10 YEAR DESIGN STORM I = 50.790/ (Tc + 9.250) ^ 0.830

LINE ID		FLOW RATE INFO						PIPE INFO					HYDRAULIC INFO		
LINE#	DESCRIPTION DOWNLINE#	INC AR TOT AR (ac)	RUNOFFC WEIGHTD C	INLTIME Tc (min)	INLT I TOTL I (in/h)	INC CIA TOT CIA (cfs)	INPUTQ TOTALQ (cfs)	UNIFORM FLOWCAP (cfs)	SIZE/ TYPE (in)	INVERT UP/DOWN (ft)	PIPE LEN (ft)	NVAL INVSLOP (ft/ft)	HGLSLOPE JLC (ft/ft)	HYD GRD UP/DOWN (ft)	VEL UP/DOWN (ft/s)
1	EXST DS 168	0.0	0.00	0.00	8.01	0.00	5.70		24D	1109.01	113	0.012	0.001	1113.79	1.81
	DNLN = 0	0.0	-nan	1.51	7.07	0.00	5.70	2.3	24D	1109.00		0.000	1.00	1113.73	1.81
2	Pipe #168	0.0	0.00	0.00	8.01	0.00	5.70		24D	1109.02	24	0.012	0.001	1113.81	1.81
	DNLN = 1	0.0	-nan	1.29	7.19	0.00	5.70	5.0	24D	1109.01		0.000	0.07	1113.79	1.81
3	Pipe #167	0.0	0.00	0.00	8.01	0.00	5.70		24D	1109.03	140	0.012	0.001	1113.95	1.81
	DNLN = 2	0.0	-nan	0.00	8.01	0.00	5.70	2.1	24D	1109.02		0.000	0.70	1113.84	1.81

Pipe Equalizes Flows between Retention Basin's 1 and 2.

- Assumed all flow entering basin no. 2 would flow to basin no. 1. [Since this is an equalizer pipe, the actual flow will be substantially less than 5.70 cfs.]
- This run indicates a water surface Elevation difference between basins of 0.11' (1113.84 - 1113.73).

MAIN SD11 10YR STM/100YR TW

Data File : D11E10.STM Return Period: 10 Yrs

Rainfall file: PHX1.RND I = 50.790/ (Tc + 9.250) ^ 0.830

LINE 1 STORM SEWER HYDRAULIC REPORT

Diameter (in) = 24 N = 0.012 Critical Depth (in) = 10.14

Length (ft) = 113 Kj (JLC) = 1.0 Downstream Line # = OUTFALL

	INVERT (ft)	DEPTH (in)	HGL (ft)	EGL (ft)	CROWN (ft)	NAT GND (ft)	AREA (ft^2)	VEL (ft/s)
UPSTREAM	1109.01	24.00	1113.79	1113.84	1111.01	1111.50	3.14	1.81
DNSTREAM	1109.00	24.00	1113.73	1113.78	1111.00	1111.50	3.14	1.81
SLOPE(%)	0.009		0.054	0.054		0.000		

		CATCHMENT	CUMULATIVE		
Area (ac)	=	0.0	0.0		
Drainage Time (min)	=	0.00	1.51		
Intensity (in/h)	=	0.00	7.07	TOTAL	UNIFORM
Runoff Coefficient	=	0.00	0.00	FLOW	CAPACITY
Rational Flow (cfs)	=	0.00	0.00	(cfs)	(cfs)
Known Flow (cfs)	=	5.70	5.70	5.70	2.31

Note: Upstream surcharge (ft) = 2.78

STORM SEWER INLET REPORT

FLOW RESULTS (cfs)

Flow from Catchment	=	0.00	PONDING WIDTH (ft)	=	0.00
Carryover from previous inlet	=	0.00	DEPTH AT CURB (ft)	=	0.00
Total flow to current inlet	=	0.00	EFFICIENCY (%)		
Intercepted by current inlet	=	0.00	Curb = *		
Bypassed by current inlet	=	0.00	Grate = *	Total =	-inf
			Slot = *		

INPUT PARAMETERS:

Inlet Type	= NONE IN SAG		Longitudinal Slope (ft/ft)	=	0.000
Gutter Width (ft)	=	0.000	Pavement Cross Slope (ft/ft)	=	0.000
Inlet n-value	=	0.016	Normal Gutter XSlope (ft/ft)	=	0.000
Downstream Inlet number	=	0	Gutter depression (in)	=	0.00

E-240

MAIN SD11 10YR STM/100YR TW

Data File : D11E10.STM Return Period: 10 Yrs

Rainfall file: PHX1.RND I = 50.790/ (Tc + 9.250) ^ 0.830

LINE 2 STORM SEWER HYDRAULIC REPORT

Diameter (in) = 24 N = 0.012 Critical Depth (in) = 10.14

Length (ft) = 24 Kj (JLC) = 0.1 Downstream Line # = 1

	INVERT (ft)	DEPTH (in)	HGL (ft)	EGL (ft)	CROWN (ft)	NAT GND (ft)	AREA (ft^2)	VEL (ft/s)
UPSTREAM	1109.02	24.00	1113.81	1113.86	1111.02	1115.00	3.14	1.81
DNSTREAM	1109.01	24.00	1113.79	1113.85	1111.01	1111.50	3.14	1.81
SLOPE(%)	0.042		0.054	0.054		14.583		

		CATCHMENT	CUMULATIVE		
Area (ac)	=	0.0	0.0		
Drainage Time (min)	=	0.00	1.29		
Intensity (in/h)	=	0.00	7.19	TOTAL	UNIFORM
Runoff Coefficient	=	0.00	0.00	FLOW	CAPACITY
Rational Flow (cfs)	=	0.00	0.00	(cfs)	(cfs)
Known Flow (cfs)	=	5.70	5.70	5.70	5.00

Note: Upstream surcharge (ft) = 2.79

STORM SEWER INLET REPORT

FLOW RESULTS (cfs)

Flow from Catchment	=	0.00	PONDING WIDTH (ft)	=	0.00
Carryover from previous inlet	=	0.00	DEPTH AT CURB (ft)	=	0.00
Total flow to current inlet	=	0.00	EFFICIENCY (%)		
Intercepted by current inlet	=	0.00	Curb = *		
Bypassed by current inlet	=	0.00	Grate = *	Total =	-inf
			Slot = *		

INPUT PARAMETERS:

Inlet Type	= NONE IN SAG		Longitudinal Slope (ft/ft)	=	0.000
Gutter Width (ft)	=	0.000	Pavement Cross Slope (ft/ft)	=	0.000
Inlet n-value	=	0.016	Normal Gutter XSlope (ft/ft)	=	0.000
Downstream Inlet number	=	1	Gutter depression (in)	=	0.00

E-241

MAIN SD11 10YR STM/100YR TW

Data File : D11E10.STM Return Period: 10 Yrs

Rainfall file: PHX1.RND I = 50.790/ (Tc + 9.250) ^ 0.830

LINE 3 STORM SEWER HYDRAULIC REPORT

Diameter (in) = 24 N = 0.012 Critical Depth (in) = 10.14

Length (ft) = 140 Kj (JLC) = 0.7 Downstream Line # = 2

	INVERT (ft)	DEPTH (in)	HGL (ft)	EGL (ft)	CROWN (ft)	NAT GND (ft)	AREA (ft^2)	VEL (ft/s)
UPSTREAM	1109.03	24.00	1113.95	1114.01	1111.03	1113.00	3.14	1.81
DNSTREAM	1109.02	24.00	1113.84	1113.89	1111.02	1115.00	3.14	1.81
SLOPE(%)	0.007		0.080	0.080		-1.429		

		CATCHMENT	CUMULATIVE		
Area (ac)	=	0.0	0.0		
Drainage Time (min)	=	0.00	0.00		
Intensity (in/h)	=	0.00	8.01	TOTAL	UNIFORM
Runoff Coefficient	=	0.00	0.00	FLOW	CAPACITY
Rational Flow (cfs)	=	0.00	0.00	(cfs)	(cfs)
Known Flow (cfs)	=	5.70	5.70	5.70	2.07

Note: Upstream surcharge (ft) = 2.92

STORM SEWER INLET REPORT

FLOW RESULTS (cfs)

Flow from Catchment	=	0.00	PONDING WIDTH (ft)	=	0.00
Carryover from previous inlet	=	0.00	DEPTH AT CURB (ft)	=	0.00
Total flow to current inlet	=	0.00	EFFICIENCY (%)		
Intercepted by current inlet	=	0.00	Curb = *		
Bypassed by current inlet	=	0.00	Grate = *	Total =	-inf
			Slot = *		

INPUT PARAMETERS:

Inlet Type	= NONE IN SAG		Longitudinal Slope (ft/ft)	=	0.000
Gutter Width (ft)	=	0.000	Pavement Cross Slope (ft/ft)	=	0.000
Inlet n-value	=	0.016	Normal Gutter XSlope (ft/ft)	=	0.000
Downstream Inlet number	=	2	Gutter depression (in)	=	0.00

Appendix F
Storm Sewer Inlet Calculations

ARIZONA DEPARTMENT OF TRANSPORTATION

STORM SEWER INLET CALCULATION RECORD

LOCATION DATA

Highway SR 153

Location Phoenix

Project No.

DESIGN DATA

Frequency 10 years

P_6= 2.03 in. P_{24}= 2.43 in. P_1= 1.55 in.

T_{all} 16'

n 0.016

INLET CALCULATIONS (Future Mainline)

Inlet No	Inlet Station	DA No	Inlet Type	Q cfs	Q_c cfs	Q_T cfs	So %	Gutter S_x	Gutter z/n	Pavement S_x	Pavement z/n	D ft.	T ft.	a in.	Inlet Act.	Inlet Corr.	Q_i/Q	Q_i cfs	Q_c cfs
	62+60 Lt		Slotted Drain	1.84	0	1.84	1.14	.067		.02		.26	7.29	1.41	20	13.39	1	1.84	0
	62+95 Rt		↑	2.53	0	2.53	1.5	.067		.02		.28	8.02	1.41	20	16.98	1	2.53	0
	68+66 Lt			2.57	0	2.57	2.0	.067		.02		.27	7.50	1.41	20	18.34	1	2.57	0
	68+75 Rt			3.92	0	3.92	1.6	.067		.013		.30	12.69	1.62	30	23.49	1	3.92	0
	72+32 Lt		↓	1.67	0	1.67	1.45	.067		.059		.26	3.99	.24	20	12.70	1	1.67	0
	72+32 Rt		Slotted Drain	2.25	0	2.25	1.2	.057		.057		.28	4.90	0.0	20	14.89	1	2.25	0

Computed by: GAG 1/94 Checked by: D. Schous Date: 1/94

20-0405 12/74

ARIZONA DEPARTMENT OF TRANSPORTATION

STORM SEWER INLET CALCULATION RECORD

LOCATION DATA

Highway: SR 153

Location: Phoenix, AZ

Project No.:

DESIGN DATA

Frequency: 10 years

P_6= 2.03 in. P_{24}= 2.43 in. P_1= 1.55 in.

T_{all} 16' (* = 8')

n 0.016

INLET CALCULATIONS (Mainline)

Inlet No	Inlet Station	DA No	Inlet Type	Q cfs	Q_c cfs	Q_T cfs	So %	Gutter S_x	Gutter z/n	Pavement S_x	Pavement z/n	D ft.	T ft.	a in.	Inlet Act.	Inlet Corr.	Q_i/Q	Q_i cfs	Q_c cfs
111	75+09 Rt	111	Slotted Drain	1.59	0	1.59	0.2	.012		.012		.19	15.96	0.0	40		1.0	1.59	0
113	77+05 Rt	113	↑	1.06	0	1.06	0.9	.067		.035		.23	4.39	.96	10	9.19	1.0	1.06	0
115	78+35 Lt	115		6.41	0	6.41	0.0	.058		.058		–	<16'	0.0	20		1.0	6.41	0
116*	84+00 Rt	116		3.55	0	3.55	0.31	.067		.053		.44	7.68	.42	20	11.40	1.0	3.55	0
117	86+45 Lt	117		1.63	0	1.63	.059	.067		.016		.37	14.8	1.52	10	6.02	1.0	1.63	0
118*	89+45 Rt	118		3.15	0	3.15	.155	.021		.021		.32	15.35	0.0	80		1.0	3.15	0
119	89+45 Lt	119		3.06	0	3.06	.848	.067		.02		.32	10.13	1.41	20	16.42	1.0	3.06	0
120	95+00 Rt	120		2.94	.33	3.27	.848	.051		.051		.33	6.45	0.0	20	16.81	1.0	3.27	0
121	95+00 Lt	121		2.74	.33	3.07	.848	.067		.051		.35	6.06	.48	20	14.36	1	3.07	0
122*	117+45 Lt	122		2.94	.27	3.21	0.6	.067		.036		.36	7.84	.93	20	13.73	1	3.21	0
123	117+45 Rt	123		3.68	.27	3.95	1.08	.038		.038		.30	7.96	0.0	30	23.35	1	3.95	0
124	118+78 Rt	124		0.86	0	0.86	0.0	.0045		.0045		–	<16'	0.0	40		1	0.86	0
125*	119+00 Lt	125		1.10	0	1.10	0.5	.067		.02		.26	6.88	1.41	10	8.32	1	1.10	0
126*	119+80 Lt	126	↓	2.37	0	2.37	0.0	.067		.02		–	<16'	1.41	40		1	2.37	0
127	119+95 Rt	127	Slotted Drain	2.37	0	2.37	0.0	.067		.02		–	<16'	1.41	30		1	2.37	0

Computed by: GAG 1/94 Checked by: D. Schaub Date: 1/94

F-2

20-0405 12/74

ARIZONA DEPARTMENT OF TRANSPORTATION

STORM SEWER INLET CALCULATION RECORD

LOCATION DATA

Highway SR 153

Location Phoenix, AZ

Project No.

DESIGN DATA

Frequency 10 years

P_6= 2.03 in. P_{24}= 2.43 in. P_1= 1.55 in.

T_{all} 16' (* = 8')

n 0.016

INLET CALCULATIONS

Inlet No	Inlet Station	DA No	Inlet Type	Q cfs	Q_c cfs	Q_T cfs	So %	Gutter S_x	Gutter z/n	Pavement S_x	Pavement z/n	D ft.	T ft.	a in.	Inlet Act.	Inlet Corr.	Q_i/Q	Q_i cfs	Q_c cfs
128*	123+30 Rt	128	Slotted Drain	2.70	0	2.70	1.9	.067		.02		.27	7.80	1.41	20	18.61	1	2.70	0
129	123+98 Lt	129	↑	1.92	0	1.92	1.6	.0096		.0096		.13	13.33	0.0	50	44.93	1	1.92	0
130	133+30 Rt	130	↓	3.02	0	3.02	3.3	.067		.032		.27	5.60	1.05	30	21.69	1	3.02	0
131	133+30 Lt	131	Slotted Drain	3.19	0	3.19	3.33	.032		.032		.21	6.68	0.0	50		1	3.19	0

Computed by: GAG 1/94 Checked by: D. Schaut Date: 1/94

F-3

20-0405 12/74

ARIZONA DEPARTMENT OF TRANSPORTATION

STORM SEWER INLET CALCULATION RECORD

LOCATION DATA

Highway SR 153

Location Phoenix, AZ

Project No.

DESIGN DATA

Frequency 10 years

P_6= 2.03 in. P_{24}= 2.43 in. P_1= 1.55 in.

T_{all} 8'

n 0.016

INLET CALCULATIONS (Ramp A)

Inlet No	Inlet Station	DA No	Inlet Type	Q cfs	Q_c cfs	Q_T cfs	So %	Gutter S_x	Gutter z/n	Pavement S_x	Pavement z/n	D ft.	T ft.	a in.	Inlet Act.	Inlet Corr.	Q_i/Q	Q_i cfs	Q_c cfs
132	5+00 Rt	132	Slotted Drain	.94	0	.94	0.0	.067		.05		–	<8'	.04	40		1	.94	0
133	9+20 Rt	133	↑	.61	0	.61	1.65	.067		.0137		.17	2.79	1.60	10	8.61	1	.61	0
134	13+50 Lt	134	↓	1.02	0	1.02	2.15	.067		.0128		.19	4.10	1.51	20	11.82	1	1.02	0
135	15+38 Rt	135	Slotted Drain	1.72	0	1.72	0.0	.067		.02		–	<8'	1.41	20		1	1.72	0

Computed by: GAG 1/94 Checked by: D. Schaus Date: 1/94

4-4

20-0405 12/74

ARIZONA DEPARTMENT OF TRANSPORTATION

STORM SEWER INLET CALCULATION RECORD

LOCATION DATA

Highway SR 153

Location Phoenix, AZ

Project No.

DESIGN DATA

Frequency 10 years

P_6= 2.03 in. P_{24}= 2.43 in. P_1= 1.55 in.

T_{all} 8'

n 0.016

INLET CALCULATIONS (Ramps C , C-1)

Inlet No	Inlet Station	DA No	Inlet Type	Q cfs	Q_c cfs	Q_T cfs	So %	Gutter S_x	Gutter z/n	Pavement S_x	Pavement z/n	D ft.	T ft.	a in.	Inlet Act.	Inlet Corr.	Q_i/Q	Q_i cfs	Q_c cfs
107	18+00 Lt	107	Slotted Drain	1.14	0	1.14	.70	.067		.024		.25	5.81	1.29	10	9.10	1	1.14	0
109	21+15 Lt	109	Slotted Drain	2.57	0	2.57	.396	.067		.045		.37	7.03	.66	20	10.86	1	257	0
	Ramp		C-1																
103	10+25 Lt	103	Type 3 1-10' wing	0.78	0	.78	1.4	.083		.008		.20	6.61	1.80	13.58	8.42	1	.78	0

Computed by: GAG 1/94 Checked by: D. Schous Date: 1/94

S-7

20-0405 12/74

ARIZONA DEPARTMENT OF TRANSPORTATION

STORM SEWER INLET CALCULATION RECORD

LOCATION DATA

Highway SR 153

Location Phoenix, AZ

Project No.

DESIGN DATA

Frequency 10 years

P_6= 2.03 in. P_{24}= 2.43 in. P_1= 1.55 in.

T_{all} 8'

n 0.016

INLET CALCULATIONS (Ramps D, D-1)

Inlet No	Inlet Station	DA No	Inlet Type	Q cfs	Q_c cfs	Q_T cfs	So %	Gutter S_x	Gutter z/n	Pavement S_x	Pavement z/n	D ft.	T ft.	a in.	Inlet Act.	Inlet Corr.	Q_i/Q	Q_i cfs	Q_c cfs
105	13+55 Rt	105	Slotted Drain	3.45	0	3.45	0.0	.067		.02		–	<8'	1.41	30		1	3.45	0
106	16+35 Rt	106	↑	1.14	0	1.14	.44	.067		.02		.26	7.27	1.41	10	8.22	1	1.14	0
108	19+80 Lt	108	↕	0.76	0	.76	0.0	.067		.044		–	<8'	0.06	20		1	0.76	0
110	22+22 Lt	110	↓	1.02	0	1.02	0.0	.067		.016		–	<8'	0.13	20		1	1.02	0
114	27+00 Rt	114	Slotted Drain	6.60	0	6.60	0.0	.067		.059		.35	3.05	0.02	30		1	6.60	0
	Ramp	D-1																	
104	13+48.4 Lt	104	Type 3, w/2-3' wings	1.76	0	1.76	0.0	.083		.018		–	<8'	1.56	10.08		1	1.76	0

Computed by: GAG 1/94 Checked by: D. Schook Date: 1/94

20-0405 12/74

ARIZONA DEPARTMENT OF TRANSPORTATION

STORM SEWER INLET CALCULATION RECORD

LOCATION DATA

Highway SR 153

Location Phoenix, AZ

Project No.

DESIGN DATA

Frequency 10 years

P_6= 2.03 in. P_{24}= 2.43 in. P_1= 1.55 in.

T_{all} 8'

n 0.016

INLET CALCULATIONS (Ramp ES)

Inlet No	Inlet Station	DA No	Inlet Type	Q cfs	Q_c cfs	Q_T cfs	So %	Gutter S_x	Gutter z/n	Pavement S_x	Pavement z/n	D ft.	T ft.	a in.	Inlet Act.	Inlet Corr.	Q_i/Q	Q_i cfs	Q_c cfs
138	16+95 Lt	138	Slotted Drain	1.14	0	1.14	0.0	.067		.033		–	<8'	1.03	40		1	1.14	0
139	18+30 Rt	139	↑	1.63	0	1.63	0.0	.067		.01		–	<8'	1.71	30		1	1.63	0
140	22+50 Rt	140	↓	1.27	0	1.27	3.2	.067		.06		.20	3.03	0.21	20	14.30	1	1.27	0
141	31+20 Rt	141	Slotted Drain	2.25	0	2.25	1.6	.067		.02		.27	7.41	1.41	20	16.18	1	2.25	0

Computed by: GAG 1/94 Checked by: D. Schous Date: 1/94

20-0405 12/74

ARIZONA DEPARTMENT OF TRANSPORTATION

STORM SEWER INLET CALCULATION RECORD

LOCATION DATA

Highway SR 153

Location Phoenix, AZ

Project No.

DESIGN DATA

Frequency 10 years

P_6= 2.03 in. P_{24}= 2.43 in. P_1= 1.55 in.

T_{all} 8'

n 0.016

INLET CALCULATIONS (Ramp NW)

Inlet		DA No	Inlet Type	Q cfs	Q_c cfs	Q_T cfs	So %	Gutter		Pavement		D ft.	T ft.	a in.	Inlet		Q_i/Q	Q_i cfs	Q_c cfs
No	Station							S_x	z/n	S_x	z/n				Act.	Corr.			
136	13+50 Lt	136	Type 4 off-road	2.19	0	2.19	NA	NA		NA		NA	NA	NA	NA	NA	1	2.19	0
137	14+08 Lt	137	slotted Drain	2.94	0	2.94	0.0	.067		.06		–	<8'	.21	20		1	2.94	0

Computed by: GAG 1/94 Checked by: D. Schaub Date: 1/94

20-0405 12/74

ARIZONA DEPARTMENT OF TRANSPORTATION

STORM SEWER INLET CALCULATION RECORD

LOCATION DATA

Highway SR 153

Location Phoenix

Project No.

DESIGN DATA

Frequency 50 years

P_6= 2.75 in. P_{24}= 3.37 in. P_1= 2.13 in.

T_{all} Varies - 8' min

n 0.016

INLET CALCULATIONS

Inlet No	Inlet Station	DA No	Inlet Type	Q* cfs	Q_c cfs	Q_T cfs	So %	Gutter S_x	Gutter z/n	Pavement S_x	Pavement z/n	D ft.	T ft.	a in.	Inlet Act.	Inlet Corr.	Q_i/Q	Q_i cfs	Q_c cfs
104	13+48.4		Type 3, w/2.3' wing	2.54	0	2.54	0	.083		.018		.27	7	1.56	10.08		1	2.54	0
105	13+55		Slotted Drain	5.5	0	5.5	0	.067		.02		<.3	9'±	1.41	30		1	5.5	0
108	19+80		Slotted Drain	1.1	0	1.1	0	.067		.044		0.1	<2'	.69	20		1	1.1	0
110	22+22		Slotted Drain	1.47	0	1.47	0	.067		.016		.13	<2'	1.53	20		1	1.47	0
114	27+00		Slotted Drain	19.3	0	19.3	0	.067		.059		.38	6.1	.24	30		1	19.3	0
115	78+35		Slotted Drain	13.9	0	13.9	0	.067		.058		.6	10	.27	20		1	13.9	0
126	119+80		Slotted Drain	8.8	0	8.8	0	.067		.02		.08	<2'	1.41	40		1	8.8	0
137	14+08		Slotted Drain	9.4	0	9.4	0	.067		.06		.44	7	.21	20		1	9.4	0
138	16+95		Slotted Drain	1.64	0	1.64	0	.067		.033		<.17	<2'	1.03	40		1	1.64	0
139	18+30		Slotted Drain	2.9	0	2.9	0	.067		.01		<.17	<2'	1.71	30		1	2.9	0

* Assume all Q > Q_{10} bypasses CB's to sump.

Computed by: GAG Checked by: D. Schenk Date: 4/14/94

20-0405 12/74

Allow for future CB @ 62+60 Lt

High Point @ 58+30

$A = 45' \times (6260 - 5830) = 0.45$ Ac.

$Q = 0.45 \times 4.085 = 1.84$ cfs.

$S_x = 0.02'/ft$ S_L @ 62+40 $= 0.0114'/ft$

$d = (.067 - .02) \times 2.5 \times 12 = 1.41$ in.

Use 20' slotted drain

BRW
MINNEAPOLIS PHOENIX

JOB SR 153 SHEET NO.
MADE BY gag DATE 12/2/93 JOB NO.
CHECKED BY LM DATE 12/21/93 SEC. SHT. NO.
CALCULATIONS FOR Q_{10} - 62+60 Lt - SB F-9

****
***** ROADWAY DRAINAGE DESIGN *****
****

DESIGNER: GAG

DATE: 12-02-1993

PROJECT: SR 153

PROJECT NO.:

INLET NO.:

STATION: 62+60 LT

DRAINAGE AREA: .45 Acres

DESIGN FREQUENCY: 10 Years

ROADWAY & DISCHARGE DATA

Cross-Slope	S (ft/ft)	Sx (ft/ft)	n	Q (cfs)	T (ft)
Composite	0.011	0.020	0.016	1.84	7.29

GUTTER FLOW

W (ft)	Sw (ft/ft)	a (in)	Eo	d (ft)	V (fps)
2.50	0.067	1.41	0.804	0.26	2.71

INLET INTERCEPTION

Inlet Type	LT (ft)	L (ft)	E	Qi (cfs)	Qb (cfs)
Slotted Drain	13.39	0.00	0.000	0.00	1.84

Allow for future C.B. @ 62+95 Rt. NB

High Point = 58+30

$A = (6295 - 5830) \times 72' - (230' \times 28')^{\pm} \div 43{,}560$

$= 0.62$ Ac.

$Q = 4.085 \times 0.62 = 2.53$ cfs.

$S_X = 0.02'/ft$ S_L @ 63+73 $= 0.015'/ft$

$d = (.067 - .02) \times 2.5 \times 12 = 1.41$ in

Use 20' slotted drain

BRW
MINNEAPOLIS PHOENIX

JOB SR 153 SHEET NO.
MADE BY gag DATE 12/2/93 JOB NO.
CHECKED BY LM DATE 12/21/93 SEC. SHT. NO.
CALCULATIONS FOR Q10 - 62+95 Rt - NB F-11

****
***** ROADWAY DRAINAGE DESIGN *****
****

DESIGNER: GAG

DATE: 12-22-1993

PROJECT: SR 153

PROJECT NO.:

INLET NO.:

STATION: 62+95 RT

DRAINAGE AREA: .62 Acres

DESIGN FREQUENCY: 10 Years

ROADWAY & DISCHARGE DATA

Cross-Slope	S (ft/ft)	Sx (ft/ft)	n	Q (cfs)	T (ft)
Composite	0.015	0.020	0.016	2.53	8.02

GUTTER FLOW

W (ft)	Sw (ft/ft)	a (in)	Eo	d (ft)	V (fps)
2.50	0.067	1.41	0.741	0.28	3.19

INLET INTERCEPTION

Inlet Type	LT (ft)	L (ft)	E	Qi (cfs)	Qb (cfs)
Slotted Drain	16.98	0.00	0.000	0.00	2.53

F-12

Allow for future CB @ 68+66 Lt

$A = (6866 - 6260) \times 45' \div 43{,}560 = 0.63$ Ac.

$Q = 0.63 \times 4.085 = 2.57$ cfs.

$S_x = 0.02'/ft \quad S_L = 2.0\%$

$d = (.067 - .02) \times 2.5 \times 12 = 1.41$ in.

use 20' slotted drain.

BRW
MINNEAPOLIS PHOENIX

JOB SR 153 SHEET NO.
MADE BY gag DATE 12/2/93 JOB NO.
CHECKED BY LM DATE 12/21/93 SEC. SHT. NO.
CALCULATIONS FOR Q10 - 68+66 Lt - SB F-13

```
*****************************************
*****     ROADWAY DRAINAGE DESIGN     *****
*****************************************
```

DESIGNER: GAG

DATE: 12-02-1993

PROJECT: SR 153

PROJECT NO.:

INLET NO.:

STATION: 68+66 LT

DRAINAGE AREA: .63 Acres

DESIGN FREQUENCY: 10 Years

ROADWAY & DISCHARGE DATA

Cross-Slope	S (ft/ft)	Sx (ft/ft)	n	Q (cfs)	T (ft)
Composite	0.020	0.020	0.016	2.57	7.50

GUTTER FLOW

W (ft)	Sw (ft/ft)	a (in)	Eo	d (ft)	V (fps)
2.50	0.067	1.41	0.792	0.27	3.62

INLET INTERCEPTION

Inlet Type	LT (ft)	L (ft)	E	Qi (cfs)	Qb (cfs)
Slotted Drain	18.34	0.00	0.000	0.00	2.57

Allow for future CB @ 68+75 NB Rt

$A = (6875 - 6295) \times 72' / 43,560 = 0.96$ Ac.

$Q = 0.96 \times 4.085 = 3.92$ cfs.

w/ 30' slotted drain, @ 68+43,

$S_x = 0.013$ $S_L = 0.016$ '/ft

$d = (.067 - .013) \times 2.5 \times 12 = 1.62$ in.

Use 30' slotted drain

BRW
MINNEAPOLIS PHOENIX

JOB SR 153 SHEET NO.
MADE BY gag DATE 12/2/93 JOB NO.
CHECKED BY LM DATE 12/21/93 SEC. SHT. NO.
CALCULATIONS FOR Q10 - 68+75 Rt - NB F-15

```
*****************************************
*****    ROADWAY DRAINAGE DESIGN    *****
*****************************************
```

DESIGNER: GAG

DATE: 12-02-1993

PROJECT: SR 153

PROJECT NO.:

INLET NO.:

STATION: 68+75 RT

DRAINAGE AREA: .96 Acres

DESIGN FREQUENCY: 10 Years

ROADWAY & DISCHARGE DATA

Cross-Slope	S (ft/ft)	Sx (ft/ft)	n	Q (cfs)	T (ft)
Composite	0.016	0.013	0.016	3.92	12.69

GUTTER FLOW

W (ft)	Sw (ft/ft)	a (in)	Eo	d (ft)	V (fps)
2.50	0.067	1.62	0.603	0.30	3.22

INLET INTERCEPTION

Inlet Type	LT (ft)	L (ft)	E	Qi (cfs)	Qb (cfs)
Slotted Drain	23.49	0.00	0.000	0.00	3.92

Allow for future (SB) CB @ 72+32 Lt

$A = (7232 - 6866) \times \frac{46' + 52'}{2} \div 43{,}560$

$= 0.41$ Ac.

$Q = 0.41 \times 4.085 = 1.67$ cfs

S_x @ 72+11 = 0.059'/ft $S_L = 1.45\%$

$d = (.067 - .059) \times 2.5 \times 12 = 0.24$ in

Spillover to Ramp C

$= 18' \times 52' \div 43{,}560 \times 4.085$

$= 0.09$ cfs OK.

Use 20 L.F. Slotted Drain

BRW
MINNEAPOLIS PHOENIX

JOB SR 153 SHEET NO.
MADE BY gag DATE 12/2/93 JOB NO.
CHECKED BY LM DATE 12/21/93 SEC. SHT. NO.
CALCULATIONS FOR Q_{10} - 72+32 Lt - SB F-17

```
*****************************************
*****     ROADWAY DRAINAGE DESIGN     *****
*****************************************
```

DESIGNER: GAG

DATE: 12-02-1993

PROJECT: SR 153

PROJECT NO.:

INLET NO.:

STATION: 72+32 LT

DRAINAGE AREA: .41 Acres

DESIGN FREQUENCY: 10 Years

ROADWAY & DISCHARGE DATA

Cross-Slope	S (ft/ft)	Sx (ft/ft)	n	Q (cfs)	T (ft)
Composite	0.015	0.059	0.016	1.67	3.99

GUTTER FLOW

W (ft)	Sw (ft/ft)	a (in)	Eo	d (ft)	V (fps)
2.50	0.067	0.24	0.933	0.26	3.36

INLET INTERCEPTION

Inlet Type	LT (ft)	L (ft)	E	Qi (cfs)	Qb (cfs)
Slotted Drain	12.70	0.00	0.000	0.00	1.67

Allow for future C.B. @ 72+32 Median NB

$A = (7232 - 6875) \times \frac{71' + 64}{2} \div 43{,}560$

$= 0.55$ Ac.

$Q = 4.085 \times 0.55 = 2.25$ cfs.

$S_X = 0.057'/'$ $\quad S_L = 1.2\%$

$d = 0.00$ in.

Use 20' slotted drain

JOB SR 153 SHEET NO.

MADE BY gang DATE 11/18/93 JOB NO.

CHECKED BY lm DATE 12/21/93 SEC. SHT. NO.

CALCULATIONS FOR Q_{10} - 72+32 Median - NB F-19

BRW

MINNEAPOLIS PHOENIX

```
*****************************************
*****    ROADWAY DRAINAGE DESIGN    *****
*****************************************
```

DESIGNER: GAG

DATE: 11-18-1993

PROJECT: SR 153

PROJECT NO.:

INLET NO.:

STATION: 72+32 MEDIAN

DRAINAGE AREA: .55 Acres

DESIGN FREQUENCY: 10 Years

ROADWAY & DISCHARGE DATA

Cross-Slope	S (ft/ft)	Sx (ft/ft)	n	Q (cfs)	T (ft)
Uniform	0.012	0.057	0.016	2.24	4.90

GUTTER FLOW

W (ft)	Sw (ft/ft)	a (in)	Eo	d (ft)	V (fps)
2.50	0.057	0.00	0.850	0.28	3.27

INLET INTERCEPTION

Inlet Type	LT (ft)	L (ft)	E	Qi (cfs)	Qb (cfs)
Slotted Drain	14.89	0.00	0.000	0.00	2.24

Allow for C.B. @ 75+09 Median N.B.

$A = (7509 - 7232) \times \frac{64' + 58.42}{2} \div 43,560$

$= 0.39$ Ac.

$Q = 4.085 \times 0.39 = 1.59$ cfs

w/ 40' slotted drain, @ 74+67

$S_X = 0.012'/ft$ $S_L = 0.2\%$ $d = 0$

Check spread @ mid-point of slotted drain w/ $Q_T/2$

$Q_T/2 = 0.80$ cfs

$S_X = 0.00826'/ft$ $S_L = 0.2^{\pm}$

$T = 15.6' < 16'$ OK

Use 40' slotted drain.

BRW
MINNEAPOLIS PHOENIX

JOB SR 153 SHEET NO.
MADE BY gag DATE 11/18/93 JOB NO.
CHECKED BY JLM DATE 12/21/93 SEC. SHT. NO.
CALCULATIONS FOR Q10 - 75+09 Median - NB F-21

****
***** ROADWAY DRAINAGE DESIGN *****
****

DESIGNER: GAG

DATE: 11-18-1993

PROJECT: SR 153

PROJECT NO.:

INLET NO.: ///

STATION: 75+09 MEDIAN

DRAINAGE AREA: .39 Acres

DESIGN FREQUENCY: 10 Years

ROADWAY & DISCHARGE DATA

Cross-Slope	S (ft/ft)	Sx (ft/ft)	n	Q (cfs)	T (ft)
Uniform	0.002	0.012	0.016	1.58	15.96

GUTTER FLOW

W (ft)	Sw (ft/ft)	a (in)	Eo	d (ft)	V (fps)
2.50	0.012	0.00	0.365	0.19	1.04

INLET INTERCEPTION

Inlet Type	LT (ft)	L (ft)	E	Qi (cfs)	Qb (cfs)
Slotted Drain	19.13	0.00	0.000	0.00	1.58

```
*****************************************
*****    ROADWAY DRAINAGE DESIGN    *****
*****************************************
```

DESIGNER: GAG

DATE: 11-18-1993

PROJECT: SR 153

PROJECT NO.:

INLET NO.: ///

STATION: 75+09 MEDIAN

DRAINAGE AREA: .39 Acres

DESIGN FREQUENCY: 10 Years

ROADWAY & DISCHARGE DATA

Cross-Slope	S (ft/ft)	Sx (ft/ft)	n	Q (cfs)	T (ft)
Composite	0.002	0.008	0.016	0.79	15.58

GUTTER FLOW

W (ft)	Sw (ft/ft)	a (in)	Eo	d (ft)	V (fps)
2.50	0.008	0.00	0.372	0.13	0.79

INLET INTERCEPTION

Inlet Type	LT (ft)	L (ft)	E	Qi (cfs)	Qb (cfs)
Slotted Drain	18.02	0.00	0.000	0.00	0.79

77+05 RT NB SR 153

A = (7705 - 7509) x 58.42 ÷ 43,560 = 0.26 ac.

Q = 0.26 x 4.085 = 1.06 cfs.

w/10' slotted drain, begin drain at 7705 - 12 = 76+93

@ 76+93, S_x = 0.035'/ft S_L = 0.9%

d = (.067 - .035) x 30 = 0.96

Use 10' slotted drain

BRW

JOB SR 153 SHEET NO.

MADE BY gag DATE 12/2/93 JOB NO.

CHECKED BY LM DATE 12/21/93 SEC. SHT. NO.

CALCULATIONS FOR Q10 - 77+05 Rt - NB F-24

```
*****************************************
*****    ROADWAY DRAINAGE DESIGN    *****
*****************************************
```

DESIGNER: GAG

DATE: 12-02-1993

PROJECT: SR 153

PROJECT NO.:

INLET NO.: //3

STATION: 77+05 RT

DRAINAGE AREA: .26 Acres

DESIGN FREQUENCY: 10 Years

ROADWAY & DISCHARGE DATA

Cross-Slope	S (ft/ft)	Sx (ft/ft)	n	Q (cfs)	T (ft)
Composite	0.009	0.035	0.016	1.04	4.39

GUTTER FLOW

W (ft)	Sw (ft/ft)	a (in)	Eo	d (ft)	V (fps)
2.50	0.067	0.96	0.935	0.23	2.42

INLET INTERCEPTION

Inlet Type	LT (ft)	L (ft)	E	Qi (cfs)	Qb (cfs)
Slotted Drain	9.19	0.00	0.000	0.00	1.04

CB @ 78+35 Median - SB SR 153 #115

$A = (8645 - 7835) \times 58.42$

$+ (7835 - 7529) \times \frac{58.42 + 81}{2} \div 43{,}560$

$= 1.57$ Ac.

$Q = 4.085 \times 1.57 = 6.41$ cfs.

$S_x = 0.058'/'$ S_L = Sump

$d_{Allowable} = 16' \times 0.058 = 0.93'$

Use 20 LF slotted drain (10' each way)

d_{actual} 0.17'

BRW MINNEAPOLIS PHOENIX

JOB SR 153 SHEET NO.

MADE BY gag DATE 12/2/93 JOB NO.

CHECKED BY LM DATE 12/21/93 SEC. SHT. NO.

CALCULATIONS FOR Q_{10} - 78+35 Median - SB F-2

STORM SEWER HEC 12 SINGLE INLET REPORT

C.B. # 115
78+35 SB Median

FLOW RESULTS (cfs)

Flow from Catchment	= 6.41	PONDING WIDTH (ft)	= **********
Carryover from previous inlet	= 0.00	DEPTH AT CURB (ft)	= 0.17
Total flow to current inlet	= 6.41	EFFICIENCY (%)	
Intercepted by current inlet	= 6.41	Curb = *	
Bypassed by current inlet	= 0.00	Grate = *	Total = 100.00
		Slot = 100.00	

INPUT PARAMETERS:

Inlet Type	= SLOTTED IN SAG	Longitudinal Slope (ft/ft)	= 0.000
Gutter Width (ft)	= 10.000	Pavement Cross Slope (ft/ft)	= 0.058
Inlet n-value	= 0.016	Normal Gutter XSlope (ft/ft)	= 0.058
Downstream Inlet number	= 0	Gutter depression (in)	= 0.00
Slot Length (ft)	= 20.00		
Slot Width (in)	= 1.75		
Curb Weir Coeff.	= 2.300		
Curb Orifice Coeff.	= 0.670		
Trans. Orifice Coeff.	= 0.670		

Sta 84+00 Rt. NB SR 153

$A = (8945 - 8400)\frac{(64+75)}{2} \div 43{,}560 = 0.87\ Ac$

$Q = 4.085 \times 0.87 = 3.55\ cfs.$

@ 84+00 + 2' + 20' (84+22), $S_x = .053'/ft$

$S_L = 0.8481 - \frac{(.059-.02)}{105} \times 49'_{ave} \times 100 = 0.31\%$

$d = (.067 - .053) \times 30 = 0.42\ in.$

Use 20' slotted drain

BRW

JOB SR 153 SHEET NO.

MADE BY gag DATE 11/28/93 JOB NO.

CHECKED BY LM DATE 12/21/93 SEC. SHT. NO.

CALCULATIONS FOR Q_{10} - 84+00 Rt - NB F-28

****
***** ROADWAY DRAINAGE DESIGN *****
****

DESIGNER: GAG

DATE: 11-28-1993

PROJECT: SR 153

PROJECT NO.:

INLET NO.: 116

STATION: 84+00 RT

DRAINAGE AREA: .87 Acres

DESIGN FREQUENCY: 10 Years

ROADWAY & DISCHARGE DATA

Cross-Slope	S (ft/ft)	Sx (ft/ft)	n	Q (cfs)	T (ft)
Composite	0.003	0.053	0.016	3.55	7.68

GUTTER FLOW

W (ft)	Sw (ft/ft)	a (in)	Eo	d (ft)	V (fps)
2.50	0.067	0.42	0.669	0.44	2.20

INLET INTERCEPTION

Inlet Type	LT (ft)	L (ft)	E	Qi (cfs)	Qb (cfs)
Slotted Drain	11.40	0.00	0.000	0.00	3.55

C.B. @ (86+25) + 20' = 86+45 Lt SB SR 153

A_T = (8945 - 8645) x 58.42 % 43,560 = 0.40 Ac.

Q_T = 4.085 x 0.40 = 1.63 cfs.

S_L = 0.8481 %

Because of cross slope transition, gutter slope is practically flat.

Gutter slope = 0.8481 - $\frac{.02 \times 34}{75}$ x100 = 0.0586%

Note: w/30' slotted drain, T > 16'

w/ 40' slotted drain, find S_X @ begin drain

S_X @ 8645 + 2' + 40' = 86+87

= 0.0163'/ft

d = (.067 - .0163) x 30 = 1.52 in.

Q_1 = (8945 - 8687) x 58.42 % 43,560 x 4.085

= 1.41 cfs

check spread @ center of slotted drain for $Q_T/2$

@ Sta 86+67, S_X = 0.0114'/ft

d = (.067 - .0114) x 30 = 1.67 in.

$Q_T/2$ = 1.63 %2 = 0.82 cfs.

T = 14.36 < 16' OK.

Use 10' slotted drain.

BRW MINNEAPOLIS PHOENIX

JOB SR 153 SHEET NO. 3

MADE BY gay DATE 11/28/93 JOB NO.

CHECKED BY LM DATE 12/21/93 SEC. SHT. NO.

CALCULATIONS FOR Q_{10} - 86+45 Lt - SB F-30

****
***** ROADWAY DRAINAGE DESIGN *****
****

DESIGNER: GAG

DATE: 11-28-1993

PROJECT: SR 153

PROJECT NO.:

INLET NO.: 117

STATION: 86+45 LT

DRAINAGE AREA: .40 Acres

DESIGN FREQUENCY: 10 Years

ROADWAY & DISCHARGE DATA

Cross-Slope	S (ft/ft)	Sx (ft/ft)	n	Q (cfs)	T (ft)
Composite	0.001	0.016	0.016	1.42	14.80

GUTTER FLOW

W (ft)	Sw (ft/ft)	a (in)	Eo	d (ft)	V (fps)
2.50	0.066	1.52	0.496	0.37	0.73

INLET INTERCEPTION

Inlet Type	LT (ft)	L (ft)	E	Qi (cfs)	Qb (cfs)
Slotted Drain	6.02	0.00	0.000	0.00	1.42

****
***** ROADWAY DRAINAGE DESIGN *****
****

DESIGNER: GAG

DATE: 11-28-1993

PROJECT: SR 153

PROJECT NO.:

INLET NO.: 117

STATION: 86+45 LT

DRAINAGE AREA: .4 Acres

DESIGN FREQUENCY: 10 Years

ROADWAY & DISCHARGE DATA

Cross-Slope	S (ft/ft)	Sx (ft/ft)	n	Q (cfs)	T (ft)
Composite	0.001	0.011	0.016	0.82	14.36

GUTTER FLOW

W (ft)	Sw (ft/ft)	a (in)	Eo	d (ft)	V (fps)
2.50	0.067	1.67	0.563	0.30	0.60

INLET INTERCEPTION

Inlet Type	LT (ft)	L (ft)	E	Qi (cfs)	Qb (cfs)
Slotted Drain	4.69	0.00	0.000	0.00	0.82

89+45 Median NB SR 153

w/70' of slotted drain, Begin drain at

89+45 +72' = 90+17

$A_1 = (9500-9320)(58.42) + (9320-9017)\frac{58.42+63}{2}$

$\div 43,560 = 0.66$ Ac.

$A_T = A_1 + \frac{63+64}{2} \times (9017-8945) \div 43,560 = 0.77$ Ac

$Q_1 = 4.085 \times 0.66 = 2.70$ cfs

$Q_T = 4.085 \times 0.77 = 3.15$ cfs.

@ 90+17, $S_X = 0.0186$ '/ft d = 0.0 in.

S_L along gutter $= 0.8481 - \frac{(.051 \times 34')}{2.50} = 0.1545\%$

T = 14.64' < 16' OK.

Check spread @ center of slotted drain using $Q_T/2$.

@ 89+82, $S_X = 0.018$ '/ft d = 0.0"

Because of long length of slotted drain, check $Q_T/2$ after deducting 1/2 the slotted drain length. $\Rightarrow \frac{3.15 - (35 \times 63.5 \div 43,560 \times 4.085)}{2} = 1.47$ cfs.

T = 16.26 > 16' NG.

BRW

JOB SR 153 SHEET NO.

MADE BY gag DATE 11/18/93 JOB NO.

CHECKED BY LM DATE 12/21/93 SEC. SHT. NO.

CALCULATIONS FOR Q_{10} - 89+45 Median - NB F-33

89+45 Median NB (cont'd.)

w/ 80' slotted drain, check $Q_T/2$

@ 89+87

$S_X = 0.0126'/'$ $S_L = 0.1545\%$ $d = 0$

$Q_T = 3.15$ cfs.

Deduct last 40 feet contributing to Q_T.

$40' \times 63.5' \div 43{,}560 \times 4.085 = 0.24$ cfs

$\therefore Q_T/2 = \frac{3.15 - 0.24}{2} = 1.46$ cfs.

$T = 15.73' < 16'$ OK.

use 80' slotted drain.

@ 90+27, $S_X = 0.0208'/'$ (Begin slotted drain)

BRW MINNEAPOLIS PHOENIX

JOB SR 153 SHEET NO.

MADE BY gag DATE 11/18/93 JOB NO.

CHECKED BY DJD DATE 11/19/93 SEC. SHT. NO.

CALCULATIONS FOR Q10 - 89+45 Median - NB F-34

****
***** ROADWAY DRAINAGE DESIGN *****
****

DESIGNER: GAG

DATE: 11-18-1993

PROJECT: SR 153

PROJECT NO.:

INLET NO.: 118

STATION: 89+45 MEDIAN

DRAINAGE AREA: .77 Acres

DESIGN FREQUENCY: 10 Years

ROADWAY & DISCHARGE DATA

Cross-Slope	S (ft/ft)	Sx (ft/ft)	n	Q (cfs)	T (ft)
Composite	0.002	0.013	0.016	1.46	15.73

GUTTER FLOW

W (ft)	Sw (ft/ft)	a (in)	Eo	d (ft)	V (fps)
2.50	0.012	0.00	0.369	0.20	0.93

INLET INTERCEPTION

Inlet Type	LT (ft)	L (ft)	E	Qi (cfs)	Qb (cfs)
Slotted Drain	16.81	0.00	0.000	0.00	1.46

****
***** ROADWAY DRAINAGE DESIGN *****
****

DESIGNER: GAG

DATE: 01-15-1994

PROJECT: SR 153

PROJECT NO.:

INLET NO.: 118

STATION: 89+45 MEDIAN

DRAINAGE AREA: .77 Acres

DESIGN FREQUENCY: 10 Years

ROADWAY & DISCHARGE DATA

Cross-Slope	S (ft/ft)	Sx (ft/ft)	n	Q (cfs)	T (ft)
Composite	0.002	0.021	0.016	3.15	15.35

GUTTER FLOW

W (ft)	Sw (ft/ft)	a (in)	Eo	d (ft)	V (fps)
2.50	0.020	0.00	0.377	0.32	1.28

INLET INTERCEPTION

Inlet Type	LT (ft)	L (ft)	E	Qi (cfs)	Qb (cfs)
Slotted Drain	17.16	0.00	0.000	0.00	3.15

89 + 45 Lt SB SR 153

$A = (9500 - 8945) \times 58.42\% \; 43{,}560 = 0.75$ Ac

$Q = 0.75 \times 4.085 = 3.06$ cfs

$S_L = 0.8481\%$ $S_X = 0.02$ 1/ft

$d = (.067 - .02) \times 2.5 \times 12 = 1.41$ in.

Use 20' slotted drain

BRW

JOB SR 153 SHEET NO.

MADE BY gag DATE 11/27/93 JOB NO.

CHECKED BY LM DATE 12/21/93 SEC. SHT. NO.

CALCULATIONS FOR Q10 - 89+45 Lt - SB F-37

****
***** ROADWAY DRAINAGE DESIGN *****
****

DESIGNER: GAG

DATE: 11-27-1993

PROJECT: SR 153

PROJECT NO.:

INLET NO.: 119

STATION: 89+45 LT

DRAINAGE AREA: .75 Acres

DESIGN FREQUENCY: 10 Years

ROADWAY & DISCHARGE DATA

Cross-Slope	S (ft/ft)	Sx (ft/ft)	n	Q (cfs)	T (ft)
Composite	0.008	0.020	0.016	3.05	10.13

GUTTER FLOW

W (ft)	Sw (ft/ft)	a (in)	Eo	d (ft)	V (fps)
2.50	0.067	1.41	0.649	0.32	2.60

INLET INTERCEPTION

Inlet Type	LT (ft)	L (ft)	E	Qi (cfs)	Qt (cfs)
Slotted Drain	16.42	0.00	0.000	0.00	3.05

95+00 Median NB SR 153

A = 535 x 58.42 ÷ 43,560 = 0.72 Ac.

Q = 4.085 x 0.72 = 2.94

+ 0.33 bridge bypass

3.27 cfs

S_L = 0.8481% S_X = 0.051'/ft

d = 0.00 in.

Use 20' slotted drain

BRW

JOB SR 153 SHEET NO.

MADE BY gag DATE 11/18/93 JOB NO.

CHECKED BY LM DATE 12/21/93 SEC. SHT. NO.

CALCULATIONS FOR Q_{10} - 95+00 Median - NB F-39

****
***** ROADWAY DRAINAGE DESIGN *****
****

DESIGNER: GAG

DATE: 01-14-1994

PROJECT: SR 153

PROJECT NO.:

INLET NO.: 120

STATION: 95+00 MEDIAN

DRAINAGE AREA: .72 Acres

DESIGN FREQUENCY: 10 Years

ROADWAY & DISCHARGE DATA

Cross-Slope	S (ft/ft)	Sx (ft/ft)	n	Q (cfs)	T (ft)
Uniform	0.008	0.051	0.016	3.27	6.45

GUTTER FLOW

W (ft)	Sw (ft/ft)	a (in)	Eo	d (ft)	V (fps)
2.50	0.051	0.00	0.728	0.33	3.07

INLET INTERCEPTION

Inlet Type	LT (ft)	L (ft)	E	Qi (cfs)	Qb (cfs)
Slotted Drain	16.81	0.00	0.000	0.00	3.27

95+00 Lt SB SR 153

A = 500' x 58.42 ·/. 43,560 = 0.67 Ac.

Ci = 4.085

Q = 4.085 x 0.67 = 2.74 + 0.33 (bridge bypass)

= 3.07 cfs.

S_L = 0.8481 % S_X = 0.051 '/ft

d = (.067-.051) x 30 = 0.48 in.

Use 20' slotted drain.

BRW

JOB SR 153 SHEET NO.

MADE BY gag DATE 12/2/93 JOB NO.

CHECKED BY LM DATE 12/21/93 SEC. SHT. NO.

CALCULATIONS FOR Q_{10} - 95+00 Lt - SB F-41

****
***** ROADWAY DRAINAGE DESIGN *****
****

DESIGNER: GAG

DATE: 12-02-1993

PROJECT: SR 153

PROJECT NO.:

INLET NO.: 121

STATION: 95+00 LT

DRAINAGE AREA: .67 Acres

DESIGN FREQUENCY: 10 Years

ROADWAY & DISCHARGE DATA

Cross-Slope	S (ft/ft)	Sx (ft/ft)	n	Q (cfs)	T (ft)
Composite	0.008	0.051	0.016	3.07	6.06

GUTTER FLOW

W (ft)	Sw (ft/ft)	a (in)	Eo	d (ft)	V (fps)
2.50	0.067	0.48	0.781	0.35	3.10

INLET INTERCEPTION

Inlet Type	LT (ft)	L (ft)	E	Qi (cfs)	Qb (cfs)
Slotted Drain	14.36	0.00	0.000	0.00	3.07

Sta 117+45 Lt - SB SR 153

$A_T = \frac{65+74}{2} \times (11745 - 11292) \div 43{,}560 = 0.72$ Ac.

$Q_T = 0.72 \times 4.085 + 0.27$ cfs bridge bypass

$= 3.21$ cfs.

w/ 20' slotted drain, find Q at begin slotted drain = 11745 - 22' = 117+23

$Q_1 = 3.21 - (22 \times 74' \div 43{,}560 \times 4.085)$

$= 3.21 - 0.15 = 3.06$ cfs.

$S_x = 0.036$ ft/ft $\quad S_L = 0.6\%$ @ 117+23

$d = (.067 - .036) \times 30 = 0.93$ in.

Use 20' slotted drain

BRW
MINNEAPOLIS PHOENIX

JOB SR 153 SHEET NO.
MADE BY gag DATE 11/15/93 JOB NO.
CHECKED BY LM DATE 12/21/93 SEC. SHT. NO.
CALCULATIONS FOR Q_{10} - 117+45 Lt - SB F-43

****
***** ROADWAY DRAINAGE DESIGN *****
****

DESIGNER: GAG

DATE: 11-15-1993

PROJECT: SR 153

PROJECT NO.:

INLET NO.: 122

STATION: 117+45 LT

DRAINAGE AREA: .72 Acres

DESIGN FREQUENCY: 10 Years

ROADWAY & DISCHARGE DATA

Cross-Slope	S (ft/ft)	Sx (ft/ft)	n	Q (cfs)	T (ft)
Composite	0.006	0.036	0.016	3.08	7.84

GUTTER FLOW

W (ft)	Sw (ft/ft)	a (in)	Eo	d (ft)	V (fps)
2.50	0.067	0.93	0.698	0.36	2.55

INLET INTERCEPTION

Inlet Type	LT (ft)	L (ft)	E	Qi (cfs)	Qb (cfs)
Slotted Drain	13.73	0.00	0.000	0.00	3.08

Check Spread @ 118+50 Median NB SR 153

$$A = \underbrace{(11637 - 11262) \times \frac{75' + 101'}{2}}_{33{,}000\ ft^2}$$

$$+ (11850 - 11637) \times 58.42 \div 43{,}560 = 1.04\ Ac$$

$$Q = 1.04 \times 4.085 = 4.25 + 0.27\ cfs \text{ bridge bypass}$$

$$= 4.6\ cfs$$

$S_x = 0.0102'/ft$ $S_L = 0.253\%$ $T = 25.2' > 16'$ N.G.

∴ Place C.B. @ 117+45 Median

$$A = 33{,}000\ ft^2 + (11745 - 11637)\,58.42$$

$$\div 43{,}560 = 0.90\ Ac.$$

$$Q = 0.90 \times 4.085 = 3.68\ cfs. + 0.27 \text{ bypass}$$

$$= 3.95\ cfs.$$

w/30' slotted drain, analyze @ 11745 - 32 = 117+13

$S_x = 0.038'/ft$ $S_L = 1.08\%$ $d = 0.0\ in.$

L req'd = 23' $T = 7.8'$

∴ Use 30' slotted drain.

BRW
MINNEAPOLIS PHOENIX

JOB SR 153 SHEET NO.
MADE BY gog DATE 11/18/93 JOB NO.
CHECKED BY LM DATE 12/21/93 SEC. SHT. NO.
CALCULATIONS FOR Q_{10} - 117+45 Median - NB F-45

****
***** ROADWAY DRAINAGE DESIGN *****
****

DESIGNER: GAG

DATE: 01-17-1994

PROJECT: SR 153

PROJECT NO.:

INLET NO.: 123

STATION: 117+45 MEDIAN

DRAINAGE AREA: .9 Acres

DESIGN FREQUENCY: 10 Years

ROADWAY & DISCHARGE DATA

Cross-Slope	S (ft/ft)	Sx (ft/ft)	n	Q (cfs)	T (ft)
Uniform	0.011	0.038	0.016	3.95	7.96

GUTTER FLOW

W (ft)	Sw (ft/ft)	a (in)	Eo	d (ft)	V (fps)
2.50	0.038	0.00	0.633	0.30	3.27

INLET INTERCEPTION

Inlet Type	LT (ft)	L (ft)	E	Qi (cfs)	Qb (cfs)
Slotted Drain	23.35	0.00	0.000	0.00	3.95

CB @ 118+78 Median NB SR 153 # 124

$A = (11900 - 11745) \times 58.42' \div 43,560 = 0.21 Ac$

$Q = 0.21 \times 4.085 = 0.86$ cfs.

$S_X = 0.0045'/ft.$ S_L = Sump.

$d_{allowable} = 0.0045 \times 16' = 0.07'$

$d_{act} = 0.04'$ OK.

Use 40' slotted drain.

check spread @ 118+55

$Q = (11855 - 11745) \times 58.42 \div 43,560 \times 4.085$

$= 0.60$ cfs

$S_X = 0.009'/ft$ $S_L = 0.22\%$ $d = 0$

$T = 13' < 16'$ O.K.

BRW
MINNEAPOLIS PHOENIX

JOB SR 153 SHEET NO.
MADE BY gag DATE 11/18/93 JOB NO.
CHECKED BY LM DATE 12/21/93 SEC. SHT. NO.
CALCULATIONS FOR Q_{10} - 118+78 Median - NB F-47

STORM SEWER HEC 12 SINGLE INLET REPORT

CB # 124
118+78 NB Median.

FLOW RESULTS (cfs)

Flow from Catchment	= 0.86	PONDING WIDTH (ft)	= **********
Carryover from previous inlet	= 0.00	DEPTH AT CURB (ft)	= 0.04
Total flow to current inlet	= 0.86	EFFICIENCY (%)	
Intercepted by current inlet	= 0.86	Curb = *	
Bypassed by current inlet	= 0.00	Grate = *	Total = 100.00
		Slot = 100.00	

INPUT PARAMETERS:

Inlet Type	= SLOTTED IN SAG	Longitudinal Slope (ft/ft)	= 0.000
Gutter Width (ft)	= 10.000	Pavement Cross Slope (ft/ft)	= 0.004
Inlet n-value	= 0.016	Normal Gutter XSlope (ft/ft)	= 0.004
Downstream Inlet number	= 0	Gutter depression (in)	= 0.00
Slot Length (ft)	= 40.00		
Slot Width (in)	= 1.75		
Curb Weir Coeff.	= 2.300		
Curb Orifice Coeff.	= 0.670		
Trans. Orifice Coeff.	= 0.670		

Check Spread @ 119+80 - 22' = 119+58

$A = (11958 - 11745) \times \frac{74+81}{2} \div 43,560 = 0.38$ Ac.

$Q = 0.38 \times 4.085 = 1.55$ cfs

$S_x = 0.02'/ft$ $d = 1.41$ in $S_L = 0.2\%$

$T = 10.33' > 8'$ N.G.

CB @ 119+00 Lt - SB SR 153

$A = (11900 - 11745) \times \frac{74+79}{2} \div 43,560$

$= 0.27$ Ac.

$Q = 0.27 \times 4.085 = 1.10$ cfs

w/ 10' slotted drain, check spread

@ 119+00 - 12' = 118+88

$S_x = 0.02'/ft$ $d = 1.41$ in. $S_L = 0.5\%$

$T = 6.88' < 8'$ OK.

Use 10' slotted drain

BRW
MINNEAPOLIS PHOENIX

JOB SR 153 SHEET NO.
MADE BY gag DATE 11/15/93 JOB NO.
CHECKED BY LM DATE 12/21/93 SEC. SHT. NO.
CALCULATIONS FOR Q10 - 119+00 Lt - SB F-49

****
***** ROADWAY DRAINAGE DESIGN *****
****

DESIGNER: GAG

DATE: 11-15-1993

PROJECT: SR 153

PROJECT NO.:

INLET NO.: 125

STATION: 119+00 LT

DRAINAGE AREA: .27 Acres

DESIGN FREQUENCY: 10 Years

ROADWAY & DISCHARGE DATA

Cross-Slope	S (ft/ft)	Sx (ft/ft)	n	Q (cfs)	T (ft)
Composite	0.005	0.020	0.016	1.10	6.88

GUTTER FLOW

W (ft)	Sw (ft/ft)	a (in)	Eo	d (ft)	V (fps)
2.50	0.067	1.41	0.828	0.26	1.77

INLET INTERCEPTION

Inlet Type	LT (ft)	L (ft)	E	Qi (cfs)	Qb (cfs)
Slotted Drain	8.32	0.00	0.000	0.00	1.10

Sta 119+80 Lt - SB SR 153 (# 126)

$A = (12198 - 11900) \times \frac{79' + 91'}{2} \div 43{,}560$

$= 0.58$ Ac.

$Q = 0.58 \times 4.085 = 2.37$ cfs.

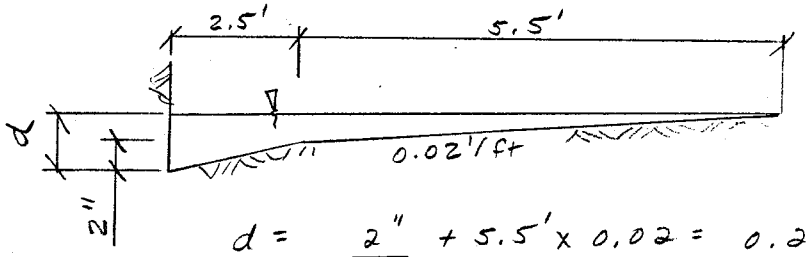

$d_{max} = \frac{2''}{12} + 5.5' \times 0.02 = 0.28'$

$L_{req'd} = 10'$ S_L = Sump $S_X = 0.02'/ft$

Use 20' each way to pick up water through flat gutter section.

Use 40' slotted drain.

$d_{act} = 0.09'$

BRW
MINNEAPOLIS PHOENIX

JOB SR 153 SHEET NO.
MADE BY gag DATE 11/15/93 JOB NO.
CHECKED BY LM DATE 12/21/93 SEC. SHT. NO.
CALCULATIONS FOR Q_{10} - 119+80 Lt - SB F-51

STORM SEWER HEC 12 SINGLE INLET REPORT

CB #126
119+80 Lt

FLOW RESULTS (cfs)		PONDING WIDTH (ft)	= **********
Flow from Catchment	= 2.37	DEPTH AT CURB (ft)	= 0.09
Carryover from previous inlet	= 0.00	EFFICIENCY (%)	
Total flow to current inlet	= 2.37	Curb = *	
Intercepted by current inlet	= 2.37	Grate = *	Total = 100.00
Bypassed by current inlet	= 0.00	Slot = 100.00	

INPUT PARAMETERS:

Inlet Type	= SLOTTED IN SAG	Longitudinal Slope (ft/ft)	= 0.000
Gutter Width (ft)	= 2.500	Pavement Cross Slope (ft/ft)	= 0.020
Inlet n-value	= 0.016	Normal Gutter XSlope (ft/ft)	= 0.067
Downstream Inlet number	= 0	Gutter depression (in)	= 0.00
Slot Length (ft)	= 40.00		
Slot Width (in)	= 1.75		
Curb Weir Coeff.	= 2.300		
Curb Orifice Coeff.	= 0.670		
Trans. Orifice Coeff.	= 0.670		

C.B. @ 119+95 Rt SR 153 (#127)

$A = (12276 - 11900) \times 58.42$

$+ (12330 - 12276)\, 60.5 \quad \div 43{,}560 = 0.58$ Ac.

$Q = 0.58 \times 4.085 = 2.37$ cfs

S_L = Sump $\quad S_x = 0.02$ ft/ft

$d_{max} = \frac{2''}{12} + 13.5(.02) = 0.44'$

Use 10' slotted drain North and

20' slotted drain South

= 30' slotted drain

$d_{Act.} = 0.11'$

BRW
MINNEAPOLIS PHOENIX

JOB SR 153 SHEET NO.
MADE BY gag DATE 11/15/93 JOB NO.
CHECKED BY LM DATE 12/2/93 SEC. SHT. NO.
CALCULATIONS FOR Q10 - 119+95 Rt - NB F-53

STORM SEWER HEC 12 SINGLE INLET REPORT

CB # 127
119+95 Rt

FLOW RESULTS (cfs)

Flow from Catchment	= 2.37	PONDING WIDTH (ft)	= **********
Carryover from previous inlet	= 0.00	DEPTH AT CURB (ft)	= 0.11
Total flow to current inlet	= 2.37	EFFICIENCY (%)	
Intercepted by current inlet	= 2.37	Curb = *	
Bypassed by current inlet	= 0.00	Grate = *	Total = 100.00
		Slot = 100.00	

INPUT PARAMETERS:

Inlet Type	= SLOTTED IN SAG	Longitudinal Slope (ft/ft)	= 0.000
Gutter Width (ft)	= 2.500	Pavement Cross Slope (ft/ft)	= 0.020
Inlet n-value	= 0.016	Normal Gutter XSlope (ft/ft)	= 0.067
Downstream Inlet number	= 0	Gutter depression (in)	= 0.00
Slot Length (ft)	= 30.00		
Slot Width (in)	= 1.75		
Curb Weir Coeff.	= 2.300		
Curb Orifice Coeff.	= 0.670		
Trans. Orifice Coeff.	= 0.670		

Check Spread @ 123+30 Rt

$A = (12710 - 12330) \times \frac{62' + 89'}{2} \div 43{,}560$

$= 0.66$ Ac.

$Q = 0.66 \times 4.085 = 2.70$ cfs.

w/ 20' slotted drain, @ 123+52

$S_X = 0.02'/ft.$ $S_L = 1.9\%$

$T = 7.80' < 8'$ OK.

Use 20' slotted drain.

BRW
MINNEAPOLIS PHOENIX

JOB SR 153 SHEET NO.
MADE BY gag DATE 11/18/93 JOB NO.
CHECKED BY LM DATE 12/21/93 SEC. SHT. NO.
CALCULATIONS FOR Q10 - 123+30 Rt - NB F-55

****
***** ROADWAY DRAINAGE DESIGN *****
****

DESIGNER: GAG

DATE: 11-18-1993

PROJECT: SR 153

PROJECT NO.:

INLET NO.: 128

STATION: 123+30 RT

DRAINAGE AREA: .66 Acres

DESIGN FREQUENCY: 10 Years

ROADWAY & DISCHARGE DATA

Cross-Slope	S (ft/ft)	Sx (ft/ft)	n	Q (cfs)	T (ft)
Composite	0.019	0.020	0.016	2.70	7.80

GUTTER FLOW

W (ft)	Sw (ft/ft)	a (in)	Eo	d (ft)	V (fps)
2.50	0.067	1.41	0.774	0.27	3.56

INLET INTERCEPTION

Inlet Type	LT (ft)	L (ft)	E	Qi (cfs)	Qb (cfs)
Slotted Drain	18.61	0.00	0.000	0.00	2.70

124+10 Median - SB SR 153

Cross-slope @ 123+90 = 0.00'/ft.

High Point @ 127+51

$A_T = (12751 - 12410) \times 58.42\% \ 43{,}560 = 0.46$ Ac.

$Q_T = 0.46 \times 4.085 = 1.88$ cfs.

w/ 20' slotted drain, check spread

@ 124+10 +22' = 124+32

$S_X = 0.00672'/ft$ $S_L = 1.6\%$

d = 0.00 in.

Q @ 124+32

$= (12751 - 12432) \times 58.42\% \ 43{,}560 \times 4.085$

$= 1.75$ cfs $T = 16.09' > 16'$ N.G.

Try 30' slotted drain;

@ 124+42, $S_X = 0.00832'/ft$. $S_L = 1.6\%$

$Q = (12751 - 12442) \times 58.42\% \ 43{,}560 \times 4.085$

$= 1.69$ cfs.

$T = 13.90 < 16'$ OK.

BRW
MINNEAPOLIS PHOENIX

JOB SR 153 SHEET NO.
MADE BY gag DATE 12/16/93 JOB NO.
CHECKED BY LM DATE 12/21/93 SEC. SHT. NO.
CALCULATIONS FOR Q_{10} - 123+98 Median - SB F-57

124+10 Median SB SR 153 (Cont'd)

w/ 30' slotted drain,

Check $Q_{T/2}$ @ center of slotted drain
= 124+27

S_x = 0.0059'/ft S_L = 1.6%

Q_T = 1.88 cfs $1/2\ Q_T$ = 0.94 cfs

T = 13.8 < 16 However from center of slotted drain, 46' slotted drain is req'd > 15' used.

∴ use 40' slotted drain
Place C.B. @ 124+08 (to avoid approach slab)

Check $Q_{T/2}$ @ center of slotted drain. (124+30)

S_x = 0.0064 S_L = 1.6%

d = 0.0

Q_T = 1.88 cfs $1/2\ Q_T$ = 0.94 cfs Req'd L = 42.4' > 20' NG

w/ 40', @ 124+50, S_L = 1.6%, S_x = 0.0096'/ft, d = 0"

Spread = 13.23', Lreq'd = 44.54' ∴ Place CB @ 123+98 w/ 50' slotted drain.
A = (12751 - 12452) x 58.42 + (12452 - 12398) 54.5
÷ 43,560 = 0.47 Ac. Q = 0.47 x 4.085 = 1.92 cfs.

BRW
MINNEAPOLIS PHOENIX

JOB SR 153 SHEET NO.
MADE BY gag DATE 12/16/93 JOB NO.
CHECKED BY DJS DATE 12/18/93 SEC. SHT. NO.
CALCULATIONS FOR Q10 - 123+98 Median - SB F-58

****
***** ROADWAY DRAINAGE DESIGN *****
****

DESIGNER: GAG

DATE: 12-16-1993

PROJECT: SR 153

PROJECT NO.:

INLET NO.: 129

STATION: 123+98 MEDIAN

DRAINAGE AREA: .47 Acres

DESIGN FREQUENCY: 10 Years

ROADWAY & DISCHARGE DATA

Cross-Slope	S (ft/ft)	Sx (ft/ft)	n	Q (cfs)	T (ft)
Composite	0.016	0.010	0.016	1.91	13.33

GUTTER FLOW

W (ft)	Sw (ft/ft)	a (in)	Se	d (ft)	V (fps)
2.50	0.009	0.00	0.425	0.13	2.24

INLET INTERCEPTION

Inlet Type	LT (ft)	L (ft)	E	Qi (cfs)	Qb (cfs)
Slotted Drain	44.93	0.00	0.000	0.00	1.91

CB @ 133+30 Rt - NB SR 153

$A = (13330 - 12835) \times 58.42' + (53' \times 60') \div 43{,}560$
$= 0.74$ Ac

$Q = 0.74 \times 4.085 = 3.02$ cfs

w/ 30' slotted drain, at 132+98,

$S_X = 0.032'/ft$ $S_L = 3.3\%$

$d = (.067 - .032) \times 30 = 1.05$ in.

Check 1/2 Q at center of slotted drain:

@ 133+13, $S_X = 0.032'/ft$

$S_L = 3.4\%$

$d = 1.05$ in.

$L_{Req'd} = 15.8'$ say ok.

Use 30' slotted drain

BRW

JOB SR 153 SHEET NO.
MADE BY gag DATE 12/7/93 JOB NO.
CHECKED BY LM DATE 12/21/93 SEC. SHT. NO.
CALCULATIONS FOR Q10 - 133+30 Rt - NB F-60

****
***** ROADWAY DRAINAGE DESIGN *****
****

DESIGNER: GAG

DATE: 01-10-1994

PROJECT: SR 153

PROJECT NO.:

INLET NO.: 130

STATION: 133+30 RT

DRAINAGE AREA: .74 Acres

DESIGN FREQUENCY: 10 Years

ROADWAY & DISCHARGE DATA

Cross-Slope	S (ft/ft)	Sx (ft/ft)	n	Q (cfs)	T (ft)
Composite	0.033	0.032	0.016	3.01	5.60

GUTTER FLOW

W (ft)	Sw (ft/ft)	a (in)	Eo	d (ft)	V (fps)
2.50	0.067	1.05	0.860	0.27	4.92

INLET INTERCEPTION

Inlet Type	LT (ft)	L (ft)	E	Qi (cfs)	Qb (cfs)
Slotted Drain	21.69	0.00	0.000	0.00	3.01

CB @ 133+30 Median - SB SR 153

$A = (13208 - 12751) \times 58.42$

$+ (13330 - 13208) \times \frac{58.42 + 59.5'}{2} \div 43,560$

$= 0.78$ Ac.

$Q = 0.78 \times 4.085 = 3.19$ cfs.

w/50' slotted drain, @ 132+78

$S_X = .032'/ft$ $S_L = 3.18\ \%$ $d = 0.0$ in.

Check $Q_{T/2}$ @ mid point of slotted dr.:

@ 133+03, $S_X = 0.032'/ft$

$d = 0.0$ in

$S_L = 3.33\ \%$

$Q_{T/2} = 1.6$ cfs

$L_{reqd} = 24.8' \approx 25'$ provided O.K.

Use 50' slotted drain.

BRW

JOB SR 153 SHEET NO.

MADE BY gog DATE 12/7/93 JOB NO.

CHECKED BY LM DATE 12/21/93 SEC. SHT. NO.

CALCULATIONS FOR Q_{10} - 133+30 Median - SB F-62

****
***** ROADWAY DRAINAGE DESIGN *****
****

DESIGNER: GAG

DATE: 12-07-1993

PROJECT: SR 153

PROJECT NO.:

INLET NO.: 131

STATION: 133+30 Median

DRAINAGE AREA: .78 Acres

DESIGN FREQUENCY: 10 Years

ROADWAY & DISCHARGE DATA

Cross-Slope	S (ft/ft)	Sx (ft/ft)	n	Q (cfs)	T (ft)
Uniform	0.032	0.032	0.016	3.19	6.68

GUTTER FLOW

W (ft)	Sw (ft/ft)	a (in)	Eo	d (ft)	V (fps)
2.50	0.032	0.00	0.713	0.21	4.46

INLET INTERCEPTION

Inlet Type	LT (ft)	L (ft)	E	Qi (cfs)	Qb (cfs)
Slotted Drain	32.72	0.00	0.000	0.00	3.19

C.B. @ 5+00 Rt - Ramp A #132

$A = (43' \times 91') + (81' \times 26') + (31' \times 61')$

$+ (86 \times 25) \div 43{,}560 = 0.23$ Ac

$Q = 0.23 \times 4.085 = 0.94$ cfs.

S_L = Sump $S_x = 0.05'/ft$

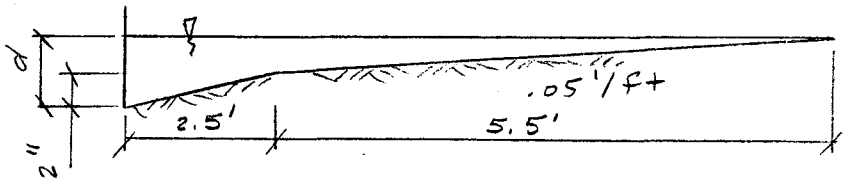

$d_{max} = \frac{2''}{12} + (5.5 \times 0.05) = 0.44'$

Slotted drain length (L) req'd = 5'

Use 30' to south & 10' to north.

to capture water - Gutter slope

is < 0.1%

$d_{act} = 0.05'$

BRW
MINNEAPOLIS PHOENIX

JOB SR 153 SHEET NO.
MADE BY gag DATE 12/06/93 JOB NO.
CHECKED BY LM DATE 12/21/93 SEC. SHT. NO.
CALCULATIONS FOR Q10 - 5+00 Rt - Ramp A F-64

STORM SEWER HEC 12 SINGLE INLET REPORT

CB # 132
5+00 Rt - Ramp A

```
FLOW RESULTS (cfs)                          PONDING WIDTH (ft)        = ****************************************
  Flow from Catchment          =   0.94    DEPTH AT CURB (ft)        =   0.05
  Carryover from previous inlet =  0.00    EFFICIENCY (%)
  Total flow to current inlet  =   0.94      Curb  =      *
  Intercepted by current inlet =   0.94      Grate =      *    Total = 100.00
  Bypassed by current inlet    =   0.00      Slot  = 100.00

INPUT PARAMETERS:
 Inlet Type          = SLOTTED IN SAG  Longitudinal Slope (ft/ft)   =  0.000
 Gutter Width (ft)           =  2.500  Pavement Cross Slope (ft/ft) =  0.050
 Inlet n-value               =  0.016  Normal Gutter XSlope (ft/ft) =  0.067
 Downstream Inlet number     =      0  Gutter depression (in)       =  0.00
 Slot Length (ft)       =  40.00
 Slot Width (in)        =   1.75
 Curb Weir Coeff.       =  2.300
 Curb Orifice Coeff.    =  0.670
 Trans. Orifice Coeff.  =  0.670
```

C.B. 9+20 Rt - Ramp A

$A = (920 - 666) \times 25 \div 43{,}560 = 0.15$ Ac.

$Q = 0.15 \times 4.085 = 0.61$ cfs.

w/ 10' slotted drain, @ 9+08,

$S_x = 0.0137$ '/ft $S_L = 1.65\%$

$d = (.067 - .0137) \times 30 = 1.60$ in.

$T = 2.79'$

Use 10' slotted drain

BRW
MINNEAPOLIS PHOENIX

JOB SR 153 SHEET NO.
MADE BY gag DATE 12/7/93 JOB NO.
CHECKED BY LM DATE 12/21/93 SEC. SHT. NO.
CALCULATIONS FOR Q_{10} - 9+20 Rt - Ramp A F-66

****
***** ROADWAY DRAINAGE DESIGN *****
****

DESIGNER: GAG

DATE: 12-07-1993

PROJECT: SR 153

PROJECT NO.:

INLET NO.: /33

STATION: 9+20'A' RT

DRAINAGE AREA: .15 Acres

DESIGN FREQUENCY: 10 Years

ROADWAY & DISCHARGE DATA

Cross-Slope	S (ft/ft)	Sx (ft/ft)	n	Q (cfs)	T (ft)
Composite	0.017	0.014	0.016	0.61	2.79

GUTTER FLOW

W (ft)	Sw (ft/ft)	a (in)	Eo	d (ft)	V (fps)
2.50	0.067	1.60	0.999	0.17	2.77

INLET INTERCEPTION

Inlet Type	LT (ft)	L (ft)	E	Qi (cfs)	Qb (cfs)
Slotted Drain	8.61	0.00	0.000	0.00	0.61

CB @ 13+50 Lt - Ramp A

$A = (1350 - 920) \times 25 \div 43{,}560 = 0.25$ Ac.

$Q_{10} = 0.25 \times 4.085 = 1.02$ cfs

w/ 10' slotted drain, @ 13+38,

$S_X = 0.0128$ '/ft $\quad S_L = 2.15\%$

$d = (.067 - .0128) \times 30 = 1.63$ in.

L Req'd = 12' ∴ use 20' slotted drain

w/ 20', @ 13+28,

$S_X = 0.0168$ '/ft $\quad S_L = 2.28\%$

$d = (0.067 - .0168) \times 30 = 1.51$ in.

Use 20' slotted drain.

BRW
MINNEAPOLIS PHOENIX

JOB SR 153 SHEET NO.
MADE BY gaz DATE 12/7/93 JOB NO.
CHECKED BY LM DATE 12/21/93 SEC. SHT. NO.
CALCULATIONS FOR Q10 - 13+50 Lt - Ramp A F-68

****
***** ROADWAY DRAINAGE DESIGN *****
****

DESIGNER: GAG

DATE: 12-07-1993

PROJECT: SR 153

PROJECT NO.:

INLET NO.: 134

STATION: 13+50'A' LT

DRAINAGE AREA: .25 Acres

DESIGN FREQUENCY: 10 Years

ROADWAY & DISCHARGE DATA

Cross-Slope	S (ft/ft)	Sx (ft/ft)	n	Q (cfs)	T (ft)
Composite	0.023	0.017	0.016	1.01	4.10

GUTTER FLOW

W (ft)	Sw (ft/ft)	a (in)	Eo	d (ft)	V (fps)
2.50	0.067	1.51	0.979	0.19	3.41

INLET INTERCEPTION

Inlet Type	LT (ft)	L (ft)	E	Qi (cfs)	Qb (cfs)
Slotted Drain	11.82	0.00	0.000	0.00	1.01

CB @ 15+38 Rt - Ramp A #135

$A = (1420-1350)\,25 + (1510-1420) \times \frac{25+31}{2}$

$+ (1675-1510) \times 31' + (2850-2550) \times 29'$

$= 0.42$ Ac.

$Q_{10} = 0.42 \times 4.085 = 1.72$ cfs.

$Q_{50} = 1.72 \times 1.442 = 2.5$ cfs

$d_{allowable} = \frac{2''}{12} + 5.5'(.02'/ft) = 0.28'$

$S_x = 0.02'/ft \qquad S_L = 0.0$

$L_{req'd} = 5'$ Use 10' each way

due to flat gutter slope

Use 20' slotted drain.

$d_{Act} = 0.11'$

JOB SR 153 SHEET NO.

MADE BY gaz DATE 12/7/93 JOB NO.

CHECKED BY DJ DATE 12/10/93 SEC. SHT. NO.

CALCULATIONS FOR Q_{10} - 15+38 Rt - Ramp A F-76

BRW MINNEAPOLIS PHOENIX

STORM SEWER HEC 12 SINGLE INLET REPORT

CB # 135
15+38 Rt - Ramp A

```
FLOW RESULTS (cfs)                          PONDING WIDTH (ft)        = ************************************
  Flow from Catchment            =   1.72   DEPTH AT CURB (ft)        =   0.11
  Carryover from previous inlet  =   0.00   EFFICIENCY (%)
  Total flow to current inlet    =   1.72     Curb  =      *
  Intercepted by current inlet   =   1.72     Grate =      *    Total = 100.00
  Bypassed by current inlet      =   0.00     Slot  = 100.00

INPUT PARAMETERS:
 Inlet Type          = SLOTTED IN SAG  Longitudinal Slope (ft/ft)   =  0.000
 Gutter Width (ft)           =  2.500  Pavement Cross Slope (ft/ft) =  0.020
 Inlet n-value               =  0.016  Normal Gutter XSlope (ft/ft) =  0.067
 Downstream Inlet number     =      0  Gutter depression (in)       =  0.00
 Slot Length (ft)       =  20.00
 Slot Width (in)        =   1.75
 Curb Weir Coeff.       =  2.300
 Curb Orifice Coeff.    =  0.670
 Trans. Orifice Coeff.  =  0.670
```

Spillway Embankment @ 13+25 Lt - Ramp C

$A = 11,700 + (20 \times 31) + (222 \times 74) \div 43,560$

$= 0.66$ Ac.

$Q = 0.66 \times 4.085 = 2.70$ cfs

$S_x = 0.02'/ft$ $\quad S_L = Sump.$

Allowable Spread = 8'

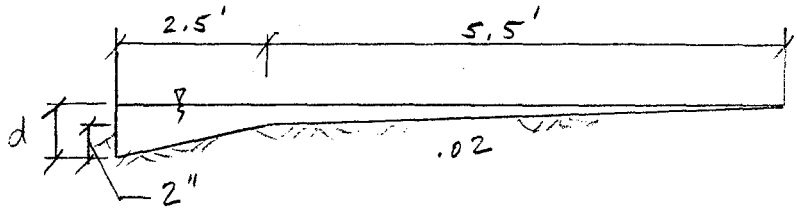

$d = \frac{2''}{12} + 5.5(.02) = 0.28'$

From Chart $L = 8$

w/20% clogging, $\frac{8}{0.8} = 10 < 13'$ OK.

BRW
MINNEAPOLIS PHOENIX

JOB SR 153 SHEET NO.
MADE BY gog DATE 12/1/93 JOB NO.
CHECKED BY LM DATE 12/20/93 SEC. SHT. NO.
CALCULATIONS FOR Q_{10} - 13+75 Lt - Ramp C F-7

Embankment Spillway @ 14+25 Lt - Ramp C

$A = (75 \times 70) + (75 \times 66) \div 43{,}560 = 0.24\ Ac$

$Q = 0.24 \times 4.085 = 0.98\ cfs.$

$S_x = 0.02 \quad S_L = 0.008\ '/ft$

$d = (.067 - .02) \times 2.5 \times 12 = 1.41\ in.$

Curb Opening Req'd = 8.42'

w/ 20% clogging $\Rightarrow \frac{8.42}{0.8} = 10.5' < 13.5$ OK.

BRW
MINNEAPOLIS PHOENIX

JOB SR 153 SHEET NO.
MADE BY gag DATE 12/1/93 JOB NO.
CHECKED BY LM DATE 12/20/93 SEC. SHT. NO.
CALCULATIONS FOR Q_{10} - 14+25 Lt - Ramp C F-73

****
***** ROADWAY DRAINAGE DESIGN *****
****

DESIGNER: GAG

DATE: 04-07-1994

PROJECT: SR 153

PROJECT NO.:

INLET NO.:

STATION: 14+25'C' LT

DRAINAGE AREA: .24 Acres

DESIGN FREQUENCY: 10 Years

ROADWAY & DISCHARGE DATA

Cross-Slope	S (ft/ft)	Sx (ft/ft)	n	Q (cfs)	T (ft)
Composite	0.008	0.020	0.016	0.98	5.66

GUTTER FLOW

W (ft)	Sw (ft/ft)	a (in)	Eo	d (ft)	V (fps)
2.50	0.067	1.41	0.900	0.23	2.08

INLET INTERCEPTION

Inlet Type	LT (ft)	W (ft)	E	Qi (cfs)	Qb (cfs)
Curb-Opening	8.70	0.00	0.000	0.00	0.98

Embankment Spillway @ 15+75 Lt.
Ramp C

$A = 225' \times 57' \div 43{,}560 = 0.30\ Ac$

$Q = 0.30 \times 4.085 = 1.23\ cfs$

$S_x = 0.02'/ft \quad S_L = 0.008'/ft$

$d = (.067 - .02) \times 2.5 \times 12 = 1.41\ in.$

Curb Opening Req'd = 10.68'

w/ 20% clogging $10.68 \div 0.8 = 13.35 < 13.5$ OK.

BRW
MINNEAPOLIS PHOENIX

JOB SR 153 SHEET NO.
MADE BY gag DATE 12/1/93 JOB NO.
CHECKED BY LM DATE 12/20/93 SEC. SHT. NO.
CALCULATIONS FOR Q_{10} - 15+75 Lt - Ramp C F-75

```
****************************************
*****    ROADWAY DRAINAGE DESIGN    *****
****************************************
```

DESIGNER: GAG

DATE: 04-07-1994

PROJECT: SR 153

PROJECT NO.:

INLET NO.:

STATION: 15+75'C' LT

DRAINAGE AREA: .3 Acres

DESIGN FREQUENCY: 10 Years

ROADWAY & DISCHARGE DATA

Cross-Slope	S (ft/ft)	Sx (ft/ft)	n	Q (cfs)	T (ft)
Composite	0.008	0.020	0.016	1.23	6.32

GUTTER FLOW

W (ft)	Sw (ft/ft)	a (in)	Eo	d (ft)	V (fps)
2.50	0.067	1.41	0.862	0.24	2.25

INLET INTERCEPTION

Inlet Type	LT (ft)	W (ft)	E	Qi (cfs)	Qb (cfs)
Curb-Opening	10.03	0.00	0.000	0.00	1.23

Ramp C - 18+00 Lt

$A_T = (154 \times 45) + (165 \times 43) \div 43{,}560 = 0.32$ Ac.

$A_{pirt} = (50 \times 17) + (103 \times 14) + (50 \times 12) + (116 \times 15) \div 43{,}560 = 0.11$ Ac

$Q = (.21 \times 0.95 \times 4.3) + (.11 \times 0.60 \times 4.3) = 1.14$ cfs

$S_X = 0.022'/'$ $\quad S_L = 0.006'/ft$

$d = (.067 - .022) \times 2.5 \times 12 = 1.35$ in.

Because a C.B. will be placed at 68+66 S.B. Lt, use slotted drain and C.B. @ 18+00 Lt - Ramp C

W/ 10' slotted drain, $S_X = 0.024'/ft$ $\quad S_L = 0.006'/ft$

$d = (.067 - .024) \times 2.5 \times 12 = 1.29$ in

Use 10' slotted drain

BRW
MINNEAPOLIS PHOENIX

JOB SR 153 SHEET NO.
MADE BY gag DATE 12/2/93 JOB NO.
CHECKED BY LM DATE 12/20/93 SEC. SHT. NO.
CALCULATIONS FOR Q_{10} - 18+00 Lt - Ramp C F-77

****
***** ROADWAY DRAINAGE DESIGN *****
****

DESIGNER: GAG

DATE: 04-07-1994

PROJECT: SR 153

PROJECT NO.:

INLET NO.: 107

STATION: 18+00'C' LT

DRAINAGE AREA: .32 Acres

DESIGN FREQUENCY: 10 Years

ROADWAY & DISCHARGE DATA

Cross-Slope	S (ft/ft)	Sx (ft/ft)	n	Q (cfs)	T (ft)
Composite	0.006	0.022	0.016	1.14	6.39

GUTTER FLOW

W (ft)	Sw (ft/ft)	a (in)	Eo	d (ft)	V (fps)
2.50	0.067	1.35	0.848	0.25	1.93

INLET INTERCEPTION

Inlet Type	LT (ft)	L (ft)	E	Qi (cfs)	Qb (cfs)
Slotted Drain	8.74	0.00	0.000	0.00	1.14

CB @ 21+15 Lt - Ramp C

$A = (7529 - 7250) \times \frac{81 + 101}{2}$

$+ (2167 - 2115) \times 44 \div 43{,}560$

$= 0.58 + 0.05 = 0.63$ ac.

$Q = 0.63 \times 4.085 = 2.57$ cfs.

$S.E. = 0.045'/_1 = S_x$

$d = (.067 - .045) \times 2.5 \times 12 = 0.66$ in.

$S_L = 0.396\%$

Use 20' slotted drain

BRW
MINNEAPOLIS PHOENIX

JOB SR 153 SHEET NO.
MADE BY gag DATE 12/1/93 JOB NO.
CHECKED BY LM DATE 12/21/93 SEC. SHT. NO.
CALCULATIONS FOR Q_{10} - 21+15 Lt - Ramp C F-79

****
***** ROADWAY DRAINAGE DESIGN *****
****

DESIGNER: GAG

DATE: 12-01-1993

PROJECT: SR 153

PROJECT NO.:

INLET NO.: 109

STATION: 21+15'C' LT

DRAINAGE AREA: .66 Acres

DESIGN FREQUENCY: 10 Years

ROADWAY & DISCHARGE DATA

Cross-Slope	S (ft/ft)	Sx (ft/ft)	n	Q (cfs)	T (ft)
Composite	0.004	0.045	0.016	2.57	7.03

GUTTER FLOW

W (ft)	Sw (ft/ft)	a (in)	Eo	d (ft)	V (fps)
2.50	0.067	0.66	0.725	0.37	2.18

INLET INTERCEPTION

Inlet Type	LT (ft)	L (ft)	E	Qi (cfs)	Qb (cfs)
Slotted Drain	10.86	0.00	0.000	0.00	2.57

Sta 10+25 Lt - Ramp C-1

$A = 8200\ ft^2 = .19\ Ac.$

$Q = 0.19 \times 4.085 = 0.78\ cfs$

w/ 10' curb opening use S_x & S_L @ 10+37

$S_x = 0.008'/ft$ $S_L = 0.014'/ft$

$d = (.083 - .008) \times 2 \times 12 = 1.80$

Use ADOT Catch Basin, Type 3 (C-15.20)
Sump + 10' wing.

Water sheeting across Ramp C

at 12+03.04 = (23' x 30' ÷ 43,560 x 4.085)

= 0.06 cfs.

BRW
MINNEAPOLIS PHOENIX

JOB SR 153 SHEET NO.
MADE BY gag DATE 12/7/93 JOB NO.
CHECKED BY LM DATE 12/21/93 SEC. SHT. NO.
CALCULATIONS FOR Q10 - 10+25 Lt - Ramp C-1 F-81

****
***** ROADWAY DRAINAGE DESIGN *****
****

DESIGNER: GAG

DATE: 12-07-1993

PROJECT: SR 153

PROJECT NO.: 103

INLET NO.:

STATION: 10+25' C1' LT

DRAINAGE AREA: .19 Acres

DESIGN FREQUENCY: 10 Years

ROADWAY & DISCHARGE DATA

Cross-Slope	S (ft/ft)	Sx (ft/ft)	n	Q (cfs)	T (ft)
Composite	0.014	0.008	0.016	0.77	6.61

GUTTER FLOW

W (ft)	Sw (ft/ft)	a (in)	Eo	d (ft)	V (fps)
2.00	0.083	1.80	0.899	0.20	2.40

INLET INTERCEPTION

Inlet Type	LT (ft)	W (ft)	E	Qi (cfs)	Qb (cfs)
Curb-Opening	8.42	0.00	0.000	0.00	0.77

Sta 13+55 Rt - Ramp D #105

$A_T = 8800\ ft^2 + (1325.5 - 1183.55) \times 79'$

$+ (1635 - 1325.5) \times \frac{79' + 65'}{2} \div 43{,}560 = 0.97\ Ac.$

$A_{Dirt} = (142 \times 36) + (310 \times 32) \div 43{,}560 = 0.34\ Ac.$

$Q = (0.63 \times 0.95 \times 4.3) + (0.34 \times 0.60 \times 4.3) = 3.45\ cfs.$

$S_X = 0.02'/ft \quad S_L = Sump.$

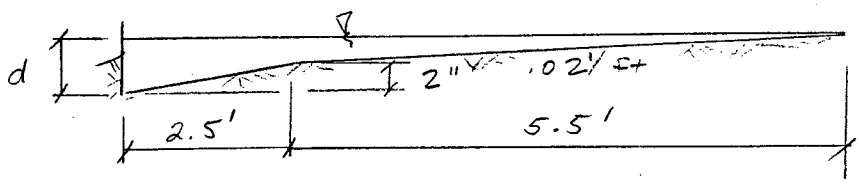

$d = \frac{2''}{12} + 5.5 \times .02 = 0.28'$

10' slotted drain N & S of C.B. Req'd.

However, use 30' (20' to south) for flat gutter.

BRW
MINNEAPOLIS PHOENIX

JOB SR 153 SHEET NO.
MADE BY gag DATE 12/7/93 JOB NO.
CHECKED BY LM DATE 12/20/93 SEC. SHT. NO.
CALCULATIONS FOR Q_{10} - 13+55 Rt - Ramp D F-83

STORM SEWER HEC 12 SINGLE INLET REPORT

C.B. # 105
13+55 Rt - Ramp D

```
FLOW RESULTS (cfs)                          PONDING WIDTH (ft)        = ************************************
  Flow from Catchment            =   3.45   DEPTH AT CURB (ft)        =   0.18
  Carryover from previous inlet =   0.00   EFFICIENCY (%)
  Total flow to current inlet    =   3.45     Curb =      *
  Intercepted by current inlet   =   3.45     Grate =     *    Total = 100.00
  Bypassed by current inlet      =   0.00     Slot  = 100.00

INPUT PARAMETERS:
 Inlet Type          = SLOTTED IN SAG  Longitudinal Slope (ft/ft)   =  0.000
 Gutter Width (ft)           =  2.500  Pavement Cross Slope (ft/ft) =  0.020
 Inlet n-value               =  0.016  Normal Gutter XSlope (ft/ft) =  0.067
 Downstream Inlet number     =      0  Gutter depression (in)       =  0.00
 Slot Length (ft)       =  20.00
 Slot Width (in)        =   1.75
 Curb Weir Coeff.       =  2.300
 Curb Orifice Coeff.    =  0.670
 Trans. Orifice Coeff.  =  0.670
```

Sta 16+35 Rt - Ramp D

$A_T = \frac{65' + 55'}{2} \times (1875 - 1635) \div 43,560 = 0.33$ Ac.

$A_{Dirt} = 240 \times 25 \div 43,560 = 0.14$ Ac.

$Q = (0.19 \times 0.95) + (0.14 \times 0.60) \times 4.3 = 1.14$ cfs

$S_x = 0.02$ ft/ft $\quad S_L = 0.44\%$

$d = (.067 - .02) \times 2.5 \times 12 = 1.41$ in.

Use 10 LF Slotted Drain

BRW
MINNEAPOLIS PHOENIX

JOB SR 153 SHEET NO.
MADE BY gaz DATE 12/2/93 JOB NO.
CHECKED BY LM DATE 12/20/93 SEC. SHT. NO.
CALCULATIONS FOR Q_{10} - 16+35 Rt - Ramp D F-85

```
*****************************************
*****    ROADWAY DRAINAGE DESIGN    *****
*****************************************
```

DESIGNER: GAG

DATE: 01-15-1994

PROJECT: SR 153

PROJECT NO.:

INLET NO.: 106

STATION: 16+35'D' RT

DRAINAGE AREA: .33 Acres

DESIGN FREQUENCY: 10 Years

ROADWAY & DISCHARGE DATA

Cross-Slope	S (ft/ft)	Sx (ft/ft)	n	Q (cfs)	T (ft)
Composite	0.004	0.020	0.016	1.14	7.27

GUTTER FLOW

W (ft)	Sw (ft/ft)	a (in)	Eo	d (ft)	V (fps)
2.50	0.067	1.41	0.805	0.26	1.68

INLET INTERCEPTION

Inlet Type	LT (ft)	L (ft)	E	Qi (cfs)	Qb (cfs)
Slotted Drain	8.22	0.00	0.000	0.00	1.14

Sta 19+80 Lt - Ramp D C.B. #108

$A_T = (2058 - 1875) \times \frac{55' + 50'}{2} \div 43{,}560 = 0.22 Ac.$

$A_{Dirt} = (183' \times 21) \div 43{,}560 = 0.09 Ac.$

$Q = (0.13 \times 0.95) + (0.09 \times 0.60) \times 4.3 = 0.76 cfs.$

$S_X = 0.044$ '/ft S_L = Sump.

From Chart $d < 0.12'$ OK.

Use 10' slotted drain, each way

Total = 20 L.F. slotted drain.

$d_{Act} = 0.06'$

BRW
MINNEAPOLIS PHOENIX

JOB SR 153 SHEET NO.
MADE BY gag DATE 12/2/93 JOB NO.
CHECKED BY LM DATE 12/20/93 SEC. SHT. NO.
CALCULATIONS FOR Q10 - 19+80 Lt - Ramp D F-87

STORM SEWER HEC 12 SINGLE INLET REPORT

CB # 108
19+80 Lt - Ramp D

FLOW RESULTS (cfs)

Flow from Catchment	= 0.76	PONDING WIDTH (ft)	= **********
Carryover from previous inlet	= 0.00	DEPTH AT CURB (ft)	= 0.06
Total flow to current inlet	= 0.76	EFFICIENCY (%)	
Intercepted by current inlet	= 0.76	Curb = *	
Bypassed by current inlet	= 0.00	Grate = *	Total = 100.00
		Slot = 100.00	

INPUT PARAMETERS:

Inlet Type	= SLOTTED IN SAG	Longitudinal Slope (ft/ft)	= 0.000
Gutter Width (ft)	= 2.500	Pavement Cross Slope (ft/ft)	= 0.044
Inlet n-value	= 0.016	Normal Gutter XSlope (ft/ft)	= 0.067
Downstream Inlet number	= 0	Gutter depression (in)	= 0.00
Slot Length (ft)	= 20.00		
Slot Width (in)	= 1.75		
Curb Weir Coeff.	= 2.300		
Curb Orifice Coeff.	= 0.670		
Trans. Orifice Coeff.	= 0.670		

22+22 Lt - Ramp D C.B. #110

$A_T = \frac{50' + +45}{2} \times (2325 - 2058) \div 43,560 = 0.29 Ac$

$A_{Dirt} = 267' \times 18' \div 43,560 = 0.11 Ac$

$Q = (0.18 \times .95) + (.11 \times 0.60) \times 4.3 = 1.02 cfs.$

$S_X = 0.016'/ft$ S_L = Sump.

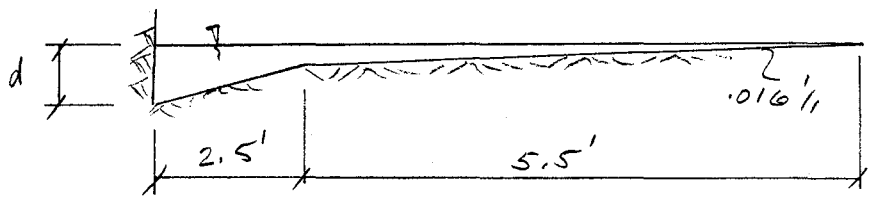

$d = 2'' + .016(5.5) = 0.25'$ = Allowable depth.

$d_{Act} = 0.08'$

Use 20 LF Slotted Drain

JOB SR 153 SHEET NO.
MADE BY gog DATE 12/2/93 JOB NO.
CHECKED BY LM DATE 12/20/93 SEC. SHT. NO.
CALCULATIONS FOR Q10 - 22+22 Lt - Ramp D F-89

BRW MINNEAPOLIS PHOENIX

STORM SEWER HEC 12 SINGLE INLET REPORT

CB # 110
22+22 Lt - Ramp D

```
FLOW RESULTS (cfs)                          PONDING WIDTH (ft)        = ************************************
  Flow from Catchment            =   1.02   DEPTH AT CURB (ft)        =   0.08
  Carryover from previous inlet  =   0.00   EFFICIENCY (%)
  Total flow to current inlet    =   1.02     Curb  =      *
  Intercepted by current inlet   =   1.02     Grate =      *    Total = 100.00
  Bypassed by current inlet      =   0.00     Slot  = 100.00

INPUT PARAMETERS:
 Inlet Type          = SLOTTED IN SAG  Longitudinal Slope (ft/ft)   =  0.000
 Gutter Width (ft)           =  2.500  Pavement Cross Slope (ft/ft) =  0.016
 Inlet n-value               =  0.016  Normal Gutter XSlope (ft/ft) =  0.067
 Downstream Inlet number     =      0  Gutter depression (in)       =  0.00
 Slot Length (ft)       =  20.00
 Slot Width (in)        =   1.75
 Curb Weir Coeff.       =  2.300
 Curb Orifice Coeff.    =  0.670
 Trans. Orifice Coeff.  =  0.670
```

C.B. @ 27+00 Rt Ramp D (78+40 Rt NB 153)

C.B. # 114

$S_x = 0.059$ S_L = Sump.

$A_T = (8400 - 7840) \times \frac{75' + 95'}{2} + (7840 - 7705) \times \frac{95 + 101}{2}$

$+ (2578 - 2325) \times 44' \div 43,560 = 1.65$

$A_{Dirt} = (2578 - 2325) \times 15' \div 43,560 = 0.09$ Ac.

$Q = (1.56 \times 0.95) + (.09 \times 0.60) \times 4.3 = 6.60$ cfs.

$S_x = 0.059'/'$

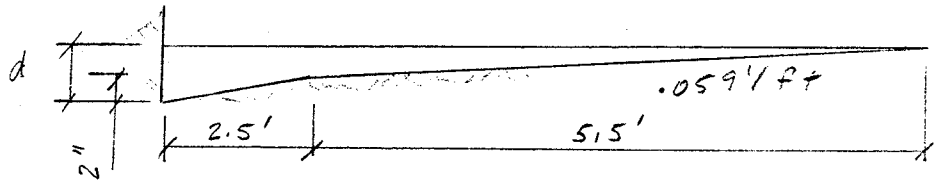

$d = \frac{2''}{12} + .059 \times 5.5 = 0.49'$

Say 10' each way

w/ 20', d = 0.35'

$d_{Act} = 0.18'$

From Q_{50} check, use 30' slotted drain (See F-172)

BRW
MINNEAPOLIS PHOENIX

JOB SR 153 SHEET NO.
MADE BY gag DATE 12/2/93 JOB NO.
CHECKED BY LM DATE 12/20/93 SEC. SHT. NO.
CALCULATIONS FOR Q10 - 27+00 Rt - Ramp D F-91

STORM SEWER HEC 12 SINGLE INLET REPORT

C.B. # 114
27+00 Rt - Ramp D

FLOW RESULTS (cfs)		PONDING WIDTH (ft)	= **********
Flow from Catchment	= 6.60	DEPTH AT CURB (ft)	= 0.18
Carryover from previous inlet	= 0.00	EFFICIENCY (%)	
Total flow to current inlet	= 6.60	Curb = *	
Intercepted by current inlet	= 6.60	Grate = *	Total = 100.00
Bypassed by current inlet	= 0.00	Slot = 100.00	

INPUT PARAMETERS:

Inlet Type	= SLOTTED IN SAG	Longitudinal Slope (ft/ft)	= 0.000
Gutter Width (ft)	= 2.500	Pavement Cross Slope (ft/ft)	= 0.059
Inlet n-value	= 0.016	Normal Gutter XSlope (ft/ft)	= 0.067
Downstream Inlet number	= 0	Gutter depression (in)	= 0.00
Slot Length (ft)	= 20.00		
Slot Width (in)	= 1.75		
Curb Weir Coeff.	= 2.300		
Curb Orifice Coeff.	= 0.670		
Trans. Orifice Coeff.	= 0.670		

Sta 13+48.42 Lt. - Ramp D-1 C.B. # 104

$A = (16,900 + 1,900)/43,560 = 0.43$ Ac

$Q = 0.43 \times 4.085 = 1.76$ cfs

$S_x = 0.018'/ft$

S_L = Sump

$d = (.083 - .018) \times 2 \times 12 = 1.56$ in.

For Curb Opening Inlet Capacity, $w/d = 0.27'$
find, from Chart, $L = 5.4'$

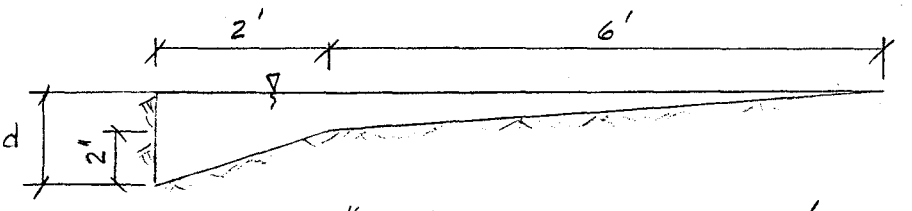

$d = \frac{2''}{12} + 6 \times 0.018 = 0.27'$

Increase L to account for 20% clogging.

$\frac{5.4}{0.8} = 6.75'$ Use ADOT C.B, Type 3 (C-15.20)
Sump + 2-3' wings = 10.08'

$d = 0.18'$ ✓

BRW
MINNEAPOLIS PHOENIX

JOB SR 153 SHEET NO.
MADE BY gag DATE 12/2/93 JOB NO.
CHECKED BY LM DATE 12/22/93 SEC. SHT. NO.
CALCULATIONS FOR Q10 - 13+48.4 Lt - Ramp D-1

STORM SEWER HEC 12 SINGLE INLET REPORT

CB #104
13+48.4 Lt
Ramp D-1

FLOW RESULTS (cfs)			PONDING WIDTH (ft)	=	2.79
Flow from Catchment	=	1.76	DEPTH AT CURB (ft)	=	0.18
Carryover from previous inlet	=	0.00	EFFICIENCY (%)		
Total flow to current inlet	=	1.76	Curb = 100.00		
Intercepted by current inlet	=	1.76	Grate = *	Total =	100.00
Bypassed by current inlet	=	0.00	Slot = *		

INPUT PARAMETERS:

Inlet Type	= CURB IN SAG		Longitudinal Slope (ft/ft)	=	0.000
Gutter Width (ft)	=	2.000	Pavement Cross Slope (ft/ft)	=	0.018
Inlet n-value	=	0.016	Normal Gutter XSlope (ft/ft)	=	0.083
Downstream Inlet number	=	0	Gutter depression (in)	=	0.00
Curb Throat Type	= Horizontal				
Inlet Opening Ht (in)	=	4.00			
Curb Opening Lgth (ft)	=	10.00			
Curb Weir Coeff.	=	2.300			
Curb Orifice Coeff.	=	0.670			
Incline Angle (deg)	=	90.00			

C.B. @ 16+95 Lt - Ramp ES (# 138)

From Sverdrup Drainage Report,

say Q_{10} = 1.14 cfs.

S_L = Sump S_X = 0.0326'/ft

$d = (.067 - .0326) \times 2.5 \times 12 \frac{''}{ft} = 1.03$ in.

Use 30' + 10' slotted drain to pick up water in 'flat' gutter area.

Σ = 40 L.F. Slotted Drain

$d_{Act} = 0.05'$

BRW

JOB SR 153 SHEET NO.

MADE BY gag DATE 12/7/93 JOB NO.

CHECKED BY LM DATE 12/22/93 SEC. SHT. NO.

CALCULATIONS FOR Q_{10} - 16+95 Lt - Ramp ES F-95

STORM SEWER HEC 12 SINGLE INLET REPORT

C.B. # 138
16+95 Lt - Ramp ES

FLOW RESULTS (cfs)

Flow from Catchment	=	1.14	PONDING WIDTH (ft)	= 0.00
Carryover from previous inlet	=	0.00	DEPTH AT CURB (ft)	= 0.05
Total flow to current inlet	=	1.14	EFFICIENCY (%)	
Intercepted by current inlet	=	1.14	Curb = *	
Bypassed by current inlet	=	0.00	Grate = *	Total = 100.00
			Slot = 100.00	

INPUT PARAMETERS:

Inlet Type	= SLOTTED IN SAG	Longitudinal Slope (ft/ft)	= 0.000
Gutter Width (ft)	= 2.500	Pavement Cross Slope (ft/ft)	= 0.033
Inlet n-value	= 0.016	Normal Gutter XSlope (ft/ft)	= 0.067
Downstream Inlet number	= 0	Gutter depression (in)	= 0.00
Slot Length (ft)	= 40.00		
Slot Width (in)	= 1.75		
Curb Weir Coeff.	= 2.300		
Curb Orifice Coeff.	= 0.670		
Trans. Orifice Coeff.	= 0.670		

CB @ 18+30 Rt - Ramp ES (# 139)

$A = (2250 - 1805) \times \frac{32' + 46}{2} \div 43{,}560 = 0.40$ Ac

$Q = 0.40 \times 4.085 = 1.63$ cfs

@ 18+30, $S_x = 0.01'/ft$ S_L = Sump

$d_{max} = \frac{2''}{12} + 5.5 \times 0.01 = 0.22'$

$L = 10'$

Use 10' south & 20' north due to flat gutter slope.

Use 30' slotted drain

$d_{Act} = 0.08'$

JOB SR 153		SHEET NO.	
MADE BY gag	DATE 12/7/93	JOB NO.	
CHECKED BY LM	DATE 12/22/93	SEC. SHT. NO.	
CALCULATIONS FOR Q_{10} - 18+30 Rt - Ramp ES			F-97

C.B. # 139
18+30 Rt Ramp ES


```
FLOW RESULTS (cfs)                          PONDING WIDTH (ft)        =   0.00
  Flow from Catchment            =   1.63   DEPTH AT CURB (ft)        =   0.08
  Carryover from previous inlet  =   0.00   EFFICIENCY (%)
  Total flow to current inlet    =   1.63     Curb  =      *
  Intercepted by current inlet   =   1.63     Grate =      *    Total = 100.00
  Bypassed by current inlet      =   0.00     Slot  = 100.00

INPUT PARAMETERS:
 Inlet Type          = SLOTTED IN SAG  Longitudinal Slope (ft/ft)   =  0.000
 Gutter Width (ft)          =  2.500   Pavement Cross Slope (ft/ft) =  0.010
 Inlet n-value              =  0.016   Normal Gutter XSlope (ft/ft) =  0.067
 Downstream Inlet number    =      0   Gutter depression (in)      =  0.00
 Slot Length (ft)       =  30.00
 Slot Width (in)        =   1.75
 Curb Weir Coeff.       =  2.300
 Curb Orifice Coeff.    =  0.670
 Trans. Orifice Coeff.  =  0.670
```

CB @ 22+50 Rt - Ramp ES

$A = (2755 - 2462) \times 25' + (2462 - 2250) \frac{25 + 32}{2}$

$\div 43,560 = 0.31$ Ac.

$Q = 0.31 \times 4.085 = 1.27$ cfs.

w/20' slotted drain, @ 22+72,

$S_X = 0.06'/ft \quad S_L = 3.2\%$

$d = (.067 - .06) \times 30 = 0.21$ in.

Use 20' slotted drain

BRW

JOB SR 153 SHEET NO.

MADE BY gog DATE 12/7/93 JOB NO.

CHECKED BY LM DATE 12/22/93 SEC. SHT. NO.

CALCULATIONS FOR Q_{10} - 22+50 Rt - Ramp ES F-99

****
***** ROADWAY DRAINAGE DESIGN *****
****

DESIGNER: GAG

DATE: 12-07-1993

PROJECT: SR 153

PROJECT NO.:

INLET NO.: 140

STATION: 22+50'ES' RT

DRAINAGE AREA: .31 Acres

DESIGN FREQUENCY: 10 Years

ROADWAY & DISCHARGE DATA

Cross-Slope	S (ft/ft)	Sx (ft/ft)	n	Q (cfs)	T (ft)
Composite	0.032	0.060	0.016	1.27	3.03

GUTTER FLOW

W (ft)	Sw (ft/ft)	a (in)	Eo	d (ft)	V (fps)
2.50	0.067	0.21	0.991	0.20	4.26

INLET INTERCEPTION

Inlet Type	LT (ft)	L (ft)	E	Qi (cfs)	Qb (cfs)
Slotted Drain	14.30	0.00	0.000	0.00	1.27

F-100

Check Spread @ 120+82 (32+35' ES')

Ramp ES

$$A = \underbrace{(2865 - 2755) \times 24.84 + (54 \times 45)}_{5162\ ft^2}$$

$$+ (12398 - 12082) \times \frac{98+85}{2} \div 43{,}560$$

$$= 0.78\ Ac$$

$Q = 0.78 \times 4.085 = 3.2$ cfs

$S_x = 0.02'/ft$ $S_L = 0.5\%$ $d = 1.41$ in.

$T = 11.66' > 8'$ N.G.

CB. @ 121+98 Lt - SB 153 (31+20' ES')

$$A = 5162\ ft^2 + (12398 - 12198) \times \frac{98+91}{2} \div 43{,}560$$

$$= 0.55\ Ac.$$

$Q = 0.55 \times 4.085 = 2.25$ cfs

w/ 20' slotted drain, check spread @ 30+98' ES';

$S_x = 0.02'/ft$ $d = 1.41$ in $S_L = 1.6\%$

$T = 7.41' < 8'$ OK.

Use 20 L.F. Slotted Drain

BRW
MINNEAPOLIS PHOENIX

JOB SR 153 SHEET NO.
MADE BY gag DATE 12/16/93 JOB NO.
CHECKED BY LM DATE 12/22/93 SEC. SHT. NO.
CALCULATIONS FOR Q_{10} - 31+20 Rt - Ramp ES

```
*****************************************
*****     ROADWAY DRAINAGE DESIGN     *****
*****************************************
```

DESIGNER: GAG

DATE: 12-16-1993

PROJECT: SR 153

PROJECT NO.:

INLET NO.:

STATION: 31+20'ES' RT

DRAINAGE AREA: .55 Acres

DESIGN FREQUENCY: 10 Years

ROADWAY & DISCHARGE DATA

Cross-Slope	S (ft/ft)	Sx (ft/ft)	n	Q (cfs)	T (ft)
Composite	0.016	0.020	0.016	2.25	7.41

GUTTER FLOW

W (ft)	Sw (ft/ft)	a (in)	Eo	d (ft)	V (fps)
2.50	0.067	1.41	0.797	0.27	3.22

INLET INTERCEPTION

Inlet Type	LT (ft)	L (ft)	E	Qi (cfs)	Qb (cfs)
Slotted Drain	16.18	0.00	0.000	0.00	2.25

F-102

CB @ 13+50 Lt - Ramp NW

$$Area = (1289 - 672)\left(\frac{17 + 77'}{2}\right) + (105' \times 75')$$

$$\div 43{,}560 = 0.85 \text{ Ac.}$$

$$Q = 0.85 \times 0.60 \times 4.3 = 2.19 \text{ cfs.}$$

landscaping.

Use Off-road CB.

BRW

JOB SR 153 SHEET NO.

MADE BY gag DATE 12/16/93 JOB NO.

CHECKED BY LM DATE 12/22/93 SEC. SHT. NO.

CALCULATIONS FOR Q_{10} - 13+50 Lt - Ramp NW

F-103

Check Spread @ 12+10 Lt - Ramp N.W

$A = (1210 - 672) \times 25' \div 43{,}560 = 0.31\ Ac.$

$Q = 0.31 \times 4.085 = 1.27\ cfs.$

$S_x = 0.02'/ft \qquad S_L = 4.82\%$

$d = (.067 - .02) \times 30 = 1.41\ in.$

$T = 3.34' < 8'$ OK.

CB @ 14+08 Lt - Ramp NW C.B. #137

$A = (1408 - 672) \times 25' + 13{,}125\ ft^2 \div 43{,}560$

$= 0.72\ Ac$

$Q = 0.72 \times 4.085 = 2.94\ cfs.$

$S_x = 0.06'/ft \qquad S_L = Sump.$

$d_{allowable} = \frac{2''}{12} + 5.5' \times 0.06 = 0.5'$

$L_{req'd} = 10'$ Use 10' each way

= 20' slotted drain

$d_{Act} = 0.16'$

BRW
MINNEAPOLIS PHOENIX

JOB SR 153 SHEET NO.
MADE BY gag DATE 12/16/93 JOB NO.
CHECKED BY LM DATE 12/22/93 SEC. SHT. NO.
CALCULATIONS FOR Q10 - 14+08 Lt - Ramp NW

CB # 137
14+08 Lt - Ramp NW


```
FLOW RESULTS (cfs)                          PONDING WIDTH (ft)        =  0.00
  Flow from Catchment            =   2.94   DEPTH AT CURB (ft)        =  0.16
  Carryover from previous inlet  =   0.00   EFFICIENCY (%)
  Total flow to current inlet    =   2.94     Curb  =      *
  Intercepted by current inlet   =   2.94     Grate =      *    Total = 100.00
  Bypassed by current inlet      =   0.00     Slot  = 100.00

INPUT PARAMETERS:
 Inlet Type          = SLOTTED IN SAG  Longitudinal Slope (ft/ft)   =  0.000
 Gutter Width (ft)           =  2.500  Pavement Cross Slope (ft/ft) =  0.060
 Inlet n-value               =  0.016  Normal Gutter XSlope (ft/ft) =  0.067
 Downstream Inlet number     =      0  Gutter depression (in)       =  0.00
 Slot Length (ft)       =  20.00
 Slot Width (in)        =   1.75
 Curb Weir Coeff.       =  2.300
 Curb Orifice Coeff.    =  0.670
 Trans. Orifice Coeff.  =  0.670
```

F-105

Point	Sta.	Long. Grade %	Inc (Ac) Area	(4.085 x Area) Inc Q
WS1	105+59	.0137	.00805	0.033
WS2	105+49	.0341	.01341	0.055
WS3	104+60	.2157	0.11936	0.488
WS4	104+50	.2361	.01341	0.055
WS5	104+40	.2565	.01341	0.055
WS6	104+18	.3014	.02951	0.121
WS7	104+08	.3218	.01341	0.055
WS8	103+98	.3422	.01341	0.055
WS9	103+10	.5217	.11802	0.482
WS10	103+00	.5421	.01341	0.055
WS11	102+90	.5625	.01341	0.055
WS12	102+68	.6074	.02951	0.121
WS13	102+58	.6278	.01341	0.055
WS14	102+48	.6482	.01341	0.055
WS15	101+60	.8277	.11802	0.482
WS16	101+50	.8481	.01341	0.055
WS17	101+40	.8481	.01341	0.055
WS18	101+19	.8481	.02816	0.115
WS19	101+09	.8481	.01341	0.055
WS20	100+99	.8481	.01341	0.055

BRW

JOB SR 153 SHEET NO.

MADE BY gag DATE 1/19/94 JOB NO.

CHECKED BY DJS DATE 1/19/94 SEC. SHT. NO. 1/5

CALCULATIONS FOR Salt River Bridge Drains F-106

Point	Sta	Long. Grade %	Inc Area	(4.085 x Area) Inc Q
WS 21	100+07	.8481	.12338	0.504
WS 22	99+97	.8481	.01341	0.055
WS 23	99+87	.8481	.01341	0.055
WN 1	105+69	.0067	.005365	0.022
WN 2	105+90	.0495	.02816	0.115
WN 3	106+00	.0699	.01341	0.055
WN 4	106+10	.0903	.01341	0.055
WN 5	107+00	.2739	.12070	0.493
WN 6	107+10	.2943	.01341	0.055
WN 7	107+20	.3147	.01341	0.055
WN 8	107+40	.3555	.02682	0.110
WN 9	107+50	.3760	.01341	0.055
WN 10	107+60	.3964	.01341	0.055
WN 11	108+50	.5800	.12070	0.493
WN 12	108+60	.6004	.01341	0.055
WN 13	108+70	.6208	.01341	0.055
WN 14	108+90	.6616	.02682	0.110
WN 15	109+00	.6820	.01341	0.055
WN 16	109+10	.7024	.01341	0.055
WN 17	109+98	.8819	.11802	0.482

BRW

JOB SR 153 SHEET NO.

MADE BY gag DATE 1/19/94 JOB NO.

CHECKED BY DJS DATE 1/19/94 SEC. SHT. NO. 2/5

CALCULATIONS FOR Salt River Bridge Drains F-107

Point	Sta	Long. Grade %	Inc. Area	(4.085 x Area) Inc. Q
WN 18	110+08	.9023	.01341	0.055
WN 19	110+18	.9227	.01341	0.055
WN 20	110+41	.9696	.03085	0.126
WN 21	110+51	.9900	.01354	0.055
WN 22	110+61	1.0104	.01354	0.055
WN 23	111+49	1.1899	.12323	0.503
WN 24	111+59	1.2103	.01418	0.058
WN 25	111+69	1.2307	.01418	0.058
WN 26	111+92	1.2777	.03274	0.134
WN 27	112+02	1.2981	.01435	0.059
WN 28	112+12	1.3185	.01435	0.059
WN 29	112+69	1.4348	.08178	0.334
WN 30	112+79	1.4552	.01481	0.060
WN 31	112+89	1.4756	.01481	0.060

BRW

JOB SR 153 SHEET NO.

MADE BY gaj DATE 1/19/94 JOB NO.

CHECKED BY DJS DATE 1/19/94 SEC. SHT. NO. 3/5

CALCULATIONS FOR Salt River Bridge Drains F-108

Q's assuming 50% Clogging on Salt River Bridge

Inlet	Q_{Runoff}	Q_{Bypass}	Q_{TOTAL}	$Q_{Intercept}$	Q_{Bypass} ① ②
WS 1	0.033	—	0.033	0.0	0.033
2	0.055	0.033	0.088	0.048	0.04
3	0.488	0.04	0.528	0.0	0.528
4	0.055	0.528	0.583	0.243	0.34
WS 5	0.055	0.34	0.395	0.0	0.395
6	0.121	0.395	0.516	0.226	0.29
7	0.055	0.29	0.345	0.0	0.345
8	0.055	0.345	0.40	0.20	0.20
9	0.482	0.20	0.682	0.0	0.682
WS 10	0.055	0.682	0.737	0.317	0.42
11	0.055	0.42	0.475	0.0	0.475
12	0.121	0.475	0.596	0.276	0.32
13	0.055	0.32	0.375	0.0	0.375
14	0.055	0.375	0.43	0.23	0.20
WS 15	0.482	0.20	0.682	0.0	0.682
16	0.055	0.682	0.737	0.337	0.40
17	0.055	0.40	0.455	0.0	0.455
18	0.115	.455	0.57	0.29	0.28
19	0.055	0.28	0.335	0.0	0.335
WS 20	0.055	0.335	0.39	0.22	0.17

BRW

JOB SR 153 SHEET NO.

MADE BY gag DATE 1/19/94 JOB NO.

CHECKED BY DJS DATE 1/19/94 SEC. SHT. NO. 4/5

CALCULATIONS FOR Salt River Bridge Drains F-109

Inlet	Q_{Runoff}	Q_{Bypass}	Q_{Total}	$Q_{Intercept}$	Q_{Bypass}
WS 21	0.504	0.17	0.674	0.0	0.674
22	0.055	0.674	0.729	0.339	0.39
23	0.055	0.39	0.445	0.0	0.445 ②

① BYPASS FLOWS DETERMINED FROM ATTACHED CATCH BASIN CAPTURE CALCULATIONS. FOR EXAMPLE

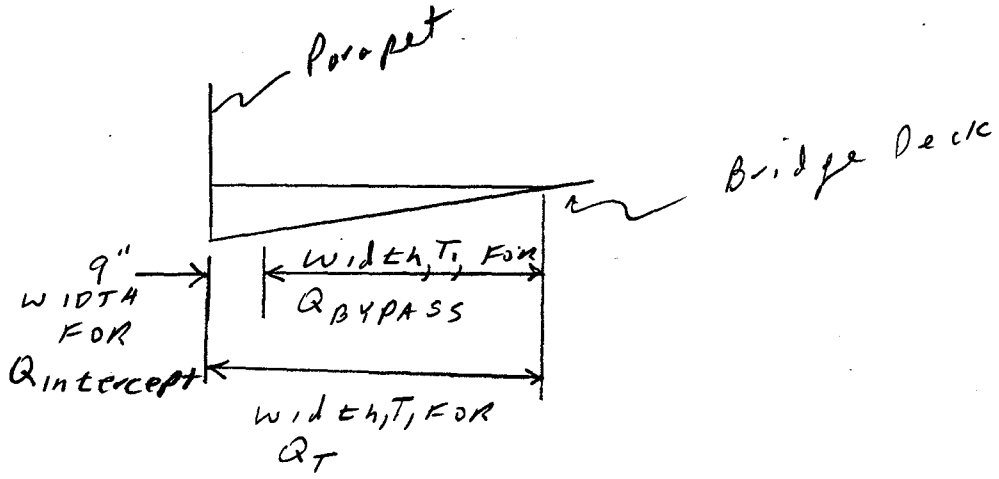

WS 2

$T = 3.05'$ FOR $Q_T = 0.088$ cfs

$Q_{Bypass} = 0.04$ cfs FOR $T = (3.05 - .75) = 2.30'$

$Q_{Intercept} = 0.088 - 0.04 = 0.048$ cfs

② Flows off South and north end of Bridge Deck

BRW

JOB SR 153 SHEET NO.
MADE BY gag DATE 1/19/94 JOB NO.
CHECKED BY DJS DATE 1/19/94 SEC. SHT. NO. 5/5
CALCULATIONS FOR Salt River Bridge Drains F-116

```
*****************************************
*****    ROADWAY DRAINAGE DESIGN    *****
*****************************************
```

DESIGNER: GAG

DATE: 01-01-1994

PROJECT: SR 153

PROJECT NO.:

INLET NO.: WS2

STATION: 105+49

DRAINAGE AREA: Acres

DESIGN FREQUENCY: 10 Years

ROADWAY & DISCHARGE DATA

Cross-Slope	S (ft/ft)	Sx (ft/ft)	n	Q (cfs)	T (ft)
Uniform	0.000	0.051	0.016	0.08	3.05

GUTTER FLOW

W (ft)	Sw (ft/ft)	a (in)	Eo	d (ft)	V (fps)
10.00	0.051	0.00	1.000	0.16	0.03

```
*****************************************
*****     ROADWAY DRAINAGE DESIGN     *****
*****************************************
```

DESIGNER: GAG

DATE: 01-01-1994

PROJECT: SR 153

PROJECT NO.:

INLET NO.: WS2

STATION: 105+49

DRAINAGE AREA: Acres

DESIGN FREQUENCY: 10 Years

ROADWAY & DISCHARGE DATA

Cross-Slope	S (ft/ft)	Sx (ft/ft)	n	Q (cfs)	T (ft)
Uniform	0.000	0.051	0.016	0.04	2.30

GUTTER FLOW

W (ft)	Sw (ft/ft)	a (in)	Eo	d (ft)	V (fps)
10.00	0.051	0.00	1.000	0.12	0.01

****
***** ROADWAY DRAINAGE DESIGN *****
****

DESIGNER: GAG

DATE: 01-01-1994

PROJECT: SR 153

PROJECT NO.:

INLET NO.: WS4

STATION: 104+50

DRAINAGE AREA: Acres

DESIGN FREQUENCY: 10 Years

ROADWAY & DISCHARGE DATA

Cross-Slope	S (ft/ft)	Sx (ft/ft)	n	Q (cfs)	T (ft)
Uniform	0.002	0.051	0.016	0.58	4.29

GUTTER FLOW

W (ft)	Sw (ft/ft)	a (in)	Eo	d (ft)	V (fps)
10.00	0.051	0.00	1.000	0.22	0.22

****
***** ROADWAY DRAINAGE DESIGN *****
****

DESIGNER: GAG

DATE: 01-01-1994

PROJECT: SR 153

PROJECT NO.:

INLET NO.: WS4

STATION: 104+50

DRAINAGE AREA: Acres

DESIGN FREQUENCY: 10 Years

ROADWAY & DISCHARGE DATA

Cross-Slope	S (ft/ft)	Sx (ft/ft)	n	Q (cfs)	T (ft)
Uniform	0.002	0.051	0.016	0.34	3.54

GUTTER FLOW

W (ft)	Sw (ft/ft)	a (in)	Eo	d (ft)	V (fps)
10.00	0.051	0.00	0.500	0.18	0.13

****
***** ROADWAY DRAINAGE DESIGN *****
****

DESIGNER: GAG

DATE: 01-01-1994

PROJECT: SR 153

PROJECT NO.:

INLET NO.: WS6

STATION: 104+18

DRAINAGE AREA: Acres

DESIGN FREQUENCY: 10 Years

ROADWAY & DISCHARGE DATA

Cross-Slope	S (ft/ft)	Sx (ft/ft)	n	Q (cfs)	T (ft)
Uniform	0.003	0.051	0.016	0.51	3.92

GUTTER FLOW

W (ft)	Sw (ft/ft)	a (in)	Eo	d (ft)	V (fps)
10.00	0.051	0.00	1.000	0.20	0.20

```
*****************************************
*****    ROADWAY DRAINAGE DESIGN    *****
*****************************************
```

DESIGNER: GAG

DATE: 01-01-1994

PROJECT: SR 153

PROJECT NO.:

INLET NO.: WS6

STATION: 104+18

DRAINAGE AREA: Acres

DESIGN FREQUENCY: 10 Years

ROADWAY & DISCHARGE DATA

Cross-Slope	S (ft/ft)	Sx (ft/ft)	n	Q (cfs)	T (ft)
Uniform	0.003	0.051	0.016	0.29	3.17

GUTTER FLOW

W (ft)	Sw (ft/ft)	a (in)	Eo	d (ft)	V (fps)
10.00	0.051	0.00	1.000	0.16	0.11

```
*****************************************
*****    ROADWAY DRAINAGE DESIGN    *****
*****************************************
```

DESIGNER: GAG

DATE: 01-01-1994

PROJECT: SR 153

PROJECT NO.:

INLET NO.: WS8

STATION: 103+98

DRAINAGE AREA: Acres

DESIGN FREQUENCY: 10 Years

ROADWAY & DISCHARGE DATA

Cross-Slope	S (ft/ft)	Sx (ft/ft)	n	Q (cfs)	T (ft)
Uniform	0.003	0.051	0.016	0.39	3.48

GUTTER FLOW

W (ft)	Sw (ft/ft)	a (in)	Eo	d (ft)	V (fps)
10.00	0.051	0.00	1.000	0.18	0.15

```
*****************************************
*****    ROADWAY DRAINAGE DESIGN    *****
*****************************************
```

DESIGNER: GAG

DATE: 01-01-1994

PROJECT: SR 153

PROJECT NO.:

INLET NO.: WS8

STATION: 103+98

DRAINAGE AREA: Acres

DESIGN FREQUENCY: 10 Years

ROADWAY & DISCHARGE DATA

Cross-Slope	S (ft/ft)	Sx (ft/ft)	n	Q (cfs)	T (ft)
Uniform	0.003	0.051	0.016	0.20	2.73

GUTTER FLOW

W (ft)	Sw (ft/ft)	a (in)	Eo	d (ft)	V (fps)
10.00	0.051	0.00	1.000	0.14	0.08

****
***** ROADWAY DRAINAGE DESIGN *****
****

DESIGNER: GAG

DATE: 01-01-1994

PROJECT: SR 153

PROJECT NO.:

INLET NO.: WS10

STATION: 103+00

DRAINAGE AREA: Acres

DESIGN FREQUENCY: 10 Years

ROADWAY & DISCHARGE DATA

Cross-Slope	S (ft/ft)	Sx (ft/ft)	n	Q (cfs)	T (ft)
Uniform	0.005	0.051	0.016	0.73	4.01

GUTTER FLOW

W (ft)	Sw (ft/ft)	a (in)	Eo	d (ft)	V (fps)
10.00	0.051	0.00	1.000	0.20	0.28

```
*****************************************
*****    ROADWAY DRAINAGE DESIGN    *****
*****************************************
```

DESIGNER: GAG

DATE: 01-01-1994

PROJECT: SR 153

PROJECT NO.:

INLET NO.: WS10

STATION: 103+00

DRAINAGE AREA: Acres

DESIGN FREQUENCY: 10 Years

ROADWAY & DISCHARGE DATA

Cross-Slope	S (ft/ft)	Sx (ft/ft)	n	Q (cfs)	T (ft)
Uniform	0.005	0.051	0.016	0.42	3.26

GUTTER FLOW

W (ft)	Sw (ft/ft)	a (in)	Eo	d (ft)	V (fps)
10.00	0.051	0.00	1.000	0.17	0.16

****
***** ROADWAY DRAINAGE DESIGN *****
****

DESIGNER: GAG

DATE: 01-01-1994

PROJECT: SR 153

PROJECT NO.:

INLET NO.: WS12

STATION: 102+68

DRAINAGE AREA: Acres

DESIGN FREQUENCY: 10 Years

ROADWAY & DISCHARGE DATA

Cross-Slope	S (ft/ft)	Sx (ft/ft)	n	Q (cfs)	T (ft)
Uniform	0.006	0.051	0.016	0.58	3.63

GUTTER FLOW

W (ft)	Sw (ft/ft)	a (in)	Eo	d (ft)	V (fps)
10.00	0.051	0.00	1.000	0.19	0.23

****
***** ROADWAY DRAINAGE DESIGN *****
****

DESIGNER: GAG

DATE: 01-01-1994

PROJECT: SR 153

PROJECT NO.:

INLET NO.: WS12

STATION: 102+68

DRAINAGE AREA: Acres

DESIGN FREQUENCY: 10 Years

ROADWAY & DISCHARGE DATA

Cross-Slope	S (ft/ft)	Sx (ft/ft)	n	Q (cfs)	T (ft)
Uniform	0.006	0.051	0.016	0.32	2.88

GUTTER FLOW

W (ft)	Sw (ft/ft)	a (in)	Eo	d (ft)	V (fps)
10.00	0.051	0.00	1.000	0.15	0.12

****
***** ROADWAY DRAINAGE DESIGN *****
****

DESIGNER: GAG

DATE: 01-01-1994

PROJECT: SR 153

PROJECT NO.:

INLET NO.: WS14

STATION: 102+48

DRAINAGE AREA: Acres

DESIGN FREQUENCY: 10 Years

ROADWAY & DISCHARGE DATA

Cross-Slope	S (ft/ft)	Sx (ft/ft)	n	Q (cfs)	T (ft)
Uniform	0.006	0.051	0.016	0.43	3.17

GUTTER FLOW

W (ft)	Sw (ft/ft)	a (in)	Eo	d (ft)	V (fps)
10.00	0.051	0.00	1.000	0.16	0.16

```
****************************************
*****    ROADWAY DRAINAGE DESIGN    *****
****************************************
```

DESIGNER: GAG

DATE: 01-01-1994

PROJECT: SR 153

PROJECT NO.:

INLET NO.: WS14

STATION: 102+48

DRAINAGE AREA: Acres

DESIGN FREQUENCY: 10 Years

ROADWAY & DISCHARGE DATA

Cross-Slope	S (ft/ft)	Sx (ft/ft)	n	Q (cfs)	T (ft)
Uniform	0.006	0.051	0.016	0.20	2.42

GUTTER FLOW

W (ft)	Sw (ft/ft)	a (in)	Eo	d (ft)	V (fps)
10.00	0.051	0.00	1.000	0.12	0.08

****
***** ROADWAY DRAINAGE DESIGN *****
****

DESIGNER: GAG

DATE: 01-01-1994

PROJECT: SR 153

PROJECT NO.:

INLET NO.: WS16

STATION: 101+50

DRAINAGE AREA: Acres

DESIGN FREQUENCY: 10 Years

ROADWAY & DISCHARGE DATA

Cross-Slope	S (ft/ft)	Sx (ft/ft)	n	Q (cfs)	T (ft)
Uniform	0.008	0.051	0.016	0.73	3.69

GUTTER FLOW

W (ft)	Sw (ft/ft)	a (in)	Eo	d (ft)	V (fps)
10.00	0.051	0.00	1.000	0.19	0.28

F-125

****
***** ROADWAY DRAINAGE DESIGN *****
****

DESIGNER: GAG

DATE: 01-01-1994

PROJECT: SR 153

PROJECT NO.:

INLET NO.: WS16

STATION: 101+50

DRAINAGE AREA: Acres

DESIGN FREQUENCY: 10 Years

ROADWAY & DISCHARGE DATA

Cross-Slope	S (ft/ft)	Sx (ft/ft)	n	Q (cfs)	T (ft)
Uniform	0.008	0.051	0.016	0.40	2.94

GUTTER FLOW

W (ft)	Sw (ft/ft)	a (in)	Eo	d (ft)	V (fps)
10.00	0.051	0.00	1.000	0.15	0.15

```
*****************************************
*****    ROADWAY DRAINAGE DESIGN    *****
*****************************************
```

DESIGNER: GAG

DATE: 01-01-1994

PROJECT: SR 153

PROJECT NO.:

INLET NO.: WS18

STATION: 101+19

DRAINAGE AREA: Acres

DESIGN FREQUENCY: 10 Years

ROADWAY & DISCHARGE DATA

Cross-Slope	S (ft/ft)	Sx (ft/ft)	n	Q (cfs)	T (ft)
Uniform	0.008	0.051	0.016	0.57	3.35

GUTTER FLOW

W (ft)	Sw (ft/ft)	a (in)	Eo	d (ft)	V (fps)
10.00	0.051	0.00	1.000	0.17	0.22

****
***** ROADWAY DRAINAGE DESIGN *****
****

DESIGNER: GAG

DATE: 01-01-1994

PROJECT: SR 153

PROJECT NO.:

INLET NO.: WS18

STATION: 101+19

DRAINAGE AREA: Acres

DESIGN FREQUENCY: 10 Years

ROADWAY & DISCHARGE DATA

Cross-Slope	S (ft/ft)	Sx (ft/ft)	n	Q (cfs)	T (ft)
Uniform	0.008	0.051	0.016	0.28	2.60

GUTTER FLOW

W (ft)	Sw (ft/ft)	a (in)	Eo	d (ft)	V (fps)
10.00	0.051	0.00	1.000	0.13	0.11

F-128

****
***** ROADWAY DRAINAGE DESIGN *****
****

DESIGNER: GAG

DATE: 01-01-1994

PROJECT: SR 153

PROJECT NO.:

INLET NO.: WS20

STATION: 100+99

DRAINAGE AREA: Acres

DESIGN FREQUENCY: 10 Years

ROADWAY & DISCHARGE DATA

Cross-Slope	S (ft/ft)	Sx (ft/ft)	n	Q (cfs)	T (ft)
Uniform	0.008	0.051	0.016	0.38	2.90

GUTTER FLOW

W (ft)	Sw (ft/ft)	a (in)	Eo	d (ft)	V (fps)
10.00	0.051	0.00	1.000	0.15	0.15

****
***** ROADWAY DRAINAGE DESIGN *****
****

DESIGNER: GAG

DATE: 01-01-1994

PROJECT: SR 153

PROJECT NO.:

INLET NO.: WS20

STATION: 100+99

DRAINAGE AREA: Acres

DESIGN FREQUENCY: 10 Years

ROADWAY & DISCHARGE DATA

Cross-Slope	S (ft/ft)	Sx (ft/ft)	n	Q (cfs)	T (ft)
Uniform	0.008	0.051	0.016	0.17	2.15

GUTTER FLOW

W (ft)	Sw (ft/ft)	a (in)	Eo	d (ft)	V (fps)
10.00	0.051	0.00	1.000	0.11	0.06

****
***** ROADWAY DRAINAGE DESIGN *****
****

DESIGNER: GAG

DATE: 01-01-1994

PROJECT: SR 153

PROJECT NO.:

INLET NO.: WS22

STATION: 99+97

DRAINAGE AREA: Acres

DESIGN FREQUENCY: 10 Years

ROADWAY & DISCHARGE DATA

Cross-Slope	S (ft/ft)	Sx (ft/ft)	n	Q (cfs)	T (ft)
Uniform	0.008	0.051	0.016	0.72	3.67

GUTTER FLOW

W (ft)	Sw (ft/ft)	a (in)	Eo	d (ft)	V (fps)
10.00	0.051	0.00	1.000	0.19	0.28

****
***** ROADWAY DRAINAGE DESIGN *****
****

DESIGNER: GAG

DATE: 01-01-1994

PROJECT: SR 153

PROJECT NO.:

INLET NO.: WS22

STATION: 99+97

DRAINAGE AREA: Acres

DESIGN FREQUENCY: 10 Years

ROADWAY & DISCHARGE DATA

Cross-Slope	S (ft/ft)	Sx (ft/ft)	n	Q (cfs)	T (ft)
Uniform	0.008	0.051	0.016	0.39	2.92

GUTTER FLOW

W (ft)	Sw (ft/ft)	a (in)	Eo	d (ft)	V (fps)
10.00	0.051	0.00	1.000	0.15	0.15

Q's assuming 50% Clogging on Salt River Bridge

Inlet	Q_{Runoff}	Q_{Bypass}	Q_{Total}	$Q_{Intercept}$	Q_{Bypass}
WN1	0.022	—	0.022	0.0	0.022
2	0.115	0.022	0.137	0.077	0.06
3	0.055	0.06	0.115	0.0	0.115
4	0.055	0.115	0.17	0.09	0.08
WN 5	0.493	0.08	0.573	0.0	0.573
6	0.055	0.573	0.628	0.258	0.37
7	0.055	0.37	0.425	0.0	0.425
8	0.110	0.425	0.535	0.245	0.29
9	0.055	0.29	0.345	0.0	0.345
WN 10	0.055	0.345	0.40	0.20	0.20
11	0.493	0.20	0.693	0.0	0.693
12	0.055	0.693	0.748	0.328	0.42
13	0.055	0.42	0.475	0.0	0.475
14	0.110	0.475	0.585	0.285	0.30
WN 15	0.055	0.30	0.355	0.0	0.355
16	0.055	0.355	0.41	0.22	0.19
17	0.482	0.19	0.672	0.0	0.672
18	0.055	0.672	0.727	0.337	0.39
19	0.055	0.39	0.445	0.0	0.445
WN 20	0.126	0.445	0.571	0.291	0.28

BRW

JOB SR 153 SHEET NO.

MADE BY gag DATE 1/19/94 JOB NO.

CHECKED BY DJS DATE 1/21/94 SEC. SHT. NO.

CALCULATIONS FOR Salt River Bridge Drains F-133

Inlet	Q_{Runoff}	Q_{Bypass}	Q_{Total}	$Q_{Intercept}$	Q_{Bypass}
WN 21	0.055	0.28	0.335	0.0	0.335
22	0.055	0.335	0.39	0.23	0.16
23	0.503	0.16	0.663	0.0	0.663
24	0.058	0.663	0.721	0.351	0.37
WN 25	0.058	0.37	0.428	0.0	0.428
26	0.134	0.428	0.562	0.302	0.26
27	0.059	0.26	0.319	0.0	0.319
28	0.059	0.319	0.378	0.228	0.15
29	0.334	0.15	0.484	0.0	0.484
WN 30	0.060	0.484	0.544	0.304	0.24
31	0.060	0.24	0.30	0.0	0.30

BRW

JOB SR 153 SHEET NO.

MADE BY gag DATE 1/19/94 JOB NO.

CHECKED BY DD DATE 1/21/94 SEC. SHT. NO.

CALCULATIONS FOR Salt River Bridge Drains F-13

****
***** ROADWAY DRAINAGE DESIGN *****
****

DESIGNER: GAG

DATE: 01-01-1994

PROJECT: SR 153

PROJECT NO.:

INLET NO.: WN2

STATION: 105+90

DRAINAGE AREA: Acres

DESIGN FREQUENCY: 10 Years

ROADWAY & DISCHARGE DATA

Cross-Slope	S (ft/ft)	Sx (ft/ft)	n	Q (cfs)	T (ft)
Uniform	0.000	0.051	0.016	0.13	3.34

GUTTER FLOW

W (ft)	Sw (ft/ft)	a (in)	Eo	d (ft)	V (fps)
10.00	0.051	0.00	1.000	0.17	0.05

```
*****************************************
*****    ROADWAY DRAINAGE DESIGN    *****
*****************************************
```

DESIGNER: GAG

DATE: 01-01-1994

PROJECT: SR 153

PROJECT NO.:

INLET NO.: WN2

STATION: 105+90

DRAINAGE AREA: Acres

DESIGN FREQUENCY: 10 Years

ROADWAY & DISCHARGE DATA

Cross-Slope	S (ft/ft)	Sx (ft/ft)	n	Q (cfs)	T (ft)
Uniform	0.000	0.051	0.016	0.06	2.59

GUTTER FLOW

W (ft)	Sw (ft/ft)	a (in)	Eo	d (ft)	V (fps)
10.00	0.051	0.00	1.000	0.13	0.02

****
***** ROADWAY DRAINAGE DESIGN *****
****

DESIGNER: GAG

DATE: 01-01-1994

PROJECT: SR 153

PROJECT NO.:

INLET NO.: WN4

STATION: 106+10

DRAINAGE AREA: Acres

DESIGN FREQUENCY: 10 Years

ROADWAY & DISCHARGE DATA

Cross-Slope	S (ft/ft)	Sx (ft/ft)	n	Q (cfs)	T (ft)
Uniform	0.001	0.051	0.016	0.16	3.24

GUTTER FLOW

W (ft)	Sw (ft/ft)	a (in)	Eo	d (ft)	V (fps)
10.00	0.051	0.00	1.000	0.17	0.06

```
*****************************************
*****    ROADWAY DRAINAGE DESIGN    *****
*****************************************
```

DESIGNER: GAG

DATE: 01-01-1994

PROJECT: SR 153

PROJECT NO.:

INLET NO.: WN4

STATION: 106+10

DRAINAGE AREA: Acres

DESIGN FREQUENCY: 10 Years

ROADWAY & DISCHARGE DATA

Cross-Slope	S (ft/ft)	Sx (ft/ft)	n	Q (cfs)	T (ft)
Uniform	0.001	0.051	0.016	0.08	2.49

GUTTER FLOW

W (ft)	Sw (ft/ft)	a (in)	Eo	d (ft)	V (fps)
10.00	0.051	0.00	1.000	0.13	0.03

****
***** ROADWAY DRAINAGE DESIGN *****
****

DESIGNER: GAG

DATE: 01-01-1994

PROJECT: SR 153

PROJECT NO.:

INLET NO.: WN6

STATION: 107+10

DRAINAGE AREA: Acres

DESIGN FREQUENCY: 10 Years

ROADWAY & DISCHARGE DATA

Cross-Slope	S (ft/ft)	Sx (ft/ft)	n	Q (cfs)	T (ft)
Uniform	0.003	0.051	0.016	0.62	4.23

GUTTER FLOW

W* (ft)	Sw (ft/ft)	a (in)	Eo	d (ft)	V (fps)
10.00	0.051	0.00	1.000	0.22	0.24

****
***** ROADWAY DRAINAGE DESIGN *****
****

DESIGNER: GAG

DATE: 01-01-1994

PROJECT: SR 153

PROJECT NO.:

INLET NO.: WN6

STATION: 107+10

DRAINAGE AREA: Acres

DESIGN FREQUENCY: 10 Years

ROADWAY & DISCHARGE DATA

Cross-Slope	S (ft/ft)	Sx (ft/ft)	n	Q (cfs)	T (ft)
Uniform	0.003	0.051	0.016	0.37	3.48

GUTTER FLOW

W (ft)	Sw (ft/ft)	a (in)	Eo	d (ft)	V (fps)
10.00	0.051	0.00	1.000	0.18	0.14

F-140

****
***** ROADWAY DRAINAGE DESIGN *****
****

DESIGNER: GAG

DATE: 01-01-1994

PROJECT: SR 153

PROJECT NO.:

INLET NO.: WN8

STATION: 107+40

DRAINAGE AREA: Acres

DESIGN FREQUENCY: 10 Years

ROADWAY & DISCHARGE DATA

Cross-Slope	S (ft/ft)	Sx (ft/ft)	n	Q (cfs)	T (ft)
Uniform	0.004	0.051	0.016	0.52	3.85

GUTTER FLOW

W (ft)	Sw (ft/ft)	a (in)	Eo	d (ft)	V (fps)
10.00	0.051	0.00	1.000	0.20	0.20

```
*****************************************
*****    ROADWAY DRAINAGE DESIGN    *****
*****************************************
```

DESIGNER: GAG

DATE: 01-01-1994

PROJECT: SR 153

PROJECT NO.:

INLET NO.: WN8

STATION: 107+40

DRAINAGE AREA: Acres

DESIGN FREQUENCY: 10 Years

ROADWAY & DISCHARGE DATA

Cross-Slope	S (ft/ft)	Sx (ft/ft)	n	Q (cfs)	T (ft)
Uniform	0.004	0.051	0.016	0.29	3.10

GUTTER FLOW

W (ft)	Sw (ft/ft)	a (in)	Eo	d (ft)	V (fps)
10.00	0.051	0.00	1.000	0.16	0.11

****
***** ROADWAY DRAINAGE DESIGN *****
****

DESIGNER: GAG

DATE: 01-01-1994

PROJECT: SR 153

PROJECT NO.:

INLET NO.: WN10

STATION: 107+60

DRAINAGE AREA: Acres

DESIGN FREQUENCY: 10 Years

ROADWAY & DISCHARGE DATA

Cross-Slope	S (ft/ft)	Sx (ft/ft)	n	Q (cfs)	T (ft).
Uniform	0.004	0.051	0.016	0.40	3.38

GUTTER FLOW

W (ft)	Sw (ft/ft)	a (in)	Eo	d (ft)	V (fps)
10.00	0.051	0.00	1.000	0.17	0.15

****
***** ROADWAY DRAINAGE DESIGN *****
****

DESIGNER: GAG

DATE: 01-01-1994

PROJECT: SR 153

PROJECT NO.:

INLET NO.: WN10

STATION: 107+60

DRAINAGE AREA: Acres

DESIGN FREQUENCY: 10 Years

ROADWAY & DISCHARGE DATA

Cross-Slope	S (ft/ft)	Sx (ft/ft)	n	Q (cfs)	T (ft)
Uniform	0.004	0.051	0.016	0.20	2.63

GUTTER FLOW

W (ft)	Sw (ft/ft)	a (in)	Eo	d (ft)	V (fps)
10.00	0.051	0.00	1.000	0.13	0.07

F-144

****
***** ROADWAY DRAINAGE DESIGN *****
****

DESIGNER: GAG

DATE: 01-01-1994

PROJECT: SR 153

PROJECT NO.:

INLET NO.: WN12

STATION: 108+60

DRAINAGE AREA: Acres

DESIGN FREQUENCY: 10 Years

ROADWAY & DISCHARGE DATA

Cross-Slope	S (ft/ft)	Sx (ft/ft)	n	Q (cfs)	T (ft)
Uniform	0.006	0.051	0.016	0.74	3.96

GUTTER FLOW

W (ft)	Sw (ft/ft)	a (in)	Eo	d (ft)	V (fps)
10.00	0.051	0.00	1.000	0.20	0.29

F-145

```
*****************************************
*****     ROADWAY DRAINAGE DESIGN     *****
*****************************************
```

DESIGNER: GAG

DATE: 01-01-1994

PROJECT: SR 153

PROJECT NO.:

INLET NO.: WN12

STATION: 108+60

DRAINAGE AREA: Acres

DESIGN FREQUENCY: 10 Years

ROADWAY & DISCHARGE DATA

Cross-Slope	S (ft/ft)	Sx (ft/ft)	n	Q (cfs)	T (ft)
Uniform	0.006	0.051	0.016	0.42	3.21

GUTTER FLOW

W (ft)	Sw (ft/ft)	a (in)	Eo	d (ft)	V (fps)
10.00	0.051	0.00	1.000	0.16	0.16

F-146

```
*****************************************
*****    ROADWAY DRAINAGE DESIGN    *****
*****************************************
```

DESIGNER: GAG

DATE: 01-01-1994

PROJECT: SR 153

PROJECT NO.:

INLET NO.: WN14

STATION: 108+90

DRAINAGE AREA: Acres

DESIGN FREQUENCY: 10 Years

ROADWAY & DISCHARGE DATA

Cross-Slope	S (ft/ft)	Sx (ft/ft)	n	Q (cfs)	T (ft)
Uniform	0.007	0.051	0.016	0.58	3.54

GUTTER FLOW

W (ft)	Sw (ft/ft)	a (in)	Eo	d (ft)	V (fps)
10.00	0.051	0.00	1.000	0.18	0.22

F-147

****
***** ROADWAY DRAINAGE DESIGN *****
****

DESIGNER: GAG

DATE: 01-01-1994

PROJECT: SR 153

PROJECT NO.:

INLET NO.: WN14

STATION: 108+90

DRAINAGE AREA: Acres

DESIGN FREQUENCY: 10 Years

ROADWAY & DISCHARGE DATA

Cross-Slope	S (ft/ft)	Sx (ft/ft)	n	Q (cfs)	T (ft)
Uniform	0.007	0.051	0.016	0.30	2.79

GUTTER FLOW

W (ft)	Sw (ft/ft)	a (in)	Eo	d (ft)	V (fps)
10.00	0.051	0.00	1.000	0.14	0.12

F-148

****
***** ROADWAY DRAINAGE DESIGN *****
****

DESIGNER: GAG

DATE: 01-01-1994

PROJECT: SR 153

PROJECT NO.:

INLET NO.: WN16

STATION: 109+10

DRAINAGE AREA: Acres

DESIGN FREQUENCY: 10 Years

ROADWAY & DISCHARGE DATA

Cross-Slope	S (ft/ft)	Sx (ft/ft)	n	Q (cfs)	T (ft)
Uniform	0.007	0.051	0.016	0.40	3.07

GUTTER FLOW

W (ft)	Sw (ft/ft)	a (in)	Eo	d (ft)	V (fps)
10.00	0.051	0.00	1.000	0.16	0.16

F-149

****
***** ROADWAY DRAINAGE DESIGN *****
****

DESIGNER: GAG

DATE: 01-01-1994

PROJECT: SR 153

PROJECT NO.:

INLET NO.: WN16

STATION: 109+10

DRAINAGE AREA: Acres

DESIGN FREQUENCY: 10 Years

ROADWAY & DISCHARGE DATA

Cross-Slope	S (ft/ft)	Sx (ft/ft)	n	Q (cfs)	T (ft)
Uniform	0.007	0.051	0.016	0.19	2.32

GUTTER FLOW

W (ft)	Sw (ft/ft)	a (in)	Eo	d (ft)	V (fps)
10.00	0.051	0.00	1.000	0.12	0.07

F-150

****
***** ROADWAY DRAINAGE DESIGN *****
****

DESIGNER: GAG

DATE: 01-01-1994

PROJECT: SR 153

PROJECT NO.:

INLET NO.: WN18

STATION: 110+08

DRAINAGE AREA: Acres

DESIGN FREQUENCY: 10 Years

ROADWAY & DISCHARGE DATA

Cross-Slope	S (ft/ft)	Sx (ft/ft)	n	Q (cfs)	T (ft)
Uniform	0.009	0.051	0.016	0.72	3.63

GUTTER FLOW

W (ft)	Sw (ft/ft)	å (in)	Eo	d (ft)	V (fps)
10.00	0.051	0.00	1.000	0.19	0.28

****
***** ROADWAY DRAINAGE DESIGN *****
****

DESIGNER: GAG

DATE: 01-01-1994

PROJECT: SR 153

PROJECT NO.:

INLET NO.: WN18

STATION: 110+08

DRAINAGE AREA: Acres

DESIGN FREQUENCY: 10 Years

ROADWAY & DISCHARGE DATA

Cross-Slope	S (ft/ft)	Sx (ft/ft)	n	Q (cfs)	T (ft)
Uniform	0.009	0.051	0.016	0.39	2.88

GUTTER FLOW

W (ft)	Sw (ft/ft)	a (in)	Eo	d (ft)	V (fps)
10.00	0.051	0.00	1.000	0.15	0.15

****
***** ROADWAY DRAINAGE DESIGN *****
****

DESIGNER: GAG

DATE: 01-01-1994

PROJECT: SR 153

PROJECT NO.:

INLET NO.: WN20

STATION: 110+41

DRAINAGE AREA: Acres

DESIGN FREQUENCY: 10 Years

ROADWAY & DISCHARGE DATA

Cross-Slope	S (ft/ft)	Sx (ft/ft)	n	Q (cfs)	T (ft)
Uniform	0.010	0.051	0.016	0.57	3.27

GUTTER FLOW

W (ft)	Sw (ft/ft)	a (in)	Eo	d (ft)	V (fps)
10.00	0.051	0.00	1.000	0.17	0.22

F-153

```
*****************************************
*****    ROADWAY DRAINAGE DESIGN    *****
*****************************************
```

DESIGNER: GAG

DATE: 01-01-1994

PROJECT: SR 153

PROJECT NO.:

INLET NO.: WN20

STATION: 110+41

DRAINAGE AREA: Acres

DESIGN FREQUENCY: 10 Years

ROADWAY & DISCHARGE DATA

Cross-Slope	S (ft/ft)	Sx (ft/ft)	n	Q (cfs)	T (ft)
Uniform	0.010	0.051	0.016	0.28	2.52

GUTTER FLOW

W (ft)	Sw (ft/ft)	a (in)	Eo	d (ft)	V (fps)
10.00	0.051	0.00	1.000	0.13	0.11

F-154

****
***** ROADWAY DRAINAGE DESIGN *****
****

DESIGNER: GAG

DATE: 01-01-1994

PROJECT: SR 153

PROJECT NO.:

INLET NO.: WN22

STATION: 110+61

DRAINAGE AREA: Acres

DESIGN FREQUENCY: 10 Years

ROADWAY & DISCHARGE DATA

Cross-Slope	S (ft/ft)	Sx (ft/ft)	n	Q (cfs)	T (ft)
Uniform	0.010	0.051	0.016	0.38	2.81

GUTTER FLOW

W (ft)	Sw (ft/ft)	a (in)	Eo	d (ft)	V (fps)
10.00	0.051	0.00	1.000	0.14	0.15

****
***** ROADWAY DRAINAGE DESIGN *****
****

DESIGNER: GAG

DATE: 01-01-1994

PROJECT: SR 153

PROJECT NO.:

INLET NO.: WN22

STATION: 110+61

DRAINAGE AREA: Acres

DESIGN FREQUENCY: 10 Years

ROADWAY & DISCHARGE DATA

Cross-Slope	S (ft/ft)	Sx (ft/ft)	n	Q (cfs)	T (ft)
Uniform	0.010	0.051	0.016	0.16	2.06

GUTTER FLOW

W (ft)	Sw (ft/ft)	a (in)	Eo	d (ft)	V (fps)
10.00	0.051	0.00	1.000	0.11	0.06

```
*****************************************
*****    ROADWAY DRAINAGE DESIGN    *****
*****************************************
```

DESIGNER: GAG

DATE: 01-01-1994

PROJECT: SR 153

PROJECT NO.:

INLET NO.: WN24

STATION: 111+59

DRAINAGE AREA: Acres

DESIGN FREQUENCY: 10 Years

ROADWAY & DISCHARGE DATA

Cross-Slope	S (ft/ft)	Sx (ft/ft)	n	Q (cfs)	T (ft)
Uniform	0.012	0.051	0.016	0.72	3.42

GUTTER FLOW

W (ft)	Sw (ft/ft)	a (in)	Eo	d (ft)	V (fps)
10.00	0.051	0.00	1.000	0.17	0.28

****
***** ROADWAY DRAINAGE DESIGN *****
****

DESIGNER: GAG

DATE: 01-01-1994

PROJECT: SR 153

PROJECT NO.:

INLET NO.: WN24

STATION: 111+59

DRAINAGE AREA: Acres

DESIGN FREQUENCY: 10 Years

ROADWAY & DISCHARGE DATA

Cross-Slope	S (ft/ft)	Sx (ft/ft)	n	Q (cfs)	T (ft)
Uniform	0.012	0.051	0.016	0.37	2.67

GUTTER FLOW

W (ft)	Sw (ft/ft)	a (in)	Eo	d (ft)	V (fps)
10.00	0.051	0.00	1.000	0.14	0.14

****
***** ROADWAY DRAINAGE DESIGN *****
****

DESIGNER: GAG

DATE: 01-01-1994

PROJECT: SR 153

PROJECT NO.:

INLET NO.: WN26

STATION: 111+92

DRAINAGE AREA: Acres

DESIGN FREQUENCY: 10 Years

ROADWAY & DISCHARGE DATA

Cross-Slope	S (ft/ft)	Sx (ft/ft)	n	Q (cfs)	T (ft)
Uniform	0.013	0.051	0.016	0.56	3.08

GUTTER FLOW

W (ft)	Sw (ft/ft)	a (in)	Eo	d (ft)	V (fps)
10.00	0.051	0.00	1.000	0.16	0.22

****
***** ROADWAY DRAINAGE DESIGN *****
****

DESIGNER: GAG

DATE: 01-01-1994

PROJECT: SR 153

PROJECT NO.:

INLET NO.: WN26

STATION: 111+92

DRAINAGE AREA: Acres

DESIGN FREQUENCY: 10 Years

ROADWAY & DISCHARGE DATA

Cross-Slope	S (ft/ft)	Sx (ft/ft)	n	Q (cfs)	T (ft)
Uniform	0.013	0.051	0.016	0.26	2.33

GUTTER FLOW

W (ft)	Sw (ft/ft)	a (in)	Eo	d (ft)	V (fps)
10.00	0.051	0.00	1.000	0.12	0.10

F-160

****
***** ROADWAY DRAINAGE DESIGN *****
****

DESIGNER: GAG

DATE: 01-01-1994

PROJECT: SR 153

PROJECT NO.:

INLET NO.: WN28

STATION: 112+12

DRAINAGE AREA: Acres

DESIGN FREQUENCY: 10 Years

ROADWAY & DISCHARGE DATA

Cross-Slope	S (ft/ft)	Sx (ft/ft)	n	Q (cfs)	T (ft)
Uniform	0.013	0.051	0.016	0.37	2.64

GUTTER FLOW

W (ft)	Sw (ft/ft)	a (in)	Eo	d (ft)	V (fps)
10.00	0.051	0.00	1.000	0.14	0.14

****
***** ROADWAY DRAINAGE DESIGN *****
****

DESIGNER: GAG

DATE: 01-01-1994

PROJECT: SR 153

PROJECT NO.:

INLET NO.: WN28

STATION: 112+12

DRAINAGE AREA: Acres

DESIGN FREQUENCY: 10 Years

ROADWAY & DISCHARGE DATA

Cross-Slope	S (ft/ft)	Sx (ft/ft)	n	Q (cfs)	T (ft)
Uniform	0.013	0.051	0.016	0.15	1.89

GUTTER FLOW

W (ft)	Sw (ft/ft)	a (in)	Eo	d (ft)	V (fps)
10.00	0.051	0.00	1.000	0.10	0.06

F-162

****
***** ROADWAY DRAINAGE DESIGN *****
****

DESIGNER: GAG

DATE: 01-01-1994

PROJECT: SR 153

PROJECT NO.:

INLET NO.: WN30

STATION: 112+79

DRAINAGE AREA: Acres

DESIGN FREQUENCY: 10 Years

ROADWAY & DISCHARGE DATA

Cross-Slope	S (ft/ft)	Sx (ft/ft)	n	Q (cfs)	T (ft)
Uniform	0.015	0.051	0.016	0.54	2.97

GUTTER FLOW

W (ft)	Sw (ft/ft)	a (in)	Eo	d (ft)	V (fps)
10.00	0.051	0.00	1.000	0.15	0.21

****
***** ROADWAY DRAINAGE DESIGN *****
****

DESIGNER: GAG

DATE: 01-01-1994

PROJECT: SR 153

PROJECT NO.:

INLET NO.: WN30

STATION: 112+79

DRAINAGE AREA: Acres

DESIGN FREQUENCY: 10 Years

ROADWAY & DISCHARGE DATA

Cross-Slope	S (ft/ft)	Sx (ft/ft)	n	Q (cfs)	T (ft)
Uniform	0.015	0.051	0.016	0.24	2.22

GUTTER FLOW

W (ft)	Sw (ft/ft)	a (in)	Eo	d (ft)	V (fps)
10.00	0.051	0.00	1.000	0.11	0.09

F-164

Embankment Spillway @ 14+00 Ramp WS

B/C - B/C = 1.5(2) + 8' + 14 = 25'

Drainage Area = (1400 - 350) x 25' ÷ 43,560

= 0.60 Ac.

Q_{10} = 0.60 x 4.085 = 2.46 cfs

S_L = 0.0041'/ft S_X = 0.0778'/ft

d = 0.0 in (S_X > Normal gutter slope)

BRW

JOB SR 153 SHEET NO.

MADE BY gag DATE 4/5/94 JOB NO.

CHECKED BY [illegible] DATE 4/7/94 SEC. SHT. NO. F-165

CALCULATIONS FOR Spillway - Sta 14+00 Ramp WS

```
*****************************************
*****    ROADWAY DRAINAGE DESIGN    *****
*****************************************
```

DESIGNER: GAG

DATE: 04-04-1994

PROJECT: SR 153

PROJECT NO.:

INLET NO.:

STATION: 14+00'WS'

DRAINAGE AREA: .6 Acres

DESIGN FREQUENCY: 10 Years

ROADWAY & DISCHARGE DATA

Cross-Slope	S (ft/ft)	Sx (ft/ft)	n	Q (cfs)	T (ft)
Composite	0.004	0.078	0.016	2.46	5.10

GUTTER FLOW

W (ft)	Sw (ft/ft)	a (in)	Eo	d (ft)	V (fps)
2.50	0.077	0.00	0.833	0.40	2.42

INLET INTERCEPTION

Inlet Type	LT (ft)	W (ft)	E	Qi (cfs)	Qb (cfs)
Curb-Opening	9.36	0.00	0.000	0.00	2.46

Embankment Spillway @ 15+13 Ramp WS

15+13 is sump.

Area = (1700 - 1400) x 25' ÷ 43,560 = 0.18 Ac.

Q = 0.18 x 4.085 = 0.74 cfs

S_L = 0.00 ′/ft S_X = 0.077 ′/ft

d = 0.0 in (S_X > Normal gutter)

Since Spillway @ 14+00 takes all water @ Q_{50}, this spillway is OK. @ Q_{50}

BRW

JOB SR 153 SHEET NO.

MADE BY gag DATE 4/5/94 JOB NO.

CHECKED BY DD DATE 4/7/94 SEC. SHT. NO. F-167

CALCULATIONS FOR Spillway - Sta 15+13 Ramp WS

CB 143

Determine Runoff Volume for area enclosed by Ramp A, Sky Harbor EB and Sky Harbor W.B.

$A = 38{,}500\ ft^2 = 0.88\ Ac.$

$CA = 0.70 \times 0.88 = 0.62$

$P_{24} = 3.9$

Volume $= 0.62 \times 3.9 \div 12 = 0.20$ Ac. Ft

@ Elev. 1116, Bottom Area = 410 ft^2

@ Elev 1118, Top Area = 1215 ft^2

Volume of Retention Basin w/ top @ 1118

$$= \frac{410 + 1215}{2(43{,}560)} \times 2' = 0.04 \text{ Acre-ft}$$

@ Elev 1119, Top Area = 2360

Volume of Retention Basin w/top @ 1119

$$= \frac{410 + 1215}{2(43{,}560)} \times 2' + \frac{1215 + 2360}{2(43{,}560)} \times 1' = 0.08 \text{ Ac. Ft.}$$

∴ Use off-road Type 4 C.B. Single.

$Q_{10} = 0.88 \times 4.085 = 3.6$ cfs

$Q_{50} = 3.6 \times 6.2/4.3 = 5.2$ cfs.

BRW

JOB SR 153 SHEET NO.

MADE BY gag DATE 3/18/94 JOB NO.

CHECKED BY LM DATE 4/11/94 SEC. SHT. NO.

CALCULATIONS FOR CB 143

Check Q_{50} @ CB 104 (13+48.42 Ramp D-1)

$Q_{10} = 1.76$ cfs

$Q_{50} = 1.76 \times \frac{6.2}{4.3} = 2.54$ cfs.

Allowable $d = 0.27'$

Curb opening provided = 10.08'

w/ 20% clogging, $L = 10.08 \times 0.8 = 8' \pm$

From Chart 13, w/ $L = 8$ & $Q = 2.54$,

$d = 0.27'$ or Elev $28.96 - 2'' + 0.27'$

$= 29.06$ OK.

BRW

JOB SR 153 SHEET NO.

MADE BY gag DATE 4/6/94 JOB NO.

CHECKED BY DDD DATE 4/7/94 SEC. SHT. NO.

CALCULATIONS FOR Q_{50} Check - CB 104 F-169

Check Q_{50} @ CB 105 (13+55 Ramp D)

Q_{10} Summary

CB 105 3.45 cfs

106 (16+35) 1.14 cfs

$\Sigma Q_{10} = 4.59$ cfs

Assume $Q_{50} > Q_{10}$ bypasses to sump.

$Q_{50} = 4.59 \times \frac{6.2}{4.3} - 1.14 = 5.5$ cfs.

w/ 20' slotted drain and Q = 5.5 cfs,

d act = 0.31' < 0.36 OK.

w/ 12' spread, d = 2" + 9.5 (.02) = 0.36

BRW

JOB 5R 153 SHEET NO.

MADE BY gaa DATE 4/6/94 JOB NO.

CHECKED BY DAD DATE 4/7/94 SEC. SHT. NO.

CALCULATIONS FOR Q50 check - CB 105 F-170

Check Q_{50} @ CB 108 (19+80 Ramp D)

$Q_{10} = 0.76$ cfs

$Q_{50} = 0.76 \times \frac{6.2}{4.3} = 1.1$ cfs.

w/ 20' slotted drain, d = 0.1' OK.

BRW

JOB SR 153 SHEET NO.

MADE BY gag DATE 4/6/94 JOB NO.

CHECKED BY DJD DATE 4/7/94 SEC. SHT. NO.

CALCULATIONS FOR Q_{50} check - CB 108 F-171

Check Q_{50} @ 110 (22+22 Ramp D)

$Q_{10} = 1.02$ cfs

$Q_{50} = 1.02 \times \frac{6.2}{4.3} = 1.47$ cfs.

w/ 20' slotted drain, $d = 0.13'$ ok.

BRW

JOB SR 153 SHEET NO.

MADE BY gag DATE 4/6/94 JOB NO.

CHECKED BY DJ DATE 4/9/94 SEC. SHT. NO.

CALCULATIONS FOR Q50 Check - CB 110 F-172

Check Q_{50} @ CB 114 (Sump) (27+00 Rt)
Ramp D

Total Q_{10}

Bridge 3.17 cfs

CB 120 (95+00 Median) 2.94 cfs

118 (89+45 Median) 3.15 cfs

116 (84+00 Rt) 3.55 cfs

114 (27+00 Rt - Ramp D) 6.60 cfs.

Future CB @ 62+95 Rt 0.62 cfs

Future CB @ 68+75 Rt 3.92 cfs

Future CB @ 72+32 Median 2.25 cfs

CB 111 (75+09 Median) 1.59 cfs

113 (77+05 Rt) 1.06 cfs

$\Sigma Q_{10} = 28.85$ cfs

Assume all $Q_{50} > Q_{10}$ bypasses to sump.

$$Q_{50} = 28.85 \times \frac{6.2}{4.3} - (28.85 - 6.60)$$
$$= 41.6 - 22.3$$
$$= 19.3 \text{ cfs}$$

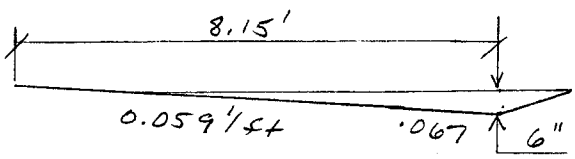

$d = (.067 - .059) \times 2.5 \times 12$
$= 0.24''$

w/ Q = 19.3 cfs & 20' slotted drain, depth = 1.06'

w/ 30' slotted drain, depth = 0.47', OK.
w/ 40' slotted drain, depth = 0.38'
Use 30' slotted drain {10' SW, 20' NE}

BRW

JOB SR 153 SHEET NO.
MADE BY gag DATE 4/6/94 JOB NO.
CHECKED BY DJS DATE 4/9/94 SEC. SHT. NO.
CALCULATIONS FOR Q_{50} check @ CB 114 F-173

STORM SEWER HEC 12 SINGLE INLET REPORT

FLOW RESULTS (cfs)		PONDING WIDTH (ft)	= 0.00
Flow from Catchment	= 19.30	DEPTH AT CURB (ft)	= 1.06
Carryover from previous inlet	= 0.00	EFFICIENCY (%)	
Total flow to current inlet	= 19.30	Curb = *	
Intercepted by current inlet	= 19.30	Grate = *	Total = 100.00
Bypassed by current inlet	= 0.00	Slot = 100.00	

INPUT PARAMETERS:

Inlet Type	= SLOTTED IN SAG	Longitudinal Slope (ft/ft)	= 0.000
Gutter Width (ft)	= 2.500	Pavement Cross Slope (ft/ft)	= 0.059
Inlet n-value	= 0.016	Normal Gutter XSlope (ft/ft)	= 0.067
Downstream Inlet number	= 0	Gutter depression (in)	= 0.24
Slot Length (ft)	= 20.00		
Slot Width (in)	= 1.75		
Curb Weir Coeff.	= 2.300		
Curb Orifice Coeff.	= 0.670		
Trans. Orifice Coeff.	= 0.670		

STORM SEWER HEC 12 SINGLE INLET REPORT

FLOW RESULTS (cfs)		PONDING WIDTH (ft)	= 0.00
Flow from Catchment	= 19.30	DEPTH AT CURB (ft)	= 0.47
Carryover from previous inlet	= 0.00	EFFICIENCY (%)	
Total flow to current inlet	= 19.30	Curb = *	
Intercepted by current inlet	= 19.30	Grate = *	Total = 100.00
Bypassed by current inlet	= 0.00	Slot = 100.00	

INPUT PARAMETERS:

Inlet Type	= SLOTTED IN SAG	Longitudinal Slope (ft/ft)	= 0.000
Gutter Width (ft)	= 2.500	Pavement Cross Slope (ft/ft)	= 0.059
Inlet n-value	= 0.016	Normal Gutter XSlope (ft/ft)	= 0.067
Downstream Inlet number	= 0	Gutter depression (in)	= 0.24
Slot Length (ft)	= 30.00		
Slot Width (in)	= 1.75		
Curb Weir Coeff.	= 2.300		
Curb Orifice Coeff.	= 0.670		
Trans. Orifice Coeff.	= 0.670		

STORM SEWER HEC 12 SINGLE INLET REPORT

FLOW RESULTS (cfs)		PONDING WIDTH (ft)	= 0.00
Flow from Catchment	= 19.30	DEPTH AT CURB (ft)	= 0.38
Carryover from previous inlet	= 0.00	EFFICIENCY (%)	
Total flow to current inlet	= 19.30	Curb = *	
Intercepted by current inlet	= 19.30	Grate = *	Total = 100.00
Bypassed by current inlet	= 0.00	Slot = 100.00	

INPUT PARAMETERS:

Inlet Type	= SLOTTED IN SAG	Longitudinal Slope (ft/ft)	= 0.000
Gutter Width (ft)	= 2.500	Pavement Cross Slope (ft/ft)	= 0.059
Inlet n-value	= 0.016	Normal Gutter XSlope (ft/ft)	= 0.067
Downstream Inlet number	= 0	Gutter depression (in)	= 0.24
Slot Length (ft)	= 40.00		
Slot Width (in)	= 1.75		
Curb Weir Coeff.	= 2.300		
Curb Orifice Coeff.	= 0.670		
Trans. Orifice Coeff.	= 0.670		

Check Q_{50} @ CB 115 (Sump)

Intensity

Q_{10} $i = 4.3$

Q_{50} $i = 6.2$

Total Q_{10}

Bridge	3.17 cfs
CB 121 (95+00 Lt)	2.74 cfs
119 (89+45 Lt)	3.06 cfs
117 (86+45 Lt)	1.63 cfs
115 (78+35 Median)	6.41 cfs
ΣQ_{10} =	17.01 cfs

@ 78+35, $S_L = 0.00$ $S_X = 0.058'/ft$

Total slotted drain = 20'

Assume all $Q_{50} > Q_{10}$ bypasses to sump.

$\therefore Q_{50}$ @ sump $= 17.01 \times \frac{6.2}{4.3} - (17.01 - 6.41)$

$= 24.5 - 10.6 = 13.9$ cfs.

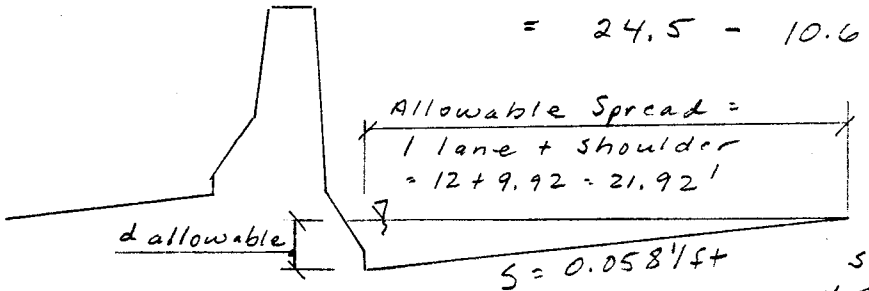

$d_{allow} = 21.92 \times 0.058$
$= 1.27'$

From chart, w/ 20' slotted drain, $d \approx 0.6' < 1.27'$ OK.

By computer, $d = 0.55'$ ✓

BRW

JOB SR 153 SHEET NO.

MADE BY gag DATE 4/6/94 JOB NO.

CHECKED BY DJ DATE 4/9/94 SEC. SHT. NO.

CALCULATIONS FOR Q_{50} Check @ CB 115 F-177

STORM SEWER HEC 12 SINGLE INLET REPORT

```
FLOW RESULTS (cfs)                          PONDING WIDTH (ft)        =   0.00
  Flow from Catchment            =  13.90   DEPTH AT CURB (ft)        =   0.55
  Carryover from previous inlet =    0.00   EFFICIENCY (%)
  Total flow to current inlet    =  13.90     Curb  =      *
  Intercepted by current inlet   =  13.90     Grate =      *    Total = 100.00
  Bypassed by current inlet      =   0.00     Slot  = 100.00

INPUT PARAMETERS:
 Inlet Type          = SLOTTED IN SAG  Longitudinal Slope (ft/ft)   =  0.000
 Gutter Width (ft)           =  2.500  Pavement Cross Slope (ft/ft) =  0.058
 Inlet n-value               =  0.016  Normal Gutter XSlope (ft/ft) =  0.058
 Downstream Inlet number     =      0  Gutter depression (in)       =  0.00
 Slot Length (ft)       =  20.00
 Slot Width (in)        =   1.75
 Curb Weir Coeff.       =  2.300
 Curb Orifice Coeff.    =  0.670
 Trans. Orifice Coeff. =  0.670
```

Check Q_{50} @ CB 126

Total Q_{10}

Bridge		4.05 cfs
CB	122 (117+45 Lt)	2.94 cfs
	125 (119+00 Lt)	1.10 cfs
	126 (119+80 Lt)	2.37 cfs
	141 (31+20 'ES')	2.25 cfs
	129 (123+98)	1.92 cfs

$\Sigma Q_{10} = 14.63$ cfs

Assume all $Q_{50} > Q_{10}$ bypasses to sump.

$$Q_{50} = 14.63 \times \frac{6.2}{4.3} - (14.63 - 2.37)$$

$$= 21.1 - 12.3 = 8.8 \text{ cfs}$$

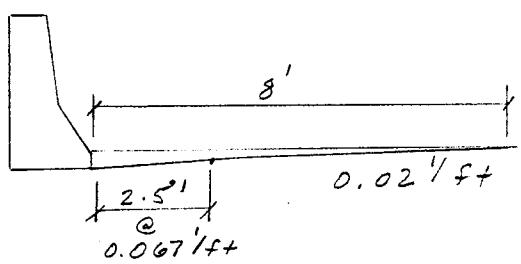

$d_{allowable} = 0.28'$

By computer, $d_{actual} = 1''$ OK

BRW

JOB SR 153 SHEET NO.

MADE BY gaw DATE 4/6/94 JOB NO.

CHECKED BY DJD DATE 4/9/94 SEC. SHT. NO.

CALCULATIONS FOR Q_{50} Check - CB 126 F-179

STORM SEWER HEC 12 SINGLE INLET REPORT

FLOW RESULTS (cfs)		PONDING WIDTH (ft)	= 0.00
Flow from Catchment	= 8.80	DEPTH AT CURB (ft)	= 0.08
Carryover from previous inlet	= 0.00	EFFICIENCY (%)	
Total flow to current inlet	= 8.80	Curb = *	
Intercepted by current inlet	= 8.80	Grate = *	Total = 100.00
Bypassed by current inlet	= 0.00	Slot = 100.00	

INPUT PARAMETERS:

Inlet Type	= SLOTTED IN SAG	Longitudinal Slope (ft/ft)	= 0.000
Gutter Width (ft)	= 2.500	Pavement Cross Slope (ft/ft)	= 0.020
Inlet n-value	= 0.016	Normal Gutter XSlope (ft/ft)	= 0.067
Downstream Inlet number	= 0	Gutter depression (in)	= 1.41
Slot Length (ft)	= 40.00		
Slot Width (in)	= 1.75		
Curb Weir Coeff.	= 2.300		
Curb Orifice Coeff.	= 0.670		
Trans. Orifice Coeff.	= 0.670		

Q_{50} Check @ CB 137 (sta 14+08 Ramp NW)

High Point on Sky Harbor WB @ 44+00±.

From Sverdrup Report,

Q_{10} for C.B's @:

sta 38+00 Rt (CB 219) $Q_{10} = 2.81$ cfs

sta 41+00 Rt (CB 221) $Q_{10} = 2.55$ cfs

Q_{10} for CB 137 = 2.94 cfs.

$\Sigma Q_{10} = 8.3$ cfs

CB 219 is currently a sump w/ no slotted drain. We have considered the grate opening as the clogging factor. ∴ assume CB 219 takes no water. . .

Assume all $Q_{50} > Q_{10}$ bypasses to sump.

$$Q_{50} = 8.3 \times \frac{6.2}{4.3} - 2.55 = 9.4 \text{ cfs.}$$

$S_x = 0.06$ '/ft $\quad d = (.067 - .06) \times 2.5 \times 12 = 0.21$ in.

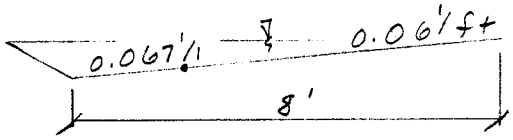

$d_{allow} = (8 - 2.5) \times 0.06 + 2'' = 0.5'$

w/ Q = 9.4 cfs & 20' slotted drain, d = 0.44' < 0.5'

O.K.

BRW

JOB SR 153 SHEET NO.

MADE BY gag DATE 4/6/94 JOB NO.

CHECKED BY DJS DATE 4/9/94 SEC. SHT. NO.

CALCULATIONS FOR Q_{50} Check for CB 137 F-181

Check Q_{50} @ CB 138 (16+95 Ramp ES)

$Q_{10} = 1.14$ cfs

$Q_{50} = 1.14 \times \frac{6.2}{4.3} = 1.64$ cfs

w/ 40' slotted drain, water will stay in gutter. ∴ OK

BRW

JOB SR 153 SHEET NO.

MADE BY gag DATE 4/6/94 JOB NO.

CHECKED BY DJB DATE 4/9/94 SEC. SHT. NO.

CALCULATIONS FOR Q_{50} check - CB 138 F-182

Check Q_{50} @ CB 139 (18+30 Ramp ES)

Q_{10} Summary

CB	140 (22+50)	1.27 cfs
	139 (18+30)	1.63 cfs
		$\Sigma Q_{10} =$ 2.9

Assume all $Q_{50} > Q_{10}$ bypasses to sump.

$$Q_{50} = 2.9 \times \frac{6.2}{4.3} - 1.27 = 2.9 \text{ cfs}$$

From chart, w/ Q = 2.9 cfs & 30' slotted drain, depth of water < 2" O.K.

BRW

JOB SR 153 SHEET NO.

MADE BY gas DATE 4/6/94 JOB NO.

CHECKED BY DJ DATE 4/9/94 SEC. SHT. NO.

CALCULATIONS FOR Q_{50} check - CB 139 F-183

Check Q_{50} @ 15+13 Ramp WS

Check Q_{50} @ 14+00.

$Q_{10} = 2.46$ cfs

$Q_{50} = 2.46 \times \frac{6.2}{4.3} = 3.55$ cfs

Length of curb opening req'd

@ 14+00 = 10.92' x 1.25 = 13.65'

Spillway opening = 13'

∴ most of Q_{50} will be captured.

w/ 13' opening & 20% clogging, bypass = 0.01 cfs

@ 15+13, Q_{10} = 0.74 cfs + 0.01 bypass $Q_{50} = 0.75 \times \frac{6.2}{4.3}$

= 1.1 cfs.

Since $S_x = 0.0778$, spread is O.K.

BRW

JOB SR 153 SHEET NO.

MADE BY gag DATE 4/6/94 JOB NO.

CHECKED BY SD DATE 4/9/94 SEC. SHT. NO.

CALCULATIONS FOR Q50 check - 15+13 Ramp WS F-184

Appendix G
Retention Basin Calculations

PROBLEM STATEMENT: Determine the 100-year 24-hour runoff volumes that will flow into Retention Basins No. 1, 2 and 3, and with those volumes determine the equalized water surface elevation within these basins.

RET BASIN NO	Runoff V (AC-FT)	Available Ret. Vol. @ 1114 (AC-FT)	Surface Area @ 1114 (S.F.)
1	1.76	2.907	40406
2	1.039	.418	7886
3	1.026	.932	20362
TOTAL	3.824	4.257	68654

$$\Delta W.S. \text{ From } 1114 = \frac{(4.257 - 3.824) \times 43560}{68654} = 0.27'$$

Equalized water level in Retention Basins is (1114 - .27) = 1113.73'.

See next page (1a) for final calculations.
4/1/94 D. Schaub

BRW

JOB SR 153 Drainage SHEET NO.
MADE BY D. Schaub DATE 4/19/94 JOB NO.
CHECKED BY G. Goetz DATE 4/19/94 SEC. SHT. NO. 1/7
CALCULATIONS FOR Retention Basin 1, 2 & 3

RET. BASIN NO.	Runoff ∀ (A-F)	AVAILABLE RET. ∀ @ 1112 msl	1114 msl
1	1.76	1.780	3.205
2	1.038	0.281	0.635
3	1.026	0.489	1.550
TOT.	3.824	2.550	5.390

- 100-YEAR Water Surface Elevation (Equalized)

$$W.S.\ ELEV. = 1112.0 + 2\left(\frac{3.824-2.550}{5.390-2.550}\right)$$

$$\boxed{W.S.\ (100\ YR) = 1112.90}$$

- Volume stored in Each basin @ 1112.90

Ret. Basin No. 1

$$\forall = 1.780 + \frac{.90}{2.00}(3.205 - 1.780) = 2.421\ A\text{-}F$$

Ret. Basin No. 2

$$\forall = 0.281 + \frac{.90}{2.00}(0.635 - 0.281) = 0.440\ A\text{-}F$$

Ret. Basin No. 3

$$\forall = 0.489 + \frac{.90}{2.00}(1.550 - 0.489) = 0.966\ A\text{-}F$$

TOT. 3.827 A-F

≃ 3.824 OK

BRW

Job SR 153 Drainage Sheet No.
Made By D. Schaub Date 4/11/94 Job No.
Checked By L. McIntosh Date 4/11/94 Sec. Sht. No. 1a/9
Calculations For Retention Basins 1, 2 & 3

Retention basin 1

- Storm sewer inflows

CB 52	$\Sigma CA = .857$ ac
CB 53	$\Sigma CA = 1.054$ ac
CB 27	$\Sigma CA = .629$ ac
CB 138	$\Sigma CA = .267$ ac
CB 139	$\Sigma CA = .380$ ac
CB 140	$\Sigma CA = .295$ ac

Total $\Sigma CA = 3.482$ ac

- Natural drainage area

upaved $= 121187\ ft^2 \frac{1}{43560} = 2.782$ acre

- ~~Retention basin area~~

~~Bottom area = 22905 ft² Elev 1110~~
~~Top area = 50800 ft² Elev 1116~~

~~Top area at elev 1114 = 40406 ft² Elev 1114~~

~~Vol = $\frac{(22905 + 40406)}{2(43560)}(4) = 2.907$ acre-ft~~

see sheet 7a For Final Retention vol

CALCS
4/1/94
D. Schaub

- Total volume in = 1.76 acre-ft

Available volume = ~~2.907~~ 3.205 − 1.76 = ~~1.147~~ 1.445 acre-ft @ msl 1114 W/o Inflow from other Basins

Inflow from other basins = (2.421 − 1.760) = 0.661 A-F (see sht 1a)

Available volume = 1.445 − 0.661 = 0.784 acre-ft @ msl 1114 W/ inflow from other Basins

Additional storage volume available after the 100-year storm event is 0.661 A-F.

4/1/94 D. Schaub
Chkd 4/1/94 L. McIntosh

BRW

JOB SR 153 Drainage SHEET NO.
MADE BY LM DATE 1/20/94 JOB NO.
CHECKED BY G. Goetz DATE 1/20/94 SEC. SHT. NO. 2/7
CALCULATIONS FOR Retention Basin 1,2 & 3 G-3

ARIZONA DEPARTMENT OF TRANSPORTATION

~~STORM SEWER RUNOFF~~ CALCULATION RECORD
Retention basin

LOCATION DATA

Highway SR 153

Location Retention Basin 1

Project No.

DESIGN DATA

Frequency _____ years

P_6= _____ in. P_{24}= 3.9 in. P_1= _____ in.

RUNOFF CALCULATIONS

Drainage Area			Pav't.			Comm.			Resid.			Decomposed Granite Slope							Tc	P_{24} ~~I~~ ~~in./hr.~~	Volume ~~Q~~ ~~cfs~~ acre-ft
No.	Station-Station	Acre	C	A	CA	C	A	CA	C	A	CA	C	A	CA	C	A	CA	Σ CA	min.		
52	From Sverdrup	.902	.95	.902	.857													.857		3.9	.279
53	From Sverdrup	1.109	.95	1.109	1.054													1.054		3.9	.343
27	From Sverdrup	.662	.95	.662	.629													.629		3.9	.204
138	From Sverdrup	.281	.95	.281	.267													.267		3.9	.087
139	18+05 to 22+50	.40	.95	.40	.380													.380		3.9	.124
140	22+50 to 27+55	.31	.95	.31	.295													.295		3.9	.096
	Basin area	2.782										.70	2.782	1.947				1.947		3.9	.633
	Total																	5.429			1.76

Computed by: LM Checked by: G. Goetz Date: 1/20/94

t ● 20-0404 12/74

G-4

Retention basin 2

- Storm sewer inflows

CB	32	ΣCA = .650 ac
CB	132	ΣCA = .219 ac
CB	142	ΣCA = .646 ac
CB	30	ΣCA = .466 ac

Total ΣCA = 1.981 ac

- Natural drainage area

unpaved = 75572 ft² $\frac{1}{43560}$ = 1.735ac

- ~~Retention basin area~~

~~Bottom area = 1211 ft² Elev 1110~~
~~Top area = 12197 ft² Elev 1116~~
~~Top area at elev 1114 = 7886 ft² Elev 1114~~

~~$Vol = \frac{(7886+1211)}{2(43560)}(4) = .418$ acre ft~~

See sheet 9a For Final Retention Volume CALCS 4/1/94 D.J. Schaub

- Total Inflow volume = 1.038 (see sht 1a)

Outflow ∀ = 1.038 − .440 = 0.598 A-F @ Equalized W.S. Elev = 1112.90

Available ∀ (w/outflow to other Basins) =

0.635 − 0.440 = 0.195 A-F

Additional storage volume available after the 100-year event is 0.195 AF.

4/1/94 D. Schaub
chkd 4/1/94 L. McIntosh

BRW

JOB SR 153 Drainage SHEET NO.
MADE BY LM DATE 1/20/94 JOB NO.
CHECKED BY G. Goetz DATE 1/20/94 SEC. SHT. NO. 4/7
CALCULATIONS FOR Retention Basin 1,2 & 3 G-5

ARIZONA DEPARTMENT OF TRANSPORTATION

STORM SEWER RUNOFF CALCULATION RECORD

LOCATION DATA

Highway SR 153

Location Retention basin 2

Project No.

DESIGN DATA

Frequency _____ years

P_6= _____ in. P_{24}= 3.9 in. P_1= _____ in.

RUNOFF CALCULATIONS

Drainage Area			Pav't.			Comm.			Resid.			Decomposed Granite Slope							Tc	P_{24} ~~I~~	Volume ~~Q~~
No.	Station-Station	Acre	C	A	CA	C	A	CA	C	A	CA	C	A	CA	C	A	CA	Σ CA	min.	in./hr.	~~cfs~~ acre-ft
32	From Sverdrup	.684	.95	.684	.650													.650		3.9	.211
30	From Sverdrup	.490	.95	.49	.466													.466		3.9	.151
37	From Sverdrup	.680	.95	.68	.646													.646		3.9	.210
132	4+58 to 6+66	.23	.95	.23	.218													.218		3.9	.071
	Basin Area	1.735										.70	1.735	1.25				1.215		3.9	.395
	Total																	3.195			1.038

Computed by: LM Checked by: G. Goetz Date: 1/20/94

5/1

C-6

† 20-0404 12/74

Retention basin 3

- Storm sewer inflows

CB 130 $\Sigma CA = .703$ ac
CB 131 $\Sigma CA = .741$ ac
Total $\Sigma CA = 1.444$ ac

- Natural drainage area

unpaved $A = 106919\ ft^2 \frac{1ac}{43560} = 2.45$ ac

- ~~Retention basin area~~

~~Bottom area = 6696 ft² Elev 1111~~
~~Top area = 20362 ft² Elev 1114~~

~~$Vol = \frac{(20362+6696)}{2} \frac{1}{43560} (3ft) = .932$ acre-ft~~

See sht 7a FOR FINAL RET. BASIN CALCS. 4/1/94 D. Schaub

- Inflow volume 1.026 acre-ft (see sht 1a)

OUTFLOW VOLUME = 1.026 A-F − .966 = 0.060 A-F.
@ Equalized W.S. El. = 1112.90

Available Volume (w/outflow to other Basins) =
1.550 − 0.966 = 0.584 A-F.

Additional storage volume available after the 100-year event is 0.584 A-F.

4/1/94 D. Schaub
Ckd 4/1/94 L. McIntosh

BRW

JOB SR 153 SHEET NO.
MADE BY Lm DATE 1/20/94 JOB NO.
CHECKED BY G. Goetz DATE 1/20/94 SEC. SHT. NO. 6/7
CALCULATIONS FOR Retention Basin 1,2 & 3 G-7

ARIZONA DEPARTMENT OF TRANSPORTATION

STORM SEWER RUNOFF CALCULATION RECORD

LOCATION DATA

Highway SR 153

Location Retention basin 3

Project No.

DESIGN DATA

Frequency 100 years

P_6= _____ in. P_{24}= 3.90 in. P_1= _____ in.

RUNOFF CALCULATIONS

Drainage Area			Pav't.			Comm.			Resid.			Decomposed Granite Slope							Tc	P_{24} ~~I~~	Volume ~~Q~~
No.	Station-Station	Acre	C	A	CA	C	A	CA	C	A	CA	C	A	CA	C	A	CA	Σ CA	min.	~~in./hr.~~	~~cfs~~ acre-ft
130	127+83 - 133+30 Rt	.74	.95	.74	.703													.703		3.90	.228
131	127+51 - 133+30 Lt	.78	.95	.78	.741													.741		3.90	.241
	Basin Area	2.45										.70	2.45	1.715				1.715		3.90	.557
	Totals																	3.159			1.026

Computed by: LM 1/20/94 Checked by: G. Goetz Date: 1/20/94

20-0404 12/74

PROBLEM STATEMENT: Determine stage-storage curves for Retention Basins NO. 1, 2, and 3.

STAGE msl	Δh FT	RET. BASIN #1 AREA S.F.	RET. BASIN #1 AV. S.F.	RET. BASIN #1 VOL. A-F	RET BASIN #2 AREA S.F.	RET BASIN #2 AV. S.F.	RET BASIN #2 VOL. A-F	RET. BASIN #3 AREA SF	RET. BASIN #3 AV S.F.	RET. BASIN #3 VOL. A-F	TOT. VOL. A-F	ACC VOL. A-F
1108		9704.			—			—				0
	1.0		12728.	0.292		—	—		—	—	.292	
1109		15752.			2482.			—				.292
	1.0		17707.	0.406		3016.	0.069		—	—	.475	
1110		19662. ①			3549. ①			1028.				.767
	2.0		23572.	1.082		4616.	0.212		10648.	0.489	1.783	
1112		27481.			5684.			20269.				2.550
	2.0		31044.	1.425		7714.	0.354		23109.	1.061	2.840	
1114		34608			9745.			25949.				5.390
TOT.				3.205			0.635			1.55	5.390	

① Prorated based on measured values at lower and higher stages.

BRW

Job SR 153 Drainage Sheet No.
Made By D. Schaub Date 3/31/94 Job No.
Checked By L. McIntosh Date 4/1/94 Sec. Sht. No. 7a/7
Calculations For Retention Basins 1, 2 & 3 G-9

PROBLEM STATEMENT: Determine the 100-year 24-hour runoff volume that will flow into Existing Retention Basin No. 6, and with that volume determine the 100-year water surface elevation in the Basin. Furthermore, Sky Harbor Airport has complained about the permanent pond created by the high water table and therefore, they have requested that the pond be filled with river rock to decrease the duration of open water during the year. The necessary fill elevation will be determined based on the current water level.

BRW

JOB SR 153 Drainage SHEET NO.
MADE BY D. Schaub DATE 4/4/94 JOB NO.
CHECKED BY G Goff DATE 4/5/94 SEC. SHT. NO. 1/9
CALCULATIONS FOR Retention Basin NO. 6 G-10

• Runoff Volume

ΣCA SR 153 = 16.33 (1) Acres

ΣCA Hohokam = 8.08 (1) Acres

ΣCA City of Phx = 0.39 (1) Acres

ΣCA Within Ramp "WS" Loop = 8.57 (2) Acres

ΣCA Ramp "WS" Pavement = 0.74 (2) Acres

Total CA = 34.11 Acres

(1) SOURCE: Final Storm Drainage Report and Calculations of Proposed Phoenix Urbanized Area, SR153, Segment BB, July 1990, Sverdrup Corp. See attached Sheet 3.

(2) SOURCE: measured from SR153 Plans, this project by BRW Inc. See attached Sheet 4

100-Year runoff volume

$V = 34.11 \text{ Acres} \times 3.9 \text{ inches} \left(\frac{1'}{12''}\right)$

$V = 11.09$ Acre-FT

BRW

JOB SR 153 Drainage SHEET NO.

MADE BY D. Schaub DATE 4/4/94 JOB NO.

CHECKED BY G Graf DATE 4/5/94 SEC. SHT. NO. 2/9

CALCULATIONS FOR Retention Basin NO. 6 G-11

SVERDRUP

JOB SR 153

SHEET NO. ____ OF ____

DATE 2/8/90

COMPUTATIONS FOR Retention on Hohokam + within SR 143 Loop ~~SW~~ WS

BY RJG CHKD

Retention Pond # 6

ΣCA SR 153 = 16.33 Ac

ΣCA Hohokam = 8.08

ΣCA within Loop SW = 6.18 + .394 City of Phx.

30.984

Total ΣCA = 30.59 Ac

100 yr. 24 hour Storm

$i_{100/24} = 3.90$ in.

$Vol_{100/24} = (30.59)(3.90)(43,560)(1/12) = 433,063 \text{ ft}^3$ → 30.984 → 438,640 ft³

$\approx 433,000$ cfs

Storage Capacity

Elev 1100 Area = 77,000 SF

Elev 1105.5 Area = 121,000 SF

$$Volume = \left(\frac{121,000 + 77,000}{2}\right)(5.5) = 544,500 \text{ ft}^3$$

$$depth = \left(\frac{433,063}{544,500}\right)(5.5) = 4.37' \quad 4.43'$$

Elev 1100 + 4.37 = 1104.37 → 1104.4 1104.43

3/9

~~A2.15~~

G-12

Drainage Area for Ramp "WS" Loop

Area inside Ramp WS, and Hohokam Expressway = 393,000 ft^2 = 9.02 Ac.

$CA = 9.02 \times \cancel{0.60}\ 0.95^{**} = \cancel{5.4}\ 8.57$

Area of Ramp WS (Sta 3+50 to 17+00)

= 1350' x 25' = 0.78 Ac.

CA = 0.78 x 0.95 = 0.74

** In recent years, this pond has not been dry due to a perched water table in combination with an unusually wet rain season. Therefore, it was assumed that 95% of the rainfall would flow into the basin and percolate very slowly into the soil.

BRW

JOB SR 153 Drainage SHEET NO.

MADE BY G. Goetz DATE 4/4/94 JOB NO.

CHECKED BY D. Schaub DATE 4/4/94 SEC. SHT. NO. 4/9

CALCULATIONS FOR Retention Basin NO. 6 G-13

• STAGE-VOLUME CALCULATIONS

	STAGE MSL	Δh ft	SURFACE AREA @ STAGE S.F.	SURFACE AREA AVE. S.F.	STORAGE VOL. INCR. A-F	STORAGE VOL. ACC. A-F
W.S. Level 1/93 →	1111.56		166,500. (1)			0
		2.00		177,566.	8.15	
	1113.56		188631. (3)			8.15
		0.44		191,066.	1.92	
	1114.00		193,500. (1)			10.07
W.S. Level 4/4/94 →	1106.54		128809. (2)			0
		5.02		147,655.	17.02	
	1111.56		166,500. (1)			17.02
		2.00		177,566.	8.15	
	1113.56 (4)		188631. (3)			25.17
		0.44		191,066.	1.93	
	1114.00		193,500 (1)			27.10
	1100.00		77,000. (3)			0
		5.5		99,000.	12.50	
	1105.5		121,000. (3)			12.50
		6.06		143,750.	20.00	
	1111.56		166,500. (1)			32.50
		2.00		177,566.	8.15	
	1113.56 (4)		188631. (2)			40.65
		0.44		191,066.	1.93	
	1114.00		193,500 (1)			42.58
					TOTAL	

(1) BRW measurement.
(2) Prorated value
(3) Sverdrup measurement
(4) C.B. 214 Grate Elevation, Sta 17+43 ℄ RAMP "EN", 14' LT, Constructed in 1990 with Sky Harbor Access Road (SR 153), RAM-601-0-5 153 MA 001

BRW

Job SR 153 Drainage Sheet No.
Made By D. Schaub Date 4/4/94 Job No.
Checked By G. Geef Date 4/5/94 Sec. Sht. No. 5/9
Calculations For Retention Basin No. 6

Field Survey to determine W.S. Elevation for Retention Basin No. 6 on 4/4/94.

Back of Gore Sta 17+15.80

P.G.L. = 1116.57 e = 0.058'/'

T/C = 1116.57 - 11.5(.058) - 2" + 6" = 1116.24

→ W.L. = 1116.24 - 9.7 = 1106.54

Pipe Inv = 1106.54 - 0.3 - 42" - 5¼" = 1102.3

Estimated water cover over pipe

Estimated Flow line Elevation. Note: Plan elevation is 1101.72.

BRW

JOB SR 153 Drainage SHEET NO.

MADE BY G Goetz DATE 4/4/94 JOB NO.

CHECKED BY D. Schaub DATE 4/4/94 SEC. SHT. NO. 6/9

CALCULATIONS FOR Retention Basin NO. 6 G-15

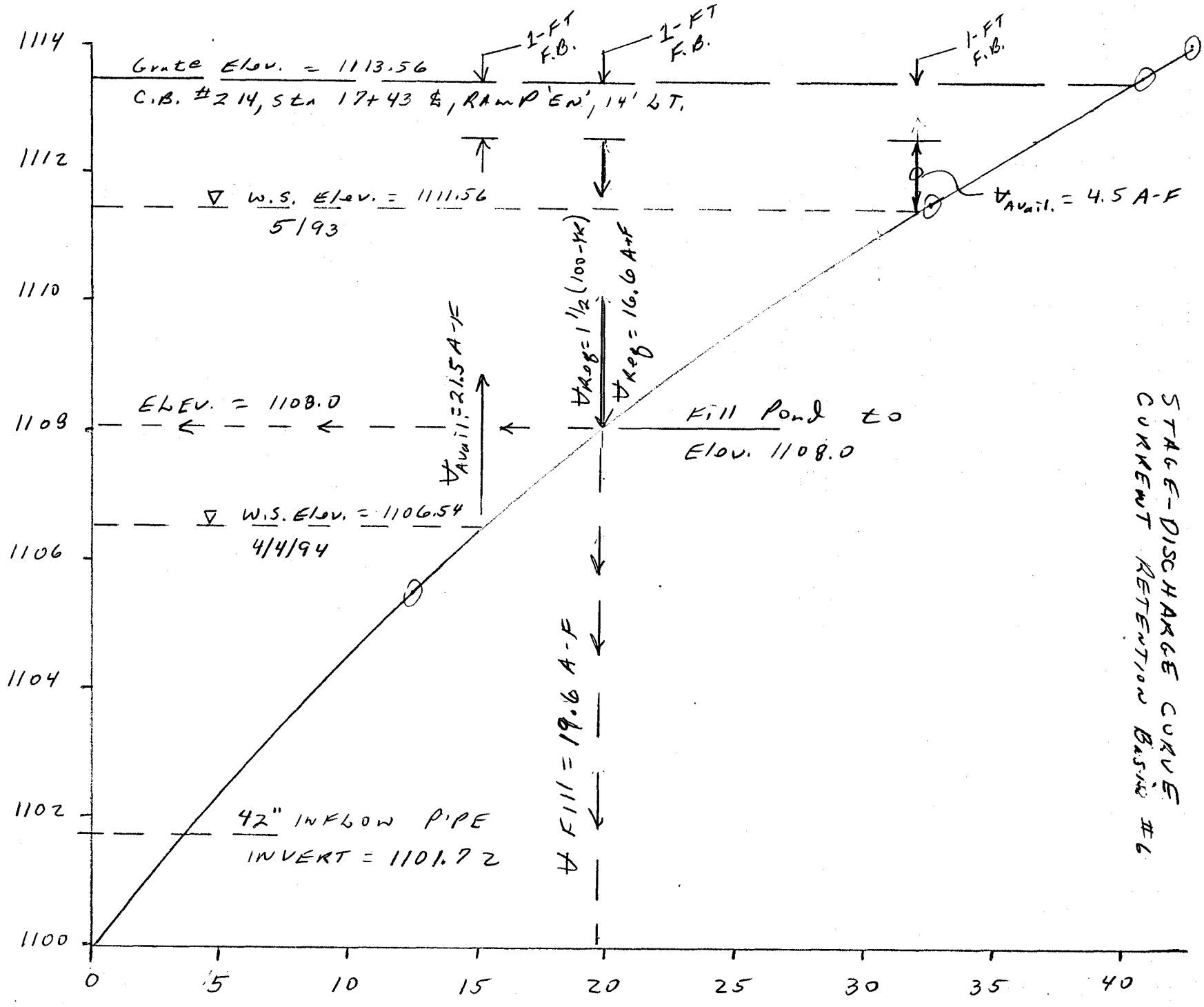

STAGE-DISCHARGE CURVE
CURRENT RETENTION BASIN #6

BRW

JOB SR 153 Drainage SHEET NO.
MADE BY D. Schuck DATE 4/4/94 JOB NO.
CHECKED BY L. Kast DATE 4/5/94 SEC. SHT. NO. 7/9
CALCULATIONS FOR Retention Basin #6 G-16

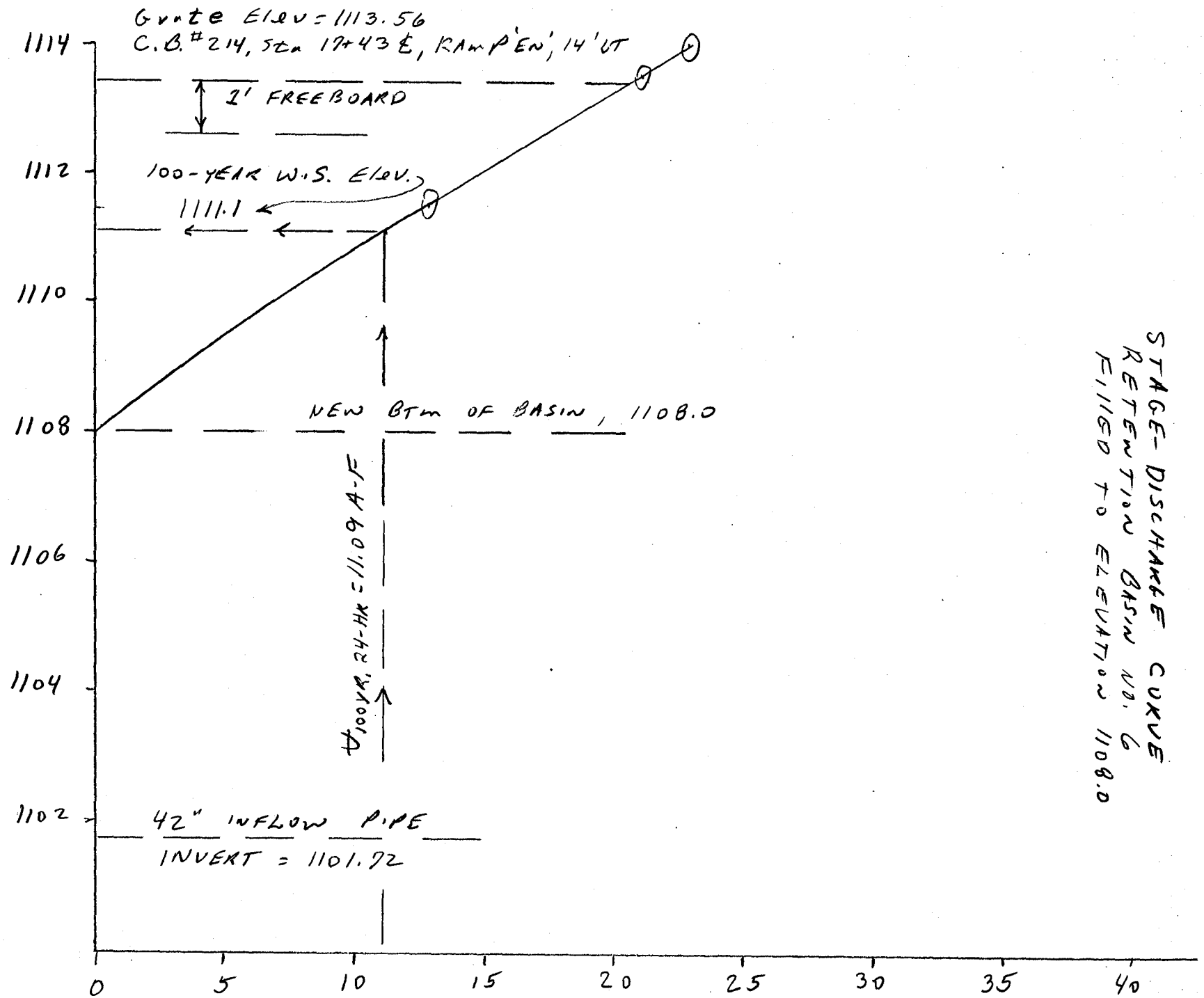

STAGE-DISCHARGE CURVE
RETENTION BASIN NO. 6
FILLED TO ELEVATION 1108.0

BRW

JOB SR 153 Drainage SHEET NO.
MADE BY D. Schaub DATE 4/4/94 JOB NO.
CHECKED BY H. Hoeft DATE 4/5/94 SEC. SHT. NO. 8/9
CALCULATIONS FOR Retention Basin #6 6-17

CONCLUSION:

To minimize the potential problem with standing water, it is recommended that Retention Basin #6 be filled with rock or granular material to elevation 1108.0. The 42" discharge pipe will discharge into a small conical pond with rip rap protected 3:1 sideslopes.

The following pertinent design data are:

- Maintain 1' Freeboard in lowest Catch basin during runoff volume of 1.5 times the 100-year, 24 hour runoff.
- W.S. Elev. = 1111.1 for 100-year, 24 hour runoff.
- 100-Year, 24 hour Volume = 11.09 A-F
- Required fill volume = 19.6 A-F to Reach elevation 1108.0

BRW

JOB SK 153, Drainage SHEET NO.
MADE BY D. Schaus DATE 4/4/94 JOB NO.
CHECKED BY G Graf DATE 4/5/94 SEC. SHT. NO. 9/9
CALCULATIONS FOR Retention Basin #6

PROBLEM STATEMENT: ① DEVELOP AN INFLOW VOLUME FROM BOTH AN EXIST 36" RCP (SR 143, Hohokum Expressway) AND FROM the SURROUNDING AREA TO SIZE Retention Basin # 7.

② Determine the hydraulic effect of the detention basin on the exist. 36" RCP. See Sheet 8.

Assumptions: Runoff into Retention Basin #7 originates from both east and west of the Hohokum Expressway. Runoff from the east side reaches the Basin through a 36" RCP and runoff from the west side reaches the basin as overland sheet flow from south to north.

methodology:

- Size the retention basin for the 100-year, 2 hour storm event.
- Determine CA as follows
  - East side of SR143: Set Q_{10} equal full flow

BRW

JOB SR 153 Drainage SHEET NO.
MADE BY D. Schaub DATE 4/4/94 JOB NO.
CHECKED BY G Geet DATE 4/5/94 SEC. SHT. NO. 1/11
CALCULATIONS FOR Retention Basin #7 G-19

for 36" RCP and T_c
= 30 minutes.

- West side of SR143: measure Area from contour maps and set C equal to Commercial property and undeveloped land.

- 100-YR, 2-Hour Rainfall = 2.82 inches From COP Storm Drain Design Manual

- Peak Discharge FOR EXST 36" RCP

Given: 36" RCP
S = 0.0125 '/FT

SOURCE: SR 143 Plans
Hohokam (university - Sky Harbor)
RAM-600-3-511
143 MA 1

Q_p = 75 CFS (Assume 10-year)
see sheet 3

- CA FOR EXST 36" RCP (See Sht 4)

I = 2.5 in/hr for 10-year 30 minute storm

$Q = CIA \Rightarrow CA = 75/2.5 = 30$ Acres

BRW

JOB SR 153 Drainage SHEET NO.
MADE BY D. Schnub DATE 4/4/94 JOB NO.
CHECKED BY [illegible] DATE 4/5/94 SEC. SHT. NO. 2/11
CALCULATIONS FOR Retention Basin #7 G-20

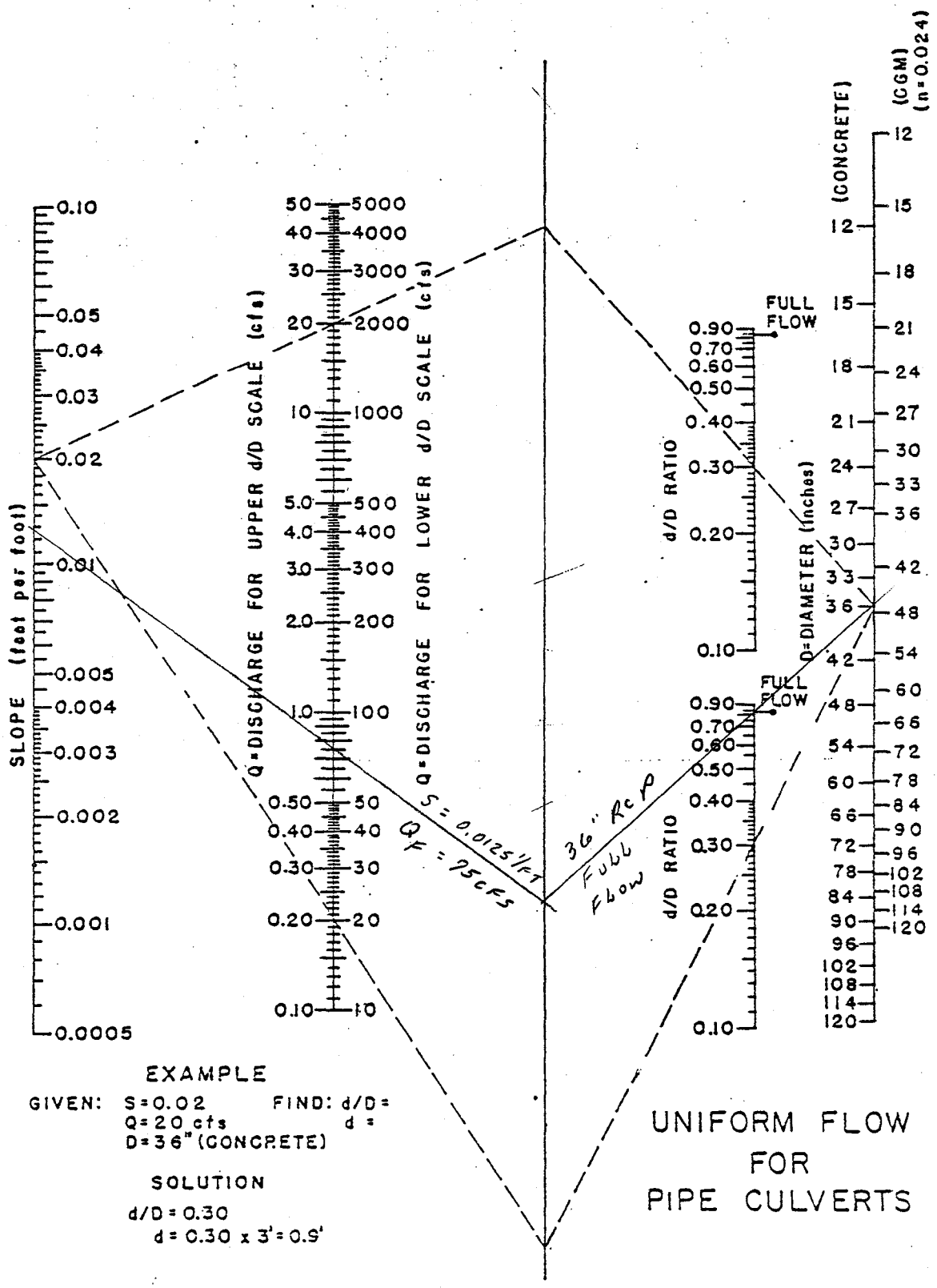

EXAMPLE

GIVEN: S=0.02 FIND: d/D=
Q=20 cfs d =
D=36" (CONCRETE)

SOLUTION

d/D = 0.30
d = 0.30 x 3' = 0.9'

UNIFORM FLOW
FOR
PIPE CULVERTS

AHD
Structures Section
Hydraulics Branch
10-15-72

Chart 15

Texas
Highway
Department

3/11
6-21

FIGURE 2-2
GENERALIZED I-D-F GRAPH FOR ZONE 8 OF ARIZONA

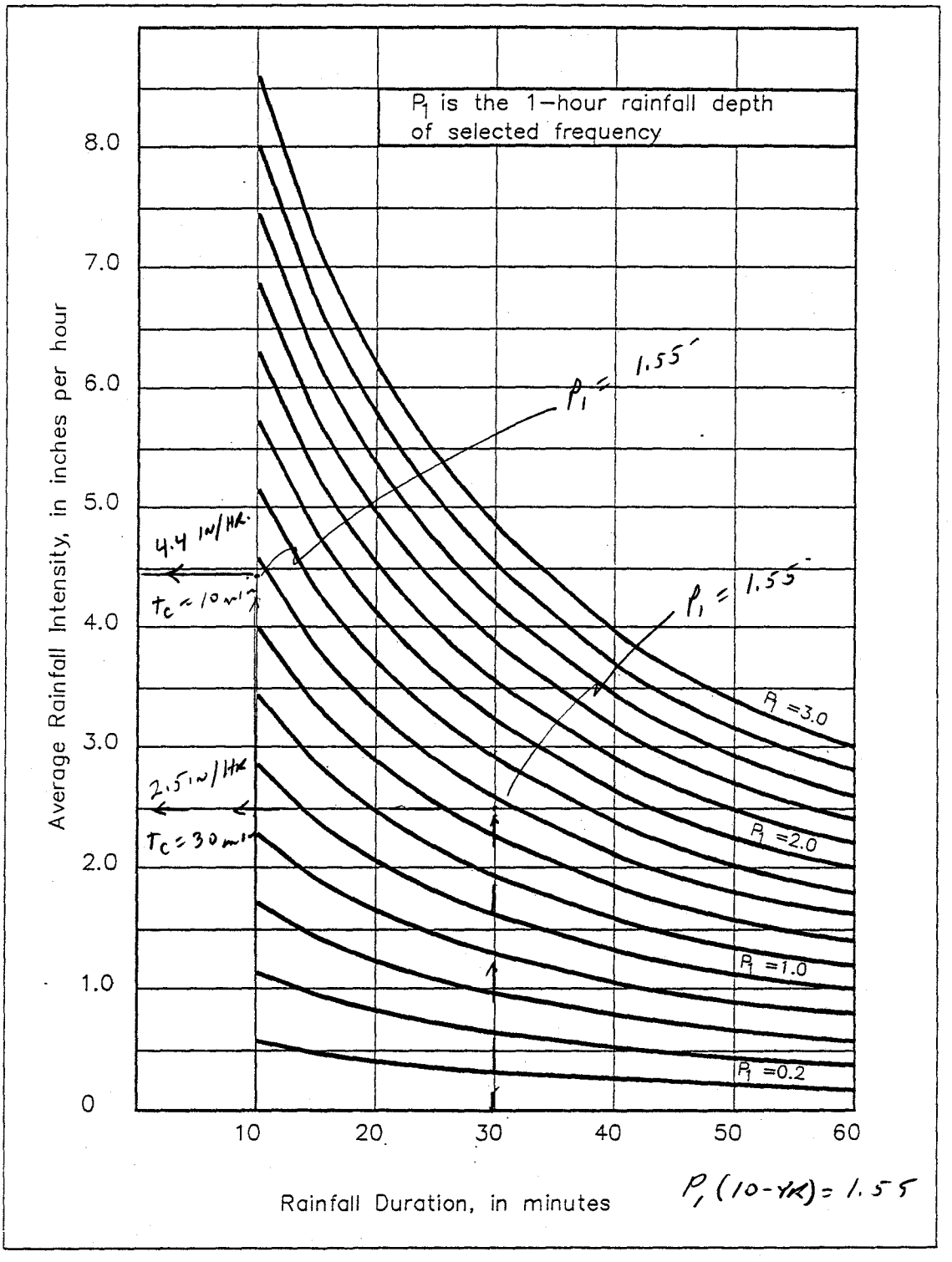

SOURCE: ADOT, Highway Drainage Design Manual, Hydrology March 1993

4/11

- CA FOR LAND ON WEST SIDE OF HOHOKUM
  - AREAS (North of Hilton Ave, between SR 153 and SR 143)

    Potential Commercial = 14.78 Acres

    Open Space Highway = 3.70 Acres

    C = 0.65 Highway slopes

    C = 0.86 (commercial & industrial)

    $\Sigma CA = 0.65 \times 3.70 + 0.86 \times 14.78$

    $\Sigma CA = 15.12$ Acres

- 100-Year, 2 Hour volume

  Total CA = 30. + 15.1 = 45.1

  $V = 45.1 \times \left(\frac{2.82 \text{ inches}}{12 \text{ in/FT}}\right) = 10.6$ Acre-FT

- 100-Year, 24 hour volume

  100-Year, 24 hour = 3.9 inches

  $V = 45.1 \times \left(\frac{3.9}{12}\right) = 14.7$ Acre-feet

Since a 36" RCP equalizer pipe under SR 153 will drain excess

BRW

JOB SR 153 SHEET NO.

MADE BY D. Schaub DATE 4/4/94 JOB NO.

CHECKED BY [illegible] DATE 4/5/94 SEC. SHT. NO. 5/11

CALCULATIONS FOR Retention Basin #7 6-23

Flow to the west and into naturally occuring depressions, (Retention basins) it is not necessary to retain the total 100-year, 24 hour runoff volume.

Conclusion: size the retention Basin No. 7 to retain the 100-year, 2-hour runoff volume of 10.6 Acre-Feet.

W.S. Elev. = 1120.72 (100YR, 2-HR)

W.S. Elev. = 1126.71 (100YR, 24HR)

Stage at 10-year peak = 1119.2

half 100-yr, 2-HR volume

Actual stage will be less than this due to equalizer pipe set at elevation 1122.60

BRW

JOB SR 153 SHEET NO.

MADE BY D. Schaub DATE 4/4/94 JOB NO.

CHECKED BY G. Goetz DATE 4/5/94 SEC. SHT. NO. 6/11

CALCULATIONS FOR Retention Basin # 7 G-24

• STAGE-VOLUME CALCULATIONS

STAGE	Δh	SURFACE AREA		STORAGE VOL.	
		@ STAGE	AVE.	INCR.	ACC.
msl	ft	S.F.	S.F.	A-F	A-F
1112.5		26900	30100.	1.7	0.0
1115.0	2.5	33300	38650.	3.7	1.7
1119.2	4.2	44000	45100.	0.8	5.4
1120.0	0.8	46200	52725.	6.1	6.2
1125.0	5.0	59250	61775.	2.8	12.3
1127.0	2.0	64300			15.1
			TOTAL	15.1	

100YR, 2HR @ V = 10.6 Acre-Feet, Stage = 1120.+ .72 = 1120.72

100YR, 24HR @ V = 14.7 Acre-Feet, Stage = 1125.+ 1.71 = 1126.71

Stage at 10-Year Peak Runoff ≅ 1119.2

BRW

Job SR 153 Sheet No.

Made By D. Schaub Date 4/4/94 Job No.

Checked By [illegible] Date 4/5/94 Sec. Sht. No. 7/11

Calculations For Retention #7

PROBLEM STATEMENT: EXTEND THE EXIST. 36" RCP (SR 143, Hohokum Expressway) TO Retention #7 without increasing its head water for the 10-year runoff event.

Assumptions: • Peak runoff will occur when half of the 100-year, 2-hour storm runoff is in Retention Basin #7. That is, half the hydrograph volume occurs at the peak runoff time.

CALCULATIONS:

GIVEN: Q_{10} = 75 cfs, see sheet 2

$V_{100,2}$ = 10.6 Acre-feet

$\frac{1}{2} V_{100,2}$ = 5.3 Acre-feet, Stage = 1119.2

Calculations for the existing pipe system are shown on page 9 and for the extended pipe system on page 10.

BRW

JOB SR 153 Drainage SHEET NO.

MADE BY D. Schoos DATE 4/4/94 JOB NO.

CHECKED BY G. Hoet DATE 4/5/94 SEC. SHT. NO. 8/11

CALCULATIONS FOR Retention Basin #7 6-26

PRESSURE FLOW CALCULATIONS

WORK SHEET FOR STORM SEWER DESIGN

EXISTING PIPE UNDER Hohokum Expressway (SR143)
STA 95+40 I RT, SR143 @ NOW m.H. #27

PROJECT _____ ROAD SR 153 COUNTY Maricopa DESIGN FREQUENCY 10-YR

COMPUTED BY D. Schuub DATE 4/5/94 CHECKED BY D. Gray DATE 4/6/94

Location		Pipe Data					Velocity Head		Pipe Head Losses				Structure Head Losses		Gradeline Elev. at Structure		Vertical Control			Flow Condition
Station of Structure	Structure Type & No.	Discharge	Pipe Size	Pipe Length	Crown Elev. Down-stream / Up-stream	Crown slope	Mean Pipe Velocity	Pipe Velocity Head	Coeff. K_b Bend or K_T Transition	Bend or Transition Energy Losses h_b / h_T	Friction Slope	Friction Head Loss	Coeff. K Structure	Structure Energy Losses	E.G.L. Down-stream / Up-stream	H.G.L. Down-stream / Up-* stream	Invert Elev. Down-stream / Up-stream	Top of Struc. Elev.	Free-board	Partial, Backwater, Full, Surcharged, Drawdown
		Q				S_o	V	$V^2/2g$	K_b / K_T	h_b / h_T	S_f		K_{str}	h_{str}						Outlet:
		cfs	in.	ft.	ft.	ft/ft	fps	ft.	—	ft.	ft/ft	ft.	—	ft.	ft.	ft.	ft.	ft.	ft.	
1	2	3	4	5	6	7	8	9	10	11	12	13	14	15	16	17	18	19	20	
EXST. SYSTEM																				
Out fall	Manu. End Wall				—								1.0	1.74	1118.77 / 1120.51	1118.77 / "				
	EXST m.H.	95	36" RCP	284	1121.77 / 1125.21	.012	10.6	1.74	—	—	.0125	3.19	1.3 ①	2.26	1123.70 / 1125.96	1121.96 / 1125.02		1136.21	11.19	
	Drop Inlet	11	42" RCP	741	1125.21 / 1126.52	.0018	7.8	0.94	—	—	.005	3.71	0.2 ②	0.19	1129.67 / 1129.86	1128.73 / 1129.86		1129.56 ③ / 1130.0 ④		
																				Inlet:

* water surface elevation in structure. ① 90° manhole ② Bevel of Pipe inlet.
③ Top of Headwall ④ Natural Ground Elevation

G-29 9/11

PRESSURE FLOW CALCULATIONS

WORK SHEET FOR STORM SEWER DESIGN

STA. 93+97 RT TO STA 95+28 RT, SR 153 Plus
EXIST Pipe Under Hohokum Expressway (SR 143)

PROJECT _____ ROAD SR 153 COUNTY Maricopa DESIGN FREQUENCY 10 - YR

COMPUTED BY D. Schuub DATE 4/5/94 CHECKED BY [illegible] DATE 4/6/94

Location		Pipe Data					Velocity Head		Pipe Head Losses				Structure Head Losses		Gradeline Elev. at Structure		Vertical Control			Flow Condition
Station of Structure	Structure Type & No.	Discharge	Pipe Size	Pipe Length	Crown Elev. Down-stream / Up-stream	Crown slope	Mean Pipe Velocity	Pipe Velocity Head	Coeff. K_b Bend or K_T Transition	Bend or Transition Energy Losses h_b / h_T	Friction Slope	Friction Head Loss	Coeff. K Structure	Structure Energy Losses	E.G.L. Down-stream / Up-stream	H.G.L. Down-stream / Up-* stream	Invert Elev. Down-stream / Up-stream	Top of Struc. Elev.	Free-board	Partial, Backwater, Full, Surcharged, Drawdown
		Q				S_o	V	$V^2/2g$	K_b / K_T	h_b / h_T	S_f		K_{str}	h_{str}						Outlet:
		cfs	in.	ft.	ft.	ft/ft	fps	ft.	—	ft.	ft/ft	ft.	—	ft.	ft.	ft.	ft.	ft.	ft.	
1	2	3	4	5	6	7	8	9	10	11	12	13	14	15	16	17	18	19	20	
Outlet To Ret #7	Mani End wall														1119.2	1119.2 ← (3)				
					1120.74								1.0	0.56	1119.56	"		1120.74		
	MH 29	75	48" RCP	55'	1120.91	.003	6.0	0.56	-	—	.0025	0.14			1119.90	1119.34				
					1120.93								0.05	0.03	1119.93	1119.37		1131.50	12.13	
	MH 28	"	48" RCP	160'	1121.57	.004	6.0	0.56	—	—	"	0.40	28°⊥ 0.12	0.07	1120.33	1119.77				
					1121.59										1120.40	1119.84		1129.70	9.86	
	MH 27	"	48" RCP	47'	1121.97	.0038	6.0	0.56	—	-	"	0.12			1120.52	1119.96				
					1121.77								0.05	0.03	1120.55	1118.81		1126.00	6.04	
	EXST M.H.	"	36" RCP	284	1125.21	.022	10.6	1.74	—	-	.0125	3.19			1123.74	1122.00				
					1125.21								1.3 (1)	2.26	1126.00	1125.06		1136.21	11.19	
	Drop Inlet	"	42" RCP	741	1126.52	.0018	7.8	0.94	—	-	.005	3.71			1129.71	1128.77		1129.56 (3)		
													(2) 0.2	0.19	1129.90	1129.90		1130.0 (4)		
																				Inlet:

New Pipe

Exist System

* water surface elevation in structure. (1) 90° manhole (2) Beveled pipe inlet
W.S. Elevation of Retention (3) top of Headwall (4) Natural Ground Elevation
Basin #7 with half of 100-year, 2-hr storm stored in Basin.

G-28
11/01

Conclusion: The proposed pipe extension will not increase the headwater for the 10-year storm at the existing headwall. The headwater elevations are as follows:

Existing System = 1129.86

Proposed Extension = 1129.90

Use an 48" RCP for the extension.

BRW

JOB SR 153 Drainage SHEET NO.

MADE BY D. Schaub DATE 4/4/94 JOB NO.

CHECKED BY G Goff DATE 4/6/94 SEC. SHT. NO. 11/11

CALCULATIONS FOR Retention Basin #7 6-29

PROBLEM STATEMENT: Determine the 100-year runoff volume that will flow into Detention No. 1, and with that volume and a stage-discharge curve determine the 100-year water surface elevation in the basin.

Methodology:

- Determine 100-year, 24 hour and 100-year, 6 hour peak discharge and volumes with HEC-1.
- Check the 100-year peak discharge with the rational method.
- Report the 100-year storm duration that produces the highest water surface elevation

BRW

Job SR 153 Drainage Sheet No.
Made By D. Schaub Date 4/12/94 Job No.
Checked By G Koetz Date 4/14/94 Sec. Sht. No. 1/33
Calculations For Detention Basin #1

Calculations:

The calculations are organized as follows:

	Pages
• Runoff CA	3
• T_c	4
• I_{10} & I_{100}	5
• Q_{10} & Q_{100} (Rational	6
• HEC-1 Parameters	7
• Stage-volume curve	8
• Stage-Discharge curve	9-23
• HEC 1, 100-year, 24-hour	24-27
• HEC 1, 100-year, 6-hour	28-31
• Conclusions	32-33

BRW

Job SR 153 Drainage Sheet No.
Made By D. Schaub Date 4/12/94 Job No.
Checked By G. Goff Date 4/14/94 Sec. Sht. No. 2/33
Calculations For Detention Basin #1

ARIZONA DEPARTMENT OF TRANSPORTATION

STORM SEWER RUNOFF CALCULATION RECORD

LOCATION DATA

Highway SR 153

Location Detention Basin 1

Project No.

DESIGN DATA

Frequency 100 years

P_6= _____ in. P_{24}= 3.90 in. P_1= _____ in.

RUNOFF CALCULATIONS

Drainage Area			Pav't.			Comm.			Resid.			Landscaped							Tc	P_{24} ~~I~~	Volume ~~Q~~
No.	Station-Station	Acre	C	A	CA	C	A	CA	C	A	CA	C	A	CA	C	A	CA	Σ CA	min.	~~in./hr.~~	~~cfs~~ acre-ft
107	18+00 to 21+15	0.32	.95	.21	.20							.60	.11	.066				0.266		3.90	.086
107C	9+00 to 14+25	0.66	.95	.66	.627													0.627		3.90	.204
107B	14+25 to 15+75	0.24	.95	.24	.228													0.228		3.90	.074
107A	15+75 to 18+00	0.30	.95	.30	.285													0.285		3.90	.093
107FU	62+60 to 68+66	0.63	.95	.63	.598													0.598		3.90	.194
108FU	62+95 to 68+75	0.96	.95	.96	.912													0.912		3.90	.296
	OFFSITE											.60	21	12.6				12.60		3.90	4.10
	Totals			3.00									21.11					15.516			5.04

Computed by: LM 4/5/94 Checked by: [illegible] Date: 4/6/94

† 20-0404 12/74

G-32

3/13

Worksheet 3: Time of concentration (T_c) or travel time (T_t)

Project SR 153 By D.J.S. Date 4/6/94

Location offsite Drainage Checked [illegible] Date 4/8/94

Circle one: Present Developed

Circle one: T_c T_t through subarea

NOTES: Space for as many as two segments per flow type can be used for each worksheet.

Include a map, schematic, or description of flow segments.

Sheet flow (Applicable to T_c only)	Segment ID				
1. Surface description (table 3-1)		bare soil			
2. Manning's roughness coeff., n (table 3-1) ..		.011			
3. Flow length, L (total L ≤ 300 ft)	ft	155			
4. Two-yr 24-hr rainfall, P_2	in	1.35			
5. Land slope, s	ft/ft	.026			
6. $T_t = \frac{0.007\ (nL)^{0.8}}{P_2^{0.5}\ s^{0.4}}$ Compute T_t	hr	.040	+		= .040

Shallow concentrated flow	Segment ID				
7. Surface description (paved or unpaved)		Unpaved	Unpaved		
8. Flow length, L	ft	260	850		
9. Watercourse slope, s	ft/ft	.079	.003		
10. Average velocity, V (figure 3-1)	ft/s	4.6	0.88		
11. $T_t = \frac{L}{3600\ V}$ Compute T_t	hr	.016	+	0.268	= .284

Channel flow	Segment ID				
12. Cross sectional flow area, a	ft^2				
13. Wetted perimeter, p_w	ft				
14. Hydraulic radius, $r = \frac{a}{p_w}$ Compute r	ft				
15. Channel slope, s	ft/ft				
16. Manning's roughness coeff., n					
17. $V = \frac{1.49\ r^{2/3}\ s^{1/2}}{n}$ Compute V	ft/s				
18. Flow length, L	ft				
19. $T_t = \frac{L}{3600\ V}$ Compute T_t	hr		+		= —
20. Watershed or subarea T_c or T_t (add T_t in steps 6, 11, and 19)	hr				.324

FIGURE 2-2
GENERALIZED I-D-F GRAPH FOR ZONE 8 OF ARIZONA

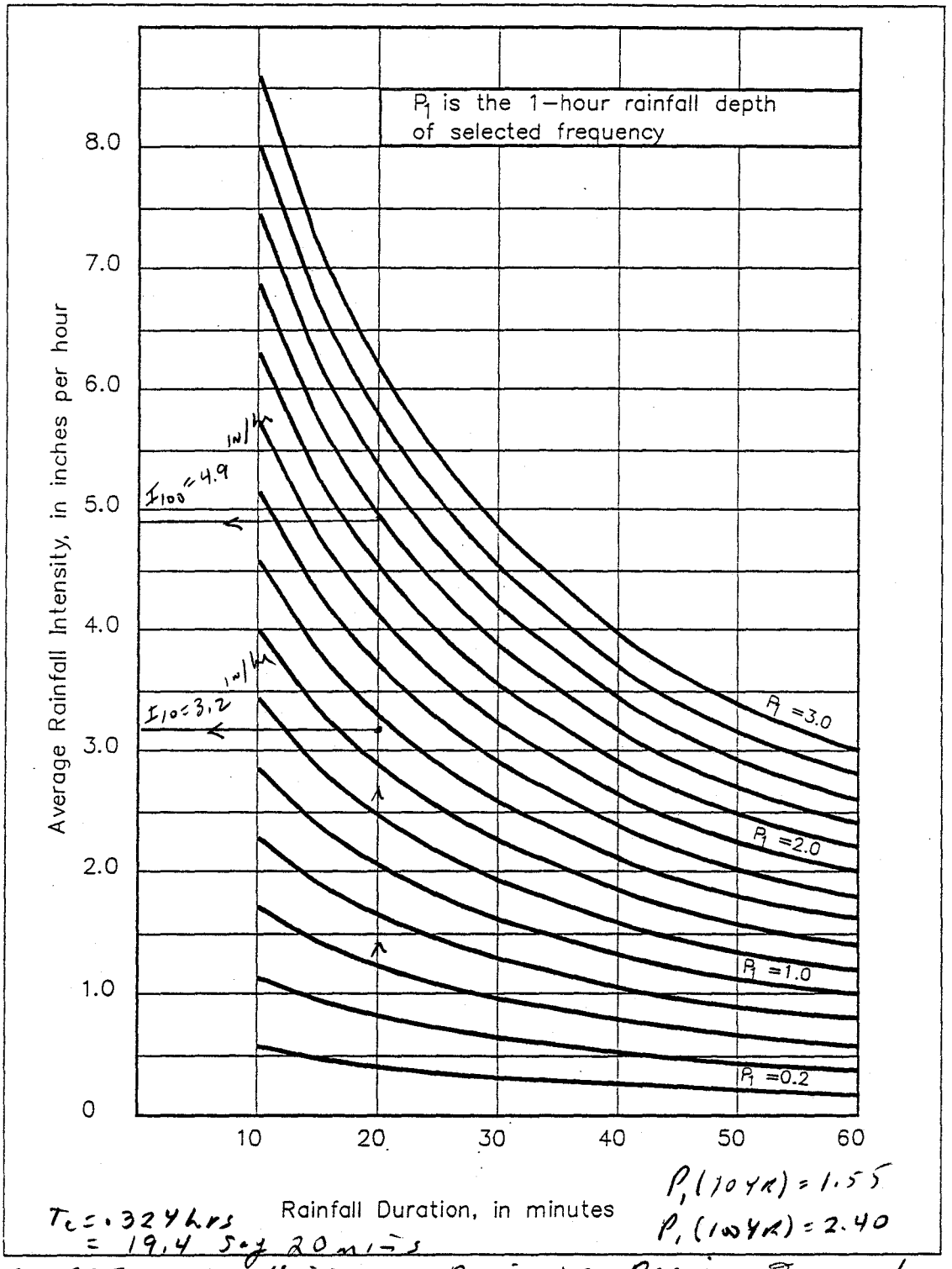

SOURCE: ADOT, Highway Drainage Design Manual, Hydrology March 1993.

5/33

G-34

- Peak Discharges Rational Method

$Q = CIA$

$\Sigma CA = 15.52$ Acres

- 100-Year

$P_{100YR,1hr} = 2.40''$

$I_{100} = 4.9$ in/hr (see next sheet)

$Q_{100} = CIA = 15.52 \times 4.9 = 76.0$ cfs

- 10-Year

$P_{10YR,1hr} = 1.55''$

$I_{10} = 3.2$ in/hr.

$Q_{10} = CIA = 15.52 \times 3.2 = 49.7$

Say 50.0 cfs

BRW

JOB SR 153 SHEET NO.

MADE BY D. Schoub DATE 4/12/94 JOB NO.

CHECKED BY G Hart DATE 4/14/94 SEC. SHT. NO. 6/33

CALCULATIONS FOR Detention Basin #1

- Peak Discharges By HEC-1
  - Parameters
    - Lag Time

      $T_c = 0.324$ hrs

      Lag $= 0.324 \times .6 = 0.194$ Hours

    - Area

      Area $= 21.11$ (Landscaped) $+ 3.00$ (Paved)

      $= 24.11$ Acres $= 0.0377$ Sq. miles

    - Curve Number

      Soil Type - B (Gilman-Estrella-Avondale)

      Source: SCS General Soil Map, Maricopa County

      TR-55, June 1986

      CN = 80 (Poor, Herbaceous, Table 2-2d)

      CN = 98 (Paved, Table 2-2a)

      Composite CN $= (80 \times 21.11 + 98 \times 3.00)/24.11$

      $= 82.2$

      Say 82

    - % Impervious

      $\% \text{ Imp} = \frac{3.0}{24.11} \times 100 = 12.4\%$

BRW

JOB SK153 Drainage SHEET NO.
MADE BY D. Schoob DATE 4/12/94 JOB NO.
CHECKED BY G Gart DATE 4/14/94 SEC. SHT. NO. 7/33
CALCULATIONS FOR Det Basin #1

• STAGE - VOLUME CALCULATIONS

STAGE msl	Δh ft	SURFACE AREA STAGE S.F.	SURFACE AREA AVE S.F.	ST. VOL. VOL A-F	ST. VOL. ACC A-F
1121.9		0			0
	0.1		14181.	0.033	
1122		28362.			0.033
	1.0		37058.	0.851	
1123		45754.			0.884
	1.0		56448.	1.296	
1124		67142.			2.180

BRW

Job SR 153 Drainage Sheet No.
Made By D. Schaub Date 4/1/94 Job No.
Checked By L. McIntosh Date 4/1/94 Sec. Sht. No. 8/33
Calculations For Detention Basin NO. 1

ARIZONA DEPARTMENT OF TRANSPORTATION

CULVERT COMPUTATION RECORD

PROJECT: _____ DESIGNER: D. Schaub

STATION: 70+04.55 TO 70+32.6 LT SR153 DATE: 4/4/94

HYDROLOGIC AND CHANNEL INFORMATION

DRAINAGE AREA _____

Q_1 = _____ TW_1 = _____

Q_2 = _____ TW_2 = _____

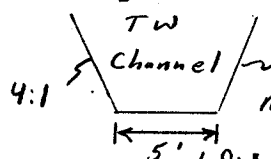

n = 0.045 (Dirt & weeds)

S = .0022 FT for 380'

(Q_1 = DESIGN DISCHARGE, SAY Q_{25}
Q_2 = CHECK DISCHARGE, SAY Q_{50})

SKETCH

✓ Dab 4/14/94

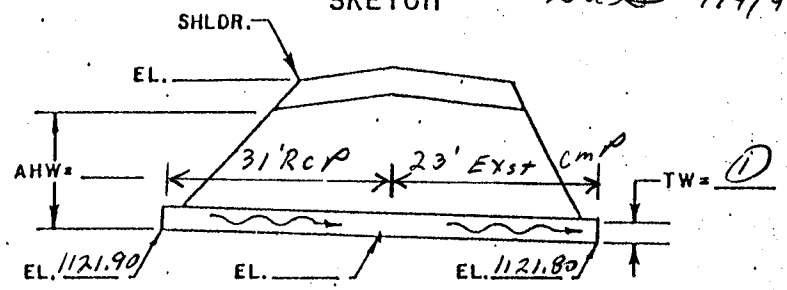

S_0 = .00185 L = 54 L/100 S_0 = _____

MEAN STREAM VELOCITY = _____

CULVERT DESCRIPTION		Q	CAP. CHART HW	HEADWATER COMPUTATION										CONTROL HW	OUTLET VELOCITY	COST	DHW ELEV.	COMMENTS
				INLET CONT.		OUTLET CONTROL $HW = H + h_0 - LS_0$												
SIZE	ENTR. TYPE	3		HW/D	HW	K_e	H	d_c	$\frac{d_c + D}{2}$	1 TW	h_0	LS_0	HW				1 DHW ELEV.	
3-36" RCP	Headwall Beveled	0								1121.80							1121.90	
		5								1122.47							1122.55	
		10								1122.76							1122.85	
		15								1122.98							1123.08	
		20								1123.16							1123.28	
		25								1123.31							1123.45	
		30								1123.44							1123.61	
		35								1123.57							1123.75	
		40								1122.68							1123.88	
		45								1123.79							1124.01	
		50								1123.88							1124.13	

3 SUMMARY & RECOMMENDATIONS 1 Controlling Tail Water produced by downstream channel

Computations on next Computer Printout

G-38 9/33

20-4403 12/74

CURRENT DATE: 04-12-1994
CURRENT TIME: 09:43:02

FILE DATE: 04-06-1994
FILE NAME: CUL2

STA 74+80 TO 75+75 LT, SR153

FHWA CULVERT ANALYSIS
HY-8, VERSION 4.1

TW From D.S. Channel

CULV	SITE DATA			CULVERT SHAPE, MATERIAL, INLET				
	INLET ELEV. (FT)	OUTLET ELEV. (FT)	CULVERT LENGTH (FT)	BARRELS SHAPE MATERIAL	SPAN (FT)	RISE (FT)	MANNING n	INLET TYPE
1	1121.90	1121.80	54.00	3 RCP	3.00	3.00	.012	CONVENTIONAL
2								
3								
4								
5								
6								

SUMMARY OF CULVERT FLOWS (CFS) FILE: CUL2 DATE: 04-06-1994

ELEV (FT)	TOTAL	1	2	3	4	5	6	ROADWAY	ITR
1121.90	0	0	0	0	0	0	0	0	1
1122.55	5	5	0	0	0	0	0	0	1
1122.85	10	10	0	0	0	0	0	0	1
1123.08	15	15	0	0	0	0	0	0	1
1123.28	20	20	0	0	0	0	0	0	1
1123.45	25	25	0	0	0	0	0	0	1
1123.61	30	30	0	0	0	0	0	0	1
1123.75	35	35	0	0	0	0	0	0	1
1123.88	40	40	0	0	0	0	0	0	1
1124.01	45	45	0	0	0	0	0	0	1
1124.13	50	50	0	0	0	0	0	0	1
1127.00	163	163	0	0	0	0	0	OVERTOPPING	

SUMMARY OF ITERATIVE SOLUTION ERRORS FILE: CUL2 DATE: 04-06-1994

HEAD ELEV(FT)	HEAD ERROR(FT)	TOTAL FLOW(CFS)	FLOW ERROR(CFS)	% FLOW ERROR
1121.90	0.00	0	0	0.00
1122.55	0.00	5	0	0.00
1122.85	0.00	10	0	0.00
1123.08	0.00	15	0	0.00
1123.28	0.00	20	0	0.00
1123.45	0.00	25	0	0.00
1123.61	0.00	30	0	0.00
1123.75	0.00	35	0	0.00
1123.88	0.00	40	0	0.00
1124.01	0.00	45	0	0.00
1124.13	0.00	50	0	0.00

<1> TOLERANCE (FT) = 0.010 <2> TOLERANCE (%) = 1.000

① controlling headwater produced by downstream channel Tailwater

CURRENT DATE: 04-12-1994 FILE DATE: 04-06-1994
CURRENT TIME: 09:43:02 FILE NAME: CUL2

PERFORMANCE CURVE FOR CULVERT # 1 - 3 (3 BY 3) RCP

DIS-CHARGE FLOW (cfs)	HEAD-WATER ELEV. (ft)	INLET CONTROL DEPTH (ft)	OUTLET CONTROL DEPTH (ft)	FLOW TYPE <F4>	NORMAL DEPTH (ft)	CRITICAL DEPTH (ft)	OUTLET VEL. (fps)	OUTLET DEPTH (ft)	TAILWATER VEL. (fps)	TAILWATER DEPTH (ft)
0	1121.90	0.00	0.00	0-NF	0.00	0.00	0.00	0.00	0.00	0.00
5	1122.55	0.54	0.65	3-M1t	0.45	0.38	1.39	0.67	0.96	0.67
10	1122.85	0.73	0.95	3-M1t	0.65	0.56	1.70	0.96	1.17	0.96
15	1123.08	0.90	1.18	3-M1t	0.80	0.69	1.94	1.18	1.31	1.18
20	1123.28	1.06	1.38	3-M1t	0.94	0.80	2.15	1.36	1.42	1.36
25	1123.45	1.21	1.55	3-M1t	1.05	0.91	2.34	1.51	1.50	1.51
30	1123.61	1.35	1.71	3-M1t	1.17	0.99	2.52	1.64	1.58	1.64
35	1123.75	1.48	1.85	3-M1t	1.27	1.07	2.69	1.77	1.64	1.77
40	1123.88	1.61	1.98	3-M1t	1.37	1.16	2.86	1.88	1.70	1.88
45	1124.01	1.72	2.11	3-M1t	1.47	1.23	3.03	1.99	1.75	1.99
50	1124.13	1.83	2.23	3-M1t	1.56	1.30	3.18	2.08	1.80	2.08

El. inlet face invert 1121.90 ft El. outlet invert 1121.80 ft
El. inlet throat invert 0.00 ft El. inlet crest 0.00 ft

***** SITE DATA ***** CULVERT INVERT **********

INLET STATION (FT)	100.00
INLET ELEVATION (FT)	1121.90
OUTLET STATION (FT)	154.00
OUTLET ELEVATION (FT)	1121.80
NUMBER OF BARRELS	3
SLOPE (V-FT/H-FT)	0.0019
CULVERT LENGTH ALONG SLOPE (FT)	54.00

***** CULVERT DATA SUMMARY **********

BARREL SHAPE	CIRCULAR
BARREL DIAMETER	3.00 FT
BARREL MATERIAL	CONCRETE
BARREL MANNING'S N	0.012
INLET TYPE	CONVENTIONAL
INLET EDGE AND WALL	GROOVED END IN HEADWALL
INLET DEPRESSION	NONE

11/33
6-40

CURRENT DATE: 04-12-1994
CURRENT TIME: 09:43:02

FILE DATE: 04-06-1994
FILE NAME: CUL2

TAILWATER

******* REGULAR CHANNEL CROSS SECTION **********

BOTTOM WIDTH (FT)	5.00
SIDE SLOPE H/V (X:1)	4.0
CHANNEL SLOPE V/H (FT/FT)	0.002
MANNING'S N (.01-0.1)	0.045
CHANNEL INVERT ELEVATION (FT)	1121.80
CULVERT NO.1 OUTLET INVERT ELEVATION	1121.80 FT

******* UNIFORM FLOW RATING CURVE FOR DOWNSTREAM CHANNEL

FLOW (CFS)	W.S.E. (FT)	FROUDE NUMBER	DEPTH (FT)	VEL. (FPS)	SHEAR (PSF)
0.00	1121.80	0.000	0.00	0.00	0.00
5.00	1122.47	0.207	0.67	0.96	0.09
10.00	1122.76	0.210	0.96	1.17	0.13
15.00	1122.98	0.213	1.18	1.31	0.16
20.00	1123.16	0.214	1.36	1.42	0.19
25.00	1123.31	0.215	1.51	1.50	0.21
30.00	1123.44	0.216	1.64	1.58	0.23
35.00	1123.57	0.217	1.77	1.64	0.24
40.00	1123.68	0.218	1.88	1.70	0.26
45.00	1123.79	0.219	1.99	1.75	0.27
50.00	1123.88	0.220	2.08	1.80	0.29

ROADWAY OVERTOPPING DATA

ROADWAY SURFACE	GRAVEL
EMBANKMENT TOP WIDTH (FT)	50.00
CREST LENGTH (FT)	60.00
OVERTOPPING CREST ELEVATION (FT)	1127.00

CURRENT DATE: 04-12-1994
CURRENT TIME: 09:16:50

FILE DATE: 04-06-1994
FILE NAME: CUL2

STA 74+80 TO 75+75 LT, SR 153
TW FROM D.S. 3-24" CMP'S

FHWA CULVERT ANALYSIS
HY-8, VERSION 4.1

CULV	SITE DATA			CULVERT SHAPE, MATERIAL, INLET				
	INLET ELEV. (FT)	OUTLET ELEV. (FT)	CULVERT LENGTH (FT)	BARRELS SHAPE MATERIAL	SPAN (FT)	RISE (FT)	MANNING n	INLET TYPE
1	1121.90	1121.80	54.00	3 RCP	3.00	3.00	.012	CONVENTIONAL
2								
3								
4								
5								
6								

SUMMARY OF CULVERT FLOWS (CFS) FILE: CUL2 DATE: 04-06-1994

ELEV (FT)	TOTAL	1	2	3	4	5	6	ROADWAY	ITR
1121.90	0	0	0	0	0	0	0	0	1
1122.47	5	5	0	0	0	0	0	0	1
1122.71	10	10	0	0	0	0	0	0	1
1122.90	15	15	0	0	0	0	0	0	1
1123.06	20	20	0	0	0	0	0	0	1
1123.20	25	25	0	0	0	0	0	0	1
1123.34	30	30	0	0	0	0	0	0	1
1123.47	35	35	0	0	0	0	0	0	1
1123.68	40	40	0	0	0	0	0	0	1
1123.78	45	45	0	0	0	0	0	0	1
1123.88	50	50	0	0	0	0	0	0	1
1127.00	184	184	0	0	0	0	0	OVERTOPPING	

SUMMARY OF ITERATIVE SOLUTION ERRORS FILE: CUL2 DATE: 04-06-1994

HEAD ELEV(FT)	HEAD ERROR(FT)	TOTAL FLOW(CFS)	FLOW ERROR(CFS)	% FLOW ERROR
1121.90	0.00	0	0	0.00
1122.47	0.00	5	0	0.00
1122.71	0.00	10	0	0.00
1122.90	0.00	15	0	0.00
1123.06	0.00	20	0	0.00
1123.20	0.00	25	0	0.00
1123.34	0.00	30	0	0.00
1123.47	0.00	35	0	0.00
1123.68	0.00	40	0	0.00
1123.78	0.00	45	0	0.00
1123.88	0.00	50	0	0.00

<1> TOLERANCE (FT) = 0.010 <2> TOLERANCE (%) = 1.000

13/33

NOTE: Tailwater from downstream 3-24" cmp's
① For controlling headwater, see previous computer printout with tailwater produced by downstream channel.

G-42

CURRENT DATE: 04-12-1994 FILE DATE: 04-06-1994
CURRENT TIME: 09:16:50 FILE NAME: CUL2

PERFORMANCE CURVE FOR CULVERT # 1 - 3 (3 BY 3) RCP

DIS-CHARGE FLOW (cfs)	HEAD-WATER ELEV. (ft)	INLET CONTROL DEPTH (ft)	OUTLET CONTROL DEPTH (ft)	FLOW TYPE <F4>	NORMAL DEPTH (ft)	CRITICAL DEPTH (ft)	OUTLET VEL. (fps)	OUTLET DEPTH (ft)	TAILWATER VEL. (fps)	TAILWATER DEPTH (ft)
0	1121.90	0.00	0.00	0-NF	0.00	0.00	0.00	0.00	0.00	0.00
5	1122.47	0.54	0.57	2-M2c	0.45	0.38	3.11	0.38	0.00	0.00
10	1122.71	0.73	0.81	2-M2c	0.65	0.56	3.62	0.56	0.00	0.02
15	1122.90	0.90	1.00	2-M2c	0.80	0.69	4.05	0.69	0.00	0.24
20	1123.06	1.06	1.16	2-M2c	0.94	0.80	4.37	0.80	0.00	0.44
25	1123.20	1.21	1.30	2-M2c	1.05	0.91	4.61	0.91	0.00	0.63
30	1123.34	1.35	1.44	2-M2c	1.17	0.99	4.89	0.99	0.00	0.81
35	1123.47	1.48	1.57	2-M2c	1.27	1.07	5.11	1.07	0.00	0.99
40	1123.68	1.61	1.78	3-M1t	1.37	1.16	3.59	1.56	0.00	1.56
45	1123.78	1.72	1.88	3-M1t	1.47	1.23	3.85	1.62	0.00	1.62
50	1123.88	1.83	1.98	3-M1t	1.56	1.30	4.06	1.69	0.00	1.69

El. inlet face invert 1121.90 ft El. outlet invert 1121.80 ft
El. inlet throat invert 0.00 ft El. inlet crest 0.00 ft

```
***** SITE DATA ***** CULVERT INVERT **************
      INLET STATION (FT)                      100.00
      INLET ELEVATION (FT)                   1121.90
      OUTLET STATION (FT)                     154.00
      OUTLET ELEVATION (FT)                  1121.80
      NUMBER OF BARRELS                         3
      SLOPE (V-FT/H-FT)                         0.0019
      CULVERT LENGTH ALONG SLOPE (FT)         54.00

***** CULVERT DATA SUMMARY ************************
      BARREL SHAPE          CIRCULAR
      BARREL DIAMETER         3.00 FT
      BARREL MATERIAL       CONCRETE
      BARREL MANNING'S N    0.012
      INLET TYPE            CONVENTIONAL
      INLET EDGE AND WALL   GROOVED END IN HEADWALL
      INLET DEPRESSION      NONE
```

CURRENT DATE: 04-12-1994
CURRENT TIME: 09:16:50

FILE DATE: 04-06-1994
FILE NAME: CUL2

TAILWATER

TAILWATER RATING CURVE

FLOW(CFS)	W.S.E.(FT)	DEPTH (FT)
0	1121.80	0.00
5	1121.80	0.00
10	1121.82	0.02
15	1122.04	0.24
20	1122.24	0.44
25	1122.43	0.63
30	1122.61	0.81
35	1122.79	0.99
40	1123.36	1.56
45	1123.42	1.62
50	1123.49	1.69

ROADWAY OVERTOPPING DATA

ROADWAY SURFACE	GRAVEL
EMBANKMENT TOP WIDTH (FT)	50.00
CREST LENGTH (FT)	60.00
OVERTOPPING CREST ELEVATION (FT)	1127.00

ARIZONA DEPARTMENT OF TRANSPORTATION

CULVERT COMPUTATION RECORD

PROJECT: _____ DESIGNER: D. Schaub

STATION: 74+80 TO 75+75 LT., SR 153 DATE: 4/4/94

HYDROLOGIC AND CHANNEL INFORMATION

DRAINAGE AREA _____

Q_1 = _____ TW_1 = _____

Q_2 = _____ TW_2 = _____

(Q_1 = DESIGN DISCHARGE, SAY Q_{25}
Q_2 = CHECK DISCHARGE, SAY Q_{50})

SKETCH

✓ Gak 4/14/94

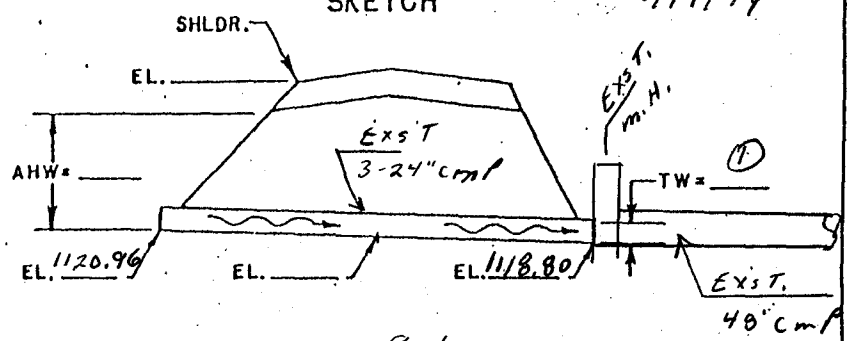

S_0 = .00526 L = 93' L/100 S_0 = _____

MEAN STREAM VELOCITY = _____

CULVERT DESCRIPTION		Q	CAP CHART HW	HEADWATER COMPUTATION										CONTROL HW	OUTLET VELOCITY	COST	DHW ELEV.	COMMENTS
				INLET CONT.		OUTLET CONTROL $HW = H + h_0 - LS_0$												
SIZE	ENTR. TYPE			HW/D	HW	K_e	H	d_c	$\frac{d_c + D}{2}$	① TW	h_0	LS_0	HW					
3-24" cmp	Headwall sq. Edge	0								1118.80							1120.96	
		5								1119.78							1121.56	
		10								1120.19							1121.82	
		15								1120.54							1122.04	
		20								1120.82							1122.24	
		25								1121.12							1122.43	
		30								1121.37							1122.61	
		35								1121.61							1122.79	
		40								1121.85							1123.36	
		45								1122.08							1123.42	
		50								1122.31							1123.49	

SUMMARY & RECOMMENDATIONS ① Tailwater elevations are equal to headwater elevations for downstream 48" cmp.

Computations on next Computer printout

1 ⓜ 20-4403 12/74

G-45 16/33

CURRENT DATE: 04-12-1994
CURRENT TIME: 09:06:19

FILE DATE: 04-06-1994
FILE NAME: CUL124

STA 74+80 TO 75+75 LT, SR 153

FHWA CULVERT ANALYSIS
HY-8, VERSION 4.1

CULV	SITE DATA			CULVERT SHAPE, MATERIAL, INLET				
	INLET ELEV. (FT)	OUTLET ELEV. (FT)	CULVERT LENGTH (FT)	BARRELS SHAPE MATERIAL	SPAN (FT)	RISE (FT)	MANNING n	INLET TYPE
1	1120.96	1118.80	93.03	3 CSP	2.00	2.00	.024	CONVENTIONAL
2								
3								
4								
5								
6								

SUMMARY OF CULVERT FLOWS (CFS) FILE: CUL124 DATE: 04-06-1994

ELEV (FT)	TOTAL	1	2	3	4	5	6	ROADWAY	ITR
1120.96	0	0	0	0	0	0	0	0	1
1121.56	5	5	0	0	0	0	0	0	1
1121.82	10	10	0	0	0	0	0	0	1
1122.04	15	15	0	0	0	0	0	0	1
1122.24	20	20	0	0	0	0	0	0	1
1122.43	25	25	0	0	0	0	0	0	1
1122.61	30	30	0	0	0	0	0	0	1
1122.79	35	35	0	0	0	0	0	0	1
1123.36	40	40	0	0	0	0	0	0	1
1124.00	45	45	0	0	0	0	0	0	1
1123.49	50	50	0	0	0	0	0	0	1
1130.00	81	81	0	0	0	0	0	OVERTOPPING	

SUMMARY OF ITERATIVE SOLUTION ERRORS FILE: CUL124 DATE: 04-06-1994

HEAD ELEV(FT)	HEAD ERROR(FT)	TOTAL FLOW(CFS)	FLOW ERROR(CFS)	% FLOW ERROR
1120.96	0.00	0	0	0.00
1121.56	0.00	5	0	0.00
1121.82	0.00	10	0	0.00
1122.04	0.00	15	0	0.00
1122.24	0.00	20	0	0.00
1122.43	0.00	25	0	0.00
1122.61	0.00	30	0	0.00
1122.79	0.00	35	0	0.00
1123.36	0.00	40	0	0.00
1124.00	0.00	45	0	0.00
1123.49	0.00	50	0	0.00

<1> TOLERANCE (FT) = 0.010 <2> TOLERANCE (%) = 1.000

CURRENT DATE: 04-12-1994 FILE DATE: 04-06-1994
CURRENT TIME: 09:06:19 FILE NAME: CUL124

PERFORMANCE CURVE FOR CULVERT # 1 - 3 (2 BY 2) CSP

DIS-CHARGE FLOW (cfs)	HEAD-WATER ELEV. (ft)	INLET CONTROL DEPTH (ft)	OUTLET CONTROL DEPTH (ft)	FLOW TYPE <F4>	NORMAL DEPTH (ft)	CRITICAL DEPTH (ft)	OUTLET VEL. (fps)	OUTLET DEPTH (ft)	TAILWATER VEL. (fps)	TAILWATER DEPTH (ft)
0	1120.96	0.00	0.00	0-NF	0.00	0.00	0.00	0.00	0.00	0.00
5	1121.56	0.61	0.61	1-S2n	0.40	0.44	3.69	0.40	0.00	0.98
10	1121.82	0.86	0.86	1-S2n	0.57	0.63	4.53	0.57	0.00	1.39
15	1122.04	1.08	1.08	1-S2n	0.70	0.79	5.07	0.70	0.00	1.75
20	1122.24	1.28	1.28	1-S1f	0.82	0.91	2.12	2.00	0.00	2.02
25	1122.43	1.47	1.47	1-S1f	0.93	1.03	2.65	2.00	0.00	2.32
30	1122.61	1.65	1.65	1-S1f	1.04	1.13	3.18	2.00	0.00	2.57
35	1122.79	1.83	1.83	1-S1f	1.14	1.22	3.71	2.00	0.00	2.81
40	1123.36	2.02	2.40	4-FFt	1.25	1.31	4.24	2.00	0.00	3.05
45	1124.00	2.22	3.04	4-FFt	1.36	1.40	4.77	2.00	0.00	3.28
50	1123.49	2.43	2.53	3-M1f	1.48	1.47	5.31	2.00	0.00	3.51

El. inlet face invert 1120.96 ft El. outlet invert 1118.80 ft
El. inlet throat invert 0.00 ft El. inlet crest 0.00 ft

***** SITE DATA ***** CULVERT INVERT **********

INLET STATION (FT)	100.00
INLET ELEVATION (FT)	1120.96
OUTLET STATION (FT)	193.00
OUTLET ELEVATION (FT)	1118.80
NUMBER OF BARRELS	3
SLOPE (V-FT/H-FT)	0.0232
CULVERT LENGTH ALONG SLOPE (FT)	93.03

***** CULVERT DATA SUMMARY **********

BARREL SHAPE	CIRCULAR
BARREL DIAMETER	2.00 FT
BARREL MATERIAL	CORRUGATED STEEL
BARREL MANNING'S N	0.024
INLET TYPE	CONVENTIONAL
INLET EDGE AND WALL	SQUARE EDGE WITH HEADWALL
INLET DEPRESSION	NONE

18/33

6-47

CURRENT DATE: 04-12-1994
CURRENT TIME: 09:06:19

FILE DATE: 04-06-1994
FILE NAME: CUL124

TAILWATER

TAILWATER RATING CURVE

FLOW(CFS)	W.S.E.(FT)	DEPTH (FT)
0	1118.80	0.00
5	1119.78	0.98
10	1120.19	1.39
15	1120.55	1.75
20	1120.82	2.02
25	1121.12	2.32
30	1121.37	2.57
35	1121.61	2.81
40	1121.85	3.05
45	1122.08	3.28
50	1122.31	3.51

ROADWAY OVERTOPPING DATA

ROADWAY SURFACE	GRAVEL
EMBANKMENT TOP WIDTH (FT)	25.00
CREST LENGTH (FT)	50.00
OVERTOPPING CREST ELEVATION (FT)	1130.00

ARIZONA DEPARTMENT OF TRANSPORTATION

CULVERT COMPUTATION RECORD

PROJECT: _____ DESIGNER: D. Schaub

STATION: Sta 75+75 TO 81+00 LT SR153 DATE: 4/12/94

HYDROLOGIC AND CHANNEL INFORMATION

DRAINAGE AREA _____

Q_1 = _____ TW_1 = _____

Q_2 = _____ TW_2 = _____

(Q_1 = DESIGN DISCHARGE, SAY Q_{25}; Q_2 = CHECK DISCHARGE, SAY Q_{50})

SKETCH

✓ KAA 4/14/94

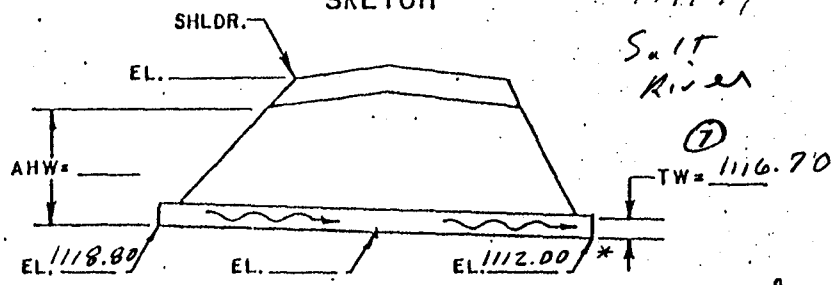

* Assumed
** From Contour map.

S_0 = .00544 L = 1250.** L/100 S_0 = _____

MEAN STREAM VELOCITY = _____

CULVERT DESCRIPTION SIZE	ENTR. TYPE	Q	CAR CHART HW	HEADWATER COMPUTATION: INLET CONT. HW/D	HW	OUTLET CONTROL HW = H + h_o − LS_o: K_e	H	d_c	$\frac{d_c+D}{2}$	TW	h_o	LS_o	HW	CONTROL HW	OUTLET VELOCITY	COST	DHW ELEV.	COMMENTS
48" Cmp	SQ Edge Headwall	0								(1)							1118.80	
		5								(1)							1119.78	
		10								(1)							1120.19	
		15								(1)							1120.54	
		20								(1)							1120.82	
		25								(1)							1121.12	
		30								(1)							1121.37	
		35								(1)							1121.61	
		40								(1)							1121.85	
		45								(1)							1122.08	
		50								(1)							1122.37	

SUMMARY & RECOMMENDATIONS

(1) W.S. Elev. (10 YR) Salt River (Sta 127+00) = 1119.17 − .0019[(140+00) − (127+00)] = 1116.70

Computations on next computer printout

20-4403 12/74

G-49 20/33

CURRENT DATE: 04-12-1994
CURRENT TIME: 08:56:18

FILE DATE: 04-07-1994
FILE NAME: CUL148

STA 75+25 TO 81+00 LT, SR153

FHWA CULVERT ANALYSIS
HY-8, VERSION 4.1

CULV	SITE DATA			CULVERT SHAPE, MATERIAL, INLET				
	INLET ELEV. (FT)	OUTLET ELEV. (FT)	CULVERT LENGTH (FT)	BARRELS SHAPE MATERIAL	SPAN (FT)	RISE (FT)	MANNING n	INLET TYPE
1	1118.80	1112.00	1250.02	1 CSP	4.00	4.00	.024	CONVENTIONAL
2								
3								
4								
5								
6								

SUMMARY OF CULVERT FLOWS (CFS) FILE: CUL148 DATE: 04-07-1994

ELEV (FT)	TOTAL	1	2	3	4	5	6	ROADWAY	ITR
1118.80	0	0	0	0	0	0	0	0	1
1119.78	5	5	0	0	0	0	0	0	1
1120.19	10	10	0	0	0	0	0	0	1
1120.54	15	15	0	0	0	0	0	0	1
1120.82	20	20	0	0	0	0	0	0	1
1121.12	25	25	0	0	0	0	0	0	1
1121.37	30	30	0	0	0	0	0	0	1
1121.61	35	35	0	0	0	0	0	0	1
1121.85	40	40	0	0	0	0	0	0	1
1122.08	45	45	0	0	0	0	0	0	1
1122.31	50	50	0	0	0	0	0	0	1
1130.00	78	78	0	0	0	0	0	OVERTOPPING	

SUMMARY OF ITERATIVE SOLUTION ERRORS FILE: CUL148 DATE: 04-07-1994

HEAD ELEV(FT)	HEAD ERROR(FT)	TOTAL FLOW(CFS)	FLOW ERROR(CFS)	% FLOW ERROR
1118.80	0.00	0	0	0.00
1119.78	0.00	5	0	0.00
1120.19	0.00	10	0	0.00
1120.54	0.00	15	0	0.00
1120.82	0.00	20	0	0.00
1121.12	0.00	25	0	0.00
1121.37	0.00	30	0	0.00
1121.61	0.00	35	0	0.00
1121.85	0.00	40	0	0.00
1122.08	0.00	45	0	0.00
1122.31	0.00	50	0	0.00

<1> TOLERANCE (FT) = 0.010 <2> TOLERANCE (%) = 1.000

21/33

G-50

CURRENT DATE: 04-12-1994 FILE DATE: 04-07-1994
CURRENT TIME: 08:56:18 FILE NAME: CUL148

PERFORMANCE CURVE FOR CULVERT # 1 - 1 (4 BY 4) CSP

DIS-CHARGE FLOW (cfs)	HEAD-WATER ELEV. (ft)	INLET CONTROL DEPTH (ft)	OUTLET CONTROL DEPTH (ft)	FLOW TYPE <F4>	NORMAL DEPTH (ft)	CRITICAL DEPTH (ft)	OUTLET VEL. (fps)	OUTLET DEPTH (ft)	TAILWATER VEL. (fps)	TAILWATER DEPTH (ft)
0	1118.80	0.00	0.00	0-NF	0.00	0.00	0.00	0.00	0.00	4.70
5	1119.78	0.98	0.98	3-M1f	0.80	0.62	0.40	4.00	0.00	4.70
10	1120.19	1.28	1.39	3-M1f	1.12	0.91	0.80	4.00	0.00	4.70
15	1120.54	1.55	1.74	3-M1f	1.38	1.12	1.19	4.00	0.00	4.70
20	1120.82	1.81	2.02	3-M1f	1.63	1.31	1.59	4.00	0.00	4.70
25	1121.12	2.05	2.32	3-M1f	1.84	1.47	1.99	4.00	0.00	4.70
30	1121.37	2.27	2.57	3-M1f	2.05	1.62	2.39	4.00	0.00	4.70
35	1121.61	2.49	2.81	3-M1f	2.25	1.75	2.79	4.00	0.00	4.70
40	1121.85	2.69	3.05	3-M1f	2.46	1.88	3.18	4.00	0.00	4.70
45	1122.08	2.89	3.28	3-M1f	2.67	2.01	3.58	4.00	0.00	4.70
50	1122.31	3.09	3.51	3-M1f	2.89	2.11	3.98	4.00	0.00	4.70

El. inlet face invert 1118.80 ft El. outlet invert 1112.00 ft
El. inlet throat invert 0.00 ft El. inlet crest 0.00 ft

***** SITE DATA ***** CULVERT INVERT **********

INLET STATION (FT)	100.00
INLET ELEVATION (FT)	1118.80
OUTLET STATION (FT)	1350.00
OUTLET ELEVATION (FT)	1112.00
NUMBER OF BARRELS	1
SLOPE (V-FT/H-FT)	0.0054
CULVERT LENGTH ALONG SLOPE (FT)	1250.02

***** CULVERT DATA SUMMARY **********

BARREL SHAPE	CIRCULAR
BARREL DIAMETER	4.00 FT
BARREL MATERIAL	CORRUGATED STEEL
BARREL MANNING'S N	0.024
INLET TYPE	CONVENTIONAL
INLET EDGE AND WALL	SQUARE EDGE WITH HEADWALL
INLET DEPRESSION	NONE

CURRENT DATE: 04-12-1994
CURRENT TIME: 08:56:18

FILE DATE: 04-07-1994
FILE NAME: CUL148

TAILWATER

CONSTANT WATER SURFACE ELEVATION
1116.70

ROADWAY OVERTOPPING DATA

ROADWAY SURFACE	GRAVEL
EMBANKMENT TOP WIDTH (FT)	25.00
CREST LENGTH (FT)	50.00
OVERTOPPING CREST ELEVATION (FT)	1130.00

****

FLOOD HYDROGRAPH PACKAGE HEC-1 (IBM-PC 512K VERSION), FEB 1,1985
U.S. ARMY CORPS OF ENGINEERS, THE HYDROLOGIC ENGINEERING CENTER, 609 SECOND STREET, DAVIS, CA. 95616

****

THIS HEC-1 VERSION CONTAINS ALL OPTIONS EXCEPT ECONOMICS, AND THE NUMBER OF PLANS ARE REDUCED TO 3

1 HEC-1 INPUT PAGE 1

```
LINE          ID.......1.......2.......3.......4.......5.......6.......7.......8.......9......10

  1           ID      DETENTION BASIN NO. 1
  2           ID      LOCATION;  WEST OF SR 153, STA 64+75 TO 70+00
  3           ID      100-YEAR, 24-HOUR STORM
  4           ID      FILE NAME: D110024.IN
  5           IT      3. 06APR94      0.    300.
  6           IO      3.      0.

  7           KK    SUB1
  8           KM        RUNOFF FROM SUB-BASIN 1
  9           BA  0.0377
              *       HYPOTHETICAL STORM DISTRIBUTION
 10           PH                    0.72    1.42    2.40    2.64    2.80    3.10    3.45    3.80
 11           LS      0.     82.    12.4
 12           UD    .194

 13           KK    DET1
 14           KM        ROUTE FLOWS THRU PROPOSED DETENTION BASIN 1
 15           KM        TO THE INLET OF THE DRAINAGE SYSTEM THAT
 16           KM        DISCHARGES TO THE SALT RIVER.  FROM INLET TO DISCHARGE,
 17           KM        THE SYSTEM IS COMPRISED OF  3-36" PIPES, A TRAPIZOIDAL
 18           KM        DITCH, AND 3-24" PIPES CONNECTED AT A MANHOLE WITH
 19           KM        A 48" PIPE, WHICH OUTLETS TO THE SALT RIVER.
 20           RS       1    ELEV  1121.9
 21           SV      0.    .033    .884   2.180
 22           SE  1121.9   1122.   1123.   1124.
 23           SQ      0.      .8    11.7    40.4
 24           ZZ
```

1

```
                    DETENTION BASIN NO. 1
                    LOCATION;  WEST OF SR 153, STA 64+75 TO 70+00
                    100-YEAR, 24-HOUR STORM
                    FILE NAME: D110024.IN

  6 IO        OUTPUT CONTROL VARIABLES
                   IPRNT          3  PRINT CONTROL
                   IPLOT          0  PLOT CONTROL
                   QSCAL         0.  HYDROGRAPH PLOT SCALE

    IT        HYDROGRAPH TIME DATA
                    NMIN          3  MINUTES IN COMPUTATION INTERVAL
                   IDATE     6APR94  STARTING DATE
                   ITIME       0000  STARTING TIME
                      NQ        300  NUMBER OF HYDROGRAPH ORDINATES
                  NDDATE     6APR94  ENDING DATE
                  NDTIME       1457  ENDING TIME

              COMPUTATION INTERVAL     .05 HOURS
                   TOTAL TIME BASE   14.95 HOURS

        ENGLISH UNITS


*** *** *** *** *** *** *** *** *** *** *** *** *** *** *** *** *** *** *** *** *** *** *** *** *** *** *** *** *** *** *** *** *** ***


          **************
          *            *
  7 KK    *     SUB1   *
          *            *
          **************
                         RUNOFF FROM SUB-BASIN 1

            SUBBASIN RUNOFF DATA

  9 BA        SUBBASIN CHARACTERISTICS
                   TAREA         .04  SUBBASIN AREA

              PRECIPITATION DATA

 10 PH                              DEPTHS FOR   0-PERCENT HYPOTHETICAL STORM
              ..... HYDRO-35 .....   ............... TP-40 ...............   ........... TP-49 ...........
              5-MIN  15-MIN  60-MIN    2-HR    3-HR    6-HR   12-HR   24-HR   2-DAY   4-DAY   7-DAY  10-DAY
                .72    1.42    2.40    2.64    2.80    3.10    3.45    3.80     .00     .00.    .00     .00

                                                STORM AREA =     .04

 11 LS        SCS LOSS RATE
                   STRTL         .44  INITIAL ABSTRACTION
                  CRVNBR       82.00  CURVE NUMBER
                   RTIMP       12.40  PERCENT IMPERVIOUS AREA

 12 UD        SCS DIMENSIONLESS UNITGRAPH
                    TLAG         .19  LAG
```

***

UNIT HYDROGRAPH
21 END-OF-PERIOD ORDINATES

10.	33.	66.	82.	80.	67.	47.	31.	22.	15.
10.	7.	5.	3.	2.	2.	1.	1.	1.	0.
0.									

*** *** *** *** ***

HYDROGRAPH AT STATION SUB1

TOTAL RAINFALL = 3.56, TOTAL LOSS = 1.51, TOTAL EXCESS = 2.04

	PEAK FLOW	TIME	MAXIMUM AVERAGE FLOW			
			6-HR	24-HR	72-HR	14.95-HR
+	(CFS)	(HR)				
			(CFS)			
+	74.	7.70	8.	3.	3.	3.
		(INCHES)	1.902	2.037	2.037	2.037
		(AC-FT)	4.	4.	4.	4.

CUMULATIVE AREA = .04 SQ MI

*** *

```
            **************
            *            *
 13 KK      *     DET1   *
            *            *
            **************
```

ROUTE FLOWS THRU PROPOSED DETENTION BASIN 1
TO THE INLET OF THE DRAINAGE SYSTEM THAT
DISCHARGES TO THE SALT RIVER. FROM INLET TO DISCHARGE,
THE SYSTEM IS COMPRISED OF 3-36" PIPES, A TRAPIZOIDAL
DITCH, AND 3-24" PIPES CONNECTED AT A MANHOLE WITH
A 48" PIPE, WHICH OUTLETS TO THE SALT RIVER.

HYDROGRAPH ROUTING DATA

20 RS	STORAGE ROUTING			
		NSTPS	1	NUMBER OF SUBREACHES
		ITYP	ELEV	TYPE OF INITIAL CONDITION
		RSVRIC	1121.90	INITIAL CONDITION
		X	.00	WORKING R AND D COEFFICIENT

21 SV	STORAGE	.0	.0	.9	2.2
22 SE	ELEVATION	1121.90	1122.00	1123.00	1124.00
23 SQ	DISCHARGE	0.	1.	12.	40.

26/33

G-55

***

*** *** *** *** ***

HYDROGRAPH AT STATION DET1

PEAK FLOW	TIME		MAXIMUM AVERAGE FLOW			
			6-HR	24-HR	72-HR	14.95-HR
+ (CFS)	(HR)					
		(CFS)				
+ 30.	8.00		8.	3.	3.	3.
		(INCHES)	1.882	2.018	2.018	2.018
		(AC-FT)	4.	4.	4.	4.

PEAK STORAGE	TIME	MAXIMUM AVERAGE STORAGE			
		6-HR	24-HR	72-HR	14.95-HR
+ (AC-FT)	(HR)				
2.	8.00	0.	0.	0.	0.

PEAK STAGE	TIME	MAXIMUM AVERAGE STAGE			
		6-HR	24-HR	72-HR	14.95-HR
+ (FEET)	(HR)				
1123.65	8.00	1122.51	1122.17	1122.17	1122.17

CUMULATIVE AREA = .04 SQ MI

1

RUNOFF SUMMARY
FLOW IN CUBIC FEET PER SECOND
TIME IN HOURS, AREA IN SQUARE MILES

	OPERATION	STATION	PEAK FLOW	TIME OF PEAK	AVERAGE FLOW FOR MAXIMUM PERIOD 6-HOUR	24-HOUR	72-HOUR	BASIN AREA	MAXIMUM STAGE	TIME OF MAX STAGE
+	HYDROGRAPH AT	SUB1	74.	7.70	8.	3.	3.	.04		
+	ROUTED TO	DET1	30.	8.00	8.	3.	3.	.04		
+									1123.65	8.00

*** NORMAL END OF HEC-1 ***

TOTAL EXECUTION TIME = 31. SECONDS

27/37

G-56

****

FLOOD HYDROGRAPH PACKAGE HEC-1 (IBM-PC 512K VERSION), FEB 1,1985
U.S. ARMY CORPS OF ENGINEERS, THE HYDROLOGIC ENGINEERING CENTER, 609 SECOND STREET, DAVIS, CA. 95616

****

THIS HEC-1 VERSION CONTAINS ALL OPTIONS EXCEPT ECONOMICS, AND THE NUMBER OF PLANS ARE REDUCED TO 3

1 HEC-1 INPUT PAGE 1

```
LINE          ID.......1.......2.......3.......4.......5.......6.......7.......8.......9......10

  1           ID     DETENTION BASIN NO. 1
  2           ID     LOCATION;  WEST OF SR 153, STA 64+75 TO 70+00
  3           ID     100-YEAR, 6-HOUR STORM
  4           ID     FILE NAME: D11006.IN
  5           IT     2. 06APR94     0.    300.
  6           IO     3.     0.

  7           KK   SUB1
  8           KM       RUNOFF FROM SUB-BASIN 1
  9           BA  0.0377
              *      HYPOTHETICAL STORM DISTRIBUTION
 10           PH                 0.72    1.42    2.40    2.64    2.80    3.10
 11           LS     0.     82.    12.4
 12           UD    .194

 13           KK   DET1
 14           KM       ROUTE FLOWS THRU PROPOSED DETENTION BASIN 1
 15           KM       TO THE INLET OF THE DRAINAGE SYSTEM THAT
 16           KM       DISCHARGES TO THE SALT RIVER.  FROM INLET TO DISCHARGE,
 17           KM       THE SYSTEM IS COMPRISED OF  3-36" PIPES, A TRAPIZOIDAL
 18           KM       DITCH, AND 3-24" PIPES CONNECTED AT A MANHOLE WITH
 19           KM       A 48" PIPE, WHICH OUTLETS TO THE SALT RIVER.
 20           RS      1    ELEV  1121.9
 21           SV     0.    .033    .884   2.180
 22           SE  1121.9   1122.   1123.   1124.
 23           SQ     0.     .8    11.7    40.4
 24           ZZ
```

1

```
                    DETENTION BASIN NO. 1
                    LOCATION;  WEST OF SR 153, STA 64+75 TO 70+00
                    100-YEAR, 6-HOUR STORM
                    FILE NAME: D11006.IN

  6 IO        OUTPUT CONTROL VARIABLES
                   IPRNT          3  PRINT CONTROL
                   IPLOT          0  PLOT CONTROL
                   QSCAL         0.  HYDROGRAPH PLOT SCALE

  IT          HYDROGRAPH TIME DATA
                    NMIN          2  MINUTES IN COMPUTATION INTERVAL
                   IDATE     6APR94  STARTING DATE
                   ITIME       0000  STARTING TIME
                      NQ        300  NUMBER OF HYDROGRAPH ORDINATES
                 NDDATE     6APR94  ENDING DATE
                 NDTIME       0958  ENDING TIME

              COMPUTATION INTERVAL     .03 HOURS
                   TOTAL TIME BASE    9.97 HOURS

        ENGLISH UNITS


*** *** *** *** *** *** *** *** *** *** *** *** *** *** *** *** *** *** *** *** *** *** *** *** *** *** *** *** *** *** *** *** *** *** **


          **************
          *            *
  7 KK    *     SUB1   *
          *            *
          **************
                         RUNOFF FROM SUB-BASIN 1

            SUBBASIN RUNOFF DATA

  9 BA        SUBBASIN CHARACTERISTICS
                   TAREA        .04  SUBBASIN AREA

              PRECIPITATION DATA

 10 PH                            DEPTHS FOR   0-PERCENT HYPOTHETICAL STORM
              ..... HYDRO-35 .....   ............... TP-40 ...............   ........... TP-49 ...........
              5-MIN  15-MIN  60-MIN    2-HR    3-HR    6-HR   12-HR   24-HR   2-DAY   4-DAY   7-DAY  10-DAY
                .72    1.42    2.40    2.64    2.80    3.10     .00     .00     .00     .00     .00     .00

                                                STORM AREA =     .04

 11 LS        SCS LOSS RATE
                   STRTL        .44  INITIAL ABSTRACTION
                  CRVNBR      82.00  CURVE NUMBER
                   RTIMP      12.40  PERCENT IMPERVIOUS AREA

 12 UD        SCS DIMENSIONLESS UNITGRAPH
                    TLAG        .19  LAG
```

29/37

G-58

***

UNIT HYDROGRAPH
31 END-OF-PERIOD ORDINATES

6.	18.	37.	62.	80.	86.	85.	76.	65.	50.
37.	29.	22.	18.	13.	10.	8.	6.	5.	4.
3.	2.	2.	1.	1.	1.	1.	1.	0.	0.
0.									

*** *** *** *** ***

HYDROGRAPH AT STATION SUB1

TOTAL RAINFALL = 3.10, TOTAL LOSS = 1.44, TOTAL EXCESS = 1.66

PEAK FLOW	TIME		MAXIMUM AVERAGE FLOW 6-HR	24-HR	72-HR	9.97-HR
+ (CFS)	(HR)					
		(CFS)				
+ 69.	3.23		7.	4.	4.	4.
		(INCHES)	1.659	1.661	1.661	1.661
		(AC-FT)	3.	3.	3.	3.

CUMULATIVE AREA = .04 SQ MI

*** **

```
              **************
              *            *
  13 KK       *     DET1   *
              *            *
              **************
```

ROUTE FLOWS THRU PROPOSED DETENTION BASIN 1
TO THE INLET OF THE DRAINAGE SYSTEM THAT
DISCHARGES TO THE SALT RIVER. FROM INLET TO DISCHARGE,
THE SYSTEM IS COMPRISED OF 3-36" PIPES, A TRAPIZOIDAL
DITCH, AND 3-24" PIPES CONNECTED AT A MANHOLE WITH
A 48" PIPE, WHICH OUTLETS TO THE SALT RIVER.

HYDROGRAPH ROUTING DATA

20 RS	STORAGE ROUTING		
	NSTPS	1	NUMBER OF SUBREACHES
	ITYP	ELEV	TYPE OF INITIAL CONDITION
	RSVRIC	1121.90	INITIAL CONDITION
	X	.00	WORKING R AND D COEFFICIENT

21 SV	STORAGE	.0	.0	.9	2.2
22 SE	ELEVATION	1121.90	1122.00	1123.00	1124.00
23 SQ	DISCHARGE	0.	1.	12.	40.

30/39

G-59

***

*** *** *** *** ***

HYDROGRAPH AT STATION DET1

PEAK FLOW	TIME		MAXIMUM AVERAGE FLOW			
			6-HR	24-HR	72-HR	9.97-HR
+ (CFS)	(HR)					
		(CFS)				
+ 27.	3.57		7.	4.	4.	4.
		(INCHES)	1.639	1.661	1.661	1.661
		(AC-FT)	3.	3.	3.	3.

PEAK STORAGE	TIME	MAXIMUM AVERAGE STORAGE			
		6-HR	24-HR	72-HR	9.97-HR
+ (AC-FT)	(HR)				
2.	3.57	0.	0.	0.	0.

PEAK STAGE	TIME	MAXIMUM AVERAGE STAGE			
		6-HR	24-HR	72-HR	9.97-HR
+ (FEET)	(HR)				
1123.54	3.57	1122.44	1122.23	1122.23	1122.23

CUMULATIVE AREA = .04 SQ MI

1

RUNOFF SUMMARY
FLOW IN CUBIC FEET PER SECOND
TIME IN HOURS, AREA IN SQUARE MILES

	OPERATION	STATION	PEAK FLOW	TIME OF PEAK	AVERAGE FLOW FOR MAXIMUM PERIOD 6-HOUR	24-HOUR	72-HOUR	BASIN AREA	MAXIMUM STAGE	TIME OF MAX STAGE
+	HYDROGRAPH AT	SUB1	69.	3.23	7.	4.	4.	.04		
+	ROUTED TO	DET1	27.	3.57	7.	4.	4.	.04		
+									1123.54	3.57

*** NORMAL END OF HEC-1 ***

TOTAL EXECUTION TIME = 26. SECONDS

Conclusions: • The 100-year peak inflows computed by the two methods are as follows

Method	Q100 Inflow
Rational	76 cfs
HEC-1 (24hour storm)	74 cfs
HEC-1 (6 hour storm)	69 cfs

From these values, it can be concluded that the 100-year peak discharge modelled by the HEC-1 method is fairly reliable.

• The 100-year data for detention basin no. 1 are

Storm	Inflow	Outflow	Volume	Stage
24-hour	74 cfs	30 cfs	2 A-F	1123.65 msl
6-hour	69 cfs	27 cfs	2 A-F	1123.54 msl

The higher stage is produced by the 24-hour storm duration and therefore 1123.65 will be reported as the stage.

BRW

Job SK 153 Drainage Sheet No.
Made By D. Schaub Date 4/12/94 Job No.
Checked By H. Graf Date 4/14/94 Sec. Sht. No. 32/33
Calculations For Detention Basin No. 1

• The low pavement elevation of Ramp C is 1124.85 at station 13+26, which is 1.20' above the 100-year, 24 hour stage for detention basin #1.

BRW

Job SR 153 Drainage Sheet No.
Made By D. Schaub Date 4/12/94 Job No.
Checked By G. Gout Date 4/14/94 Sec. Sht. No. 33/33
Calculations For Detention Basin NO. 1

Appendix H
Cross Culvert Calculations

ARIZONA DEPARTMENT OF TRANSPORTATION

CULVERT COMPUTATION RECORD

PROJECT: SR 153

STATION: 118+00 Ramp C

DESIGNER: D. Schaub GAG 1/19/94

DATE: 1/19/94

HYDROLOGIC AND CHANNEL INFORMATION

DRAINAGE AREA _____

Q_1 = _____ TW_1 = _____

Q_2 = _____ TW_2 = _____

CB107 Q10 = 1.14 cfs

median Q10 = CIA = 0.70 (4.3)(4.31) = 12.9 cfs

Q_T = 1.14 + 12.9 = 14.0 cfs ①

(Q_1 = DESIGN DISCHARGE, SAY Q_{25})
(Q_2 = CHECK DISCHARGE, SAY Q_{50})

SKETCH

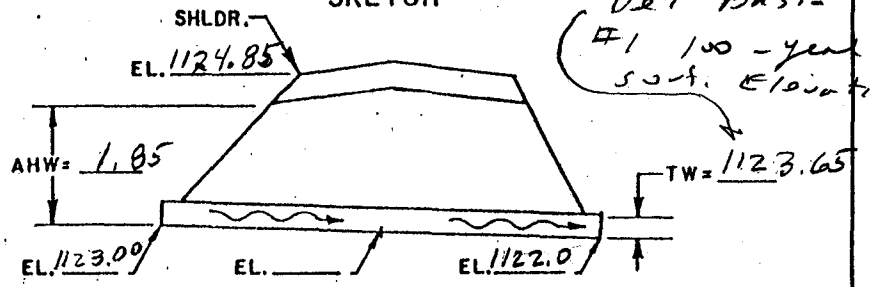

Det Basin #1 100-year surf. Elevation.

S_0 = _____ L = 85 L/100 S_0 = _____

MEAN STREAM VELOCITY = _____

CULVERT DESCRIPTION		Q	CAP. CHART HW	HEADWATER COMPUTATION										CONTROL HW	OUTLET VELOCITY	COST	DHW ELEV.	COMMENTS
				INLET CONT.		OUTLET CONTROL $HW = H + h_o - LS_o$												
SIZE	ENTR. TYPE			HW/D	HW	K_e	H	d_c	$\frac{d_c + D}{2}$	TW	H_o	LS_o	HW					
24"	Flared End	14.0			2.13								2.13	2.13 ②	8.6		1123.65 ②	Use 24"
		②	Actual		head		of		pipe		will		be		substantially			
			less		than		the		computed		due		to		available			
			median		storage.		Attached		calculations									
			indicate		that		the		100-year		can		be		stored			
			with		a		stage		of		1124.39.		An		equalized water			

SUMMARY & RECOMMENDATIONS surface will give an elevation of 1123.65.

① Assume Q_T = 14.0 cfs enters at the inlet end.

1-H 5/11

20-4403 12/74

• STAGE-VOLUME CALCULATIONS

STAGE	Δh	SURFACE AREA		STORAGE VOL.	
		@ STAGE	AVE.	INCR.	ACC.
MSL	ft	S.F.	S.F.	A-F	A-F
1123.00		0			0
	1.0		23,750.	0.55	
1124.00		47500*			0.55
	0.95		47500	1.09	
1124.95		47500*			1.64
					1.64
			TOTAL	1.64	

* Approx. Surf. Area.

• V of 100-year Runoff

$CI = 0.27 + .70 \times 4.3 = 3.3$ Acres

$V_{100} = 3.3 \times 3.8/12 = 1.05$ A-F $\simeq$ 1124.39

$V_{10} = 3.3 \times 2.4/12 = 0.66$ A-F $\simeq$ 1124.09

BRW

Job SR 153 Sheet No.

Made By D. Schaub Date 4/15/94 Job No.

Checked By G Goff Date 4/15/94 Sec. Sht. No. 2.5

Calculations For Detention Basin No. 2

CURRENT DATE: 04-15-1994
CURRENT TIME: 13:31:03

FILE DATE: 04-15-1994
FILE NAME: CULC

FHWA CULVERT ANALYSIS
HY-8, VERSION 4.1

CULV	SITE DATA			CULVERT SHAPE, MATERIAL, INLET				
	INLET ELEV. (FT)	OUTLET ELEV. (FT)	CULVERT LENGTH (FT)	BARRELS SHAPE MATERIAL	SPAN (FT)	RISE (FT)	MANNING n	INLET TYPE
1	1123.00	1122.00	85.01	1 RCP	2.00	2.00	.012	CONVENTIONAL
2								
3								
4								
5								
6								

SUMMARY OF CULVERT FLOWS (CFS) FILE: CULC DATE: 04-15-1994

ELEV (FT)	TOTAL	1	2	3	4	5	6	ROADWAY	ITR
1123.65	0	0	0	0	0	0	0	0	1
1123.75	3	3	0	0	0	0	0	0	1
1124.18	6	6	0	0	0	0	0	0	1
1124.52	8	8	0	0	0	0	0	0	1
1124.82	11	11	0	0	0	0	0	0	1
1125.13	14	14	0	0	0	0	0	0	1
1125.28	17	15	0	0	0	0	0	2	9
1125.34	20	16	0	0	0	0	0	4	5
1125.39	22	16	0	0	0	0	0	6	5
1125.44	25	17	0	0	0	0	0	9	4
1125.48	28	17	0	0	0	0	0	11	4
1125.20	15	15	0	0	0	0	0	OVERTOPPING	

SUMMARY OF ITERATIVE SOLUTION ERRORS FILE: CULC DATE: 04-15-1994

HEAD ELEV(FT)	HEAD ERROR(FT)	TOTAL FLOW(CFS)	FLOW ERROR(CFS)	% FLOW ERROR
1123.65	0.00	0	0	0.00
1123.75	0.00	3	0	0.00
1124.18	0.00	6	0	0.00
1124.52	0.00	8	0	0.00
1124.82	0.00	11	0	0.00
1125.13	0.00	14	0	0.00
1125.28	-0.00	17	0	0.66
1125.34	-0.00	20	0	0.91
1125.39	-0.00	22	0	0.49
1125.44	-0.00	25	0	0.71
1125.48	-0.00	28	0	0.53

<1> TOLERANCE (FT) = 0.010 <2> TOLERANCE (%) = 1.000

3/5

H-3

CURRENT DATE: 04-15-1994 FILE DATE: 04-15-1994
CURRENT TIME: 13:31:03 FILE NAME: CULC

PERFORMANCE CURVE FOR CULVERT # 1 - 1 (2 BY 2) RCP

DIS-CHARGE FLOW (cfs)	HEAD-WATER ELEV. (ft)	INLET CONTROL DEPTH (ft)	OUTLET CONTROL DEPTH (ft)	FLOW TYPE <F4>	NORMAL DEPTH (ft)	CRITICAL DEPTH (ft)	OUTLET VEL. (fps)	OUTLET DEPTH (ft)	TAILWATER VEL. (fps)	TAILWATER DEPTH (ft)
0	1123.65	0.00	0.65	0-NF	0.00	0.00	0.00	0.00	0.00	1.65
3	1123.75	0.75	0.75	1-S2n	0.43	0.58	5.55	0.44	0.00	1.65
6	1124.18	1.18	1.18	1-S2n	0.62	0.83	6.76	0.62	0.00	1.65
8	1124.52	1.52	1.52	1-S2n	0.77	1.03	7.41	0.78	0.00	1.65
11	1124.82	1.82	1.82	1-S2n	0.90	1.20	7.93	0.92	0.00	1.65
14	1125.13	2.13	2.13	5-S2n	1.03	1.34	8.59	1.03	0.00	1.65
15	1125.27	2.27	2.27	5-S2n	1.08	1.40	8.76	1.08	0.00	1.65
16	1125.33	2.33	2.33	5-S2n	1.10	1.43	8.83	1.10	0.00	1.65
16	1125.39	2.39	2.39	5-S2n	1.12	1.44	8.89	1.12	0.00	1.65
17	1125.43	2.43	2.43	5-S2n	1.14	1.46	8.93	1.14	0.00	1.65
17	1125.48	2.48	2.48	5-S2n	1.15	1.47	8.97	1.15	0.00	1.65

El. inlet face invert 1123.00 ft El. outlet invert 1122.00 ft
El. inlet throat invert 0.00 ft El. inlet crest 0.00 ft

***** SITE DATA ***** CULVERT INVERT **********

INLET STATION (FT)	100.00
INLET ELEVATION (FT)	1123.00
OUTLET STATION (FT)	185.00
OUTLET ELEVATION (FT)	1122.00
NUMBER OF BARRELS	1
SLOPE (V-FT/H-FT)	0.0118
CULVERT LENGTH ALONG SLOPE (FT)	85.01

***** CULVERT DATA SUMMARY **********

BARREL SHAPE	CIRCULAR
BARREL DIAMETER	2.00 FT
BARREL MATERIAL	CONCRETE
BARREL MANNING'S N	0.012
INLET TYPE	CONVENTIONAL
INLET EDGE AND WALL	SQUARE EDGE WITH HEADWALL
INLET DEPRESSION	NONE

4/5

H-4

CURRENT DATE: 04-15-1994
CURRENT TIME: 13:31:03

FILE DATE: 04-15-1994
FILE NAME: CULC

TAILWATER

CONSTANT WATER SURFACE ELEVATION
1123.65

ROADWAY OVERTOPPING DATA

ROADWAY SURFACE	PAVED
EMBANKMENT TOP WIDTH (FT)	40.00
CREST LENGTH (FT)	25.00
OVERTOPPING CREST ELEVATION (FT)	1125.20

Appendix I
Hydraulic Charts

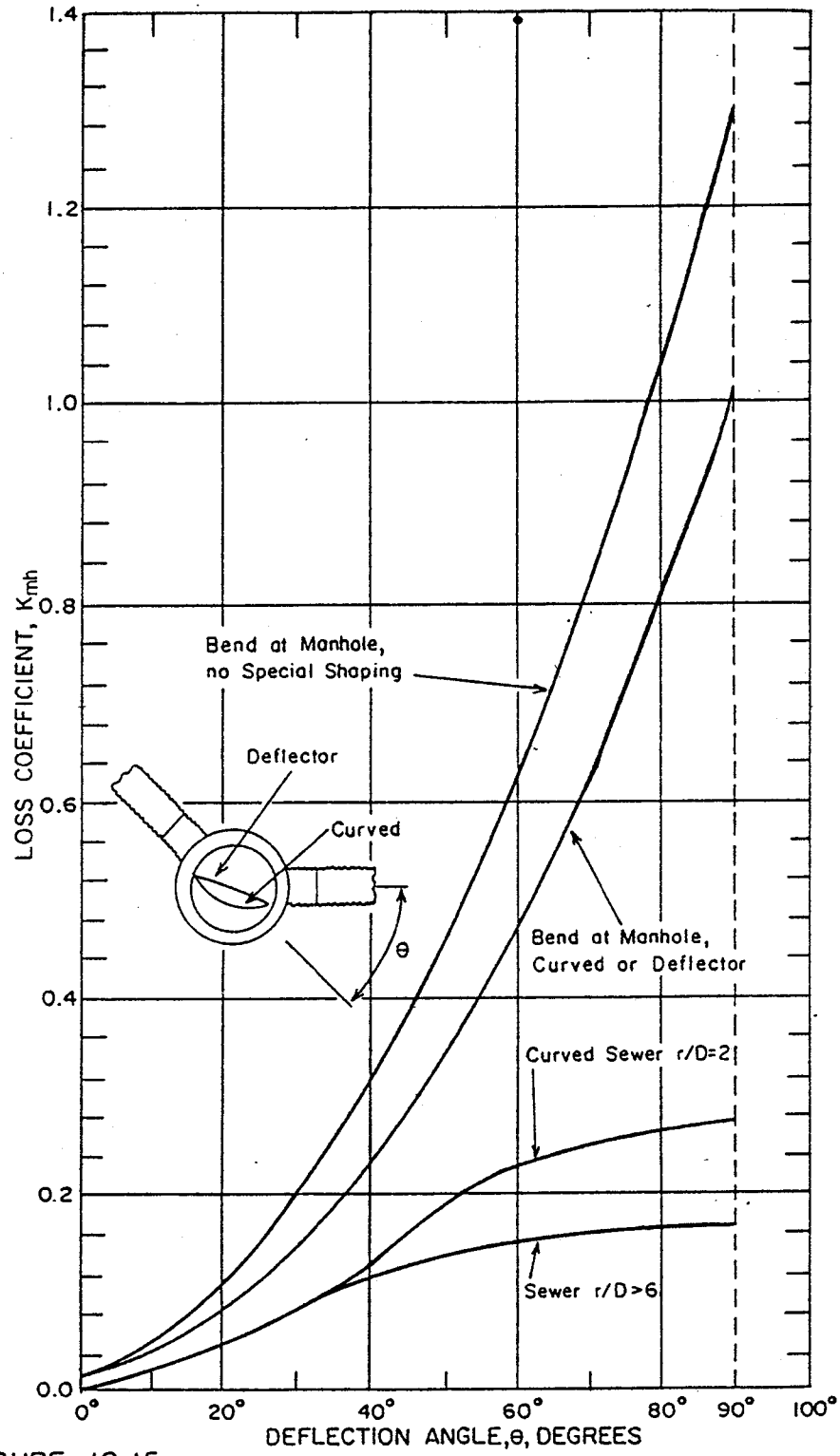

FIGURE 10.15
MANHOLE HEAD LOSS

SOURCE: "STANDARDS MANUAL FOR DRAINAGE DESIGN AND FLOODPLAIN MANAGEMENT," CITY OF TUCSON, December 1989

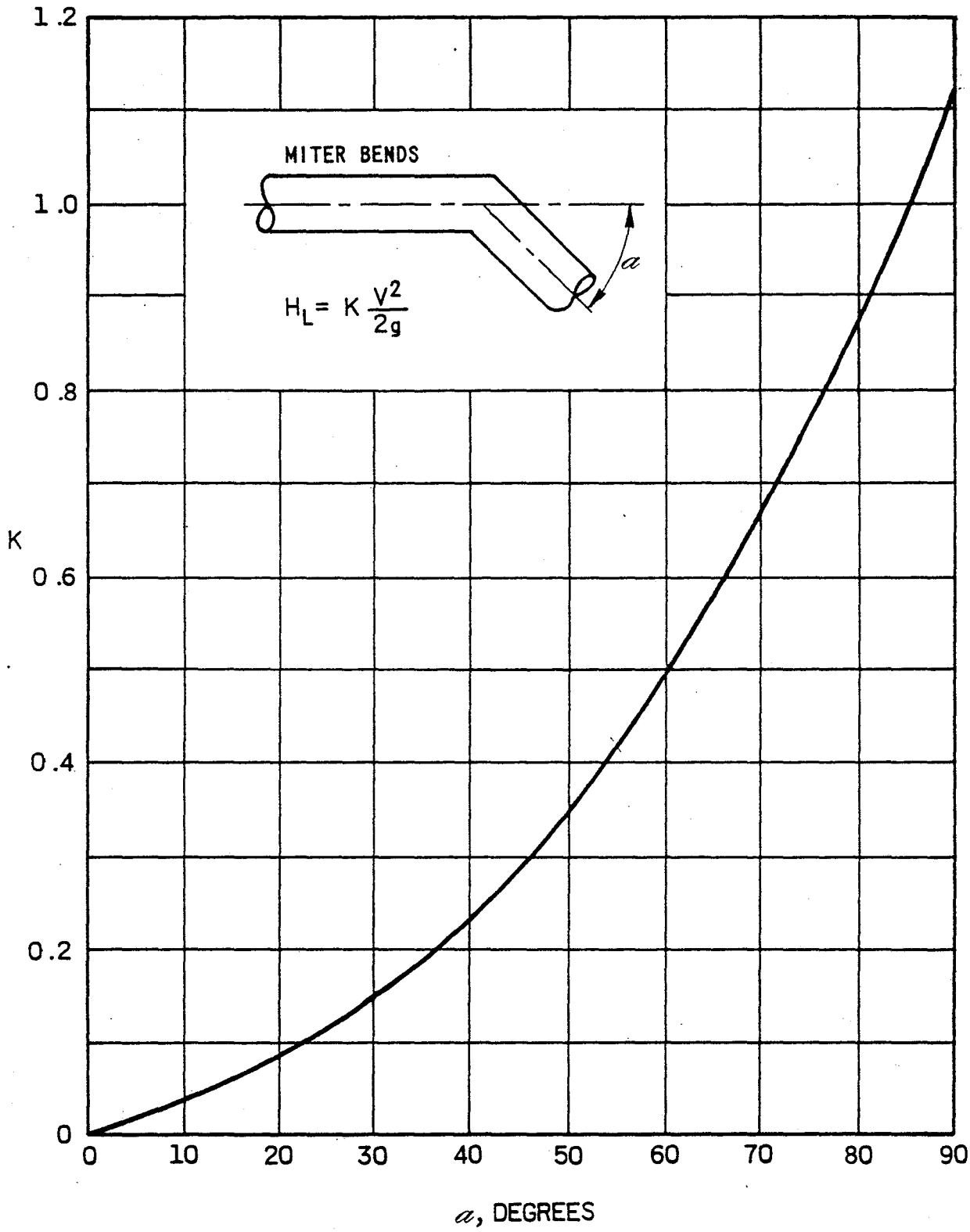

LOSS COEFFICIENTS FOR MITER BENDS

SOURCE: WIS. CONCRETE PIPE ASSOC., CURVILINEAR ALIGNMENTS FOR SEWERS

For head losses at junctions due to changes in flow direction and the collision and turbulence of flows in manholes, refer to Section 5.10 of FHWA's publication "Design of Urban Highway Drainage, the State of the Art," 1979. For manhole design these losses shall be considered as required by the manhole structure characteristics. For manholes with square edge pipes at the junction, the sudden enlargement loss coefficient may be up to 1.0 and the entrance loss coefficient may be up to 0.5. For headwater computation of culverts, see Section 3.7-6 Culverts.

3. Manning's Roughness Coefficient

The following table gives Manning's roughness coefficients, which are recommended for design:

Surface	Manning's "n"
Pavement	0.016
Concrete pipe, precast	0.012
Concrete pipe, cast-in-place	0.015
Corrugated metal pipe*	0.024
Cast-iron pipe	0.013
Steel pipe	0.011
Concrete lining channel	0.018
Earth ditch	0.020
Reinforced concrete box culvert	0.013
Gunite or shotcrete	0.018
Aggregate lining ditch	$n = 0.031\ (d_{75})^{0.1667}$

d_{75} = The particle size in feet for which 75 percent of sediment mixture is finer.

* Does not include Structural Plate CMP. For more detailed information see FHWA-TS-80-216 "Hydraulic Flow Resistance Factors for Corrugated Metal Conduits", Figures 6, 7, 8, and 9.

Appendix J
Report on the Effects of Scour

B R W

B R W INC.

Planning
Transportation
Engineering
Urban Design

2700 No. Central Ave.
Suite 1000
Phoenix,
AZ 85004
602/234-1591
Fax 602/230-9189

Denver
Milwaukee
Minneapolis
Orlando
Phoenix
Portland
San Diego
Seattle

Donald W. Ringrose
Richard P. Wolsfeld
Thomas F. Carroll
Craig A. Amundsen
Donald E. Hunt
John B. McNamara
Richard D. Pilgrim
Dale N. Beckmann
Jeffery L. Benson
Ralph C. Blum
Gary J. Erickson
John C. Lynch
Paul N. Bay
Sabri Ayaz
Gary A. Ehret
Anthony Heppelmann
Arijs Pakalns
Martha McPhee
Howard P. Preston
Dennis P. Probst

January 17, 1994

Mr. Terry Bourland
Project Manager
Arizona Department of Transportation
Statewide Project Management
205 South 17th Avenue, Room 216E
Mail Drop 614E
Phoenix, Arizona 85007

Re: SR 153 – Sky Harbor Expressway
Contract No. 93–28
153 MA 3 H 3315 01D
Relocation of Existing Sanitary Sewer Siphon

Dear Mr. Bourland:

At a progress meeting, it was requested that BRW investigate the possibility of relocating the existing (48" and 18") sanitary sewer siphon to an alignment located between the SR 153 and SR 143 bridges. This alignment would allow utilizing, as much as possible, some elements of the existing facilities located outside the existing Salt River levees. The attached plan sheet shows a proposed alignment between the bridges which, while it crosses the column induced scour zones of influence, it does so at the fringes of the scour cones. As shown on the attached profile sheet, the effects of both general and local scour from the columns approximately equal general streambed scour at the proposed relocated sewer crossing.

The City of Tempe has been contacted regarding sewer line sizes. Based on the City's anticipated needs, their preliminary estimate is that a two–pipe siphon with minimum line sizes of 18" and 24" would be required, but they would prefer a three–pipe siphon with minimum line sizes of 15", 18", and 24". Based on a current peak flow rate from the City of Tempe and a future peak flow rate from the City of Phoenix, preliminary siphon calculations by BRW indicate that a two–pipe siphon with minimim line sizes of 24" and 18" would be required. The 24" pipe is required for current flows from the City of Tempe and the additional 18" pipe is required for future flows from the City of Phoenix.

BRW's preliminary siphon design was based on a current peak daily flow rate of 2.52 MGD recorded by the City of Tempe in August 1993 and an additional peak daily flow rate of 1.5 MGD requested by the City of Phoenix in December 1993. The future peak daily flow rate would be 4.02 MGD. Using a 1.6 ratio for a peak hourly flow rate to the peak daily flow rate, the current and future peak hourly flow rates are 6.25 cfs and 9.96 cfs, respectively. To maintain uniform flow conditions in the main sanitary sewer (defined as the same flow depth upstream and downstream of the siphon in order to avoid an undesirable backwater), a 24" pipe is required for current peak flows and an additional 18" pipe is required for future peak flows. The peak flow velocities will be 1.99 fps for the 24" pipe and 2.10 fps for the 18" pipe. It is desirable that the flow in the primary barrel reach a velocity of 2 to 3 fps at least once a day. On low flow months, the barrel velocity may be as low as 1.4 fps with the 24" pipe, but switching to the 18" pipe would raise the barrel velocity to 2.5 fps.

The proposed new alignment, starting south of the river, would begin at the north end of the existing south siphon inlet structure and end at the existing 48" sanitary sewer just southeast of the existing 48"/72" junction structure. New facilities would consist of three junction structures, one at each end connection point and one mid-stream; two or three siphon pipes across the river; a north siphon outlet structure; one 48" pipe from the siphon structure to the north end of the new alignment. Existing facilities to be abandoned would consist of the 48" and 18" pipes across the river, the north siphon outlet structure, and the 48" pipe between the siphon structure and the new north junction structure. The end junction structures would be designed to shunt the flows from the existing siphon system to the new system after the completion of the new system.

At the north bank, the 48" sewer line discharging from the new siphon outlet structure would be installed in a northwest direction to rejoin the old 48" line with a new junction structure. An alternative alignment toward the north to connect with an existing 72" line would result in a shorter length of new 48" pipe. However, this alternative was dismissed as not feasible because of adverse flow line grades.

The new siphon pipes would be installed through the existing levees by using a horizontal bore to minimize damage to the existing levee banks. Discussions with a contractor indicate that a minimum bore diameter of 42" should be used in the Sand, Gravel and Cobble material. The bore hole space remaining between the new siphon pipes and the existing levee banks would be grouted with a concrete mixture. These bore holes would penetrate the levee below both the existing hard bank toedowns and the proposed hard bank toedowns for the new SR 153 bridge. Therefore, no additional toedown protection would be required at the new siphon location.

Preliminary construction costs were calculated for two siphon alternatives, both utilizing the alignment as presented on the attached plan sheet. Alternative one uses the three pipe system across the Salt River and alternative two uses the two pipe system. Our estimated construction costs for these two replacement alternatives are:

- Three Pipe Siphon System – $994,820.
- Two Pipe Siphon System – $825,960.

These replacement costs are substantially less than the estimated costs to protect the existing siphon lines presented in our "REPORT ON THE EFFECTS OF SCOUR." The two protection options along with estimated costs, as presented in our scour report, are:

- Excavation and Slurry Wall – $1,970,000.
- Tangent Drilled Shaft – $2,870,000.

At a previous meeting, a third protection option, the possibility of using split pipe sleeves, was suggested as a means of protecting the existing siphon pipes from scour. Under the worst condition, however, most of the existing pipes would be completely undercut by scour created by the bridge columns. In order to prevent damage to the pipe, it would have to be supported to carry not only its own weight, but also the lateral hydraulic force. Such a support system would be very expensive and its constructibility would be questionable.

Based on the cost differences between replacing and protecting the existing lines, we recommend that the sewer be relocated. Please contact us if additional information is required regarding the proposed relocation of the existing (48" and 18") sanitary sewer siphon. We would like a decision soon so that the design of the new line can coincide with the 95% submittal.

Sincerely,
BRW, Inc.

Robert Mongrain, PE
Project Manager

Attachments

c: Dan Lance – ADOT/Dist. I
Jim Carroll – COP/Aviation Dept.
Bob Bortfeld – COP/Street Transportation Dept.
Jerry Arakaki – COP/Water & Wastewater Dept.
Tom Ankeny – COT/Engineering

DS/PM/33–L10/SIPHON.DS

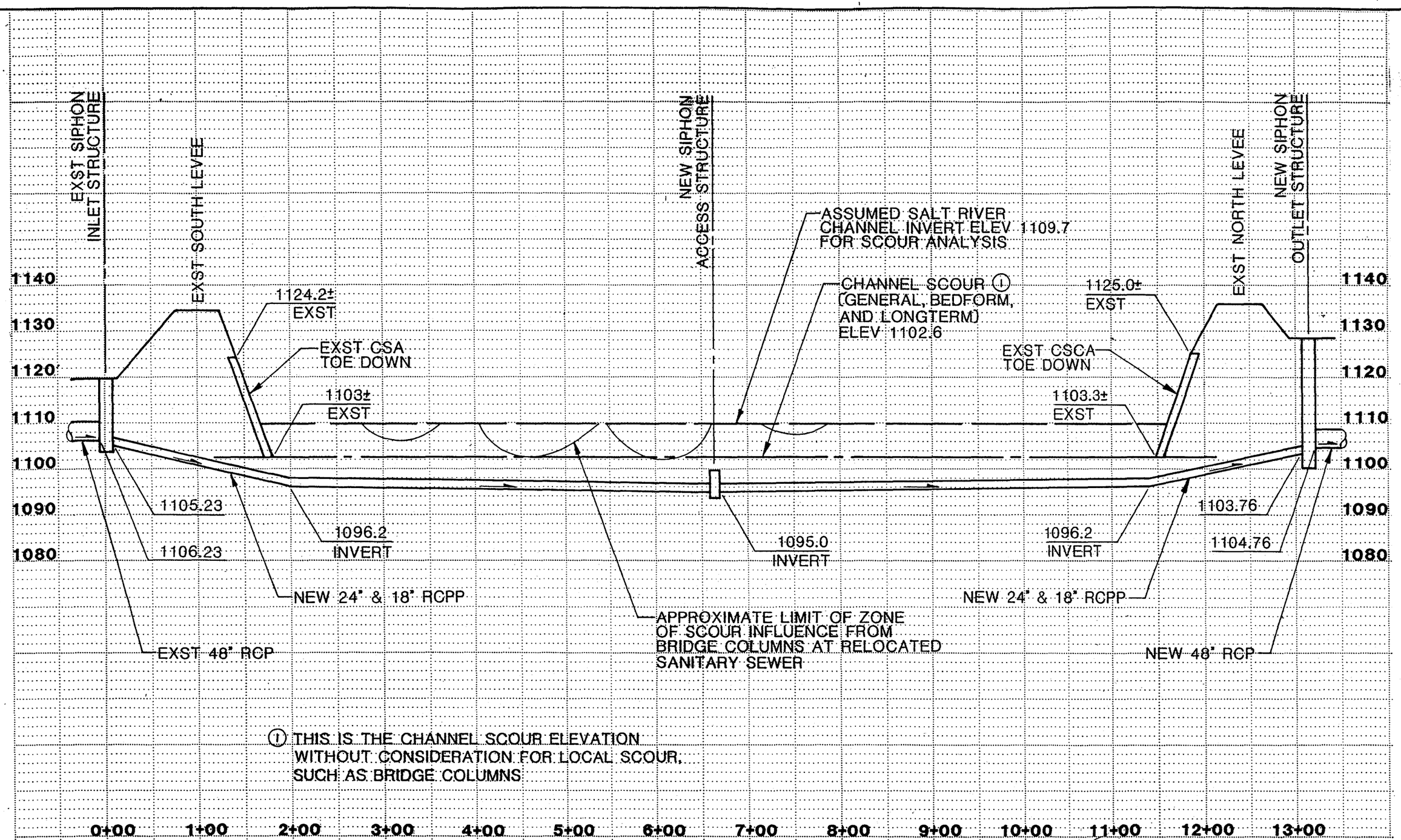

FIGURE 2
PROFILE RELOCATED SANITARY SEWER SIPHON

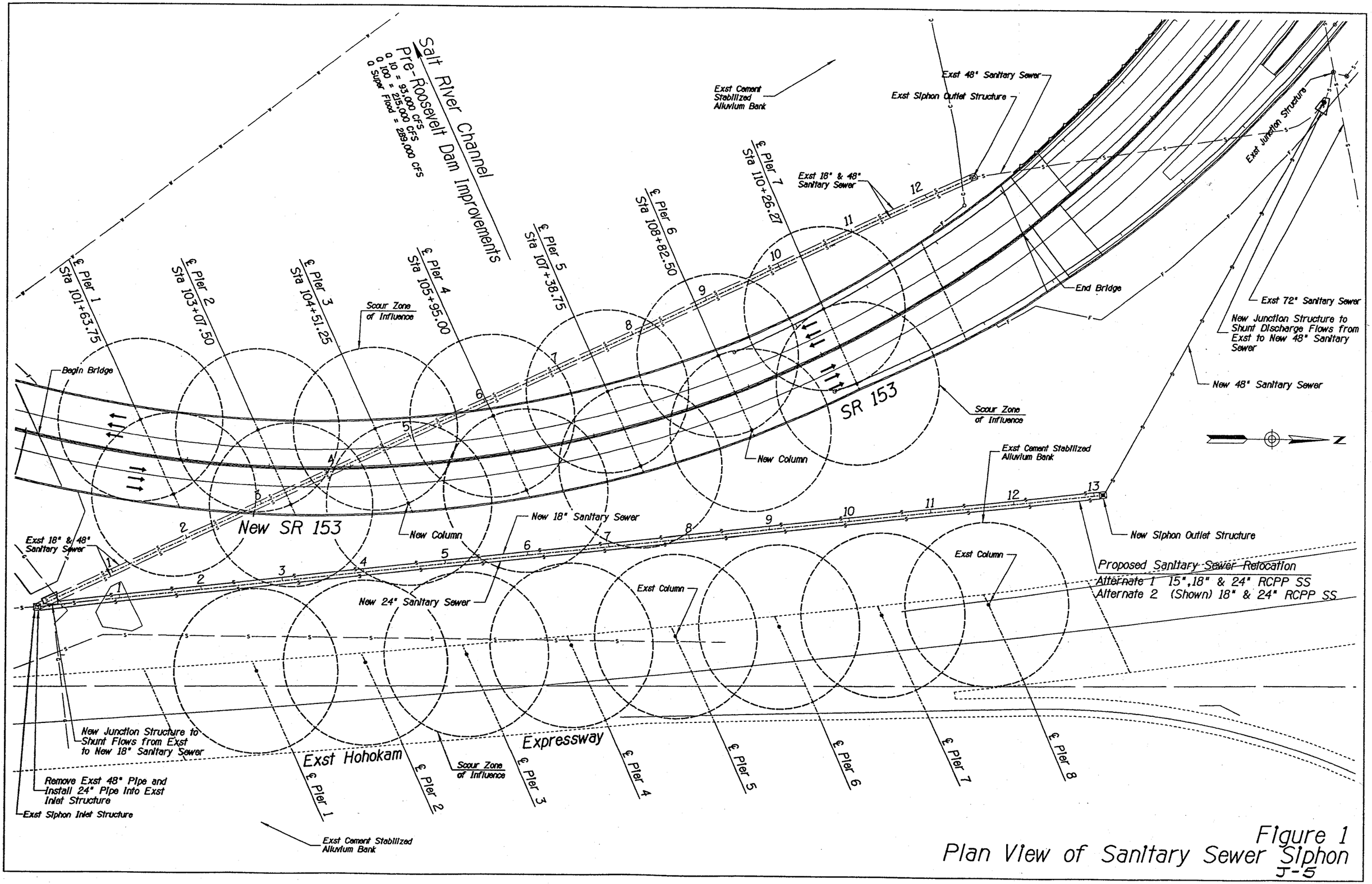

Figure 1
Plan View of Sanitary Sewer Siphon

REPORT ON THE EFFECTS OF SCOUR

SR 153 – Sky Harbor Expressway
Contract No. 93–28
153 MA 3 H 3315 01D
ADOT Project No. HDP–920–5(001)
BRW Project No. 1956
14 sept. 1993

This report documents the construction measures and costs required to mitigate the anticipated scour effects within the Salt River Channel by locating the SR 153 Sky Harbor Expressway Bridge 300 feet west of the existing SR 143 Hohokam Expressway Bridge. Construction of the Salt River Channelization Project including the CSA hardbank toe–down and utility crossing relocations has been completed based on the assumption that the new SR 153 Bridge would be located 880 feet west of the existing SR 143 Bridge. At the currently proposed SR 153 Bridge location, the zone of influence of local scour for the pier columns will be below both the existing CSA bank toe–downs and a sanitary sewer siphon located approximately 380 feet west of the existing SR 143 Bridge. We recommend that the CSA hardbank toe–downs be extended to an elevation below the scour zone of influence with a curtain wall (excavate and form) and that the sanitary sewer line be relocated to the west of the new SR 153 Bridge. Total preliminary construction and design costs are estimated at $1,679,000; $372,700 for the curtain wall, and $1,306,300 for the sanitary sewer relocation.

The existing bank protection extends approximately 10 feet into the ground below the channel invert to protect against general scour during the superflood. At the bridge sites, the zone of influence of local scour for the first columns next to the banks resulted in the CSA toe–down being extended an additional 10 feet for a total of 20 feet below the channel invert.

A new sanitary sewer siphon consisting of 48 inch and 18 inch concrete pipes was located approximately 380' west of the Hohokam Expressway. At this location, the pipes were out of the zone of influence resulting from the local scour at the columns and the line needed to be protected only for the anticipated general scour. The siphon's invert was placed approximately 15 feet below the planned channel invert elevation.

Subsequent to the completion of the relocated Salt River Channel, SR 143, the major utility relocations, and a substantial portion of SR 153, the City of Phoenix Aviation Department requested that ADOT undertake a realignment study of SR 153 with the goal of providing additional land for future Sky Harbor development. Upon completion of that study, the Aviation Department selected a new alignment as the basis for redesigning the SR 153 Project. With this new alignment the bridge will cross the Salt River only 300 feet west of the Hohokam Expressway and will conflict with the sanitary sewer line for a portion of its length (See Figures 1 & 2). The realignment also places the abutments where the toe–down extension of the existing levees is only 10 feet.

A hydraulics analysis incorporating the new bridge location was performed to determine the effects of scour on the columns, hard bank, and the sanitary sewer. The results show that general scour, combined with bedform scour and long term scour, is approximately 6.6 feet for the 100 year event (215,000 cfs) and 7.1 feet for the superflood (289,000 cfs). At the bridge, however, the addition of the columns local scour effects results in a maximum total scour depth of 34.8 feet for the 100 year event and 37.2 feet for the superflood.

A scour zone of influence radiating from each column at a 2.8:1 slope from the Superflood scour depth of 37.2 feet (See Figure 3) was used in determining the hydrological effects on the banks and sewer line. According to this analysis, both the north and south banks are impacted (See Figures 4 and 5) as well as the portion of the sewer line located within the channel (See Figure 6).

The SR 153 realignment, therefore, produces two concerns: 1) protecting the permanent hard banks and 2) whether to protect the sewer line at its current location or relocate it. Various options along with possible costs were discussed with representatives from Thomas-Hartig and Associates, Case International Company, and Subsoil Dewatering.

Protection options considered for both the hard banks and the sewer line included:

1. Sheet Piling
2. Diaphragm Walls
3. Tangent Drilled Shafts
4. Excavating to Form a Wall

All of the protection options would extend approximately five to 10 feet below the local and general scour lines, stopping at the general scour elevation. The protection would have to be constructed in the SGC material and would be placed in an area in which the water table is within five feet of the surface. Since the subsurface material is coarse and water flow is substantial, a wellpoint method of dewatering must be used if excavation is required. Discussions on each construction option follows:

1. Sheet Piling: This option was eliminated because of the physical impossibility of driving sheet piling through the SGC material.

2. Diaphragm Walls (Slurry Wall): While the slurry trench method of excavation has been utilized in SGC material in the past, there are a number of impediments to the use of this technique including:

- a high cost factor,
- difficulty excavating in the SGC material resulting in the requirement for a wide trench.

In particular, at the SR 153 bridge site, the upper twenty feet of the channel is composed of very coarse, loose material that, in a slurry trench application would likely result in a significant loss of slurry and a significant sloughing of the side walls. According to a representative from Case International, the top twenty feet or so of the trench would have to be excavated with laid-back slopes before construction of the slurry trench could begin.

Therefore, using the diaphragm wall as bank protection becomes impractical because 20 feet is close to the bottom of the required wall and that it precludes using slurry trench construction. However, the diaphragm wall would still be a viable option for protecting the sewer line since the walls must be deeper and the cost of dewatering 40 feet for an open excavation would be prohibitive. The site would be excavated to a depth of 15 to 20 feet below the surface before the slurry walls would be constructed.

3. Drilled Shaft: The tangent drilled shaft alternative provides a solution which eliminates the need to excavate and dewater a trench, and local contractors have experience with drilled shaft construction. The concern about constructing a continuous line of drilled shafts in SGC material is the possibility of irregular sides. There may be times when the contractor would be drilling through the concrete from previous pours.

4. Excavation (Formed Wall): The bottom of the required protection at the banks is estimated to be between 25 and 29 feet below the channel invert. According to our geotechnical subconsultant, the bank slope would be stable provided the excavation at the face of the CSA was vertical and did not undercut the slope. A system for protecting the vertical cut such as soldier piles and lagging would be recommended. The other side of the excavation could be laid back. The excavation for the sewer line would extend down approximately 15 to 20 feet with the sides of the excavation being laid back.

Preliminary construction and design cost estimates have been prepared for each of the three viable construction options for both protection of banks and the sanitary sewer line. Cost estimates for relocating the sewer line were based on the existing line's cost when it was built during Project RAM-600-3-511 (Segment 2A). Two relocation costs were calculated, one for a replacement in kind, and the other for two 18 inch pipes. The City of Tempe has suggested that the 48" line is oversized. The actual size of the pipes would be determined during final design. Although the water table may be lower during construction of this project, the cost of dewatering was estimated based on the water table being five feet below the existing channel invert. Copies of the calculations for preliminary quantities and costs are attached to this Memorandum. The cost estimates are as follows:

PROTECTION OF BANKS:

	Est. Const. Cost	Est. Design Cost	Total Cost
Slurry Wall			NA
Drilled Shafts	$ 555,000	$ 34,000	$ 589,000
Excavation (Formed Wall)	$ 351,600	$ 21,100	$ 372,700

Based on the estimated construction and design costs, we recommend that the excavation method be used to build a curtain wall (excavate and form) to extend the CSA hard banks to an elevation below the scour zone of influence.

SANITARY SEWER LINE:

	Est. Const. Cost	Est. Design Cost	Total Cost
Excavation (Formed Wall) & Slurry Wall	$ 1,970,000	$ 118,200	$ 2,088,200
Drilled Shafts	$ 2,870,300	$ 172,200	$ 3,042,500
Relocation (In Kind)	$ 1,232,300	$ 74,000	$ 1,306,300
(2-18" pipes)	$ 1,057,500	$ 63,500	$ 1,121,000

Based on the preliminary costs, we recommend that the sanitary sewer line be relocated to the west of SR 153.

Attachments

CS/PM/33-MS8/SCOUR.153

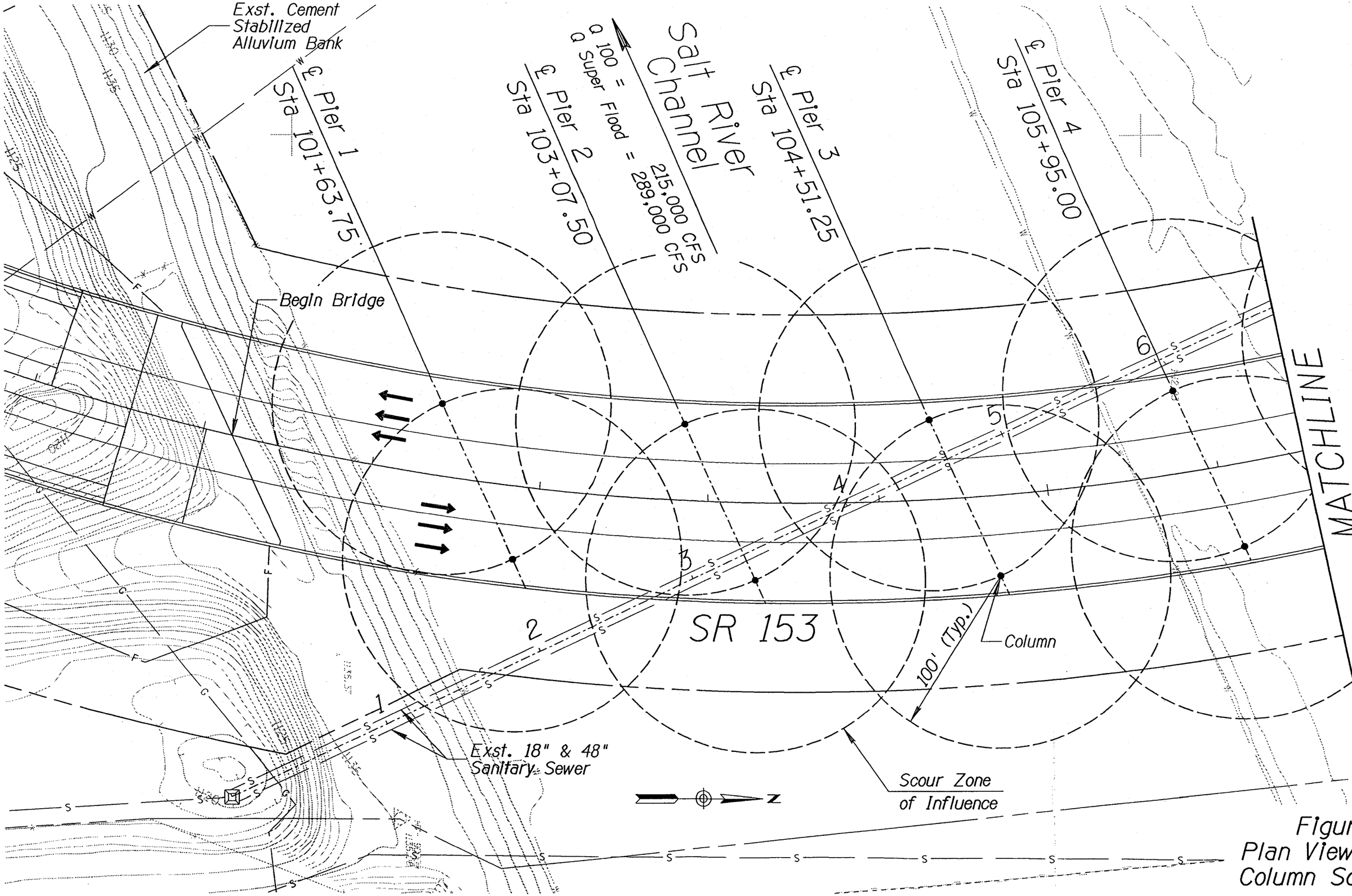

Figure 1
Plan View of
Column Scour

J-10

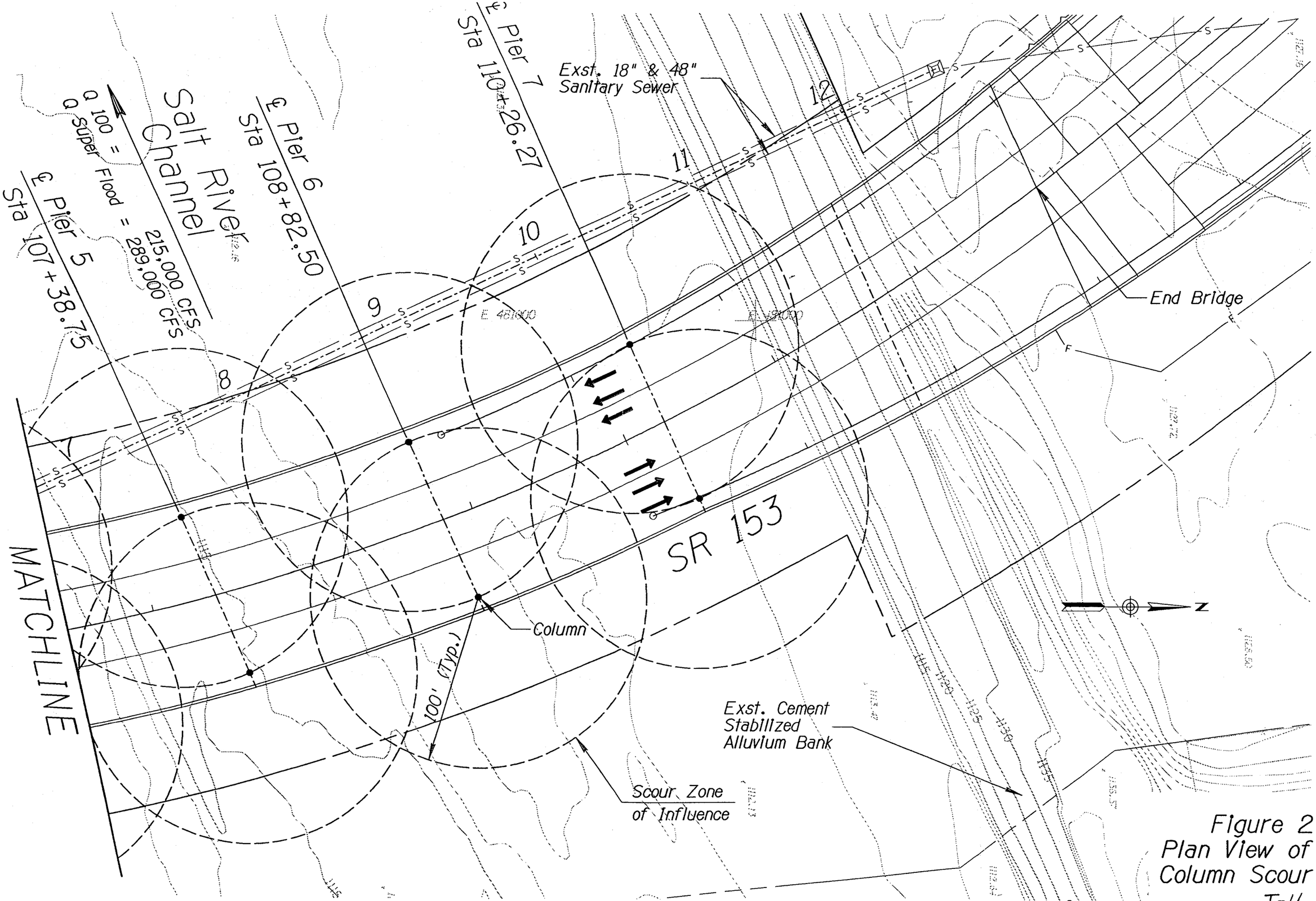

Figure 2
Plan View of
Column Scour

J-11

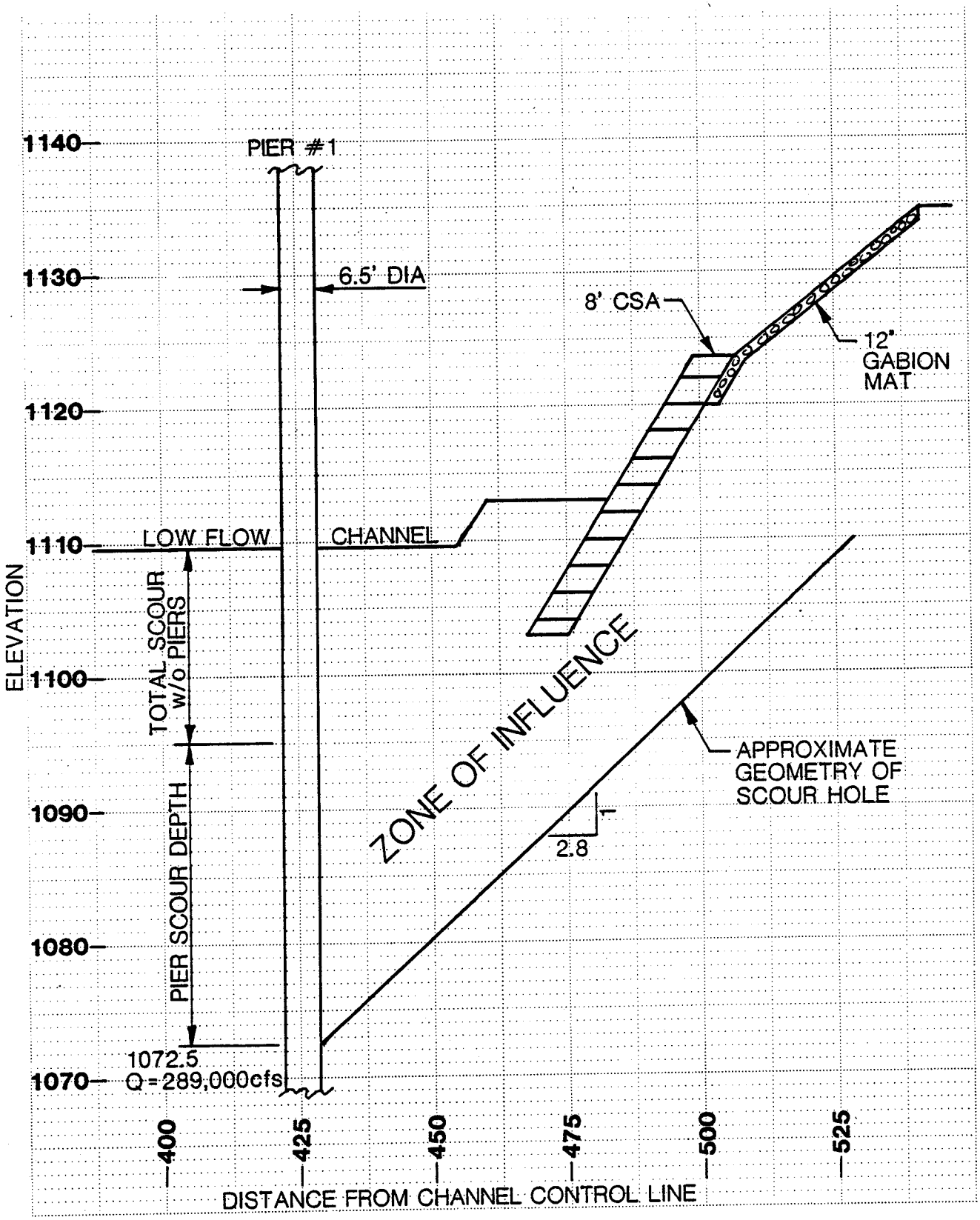

SR 153
Report On The Effects Of Scour

Section View, Effects of Scour On Bank Protection

Figure 3

J-12

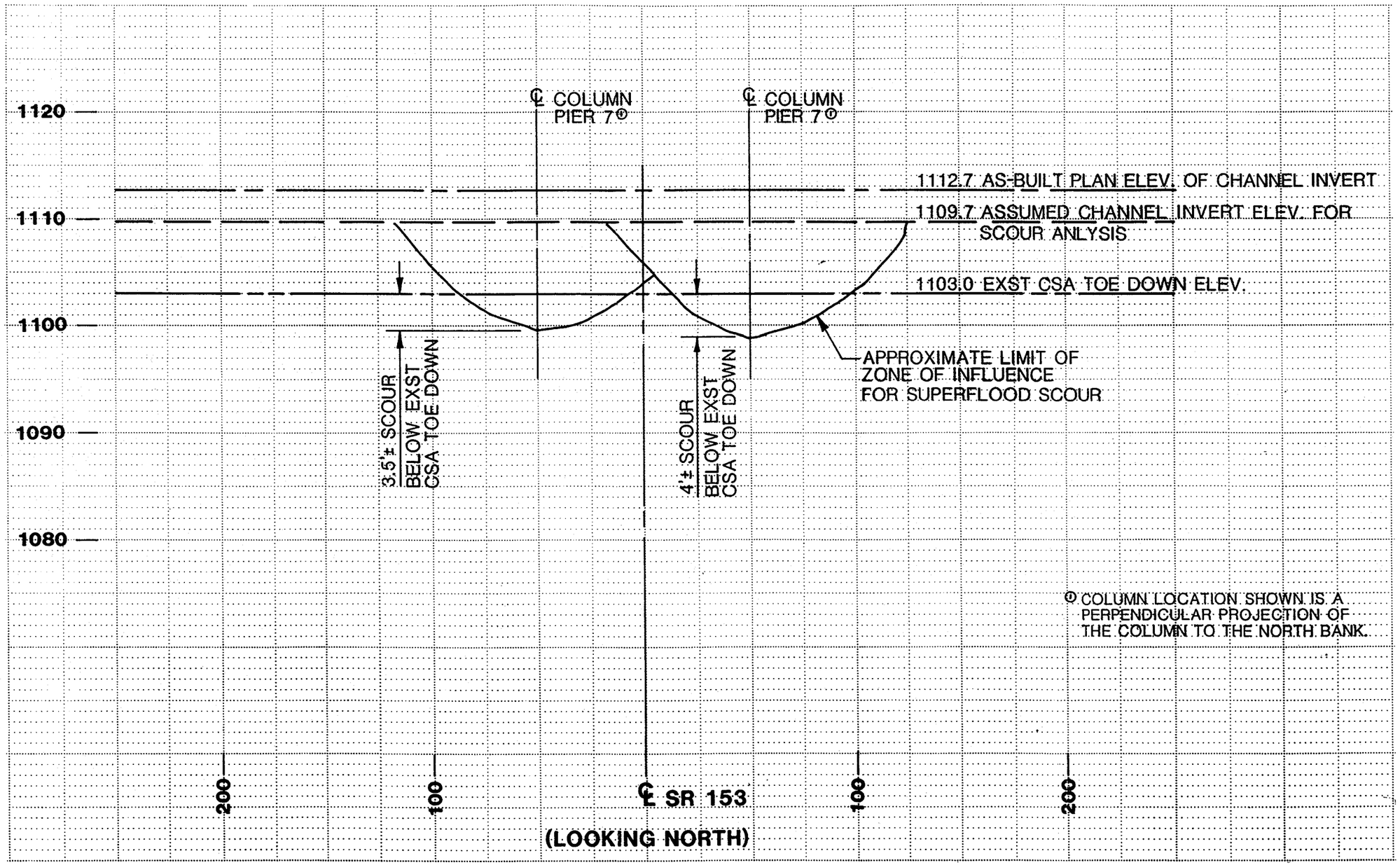

Zone Of Scour Influence At North Bank

Figure 4

J-13

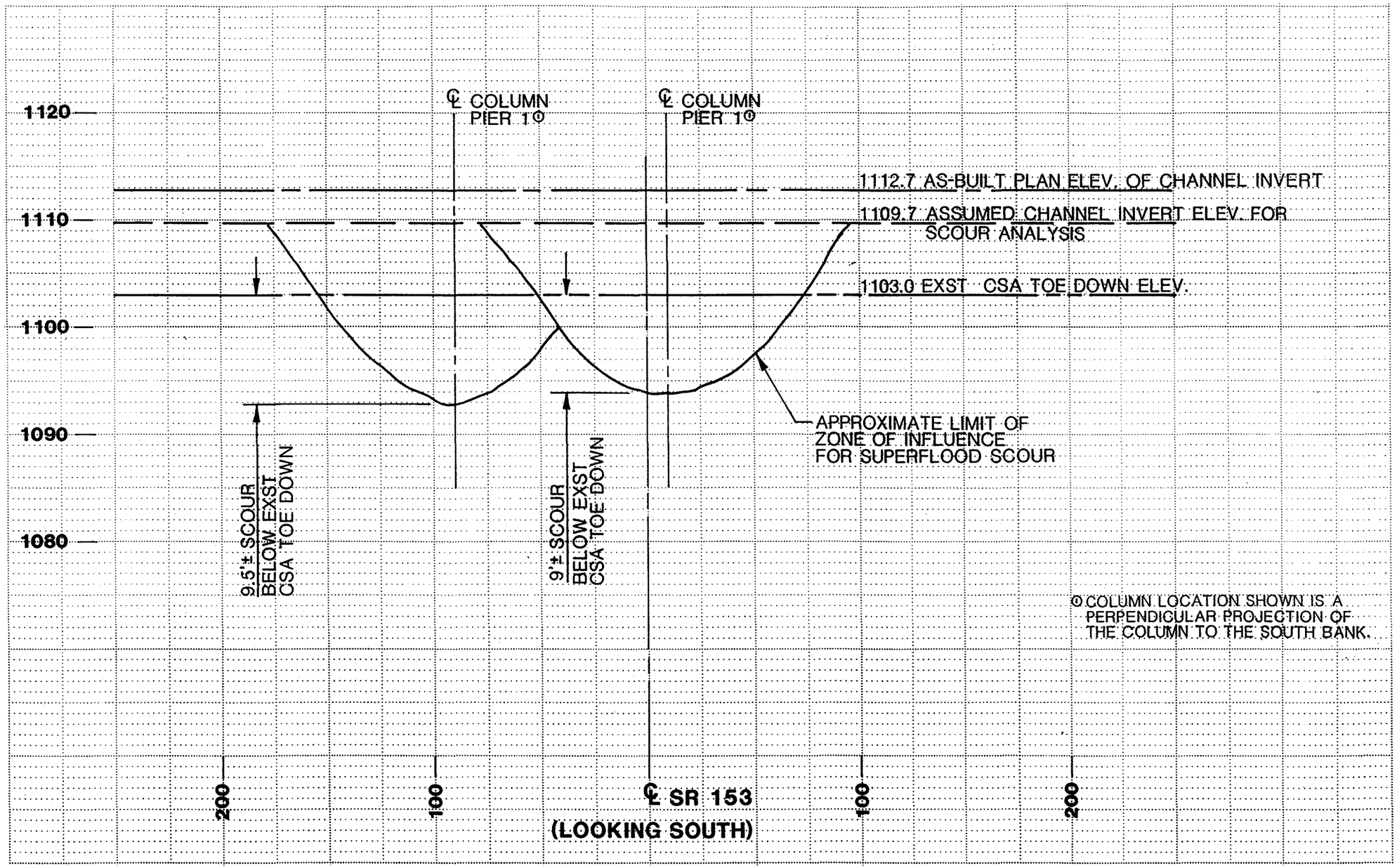
1120
1110
1100
1090
1080
℄ COLUMN PIER 1⊙
℄ COLUMN PIER 1⊙
1112.7 AS-BUILT PLAN ELEV. OF CHANNEL INVERT
1109.7 ASSUMED CHANNEL INVERT ELEV. FOR SCOUR ANALYSIS
1103.0 EXST CSA TOE DOWN ELEV.
APPROXIMATE LIMIT OF ZONE OF INFLUENCE FOR SUPERFLOOD SCOUR
9.5'± SCOUR BELOW EXST CSA TOE DOWN
9'± SCOUR BELOW EXST CSA TOE DOWN
⊙ COLUMN LOCATION SHOWN IS A PERPENDICULAR PROJECTION OF THE COLUMN TO THE SOUTH BANK.
200
100
℄ SR 153
(LOOKING SOUTH)
100
200

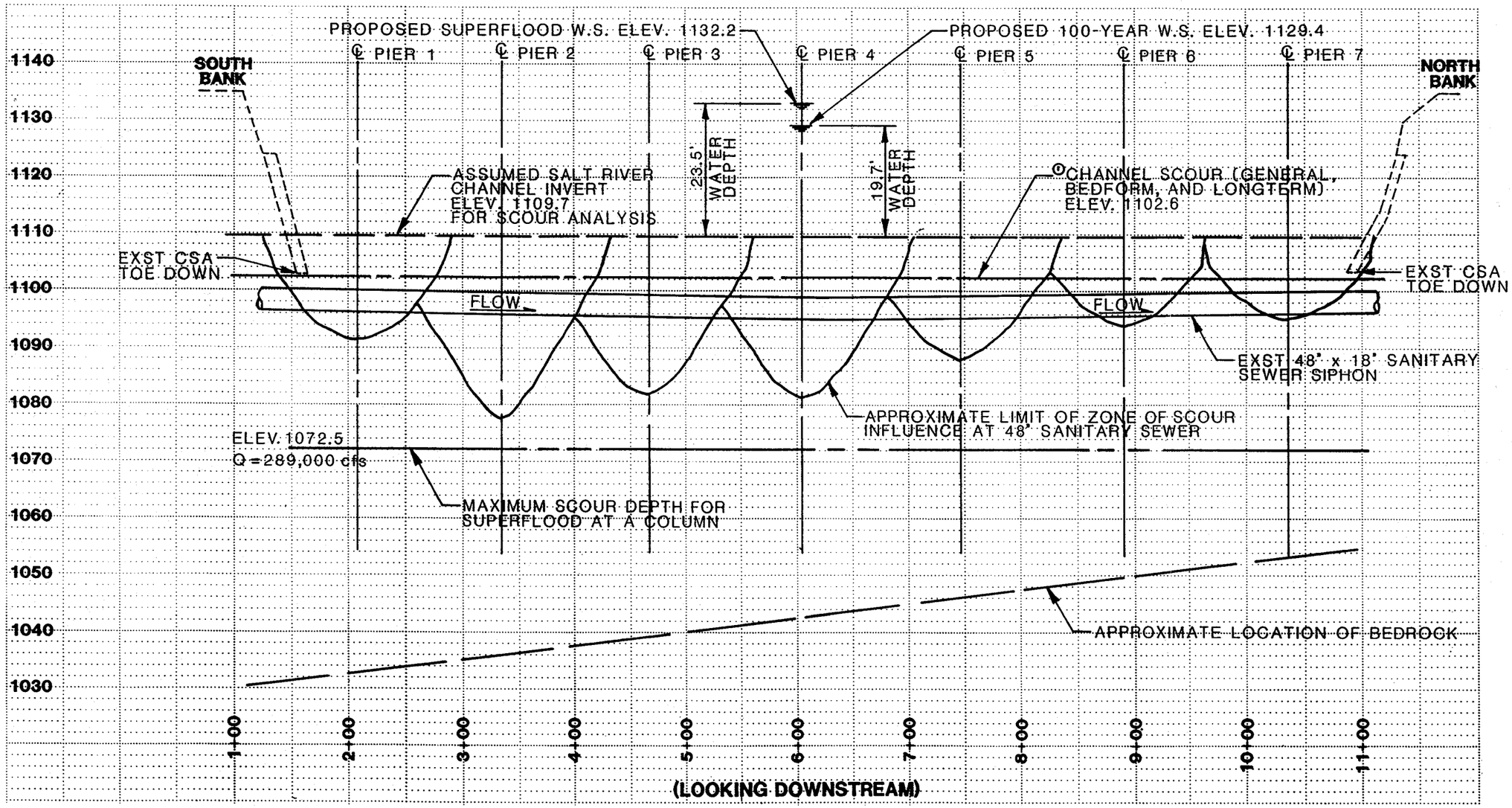

①THIS IS THE CHANNEL SCOUR ELEVATION WITHOUT CONSIDERATION FOR LOCAL SCOUR, SUCH AS BRIDGE COLUMNS.

Sanitary Sewer Relocation

Replace in kind, use the 511 costs from the original relocation. Cost per ft. of pipe includes all materials & excavation & backfill. Add a cost for dewatering.

48" RCP N&S of River:	$225	1200'	270,000
48" RCPP in River:	250	1248	312,000
18" RCPP in River:	110	1248	137,280
Junction	50,000	1	50,000
Junction	56,000	1	56,000
Inlet to Siphon	35,000	1	35,000
Outlet to Siphon	23,000	1	23,000
Outlet Access	18,000	1	18,000
MH	4500	1	4500
MH	3500	1	3500
Pipe Sleeve	250	277	69,250
			$958,530

Dewatering: $70,000 Mob/Demob + $1700/day (60 days) = 172,000

CSA Removal & Replacement:

6040 cy (17.82) = 101,714

Total Const (In Kind): $1,232,244

Tempe has stated that 48" is oversized, Const cost for 2 18"ϕ pipes in River = $1,057,524

JOB SR153 - Sky Harbor SHEET NO.
MADE BY C. Slagell DATE 9/16/93 JOB NO. 1256
CHECKED BY DATE SEC. SHT. NO. 50-1
CALCULATIONS FOR Prelim. Costs

BRW

SS Relocation (Cont)

Design Costs: Use 6% of const. cost

In Kind Replacement: 0.06(1,232,244) = $73,935
2-18" diameter: 0.06(1,057,524) = $63,451

TOTAL Costs:

In Kind: 73,935 + 1,232,244 = $1,306,179
2-18" ϕ: 63,451 + 1,057,524 = 1,120,975

BRW

JOB SR153 - Sky Harbor SHEET NO.
MADE BY C. Slogell DATE 9/12/93 JOB NO. 1956
CHECKED BY DATE SEC. SHT. NO. PC-2
CALCULATIONS FOR Prelim. Costs

DRILLED SHAFTS

Use 6' ϕ drilled shafts. Use 10' emb. past scour line

Toe Down Protection:

South Bank: ≈240' of protection needed 40-6' ϕ shafts

30 LF/shaft, total LF for south bank = 1200 LF

North Bank: ≈200' of protection need 34-6' ϕ shafts

23 LF/shaft, total LF for north bank = 782 LF

1982 LF

Est Cost = 1982 × $280 = $554,960 for bank protection

Est. Eng Cost: 0.06(554,960) = $33,298

Total Cost = 33,298 + 554,960 = $588,258

BRW

JOB SR153 - Sky Harbor SHEET NO.

MADE BY C. Slagell DATE 9/12/93 JOB NO. 1956

CHECKED BY DATE SEC. SHT. NO. 26-3

CALCULATIONS FOR Prelim. Costs

Sewer Line Protection

≈916' btwn btm of toe downs across River. Use 10' extension below scour line. Total depth varies from 42' @ south bank to 25' at the north bank.

2 Rows × 153 shafts × 33.5' avg × $280 = $2,870,280

Eng. Costs: 0.06 (2,870,280) = $172,217

Total Cost = 172,217 + 2,870,280 = $3,042,497

BRW

JOB SR153 - Sky Harbor SHEET NO.
MADE BY C. Slagell DATE 9/12/93 JOB NO. 1956
CHECKED BY DATE SEC. SHT. NO. PC-4
CALCULATIONS FOR Prelim. Costs.

OPEN EXCAVATION

Bank Protection

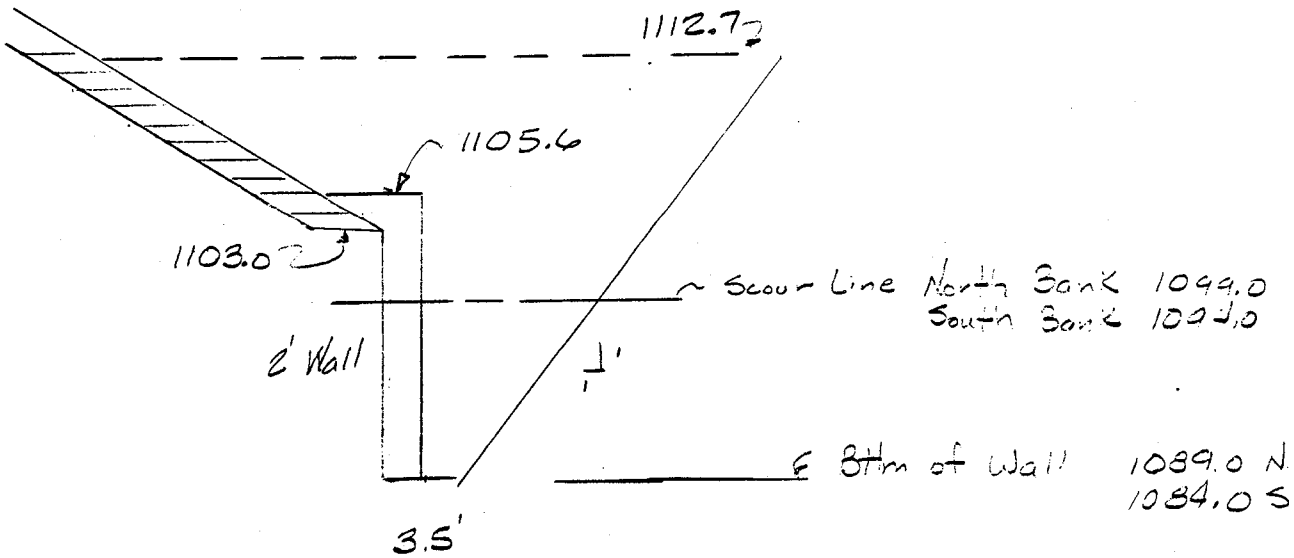

South Bank Excavation:

$$\left[\left(\frac{3.5'+22.5}{2}\right)(19') + \left(\frac{22.5+46.8}{2}\right)(9.7')\right]\left(\frac{240'}{27}\right) = 5183 \text{ CY}$$

South Bank Backfill: 429 CY

$$5183 \text{ cy} - \left[2.0'(21.6') + 2.6'(3.9')\left(\tfrac{1}{2}\right)\right]\left(240/27\right) = 4754 \text{ CY}$$

South Bank Concrete: 3000 psi 429 CY

Rebar 90 #/cy (429) = 38,610 lb

North Bank Excavation:

$$\left[\left(\frac{3.5+17.5}{2}\right)(14) + \left(\frac{17.5+41.8}{2}\right)(9.7)\right]\left(\frac{200}{27}\right) = 3219 \text{ CY}$$

BRW

JOB SR153 Sky Harbor SHEET NO.
MADE BY C. Slagell DATE 9/12/93 JOB NO. 1956
CHECKED BY DATE SEC. SHT. NO. PC-5
CALCULATIONS FOR Prelim. Cost

North Bank Backfill:

283 CY

3219 CY − [2.0'(16.6) + 2.6(3.9)(½)] (200/27) = 2936 CY

North Bank Concrete: 3000psi = 283 CY

Rebar = 90(283) = 25,470 LB

TOTALS:

Drainage Ex: (5183 + 3219) × $2.00 =	16,804
Bkfill: (4754 + 2936) × $6.00 =	46,140
Conc: (429 + 283) × $120 =	85,440
Rebar: (38,610 + 25470) × $0.30 =	19,224
	$167,608

Dewatering: NA, part of Sewer Line Relocation —

Soldier Beams & Lagging: [14'(200') + 19'(2481')] $25/# = 184,000

$351,608

ENG. COSTS: 0.06(351,608) = 21,096

Total Cost = 21,096 + 351,608 = $372,704

JOB 8R153 Sky Harbor SHEET NO.

MADE BY C. Slagell DATE 9/12/93 JOB NO. 1956

CHECKED BY DATE SEC. SHT. NO. PC-6

CALCULATIONS FOR Prelim. Cost.

BRW

Sewer Protection

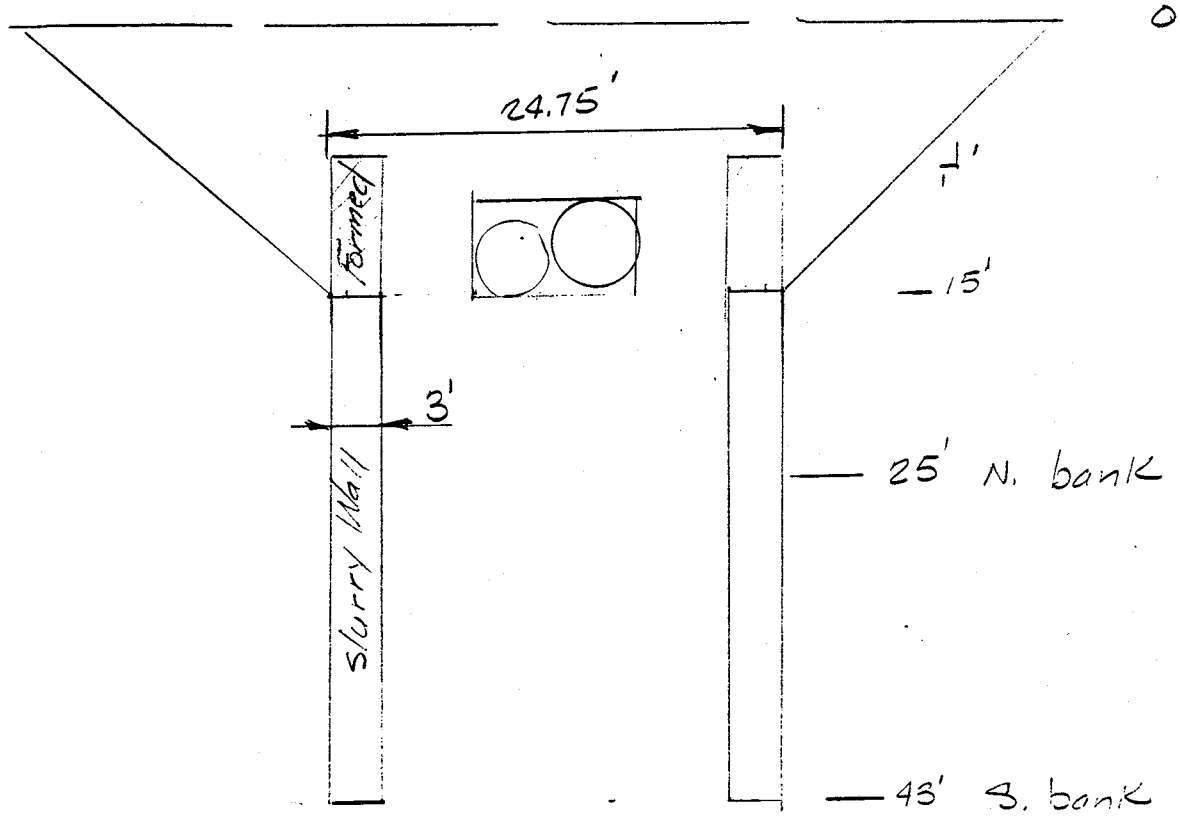

Excavation: $\left[\left(\frac{24.75 + 54.75}{2}\right)(15')(949')\right]/27 =$ 20,957 CY

Backfill: 20,957 - 3'(8')(949)(2)/27 = 19,270 CY

Concrete, 3000psi: 1,687 CY

Rebar: 90 (1687) = 151,830 Lb.

Slurry Wall: $2\left(\frac{28 + 10}{2}\right)(916') =$ 34,808 ft

JOB 3R153 Sky Harbor SHEET NO.

MADE BY C. Slagell DATE 9/12/93 JOB NO. 1956

CHECKED BY DATE SEC. SHT. NO. PC-7

CALCULATIONS FOR Prelim Cost

Const. Cost:

Excavation:	20,957 × $2.00	=	41,914
Backfill:	19,270 × $600	=	115,620
Concrete:	1,687 × $120	=	202,440
Rebar:	151,830 × $0.30	=	45,549
Slurry Wall:	34,808 × $40/#	=	1,392,320
			$1,797,843
	Dewatering		172,000
			$1,969,843

Eng. Cost: 0.06(1,969,843) = $118,190

TOTAL Sewer Line Protection (Excav. & Slurry)
= $118,190 + $1,969,843 = $2,088,033

BRW

JOB SR153 Sky Harbor SHEET NO.
MADE BY C. Slagell DATE 9/12/93 JOB NO. 1956
CHECKED BY DATE SEC. SHT. NO. PC-8
CALCULATIONS FOR Prelim Costs

SUMMARY

BANK PROTECTION

	Const $	ENG $	Total $
Slurry Wall: NA			
Drilled Shafts:	$555,000	$34,000	$589,000
Open Excavation:	$351,600	21,100	$372,700

SEWER LINE

Relocation (In Kind)	$1,232,300	$74,000	$1,306,300
(2-18"Ø)	1,057,500	63,500	$1,121,000
Drilled Shafts	2,870,300	172,200	3,042,500
Open Ex & Walls	1,970,000	118,200	2,088,200

BRW

JOB SR153 Sky Harbor SHEET NO.
MADE BY C. Sbagell DATE 9/12/93 JOB NO. 1956
CHECKED BY DATE SEC. SHT. NO. PC-9
CALCULATIONS FOR Prelim. Cost