Property of
Flood Control District of MC Library
Please Return to
2801 W. Durango
Phoenix, AZ 85009

Final Hydrology Report

November 1988

SQUAW PEAK HIGHWAY

Contract No. 87-40

Prepared for

Arizona Department of Transportation

Prepared By

Baker Engineers

Registered Professional Engineer (Civil)
CERTIFICATE NO. 11587
TIMOTHY E. WILLY
Date Signed 11/16/88
ARIZONA, U.S.A.

I. INTRODUCTION

A. Scope of Work

This report identifies the major drainage basins within the Squaw Peak Project area (Glendale Avenue to the Outer Loop Highway) and defines the runoff discharges for the major drainage components within the project limits. Existing drainage reports prepared by the U.S. Army Corps of Engineers, U.S. Bureau of Reclamation, the Federal Emergency Management Agency and several Arizona Department of Transportation (ADOT) consultants for watersheds in the project area were reviewed. Extensive computations and computer models were used for the Dreamy Draw and Indian Bend Wash watersheds.

50-year and 100-year design discharges have been computed for cross culvert design, the Indian Bend Wash crossing and downstream impacts from the proposed roadway construction. Methodologies used in this report are consistent with ADOT requirements and generally accepted policies for hydrologic computations.

B. Description of Area

For consideration of drainage design, the Squaw Peak Highway Project can be sub-divided into the following areas for analysis:

1. Glendale Avenue to Pleasant Drive
2. Dreamy Draw Watershed
3. Indian Bend Wash Watershed
4. Central Arizona Project to Outer Loop Freeway

The area between Glendale Avenue and Pleasant Drive is comprised of urban development ranging from single family residential to high density commercial acreage. The upper portion of Myrtle Wash within this area lies within the Phoenix Mountain Preserve and is drained by deep, well-defined washes and channels. Lower areas are drained by improved roadways and culverts.

The Dreamy Draw basin lies within the limits of the Phoenix Mountain Preserve and is essentially undeveloped with the exception of small residential areas in the upper portion of the watershed. Much of the adjacent mountain preserve drains through deep washes into the Dreamy Draw Detention reservoir from which downstream discharges are regulated.

The Indian Bend Wash watershed contains a very extensive range of commercial and residential development. Extreme changes in ground elevation are non-existent within the limits of the watershed. Initial rainfall excess is controlled by on site detention requirements and extreme surface runoff is conveyed by streets and alleys. The City of Phoenix has constructed major trunk storm sewers along Cactus Road, Shea Boulevard, Sweetwater Avenue, and Thunderbird Road to outfall into Indian Bend Wash.

Land north of the Central Arizona Project canal is undeveloped, alluvial fan which lies within the limits of the U.S. Bureau of Reclamation detention dikes. Runoff from this area is characterized by shallow sheet flow and conveyed through many undefined stream beds and washes. Flows are concentrated behind a dike constructed north of and along the Central Arizona Project aqueduct. The concentrated flows are released at a controlled rate into the aqueduct at specific locations.

TABLE OF CONTENTS

LIST OF FIGURES ii
LIST OF TABLES iii
LIST OF APPENDICES iv

I. INTRODUCTION

A. Scope of Work 1
B. Description of Area 1

II. DRAINAGE DESIGN CONCEPTS

A. Myrtle Avenue to Pleasant Drive 4
B. Dreamy Draw Watershed 7
C. Indian Bend Wash Watershed 13
D. Central Arizona Project to Outer Loop Freeway (Proposed) .. 24

III. REFERENCES 26

IV. APPENDICES 27

LIST OF FIGURES

FIGURE 1-1 Project Vicinity Map 3

FIGURE 2-1 Myrtle Avenue to Pleasant Drive - Drainage Area Map 5

FIGURE 2-2 Dreamy Draw Watershed - Drainage Area Map 8

FIGURE 2-3 Dreamy Draw Watershed - Schematic 10

FIGURE 2-4 Indian Bend Wash Watershed - Drainage Area Map 16

FIGURE 2-5 Indian Bend Wash Watershed - (Existing Conditions) Schematic 20

FIGURE 2-6 Indian Bend Wash Watershed - (Proposed Conditions) Schematic 21

FIGURE 2-7 Central Arizona Project to Outer Loop Highway - Drainage Area Map ... 25

LIST OF TABLES

TABLE 2-1 Myrtle Avenue to Pleasant Drive - Discharge Summary 6

TABLE 2-2 Dreamy Draw Watershed - Rainfall Frequency-Depth-Duration Data 7

TABLE 2-3 Dreamy Draw Watershed - Sub Area Watershed Parameters 9

TABLE 2-4 Dreamy Draw Watershed - Discharge Summary 12

TABLE 2-5 Indian Bend Wash - Rainfall Frequency/Depth/Duration 13

TABLE 2-6 SCS Curve Numbers by Zoning 17

TABLE 2-7 SCS Curve Number Modification Table 18

TABLE 2-8 Indian Bend Wash - Sub Area Watershed Parameters 19

TABLE 2-9 Indian Bend Wash - Discharge Summary 22

TABLE 2-10 Indian Bend Wash - Design Discharges along Proposed Highway 23

LIST OF APPENDICES

I	Dreamy Draw Watershed - HEC-1 (50-Year Storm)	27
II	Dreamy Draw Watershed - HEC-1 (100-Year Storm)	47
III	Indian Bend Wash - HEC-1 (Rainfall Distribution Computations)	67
IV	Indian Bend Wash - TR-20 (Existing Conditions - 50-Year Storm)	80
V	Indian Bend Wash - TR-20 (Existing Conditions - 100-Year Storm)	87
VI	Indian Bend Wash - TR-20 (Proposed Conditions - 50-Year Storm)	94
VII	Indian Bend Wash - TR-20 (Proposed Conditions - 100-Year Storm)	103

ARIZONA DEPARTMENT OF TRANSPORTATION

SQUAW PEAK HIGHWAY

State Route 51

GLENDALE AVENUE — PIMA FREEWAY

PROJECT VICINITY MAP

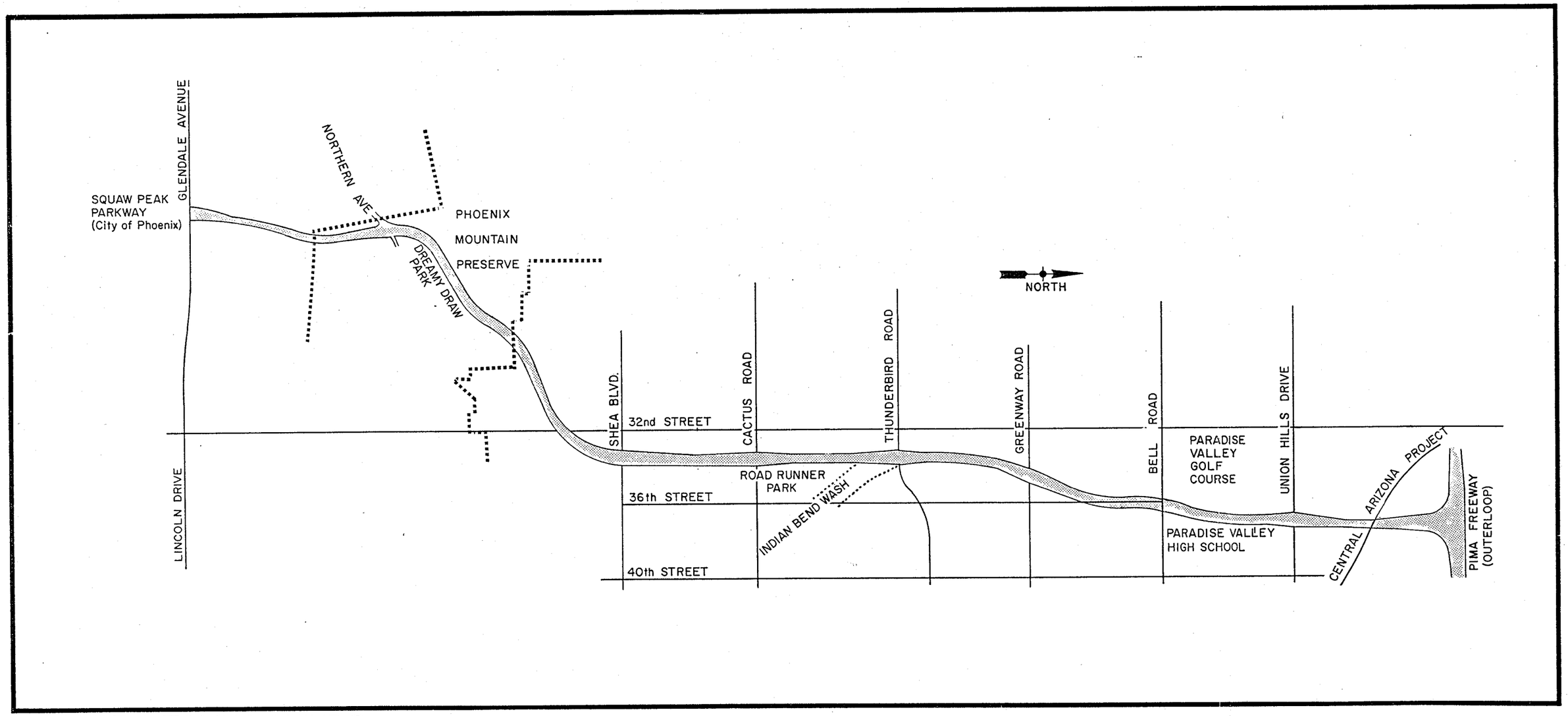

BAKER ENGINEERS

MICHAEL BAKER JR., INC.

PROJECT VICINITY MAP

FIGURE 1-1

II. DRAINAGE DESIGN CONCEPTS

A. Myrtle Avenue to Pleasant Drive

The drainage area for this portion of the Squaw Peak Highway consists of approximately 519 acres of land. As outlined in the Squaw Peak Parkway Extension Drainage Report (HNTB, May, 1988) 90 acres of land will drain from east to west across the proposed parkway through cross culverts. The Myrtle Wash Basin consists of approximately 429 acres to be drained under the highway at Myrtle Wash, see Figure 2-1.

50-year offsite discharges were determined in the HNTB report for each cross culvert location under the proposed highway, see Table 2-1. The Rational formula was used for each sub-area with rainfall intensities developed from the 50-year and 100-year, 1-hour rainfall depths. Drainage from the proposed roadway and median sections will be conveyed by separate storm sewer system to a detention basin which will regulate flows into Myrtle Wash.

Runoff from the Myrtle Wash basin were computed using the SCS TR-20 computer program. Rainfall depths for the 50-year and 100-year, 24-hour storm were used along with SCS curve numbers for infiltration to determine rainfall excess and runoff. 50-year and 100-year discharges for the 429 acre watershed were computed to be 1,301 cubic feet per second (cfs) and 1,528 cfs, respectively.

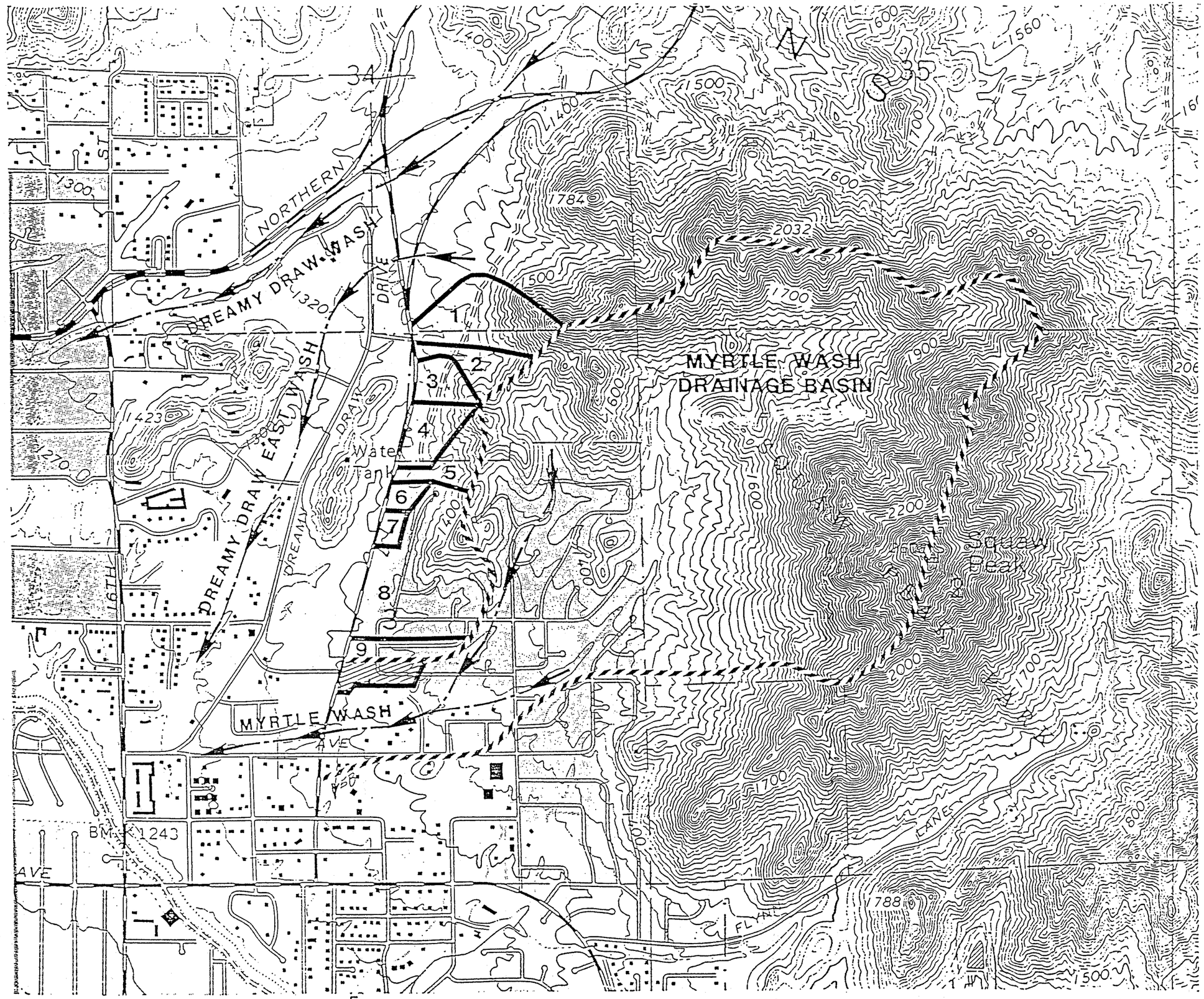

FIGURE 2-1

MYRTLE AVENUE TO PLEASANT DRIVE DRAINAGE AREA MAP

Figure is from the Squaw Peak Parkway Extension Drainage Report (HNTB, 1988)

Scale 1" = 1,000'

MICHAEL BAKER JR., INC.

TABLE 2-1

SQUAW PEAK EXTENSION
MYRTLE AVENUE TO PLEASANT DRIVE
DISCHARGE SUMMARY

SUB-AREA	DRAINAGE AREA (acres)	50-YEAR DISCHARGES (cfs)†		100-YEAR DISCHARGES (cfs)	
		Existing	Proposed	Existing	Proposed
11	19.2	83	80	93	90
2	8.4	37	34	42	38
3	5.2	23	17	26	19
4	5.7	26	18	29	20
5	6.8	31	28	34	31
6	2.6	10	9	11	5
7	2.5	10	9	11	5
8	31.9	134	119	151	134
9	7.2	26	22	29	25
Myrtle Wash*	429.0	1,301	1,301	1,528	1,528

† 50-Year discharge information determined in Squaw Peak Parkway Extension Drainage Report prepared by HNTB.

* Myrtle Wash discharges computed by A-N West for the Squaw Peak Extension, "Location/Design Concept Report," (Gruen Associates, 1987).

B. Dreamy Draw Watershed

The Dreamy Draw dam site and surrounding areas comprise a total drainage area of approximately 2.0 square miles. The watershed is located just north of Squaw Peak Mountain and is encompassed by the Phoenix Mountain Preserve. Drainage through Dreamy Draw Wash flows from northeast to southwest through the detention dam constructed by the Los Angeles District of the U.S. Army Corps of Engineers. Restricted discharges from the dam along with runoff from surrounding areas flow south towards the Arizona Canal, see Figure 2-2.

The watershed was modeled with the U.S. Army Corps of Engineers HEC-1 computer program. Runoff rates were determined for the 50-year and 100-year frequency storms using the SCS curve numbers and dimensionless hydrograph methodology. HEC-1 computer listings for the 50-year and 100-year event are included in Appendices I and II.

The U.S. Army Corps of Engineers has computed a maximum flood storage volume of 320 acre-feet for the Standard Project Flood (SPF). The resulting water surface elevation for this required storage volume is 1405 feet MSL. Proposed roadway fill for the areas upstream of the Dreamy Draw Dam will not encroach upon the flood control pool of the SPF.

Rainfall/Losses

Rainfall depths for the 50-year and 100-year storm event were input into the hypothetical storm option of the U.S. Army Corps of Engineers HEC-1 programs. Durations of 5 minutes to 24 hours were included, see Table 2-2. below

TABLE 2-2

RAINFALL FREQUENCY - DEPTH - DURATION DATA

	RAINFALL DEPTH (Inches)	
DURATION	50-Year	100-Year
5 - Minutes	0.65	0.73
15 - Minutes	1.28	1.44
60 - Minutes	2.25	2.53
2 - Hours	2.44	2.76
3 - Hours	2.56	2.91
6 - Hours	2.80	3.20
12 - Hours	3.10	3.50
24 - Hours	3.40	3.80

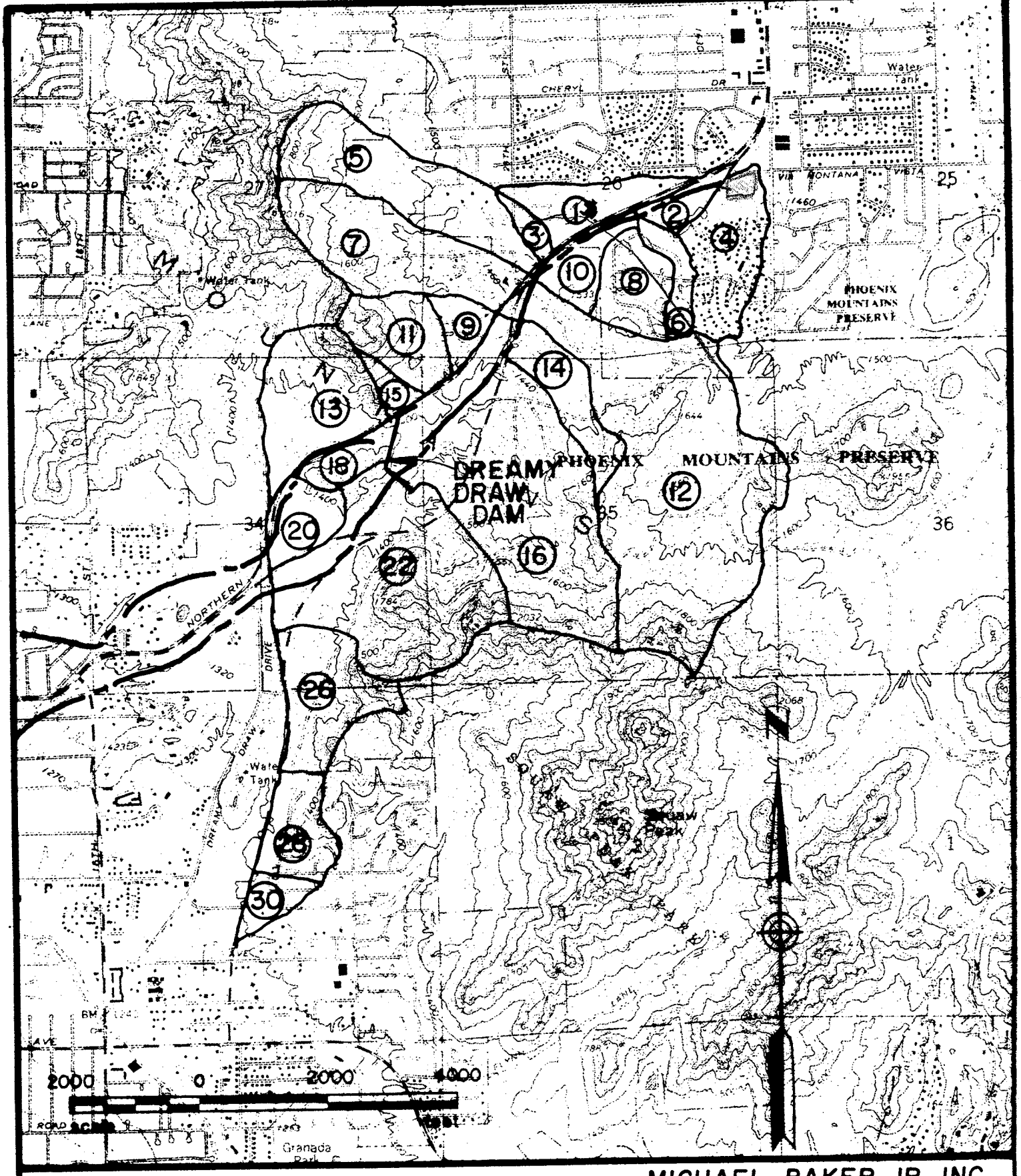

MICHAEL BAKER JR., INC.

FIGURE 2-2

DREAMY DRAW WATERSHED

DRAINAGE AREA MAP

TABLE 2-3

DREAMY DRAW WATERSHED
SUB-AREA WATERSHED PARAMETERS

SUB-AREA	DRAINAGE AREA (Square Miles)	SCS CURVE NUMBER	SCS LAG TIME (Hours)
1	0.05	83	0.281
2	0.01	82	0.274
3	0.01	83	0.200
4	0.09	83	0.273
5	0.13	82	0.309
6	0.03	83	0.257
7	0.15	83	0.299
8	0.06	83	0.208
9	0.03	82	0.113
10	0.03	82	0.133
11	0.06	82	0.189
12	0.41	82	0.547
13	0.12	82	0.235
14	0.06	82	0.236
15	0.02	82	0.064
16	0.35	82	0.541
18	0.03	82	0.109
20	0.04	82	0.263
22	0.28	82	0.221
26	0.06	82	0.183
28	0.02	83	0.138

NOTE: Schematic of watershed shown in Figure 2-3

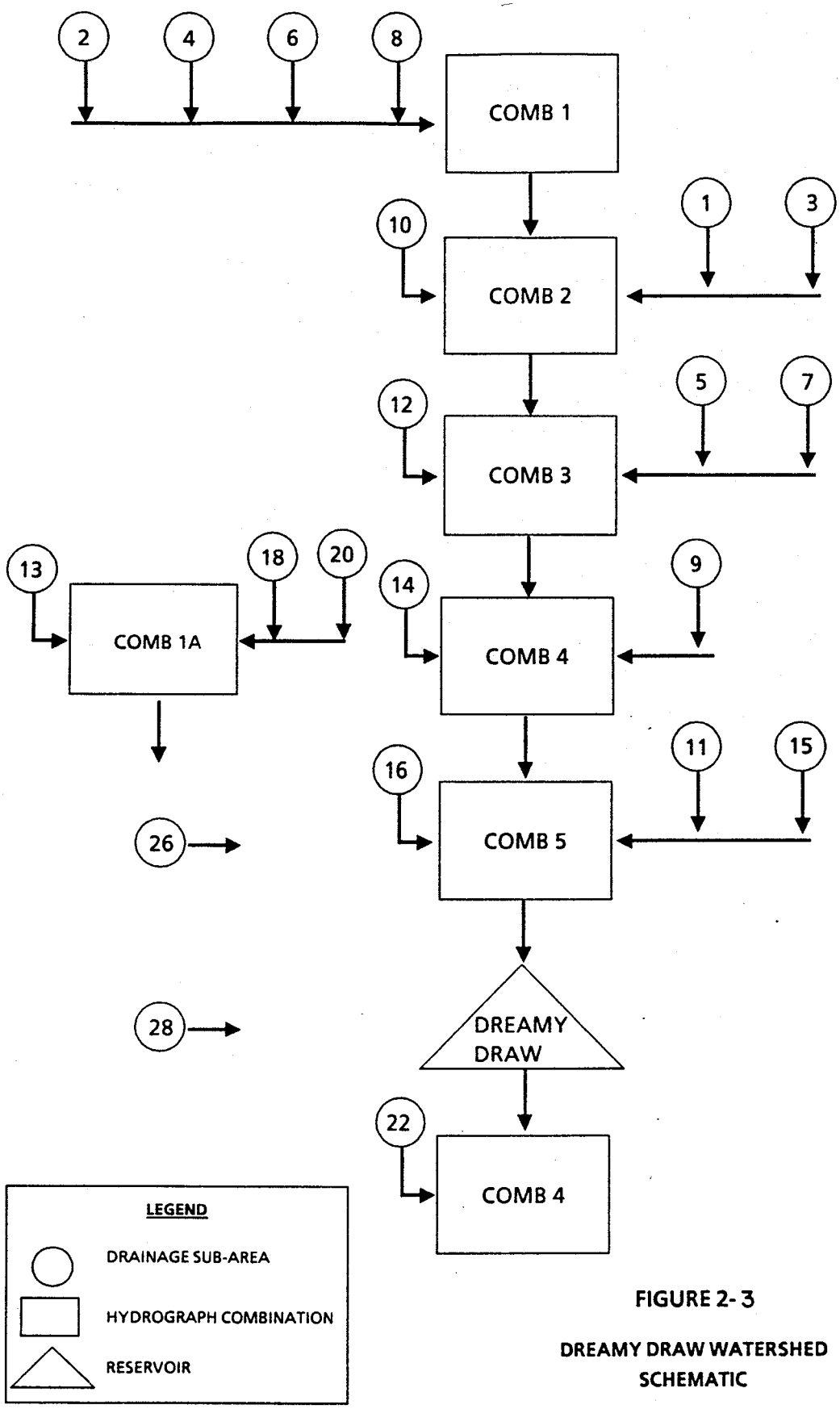

FIGURE 2-3

DREAMY DRAW WATERSHED SCHEMATIC

MICHAEL BAKER JR., INC.

Rainfall excess and losses due to infiltration were computed using the Soil Conservation Service Curve Number Method. Soils in the watershed consists of moderate slopes of hard to moderately soft bedrock overlain by various degrees of alluvium. Urban development is primarily limited to the upper portion of the watershed. Curve number data for each sub-area is listed in Table 2-3.

Runoff

Runoff hydrographs were computed using the SCS dimensionless hydrograph and the HEC-1 computer program. The time lag for each sub-area within the Dreamy Draw watershed were computed based on hydraulic length, basin slope and watershed storage using SCS methodology. Lag times for each area are listed in Table 2-3.

Runoff hydrographs were combined along Dreamy Draw and input into the detention reservoir constructed by the U.S. Army Corps of Engineers. The detention reservoir and primary outlet were designed for a Standard Project Storm. The detention reservoir was modeled using Stage-Storage information from the Corps of Engineers design study. The maximum discharge on the low level outlet is 220 cfs (Design Study) and the rating curve for the dam was held constant at an allowable release of 220 cfs. Hydrographs from areas below the dam were combined with the discharge hydrograph from the dam outlet works. 50-year and 100-year discharges for the Dreamy Draw watershed are listed in Table 2-4.

missing 13

TABLE 2-4

DREAMY DRAW WATERSHED DISCHARGE SUMMARY

SUB-AREA	DRAINAGE AREA (Square Miles)	PEAK DISCHARGE (cfs) 50-Year	100-Year
4	.09	121	146
2	.01	13	16
6	.03	42	50
8	.06	93	112
COMB 1		264	320
10	.03	53	64
1	.05	66	80
3	.01	16	19
COMB 2		383	463
5	.13	163	196
12	.41	344	418
7	.15	182	222
COMB 3		938	1,139
14	.06	83	101
9	.03	57	70
COMB 4		1,037	1,262
16	.35	296	360
11	.06	93	113
15	.02	45	55
COMB 5	1.49	1,331	1,620
RESERVOIR	---	220	220
22	.28	398	483
COMB 6		618	703
13	.12	166	202
18	.03	58	71
20	.04	52	63
COMB 1A		254	309
26	.19	94	114
28	.06	37	44

K.H = 1245
D.A = 1.30

NOTE: HEC-1 model for 50-year and 100-year storm events are listed in Appendices I and II, respectively.

C. Indian Bend Wash Watershed

The Indian Bend Wash Watershed consists of approximately 24.7 square miles of land north of 26th Street (see Figure 2-4). The watershed is bounded by the Phoenix Mountain Preserve to the west and south and by the Central Arizona Project canal to the north. Drainage through Indian Bend Wash flows from the northwest to the southeast towards the City of Scottsdale and ultimately into the Salt River.

A computer model for the watershed was developed using the Soil Conservation Service (SCS) TR-20 program. This model was originally prepared for the Squaw Peak Extension Location/Design Concept Report (Gruen Associates, 1987). Fifty (50) year and 100-year discharges were computed for the Indian Bend Wash Watershed using this model (See Appendices IV through VII). Revisions were made to drainage sub-areas within the watershed to account for changes in drainage paths from the proposed Squaw Peak alignment.

Rainfall/Losses

50- and 100-year rainfall depths were determined for the project site for durations of 5 minutes to 24 hours, see Table 2-5.

TABLE 2-5

INDIAN BEND WASH
RAINFALL FREQUENCY-DEPTH-DURATION DATA

	RAINFALL DEPTH (Inches)	
DURATION	50-Year	100-Year
5 - Minutes	0.65	0.73
15 - Minutes	1.28	1.44
60 - Minutes	2.25	2.53
2 - Hours	2.44	2.76
3 - Hours	2.56	2.91
6 - Hours	2.80	3.20
12 - Hours	3.10	3.50
24 - Hours	3.40	3.80

Using the hypothetical storm option of the U.S. Army Corps of Engineers HEC-1 computer program, rainfall patterns were developed for the watershed to be used as input to the SCS TR-20 model, see Appendix III for HEC-1 listings.

Infiltration losses and rainfall excess were computed using the SCS curve number method. Curve number values were determined in the Location/Design Concept Study using the following criteria:

- Soil Classification maps were obtained from the SCS which were compiled from the 1986 Aguilo-Carefree Soil Survey.
- Land use for the watershed was determined from City of Phoenix land use zoning and current aerial photographs.
- Land use and soil classification were used to assign curve numbers in accordance with the City of Phoenix Drainage Manual. Table 2-6 contains a copy of the zoning/curve number classification from the manual.
- Composite curve numbers were calculated for each drainage sub-area.
- Curve numbers for some drainage areas were adjusted to account for retention requirements within those areas. Locations of these areas were identified on a map of the study area developed by AN-West for the Location/Design Concept Report.

The 100-year, 24-hour runoff depth was computed and reduced by the runoff depth of the 10-year, 2-hour or 100-year, 2-hour storm dependent upon the retention requirements in effect for that area. Revised curve numbers were determined to reflect this reduction in runoff. AN-West has developed a table of adjusted curve number values which was used in the study, see Table 2-7.

Runoff

Runoff hydrographs were computed from the TR-20 program using the SCS dimensionless hydrograph. Time of concentration values were used from the model developed in the Location/Design Concept Report and are listed with the existing sub-area parameters in Table 2-8. A schematic of the watershed model is shown in Figure 2-5.

Adjustments were required to the time of concentration values in those sub-areas affected by the proposed Squaw Peak Highway alignment, see Figure 2-6. Sub-areas which had parameters altered for the proposed highway are listed in Table 2-8.

Acreage west of the Squaw Peak Highway and south of the Indian Bend Wash will be concentrated in a drainage channel from Shea Boulevard to Sweetwater Avenue. At Sweetwater Avenue, the drainage will be conveyed to the east to Indian Bend Wash. Runoff originating north of Indian Bend Wash in the highway corridor will be conveyed along the highway and discharged into Indian Bend Wash at Thunderbird Road.

Discharges along Indian Bend Wash for existing and proposed conditions are listed in Table 2-9. Design discharges for the highway are listed in Table 2-10.

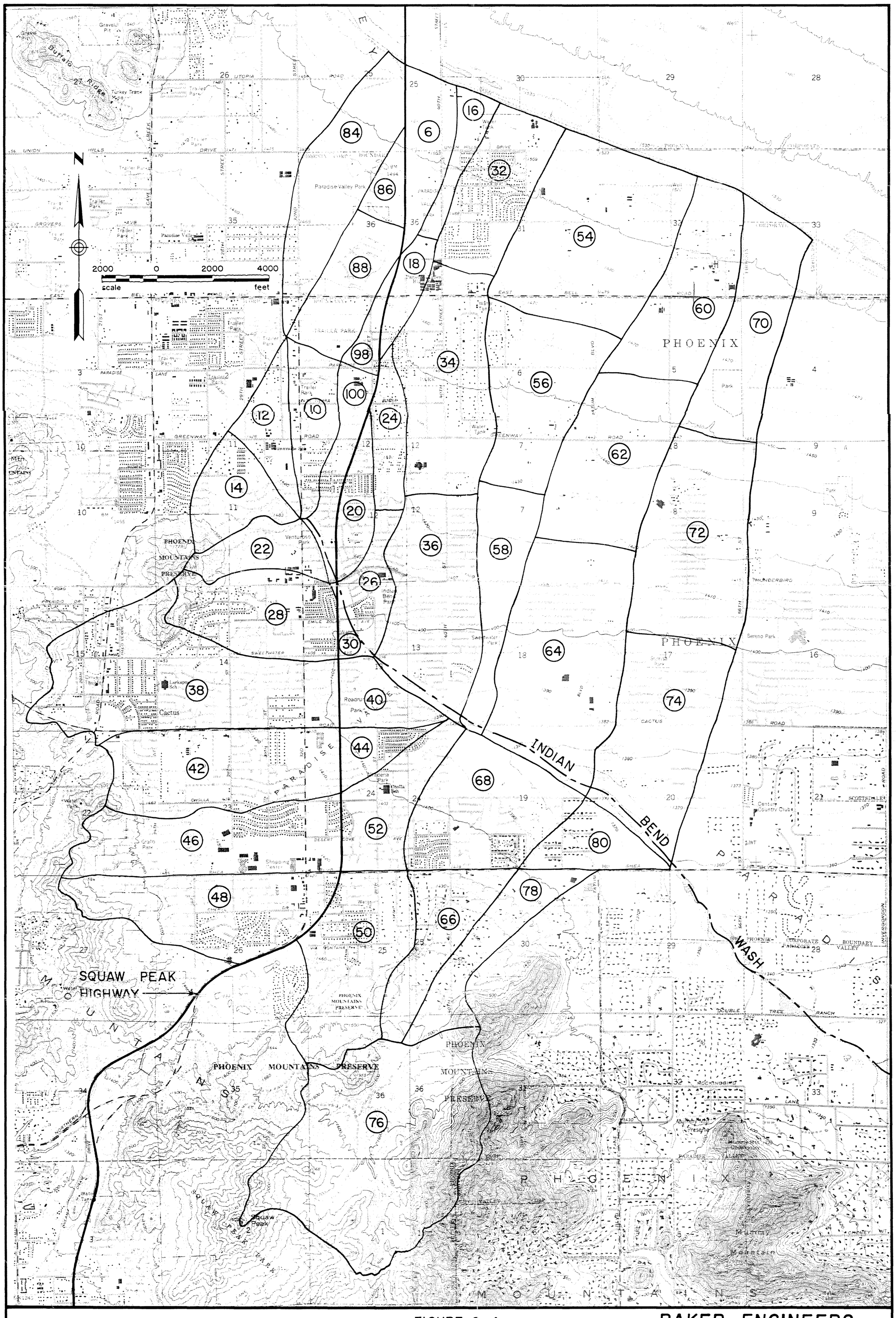

FIGURE 2-4
INDIAN BEND WASH WATERSHED
DRAINAGE AREA MAP

BAKER ENGINEERS
MICHAEL BAKER JR., INC.

TABLE 2-6

SCS CURVE NUMBERS BY ZONING
FOR USE WITH SCS OR TR-20 METHODS OF
DETERMINING RUNOFF IN THE CITY OF PHOENIX

ZONING	TYPE B	TYPE C	TYPE D
RE-43 S-1	77	83	86
RE-35	79	84	87
RE-25	79	84	87
E1-18	80	84	87
R1-14	80	85	88
R1-10	81	85	89
R1-8	82	87	90
R1-6	84	88	90
R-3	85	88	90
R-4 R-40 R-5	86	89	91
A-1 A-2	85	91	93
C-1 C-2 C-3	92	94	95
CO	88	91	93
PSC	95	95	95
HR R4A	95 87	95 90	95 92
Hillside (over 10% sloping).	98	98	98

TABLE 2-7

SCS CURVE NUMBER MODIFICATION TABLE

CN 1	10-YR 2-HR RAINFALL INCHES	10-YR 2-HR RUNOFF INCHES	100-YR 2-HR RAINFALL INCHES	100-YR 2-HR RUNOFF INCHES	100-YR 24-HR RAINFALL INCHES	100-YR 24-HR RUNOFF INCHES	$100\text{-}YR_{24}$ $10\text{-}YR_{2}$ RUNOFF INCHES	10-YR 2-HR CN_{MOD} 2	$100\text{-}YR_{24}$ $100\text{-}YR_{2}$ RUNOFF INCHES	100-YR 2-HR CN_{MOD} 3
77	1.70	0.30	2.64	0.83	4.00	1.81	1.51	73	0.98	64
79	1.70	0.36	2.64	0.93	4.00	1.96	1.61	74	1.03	65
80	1.70	0.39	2.64	0.99	4.00	2.04	1.65	75	1.05	65
81	1.70	0.42	2.64	1.04	4.00	2.12	1.70	75	1.08	66
82	1.70	0.46	2.64	1.10	4.00	2.20	1.74	76	1.10	66
83	1.70	0.50	2.64	1.16	4.00	2.29	1.79	77	1.12	67
84	1.70	0.54	2.64	1.23	4.00	2.37	1.83	77	1.15	67
85	1.70	0.58	2.64	1.29	4.00	2.46	1.87	78	1.17	67
86	1.70	0.63	2.64	1.36	4.00	2.55	1.92	78	1.19	68
87	1.70	0.68	2.64	1.42	4.00	2.64	1.96	79	1.21	68
88	1.70	0.73	2.64	1.50	4.00	2.73	2.00	79	1.23	68
89	1.70	0.79	2.64	1.58	4.00	2.82	2.04	80	1.25	69
90	1.70	0.84	2.64	1.66	4.00	2.92	2.08	80	1.26	69
91	1.70	0.91	2.64	1.74	4.00	3.02	2.11	81	1.28	69
92	1.70	0.97	2.64	1.82	4.00	3.12	2.15	81	1.29	69
93	1.70	1.04	2.64	1.91	4.00	3.22	2.18	82	1.31	70
94	1.70	1.12	2.64	2.00	4.00	3.32	2.21	82	1.32	70
95	1.70	1.20	2.64	2.10	4.00	3.43	2.23	82	1.33	70
98	1.70	1.48	2.64	2.41	4.00	3.77	2.29	83	1.36	70

1. Runoff Curve Number (100-Year 24-Hour) Unadjusted for Retention.
2. Runoff Curve Number (100-Year 24-Hour) Adjusted for 10-Year 2-Hour Retention.
3. Runoff Curve Number (100-Year 24-Hour) Adjusted for 100-Year 2-Hour Retention.

TABLE 2-8

INDIAN BEND WASH
SUB-AREA WATERSHED PARAMETERS

	EXISTING CONDITIONS			PROPOSED CONDITIONS		
SUB-AREA	AREA (Sq. Mi.)	SCS CURVE NUMBER	T_C (Hours)	AREA (Sq. Mi.)	SCS CURVE NUMBER	T_C (Hours)
*4	0.73	77.7	1.15	-----	-----	-----
*6	0.38	78.6	0.52	0.32	78.2	0.75
*8	0.44	81.9	0.64	-----	-----	-----
*10	0.27	82.5	0.69	-----	-----	-----
12	0.26	77.6	0.68	0.26	77.6	0.68
14	0.36	84.5	0.25	0.36	84.5	0.25
16	0.16	74.9	0.58	0.16	74.9	0.58
*18	0.24	76.8	0.59	0.15	77.8	0.59
*20	0.49	82.6	0.66	0.20	83.4	0.60
22	0.29	83.6	0.31	0.29	83.6	0.31
*24	0.24	82.1	0.67	0.23	82.1	0.67
26	0.21	84.0	0.47	0.21	84.0	0.47
*28	0.49	81.5	0.23	0.65	83.0	0.70
*30	0.20	84.6	0.47	0.04	71.9	0.33
32	0.56	80.2	0.41	0.56	80.2	0.41
34	0.93	79.4	0.87	0.93	79.4	0.87
36	0.89	82.3	0.79	0.89	82.3	0.79
*38	1.22	82.9	0.53	1.34	83.0	0.78
*40	0.35	82.6	0.83	0.23	82.0	0.60
*42	0.77	83.9	0.47	0.90	83.9	0.78
*44	0.29	82.9	0.60	0.16	82.0	0.83
*46	0.70	86.6	0.43	0.82	85.8	0.60
*48	0.74	80.9	0.57	0.80	87.1	0.57
*50	1.00	83.6	0.43	0.94	82.9	0.83
*52	0.57	81.8	1.00	0.45	82.0	1.00
54	1.33	78.1	0.82	1.33	78.1	0.82
56	0.76	80.4	0.99	0.76	80.4	0.99
58	0.41	81.0	0.96	0.41	81.0	0.96
60	0.73	78.4	0.65	0.73	78.4	0.65
62	0.89	80.0	0.73	0.89	80.0	0.73
64	1.35	80.1	1.08	1.35	80.1	1.08
66	0.44	78.2	0.54	0.44	78.2	0.54
68	0.78	80.4	0.63	0.78	80.4	0.63
70	0.71	79.4	0.77	0.71	79.4	0.77
72	1.00	80.1	0.73	1.00	80.1	0.73
74	1.00	82.4	0.84	1.00	82.4	0.84
76	1.85	83.2	1.02	1.85	83.2	1.02
78	0.39	78.5	0.58	0.39	78.5	0.58
80	0.27	77.7	0.50	0.27	77.7	0.50
*84	-----	-----	-----	0.69	77.7	1.09
*86	-----	-----	-----	0.11	77.8	0.30
*88	-----	-----	-----	0.43	82.4	0.64
*98	-----	-----	-----	0.09	74.9	0.45
*100	-----	-----	-----	0.30	82.0	0.76

NOTES: T_C - Time of Concentration
* - Sub-Area parameters adjusted between existing and proposed conditions

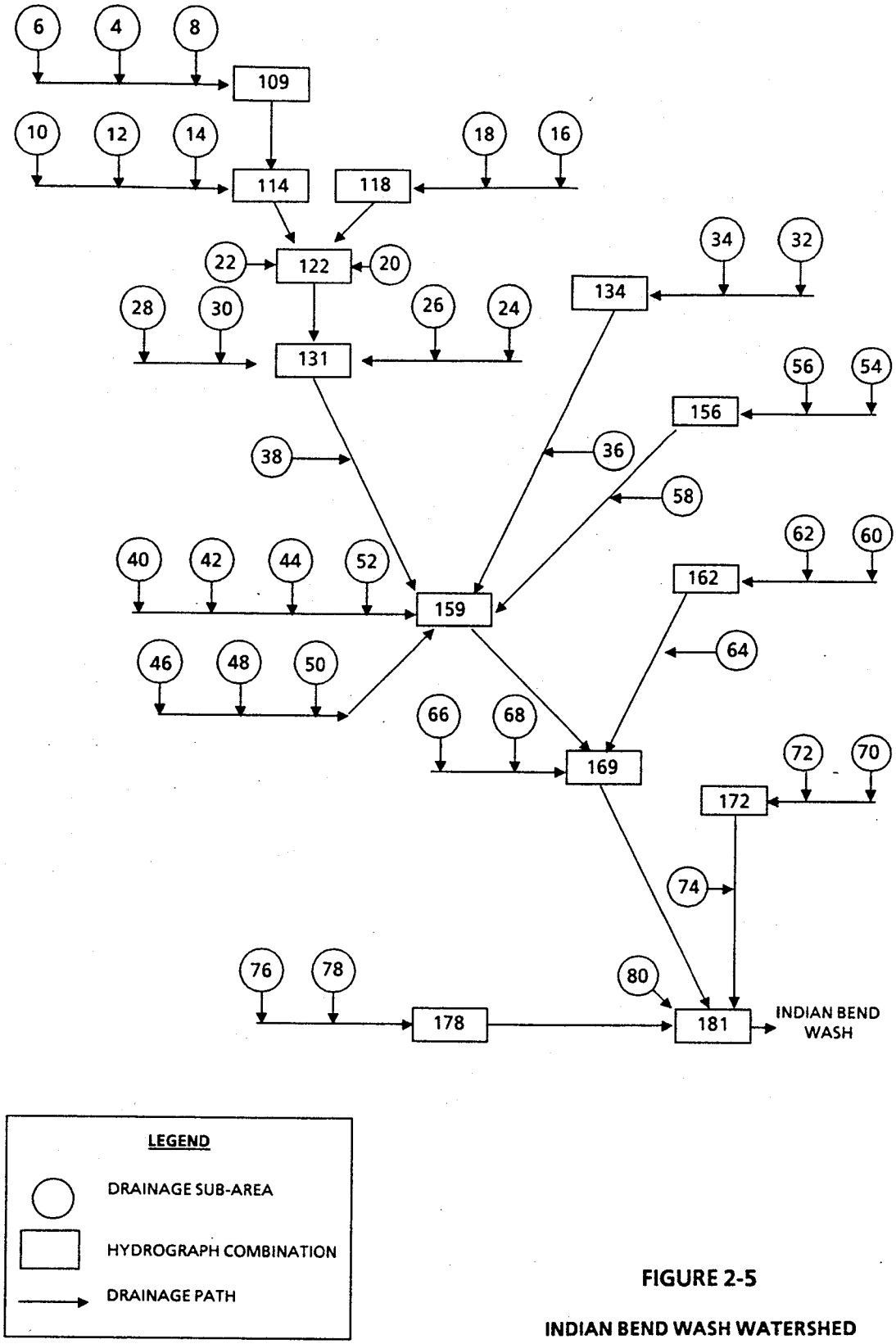

FIGURE 2-5

INDIAN BEND WASH WATERSHED EXISTING CONDITIONS SCHEMATIC

MICHAEL BAKER JR., INC.

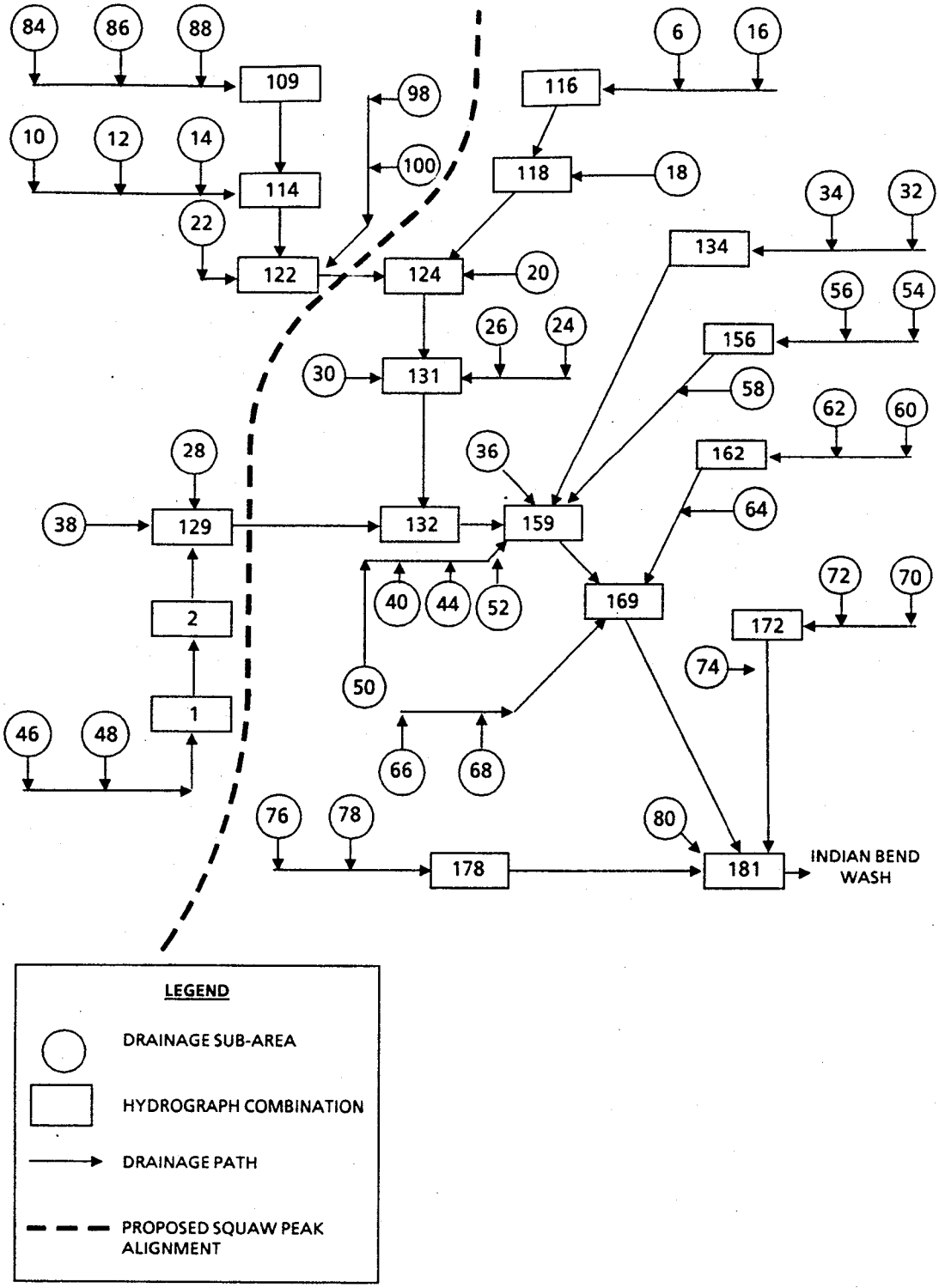

FIGURE 2-6

INDIAN BEND WASH WATERSHED PROPOSED CONDITIONS SCHEMATIC

MICHAEL BAKER JR., INC.

TABLE 2-9
INDIAN BEND WASH
DISCHARGE SUMMARY

LOCATION	DRAINAGE AREA (Square Miles) EXISTING	DRAINAGE AREA (Square Miles) PROPOSED	PEAK DISCHARGE (cfs) EXISTING 50-Year	PEAK DISCHARGE (cfs) EXISTING 100-Year	PEAK DISCHARGE (cfs) PROPOSED 50-Year	PEAK DISCHARGE (cfs) PROPOSED 100-Year
32nd Street	2.44	2.12	1,170	1,450	1,100	1,340
Thunderbird Road						
Upstream	3.62	2.80	1,690	2,130	1,410	1,730
Downstream	3.62	3.63	1,690	2,130	1,810	2,310
Sweetwater Avenue						
Upstream	4.76	4.11	2,250	2,810	1,900	2,400
Downstream	4.76	8.62	2,250	2,810	6,090	7,430
Cactus Road	15.28	15.28	8,280	10,260	8,380	10,360
Shea Boulevard	24.69	24.69	10,280	12,820	10,100	12,770

NOTE: TR-20 model for existing conditions is listed in Appendices IV and V and proposed conditions in Appendices VI and VII.

TABLE 2-10

INDIAN BEND WASH
DESIGN DISCHARGES ALONG PROPOSED HIGHWAY

LOCATION	IDENTIFICATION POINT*	DRAINAGE AREA (Sq. Mi.)	PEAK DISCHARGE 50-Year	PEAK DISCHARGE 100-Year
North of Indian Bend Wash				
Squaw Peak West				
Paradise Lane	98	0.09	80	100
Thunderbird Road	122	0.39	310	390
Squaw Peak East				
Paradise Valley H.S.	116	0.48	350	440
Paradise Lane	118	0.63	390	520
Thunderbird Road	124	0.83	430	600
South of Indian Bend Wash				
Squaw Peak West				
Shea Boulevard	48	0.80	1,050	1,240
Cholla Street	1	1.62	1,840	2,190
Cactus Road	2	2.52	2,670	3,180
Sweetwater Ave. (S)	3	3.86	3,740	4,510
Sweetwater Ave. (N)	28	0.65	640	770
Sweetwater Ave. (Combined)	129	4.51	4,270	5,230

NOTE: *See Figure 2-6 for schematic of proposed alignment.

D. Central Arizona Project to Outer Loop Highway

As outlined in the *Concept Drainage Design, Outer Loop Highway, North of the CAP Aqueduct* (Simons, Li and Associates, Inc., April, 1987) this area consists of a large alluvial fan type of formation. Water drains from the northeast to southwest via a series of braided stream beds and washes toward the Central Arizona Project (CAP) aqueduct. The portion of the Squaw Peak Highway north of the CAP aqueduct lies within a detention basin developed by the U.S. Bureau of Reclamation (USBR), see Figure 2-7.

The Squaw Peak Highway and its interchange with the proposed Outer Loop Highway lies within the limits of the drainage area for the USBR Dike No. 1. This dike parallels the northern edge of the CAP aqueduct with outlet structures which release into the CAP aqueduct at a regulated rate. According to the Simon, Li and Associates report, a 100-year water surface elevation of 1541 feet has been determined for the area behind Dike No. 1. Roadway sections constructed within the limits of Dike No. 1 should be constructed at or above the 100-year water surface elevation.

As outlined in the report by Simon, Li and Associates, a 125 foot "free" zone will be required between the upstream face of the USBR dike and the roadway embankments for the Outer Loop and Squaw Peak Highway. These "free" zones will be used to convey flood flows along the dike above the CAP aqueduct to the USBR outlet structure. Erosion protection will be needed along the upstream face of the detention dike and the roadway embankments at these crossings. Drainage for the Squaw Peak Highway in this area will consist of inlets and closed conduit for pavement drainage. Culverts beneath the pavement embankment may be needed to equalize flows within the detention area. Size and location should be evaluated in the final roadway design.

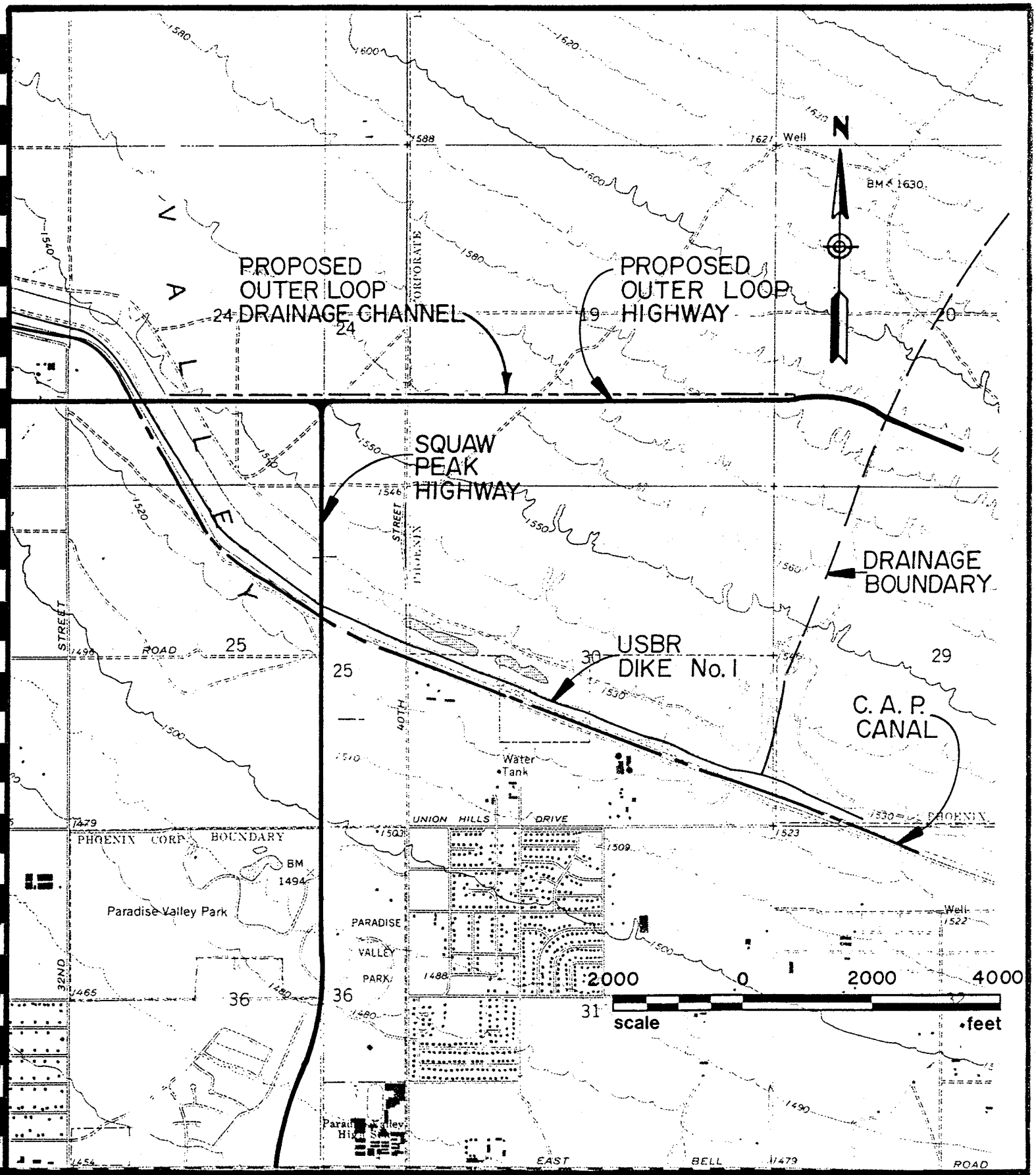

MICHAEL BAKER JR., INC.

FIGURE 2-7

CENTRAL ARIZONA PROJECT TO OUTER LOOP HIGHWAY

DRAINAGE AREA MAP

REFERENCES

1. *Precipitation - Frequency Atlas of the Western United States, Volume 8, Arizona,* National Oceanic and Atmospheric Administration.

2. Design Memorandum No. 1, *"Feature Design for Dreamy Draw Dam,"* U.S. Army Corps of Engineers, Los Angeles District, January, 1972.

3. Squaw Peak Extension, *"Location/Design Concept Report,"* Gruen Associates, October, 1987.

4. Outer Loop Highway, North of CAP Aqueduct, *"Concept Drainage Design,"* Simon, Li & Associates, Inc., March, 1988.

5. Squaw Peak Parkway Extension, *"Initial Drainage Report,"* Howard, Needles, Tammen & Bergendoff, May, 1988.

6. *HEC-1, Flood Hydrograph Package, Users Manual,* U.S. Army Corps of Engineers, Hydrologic Engineering Center, September, 1981.

APPENDIX I

DREAMY DRAW WATERSHED
HEC-1
50-YEAR STORM

```
LINE          ID.......1.......2.......3.......4.......5.......6.......7.......8.......9......10

  1           ID        SQUAW PEAK HIGHWAY _ STATE HWY 510
  2           ID        DISCHARGE DETERMINATION  50 YEARSTORM
  3           ID        SQUAW PEAK, PHOENIX, MARICOPA COUNTY,AZ.
  4           ID        JUNE 29, 1988 DREAMY DRAW MODELED AS RESERVOIR
  5           IT       3 26APR88       0     300
  6           IO       5

  7           KK    SUB4
  8           KM        RUNOFF FROM SUBAREA 4
  9           PH       0       0     .65    1.28    2.25    2.44    2.56    2.80     3.1     3.4
 10           BA     .09
 11           LS       0      83
 12           UD   0.273

 13           KK    SUB2
 14           KM        RUNOFF FROM SUBAREA 2
 15           BA     .01
 16           LS       0      82
 17           UD   0.274

 18           KK    SUB6
 19           KM        RUNOFF FROM SUBAREA 6
 20           BA     .03
 21           LS       0      83
 22           UD   0.257

 23           KK    SUB8
 24           KM        RUNOFF FROM SUBAREA 8
 25           BA     .06
 26           LS       0      83
 27           UD    .208

 28           KK   COMB1
 29           KM        COMBINE HYDROGRAPHS FROM SUBBASINS 4,2,6    +8=A
 30           HC       4

 31           KK   SUB10
 32           KM        RUNOFF FROM SUBBASIN 10
 33           BA     .03
 34           LS       0      82
 35           UD    .133

 36           KK    SUB1
 37           KM        RUNOFF FROM SUBAREA 1
 38           BA     .05
 39           LS       0      83
 40           UD    .281

 41           KK    SUB3
 42           KM        RUNOFF FROM SUBAREA 3
 43           BA     .01
 44           LS       0      83
 45           UD    .200
```

```
LINE          ID.......1.......2.......3.......4.......5.......6.......7.......8.......9......10

  46          KK   COMB2
  47          KM        COMBINE A1+10+1+     3=B
  48          HC       4

  49          KK    SUB5
  50          KM        RUNOFF FROM SUBAREA 5
  51          BA     .13
  52          LS       0       83
  53          UD    .309

  54          KK   SUB12
  55          KM        RUNOFF FROM SUBAREA 12
  56          BA     .41
  57          LS       0       82
  58          UD   0.547

  59          KK    SUB7
  60          KM        RUNOFF FROM SUBAREA 7
  61          BA     .15
  62          LS       0       82
  63          UD    .299

  64          KK   COMB3
  65          KM        COMBINE B+5+12+7=C
  66          HC       4

  67          KK   SUB14
  68          KM        RUNOFF FROM SUBAREA 14
  69          BA     .06
  70          LS       0       82
  71          UD    .236

  72          KK    SUB9
  73          KM        RUNOFF FROM SUBAREA 9
  74          BA     .03
  75          LS       0       82
  76          UD    .113

  77          KK   COMB4
  78          KM        COMBINE C+14+9=D
  79          HC       3

  80          KK   SUB16
  81          KM        RUNOFF FROM SUBAREA 16
  82          BA     .35
  83          LS       0       82
  84          UD    .541

  85          KK   SUB11
  86          KM        RUNOFF FROM SUBAREA 11
  87          BA     .06
  88          LS       0       82
  89          UD    .189
```

```
LINE          ID.......1.......2.......3.......4.......5.......6.......7.......8.......9......10

  90          KK   SUB15
  91          KM        RUNOFF FROM SUBAREA 15
  92          BA     .02
  93          LS       0       82
  94          UD   0.064

  95          KK   COMB5
  96          KM        COMBINE ROUTED HYDROGRAPHS D+16+11+15=E JUST U/S OF DDD
  97          HC       4

  98          KK     DDDDREAMY DRAW DAM
  99          KM        MODELED AS RESERVOIR USING COE INFORMATION
 100          KO       1
 101          RS       1    FLOW      -1
 102          SV       0       5      35      88     168     281
 103          SE    1381    1385    1390    1395    1400    1405
 104          SQ      0.     220     220     220     220     220
 105          SE    1381    1385    1390    1395    1400    1405

 106          KK   SUB22
 107          KM        RUNOFF FROM SUBAREA 22
 108          BA     .28
 109          LS       0       82
 110          UD    .221

 111          KK   COMB6
 112          KM        COMBINE E+22 @ O UTLET A
 113          KO       1
 114          HC       2

 115          KK   SUB13
 116          KM        RUNOFF FROM SUBAREA 13
 117          BA     .12
 118          LS       0       82
 119          UD    .235

 120          KK   SUB18
 121          KM        RUNOFF FROM SUBAREA 18
 122          BA     .03
 123          LS       0       82
 124          UD    .109

 125          KK   SUB20
 126          KM        RUNOFF FROM SUBAREA 20
 127          BA     .04
 128          LS       0       82
 129          UD    .263

 130          KK  COMB1A
 131          KM        COMBINE 13+18+20 @ OUTLET B
 132          KO       1
 133          HC       3
```

```
LINE          ID.......1.......2.......3.......4.......5.......6.......7.......8.......9......10

 134          KK   SUB26
 135          KM        RUNOFF FROM SUBAREA 26 @ OUTLET C
 136          KO       1
 137          BA     .06
 138          LS       0       82
 139          UD    .183

 140          KK   SUB28
 141          KM        RUNOFF FROM SUBAREA 28 @ OUTLET D
 142          KO       1
 143          BA     .02
 144          LS       0       83
 145          UD    .138
 146          ZZ
```

```
                                                  ****
                    FLOOD HYDROGRAPH PACKAGE HEC-1 (IBM XT 512K VERSION) -FEB 1,1985
         U.S. ARMY CORPS OF ENGINEERS, THE HYDROLOGIC ENGINEERING CENTER, 609 SECOND STREET, DAVIS, CA. 95616
                                                  ****


                        SQUAW PEAK HIGHWAY _ STATE HWY 510
                        DISCHARGE DETERMINATION  50 YEARSTORM
                        SQUAW PEAK, PHOENIX, MARICOPA COUNTY,AZ.
                        JUNE 29, 1988 DREAMY DRAW MODELED AS RESERVOIR

  6 IO          OUTPUT CONTROL VARIABLES
                      IPRNT           5  PRINT CONTROL
                      IPLOT           0  PLOT CONTROL
                      QSCAL          0.  HYDROGRAPH PLOT SCALE

    IT          HYDROGRAPH TIME DATA
                       NMIN           3  MINUTES IN COMPUTATION INTERVAL
                      IDATE    26APR88  STARTING DATE
                      ITIME       0000  STARTING TIME
                         NQ        300  NUMBER OF HYDROGRAPH ORDINATES
                     NDDATE    26APR88  ENDING DATE
                     NDTIME       1457  ENDING TIME

                 COMPUTATION INTERVAL     .05 HOURS
                      TOTAL TIME BASE   14.95 HOURS

        ENGLISH UNITS

 RNING *** TIME INTERVAL IS GREATER THAN .29*LAG

WARNING *** TIME INTERVAL IS GREATER THAN .29*LAG

RNING *** TIME INTERVAL IS GREATER THAN .29*LAG


*** *** *** *** *** *** *** *** *** *** *** *** *** *** *** *** *** *** *** *** *** *** *** *** *** *** *** *** *** *** *** *** ***


          **************
          *            *
 98 KK    *       DDD  *     DREAMY DRAW DAM
          *            *
          **************

00 KO          OUTPUT CONTROL VARIABLES
                      IPRNT           1  PRINT CONTROL
                      IPLOT           0  PLOT CONTROL
                      QSCAL          0.  HYDROGRAPH PLOT SCALE

            HYDROGRAPH ROUTING DATA

101 RS         STORAGE ROUTING
                      NSTPS           1  NUMBER OF SUBREACHES
                       ITYP        FLOW  TYPE OF INITIAL CONDITION
                     RSVRIC       -1.00  INITIAL CONDITION
                          X         .00 WORKING R AND D COEFFICIENT

102 SV           STORAGE          .0       5.0      35.0      88.0     168.0     281.0

03 SE          ELEVATION     1381.00   1385.00   1390.00   1395.00   1400.00   1405.00
```

104 SQ	DISCHARGE	0.	220.	220.	220.	220.	220.
105 SE	ELEVATION	1381.00	1385.00	1390.00	1395.00	1400.00	1405.00

***

COMPUTED STORAGE-OUTFLOW-ELEVATION DATA

STORAGE	.00	5.00	35.00	88.00	168.00	281.00
OUTFLOW	.00	220.00	220.00	220.00	220.00	220.00
ELEVATION	1381.00	1385.00	1390.00	1395.00	1400.00	1405.00

****

HYDROGRAPH AT STATION DDD

****

DA	MON	HRMN	ORD	OUTFLOW	STORAGE	STAGE	*	DA	MON	HRMN	ORD	OUTFLOW	STORAGE	STAGE	*	DA	MON	HRMN	ORD	OUTFLOW	STORAGE	ST
26	APR	0000	1	0.	.0	1381.0	*	26	APR	0500	101	0.	.0	1381.0	*	26	APR	1000	201	220.	60.0	139
26	APR	0003	2	0.	.0	1381.0	*	26	APR	0503	102	0.	.0	1381.0	*	26	APR	1003	202	220.	59.4	139
26	APR	0006	3	0.	.0	1381.0	*	26	APR	0506	103	0.	.0	1381.0	*	26	APR	1006	203	220.	58.8	139
26	APR	0009	4	0.	.0	1381.0	*	26	APR	0509	104	0.	.0	1381.0	*	26	APR	1009	204	220.	58.1	139
26	APR	0012	5	0.	.0	1381.0	*	26	APR	0512	105	0.	.0	1381.0	*	26	APR	1012	205	220.	57.5	139
26	APR	0015	6	0.	.0	1381.0	*	26	APR	0515	106	0.	.0	1381.0	*	26	APR	1015	206	220.	56.8	139
26	APR	0018	7	0.	.0	1381.0	*	26	APR	0518	107	0.	.0	1381.0	*	26	APR	1018	207	220.	56.2	139
26	APR	0021	8	0.	.0	1381.0	*	26	APR	0521	108	0.	.0	1381.0	*	26	APR	1021	208	220.	55.5	139
26	APR	0024	9	0.	.0	1381.0	*	26	APR	0524	109	0.	.0	1381.0	*	26	APR	1024	209	220.	54.8	139
26	APR	0027	10	0.	.0	1381.0	*	26	APR	0527	110	0.	.0	1381.0	*	26	APR	1027	210	220.	54.2	139
26	APR	0030	11	0.	.0	1381.0	*	26	APR	0530	111	0.	.0	1381.0	*	26	APR	1030	211	220.	53.5	139
26	APR	0033	12	0.	.0	1381.0	*	26	APR	0533	112	0.	.0	1381.0	*	26	APR	1033	212	220.	52.8	139
26	APR	0036	13	0.	.0	1381.0	*	26	APR	0536	113	0.	.0	1381.0	*	26	APR	1036	213	220.	52.1	139
26	APR	0039	14	0.	.0	1381.0	*	26	APR	0539	114	0.	.0	1381.0	*	26	APR	1039	214	220.	51.4	139
26	APR	0042	15	0.	.0	1381.0	*	26	APR	0542	115	0.	.0	1381.0	*	26	APR	1042	215	220.	50.7	139
26	APR	0045	16	0.	.0	1381.0	*	26	APR	0545	116	0.	.0	1381.0	*	26	APR	1045	216	220.	50.0	139
26	APR	0048	17	0.	.0	1381.0	*	26	APR	0548	117	0.	.0	1381.0	*	26	APR	1048	217	220.	49.3	139
26	APR	0051	18	0.	.0	1381.0	*	26	APR	0551	118	0.	.0	1381.0	*	26	APR	1051	218	220.	48.6	139
26	APR	0054	19	0.	.0	1381.0	*	26	APR	0554	119	0.	.0	1381.0	*	26	APR	1054	219	220.	47.9	139
26	APR	0057	20	0.	.0	1381.0	*	26	APR	0557	120	0.	.0	1381.0	*	26	APR	1057	220	220.	47.2	139
26	APR	0100	21	0.	.0	1381.0	*	26	APR	0600	121	0.	.0	1381.0	*	26	APR	1100	221	220.	46.5	139
26	APR	0103	22	0.	.0	1381.0	*	26	APR	0603	122	0.	.0	1381.0	*	26	APR	1103	222	220.	45.8	139
26	APR	0106	23	0.	.0	1381.0	*	26	APR	0606	123	0.	.0	1381.0	*	26	APR	1106	223	220.	45.1	139
26	APR	0109	24	0.	.0	1381.0	*	26	APR	0609	124	0.	.0	1381.0	*	26	APR	1109	224	220.	44.4	139
26	APR	0112	25	0.	.0	1381.0	*	26	APR	0612	125	0.	.0	1381.0	*	26	APR	1112	225	220.	43.7	139
26	APR	0115	26	0.	.0	1381.0	*	26	APR	0615	126	0.	.0	1381.0	*	26	APR	1115	226	220.	43.0	139
26	APR	0118	27	0.	.0	1381.0	*	26	APR	0618	127	0.	.0	1381.0	*	26	APR	1118	227	220.	42.3	139
26	APR	0121	28	0.	.0	1381.0	*	26	APR	0621	128	0.	.0	1381.0	*	26	APR	1121	228	220.	41.6	139
26	APR	0124	29	0.	.0	1381.0	*	26	APR	0624	129	0.	.0	1381.0	*	26	APR	1124	229	220.	40.9	139
26	APR	0127	30	0.	.0	1381.0	*	26	APR	0627	130	0.	.0	1381.0	*	26	APR	1127	230	220.	40.2	139
26	APR	0130	31	0.	.0	1381.0	*	26	APR	0630	131	0.	.0	1381.0	*	26	APR	1130	231	220.	39.4	139
26	APR	0133	32	0.	.0	1381.0	*	26	APR	0633	132	0.	.0	1381.0	*	26	APR	1133	232	220.	38.7	139
26	APR	0136	33	0.	.0	1381.0	*	26	APR	0636	133	0.	.0	1381.0	*	26	APR	1136	233	220.	38.0	139
26	APR	0139	34	0.	.0	1381.0	*	26	APR	0639	134	0.	.0	1381.0	*	26	APR	1139	234	220.	37.3	139
26	APR	0142	35	0.	.0	1381.0	*	26	APR	0642	135	0.	.0	1381.0	*	26	APR	1142	235	220.	36.5	139
26	APR	0145	36	0.	.0	1381.0	*	26	APR	0645	136	0.	.0	1381.0	*	26	APR	1145	236	220.	35.8	139
26	APR	0148	37	0.	.0	1381.0	*	26	APR	0648	137	0.	.0	1381.0	*	26	APR	1148	237	220.	35.1	139
26	APR	0151	38	0.	.0	1381.0	*	26	APR	0651	138	0.	.0	1381.0	*	26	APR	1151	238	220.	34.3	138
26	APR	0154	39	0.	.0	1381.0	*	26	APR	0654	139	0.	.0	1381.0	*	26	APR	1154	239	220.	33.6	138
26	APR	0157	40	0.	.0	1381.0	*	26	APR	0657	140	0.	.0	1381.0	*	26	APR	1157	240	220.	32.9	138
26	APR	0200	41	0.	.0	1381.0	*	26	APR	0700	141	0.	.0	1381.0	*	26	APR	1200	241	220.	32.1	138
26	APR	0203	42	0.	.0	1381.0	*	26	APR	0703	142	1.	.0	1381.0	*	26	APR	1203	242	220.	31.4	138
26	APR	0206	43	0.	.0	1381.0	*	26	APR	0706	143	1.	.0	1381.0	*	26	APR	1206	243	220.	30.7	138
26	APR	0209	44	0.	.0	1381.0	*	26	APR	0709	144	3.	.1	1381.0	*	26	APR	1209	244	220.	29.9	138
26	APR	0212	45	0.	.0	1381.0	*	26	APR	0712	145	5.	.1	1381.1	*	26	APR	1212	245	220.	29.2	138

26	APR	0215	46	0.	.0	1381.0	*	26	APR	0715	146	9.	.2	1381.2	*	26	APR	1215	246	220.	28.4	138
26	APR	0218	47	0.	.0	1381.0	*	26	APR	0718	147	15.	.3	1381.3	*	26	APR	1218	247	220.	27.7	138
26	APR	0221	48	0.	.0	1381.0	*	26	APR	0721	148	25.	.6	1381.5	*	26	APR	1221	248	220.	26.9	138
26	APR	0224	49	0.	.0	1381.0	*	26	APR	0724	149	39.	.9	1381.7	*	26	APR	1224	249	220.	26.2	138
26	APR	0227	50	0.	.0	1381.0	*	26	APR	0727	150	63.	1.4	1382.1	*	26	APR	1227	250	220.	25.4	138
26	APR	0230	51	0.	.0	1381.0	*	26	APR	0730	151	103.	2.3	1382.9	*	26	APR	1230	251	220.	24.7	138
26	APR	0233	52	0.	.0	1381.0	*	26	APR	0733	152	166.	3.8	1384.0	*	26	APR	1233	252	220.	23.9	138
26	APR	0236	53	0.	.0	1381.0	*	26	APR	0736	153	220.	5.9	1385.1	*	26	APR	1236	253	220.	23.2	138
26	APR	0239	54	0.	.0	1381.0	*	26	APR	0739	154	220.	8.7	1385.6	*	26	APR	1239	254	220.	22.4	138
26	APR	0242	55	0.	.0	1381.0	*	26	APR	0742	155	220.	12.2	1386.2	*	26	APR	1242	255	220.	21.6	138
26	APR	0245	56	0.	.0	1381.0	*	26	APR	0745	156	220.	16.3	1386.9	*	26	APR	1245	256	220.	20.9	138
26	APR	0248	57	0.	.0	1381.0	*	26	APR	0748	157	220.	20.7	1387.6	*	26	APR	1248	257	220.	20.1	138
26	APR	0251	58	0.	.0	1381.0	*	26	APR	0751	158	220.	25.2	1388.4	*	26	APR	1251	258	220.	19.3	138
26	APR	0254	59	0.	.0	1381.0	*	26	APR	0754	159	220.	29.8	1389.1	*	26	APR	1254	259	220.	18.6	138
26	APR	0257	60	0.	.0	1381.0	*	26	APR	0757	160	220.	34.3	1389.9	*	26	APR	1257	260	220.	17.8	138
26	APR	0300	61	0.	.0	1381.0	*	26	APR	0800	161	220.	38.6	1390.3	*	26	APR	1300	261	220.	17.1	138
26	APR	0303	62	0.	.0	1381.0	*	26	APR	0803	162	220.	42.6	1390.7	*	26	APR	1303	262	220.	16.3	138
26	APR	0306	63	0.	.0	1381.0	*	26	APR	0806	163	220.	46.5	1391.1	*	26	APR	1306	263	220.	15.5	138
26	APR	0309	64	0.	.0	1381.0	*	26	APR	0809	164	220.	50.0	1391.4	*	26	APR	1309	264	220.	14.7	138
26	APR	0312	65	0.	.0	1381.0	*	26	APR	0812	165	220.	53.1	1391.7	*	26	APR	1312	265	220.	14.0	138
26	APR	0315	66	0.	.0	1381.0	*	26	APR	0815	166	220.	56.0	1392.0	*	26	APR	1315	266	220.	13.2	138
26	APR	0318	67	0.	.0	1381.0	*	26	APR	0818	167	220.	58.5	1392.2	*	26	APR	1318	267	220.	12.4	138
26	APR	0321	68	0.	.0	1381.0	*	26	APR	0821	168	220.	60.7	1392.4	*	26	APR	1321	268	220.	11.6	138
26	APR	0324	69	0.	.0	1381.0	*	26	APR	0824	169	220.	62.5	1392.6	*	26	APR	1324	269	220.	10.9	138
26	APR	0327	70	0.	.0	1381.0	*	26	APR	0827	170	220.	64.1	1392.7	*	26	APR	1327	270	220.	10.1	138
26	APR	0330	71	0.	.0	1381.0	*	26	APR	0830	171	220.	65.4	1392.9	*	26	APR	1330	271	220.	9.3	138
26	APR	0333	72	0.	.0	1381.0	*	26	APR	0833	172	220.	66.4	1393.0	*	26	APR	1333	272	220.	8.5	138
26	APR	0336	73	0.	.0	1381.0	*	26	APR	0836	173	220.	67.3	1393.0	*	26	APR	1336	273	220.	7.8	138
26	APR	0339	74	0.	.0	1381.0	*	26	APR	0839	174	220.	67.9	1393.1	*	26	APR	1339	274	220.	7.0	138
26	APR	0342	75	0.	.0	1381.0	*	26	APR	0842	175	220.	68.5	1393.2	*	26	APR	1342	275	220.	6.2	138
26	APR	0345	76	0.	.0	1381.0	*	26	APR	0845	176	220.	68.8	1393.2	*	26	APR	1345	276	220.	5.4	138
26	APR	0348	77	0.	.0	1381.0	*	26	APR	0848	177	220.	69.1	1393.2	*	26	APR	1348	277	205.	4.7	138
26	APR	0351	78	0.	.0	1381.0	*	26	APR	0851	178	220.	69.2	1393.2	*	26	APR	1351	278	175.	4.0	138
26	APR	0354	79	0.	.0	1381.0	*	26	APR	0854	179	220.	69.3	1393.2	*	26	APR	1354	279	151.	3.4	138
26	APR	0357	80	0.	.0	1381.0	*	26	APR	0857	180	220.	69.3	1393.2	*	26	APR	1357	280	130.	3.0	138
26	APR	0400	81	0.	.0	1381.0	*	26	APR	0900	181	220.	69.2	1393.2	*	26	APR	1400	281	113.	2.6	138
26	APR	0403	82	0.	.0	1381.0	*	26	APR	0903	182	220.	69.0	1393.2	*	26	APR	1403	282	99.	2.3	138
26	APR	0406	83	0.	.0	1381.0	*	26	APR	0906	183	220.	68.8	1393.2	*	26	APR	1406	283	87.	2.0	138
26	APR	0409	84	0.	.0	1381.0	*	26	APR	0909	184	220.	68.5	1393.2	*	26	APR	1409	284	77.	1.8	138
26	APR	0412	85	0.	.0	1381.0	*	26	APR	0912	185	220.	68.2	1393.1	*	26	APR	1412	285	69.	1.6	138
26	APR	0415	86	0.	.0	1381.0	*	26	APR	0915	186	220.	67.8	1393.1	*	26	APR	1415	286	62.	1.4	138
26	APR	0418	87	0.	.0	1381.0	*	26	APR	0918	187	220.	67.5	1393.1	*	26	APR	1418	287	56.	1.3	138
26	APR	0421	88	0.	.0	1381.0	*	26	APR	0921	188	220.	67.0	1393.0	*	26	APR	1421	288	51.	1.2	138
26	APR	0424	89	0.	.0	1381.0	*	26	APR	0924	189	220.	66.6	1393.0	*	26	APR	1424	289	47.	1.1	138
26	APR	0427	90	0.	.0	1381.0	*	26	APR	0927	190	220.	66.1	1392.9	*	26	APR	1427	290	43.	1.0	138
26	APR	0430	91	0.	.0	1381.0	*	26	APR	0930	191	220.	65.7	1392.9	*	26	APR	1430	291	40.	.9	138
26	APR	0433	92	0.	.0	1381.0	*	26	APR	0933	192	220.	65.2	1392.8	*	26	APR	1433	292	38.	.9	138
26	APR	0436	93	0.	.0	1381.0	*	26	APR	0936	193	220.	64.6	1392.8	*	26	APR	1436	293	35.	.8	138
26	APR	0439	94	0.	.0	1381.0	*	26	APR	0939	194	220.	64.1	1392.7	*	26	APR	1439	294	34.	.8	138
26	APR	0442	95	0.	.0	1381.0	*	26	APR	0942	195	220.	63.6	1392.7	*	26	APR	1442	295	32.	.7	138
26	APR	0445	96	0.	.0	1381.0	*	26	APR	0945	196	220.	63.0	1392.6	*	26	APR	1445	296	31.	.7	138
26	APR	0448	97	0.	.0	1381.0	*	26	APR	0948	197	220.	62.4	1392.6	*	26	APR	1448	297	30.	.7	138
26	APR	0451	98	0.	.0	1381.0	*	26	APR	0951	198	220.	61.8	1392.5	*	26	APR	1451	298	29.	.7	138
26	APR	0454	99	0.	.0	1381.0	*	26	APR	0954	199	220.	61.2	1392.5	*	26	APR	1454	299	28.	.6	138
26	APR	0457	100	0.	.0	1381.0	*	26	APR	0957	200	220.	60.6	1392.4	*	26	APR	1457	300	27.	.6	138
							*								*							

****

EAK FLOW (CFS)	TIME (HR)		MAXIMUM AVERAGE FLOW 6-HR	24-HR	72-HR	14.95-HR
220.	7.60	(CFS)	220.	98.	98.	98.
		(INCHES)	1.373	1.528	1.528	1.528
		(AC-FT)	109.	121.	121.	121.

AK STORAGE (AC-FT)	TIME (HR)	MAXIMUM AVERAGE STORAGE 6-HR	24-HR	72-HR	14.95-HR

```
   89.       8.90                    43.          18.          18.          18.

PEAK STAGE    TIME                              MAXIMUM AVERAGE STAGE
  (FEET)      (HR)                    6-HR        24-HR        72-HR      14.95-HR
 1393.24      8.90                 1390.43      1384.97      1384.97      1384.97

                        CUMULATIVE AREA =    1.49 SQ MI


* *** *** *** *** *** *** *** *** *** *** *** *** *** *** *** *** *** *** *** *** *** *** *** *** *** *** *** *** *** *** *** *** ***


            **************
            *            *
 11 KK      *     COMB6  *
            *            *
            **************

 113 KO          OUTPUT CONTROL VARIABLES
                      IPRNT            1  PRINT CONTROL
                      IPLOT            0  PLOT CONTROL
                      QSCAL           0.  HYDROGRAPH PLOT SCALE

 114 HC          HYDROGRAPH COMBINATION
                      ICOMP            2  NUMBER OF HYDROGRAPHS TO COMBINE

                                                        ***
*****************************************************************************************************************************

                                    HYDROGRAPH AT STATION    COMB6
                                         SUM OF  2 HYDROGRAPHS
*****************************************************************************************************************************
```

DA MON HRMN	ORD	FLOW	*	DA MON HRMN	ORD	FLOW	*	DA MON HRMN	ORD	FLOW	*	DA MON HRMN	ORD	FLOW
26 APR 0000	1	0.	*	26 APR 0345	76	0.	*	26 APR 0730	151	224.	*	26 APR 1115	226	229.
26 APR 0003	2	0.	*	26 APR 0348	77	0.	*	26 APR 0733	152	363.	*	26 APR 1118	227	228.
26 APR 0006	3	0.	*	26 APR 0351	78	0.	*	26 APR 0736	153	504.	*	26 APR 1121	228	228.
26 APR 0009	4	0.	*	26 APR 0354	79	0.	*	26 APR 0739	154	576.	*	26 APR 1124	229	228.
26 APR 0012	5	0.	*	26 APR 0357	80	0.	*	26 APR 0742	155	614.	*	26 APR 1127	230	228.
26 APR 0015	6	0.	*	26 APR 0400	81	0.	*	26 APR 0745	156	618.	*	26 APR 1130	231	228.
26 APR 0018	7	0.	*	26 APR 0403	82	0.	*	26 APR 0748	157	593.	*	26 APR 1133	232	228.
26 APR 0021	8	0.	*	26 APR 0406	83	0.	*	26 APR 0751	158	552.	*	26 APR 1136	233	228.
26 APR 0024	9	0.	*	26 APR 0409	84	0.	*	26 APR 0754	159	509.	*	26 APR 1139	234	228.
26 APR 0027	10	0.	*	26 APR 0412	85	0.	*	26 APR 0757	160	471.	*	26 APR 1142	235	228.
26 APR 0030	11	0.	*	26 APR 0415	86	0.	*	26 APR 0800	161	438.	*	26 APR 1145	236	228.
26 APR 0033	12	0.	*	26 APR 0418	87	0.	*	26 APR 0803	162	408.	*	26 APR 1148	237	228.
26 APR 0036	13	0.	*	26 APR 0421	88	0.	*	26 APR 0806	163	379.	*	26 APR 1151	238	228.
26 APR 0039	14	0.	*	26 APR 0424	89	0.	*	26 APR 0809	164	351.	*	26 APR 1154	239	227.
26 APR 0042	15	0.	*	26 APR 0427	90	0.	*	26 APR 0812	165	327.	*	26 APR 1157	240	227.
26 APR 0045	16	0.	*	26 APR 0430	91	0.	*	26 APR 0815	166	306.	*	26 APR 1200	241	227.
26 APR 0048	17	0.	*	26 APR 0433	92	0.	*	26 APR 0818	167	290.	*	26 APR 1203	242	227.
26 APR 0051	18	0.	*	26 APR 0436	93	0.	*	26 APR 0821	168	278.	*	26 APR 1206	243	227.
26 APR 0054	19	0.	*	26 APR 0439	94	0.	*	26 APR 0824	169	268.	*	26 APR 1209	244	227.
26 APR 0057	20	0.	*	26 APR 0442	95	0.	*	26 APR 0827	170	262.	*	26 APR 1212	245	227.
26 APR 0100	21	0.	*	26 APR 0445	96	0.	*	26 APR 0830	171	256.	*	26 APR 1215	246	227.
26 APR 0103	22	0.	*	26 APR 0448	97	0.	*	26 APR 0833	172	252.	*	26 APR 1218	247	227.
26 APR 0106	23	0.	*	26 APR 0451	98	0.	*	26 APR 0836	173	249.	*	26 APR 1221	248	227.
26 APR 0109	24	0.	*	26 APR 0454	99	0.	*	26 APR 0839	174	246.	*	26 APR 1224	249	227.
26 APR 0112	25	0.	*	26 APR 0457	100	0.	*	26 APR 0842	175	244.	*	26 APR 1227	250	227.
26 APR 0115	26	0.	*	26 APR 0500	101	0.	*	26 APR 0845	176	242.	*	26 APR 1230	251	227.
26 APR 0118	27	0.	*	26 APR 0503	102	0.	*	26 APR 0848	177	241.	*	26 APR 1233	252	227.

26 APR 0121	28	0.	*	26 APR 0506	103	0.	*	26 APR 0851	178	240.	*	26 APR 1236	253	227
26 APR 0124	29	0.	*	26 APR 0509	104	0.	*	26 APR 0854	179	239.	*	26 APR 1239	254	227
26 APR 0127	30	0.	*	26 APR 0512	105	0.	*	26 APR 0857	180	238.	*	26 APR 1242	255	226
26 APR 0130	31	0.	*	26 APR 0515	106	0.	*	26 APR 0900	181	237.	*	26 APR 1245	256	226
26 APR 0133	32	0.	*	26 APR 0518	107	0.	*	26 APR 0903	182	237.	*	26 APR 1248	257	226
26 APR 0136	33	0.	*	26 APR 0521	108	0.	*	26 APR 0906	183	236.	*	26 APR 1251	258	226
26 APR 0139	34	0.	*	26 APR 0524	109	0.	*	26 APR 0909	184	236.	*	26 APR 1254	259	226
26 APR 0142	35	0.	*	26 APR 0527	110	0.	*	26 APR 0912	185	235.	*	26 APR 1257	260	226.
26 APR 0145	36	0.	*	26 APR 0530	111	0.	*	26 APR 0915	186	235.	*	26 APR 1300	261	226.
26 APR 0148	37	0.	*	26 APR 0533	112	0.	*	26 APR 0918	187	235.	*	26 APR 1303	262	226.
26 APR 0151	38	0.	*	26 APR 0536	113	0.	*	26 APR 0921	188	235.	*	26 APR 1306	263	226
26 APR 0154	39	0.	*	26 APR 0539	114	0.	*	26 APR 0924	189	234.	*	26 APR 1309	264	226
26 APR 0157	40	0.	*	26 APR 0542	115	0.	*	26 APR 0927	190	234.	*	26 APR 1312	265	226.
26 APR 0200	41	0.	*	26 APR 0545	116	0.	*	26 APR 0930	191	234.	*	26 APR 1315	266	226.
26 APR 0203	42	0.	*	26 APR 0548	117	0.	*	26 APR 0933	192	233.	*	26 APR 1318	267	226
26 APR 0206	43	0.	*	26 APR 0551	118	0.	*	26 APR 0936	193	233.	*	26 APR 1321	268	226
26 APR 0209	44	0.	*	26 APR 0554	119	0.	*	26 APR 0939	194	233.	*	26 APR 1324	269	226
26 APR 0212	45	0.	*	26 APR 0557	120	0.	*	26 APR 0942	195	232.	*	26 APR 1327	270	226.
26 APR 0215	46	0.	*	26 APR 0600	121	0.	*	26 APR 0945	196	232.	*	26 APR 1330	271	226.
26 APR 0218	47	0.	*	26 APR 0603	122	0.	*	26 APR 0948	197	232.	*	26 APR 1333	272	226
26 APR 0221	48	0.	*	26 APR 0606	123	0.	*	26 APR 0951	198	232.	*	26 APR 1336	273	226
26 APR 0224	49	0.	*	26 APR 0609	124	0.	*	26 APR 0954	199	231.	*	26 APR 1339	274	225
26 APR 0227	50	0.	*	26 APR 0612	125	0.	*	26 APR 0957	200	231.	*	26 APR 1342	275	225.
26 APR 0230	51	0.	*	26 APR 0615	126	0.	*	26 APR 1000	201	231.	*	26 APR 1345	276	225
26 APR 0233	52	0.	*	26 APR 0618	127	0.	*	26 APR 1003	202	231.	*	26 APR 1348	277	210
26 APR 0236	53	0.	*	26 APR 0621	128	0.	*	26 APR 1006	203	231.	*	26 APR 1351	278	180.
26 APR 0239	54	0.	*	26 APR 0624	129	0.	*	26 APR 1009	204	230.	*	26 APR 1354	279	156.
26 APR 0242	55	0.	*	26 APR 0627	130	0.	*	26 APR 1012	205	230.	*	26 APR 1357	280	135.
26 APR 0245	56	0.	*	26 APR 0630	131	0.	*	26 APR 1015	206	230.	*	26 APR 1400	281	118.
26 APR 0248	57	0.	*	26 APR 0633	132	0.	*	26 APR 1018	207	230.	*	26 APR 1403	282	104.
26 APR 0251	58	0.	*	26 APR 0636	133	0.	*	26 APR 1021	208	230.	*	26 APR 1406	283	92
26 APR 0254	59	0.	*	26 APR 0639	134	0.	*	26 APR 1024	209	230.	*	26 APR 1409	284	82
26 APR 0257	60	0.	*	26 APR 0642	135	0.	*	26 APR 1027	210	229.	*	26 APR 1412	285	73.
26 APR 0300	61	0.	*	26 APR 0645	136	0.	*	26 APR 1030	211	229.	*	26 APR 1415	286	66
26 APR 0303	62	0.	*	26 APR 0648	137	0.	*	26 APR 1033	212	229.	*	26 APR 1418	287	60
26 APR 0306	63	0.	*	26 APR 0651	138	0.	*	26 APR 1036	213	229.	*	26 APR 1421	288	55
26 APR 0309	64	0.	*	26 APR 0654	139	0.	*	26 APR 1039	214	229.	*	26 APR 1424	289	51
26 APR 0312	65	0.	*	26 APR 0657	140	0.	*	26 APR 1042	215	229.	*	26 APR 1427	290	48
26 APR 0315	66	0.	*	26 APR 0700	141	0.	*	26 APR 1045	216	229.	*	26 APR 1430	291	45
26 APR 0318	67	0.	*	26 APR 0703	142	1.	*	26 APR 1048	217	229.	*	26 APR 1433	292	42
26 APR 0321	68	0.	*	26 APR 0706	143	3.	*	26 APR 1051	218	229.	*	26 APR 1436	293	40
26 APR 0324	69	0.	*	26 APR 0709	144	6.	*	26 APR 1054	219	229.	*	26 APR 1439	294	38
26 APR 0327	70	0.	*	26 APR 0712	145	12.	*	26 APR 1057	220	229.	*	26 APR 1442	295	37
26 APR 0330	71	0.	*	26 APR 0715	146	21.	*	26 APR 1100	221	229.	*	26 APR 1445	296	35
26 APR 0333	72	0.	*	26 APR 0718	147	34.	*	26 APR 1103	222	229.	*	26 APR 1448	297	34
26 APR 0336	73	0.	*	26 APR 0721	148	53.	*	26 APR 1106	223	229.	*	26 APR 1451	298	33
26 APR 0339	74	0.	*	26 APR 0724	149	83.	*	26 APR 1109	224	229.	*	26 APR 1454	299	32
26 APR 0342	75	0.	*	26 APR 0727	150	134.	*	26 APR 1112	225	229.	*	26 APR 1457	300	31
			*				*				*			

****

PEAK FLOW (CFS)	TIME (HR)		MAXIMUM AVERAGE FLOW 6-HR	24-HR	72-HR	14.95-HR
618.	7.75	(CFS)	262.	117.	117.	117.
		(INCHES)	1.375	1.527	1.527	1.527
		(AC-FT)	130.	144.	144.	144.

CUMULATIVE AREA = 1.77 SQ MI

ARNING *** TIME INTERVAL IS GREATER THAN .29*LAG

** ***

```
                **************
                *            *
.30 KK          *   COMB1A   *
                *            *
                **************

.32 KO          OUTPUT CONTROL VARIABLES
                      IPRNT          1  PRINT CONTROL
                      IPLOT          0  PLOT CONTROL
                      QSCAL         0.  HYDROGRAPH PLOT SCALE

.33 HC          HYDROGRAPH COMBINATION
                      ICOMP          3  NUMBER OF HYDROGRAPHS TO COMBINE

                                                  ***
```

HYDROGRAPH AT STATION COMB1A
SUM OF 3 HYDROGRAPHS

DA	MON	HRMN	ORD	FLOW	DA	MON	HRMN	ORD	FLOW	DA	MON	HRMN	ORD	FLOW	DA	MON	HRMN	ORD	FLOW
26	APR	0000	1	0.	26	APR	0345	76	0.	26	APR	0730	151	95.	26	APR	1115	226	6.
26	APR	0003	2	0.	26	APR	0348	77	0.	26	APR	0733	152	149.	26	APR	1118	227	6.
26	APR	0006	3	0.	26	APR	0351	78	0.	26	APR	0736	153	200.	26	APR	1121	228	6.
26	APR	0009	4	0.	26	APR	0354	79	0.	26	APR	0739	154	236.	26	APR	1124	229	6.
26	APR	0012	5	0.	26	APR	0357	80	0.	26	APR	0742	155	253.	26	APR	1127	230	6.
26	APR	0015	6	0.	26	APR	0400	81	0.	26	APR	0745	156	254.	26	APR	1130	231	6.
26	APR	0018	7	0.	26	APR	0403	82	0.	26	APR	0748	157	241.	26	APR	1133	232	5.
26	APR	0021	8	0.	26	APR	0406	83	0.	26	APR	0751	158	218.	26	APR	1136	233	5.
26	APR	0024	9	0.	26	APR	0409	84	0.	26	APR	0754	159	192.	26	APR	1139	234	5.
26	APR	0027	10	0.	26	APR	0412	85	0.	26	APR	0757	160	169.	26	APR	1142	235	5.
26	APR	0030	11	0.	26	APR	0415	86	0.	26	APR	0800	161	147.	26	APR	1145	236	5.
26	APR	0033	12	0.	26	APR	0418	87	0.	26	APR	0803	162	127.	26	APR	1148	237	5.
26	APR	0036	13	0.	26	APR	0421	88	0.	26	APR	0806	163	107.	26	APR	1151	238	5.
26	APR	0039	14	0.	26	APR	0424	89	0.	26	APR	0809	164	89.	26	APR	1154	239	5.
26	APR	0042	15	0.	26	APR	0427	90	0.	26	APR	0812	165	73.	26	APR	1157	240	5.
26	APR	0045	16	0.	26	APR	0430	91	0.	26	APR	0815	166	60.	26	APR	1200	241	5.
26	APR	0048	17	0.	26	APR	0433	92	0.	26	APR	0818	167	49.	26	APR	1203	242	5.
26	APR	0051	18	0.	26	APR	0436	93	0.	26	APR	0821	168	41.	26	APR	1206	243	5.
26	APR	0054	19	0.	26	APR	0439	94	0.	26	APR	0824	169	35.	26	APR	1209	244	5.
26	APR	0057	20	0.	26	APR	0442	95	0.	26	APR	0827	170	30.	26	APR	1212	245	5.
26	APR	0100	21	0.	26	APR	0445	96	0.	26	APR	0830	171	26.	26	APR	1215	246	5.
26	APR	0103	22	0.	26	APR	0448	97	0.	26	APR	0833	172	23.	26	APR	1218	247	5.
26	APR	0106	23	0.	26	APR	0451	98	0.	26	APR	0836	173	21.	26	APR	1221	248	5.
26	APR	0109	24	0.	26	APR	0454	99	0.	26	APR	0839	174	19.	26	APR	1224	249	5.
26	APR	0112	25	0.	26	APR	0457	100	0.	26	APR	0842	175	17.	26	APR	1227	250	5.
26	APR	0115	26	0.	26	APR	0500	101	0.	26	APR	0845	176	16.	26	APR	1230	251	5.
26	APR	0118	27	0.	26	APR	0503	102	0.	26	APR	0848	177	15.	26	APR	1233	252	4.
26	APR	0121	28	0.	26	APR	0506	103	0.	26	APR	0851	178	14.	26	APR	1236	253	4.
26	APR	0124	29	0.	26	APR	0509	104	0.	26	APR	0854	179	13.	26	APR	1239	254	4.
26	APR	0127	30	0.	26	APR	0512	105	0.	26	APR	0857	180	12.	26	APR	1242	255	4.
26	APR	0130	31	0.	26	APR	0515	106	0.	26	APR	0900	181	12.	26	APR	1245	256	4.
26	APR	0133	32	0.	26	APR	0518	107	0.	26	APR	0903	182	11.	26	APR	1248	257	4.
26	APR	0136	33	0.	26	APR	0521	108	0.	26	APR	0906	183	11.	26	APR	1251	258	4.
26	APR	0139	34	0.	26	APR	0524	109	0.	26	APR	0909	184	11.	26	APR	1254	259	4.
26	APR	0142	35	0.	26	APR	0527	110	0.	26	APR	0912	185	11.	26	APR	1257	260	4.
26	APR	0145	36	0.	26	APR	0530	111	0.	26	APR	0915	186	10.	26	APR	1300	261	4.
26	APR	0148	37	0.	26	APR	0533	112	0.	26	APR	0918	187	10.	26	APR	1303	262	4.
26	APR	0151	38	0.	26	APR	0536	113	0.	26	APR	0921	188	10.	26	APR	1306	263	4.
26	APR	0154	39	0.	26	APR	0539	114	0.	26	APR	0924	189	10.	26	APR	1309	264	4.
26	APR	0157	40	0.	26	APR	0542	115	0.	26	APR	0927	190	9.	26	APR	1312	265	4.

26 APR [illegible]	41	0.	*	26 APR 0545	116	0.	*	26 APR 0930	191	9.	*	26 APR 1315	266	4.
26 APR 0203	42	0.	*	26 APR 0548	117	0.	*	26 APR 0933	192	9.	*	26 APR 1318	267	4.
26 APR 0206	43	0.	*	26 APR 0551	118	0.	*	26 APR 0936	193	9.	*	26 APR 1321	268	4.
26 APR 0209	44	0.	*	26 APR 0554	119	0.	*	26 APR 0939	194	9.	*	26 APR 1324	269	4.
26 APR 0212	45	0.	*	26 APR 0557	120	0.	*	26 APR 0942	195	8.	*	26 APR 1327	270	4.
26 APR 0215	46	0.	*	26 APR 0600	121	0.	*	26 APR 0945	196	8.	*	26 APR 1330	271	4.
26 APR 0218	47	0.	*	26 APR 0603	122	0.	*	26 APR 0948	197	8.	*	26 APR 1333	272	4.
26 APR 0221	48	0.	*	26 APR 0606	123	0.	*	26 APR 0951	198	8.	*	26 APR 1336	273	4.
26 APR 0224	49	0.	*	26 APR 0609	124	0.	*	26 APR 0954	199	8.	*	26 APR 1339	274	4.
26 APR 0227	50	0.	*	26 APR 0612	125	0.	*	26 APR 0957	200	8.	*	26 APR 1342	275	4.
26 APR 0230	51	0.	*	26 APR 0615	126	0.	*	26 APR 1000	201	7.	*	26 APR 1345	276	4.
26 APR 0233	52	0.	*	26 APR 0618	127	0.	*	26 APR 1003	202	7.	*	26 APR 1348	277	3.
26 APR 0236	53	0.	*	26 APR 0621	128	0.	*	26 APR 1006	203	7.	*	26 APR 1351	278	3.
26 APR 0239	54	0.	*	26 APR 0624	129	0.	*	26 APR 1009	204	7.	*	26 APR 1354	279	3.
26 APR 0242	55	0.	*	26 APR 0627	130	0.	*	26 APR 1012	205	7.	*	26 APR 1357	280	3.
26 APR 0245	56	0.	*	26 APR 0630	131	0.	*	26 APR 1015	206	7.	*	26 APR 1400	281	3.
26 APR 0248	57	0.	*	26 APR 0633	132	0.	*	26 APR 1018	207	7.	*	26 APR 1403	282	3.
26 APR 0251	58	0.	*	26 APR 0636	133	0.	*	26 APR 1021	208	7.	*	26 APR 1406	283	3.
26 APR 0254	59	0.	*	26 APR 0639	134	0.	*	26 APR 1024	209	7.	*	26 APR 1409	284	3.
26 APR 0257	60	0.	*	26 APR 0642	135	0.	*	26 APR 1027	210	6.	*	26 APR 1412	285	3.
26 APR 0300	61	0.	*	26 APR 0645	136	0.	*	26 APR 1030	211	6.	*	26 APR 1415	286	3.
26 APR 0303	62	0.	*	26 APR 0648	137	0.	*	26 APR 1033	212	6.	*	26 APR 1418	287	3.
26 APR 0306	63	0.	*	26 APR 0651	138	0.	*	26 APR 1036	213	6.	*	26 APR 1421	288	3.
26 APR 0309	64	0.	*	26 APR 0654	139	0.	*	26 APR 1039	214	6.	*	26 APR 1424	289	3.
26 APR 0312	65	0.	*	26 APR 0657	140	0.	*	26 APR 1042	215	6.	*	26 APR 1427	290	3.
26 APR 0315	66	0.	*	26 APR 0700	141	0.	*	26 APR 1045	216	6.	*	26 APR 1430	291	3.
26 APR 0318	67	0.	*	26 APR 0703	142	1.	*	26 APR 1048	217	6.	*	26 APR 1433	292	3.
26 APR 0321	68	0.	*	26 APR 0706	143	2.	*	26 APR 1051	218	6.	*	26 APR 1436	293	3.
26 APR 0324	69	0.	*	26 APR 0709	144	3.	*	26 APR 1054	219	6.	*	26 APR 1439	294	3.
26 APR 0327	70	0.	*	26 APR 0712	145	5.	*	26 APR 1057	220	6.	*	26 APR 1442	295	3.
26 APR 0330	71	0.	*	26 APR 0715	146	9.	*	26 APR 1100	221	6.	*	26 APR 1445	296	3.
26 APR 0333	72	0.	*	26 APR 0718	147	14.	*	26 APR 1103	222	6.	*	26 APR 1448	297	3.
26 APR 0336	73	0.	*	26 APR 0721	148	21.	*	26 APR 1106	223	6.	*	26 APR 1451	298	3.
26 APR 0339	74	0.	*	26 APR 0724	149	32.	*	26 APR 1109	224	6.	*	26 APR 1454	299	3.
26 APR 0342	75	0.	*	26 APR 0727	150	54.	*	26 APR 1112	225	6.	*	26 APR 1457	300	3.
			*				*				*			

****

PEAK FLOW (CFS)	TIME (HR)		MAXIMUM AVERAGE FLOW 6-HR	24-HR	72-HR	14.95-HR
254.	7.75	(CFS)	30.	13.	13.	13.
		(INCHES)	1.473	1.525	1.525	1.525
		(AC-FT)	15.	15.	15.	15.

CUMULATIVE AREA = .19 SQ MI

** ***

```
          **************
          *            *
34 KK     *    SUB26   *
          *            *
          **************
```

36 KO OUTPUT CONTROL VARIABLES

IPRNT	1	PRINT CONTROL
IPLOT	0	PLOT CONTROL
QSCAL	0.	HYDROGRAPH PLOT SCALE

SUBBASIN RUNOFF DATA

37 BA SUBBASIN CHARACTERISTICS

```
                 TAREA          .06  SUBBASIN AREA

            PRECIPITATION DATA

 9 PH                                  DEPTHS FOR   0-PERCENT HYPOTHETICAL STORM
            ..... HYDRO-35 .....   ............... TP-40 ...............   ........... TP-49 ...........
            5-MIN  15-MIN  60-MIN    2-HR    3-HR    6-HR   12-HR   24-HR   2-DAY   4-DAY   7-DAY  10-DAY
              .65    1.28    2.25    2.44    2.56    2.80    3.10    3.40     .00     .00     .00     .00

                                                STORM AREA =      .06

138 LS      SCS LOSS RATE
                 STRTL          .44  INITIAL ABSTRACTION
                CRVNBR        82.00  CURVE NUMBER
                 RTIMP          .00  PERCENT IMPERVIOUS AREA

139 UD      SCS DIMENSIONLESS UNITGRAPH
                  TLAG          .18  LAG

                                                  ***

                                              UNIT HYDROGRAPH
                                         20 END-OF-PERIOD ORDINATES
            19.      61.     118.     139.     130.     103.      67.      44.      31.      20.
            14.       9.       6.       4.       3.       2.       1.       1.       1.       0.
```

****

HYDROGRAPH AT STATION SUB26

****

DA	MON	HRMN	ORD	RAIN	LOSS	EXCESS	COMP Q	*	DA	MON	HRMN	ORD	RAIN	LOSS	EXCESS	COMP Q
								*								
26	APR	0000	1	.00	.00	.00	0.	*	26	APR	0730	151	.39	.16	.23	35.
26	APR	0003	2	.00	.00	.00	0.	*	26	APR	0733	152	.22	.08	.15	57.
26	APR	0006	3	.00	.00	.00	0.	*	26	APR	0736	153	.15	.05	.10	78.
26	APR	0009	4	.00	.00	.00	0.	*	26	APR	0739	154	.10	.03	.07	91.
26	APR	0012	5	.00	.00	.00	0.	*	26	APR	0742	155	.09	.02	.06	94.
26	APR	0015	6	.00	.00	.00	0.	*	26	APR	0745	156	.06	.02	.04	87.
26	APR	0018	7	.00	.00	.00	0.	*	26	APR	0748	157	.05	.01	.04	76.
26	APR	0021	8	.00	.00	.00	0.	*	26	APR	0751	158	.05	.01	.04	65.
26	APR	0024	9	.00	.00	.00	0.	*	26	APR	0754	159	.05	.01	.03	55.
26	APR	0027	10	.00	.00	.00	0.	*	26	APR	0757	160	.04	.01	.03	47.
26	APR	0030	11	.00	.00	.00	0.	*	26	APR	0800	161	.01	.00	.01	40.
26	APR	0033	12	.00	.00	.00	0.	*	26	APR	0803	162	.01	.00	.01	34.
26	APR	0036	13	.00	.00	.00	0.	*	26	APR	0806	163	.01	.00	.01	28.
26	APR	0039	14	.00	.00	.00	0.	*	26	APR	0809	164	.01	.00	.01	22.
26	APR	0042	15	.00	.00	.00	0.	*	26	APR	0812	165	.01	.00	.01	18.
26	APR	0045	16	.00	.00	.00	0.	*	26	APR	0815	166	.01	.00	.01	14.
26	APR	0048	17	.00	.00	.00	0.	*	26	APR	0818	167	.01	.00	.01	11.
26	APR	0051	18	.00	.00	.00	0.	*	26	APR	0821	168	.01	.00	.01	9.
26	APR	0054	19	.00	.00	.00	0.	*	26	APR	0824	169	.01	.00	.01	8.
26	APR	0057	20	.00	.00	.00	0.	*	26	APR	0827	170	.01	.00	.01	7.
26	APR	0100	21	.00	.00	.00	0.	*	26	APR	0830	171	.01	.00	.01	6.
26	APR	0103	22	.00	.00	.00	0.	*	26	APR	0833	172	.01	.00	.01	6.
26	APR	0106	23	.00	.00	.00	0.	*	26	APR	0836	173	.01	.00	.01	5.
26	APR	0109	24	.00	.00	.00	0.	*	26	APR	0839	174	.01	.00	.00	5.
26	APR	0112	25	.00	.00	.00	0.	*	26	APR	0842	175	.01	.00	.00	5.
26	APR	0115	26	.00	.00	.00	0.	*	26	APR	0845	176	.01	.00	.00	4.
26	APR	0118	27	.00	.00	.00	0.	*	26	APR	0848	177	.01	.00	.00	4.
26	APR	0121	28	.00	.00	.00	0.	*	26	APR	0851	178	.01	.00	.00	4.
26	APR	0124	29	.00	.00	.00	0.	*	26	APR	0854	179	.01	.00	.00	4.
26	APR	0127	30	.00	.00	.00	0.	*	26	APR	0857	180	.01	.00	.00	4.
26	APR	0130	31	.00	.00	.00	0.	*	26	APR	0900	181	.01	.00	.00	3.
26	APR	0133	32	.00	.00	.00	0.	*	26	APR	0903	182	.01	.00	.00	3.

26	APR	0136	33	.00	.00	.00	0.	*	26	APR	0906	183	.01	.00	.00	3.
26	APR	0139	34	.00	.00	.00	0.	*	26	APR	0909	184	.01	.00	.00	3.
26	APR	0142	35	.00	.00	.00	0.	*	26	APR	0912	185	.00	.00	.00	3.
26	APR	0145	36	.00	.00	.00	0.	*	26	APR	0915	186	.00	.00	.00	3.
26	APR	0148	37	.00	.00	.00	0.	*	26	APR	0918	187	.00	.00	.00	3.
26	APR	0151	38	.00	.00	.00	0.	*	26	APR	0921	188	.00	.00	.00	3.
26	APR	0154	39	.00	.00	.00	0.	*	26	APR	0924	189	.00	.00	.00	3.
26	APR	0157	40	.00	.00	.00	0.	*	26	APR	0927	190	.00	.00	.00	3.
26	APR	0200	41	.00	.00	.00	0.	*	26	APR	0930	191	.00	.00	.00	3.
26	APR	0203	42	.00	.00	.00	0.	*	26	APR	0933	192	.00	.00	.00	3.
26	APR	0206	43	.00	.00	.00	0.	*	26	APR	0936	193	.00	.00	.00	3.
26	APR	0209	44	.00	.00	.00	0.	*	26	APR	0939	194	.00	.00	.00	3.
26	APR	0212	45	.00	.00	.00	0.	*	26	APR	0942	195	.00	.00	.00	3.
26	APR	0215	46	.00	.00	.00	0.	*	26	APR	0945	196	.00	.00	.00	3.
26	APR	0218	47	.00	.00	.00	0.	*	26	APR	0948	197	.00	.00	.00	3.
26	APR	0221	48	.00	.00	.00	0.	*	26	APR	0951	198	.00	.00	.00	2.
26	APR	0224	49	.00	.00	.00	0.	*	26	APR	0954	199	.00	.00	.00	2.
26	APR	0227	50	.00	.00	.00	0.	*	26	APR	0957	200	.00	.00	.00	2.
26	APR	0230	51	.00	.00	.00	0.	*	26	APR	1000	201	.00	.00	.00	2.
26	APR	0233	52	.00	.00	.00	0.	*	26	APR	1003	202	.00	.00	.00	2.
26	APR	0236	53	.00	.00	.00	0.	*	26	APR	1006	203	.00	.00	.00	2.
26	APR	0239	54	.00	.00	.00	0.	*	26	APR	1009	204	.00	.00	.00	2.
26	APR	0242	55	.00	.00	.00	0.	*	26	APR	1012	205	.00	.00	.00	2.
26	APR	0245	56	.00	.00	.00	0.	*	26	APR	1015	206	.00	.00	.00	2.
26	APR	0248	57	.00	.00	.00	0.	*	26	APR	1018	207	.00	.00	.00	2.
26	APR	0251	58	.00	.00	.00	0.	*	26	APR	1021	208	.00	.00	.00	2.
26	APR	0254	59	.00	.00	.00	0.	*	26	APR	1024	209	.00	.00	.00	2.
26	APR	0257	60	.00	.00	.00	0.	*	26	APR	1027	210	.00	.00	.00	2.
26	APR	0300	61	.00	.00	.00	0.	*	26	APR	1030	211	.00	.00	.00	2.
26	APR	0303	62	.00	.00	.00	0.	*	26	APR	1033	212	.00	.00	.00	2.
26	APR	0306	63	.00	.00	.00	0.	*	26	APR	1036	213	.00	.00	.00	2.
26	APR	0309	64	.00	.00	.00	0.	*	26	APR	1039	214	.00	.00	.00	2.
26	APR	0312	65	.00	.00	.00	0.	*	26	APR	1042	215	.00	.00	.00	2.
26	APR	0315	66	.00	.00	.00	0.	*	26	APR	1045	216	.00	.00	.00	2.
26	APR	0318	67	.00	.00	.00	0.	*	26	APR	1048	217	.00	.00	.00	2.
26	APR	0321	68	.00	.00	.00	0.	*	26	APR	1051	218	.00	.00	.00	2.
26	APR	0324	69	.00	.00	.00	0.	*	26	APR	1054	219	.00	.00	.00	2.
26	APR	0327	70	.00	.00	.00	0.	*	26	APR	1057	220	.00	.00	.00	2.
26	APR	0330	71	.00	.00	.00	0.	*	26	APR	1100	221	.00	.00	.00	2.
26	APR	0333	72	.00	.00	.00	0.	*	26	APR	1103	222	.00	.00	.00	2.
26	APR	0336	73	.00	.00	.00	0.	*	26	APR	1106	223	.00	.00	.00	2.
26	APR	0339	74	.00	.00	.00	0.	*	26	APR	1109	224	.00	.00	.00	2.
26	APR	0342	75	.00	.00	.00	0.	*	26	APR	1112	225	.00	.00	.00	2.
26	APR	0345	76	.00	.00	.00	0.	*	26	APR	1115	226	.00	.00	.00	2.
26	APR	0348	77	.00	.00	.00	0.	*	26	APR	1118	227	.00	.00	.00	2.
26	APR	0351	78	.00	.00	.00	0.	*	26	APR	1121	228	.00	.00	.00	2.
26	APR	0354	79	.00	.00	.00	0.	*	26	APR	1124	229	.00	.00	.00	2.
26	APR	0357	80	.00	.00	.00	0.	*	26	APR	1127	230	.00	.00	.00	2.
26	APR	0400	81	.00	.00	.00	0.	*	26	APR	1130	231	.00	.00	.00	2.
26	APR	0403	82	.00	.00	.00	0.	*	26	APR	1133	232	.00	.00	.00	2.
26	APR	0406	83	.00	.00	.00	0.	*	26	APR	1136	233	.00	.00	.00	2.
26	APR	0409	84	.00	.00	.00	0.	*	26	APR	1139	234	.00	.00	.00	2.
26	APR	0412	85	.00	.00	.00	0.	*	26	APR	1142	235	.00	.00	.00	2.
26	APR	0415	86	.00	.00	.00	0.	*	26	APR	1145	236	.00	.00	.00	2.
26	APR	0418	87	.00	.00	.00	0.	*	26	APR	1148	237	.00	.00	.00	2.
26	APR	0421	88	.00	.00	.00	0.	*	26	APR	1151	238	.00	.00	.00	2.
26	APR	0424	89	.00	.00	.00	0.	*	26	APR	1154	239	.00	.00	.00	2.
26	APR	0427	90	.00	.00	.00	0.	*	26	APR	1157	240	.00	.00	.00	2.
26	APR	0430	91	.00	.00	.00	0.	*	26	APR	1200	241	.00	.00	.00	2.
26	APR	0433	92	.00	.00	.00	0.	*	26	APR	1203	242	.00	.00	.00	2.
26	APR	0436	93	.00	.00	.00	0.	*	26	APR	1206	243	.00	.00	.00	2.
26	APR	0439	94	.00	.00	.00	0.	*	26	APR	1209	244	.00	.00	.00	2.
26	APR	0442	95	.00	.00	.00	0.	*	26	APR	1212	245	.00	.00	.00	1.
26	APR	0445	96	.00	.00	.00	0.	*	26	APR	1215	246	.00	.00	.00	1.
26	APR	0448	97	.00	.00	.00	0.	*	26	APR	1218	247	.00	.00	.00	1.
26	APR	0451	98	.00	.00	.00	0.	*	26	APR	1221	248	.00	.00	.00	1.

26 APR 0454	99	.00	.00	.00	0.	*	26 APR 1224	249	.00	.00	.00	1.
26 APR 0457	100	.00	.00	.00	0.	*	26 APR 1227	250	.00	.00	.00	1.
26 APR 0500	101	.00	.00	.00	0.	*	26 APR 1230	251	.00	.00	.00	1.
26 APR 0503	102	.00	.00	.00	0.	*	26 APR 1233	252	.00	.00	.00	1.
26 APR 0506	103	.00	.00	.00	0.	*	26 APR 1236	253	.00	.00	.00	1.
26 APR 0509	104	.00	.00	.00	0.	*	26 APR 1239	254	.00	.00	.00	1.
26 APR 0512	105	.00	.00	.00	0.	*	26 APR 1242	255	.00	.00	.00	1.
26 APR 0515	106	.00	.00	.00	0.	*	26 APR 1245	256	.00	.00	.00	1.
26 APR 0518	107	.00	.00	.00	0.	*	26 APR 1248	257	.00	.00	.00	1.
26 APR 0521	108	.00	.00	.00	0.	*	26 APR 1251	258	.00	.00	.00	1.
26 APR 0524	109	.00	.00	.00	0.	*	26 APR 1254	259	.00	.00	.00	1.
26 APR 0527	110	.00	.00	.00	0.	*	26 APR 1257	260	.00	.00	.00	1.
26 APR 0530	111	.00	.00	.00	0.	*	26 APR 1300	261	.00	.00	.00	1.
26 APR 0533	112	.00	.00	.00	0.	*	26 APR 1303	262	.00	.00	.00	1.
26 APR 0536	113	.00	.00	.00	0.	*	26 APR 1306	263	.00	.00	.00	1.
26 APR 0539	114	.00	.00	.00	0.	*	26 APR 1309	264	.00	.00	.00	1.
26 APR 0542	115	.00	.00	.00	0.	*	26 APR 1312	265	.00	.00	.00	1.
26 APR 0545	116	.00	.00	.00	0.	*	26 APR 1315	266	.00	.00	.00	1.
26 APR 0548	117	.00	.00	.00	0.	*	26 APR 1318	267	.00	.00	.00	1.
26 APR 0551	118	.01	.01	.00	0.	*	26 APR 1321	268	.00	.00	.00	1.
26 APR 0554	119	.01	.01	.00	0.	*	26 APR 1324	269	.00	.00	.00	1.
26 APR 0557	120	.01	.01	.00	0.	*	26 APR 1327	270	.00	.00	.00	1.
26 APR 0600	121	.01	.01	.00	0.	*	26 APR 1330	271	.00	.00	.00	1.
26 APR 0603	122	.01	.01	.00	0.	*	26 APR 1333	272	.00	.00	.00	1.
26 APR 0606	123	.01	.01	.00	0.	*	26 APR 1336	273	.00	.00	.00	1.
26 APR 0609	124	.01	.01	.00	0.	*	26 APR 1339	274	.00	.00	.00	1.
26 APR 0612	125	.01	.01	.00	0.	*	26 APR 1342	275	.00	.00	.00	1.
26 APR 0615	126	.01	.01	.00	0.	*	26 APR 1345	276	.00	.00	.00	1.
26 APR 0618	127	.01	.01	.00	0.	*	26 APR 1348	277	.00	.00	.00	1.
26 APR 0621	128	.01	.01	.00	0.	*	26 APR 1351	278	.00	.00	.00	1.
26 APR 0624	129	.01	.01	.00	0.	*	26 APR 1354	279	.00	.00	.00	1.
26 APR 0627	130	.01	.01	.00	0.	*	26 APR 1357	280	.00	.00	.00	1.
26 APR 0630	131	.01	.01	.00	0.	*	26 APR 1400	281	.00	.00	.00	1.
26 APR 0633	132	.01	.01	.00	0.	*	26 APR 1403	282	.00	.00	.00	1.
26 APR 0636	133	.01	.01	.00	0.	*	26 APR 1406	283	.00	.00	.00	1.
26 APR 0639	134	.01	.01	.00	0.	*	26 APR 1409	284	.00	.00	.00	1.
26 APR 0642	135	.01	.01	.00	0.	*	26 APR 1412	285	.00	.00	.00	1.
26 APR 0645	136	.01	.01	.00	0.	*	26 APR 1415	286	.00	.00	.00	1.
26 APR 0648	137	.01	.01	.00	0.	*	26 APR 1418	287	.00	.00	.00	1.
26 APR 0651	138	.01	.01	.00	0.	*	26 APR 1421	288	.00	.00	.00	1.
26 APR 0654	139	.01	.01	.00	0.	*	26 APR 1424	289	.00	.00	.00	1.
26 APR 0657	140	.01	.01	.00	0.	*	26 APR 1427	290	.00	.00	.00	1.
26 APR 0700	141	.04	.04	.00	0.	*	26 APR 1430	291	.00	.00	.00	1.
26 APR 0703	142	.04	.04	.00	0.	*	26 APR 1433	292	.00	.00	.00	1.
26 APR 0706	143	.05	.04	.01	1.	*	26 APR 1436	293	.00	.00	.00	1.
26 APR 0709	144	.05	.04	.01	1.	*	26 APR 1439	294	.00	.00	.00	1.
26 APR 0712	145	.06	.05	.01	2.	*	26 APR 1442	295	.00	.00	.00	1.
26 APR 0715	146	.08	.06	.02	3.	*	26 APR 1445	296	.00	.00	.00	1.
26 APR 0718	147	.09	.07	.03	5.	*	26 APR 1448	297	.00	.00	.00	1.
26 APR 0721	148	.11	.07	.04	8.	*	26 APR 1451	298	.00	.00	.00	1.
26 APR 0724	149	.18	.11	.07	12.	*	26 APR 1454	299	.00	.00	.00	1.
26 APR 0727	150	.34	.17	.17	20.	*	26 APR 1457	300	.00	.00	.00	1.
						*						

****

TOTAL RAINFALL = 3.19. TOTAL LOSS = 1.66. TOTAL EXCESS = 1.53

PEAK FLOW (CFS)	TIME (HR)		MAXIMUM AVERAGE FLOW 6-HR	24-HR	72-HR	14.95-HR
94.	7.70	(CFS)	10.	4.	4.	4.
		(INCHES)	1.475	1.526	1.526	1.526
		(AC-FT)	5.	5.	5.	5.

CUMULATIVE AREA = .06 SQ MI

```
** *** *** *** *** *** *** *** *** *** *** *** *** *** *** *** *** *** *** *** *** *** *** *** *** *** *** *** *** *** *** *** ***

          **************
          *            *
140 KK    *     SUB28  *
          *            *
          **************

142 KO          OUTPUT CONTROL VARIABLES
                      IPRNT           1  PRINT CONTROL
                      IPLOT           0  PLOT CONTROL
                      QSCAL          0.  HYDROGRAPH PLOT SCALE

             SUBBASIN RUNOFF DATA

143 BA          SUBBASIN CHARACTERISTICS
                      TAREA         .02  SUBBASIN AREA

                PRECIPITATION DATA

  9 PH                                 DEPTHS FOR   0-PERCENT HYPOTHETICAL STORM
                ..... HYDRO-35 .....   ............... TP-40 ...............   ........... TP-49 ...........
                5-MIN  15-MIN  60-MIN    2-HR    3-HR    6-HR   12-HR   24-HR   2-DAY   4-DAY   7-DAY  10-DAY
                  .65    1.28    2.25    2.44    2.56    2.80    3.10    3.40     .00     .00     .00     .00

                                                  STORM AREA =     .02

 144 LS         SCS LOSS RATE
                      STRTL         .41  INITIAL ABSTRACTION
                     CRVNBR       83.00  CURVE NUMBER
                      RTIMP         .00  PERCENT IMPERVIOUS AREA

 145 UD         SCS DIMENSIONLESS UNITGRAPH
                       TLAG         .14  LAG

                                                        ***
WARNING *** TIME INTERVAL IS GREATER THAN .29*LAG

                                                UNIT HYDROGRAPH
                                          16 END-OF-PERIOD ORDINATES
              12.       40.       59.       54.       38.       22.       13.        8.        5.        3.
               2.        1.        1.        0.        0.        0.

*****************************************************************************************************************

                                          HYDROGRAPH AT STATION    SUB28

*****************************************************************************************************************
                                                                  *
     DA MON HRMN  ORD    RAIN    LOSS  EXCESS    COMP Q          *     DA MON HRMN  ORD    RAIN    LOSS  EXCESS    COMP Q
                                                                  *
     26 APR 0000    1     .00     .00     .00        0.          *     26 APR 0730  151     .39     .15     .24       19.
     26 APR 0003    2     .00     .00     .00        0.          *     26 APR 0733  152     .22     .07     .15       29.
     26 APR 0006    3     .00     .00     .00        0.          *     26 APR 0736  153     .15     .04     .11       36.
     26 APR 0009    4     .00     .00     .00        0.          *     26 APR 0739  154     .10     .03     .07       37.
     26 APR 0012    5     .00     .00     .00        0.          *     26 APR 0742  155     .09     .02     .07       33.
     26 APR 0015    6     .00     .00     .00        0.          *     26 APR 0745  156     .06     .01     .05       28.
     26 APR 0018    7     .00     .00     .00        0.          *     26 APR 0748  157     .05     .01     .04       23.
     26 APR 0021    8     .00     .00     .00        0.          *     26 APR 0751  158     .05     .01     .04       19.
     26 APR 0024    9     .00     .00     .00        0.          *     26 APR 0754  159     .05     .01     .04       16.
     26 APR 0027   10     .00     .00     .00        0.          *     26 APR 0757  160     .04     .01     .03       13.
     26 APR 0030   11     .00     .00     .00        0.          *     26 APR 0800  161     .01     .00     .01       11.
```

26	APR	0033	12	.00	.00	.00	0.	*	26	APR	0803	162	.01	.00	.01	9.
26	APR	0036	13	.00	.00	.00	0.	*	26	APR	0806	163	.01	.00	.01	7.
26	APR	0039	14	.00	.00	.00	0.	*	26	APR	0809	164	.01	.00	.01	5.
26	APR	0042	15	.00	.00	.00	0.	*	26	APR	0812	165	.01	.00	.01	4.
26	APR	0045	16	.00	.00	.00	0.	*	26	APR	0815	166	.01	.00	.01	3.
26	APR	0048	17	.00	.00	.00	0.	*	26	APR	0818	167	.01	.00	.01	3.
26	APR	0051	18	.00	.00	.00	0.	*	26	APR	0821	168	.01	.00	.01	2.
26	APR	0054	19	.00	.00	.00	0.	*	26	APR	0824	169	.01	.00	.01	2.
26	APR	0057	20	.00	.00	.00	0.	*	26	APR	0827	170	.01	.00	.01	2.
26	APR	0100	21	.00	.00	.00	0.	*	26	APR	0830	171	.01	.00	.01	2.
26	APR	0103	22	.00	.00	.00	0.	*	26	APR	0833	172	.01	.00	.01	2.
26	APR	0106	23	.00	.00	.00	0.	*	26	APR	0836	173	.01	.00	.01	2.
26	APR	0109	24	.00	.00	.00	0.	*	26	APR	0839	174	.01	.00	.01	1.
26	APR	0112	25	.00	.00	.00	0.	*	26	APR	0842	175	.01	.00	.00	1.
26	APR	0115	26	.00	.00	.00	0.	*	26	APR	0845	176	.01	.00	.00	1.
26	APR	0118	27	.00	.00	.00	0.	*	26	APR	0848	177	.01	.00	.00	1.
26	APR	0121	28	.00	.00	.00	0.	*	26	APR	0851	178	.01	.00	.00	1.
26	APR	0124	29	.00	.00	.00	0.	*	26	APR	0854	179	.01	.00	.00	1.
26	APR	0127	30	.00	.00	.00	0.	*	26	APR	0857	180	.01	.00	.00	1.
26	APR	0130	31	.00	.00	.00	0.	*	26	APR	0900	181	.01	.00	.00	1.
26	APR	0133	32	.00	.00	.00	0.	*	26	APR	0903	182	.01	.00	.00	1.
26	APR	0136	33	.00	.00	.00	0.	*	26	APR	0906	183	.01	.00	.00	1.
26	APR	0139	34	.00	.00	.00	0.	*	26	APR	0909	184	.01	.00	.00	1.
26	APR	0142	35	.00	.00	.00	0.	*	26	APR	0912	185	.00	.00	.00	1.
26	APR	0145	36	.00	.00	.00	0.	*	26	APR	0915	186	.00	.00	.00	1.
26	APR	0148	37	.00	.00	.00	0.	*	26	APR	0918	187	.00	.00	.00	1.
26	APR	0151	38	.00	.00	.00	0.	*	26	APR	0921	188	.00	.00	.00	1.
26	APR	0154	39	.00	.00	.00	0.	*	26	APR	0924	189	.00	.00	.00	1.
26	APR	0157	40	.00	.00	.00	0.	*	26	APR	0927	190	.00	.00	.00	1.
26	APR	0200	41	.00	.00	.00	0.	*	26	APR	0930	191	.00	.00	.00	1.
26	APR	0203	42	.00	.00	.00	0.	*	26	APR	0933	192	.00	.00	.00	1.
26	APR	0206	43	.00	.00	.00	0.	*	26	APR	0936	193	.00	.00	.00	1.
26	APR	0209	44	.00	.00	.00	0.	*	26	APR	0939	194	.00	.00	.00	1.
26	APR	0212	45	.00	.00	.00	0.	*	26	APR	0942	195	.00	.00	.00	1.
26	APR	0215	46	.00	.00	.00	0.	*	26	APR	0945	196	.00	.00	.00	1.
26	APR	0218	47	.00	.00	.00	0.	*	26	APR	0948	197	.00	.00	.00	1.
26	APR	0221	48	.00	.00	.00	0.	*	26	APR	0951	198	.00	.00	.00	1.
26	APR	0224	49	.00	.00	.00	0.	*	26	APR	0954	199	.00	.00	.00	1.
26	APR	0227	50	.00	.00	.00	0.	*	26	APR	0957	200	.00	.00	.00	1.
26	APR	0230	51	.00	.00	.00	0.	*	26	APR	1000	201	.00	.00	.00	1.
26	APR	0233	52	.00	.00	.00	0.	*	26	APR	1003	202	.00	.00	.00	1.
26	APR	0236	53	.00	.00	.00	0.	*	26	APR	1006	203	.00	.00	.00	1.
26	APR	0239	54	.00	.00	.00	0.	*	26	APR	1009	204	.00	.00	.00	1.
26	APR	0242	55	.00	.00	.00	0.	*	26	APR	1012	205	.00	.00	.00	1.
26	APR	0245	56	.00	.00	.00	0.	*	26	APR	1015	206	.00	.00	.00	1.
26	APR	0248	57	.00	.00	.00	0.	*	26	APR	1018	207	.00	.00	.00	1.
26	APR	0251	58	.00	.00	.00	0.	*	26	APR	1021	208	.00	.00	.00	1.
26	APR	0254	59	.00	.00	.00	0.	*	26	APR	1024	209	.00	.00	.00	1.
26	APR	0257	60	.00	.00	.00	0.	*	26	APR	1027	210	.00	.00	.00	1.
26	APR	0300	61	.00	.00	.00	0.	*	26	APR	1030	211	.00	.00	.00	1.
26	APR	0303	62	.00	.00	.00	0.	*	26	APR	1033	212	.00	.00	.00	1.
26	APR	0306	63	.00	.00	.00	0.	*	26	APR	1036	213	.00	.00	.00	1.
26	APR	0309	64	.00	.00	.00	0.	*	26	APR	1039	214	.00	.00	.00	1.
26	APR	0312	65	.00	.00	.00	0.	*	26	APR	1042	215	.00	.00	.00	1.
26	APR	0315	66	.00	.00	.00	0.	*	26	APR	1045	216	.00	.00	.00	1.
26	APR	0318	67	.00	.00	.00	0.	*	26	APR	1048	217	.00	.00	.00	1.
26	APR	0321	68	.00	.00	.00	0.	*	26	APR	1051	218	.00	.00	.00	1.
26	APR	0324	69	.00	.00	.00	0.	*	26	APR	1054	219	.00	.00	.00	1.
26	APR	0327	70	.00	.00	.00	0.	*	26	APR	1057	220	.00	.00	.00	1.
26	APR	0330	71	.00	.00	.00	0.	*	26	APR	1100	221	.00	.00	.00	1.
26	APR	0333	72	.00	.00	.00	0.	*	26	APR	1103	222	.00	.00	.00	1.
26	APR	0336	73	.00	.00	.00	0.	*	26	APR	1106	223	.00	.00	.00	1.
26	APR	0339	74	.00	.00	.00	0.	*	26	APR	1109	224	.00	.00	.00	1.
26	APR	0342	75	.00	.00	.00	0.	*	26	APR	1112	225	.00	.00	.00	1.
26	APR	0345	76	.00	.00	.00	0.	*	26	APR	1115	226	.00	.00	.00	1.
26	APR	0348	77	.00	.00	.00	0.	*	26	APR	1118	227	.00	.00	.00	1.

26 APR 0351	78	.00	.00	.00	0.	*	26 APR 1121	228	.00	.00	.00	1.
26 APR 0354	79	.00	.00	.00	0.	*	26 APR 1124	229	.00	.00	.00	1.
26 APR 0357	80	.00	.00	.00	0.	*	26 APR 1127	230	.00	.00	.00	1.
26 APR 0400	81	.00	.00	.00	0.	*	26 APR 1130	231	.00	.00	.00	1.
26 APR 0403	82	.00	.00	.00	0.	*	26 APR 1133	232	.00	.00	.00	1.
26 APR 0406	83	.00	.00	.00	0.	*	26 APR 1136	233	.00	.00	.00	1.
26 APR 0409	84	.00	.00	.00	0.	*	26 APR 1139	234	.00	.00	.00	1.
26 APR 0412	85	.00	.00	.00	0.	*	26 APR 1142	235	.00	.00	.00	1.
26 APR 0415	86	.00	.00	.00	0.	*	26 APR 1145	236	.00	.00	.00	1.
26 APR 0418	87	.00	.00	.00	0.	*	26 APR 1148	237	.00	.00	.00	1.
26 APR 0421	88	.00	.00	.00	0.	*	26 APR 1151	238	.00	.00	.00	1.
26 APR 0424	89	.00	.00	.00	0.	*	26 APR 1154	239	.00	.00	.00	1.
26 APR 0427	90	.00	.00	.00	0.	*	26 APR 1157	240	.00	.00	.00	1.
26 APR 0430	91	.00	.00	.00	0.	*	26 APR 1200	241	.00	.00	.00	1.
26 APR 0433	92	.00	.00	.00	0.	*	26 APR 1203	242	.00	.00	.00	1.
26 APR 0436	93	.00	.00	.00	0.	*	26 APR 1206	243	.00	.00	.00	1.
26 APR 0439	94	.00	.00	.00	0.	*	26 APR 1209	244	.00	.00	.00	1.
26 APR 0442	95	.00	.00	.00	0.	*	26 APR 1212	245	.00	.00	.00	1.
26 APR 0445	96	.00	.00	.00	0.	*	26 APR 1215	246	.00	.00	.00	0.
26 APR 0448	97	.00	.00	.00	0.	*	26 APR 1218	247	.00	.00	.00	0.
26 APR 0451	98	.00	.00	.00	0.	*	26 APR 1221	248	.00	.00	.00	0.
26 APR 0454	99	.00	.00	.00	0.	*	26 APR 1224	249	.00	.00	.00	0.
26 APR 0457	100	.00	.00	.00	0.	*	26 APR 1227	250	.00	.00	.00	0.
26 APR 0500	101	.00	.00	.00	0.	*	26 APR 1230	251	.00	.00	.00	0.
26 APR 0503	102	.00	.00	.00	0.	*	26 APR 1233	252	.00	.00	.00	0.
26 APR 0506	103	.00	.00	.00	0.	*	26 APR 1236	253	.00	.00	.00	0.
26 APR 0509	104	.00	.00	.00	0.	*	26 APR 1239	254	.00	.00	.00	0.
26 APR 0512	105	.00	.00	.00	0.	*	26 APR 1242	255	.00	.00	.00	0.
26 APR 0515	106	.00	.00	.00	0.	*	26 APR 1245	256	.00	.00	.00	0.
26 APR 0518	107	.00	.00	.00	0.	*	26 APR 1248	257	.00	.00	.00	0.
26 APR 0521	108	.00	.00	.00	0.	*	26 APR 1251	258	.00	.00	.00	0.
26 APR 0524	109	.00	.00	.00	0.	*	26 APR 1254	259	.00	.00	.00	0.
26 APR 0527	110	.00	.00	.00	0.	*	26 APR 1257	260	.00	.00	.00	0.
26 APR 0530	111	.00	.00	.00	0.	*	26 APR 1300	261	.00	.00	.00	0.
26 APR 0533	112	.00	.00	.00	0.	*	26 APR 1303	262	.00	.00	.00	0.
26 APR 0536	113	.00	.00	.00	0.	*	26 APR 1306	263	.00	.00	.00	0.
26 APR 0539	114	.00	.00	.00	0.	*	26 APR 1309	264	.00	.00	.00	0.
26 APR 0542	115	.00	.00	.00	0.	*	26 APR 1312	265	.00	.00	.00	0.
26 APR 0545	116	.00	.00	.00	0.	*	26 APR 1315	266	.00	.00	.00	0.
26 APR 0548	117	.00	.00	.00	0.	*	26 APR 1318	267	.00	.00	.00	0.
26 APR 0551	118	.01	.01	.00	0.	*	26 APR 1321	268	.00	.00	.00	0.
26 APR 0554	119	.01	.01	.00	0.	*	26 APR 1324	269	.00	.00	.00	0.
26 APR 0557	120	.01	.01	.00	0.	*	26 APR 1327	270	.00	.00	.00	0.
26 APR 0600	121	.01	.01	.00	0.	*	26 APR 1330	271	.00	.00	.00	0.
26 APR 0603	122	.01	.01	.00	0.	*	26 APR 1333	272	.00	.00	.00	0.
26 APR 0606	123	.01	.01	.00	0.	*	26 APR 1336	273	.00	.00	.00	0.
26 APR 0609	124	.01	.01	.00	0.	*	26 APR 1339	274	.00	.00	.00	0.
26 APR 0612	125	.01	.01	.00	0.	*	26 APR 1342	275	.00	.00	.00	0.
26 APR 0615	126	.01	.01	.00	0.	*	26 APR 1345	276	.00	.00	.00	0.
26 APR 0618	127	.01	.01	.00	0.	*	26 APR 1348	277	.00	.00	.00	0.
26 APR 0621	128	.01	.01	.00	0.	*	26 APR 1351	278	.00	.00	.00	0.
26 APR 0624	129	.01	.01	.00	0.	*	26 APR 1354	279	.00	.00	.00	0.
26 APR 0627	130	.01	.01	.00	0.	*	26 APR 1357	280	.00	.00	.00	0.
26 APR 0630	131	.01	.01	.00	0.	*	26 APR 1400	281	.00	.00	.00	0.
26 APR 0633	132	.01	.01	.00	0.	*	26 APR 1403	282	.00	.00	.00	0.
26 APR 0636	133	.01	.01	.00	0.	*	26 APR 1406	283	.00	.00	.00	0.
26 APR 0639	134	.01	.01	.00	0.	*	26 APR 1409	284	.00	.00	.00	0.
26 APR 0642	135	.01	.01	.00	0.	*	26 APR 1412	285	.00	.00	.00	0.
26 APR 0645	136	.01	.01	.00	0.	*	26 APR 1415	286	.00	.00	.00	0.
26 APR 0648	137	.01	.01	.00	0.	*	26 APR 1418	287	.00	.00	.00	0.
26 APR 0651	138	.01	.01	.00	0.	*	26 APR 1421	288	.00	.00	.00	0.
26 APR 0654	139	.01	.01	.00	0.	*	26 APR 1424	289	.00	.00	.00	0.
26 APR 0657	140	.01	.01	.00	0.	*	26 APR 1427	290	.00	.00	.00	0.
26 APR 0700	141	.04	.04	.00	0.	*	26 APR 1430	291	.00	.00	.00	0.
26 APR 0703	142	.04	.04	.00	0.	*	26 APR 1433	292	.00	.00	.00	0.
26 APR 0706	143	.05	.04	.01	1.	*	26 APR 1436	293	.00	.00	.00	0.

26 APR 0709	144	.05	.04	.01	1.	*	26 APR 1439	294	.00	.00	.00	0.
26 APR 0712	145	.06	.04	.01	1.	*	26 APR 1442	295	.00	.00	.00	0.
26 APR 0715	146	.08	.06	.02	2.	*	26 APR 1445	296	.00	.00	.00	0.
26 APR 0718	147	.09	.06	.03	3.	*	26 APR 1448	297	.00	.00	.00	0.
26 APR 0721	148	.11	.07	.04	4.	*	26 APR 1451	298	.00	.00	.00	0.
26 APR 0724	149	.18	.10	.08	6.	*	26 APR 1454	299	.00	.00	.00	0.
26 APR 0727	150	.34	.16	.18	11.	*	26 APR 1457	300	.00	.00	.00	0.
						*						

****

TOTAL RAINFALL = 3.19, TOTAL LOSS = 1.59, TOTAL EXCESS = 1.60

PEAK FLOW (CFS)	TIME (HR)		MAXIMUM AVERAGE FLOW 6-HR	24-HR	72-HR	14.95-HR
37.	7.65	(CFS)	3.	1.	1.	1.
		(INCHES)	1.544	1.598	1.598	1.598
		(AC-FT)	2.	2.	2.	2.

CUMULATIVE AREA = .02 SQ MI

RUNOFF SUMMARY
FLOW IN CUBIC FEET PER SECOND
TIME IN HOURS, AREA IN SQUARE MILES

OPERATION	STATION	PEAK FLOW	TIME OF PEAK	AVERAGE FLOW FOR MAXIMUM PERIOD 6-HOUR	24-HOUR	72-HOUR	BASIN AREA	MAXIMUM STAGE	TIME OF MAX STAGE
HYDROGRAPH AT	SUB4	121.	7.80	15.	6.	6.	.09		
HYDROGRAPH AT	SUB2	13.	7.80	2.	1.	1.	.01		
HYDROGRAPH AT	SUB6	42.	7.75	5.	2.	2.	.03		
HYDROGRAPH AT	SUB8	93.	7.70	10.	4.	4.	.06		
4 COMBINED AT	COMB1	264.	7.75	31.	13.	13.	.19		
HYDROGRAPH AT	SUB10	53.	7.65	5.	2.	2.	.03		
HYDROGRAPH AT	SUB1	66.	7.80	8.	3.	3.	.05		
HYDROGRAPH AT	SUB3	16.	7.70	2.	1.	1.	.01		
4 COMBINED AT	COMB2	383.	7.75	46.	19.	19.	.28		
HYDROGRAPH AT	SUB5	163.	7.85	22.	9.	9.	.13		
HYDROGRAPH AT	SUB12	344.	8.10	65.	27.	27.	.41		
HYDROGRAPH AT	SUB7	182.	7.80	24.	10.	10.	.15		
4 COMBINED AT	COMB3	938.	7.85	156.	65.	65.	.97		
HYDROGRAPH AT	SUB14	83.	7.75	10.	4.	4.	.06		
HYDROGRAPH AT	SUB9	57.	7.60	5.	2.	2.	.03		
3 COMBINED AT	COMB4	1037.	7.80	170.	71.	71.	1.06		
HYDROGRAPH AT	SUB16	296.	8.10	55.	23.	23.	.35		
HYDROGRAPH AT	SUB11	93.	7.70	10.	4.	4.	.06		
HYDROGRAPH AT	SUB15	45.	7.55	3.	1.	1.	.02		
4 COMBINED AT	COMB5	1331.	7.85	238.	99.	99.	1.49		
ROUTED TO	DDD	220.	7.60	220.	98.	98.	1.49	1393.24	8.90
HYDROGRAPH AT	SUB22	398.	7.75	44.	18.	18.	.28		
2 COMBINED AT	COMB6	618.	7.75	262.	117.	117.	1.77		
HYDROGRAPH AT	SUB13	166.	7.75	19.	8.	8.	.12		
HYDROGRAPH AT	SUB18	58.	7.60	5.	2.	2.	.03		
HYDROGRAPH AT	SUB20	52.	7.80	6.	3.	3.	.04		
3 COMBINED AT	COMB1A	254.	7.75	30.	13.	13.	.19		
HYDROGRAPH AT	SUB26	94.	7.70	10.	4.	4.	.06		
HYDROGRAPH AT	SUB28	37.	7.65	3.	1.	1.	.02		

```
LINE          ID.......1.......2.......3.......4.......5.......6.......7.......8.......9.......10

  1           ID        SQUAW PEAK HIGHWAY _ STATE HWY 510
  2           ID        DISCHARGE DETERMINATION 100 YEARSTORM
  3           ID        SQUAW PEAK, PHOENIX, MARICOPA COUNTY,AZ.
  4           ID        JUNE 29, 1988 DREAMY DRAW MODELED AS RESERVOIR
  5           IT       3 26APR88       0      300
  6           IO       5

  7           KK    SUB4
  8           KM        RUNOFF FROM SUBAREA 4
  9           PH       0       0    0.73    1.44    2.52    2.76    2.91    3.20    3.50    3.80
 10           BA     .09
 11           LS       0      83
 12           UD   0.273

 13           KK    SUB2
 14           KM        RUNOFF FROM SUBAREA 2
 15           BA     .01
 16           LS       0      82
 17           UD   0.274

 18           KK    SUB6
 19           KM        RUNOFF FROM SUBAREA 6
 20           BA     .03
 21           LS       0      83
 22           UD   0.257

 23           KK    SUB8
 24           KM        RUNOFF FROM SUBAREA 8
 25           BA     .06
 26           LS       0      83
 27           UD    .208

 28           KK   COMB1
 29           KM        COMBINE HYDROGRAPHS FROM SUBBASINS 4,2,6    +8=A
 30           HC       4

 31           KK   SUB10
 32           KM        RUNOFF FROM SUBBASIN 10
 33           BA     .03
 34           LS       0      82
 35           UD    .133

 36           KK    SUB1
 37           KM        RUNOFF FROM SUBAREA 1
 38           BA     .05
 39           LS       0      83
 40           UD    .281

 41           KK    SUB3
 42           KM        RUNOFF FROM SUBAREA 3
 43           BA     .01
 44           LS       0      83
 45           UD    .200
```

APPENDIX II

DREAMY DRAW WATERSHED
HEC-1
100-YEAR STORM

```
LINE          ID.......1.......2.......3.......4.......5.......6.......7.......8.......9......10

  46          KK   COMB2
  47          KM        COMBINE A1+10+1+      3=B
  48          HC      4

  49          KK    SUB5
  50          KM        RUNOFF FROM SUBAREA 5
  51          BA     .13
  52          LS       0       83
  53          UD    .309

  54          KK   SUB12
  55          KM        RUNOFF FROM SUBAREA 12
  56          BA     .41
  57          LS       0       82
  58          UD   0.547

  59          KK    SUB7
  60          KM        RUNOFF FROM SUBAREA 7
  61          BA     .15
  62          LS       0       82
  63          UD    .299

  64          KK   COMB3
  65          KM        COMBINE B+5+12+7=C
  66          HC      4

  67          KK   SUB14
  68          KM        RUNOFF FROM SUBAREA 14
  69          BA     .06
  70          LS       0       82
  71          UD    .236

  72          KK    SUB9
  73          KM        RUNOFF FROM SUBAREA 9
  74          BA     .03
  75          LS       0       82
  76          UD    .113

  77          KK   COMB4
  78          KM        COMBINE C+14+9=D
  79          HC      3

  80          KK   SUB16
  81          KM        RUNOFF FROM SUBAREA 16
  82          BA     .35
  83          LS       0       82
  84          UD    .541

  85          KK   SUB11
  86          KM        RUNOFF FROM SUBAREA 11
  87          BA     .06
  88          LS       0       82
  89          UD    .189
```

```
LINE          ID.......1.......2.......3.......4.......5.......6.......7.......8.......9......10

  90          KK   SUB15
  91          KM        RUNOFF FROM SUBAREA 15
  92          BA     .02
  93          LS       0      82
  94          UD   0.064

  95          KK   COMB5
  96          KM        COMBINE ROUTED HYDROGRAPHS D+16+11+15=E JUST U/S OF DDD
  97          HC       4

  98          KK     DDDDREAMY DRAW DAM
  99          KM        MODELED AS RESERVOIR USING COE INFORMATION
 100          KO       1
 101          RS       1    FLOW      -1
 102          SV       0       5      35      88     168     281
 103          SE    1381    1385    1390    1395    1400    1405
 104          SQ       0     220     220     220     220     220
 105          SE    1381    1385    1390    1395    1400    1405

 106          KK   SUB22
 107          KM        RUNOFF FROM SUBAREA 22
 108          BA     .28
 109          LS       0      82
 110          UD    .221

 111          KK   COMB6
 112          KM        COMBINE E+22 @ O UTLET A
 113          KO       1
 114          HC       2

 115          KK   SUB13
 116          KM        RUNOFF FROM SUBAREA 13
 117          BA     .12
 118          LS       0      82
 119          UD    .235

 120          KK   SUB18
 121          KM        RUNOFF FROM SUBAREA 18
 122          BA     .03
 123          LS       0      82
 124          UD    .109

 125          KK   SUB20
 126          KM        RUNOFF FROM SUBAREA 20
 127          BA     .04
 128          LS       0      82
 129          UD    .263

 130          KK  COMB1A
 131          KM        COMBINE 13+18+20 @ OUTLET B
 132          KO       1
 133          HC       3
```

```
LINE          ID.......1.......2.......3.......4.......5.......6.......7.......8.......9.......10

 134          KK   SUB26
 135          KM        RUNOFF FROM SUBAREA 26 @ OUTLET C
 136          KO       1
 137          BA     .06
 138          LS       0      82
 139          UD    .183

 140          KK   SUB28
 141          KM        RUNOFF FROM SUBAREA 28 @ OUTLET D
 142          KO       1
 143          BA     .02
 144          LS       0      83
 145          UD    .138
 146          ZZ
```

```
                                                  ****
                    FLOOD HYDROGRAPH PACKAGE HEC-1 (IBM XT 512K VERSION) -FEB 1,1985
         U.S. ARMY CORPS OF ENGINEERS, THE HYDROLOGIC ENGINEERING CENTER, 609 SECOND STREET, DAVIS, CA. 95616
                                                  ****


                        SQUAW PEAK HIGHWAY _ STATE HWY 510
                        DISCHARGE DETERMINATION 100 YEARSTORM
                        SQUAW PEAK, PHOENIX, MARICOPA COUNTY,AZ.
                        JUNE 29, 1988 DREAMY DRAW MODELED AS RESERVOIR

  6 IO          OUTPUT CONTROL VARIABLES
                      IPRNT           5  PRINT CONTROL
                      IPLOT           0  PLOT CONTROL
                      QSCAL          0.  HYDROGRAPH PLOT SCALE

    IT          HYDROGRAPH TIME DATA
                       NMIN           3  MINUTES IN COMPUTATION INTERVAL
                      IDATE     26APR88  STARTING DATE
                      ITIME        0000  STARTING TIME
                         NQ         300  NUMBER OF HYDROGRAPH ORDINATES
                     NDDATE     26APR88  ENDING DATE
                     NDTIME        1457  ENDING TIME

                COMPUTATION INTERVAL     .05 HOURS
                     TOTAL TIME BASE   14.95 HOURS

        ENGLISH UNITS

 RNING *** TIME INTERVAL IS GREATER THAN .29*LAG

WARNING *** TIME INTERVAL IS GREATER THAN .29*LAG

 RNING *** TIME INTERVAL IS GREATER THAN .29*LAG


*** *** *** *** *** *** *** *** *** *** *** *** *** *** *** *** *** *** *** *** *** *** *** *** *** *** *** *** *** *** *** ***


          **************
          *            *
  98 KK   *       DDD  *     DREAMY DRAW DAM
          *            *
          **************

 100 KO          OUTPUT CONTROL VARIABLES
                      IPRNT           1  PRINT CONTROL
                      IPLOT           0  PLOT CONTROL
                      QSCAL          0.  HYDROGRAPH PLOT SCALE

             HYDROGRAPH ROUTING DATA

 101 RS          STORAGE ROUTING
                      NSTPS           1  NUMBER OF SUBREACHES
                       ITYP        FLOW  TYPE OF INITIAL CONDITION
                     RSVRIC       -1.00  INITIAL CONDITION
                          X         .00 WORKING R AND D COEFFICIENT

 102 SV            STORAGE          .0       5.0      35.0      88.0     168.0     281.0

 103 SE          ELEVATION     1381.00   1385.00   1390.00   1395.00   1400.00   1405.00
```

ISCHARGE	0.	220.	220.	220.	220.	220.
LEVATION	1381.00	1385.00	1390.00	1395.00	1400.00	1405.00

***

COMPUTED STORAGE-OUTFLOW-ELEVATION DATA

RAGE	.00	5.00	35.00	88.00	168.00	281.00
FLOW	.00	220.00	220.00	220.00	220.00	220.00
ON	1381.00	1385.00	1390.00	1395.00	1400.00	1405.00

****

HYDROGRAPH AT STATION DDD

****

R	OUTFLOW	STORAGE	STAGE	*	DA	MON	HRMN	ORD	OUTFLOW	STORAGE	STAGE	*	DA	MON	HRMN	ORD	OUTFLOW	STORAGE	STAGE
1	0.	.0	1381.0	*	26	APR	0500	101	0.	.0	1381.0	*	26	APR	1000	201	220.	83.6	1394.6
	0.	.0	1381.0	*	26	APR	0503	102	0.	.0	1381.0	*	26	APR	1003	202	220.	83.1	1394.5
	0.	.0	1381.0	*	26	APR	0506	103	0.	.0	1381.0	*	26	APR	1006	203	220.	82.5	1394.5
	0.	.0	1381.0	*	26	APR	0509	104	0.	.0	1381.0	*	26	APR	1009	204	220.	81.9	1394.4
5	0.	.0	1381.0	*	26	APR	0512	105	0.	.0	1381.0	*	26	APR	1012	205	220.	81.4	1394.4
6	0.	.0	1381.0	*	26	APR	0515	106	0.	.0	1381.0	*	26	APR	1015	206	220.	80.8	1394.3
	0.	.0	1381.0	*	26	APR	0518	107	0.	.0	1381.0	*	26	APR	1018	207	220.	80.2	1394.3
	0.	.0	1381.0	*	26	APR	0521	108	0.	.0	1381.0	*	26	APR	1021	208	220.	79.6	1394.2
	0.	.0	1381.0	*	26	APR	0524	109	0.	.0	1381.0	*	26	APR	1024	209	220.	79.0	1394.1
10	0.	.0	1381.0	*	26	APR	0527	110	0.	.0	1381.0	*	26	APR	1027	210	220.	78.4	1394.1
11	0.	.0	1381.0	*	26	APR	0530	111	0.	.0	1381.0	*	26	APR	1030	211	220.	77.7	1394.0
1	0.	.0	1381.0	*	26	APR	0533	112	0.	.0	1381.0	*	26	APR	1033	212	220.	77.1	1394.0
1	0.	.0	1381.0	*	26	APR	0536	113	0.	.0	1381.0	*	26	APR	1036	213	220.	76.5	1393.9
1	0.	.0	1381.0	*	26	APR	0539	114	0.	.0	1381.0	*	26	APR	1039	214	220.	75.8	1393.9
1	0.	.0	1381.0	*	26	APR	0542	115	0.	.0	1381.0	*	26	APR	1042	215	220.	75.2	1393.8
16	0.	.0	1381.0	*	26	APR	0545	116	0.	.0	1381.0	*	26	APR	1045	216	220.	74.5	1393.7
17	0.	.0	1381.0	*	26	APR	0548	117	0.	.0	1381.0	*	26	APR	1048	217	220.	73.9	1393.7
1	0.	.0	1381.0	*	26	APR	0551	118	0.	.0	1381.0	*	26	APR	1051	218	220.	73.2	1393.6
1	0.	.0	1381.0	*	26	APR	0554	119	0.	.0	1381.0	*	26	APR	1054	219	220.	72.6	1393.5
2	0.	.0	1381.0	*	26	APR	0557	120	0.	.0	1381.0	*	26	APR	1057	220	220.	71.9	1393.5
21	0.	.0	1381.0	*	26	APR	0600	121	0.	.0	1381.0	*	26	APR	1100	221	220.	71.2	1393.4
22	0.	.0	1381.0	*	26	APR	0603	122	0.	.0	1381.0	*	26	APR	1103	222	220.	70.5	1393.4
2	0.	.0	1381.0	*	26	APR	0606	123	0.	.0	1381.0	*	26	APR	1106	223	220.	69.9	1393.3
2	0.	.0	1381.0	*	26	APR	0609	124	0.	.0	1381.0	*	26	APR	1109	224	220.	69.2	1393.2
2	0.	.0	1381.0	*	26	APR	0612	125	0.	.0	1381.0	*	26	APR	1112	225	220.	68.5	1393.2
26	0.	.0	1381.0	*	26	APR	0615	126	0.	.0	1381.0	*	26	APR	1115	226	220.	67.8	1393.1
27	0.	.0	1381.0	*	26	APR	0618	127	0.	.0	1381.0	*	26	APR	1118	227	220.	67.1	1393.0
2	0.	.0	1381.0	*	26	APR	0621	128	0.	.0	1381.0	*	26	APR	1121	228	220.	66.4	1393.0
	0.	.0	1381.0	*	26	APR	0624	129	0.	.0	1381.0	*	26	APR	1124	229	220.	65.7	1392.9
	0.	.0	1381.0	*	26	APR	0627	130	0.	.0	1381.0	*	26	APR	1127	230	220.	65.0	1392.8
32	0.	.0	1381.0	*	26	APR	0630	131	0.	.0	1381.0	*	26	APR	1130	231	220.	64.3	1392.8
32	0.	.0	1381.0	*	26	APR	0633	132	0.	.0	1381.0	*	26	APR	1133	232	220.	63.6	1392.7
	0.	.0	1381.0	*	26	APR	0636	133	0.	.0	1381.0	*	26	APR	1136	233	220.	62.9	1392.6
	0.	.0	1381.0	*	26	APR	0639	134	0.	.0	1381.0	*	26	APR	1139	234	220.	62.1	1392.6
	0.	.0	1381.0	*	26	APR	0642	135	0.	.0	1381.0	*	26	APR	1142	235	220.	61.4	1392.5
	0.	.0	1381.0	*	26	APR	0645	136	0.	.0	1381.0	*	26	APR	1145	236	220.	60.7	1392.4
37	0.	.0	1381.0	*	26	APR	0648	137	0.	.0	1381.0	*	26	APR	1148	237	220.	60.0	1392.4
	0.	.0	1381.0	*	26	APR	0651	138	0.	.0	1381.0	*	26	APR	1151	238	220.	59.3	1392.3
	0.	.0	1381.0	*	26	APR	0654	139	1.	.0	1381.0	*	26	APR	1154	239	220.	58.5	1392.2
	0.	.0	1381.0	*	26	APR	0657	140	1.	.0	1381.0	*	26	APR	1157	240	220.	57.8	1392.2
	0.	.0	1381.0	*	26	APR	0700	141	2.	.0	1381.0	*	26	APR	1200	241	220.	57.1	1392.1
42	0.	.0	1381.0	*	26	APR	0703	142	3.	.1	1381.1	*	26	APR	1203	242	220.	56.3	1392.0
43	0.	.0	1381.0	*	26	APR	0706	143	5.	.1	1381.1	*	26	APR	1206	243	220.	55.6	1391.9
	0.	.0	1381.0	*	26	APR	0709	144	8.	.2	1381.1	*	26	APR	1209	244	220.	54.9	1391.9
	0.	.0	1381.0	*	26	APR	0712	145	12.	.3	1381.2	*	26	APR	1212	245	220.	54.1	1391.8

26	APR	0215	46	0.	.0	1381.0	*	26	APR	0715	146	19.	.4	1381.3	*	26	APR	1215	246	220.	53.4	139
26	APR	0218	47	0.	.0	1381.0	*	26	APR	0718	147	28.	.6	1381.5	*	26	APR	1218	247	220.	52.7	139
26	APR	0221	48	0.	.0	1381.0	*	26	APR	0721	148	42.	1.0	1381.8	*	26	APR	1221	248	220.	51.9	139
26	APR	0224	49	0.	.0	1381.0	*	26	APR	0724	149	62.	1.4	1382.1	*	26	APR	1224	249	220.	51.2	139
26	APR	0227	50	0.	.0	1381.0	*	26	APR	0727	150	93.	2.1	1382.7	*	26	APR	1227	250	220.	50.4	139
26	APR	0230	51	0.	.0	1381.0	*	26	APR	0730	151	145.	3.3	1383.6	*	26	APR	1230	251	220.	49.7	139
26	APR	0233	52	0.	.0	1381.0	*	26	APR	0733	152	220.	5.1	1385.0	*	26	APR	1233	252	220.	48.9	139
26	APR	0236	53	0.	.0	1381.0	*	26	APR	0736	153	220.	7.8	1385.5	*	26	APR	1236	253	220.	48.2	139
26	APR	0239	54	0.	.0	1381.0	*	26	APR	0739	154	220.	11.6	1386.1	*	26	APR	1239	254	220.	47.4	139
26	APR	0242	55	0.	.0	1381.0	*	26	APR	0742	155	220.	16.2	1386.9	*	26	APR	1242	255	220.	46.7	139
26	APR	0245	56	0.	.0	1381.0	*	26	APR	0745	156	220.	21.4	1387.7	*	26	APR	1245	256	220.	45.9	139
26	APR	0248	57	0.	.0	1381.0	*	26	APR	0748	157	220.	27.0	1388.7	*	26	APR	1248	257	220.	45.1	139
26	APR	0251	58	0.	.0	1381.0	*	26	APR	0751	158	220.	32.7	1389.6	*	26	APR	1251	258	220.	44.4	139
26	APR	0254	59	0.	.0	1381.0	*	26	APR	0754	159	220.	38.5	1390.3	*	26	APR	1254	259	220.	43.6	139
26	APR	0257	60	0.	.0	1381.0	*	26	APR	0757	160	220.	44.1	1390.9	*	26	APR	1257	260	220.	42.9	139
26	APR	0300	61	0.	.0	1381.0	*	26	APR	0800	161	220.	49.4	1391.4	*	26	APR	1300	261	220.	42.1	139
26	APR	0303	62	0.	.0	1381.0	*	26	APR	0803	162	220.	54.5	1391.8	*	26	APR	1303	262	220.	41.3	139
26	APR	0306	63	0.	.0	1381.0	*	26	APR	0806	163	220.	59.3	1392.3	*	26	APR	1306	263	220.	40.6	139
26	APR	0309	64	0.	.0	1381.0	*	26	APR	0809	164	220.	63.7	1392.7	*	26	APR	1309	264	220.	39.8	139
26	APR	0312	65	0.	.0	1381.0	*	26	APR	0812	165	220.	67.7	1393.1	*	26	APR	1312	265	220.	39.0	139
26	APR	0315	66	0.	.0	1381.0	*	26	APR	0815	166	220.	71.3	1393.4	*	26	APR	1315	266	220.	38.3	139
26	APR	0318	67	0.	.0	1381.0	*	26	APR	0818	167	220.	74.6	1393.7	*	26	APR	1318	267	220.	37.5	139
26	APR	0321	68	0.	.0	1381.0	*	26	APR	0821	168	220.	77.4	1394.0	*	26	APR	1321	268	220.	36.7	139
26	APR	0324	69	0.	.0	1381.0	*	26	APR	0824	169	220.	79.8	1394.2	*	26	APR	1324	269	220.	36.0	139
26	APR	0327	70	0.	.0	1381.0	*	26	APR	0827	170	220.	81.9	1394.4	*	26	APR	1327	270	220.	35.2	139
26	APR	0330	71	0.	.0	1381.0	*	26	APR	0830	171	220.	83.6	1394.6	*	26	APR	1330	271	220.	34.4	138
26	APR	0333	72	0.	.0	1381.0	*	26	APR	0833	172	220.	85.1	1394.7	*	26	APR	1333	272	220.	33.6	138
26	APR	0336	73	0.	.0	1381.0	*	26	APR	0836	173	220.	86.4	1394.8	*	26	APR	1336	273	220.	32.9	138
26	APR	0339	74	0.	.0	1381.0	*	26	APR	0839	174	220.	87.4	1394.9	*	26	APR	1339	274	220.	32.1	138
26	APR	0342	75	0.	.0	1381.0	*	26	APR	0842	175	220.	88.2	1395.0	*	26	APR	1342	275	220.	31.3	138
26	APR	0345	76	0.	.0	1381.0	*	26	APR	0845	176	220.	88.9	1395.1	*	26	APR	1345	276	220.	30.5	138
26	APR	0348	77	0.	.0	1381.0	*	26	APR	0848	177	220.	89.4	1395.1	*	26	APR	1348	277	220.	29.7	138
26	APR	0351	78	0.	.0	1381.0	*	26	APR	0851	178	220.	89.8	1395.1	*	26	APR	1351	278	220.	29.0	138
26	APR	0354	79	0.	.0	1381.0	*	26	APR	0854	179	220.	90.1	1395.1	*	26	APR	1354	279	220.	28.2	138
26	APR	0357	80	0.	.0	1381.0	*	26	APR	0857	180	220.	90.3	1395.1	*	26	APR	1357	280	220.	27.4	138
26	APR	0400	81	0.	.0	1381.0	*	26	APR	0900	181	220.	90.4	1395.2	*	26	APR	1400	281	220.	26.6	138
26	APR	0403	82	0.	.0	1381.0	*	26	APR	0903	182	220.	90.4	1395.2	*	26	APR	1403	282	220.	25.8	138
26	APR	0406	83	0.	.0	1381.0	*	26	APR	0906	183	220.	90.4	1395.1	*	26	APR	1406	283	220.	25.0	138
26	APR	0409	84	0.	.0	1381.0	*	26	APR	0909	184	220.	90.3	1395.1	*	26	APR	1409	284	220.	24.2	138
26	APR	0412	85	0.	.0	1381.0	*	26	APR	0912	185	220.	90.1	1395.1	*	26	APR	1412	285	220.	23.4	138
26	APR	0415	86	0.	.0	1381.0	*	26	APR	0915	186	220.	89.9	1395.1	*	26	APR	1415	286	220.	22.6	137
26	APR	0418	87	0.	.0	1381.0	*	26	APR	0918	187	220.	89.7	1395.1	*	26	APR	1418	287	220.	21.8	137
26	APR	0421	88	0.	.0	1381.0	*	26	APR	0921	188	220.	89.4	1395.1	*	26	APR	1421	288	220.	21.0	137
26	APR	0424	89	0.	.0	1381.0	*	26	APR	0924	189	220.	89.1	1395.1	*	26	APR	1424	289	220.	20.2	137
26	APR	0427	90	0.	.0	1381.0	*	26	APR	0927	190	220.	88.7	1395.0	*	26	APR	1427	290	220.	19.4	137
26	APR	0430	91	0.	.0	1381.0	*	26	APR	0930	191	220.	88.4	1395.0	*	26	APR	1430	291	220.	18.6	137
26	APR	0433	92	0.	.0	1381.0	*	26	APR	0933	192	220.	88.0	1395.0	*	26	APR	1433	292	220.	17.8	137
26	APR	0436	93	0.	.0	1381.0	*	26	APR	0936	193	220.	87.5	1395.0	*	26	APR	1436	293	220.	17.0	137
26	APR	0439	94	0.	.0	1381.0	*	26	APR	0939	194	220.	87.1	1394.9	*	26	APR	1439	294	220.	16.2	136
26	APR	0442	95	0.	.0	1381.0	*	26	APR	0942	195	220.	86.6	1394.9	*	26	APR	1442	295	220.	15.4	136
26	APR	0445	96	0.	.0	1381.0	*	26	APR	0945	196	220.	86.2	1394.8	*	26	APR	1445	296	220.	14.6	136
26	APR	0448	97	0.	.0	1381.0	*	26	APR	0948	197	220.	85.7	1394.8	*	26	APR	1448	297	220.	13.8	136
26	APR	0451	98	0.	.0	1381.0	*	26	APR	0951	198	220.	85.2	1394.7	*	26	APR	1451	298	220.	13.0	136
26	APR	0454	99	0.	.0	1381.0	*	26	APR	0954	199	220.	84.7	1394.7	*	26	APR	1454	299	220.	12.2	136
26	APR	0457	100	0.	.0	1381.0	*	26	APR	0957	200	220.	84.2	1394.6	*	26	APR	1457	300	220.	11.4	136
							*								*								

****

EAK FLOW (CFS)	TIME (HR)		6-HR	MAXIMUM AVERAGE FLOW 24-HR	72-HR	14.95-HR
220.	7.55	(CFS)	220.	111.	111.	111.
		(INCHES)	1.373	1.721	1.721	1.721
		(AC-FT)	109.	137.	137.	137.

AK STORAGE (AC-FT)	TIME (HR)	6-HR	MAXIMUM AVERAGE STORAGE 24-HR	72-HR	14.95-HR

90.	9.05	66.	28.	28.	28.

PEAK STAGE (FEET)	TIME (HR)	MAXIMUM AVERAGE STAGE 6-HR	24-HR	72-HR	14.95-HR
1395.15	9.05	1392.88	1386.40	1386.40	1386.40

CUMULATIVE AREA = 1.49 SQ MI

** ***

```
              **************
              *            *
111 KK        *    COMB6   *
              *            *
              **************
```

113 KO OUTPUT CONTROL VARIABLES

IPRNT	1	PRINT CONTROL
IPLOT	0	PLOT CONTROL
QSCAL	0.	HYDROGRAPH PLOT SCALE

114 HC HYDROGRAPH COMBINATION

ICOMP	2	NUMBER OF HYDROGRAPHS TO COMBINE

***

****

HYDROGRAPH AT STATION COMB6
SUM OF 2 HYDROGRAPHS

****

DA	MON	HRMN	ORD	FLOW	DA	MON	HRMN	ORD	FLOW	DA	MON	HRMN	ORD	FLOW	DA	MON	HRMN	ORD	FLOW
26	APR	0000	1	0.	26	APR	0345	76	0.	26	APR	0730	151	302.	26	APR	1115	226	229.
26	APR	0003	2	0.	26	APR	0348	77	0.	26	APR	0733	152	469.	26	APR	1118	227	229.
26	APR	0006	3	0.	26	APR	0351	78	0.	26	APR	0736	153	574.	26	APR	1121	228	229.
26	APR	0009	4	0.	26	APR	0354	79	0.	26	APR	0739	154	658.	26	APR	1124	229	229.
26	APR	0012	5	0.	26	APR	0357	80	0.	26	APR	0742	155	702.	26	APR	1127	230	229.
26	APR	0015	6	0.	26	APR	0400	81	0.	26	APR	0745	156	703.	26	APR	1130	231	228.
26	APR	0018	7	0.	26	APR	0403	82	0.	26	APR	0748	157	670.	26	APR	1133	232	228.
26	APR	0021	8	0.	26	APR	0406	83	0.	26	APR	0751	158	619.	26	APR	1136	233	228.
26	APR	0024	9	0.	26	APR	0409	84	0.	26	APR	0754	159	566.	26	APR	1139	234	228.
26	APR	0027	10	0.	26	APR	0412	85	0.	26	APR	0757	160	519.	26	APR	1142	235	228.
26	APR	0030	11	0.	26	APR	0415	86	0.	26	APR	0800	161	478.	26	APR	1145	236	228.
26	APR	0033	12	0.	26	APR	0418	87	0.	26	APR	0803	162	442.	26	APR	1148	237	228.
26	APR	0036	13	0.	26	APR	0421	88	0.	26	APR	0806	163	408.	26	APR	1151	238	228.
26	APR	0039	14	0.	26	APR	0424	89	0.	26	APR	0809	164	376.	26	APR	1154	239	228.
26	APR	0042	15	0.	26	APR	0427	90	0.	26	APR	0812	165	348.	26	APR	1157	240	228.
26	APR	0045	16	0.	26	APR	0430	91	0.	26	APR	0815	166	324.	26	APR	1200	241	228.
26	APR	0048	17	0.	26	APR	0433	92	0.	26	APR	0818	167	305.	26	APR	1203	242	228.
26	APR	0051	18	0.	26	APR	0436	93	0.	26	APR	0821	168	291.	26	APR	1206	243	227.
26	APR	0054	19	0.	26	APR	0439	94	0.	26	APR	0824	169	280.	26	APR	1209	244	227.
26	APR	0057	20	0.	26	APR	0442	95	0.	26	APR	0827	170	272.	26	APR	1212	245	227.
26	APR	0100	21	0.	26	APR	0445	96	0.	26	APR	0830	171	266.	26	APR	1215	246	227.
26	APR	0103	22	0.	26	APR	0448	97	0.	26	APR	0833	172	261.	26	APR	1218	247	227.
26	APR	0106	23	0.	26	APR	0451	98	0.	26	APR	0836	173	257.	26	APR	1221	248	227.
26	APR	0109	24	0.	26	APR	0454	99	0.	26	APR	0839	174	253.	26	APR	1224	249	227.
26	APR	0112	25	0.	26	APR	0457	100	0.	26	APR	0842	175	251.	26	APR	1227	250	227.
26	APR	0115	26	0.	26	APR	0500	101	0.	26	APR	0845	176	249.	26	APR	1230	251	227.
26	APR	0118	27	0.	26	APR	0503	102	0.	26	APR	0848	177	247.	26	APR	1233	252	227.

26 APR 0121	28	0.	*	26 APR 0506	103	0.	*	26 APR 0851	178	245.	*	26 APR 1236	253	227
26 APR 0124	29	0.	*	26 APR 0509	104	0.	*	26 APR 0854	179	244.	*	26 APR 1239	254	227
26 APR 0127	30	0.	*	26 APR 0512	105	0.	*	26 APR 0857	180	243.	*	26 APR 1242	255	227
26 APR 0130	31	0.	*	26 APR 0515	106	0.	*	26 APR 0900	181	242.	*	26 APR 1245	256	227
26 APR 0133	32	0.	*	26 APR 0518	107	0.	*	26 APR 0903	182	241.	*	26 APR 1248	257	227
26 APR 0136	33	0.	*	26 APR 0521	108	0.	*	26 APR 0906	183	241.	*	26 APR 1251	258	227
26 APR 0139	34	0.	*	26 APR 0524	109	0.	*	26 APR 0909	184	240.	*	26 APR 1254	259	226
26 APR 0142	35	0.	*	26 APR 0527	110	0.	*	26 APR 0912	185	240.	*	26 APR 1257	260	226
26 APR 0145	36	0.	*	26 APR 0530	111	0.	*	26 APR 0915	186	239.	*	26 APR 1300	261	226
26 APR 0148	37	0.	*	26 APR 0533	112	0.	*	26 APR 0918	187	239.	*	26 APR 1303	262	226
26 APR 0151	38	0.	*	26 APR 0536	113	0.	*	26 APR 0921	188	238.	*	26 APR 1306	263	226
26 APR 0154	39	0.	*	26 APR 0539	114	0.	*	26 APR 0924	189	238.	*	26 APR 1309	264	226
26 APR 0157	40	0.	*	26 APR 0542	115	0.	*	26 APR 0927	190	238.	*	26 APR 1312	265	226
26 APR 0200	41	0.	*	26 APR 0545	116	0.	*	26 APR 0930	191	237.	*	26 APR 1315	266	226
26 APR 0203	42	0.	*	26 APR 0548	117	0.	*	26 APR 0933	192	237.	*	26 APR 1318	267	226
26 APR 0206	43	0.	*	26 APR 0551	118	0.	*	26 APR 0936	193	236.	*	26 APR 1321	268	226
26 APR 0209	44	0.	*	26 APR 0554	119	0.	*	26 APR 0939	194	236.	*	26 APR 1324	269	226
26 APR 0212	45	0.	*	26 APR 0557	120	0.	*	26 APR 0942	195	236.	*	26 APR 1327	270	226
26 APR 0215	46	0.	*	26 APR 0600	121	0.	*	26 APR 0945	196	235.	*	26 APR 1330	271	226
26 APR 0218	47	0.	*	26 APR 0603	122	0.	*	26 APR 0948	197	235.	*	26 APR 1333	272	226
26 APR 0221	48	0.	*	26 APR 0606	123	0.	*	26 APR 0951	198	235.	*	26 APR 1336	273	226
26 APR 0224	49	0.	*	26 APR 0609	124	0.	*	26 APR 0954	199	234.	*	26 APR 1339	274	226
26 APR 0227	50	0.	*	26 APR 0612	125	0.	*	26 APR 0957	200	234.	*	26 APR 1342	275	225
26 APR 0230	51	0.	*	26 APR 0615	126	0.	*	26 APR 1000	201	234.	*	26 APR 1345	276	225
26 APR 0233	52	0.	*	26 APR 0618	127	0.	*	26 APR 1003	202	234.	*	26 APR 1348	277	225
26 APR 0236	53	0.	*	26 APR 0621	128	0.	*	26 APR 1006	203	233.	*	26 APR 1351	278	225
26 APR 0239	54	0.	*	26 APR 0624	129	0.	*	26 APR 1009	204	233.	*	26 APR 1354	279	225
26 APR 0242	55	0.	*	26 APR 0627	130	0.	*	26 APR 1012	205	233.	*	26 APR 1357	280	225.
26 APR 0245	56	0.	*	26 APR 0630	131	0.	*	26 APR 1015	206	233.	*	26 APR 1400	281	225.
26 APR 0248	57	0.	*	26 APR 0633	132	0.	*	26 APR 1018	207	232.	*	26 APR 1403	282	225.
26 APR 0251	58	0.	*	26 APR 0636	133	0.	*	26 APR 1021	208	232.	*	26 APR 1406	283	225
26 APR 0254	59	0.	*	26 APR 0639	134	0.	*	26 APR 1024	209	232.	*	26 APR 1409	284	225
26 APR 0257	60	0.	*	26 APR 0642	135	0.	*	26 APR 1027	210	232.	*	26 APR 1412	285	225
26 APR 0300	61	0.	*	26 APR 0645	136	0.	*	26 APR 1030	211	232.	*	26 APR 1415	286	225
26 APR 0303	62	0.	*	26 APR 0648	137	0.	*	26 APR 1033	212	231.	*	26 APR 1418	287	225
26 APR 0306	63	0.	*	26 APR 0651	138	1.	*	26 APR 1036	213	231.	*	26 APR 1421	288	225
26 APR 0309	64	0.	*	26 APR 0654	139	1.	*	26 APR 1039	214	231.	*	26 APR 1424	289	225
26 APR 0312	65	0.	*	26 APR 0657	140	2.	*	26 APR 1042	215	231.	*	26 APR 1427	290	225
26 APR 0315	66	0.	*	26 APR 0700	141	4.	*	26 APR 1045	216	231.	*	26 APR 1430	291	225
26 APR 0318	67	0.	*	26 APR 0703	142	6.	*	26 APR 1048	217	230.	*	26 APR 1433	292	225
26 APR 0321	68	0.	*	26 APR 0706	143	10.	*	26 APR 1051	218	230.	*	26 APR 1436	293	225
26 APR 0324	69	0.	*	26 APR 0709	144	16.	*	26 APR 1054	219	230.	*	26 APR 1439	294	225
26 APR 0327	70	0.	*	26 APR 0712	145	26.	*	26 APR 1057	220	230.	*	26 APR 1442	295	225
26 APR 0330	71	0.	*	26 APR 0715	146	39.	*	26 APR 1100	221	230.	*	26 APR 1445	296	225
26 APR 0333	72	0.	*	26 APR 0718	147	58.	*	26 APR 1103	222	229.	*	26 APR 1448	297	225
26 APR 0336	73	0.	*	26 APR 0721	148	85.	*	26 APR 1106	223	229.	*	26 APR 1451	298	224
26 APR 0339	74	0.	*	26 APR 0724	149	124.	*	26 APR 1109	224	229.	*	26 APR 1454	299	224
26 APR 0342	75	0.	*	26 APR 0727	150	190.	*	26 APR 1112	225	229.	*	26 APR 1457	300	224
			*				*				*			

****

PEAK FLOW	TIME		MAXIMUM AVERAGE FLOW			
(CFS)	(HR)		6-HR	24-HR	72-HR	14.95-HR
703.	7.75	(CFS)	271.	133.	133.	133.
		(INCHES)	1.425	1.741	1.741	1.741
		(AC-FT)	135.	164.	164.	164.

CUMULATIVE AREA = 1.77 SQ MI

ARNING *** TIME INTERVAL IS GREATER THAN .29*LAG

** ***

```
                 **************
                 *            *
 130 KK          *   COMB1A   *
                 *            *
                 **************

 32 KO                OUTPUT CONTROL VARIABLES
                            IPRNT           1  PRINT CONTROL
                            IPLOT           0  PLOT CONTROL
                            QSCAL          0.  HYDROGRAPH PLOT SCALE

 33 HC                HYDROGRAPH COMBINATION
                            ICOMP           3  NUMBER OF HYDROGRAPHS TO COMBINE

                                                                  ***
```

HYDROGRAPH AT STATION COMB1A
SUM OF 3 HYDROGRAPHS

DA	MON	HRMN	ORD	FLOW	DA	MON	HRMN	ORD	FLOW	DA	MON	HRMN	ORD	FLOW	DA	MON	HRMN	ORD	FLOW
26	APR	0000	1	0.	26	APR	0345	76	0.	26	APR	0730	151	122.	26	APR	1115	226	6.
26	APR	0003	2	0.	26	APR	0348	77	0.	26	APR	0733	152	187.	26	APR	1118	227	6.
26	APR	0006	3	0.	26	APR	0351	78	0.	26	APR	0736	153	248.	26	APR	1121	228	6.
26	APR	0009	4	0.	26	APR	0354	79	0.	26	APR	0739	154	290.	26	APR	1124	229	6.
26	APR	0012	5	0.	26	APR	0357	80	0.	26	APR	0742	155	309.	26	APR	1127	230	6.
26	APR	0015	6	0.	26	APR	0400	81	0.	26	APR	0745	156	308.	26	APR	1130	231	6.
26	APR	0018	7	0.	26	APR	0403	82	0.	26	APR	0748	157	290.	26	APR	1133	232	6.
26	APR	0021	8	0.	26	APR	0406	83	0.	26	APR	0751	158	262.	26	APR	1136	233	6.
26	APR	0024	9	0.	26	APR	0409	84	0.	26	APR	0754	159	230.	26	APR	1139	234	6.
26	APR	0027	10	0.	26	APR	0412	85	0.	26	APR	0757	160	201.	26	APR	1142	235	5.
26	APR	0030	11	0.	26	APR	0415	86	0.	26	APR	0800	161	175.	26	APR	1145	236	5.
26	APR	0033	12	0.	26	APR	0418	87	0.	26	APR	0803	162	150.	26	APR	1148	237	5.
26	APR	0036	13	0.	26	APR	0421	88	0.	26	APR	0806	163	127.	26	APR	1151	238	5.
26	APR	0039	14	0.	26	APR	0424	89	0.	26	APR	0809	164	106.	26	APR	1154	239	5.
26	APR	0042	15	0.	26	APR	0427	90	0.	26	APR	0812	165	88.	26	APR	1157	240	5.
26	APR	0045	16	0.	26	APR	0430	91	0.	26	APR	0815	166	73.	26	APR	1200	241	5.
26	APR	0048	17	0.	26	APR	0433	92	0.	26	APR	0818	167	60.	26	APR	1203	242	5.
26	APR	0051	18	0.	26	APR	0436	93	0.	26	APR	0821	168	50.	26	APR	1206	243	5.
26	APR	0054	19	0.	26	APR	0439	94	0.	26	APR	0824	169	43.	26	APR	1209	244	5.
26	APR	0057	20	0.	26	APR	0442	95	0.	26	APR	0827	170	37.	26	APR	1212	245	5.
26	APR	0100	21	0.	26	APR	0445	96	0.	26	APR	0830	171	33.	26	APR	1215	246	5.
26	APR	0103	22	0.	26	APR	0448	97	0.	26	APR	0833	172	29.	26	APR	1218	247	5.
26	APR	0106	23	0.	26	APR	0451	98	0.	26	APR	0836	173	26.	26	APR	1221	248	5.
26	APR	0109	24	0.	26	APR	0454	99	0.	26	APR	0839	174	24.	26	APR	1224	249	5.
26	APR	0112	25	0.	26	APR	0457	100	0.	26	APR	0842	175	22.	26	APR	1227	250	5.
26	APR	0115	26	0.	26	APR	0500	101	0.	26	APR	0845	176	20.	26	APR	1230	251	5.
26	APR	0118	27	0.	26	APR	0503	102	0.	26	APR	0848	177	19.	26	APR	1233	252	5.
26	APR	0121	28	0.	26	APR	0506	103	0.	26	APR	0851	178	18.	26	APR	1236	253	5.
26	APR	0124	29	0.	26	APR	0509	104	0.	26	APR	0854	179	17.	26	APR	1239	254	5.
26	APR	0127	30	0.	26	APR	0512	105	0.	26	APR	0857	180	16.	26	APR	1242	255	5.
26	APR	0130	31	0.	26	APR	0515	106	0.	26	APR	0900	181	15.	26	APR	1245	256	4.
26	APR	0133	32	0.	26	APR	0518	107	0.	26	APR	0903	182	15.	26	APR	1248	257	4.
26	APR	0136	33	0.	26	APR	0521	108	0.	26	APR	0906	183	14.	26	APR	1251	258	4.
26	APR	0139	34	0.	26	APR	0524	109	0.	26	APR	0909	184	14.	26	APR	1254	259	4.
26	APR	0142	35	0.	26	APR	0527	110	0.	26	APR	0912	185	13.	26	APR	1257	260	4.
26	APR	0145	36	0.	26	APR	0530	111	0.	26	APR	0915	186	13.	26	APR	1300	261	4.
26	APR	0148	37	0.	26	APR	0533	112	0.	26	APR	0918	187	13.	26	APR	1303	262	4.
26	APR	0151	38	0.	26	APR	0536	113	0.	26	APR	0921	188	13.	26	APR	1306	263	4.
26	APR	0154	39	0.	26	APR	0539	114	0.	26	APR	0924	189	12.	26	APR	1309	264	4.
26	APR	0157	40	0.	26	APR	0542	115	0.	26	APR	0927	190	12.	26	APR	1312	265	4.

26 APR 0200	41	0.	*	26 APR 0545	116	0.	*	26 APR 0930	191	12.	*	26 APR 1315	266	4
26 APR 0203	42	0.	*	26 APR 0548	117	0.	*	26 APR 0933	192	11.	*	26 APR 1318	267	4
26 APR 0206	43	0.	*	26 APR 0551	118	0.	*	26 APR 0936	193	11.	*	26 APR 1321	268	4
26 APR 0209	44	0.	*	26 APR 0554	119	0.	*	26 APR 0939	194	11.	*	26 APR 1324	269	4
26 APR 0212	45	0.	*	26 APR 0557	120	0.	*	26 APR 0942	195	11.	*	26 APR 1327	270	4
26 APR 0215	46	0.	*	26 APR 0600	121	0.	*	26 APR 0945	196	10.	*	26 APR 1330	271	4
26 APR 0218	47	0.	*	26 APR 0603	122	0.	*	26 APR 0948	197	10.	*	26 APR 1333	272	4
26 APR 0221	48	0.	*	26 APR 0606	123	0.	*	26 APR 0951	198	10.	*	26 APR 1336	273	4
26 APR 0224	49	0.	*	26 APR 0609	124	0.	*	26 APR 0954	199	10.	*	26 APR 1339	274	4
26 APR 0227	50	0.	*	26 APR 0612	125	0.	*	26 APR 0957	200	10.	*	26 APR 1342	275	4
26 APR 0230	51	0.	*	26 APR 0615	126	0.	*	26 APR 1000	201	9.	*	26 APR 1345	276	4
26 APR 0233	52	0.	*	26 APR 0618	127	0.	*	26 APR 1003	202	9.	*	26 APR 1348	277	4
26 APR 0236	53	0.	*	26 APR 0621	128	0.	*	26 APR 1006	203	9.	*	26 APR 1351	278	4
26 APR 0239	54	0.	*	26 APR 0624	129	0.	*	26 APR 1009	204	9.	*	26 APR 1354	279	3
26 APR 0242	55	0.	*	26 APR 0627	130	0.	*	26 APR 1012	205	9.	*	26 APR 1357	280	3
26 APR 0245	56	0.	*	26 APR 0630	131	0.	*	26 APR 1015	206	9.	*	26 APR 1400	281	3
26 APR 0248	57	0.	*	26 APR 0633	132	0.	*	26 APR 1018	207	8.	*	26 APR 1403	282	3
26 APR 0251	58	0.	*	26 APR 0636	133	0.	*	26 APR 1021	208	8.	*	26 APR 1406	283	3
26 APR 0254	59	0.	*	26 APR 0639	134	0.	*	26 APR 1024	209	8.	*	26 APR 1409	284	3
26 APR 0257	60	0.	*	26 APR 0642	135	0.	*	26 APR 1027	210	8.	*	26 APR 1412	285	3
26 APR 0300	61	0.	*	26 APR 0645	136	0.	*	26 APR 1030	211	8.	*	26 APR 1415	286	3
26 APR 0303	62	0.	*	26 APR 0648	137	0.	*	26 APR 1033	212	8.	*	26 APR 1418	287	3
26 APR 0306	63	0.	*	26 APR 0651	138	0.	*	26 APR 1036	213	8.	*	26 APR 1421	288	3
26 APR 0309	64	0.	*	26 APR 0654	139	0.	*	26 APR 1039	214	7.	*	26 APR 1424	289	3
26 APR 0312	65	0.	*	26 APR 0657	140	1.	*	26 APR 1042	215	7.	*	26 APR 1427	290	3
26 APR 0315	66	0.	*	26 APR 0700	141	1.	*	26 APR 1045	216	7.	*	26 APR 1430	291	3
26 APR 0318	67	0.	*	26 APR 0703	142	2.	*	26 APR 1048	217	7.	*	26 APR 1433	292	3
26 APR 0321	68	0.	*	26 APR 0706	143	4.	*	26 APR 1051	218	7.	*	26 APR 1436	293	3
26 APR 0324	69	0.	*	26 APR 0709	144	6.	*	26 APR 1054	219	7.	*	26 APR 1439	294	3
26 APR 0327	70	0.	*	26 APR 0712	145	10.	*	26 APR 1057	220	7.	*	26 APR 1442	295	3
26 APR 0330	71	0.	*	26 APR 0715	146	15.	*	26 APR 1100	221	7.	*	26 APR 1445	296	3
26 APR 0333	72	0.	*	26 APR 0718	147	21.	*	26 APR 1103	222	6.	*	26 APR 1448	297	3
26 APR 0336	73	0.	*	26 APR 0721	148	31.	*	26 APR 1106	223	6.	*	26 APR 1451	298	3
26 APR 0339	74	0.	*	26 APR 0724	149	45.	*	26 APR 1109	224	6.	*	26 APR 1454	299	3
26 APR 0342	75	0.	*	26 APR 0727	150	73.	*	26 APR 1112	225	6.	*	26 APR 1457	300	3
			*				*				*			

****

PEAK FLOW (CFS)	TIME (HR)		MAXIMUM AVERAGE FLOW 6-HR	24-HR	72-HR	14.95-HR
309.	7.70	(CFS)	37.	15.	15.	15.
		(INCHES)	1.796	1.852	1.852	1.852
		(AC-FT)	18.	19.	19.	19.

CUMULATIVE AREA = .19 SQ MI

** ***

```
          **************
          *            *
134 KK    *     SUB26  *
          *            *
          **************

136 KO          OUTPUT CONTROL VARIABLES
                      IPRNT          1  PRINT CONTROL
                      IPLOT          0  PLOT CONTROL
                      QSCAL         0.  HYDROGRAPH PLOT SCALE

             SUBBASIN RUNOFF DATA

137 BA          SUBBASIN CHARACTERISTICS
```

TAREA .06 SUBBASIN AREA

PRECIPITATION DATA

9 PH DEPTHS FOR 0-PERCENT HYPOTHETICAL STORM

..... HYDRO-35			..... TP-40					..... TP-49			
5-MIN	15-MIN	60-MIN	2-HR	3-HR	6-HR	12-HR	24-HR	2-DAY	4-DAY	7-DAY	10-DAY
.73	1.44	2.52	2.76	2.91	3.20	3.50	3.80	.00	.00	.00	.00

STORM AREA = .06

38 LS SCS LOSS RATE

STRTL .44 INITIAL ABSTRACTION
CRVNBR 82.00 CURVE NUMBER
RTIMP .00 PERCENT IMPERVIOUS AREA

39 UD SCS DIMENSIONLESS UNITGRAPH

TLAG .18 LAG

***

UNIT HYDROGRAPH
20 END-OF-PERIOD ORDINATES

19.	61.	118.	139.	130.	103.	67.	44.	31.	20.
14.	9.	6.	4.	3.	2.	1.	1.	1.	0.

****

HYDROGRAPH AT STATION SUB26

****

DA	MON	HRMN	ORD	RAIN	LOSS	EXCESS	COMP Q	*	DA	MON	HRMN	ORD	RAIN	LOSS	EXCESS	COMP Q
								*								
26	APR	0000	1	.00	.00	.00	0.	*	26	APR	0730	151	.44	.16	.28	45.
26	APR	0003	2	.00	.00	.00	0.	*	26	APR	0733	152	.25	.07	.18	71.
26	APR	0006	3	.00	.00	.00	0.	*	26	APR	0736	153	.17	.05	.12	97.
26	APR	0009	4	.00	.00	.00	0.	*	26	APR	0739	154	.11	.03	.08	112.
26	APR	0012	5	.00	.00	.00	0.	*	26	APR	0742	155	.10	.02	.07	114.
26	APR	0015	6	.00	.00	.00	0.	*	26	APR	0745	156	.07	.02	.05	105.
26	APR	0018	7	.00	.00	.00	0.	*	26	APR	0748	157	.06	.01	.05	91.
26	APR	0021	8	.00	.00	.00	0.	*	26	APR	0751	158	.06	.01	.04	78.
26	APR	0024	9	.00	.00	.00	0.	*	26	APR	0754	159	.05	.01	.04	66.
26	APR	0027	10	.00	.00	.00	0.	*	26	APR	0757	160	.05	.01	.04	56.
26	APR	0030	11	.00	.00	.00	0.	*	26	APR	0800	161	.02	.00	.01	48.
26	APR	0033	12	.00	.00	.00	0.	*	26	APR	0803	162	.01	.00	.01	40.
26	APR	0036	13	.00	.00	.00	0.	*	26	APR	0806	163	.01	.00	.01	33.
26	APR	0039	14	.00	.00	.00	0.	*	26	APR	0809	164	.01	.00	.01	27.
26	APR	0042	15	.00	.00	.00	0.	*	26	APR	0812	165	.01	.00	.01	21.
26	APR	0045	16	.00	.00	.00	0.	*	26	APR	0815	166	.01	.00	.01	17.
26	APR	0048	17	.00	.00	.00	0.	*	26	APR	0818	167	.01	.00	.01	14.
26	APR	0051	18	.00	.00	.00	0.	*	26	APR	0821	168	.01	.00	.01	12.
26	APR	0054	19	.00	.00	.00	0.	*	26	APR	0824	169	.01	.00	.01	10.
26	APR	0057	20	.00	.00	.00	0.	*	26	APR	0827	170	.01	.00	.01	9.
26	APR	0100	21	.00	.00	.00	0.	*	26	APR	0830	171	.01	.00	.01	8.
26	APR	0103	22	.00	.00	.00	0.	*	26	APR	0833	172	.01	.00	.01	7.
26	APR	0106	23	.00	.00	.00	0.	*	26	APR	0836	173	.01	.00	.01	7.
26	APR	0109	24	.00	.00	.00	0.	*	26	APR	0839	174	.01	.00	.01	6.
26	APR	0112	25	.00	.00	.00	0.	*	26	APR	0842	175	.01	.00	.01	6.
26	APR	0115	26	.00	.00	.00	0.	*	26	APR	0845	176	.01	.00	.01	6.
26	APR	0118	27	.00	.00	.00	0.	*	26	APR	0848	177	.01	.00	.01	5.
26	APR	0121	28	.00	.00	.00	0.	*	26	APR	0851	178	.01	.00	.01	5.
26	APR	0124	29	.00	.00	.00	0.	*	26	APR	0854	179	.01	.00	.01	5.
26	APR	0127	30	.00	.00	.00	0.	*	26	APR	0857	180	.01	.00	.01	5.
26	APR	0130	31	.00	.00	.00	0.	*	26	APR	0900	181	.01	.00	.01	5.
26	APR	0133	32	.00	.00	.00	0.	*	26	APR	0903	182	.01	.00	.01	4.

26 APR 0136	33	.00	.00	.00	0.	*	26 APR 0906	183	.01	.00	.01	4.
26 APR 0139	34	.00	.00	.00	0.	*	26 APR 0909	184	.01	.00	.00	4.
26 APR 0142	35	.00	.00	.00	0.	*	26 APR 0912	185	.01	.00	.00	4.
26 APR 0145	36	.00	.00	.00	0.	*	26 APR 0915	186	.01	.00	.00	4.
26 APR 0148	37	.00	.00	.00	0.	*	26 APR 0918	187	.01	.00	.00	4.
26 APR 0151	38	.00	.00	.00	0.	*	26 APR 0921	188	.01	.00	.00	4.
26 APR 0154	39	.00	.00	.00	0.	*	26 APR 0924	189	.01	.00	.00	4.
26 APR 0157	40	.00	.00	.00	0.	*	26 APR 0927	190	.01	.00	.00	4.
26 APR 0200	41	.00	.00	.00	0.	*	26 APR 0930	191	.01	.00	.00	4.
26 APR 0203	42	.00	.00	.00	0.	*	26 APR 0933	192	.01	.00	.00	4.
26 APR 0206	43	.00	.00	.00	0.	*	26 APR 0936	193	.00	.00	.00	3.
26 APR 0209	44	.00	.00	.00	0.	*	26 APR 0939	194	.00	.00	.00	3.
26 APR 0212	45	.00	.00	.00	0.	*	26 APR 0942	195	.00	.00	.00	3.
26 APR 0215	46	.00	.00	.00	0.	*	26 APR 0945	196	.00	.00	.00	3.
26 APR 0218	47	.00	.00	.00	0.	*	26 APR 0948	197	.00	.00	.00	3.
26 APR 0221	48	.00	.00	.00	0.	*	26 APR 0951	198	.00	.00	.00	3.
26 APR 0224	49	.00	.00	.00	0.	*	26 APR 0954	199	.00	.00	.00	3.
26 APR 0227	50	.00	.00	.00	0.	*	26 APR 0957	200	.00	.00	.00	3.
26 APR 0230	51	.00	.00	.00	0.	*	26 APR 1000	201	.00	.00	.00	3.
26 APR 0233	52	.00	.00	.00	0.	*	26 APR 1003	202	.00	.00	.00	3.
26 APR 0236	53	.00	.00	.00	0.	*	26 APR 1006	203	.00	.00	.00	3.
26 APR 0239	54	.00	.00	.00	0.	*	26 APR 1009	204	.00	.00	.00	3.
26 APR 0242	55	.00	.00	.00	0.	*	26 APR 1012	205	.00	.00	.00	3.
26 APR 0245	56	.00	.00	.00	0.	*	26 APR 1015	206	.00	.00	.00	3.
26 APR 0248	57	.00	.00	.00	0.	*	26 APR 1018	207	.00	.00	.00	3.
26 APR 0251	58	.00	.00	.00	0.	*	26 APR 1021	208	.00	.00	.00	3.
26 APR 0254	59	.00	.00	.00	0.	*	26 APR 1024	209	.00	.00	.00	3.
26 APR 0257	60	.00	.00	.00	0.	*	26 APR 1027	210	.00	.00	.00	3.
26 APR 0300	61	.00	.00	.00	0.	*	26 APR 1030	211	.00	.00	.00	2.
26 APR 0303	62	.00	.00	.00	0.	*	26 APR 1033	212	.00	.00	.00	2.
26 APR 0306	63	.00	.00	.00	0.	*	26 APR 1036	213	.00	.00	.00	2.
26 APR 0309	64	.00	.00	.00	0.	*	26 APR 1039	214	.00	.00	.00	2.
26 APR 0312	65	.00	.00	.00	0.	*	26 APR 1042	215	.00	.00	.00	2.
26 APR 0315	66	.00	.00	.00	0.	*	26 APR 1045	216	.00	.00	.00	2.
26 APR 0318	67	.00	.00	.00	0.	*	26 APR 1048	217	.00	.00	.00	2.
26 APR 0321	68	.00	.00	.00	0.	*	26 APR 1051	218	.00	.00	.00	2.
26 APR 0324	69	.00	.00	.00	0.	*	26 APR 1054	219	.00	.00	.00	2.
26 APR 0327	70	.00	.00	.00	0.	*	26 APR 1057	220	.00	.00	.00	2.
26 APR 0330	71	.00	.00	.00	0.	*	26 APR 1100	221	.00	.00	.00	2.
26 APR 0333	72	.00	.00	.00	0.	*	26 APR 1103	222	.00	.00	.00	2.
26 APR 0336	73	.00	.00	.00	0.	*	26 APR 1106	223	.00	.00	.00	2.
26 APR 0339	74	.00	.00	.00	0.	*	26 APR 1109	224	.00	.00	.00	2.
26 APR 0342	75	.00	.00	.00	0.	*	26 APR 1112	225	.00	.00	.00	2.
26 APR 0345	76	.00	.00	.00	0.	*	26 APR 1115	226	.00	.00	.00	2.
26 APR 0348	77	.00	.00	.00	0.	*	26 APR 1118	227	.00	.00	.00	2.
26 APR 0351	78	.00	.00	.00	0.	*	26 APR 1121	228	.00	.00	.00	2.
26 APR 0354	79	.00	.00	.00	0.	*	26 APR 1124	229	.00	.00	.00	2.
26 APR 0357	80	.00	.00	.00	0.	*	26 APR 1127	230	.00	.00	.00	2.
26 APR 0400	81	.00	.00	.00	0.	*	26 APR 1130	231	.00	.00	.00	2.
26 APR 0403	82	.00	.00	.00	0.	*	26 APR 1133	232	.00	.00	.00	2.
26 APR 0406	83	.00	.00	.00	0.	*	26 APR 1136	233	.00	.00	.00	2.
26 APR 0409	84	.00	.00	.00	0.	*	26 APR 1139	234	.00	.00	.00	2.
26 APR 0412	85	.00	.00	.00	0.	*	26 APR 1142	235	.00	.00	.00	2.
26 APR 0415	86	.00	.00	.00	0.	*	26 APR 1145	236	.00	.00	.00	2.
26 APR 0418	87	.00	.00	.00	0.	*	26 APR 1148	237	.00	.00	.00	2.
26 APR 0421	88	.00	.00	.00	0.	*	26 APR 1151	238	.00	.00	.00	2.
26 APR 0424	89	.00	.00	.00	0.	*	26 APR 1154	239	.00	.00	.00	2.
26 APR 0427	90	.00	.00	.00	0.	*	26 APR 1157	240	.00	.00	.00	2.
26 APR 0430	91	.00	.00	.00	0.	*	26 APR 1200	241	.00	.00	.00	2.
26 APR 0433	92	.00	.00	.00	0.	*	26 APR 1203	242	.00	.00	.00	2.
26 APR 0436	93	.00	.00	.00	0.	*	26 APR 1206	243	.00	.00	.00	2.
26 APR 0439	94	.00	.00	.00	0.	*	26 APR 1209	244	.00	.00	.00	2.
26 APR 0442	95	.00	.00	.00	0.	*	26 APR 1212	245	.00	.00	.00	2.
26 APR 0445	96	.00	.00	.00	0.	*	26 APR 1215	246	.00	.00	.00	2.
26 APR 0448	97	.00	.00	.00	0.	*	26 APR 1218	247	.00	.00	.00	2.
26 APR 0451	98	.00	.00	.00	0.	*	26 APR 1221	248	.00	.00	.00	2.

26 APR 0454	99	.00	.00	.00	0.	*	26 APR 1224	249	.00	.00	.00	1.
26 APR 0457	100	.00	.00	.00	0.	*	26 APR 1227	250	.00	.00	.00	1.
26 APR 0500	101	.00	.00	.00	0.	*	26 APR 1230	251	.00	.00	.00	1.
26 APR 0503	102	.00	.00	.00	0.	*	26 APR 1233	252	.00	.00	.00	1.
26 APR 0506	103	.00	.00	.00	0.	*	26 APR 1236	253	.00	.00	.00	1.
26 APR 0509	104	.00	.00	.00	0.	*	26 APR 1239	254	.00	.00	.00	1.
26 APR 0512	105	.00	.00	.00	0.	*	26 APR 1242	255	.00	.00	.00	1.
26 APR 0515	106	.00	.00	.00	0.	*	26 APR 1245	256	.00	.00	.00	1.
26 APR 0518	107	.00	.00	.00	0.	*	26 APR 1248	257	.00	.00	.00	1.
26 APR 0521	108	.00	.00	.00	0.	*	26 APR 1251	258	.00	.00	.00	1.
26 APR 0524	109	.00	.00	.00	0.	*	26 APR 1254	259	.00	.00	.00	1.
26 APR 0527	110	.01	.01	.00	0.	*	26 APR 1257	260	.00	.00	.00	1.
26 APR 0530	111	.01	.01	.00	0.	*	26 APR 1300	261	.00	.00	.00	1.
26 APR 0533	112	.01	.01	.00	0.	*	26 APR 1303	262	.00	.00	.00	1.
26 APR 0536	113	.01	.01	.00	0.	*	26 APR 1306	263	.00	.00	.00	1.
26 APR 0539	114	.01	.01	.00	0.	*	26 APR 1309	264	.00	.00	.00	1.
26 APR 0542	115	.01	.01	.00	0.	*	26 APR 1312	265	.00	.00	.00	1.
26 APR 0545	116	.01	.01	.00	0.	*	26 APR 1315	266	.00	.00	.00	1.
26 APR 0548	117	.01	.01	.00	0.	*	26 APR 1318	267	.00	.00	.00	1.
26 APR 0551	118	.01	.01	.00	0.	*	26 APR 1321	268	.00	.00	.00	1.
26 APR 0554	119	.01	.01	.00	0.	*	26 APR 1324	269	.00	.00	.00	1.
26 APR 0557	120	.01	.01	.00	0.	*	26 APR 1327	270	.00	.00	.00	1.
26 APR 0600	121	.01	.01	.00	0.	*	26 APR 1330	271	.00	.00	.00	1.
26 APR 0603	122	.01	.01	.00	0.	*	26 APR 1333	272	.00	.00	.00	1.
26 APR 0606	123	.01	.01	.00	0.	*	26 APR 1336	273	.00	.00	.00	1.
26 APR 0609	124	.01	.01	.00	0.	*	26 APR 1339	274	.00	.00	.00	1.
26 APR 0612	125	.01	.01	.00	0.	*	26 APR 1342	275	.00	.00	.00	1.
26 APR 0615	126	.01	.01	.00	0.	*	26 APR 1345	276	.00	.00	.00	1.
26 APR 0618	127	.01	.01	.00	0.	*	26 APR 1348	277	.00	.00	.00	1.
26 APR 0621	128	.01	.01	.00	0.	*	26 APR 1351	278	.00	.00	.00	1.
26 APR 0624	129	.01	.01	.00	0.	*	26 APR 1354	279	.00	.00	.00	1.
26 APR 0627	130	.01	.01	.00	0.	*	26 APR 1357	280	.00	.00	.00	1.
26 APR 0630	131	.01	.01	.00	0.	*	26 APR 1400	281	.00	.00	.00	1.
26 APR 0633	132	.01	.01	.00	0.	*	26 APR 1403	282	.00	.00	.00	1.
26 APR 0636	133	.01	.01	.00	0.	*	26 APR 1406	283	.00	.00	.00	1.
26 APR 0639	134	.01	.01	.00	0.	*	26 APR 1409	284	.00	.00	.00	1.
26 APR 0642	135	.01	.01	.00	0.	*	26 APR 1412	285	.00	.00	.00	1.
26 APR 0645	136	.01	.01	.00	0.	*	26 APR 1415	286	.00	.00	.00	1.
26 APR 0648	137	.01	.01	.00	0.	*	26 APR 1418	287	.00	.00	.00	1.
26 APR 0651	138	.01	.01	.00	0.	*	26 APR 1421	288	.00	.00	.00	1.
26 APR 0654	139	.01	.01	.00	0.	*	26 APR 1424	289	.00	.00	.00	1.
26 APR 0657	140	.02	.01	.00	0.	*	26 APR 1427	290	.00	.00	.00	1.
26 APR 0700	141	.05	.04	.00	0.	*	26 APR 1430	291	.00	.00	.00	1.
26 APR 0703	142	.05	.04	.01	1.	*	26 APR 1433	292	.00	.00	.00	1.
26 APR 0706	143	.05	.04	.01	1.	*	26 APR 1436	293	.00	.00	.00	1.
26 APR 0709	144	.06	.05	.01	2.	*	26 APR 1439	294	.00	.00	.00	1.
26 APR 0712	145	.06	.05	.02	4.	*	26 APR 1442	295	.00	.00	.00	1.
26 APR 0715	146	.09	.07	.03	6.	*	26 APR 1445	296	.00	.00	.00	1.
26 APR 0718	147	.10	.07	.04	8.	*	26 APR 1448	297	.00	.00	.00	1.
26 APR 0721	148	.12	.08	.05	12.	*	26 APR 1451	298	.00	.00	.00	1.
26 APR 0724	149	.20	.11	.09	17.	*	26 APR 1454	299	.00	.00	.00	1.
26 APR 0727	150	.38	.17	.21	27.	*	26 APR 1457	300	.00	.00	.00	1.
						*						

****

TOTAL RAINFALL = 3.59, TOTAL LOSS = 1.73, TOTAL EXCESS = 1.86

PEAK FLOW (CFS)	TIME (HR)		MAXIMUM AVERAGE FLOW 6-HR	24-HR	72-HR	14.95-HR
114.	7.70	(CFS)	12.	5.	5.	5.
		(INCHES)	1.797	1.853	1.853	1.853
		(AC-FT)	6.	6.	6.	6.

CUMULATIVE AREA = .06 SQ MI

```
* *** *** *** *** *** *** *** *** *** *** *** *** *** *** *** *** *** *** *** *** *** *** *** *** *** *** *** *** *** *** *** *** ***

          **************
          *            *
 40 KK    *     SUB28  *
          *            *
          **************

 42 KO          OUTPUT CONTROL VARIABLES
                      IPRNT           1  PRINT CONTROL
                      IPLOT           0  PLOT CONTROL
                      QSCAL          0.  HYDROGRAPH PLOT SCALE

              SUBBASIN RUNOFF DATA

 43 BA          SUBBASIN CHARACTERISTICS
                      TAREA         .02  SUBBASIN AREA

                PRECIPITATION DATA

  9 PH                                  DEPTHS FOR   0-PERCENT HYPOTHETICAL STORM
                ..... HYDRO-35 ......   ............... TP-40 ...............   ........... TP-49 ...........
                5-MIN  15-MIN  60-MIN    2-HR    3-HR    6-HR   12-HR   24-HR   2-DAY   4-DAY   7-DAY  10-DAY
                  .73    1.44    2.52    2.76    2.91    3.20    3.50    3.80     .00     .00     .00     .00

                                                   STORM AREA =      .02

 144 LS         SCS LOSS RATE
                      STRTL         .41  INITIAL ABSTRACTION
                     CRVNBR       83.00  CURVE NUMBER
                      RTIMP         .00  PERCENT IMPERVIOUS AREA

 145 UD         SCS DIMENSIONLESS UNITGRAPH
                       TLAG         .14  LAG

                                                          ***
WARNING *** TIME INTERVAL IS GREATER THAN .29*LAG

                                                   UNIT HYDROGRAPH
                                              16 END-OF-PERIOD ORDINATES
              12.       40.       59.       54.       38.       22.       13.        8.        5.        3.
               2.        1.        1.        0.        0.        0.

*****************************************************************************************************************************
                                                HYDROGRAPH AT STATION    SUB28
*****************************************************************************************************************************
                                                                  *
    DA MON HRMN  ORD    RAIN    LOSS  EXCESS    COMP Q          *     DA MON HRMN  ORD    RAIN    LOSS  EXCESS    COMP Q
                                                                  *
    26 APR 0000    1     .00     .00     .00        0.           *     26 APR 0730  151     .44     .15     .29       23.
    26 APR 0003    2     .00     .00     .00        0.           *     26 APR 0733  152     .25     .07     .18       36.
    26 APR 0006    3     .00     .00     .00        0.           *     26 APR 0736  153     .17     .04     .13       44.
    26 APR 0009    4     .00     .00     .00        0.           *     26 APR 0739  154     .11     .03     .09       44.
    26 APR 0012    5     .00     .00     .00        0.           *     26 APR 0742  155     .10     .02     .08       40.
    26 APR 0015    6     .00     .00     .00        0.           *     26 APR 0745  156     .07     .01     .05       33.
    26 APR 0018    7     .00     .00     .00        0.           *     26 APR 0748  157     .06     .01     .05       27.
    26 APR 0021    8     .00     .00     .00        0.           *     26 APR 0751  158     .06     .01     .04       22.
    26 APR 0024    9     .00     .00     .00        0.           *     26 APR 0754  159     .05     .01     .04       18.
    26 APR 0027   10     .00     .00     .00        0.           *     26 APR 0757  160     .05     .01     .04       15.
    26 APR 0030   11     .00     .00     .00        0.           *     26 APR 0800  161     .02     .00     .01       13.
```

26 APR 0033	12	.00	.00	.00	0.	*	26 APR 0803	162	.01	.00	.01	11.
26 APR 0036	13	.00	.00	.00	0.	*	26 APR 0806	163	.01	.00	.01	8.
26 APR 0039	14	.00	.00	.00	0.	*	26 APR 0809	164	.01	.00	.01	6.
26 APR 0042	15	.00	.00	.00	0.	*	26 APR 0812	165	.01	.00	.01	5.
26 APR 0045	16	.00	.00	.00	0.	*	26 APR 0815	166	.01	.00	.01	4.
26 APR 0048	17	.00	.00	.00	0.	*	26 APR 0818	167	.01	.00	.01	3.
26 APR 0051	18	.00	.00	.00	0.	*	26 APR 0821	168	.01	.00	.01	3.
26 APR 0054	19	.00	.00	.00	0.	*	26 APR 0824	169	.01	.00	.01	3.
26 APR 0057	20	.00	.00	.00	0.	*	26 APR 0827	170	.01	.00	.01	2.
26 APR 0100	21	.00	.00	.00	0.	*	26 APR 0830	171	.01	.00	.01	2.
26 APR 0103	22	.00	.00	.00	0.	*	26 APR 0833	172	.01	.00	.01	2.
26 APR 0106	23	.00	.00	.00	0.	*	26 APR 0836	173	.01	.00	.01	2.
26 APR 0109	24	.00	.00	.00	0.	*	26 APR 0839	174	.01	.00	.01	2.
26 APR 0112	25	.00	.00	.00	0.	*	26 APR 0842	175	.01	.00	.01	2.
26 APR 0115	26	.00	.00	.00	0.	*	26 APR 0845	176	.01	.00	.01	2.
26 APR 0118	27	.00	.00	.00	0.	*	26 APR 0848	177	.01	.00	.01	2.
26 APR 0121	28	.00	.00	.00	0.	*	26 APR 0851	178	.01	.00	.01	2.
26 APR 0124	29	.00	.00	.00	0.	*	26 APR 0854	179	.01	.00	.01	2.
26 APR 0127	30	.00	.00	.00	0.	*	26 APR 0857	180	.01	.00	.01	2.
26 APR 0130	31	.00	.00	.00	0.	*	26 APR 0900	181	.01	.00	.01	1.
26 APR 0133	32	.00	.00	.00	0.	*	26 APR 0903	182	.01	.00	.01	1.
26 APR 0136	33	.00	.00	.00	0.	*	26 APR 0906	183	.01	.00	.01	1.
26 APR 0139	34	.00	.00	.00	0.	*	26 APR 0909	184	.01	.00	.01	1.
26 APR 0142	35	.00	.00	.00	0.	*	26 APR 0912	185	.01	.00	.00	1.
26 APR 0145	36	.00	.00	.00	0.	*	26 APR 0915	186	.01	.00	.00	1.
26 APR 0148	37	.00	.00	.00	0.	*	26 APR 0918	187	.01	.00	.00	1.
26 APR 0151	38	.00	.00	.00	0.	*	26 APR 0921	188	.01	.00	.00	1.
26 APR 0154	39	.00	.00	.00	0.	*	26 APR 0924	189	.01	.00	.00	1.
26 APR 0157	40	.00	.00	.00	0.	*	26 APR 0927	190	.01	.00	.00	1.
26 APR 0200	41	.00	.00	.00	0.	*	26 APR 0930	191	.01	.00	.00	1.
26 APR 0203	42	.00	.00	.00	0.	*	26 APR 0933	192	.01	.00	.00	1.
26 APR 0206	43	.00	.00	.00	0.	*	26 APR 0936	193	.00	.00	.00	1.
26 APR 0209	44	.00	.00	.00	0.	*	26 APR 0939	194	.00	.00	.00	1.
26 APR 0212	45	.00	.00	.00	0.	*	26 APR 0942	195	.00	.00	.00	1.
26 APR 0215	46	.00	.00	.00	0.	*	26 APR 0945	196	.00	.00	.00	1.
26 APR 0218	47	.00	.00	.00	0.	*	26 APR 0948	197	.00	.00	.00	1.
26 APR 0221	48	.00	.00	.00	0.	*	26 APR 0951	198	.00	.00	.00	1.
26 APR 0224	49	.00	.00	.00	0.	*	26 APR 0954	199	.00	.00	.00	1.
26 APR 0227	50	.00	.00	.00	0.	*	26 APR 0957	200	.00	.00	.00	1.
26 APR 0230	51	.00	.00	.00	0.	*	26 APR 1000	201	.00	.00	.00	1.
26 APR 0233	52	.00	.00	.00	0.	*	26 APR 1003	202	.00	.00	.00	1.
26 APR 0236	53	.00	.00	.00	0.	*	26 APR 1006	203	.00	.00	.00	1.
26 APR 0239	54	.00	.00	.00	0.	*	26 APR 1009	204	.00	.00	.00	1.
26 APR 0242	55	.00	.00	.00	0.	*	26 APR 1012	205	.00	.00	.00	1.
26 APR 0245	56	.00	.00	.00	0.	*	26 APR 1015	206	.00	.00	.00	1.
26 APR 0248	57	.00	.00	.00	0.	*	26 APR 1018	207	.00	.00	.00	1.
26 APR 0251	58	.00	.00	.00	0.	*	26 APR 1021	208	.00	.00	.00	1.
26 APR 0254	59	.00	.00	.00	0.	*	26 APR 1024	209	.00	.00	.00	1.
26 APR 0257	60	.00	.00	.00	0.	*	26 APR 1027	210	.00	.00	.00	1.
26 APR 0300	61	.00	.00	.00	0.	*	26 APR 1030	211	.00	.00	.00	1.
26 APR 0303	62	.00	.00	.00	0.	*	26 APR 1033	212	.00	.00	.00	1.
26 APR 0306	63	.00	.00	.00	0.	*	26 APR 1036	213	.00	.00	.00	1.
26 APR 0309	64	.00	.00	.00	0.	*	26 APR 1039	214	.00	.00	.00	1.
26 APR 0312	65	.00	.00	.00	0.	*	26 APR 1042	215	.00	.00	.00	1.
26 APR 0315	66	.00	.00	.00	0.	*	26 APR 1045	216	.00	.00	.00	1.
26 APR 0318	67	.00	.00	.00	0.	*	26 APR 1048	217	.00	.00	.00	1.
26 APR 0321	68	.00	.00	.00	0.	*	26 APR 1051	218	.00	.00	.00	1.
26 APR 0324	69	.00	.00	.00	0.	*	26 APR 1054	219	.00	.00	.00	1.
26 APR 0327	70	.00	.00	.00	0.	*	26 APR 1057	220	.00	.00	.00	1.
26 APR 0330	71	.00	.00	.00	0.	*	26 APR 1100	221	.00	.00	.00	1.
26 APR 0333	72	.00	.00	.00	0.	*	26 APR 1103	222	.00	.00	.00	1.
26 APR 0336	73	.00	.00	.00	0.	*	26 APR 1106	223	.00	.00	.00	1.
26 APR 0339	74	.00	.00	.00	0.	*	26 APR 1109	224	.00	.00	.00	1.
26 APR 0342	75	.00	.00	.00	0.	*	26 APR 1112	225	.00	.00	.00	1.
26 APR 0345	76	.00	.00	.00	0.	*	26 APR 1115	226	.00	.00	.00	1.
26 APR 0348	77	.00	.00	.00	0.	*	26 APR 1118	227	.00	.00	.00	1.

26 APR 0351	78	.00	.00	.00	0.	*	26 APR 1121	228	.00	.00	.00	1.
26 APR 0354	79	.00	.00	.00	0.	*	26 APR 1124	229	.00	.00	.00	1.
26 APR 0357	80	.00	.00	.00	0.	*	26 APR 1127	230	.00	.00	.00	1.
26 APR 0400	81	.00	.00	.00	0.	*	26 APR 1130	231	.00	.00	.00	1.
26 APR 0403	82	.00	.00	.00	0.	*	26 APR 1133	232	.00	.00	.00	1.
26 APR 0406	83	.00	.00	.00	0.	*	26 APR 1136	233	.00	.00	.00	1.
26 APR 0409	84	.00	.00	.00	0.	*	26 APR 1139	234	.00	.00	.00	1.
26 APR 0412	85	.00	.00	.00	0.	*	26 APR 1142	235	.00	.00	.00	1.
26 APR 0415	86	.00	.00	.00	0.	*	26 APR 1145	236	.00	.00	.00	1.
26 APR 0418	87	.00	.00	.00	0.	*	26 APR 1148	237	.00	.00	.00	1.
26 APR 0421	88	.00	.00	.00	0.	*	26 APR 1151	238	.00	.00	.00	1.
26 APR 0424	89	.00	.00	.00	0.	*	26 APR 1154	239	.00	.00	.00	1.
26 APR 0427	90	.00	.00	.00	0.	*	26 APR 1157	240	.00	.00	.00	1.
26 APR 0430	91	.00	.00	.00	0.	*	26 APR 1200	241	.00	.00	.00	1.
26 APR 0433	92	.00	.00	.00	0.	*	26 APR 1203	242	.00	.00	.00	1.
26 APR 0436	93	.00	.00	.00	0.	*	26 APR 1206	243	.00	.00	.00	1.
26 APR 0439	94	.00	.00	.00	0.	*	26 APR 1209	244	.00	.00	.00	1.
26 APR 0442	95	.00	.00	.00	0.	*	26 APR 1212	245	.00	.00	.00	1.
26 APR 0445	96	.00	.00	.00	0.	*	26 APR 1215	246	.00	.00	.00	1.
26 APR 0448	97	.00	.00	.00	0.	*	26 APR 1218	247	.00	.00	.00	1.
26 APR 0451	98	.00	.00	.00	0.	*	26 APR 1221	248	.00	.00	.00	1.
26 APR 0454	99	.00	.00	.00	0.	*	26 APR 1224	249	.00	.00	.00	1.
26 APR 0457	100	.00	.00	.00	0.	*	26 APR 1227	250	.00	.00	.00	0.
26 APR 0500	101	.00	.00	.00	0.	*	26 APR 1230	251	.00	.00	.00	0.
26 APR 0503	102	.00	.00	.00	0.	*	26 APR 1233	252	.00	.00	.00	0.
26 APR 0506	103	.00	.00	.00	0.	*	26 APR 1236	253	.00	.00	.00	0.
26 APR 0509	104	.00	.00	.00	0.	*	26 APR 1239	254	.00	.00	.00	0.
26 APR 0512	105	.00	.00	.00	0.	*	26 APR 1242	255	.00	.00	.00	0.
26 APR 0515	106	.00	.00	.00	0.	*	26 APR 1245	256	.00	.00	.00	0.
26 APR 0518	107	.00	.00	.00	0.	*	26 APR 1248	257	.00	.00	.00	0.
26 APR 0521	108	.00	.00	.00	0.	*	26 APR 1251	258	.00	.00	.00	0.
26 APR 0524	109	.00	.00	.00	0.	*	26 APR 1254	259	.00	.00	.00	0.
26 APR 0527	110	.01	.01	.00	0.	*	26 APR 1257	260	.00	.00	.00	0.
26 APR 0530	111	.01	.01	.00	0.	*	26 APR 1300	261	.00	.00	.00	0.
26 APR 0533	112	.01	.01	.00	0.	*	26 APR 1303	262	.00	.00	.00	0.
26 APR 0536	113	.01	.01	.00	0.	*	26 APR 1306	263	.00	.00	.00	0.
26 APR 0539	114	.01	.01	.00	0.	*	26 APR 1309	264	.00	.00	.00	0.
26 APR 0542	115	.01	.01	.00	0.	*	26 APR 1312	265	.00	.00	.00	0.
26 APR 0545	116	.01	.01	.00	0.	*	26 APR 1315	266	.00	.00	.00	0.
26 APR 0548	117	.01	.01	.00	0.	*	26 APR 1318	267	.00	.00	.00	0.
26 APR 0551	118	.01	.01	.00	0.	*	26 APR 1321	268	.00	.00	.00	0.
26 APR 0554	119	.01	.01	.00	0.	*	26 APR 1324	269	.00	.00	.00	0.
26 APR 0557	120	.01	.01	.00	0.	*	26 APR 1327	270	.00	.00	.00	0.
26 APR 0600	121	.01	.01	.00	0.	*	26 APR 1330	271	.00	.00	.00	0.
26 APR 0603	122	.01	.01	.00	0.	*	26 APR 1333	272	.00	.00	.00	0.
26 APR 0606	123	.01	.01	.00	0.	*	26 APR 1336	273	.00	.00	.00	0.
26 APR 0609	124	.01	.01	.00	0.	*	26 APR 1339	274	.00	.00	.00	0.
26 APR 0612	125	.01	.01	.00	0.	*	26 APR 1342	275	.00	.00	.00	0.
26 APR 0615	126	.01	.01	.00	0.	*	26 APR 1345	276	.00	.00	.00	0.
26 APR 0618	127	.01	.01	.00	0.	*	26 APR 1348	277	.00	.00	.00	0.
26 APR 0621	128	.01	.01	.00	0.	*	26 APR 1351	278	.00	.00	.00	0.
26 APR 0624	129	.01	.01	.00	0.	*	26 APR 1354	279	.00	.00	.00	0.
26 APR 0627	130	.01	.01	.00	0.	*	26 APR 1357	280	.00	.00	.00	0.
26 APR 0630	131	.01	.01	.00	0.	*	26 APR 1400	281	.00	.00	.00	0.
26 APR 0633	132	.01	.01	.00	0.	*	26 APR 1403	282	.00	.00	.00	0.
26 APR 0636	133	.01	.01	.00	0.	*	26 APR 1406	283	.00	.00	.00	0.
26 APR 0639	134	.01	.01	.00	0.	*	26 APR 1409	284	.00	.00	.00	0.
26 APR 0642	135	.01	.01	.00	0.	*	26 APR 1412	285	.00	.00	.00	0.
26 APR 0645	136	.01	.01	.00	0.	*	26 APR 1415	286	.00	.00	.00	0.
26 APR 0648	137	.01	.01	.00	0.	*	26 APR 1418	287	.00	.00	.00	0.
26 APR 0651	138	.01	.01	.00	0.	*	26 APR 1421	288	.00	.00	.00	0.
26 APR 0654	139	.01	.01	.00	0.	*	26 APR 1424	289	.00	.00	.00	0.
26 APR 0657	140	.02	.01	.00	0.	*	26 APR 1427	290	.00	.00	.00	0.
26 APR 0700	141	.05	.04	.01	0.	*	26 APR 1430	291	.00	.00	.00	0.
26 APR 0703	142	.05	.04	.01	1.	*	26 APR 1433	292	.00	.00	.00	0.
26 APR 0706	143	.05	.04	.01	1.	*	26 APR 1436	293	.00	.00	.00	0.

26 APR 0709	144	.06	.04	.01	1.	*	26 APR 1439	294	.00	.00	.00	0.
26 APR 0712	145	.06	.05	.02	2.	*	26 APR 1442	295	.00	.00	.00	0.
26 APR 0715	146	.09	.06	.03	3.	*	26 APR 1445	296	.00	.00	.00	0.
26 APR 0718	147	.10	.07	.04	4.	*	26 APR 1448	297	.00	.00	.00	0.
26 APR 0721	148	.12	.07	.05	6.	*	26 APR 1451	298	.00	.00	.00	0.
26 APR 0724	149	.20	.10	.10	8.	*	26 APR 1454	299	.00	.00	.00	0.
26 APR 0727	150	.38	.16	.22	13.	*	26 APR 1457	300	.00	.00	.00	0.
						*						

****

TOTAL RAINFALL = 3.59, TOTAL LOSS = 1.66, TOTAL EXCESS = 1.94

PEAK FLOW (CFS)	TIME (HR)		MAXIMUM AVERAGE FLOW 6-HR	24-HR	72-HR	14.95-HR
44.	7.65	(CFS)	4.	2.	2.	2.
		(INCHES)	1.872	1.932	1.932	1.932
		(AC-FT)	2.	2.	2.	2.

CUMULATIVE AREA = .02 SQ MI

RUNOFF SUMMARY
FLOW IN CUBIC FEET PER SECOND
TIME IN HOURS, AREA IN SQUARE MILES

OPERATION	STATION	PEAK FLOW	TIME OF PEAK	AVERAGE FLOW FOR MAXIMUM PERIOD 6-HOUR	24-HOUR	72-HOUR	BASIN AREA	MAXIMUM STAGE	TIME OF MAX STAGE
HYDROGRAPH AT	SUB4	146.	7.80	18.	7.	7.	.09		
HYDROGRAPH AT	SUB2	16.	7.80	2.	1.	1.	.01		
HYDROGRAPH AT	SUB6	50.	7.75	6.	2.	2.	.03		
HYDROGRAPH AT	SUB8	112.	7.70	12.	5.	5.	.06		
4 COMBINED AT	COMB1	320.	7.75	38.	16.	16.	.19		
HYDROGRAPH AT	SUB10	64.	7.65	6.	2.	2.	.03		
HYDROGRAPH AT	SUB1	80.	7.80	10.	4.	4.	.05		
HYDROGRAPH AT	SUB3	19.	7.70	2.	1.	1.	.01		
4 COMBINED AT	COMB2	463.	7.75	56.	23.	23.	.28		
HYDROGRAPH AT	SUB5	196.	7.80	26.	11.	11.	.13		
HYDROGRAPH AT	SUB12	418.	8.10	79.	33.	33.	.41		
HYDROGRAPH AT	SUB7	222.	7.80	29.	12.	12.	.15		
4 COMBINED AT	COMB3	1139.	7.85	190.	79.	79.	.97		
HYDROGRAPH AT	SUB14	101.	7.75	12.	5.	5.	.06		
HYDROGRAPH AT	SUB9	70.	7.60	6.	2.	2.	.03		
3 COMBINED AT	COMB4	1262.	7.80	207.	86.	86.	1.06		
HYDROGRAPH AT	SUB16	360.	8.10	67.	28.	28.	.35		
HYDROGRAPH AT	SUB11	113.	7.70	12.	5.	5.	.06		
HYDROGRAPH AT	SUB15	55.	7.55	4.	2.	2.	.02		
4 COMBINED AT	COMB5	1620.	7.85	290.	120.	120.	1.49		
ROUTED TO	DDD	220.	7.55	220.	111.	111.	1.49	1395.15	9.05
HYDROGRAPH AT	SUB22	483.	7.75	54.	22.	22.	.28		
2 COMBINED AT	COMB6	703.	7.75	271.	133.	133.	1.77		
HYDROGRAPH AT	SUB13	202.	7.75	23.	10.	10.	.12		
HYDROGRAPH AT	SUB18	71.	7.60	6.	2.	2.	.03		
HYDROGRAPH AT	SUB20	63.	7.75	8.	3.	3.	.04		
3 COMBINED AT	COMB1A	309.	7.70	37.	15.	15.	.19		
HYDROGRAPH AT	SUB26	114.	7.70	12.	5.	5.	.06		
HYDROGRAPH AT	SUB28	44.	7.65	4.	2.	2.	.02		

*** NORMAL END OF HEC-1 ***

HEC-1 INPUT

```
LINE          ID.......1.......2.......3.......4.......5.......6.......7.......8.......9......10

  1           ID        SQUAW PEAK HIGHWAY
  2           ID        HEC-1 HYPOTHETICAL RAINFALL
  3           ID         50-YEAR STORM
  4           ID        RAINFALL DISTRIBUTION COMPUTATIONS
  5           IT       6                    300
  6           IO       1

  7           KK        TEST CASE
  8           KM        RUNOFF FROM TEST WATERSHED FOR RAINFALL PATTERN
  9           PH       0     .01     .65    1.28    2.25    2.44    2.56    2.80    3.10    3.40
 10           BA     1.0
 11           LS              82
 12           UD     1.0
 13           ZZ
```

```
                                                  ****
                    FLOOD HYDROGRAPH PACKAGE HEC-1 (IBM XT 512K VERSION) -FEB 1,1985
U.S. ARMY CORPS OF ENGINEERS, THE HYDROLOGIC ENGINEERING CENTER, 609 SECOND STREET, DAVIS, CA. 95616
                                                  ****


                    SQUAW PEAK HIGHWAY
                    HEC-1 HYPOTHETICAL RAINFALL
                     50-YEAR STORM
                    RAINFALL DISTRIBUTION COMPUTATIONS

 6 IO        OUTPUT CONTROL VARIABLES
                IPRNT            1  PRINT CONTROL
                IPLOT            0  PLOT CONTROL
                QSCAL           0.  HYDROGRAPH PLOT SCALE

   IT        HYDROGRAPH TIME DATA
                 NMIN            6  MINUTES IN COMPUTATION INTERVAL
                IDATE      1     0  STARTING DATE
                ITIME         0000  STARTING TIME
                   NQ          300  NUMBER OF HYDROGRAPH ORDINATES
              NDDATE      2     0  ENDING DATE
              NDTIME         0554  ENDING TIME

          COMPUTATION INTERVAL     .10 HOURS
               TOTAL TIME BASE   29.90 HOURS

     ENGLISH UNITS


** *** *** *** *** *** *** *** *** *** *** *** *** *** *** *** *** *** *** *** *** *** *** *** *** *** *** *** *** *** *** *** *** ***


          **************
          *            *
 7 KK     *            *     TEST CASE
          *            *
          **************
                    RUNOFF FROM TEST WATERSHED FOR RAINFALL PATTERN

        SUBBASIN RUNOFF DATA

10 BA       SUBBASIN CHARACTERISTICS
                TAREA         1.00  SUBBASIN AREA

            PRECIPITATION DATA

 9 PH                                DEPTHS FOR   0-PERCENT HYPOTHETICAL STORM
            ..... HYDRO-35 .....   ............... TP-40 ...............   ........... TP-49 ...........
            5-MIN  15-MIN  60-MIN    2-HR    3-HR    6-HR   12-HR   24-HR   2-DAY   4-DAY   7-DAY  10-DAY
              .65    1.28    2.25    2.44    2.56    2.80    3.10    3.40     .00     .00     .00     .00

                                              STORM AREA =     .01

11 LS       SCS LOSS RATE
                STRTL          .44  INITIAL ABSTRACTION
              CRVNBR        82.00  CURVE NUMBER
                RTIMP          .00  PERCENT IMPERVIOUS AREA

12 UD       SCS DIMENSIONLESS UNITGRAPH
                TLAG         1.00  LAG
```

***

VALUE EXCEEDS TABLE IN LOGLOG 24.00006 .01667 24.00000

UNIT HYDROGRAPH
52 END-OF-PERIOD ORDINATES

13.	43.	82.	132.	199.	279.	353.	409.	444.	458.
458.	444.	416.	384.	346.	300.	249.	207.	177.	151.
129.	113.	97.	84.	70.	61.	52.	45.	38.	33.
28.	24.	20.	17.	15.	13.	11.	9.	8.	7.
6.	5.	5.	4.	3.	3.	2.	2.	2.	1.
1.	0.								

****

HYDROGRAPH AT STATION

****

DA	MON	HRMN	ORD	RAIN	LOSS	EXCESS	COMP Q	*	DA	MON	HRMN	ORD	RAIN	LOSS	EXCESS	COMP Q
1		0000	1	.00	.00	.00	0.	*	1		1500	151	.01	.00	.00	92.
1		0006	2	.00	.00	.00	0.	*	1		1506	152	.01	.00	.01	84.
1		0012	3	.00	.00	.00	0.	*	1		1512	153	.01	.00	.01	77.
1		0018	4	.00	.00	.00	0.	*	1		1518	154	.01	.00	.01	71.
1		0024	5	.00	.00	.00	0.	*	1		1524	155	.01	.00	.01	66.
1		0030	6	.00	.00	.00	0.	*	1		1530	156	.01	.00	.00	62.
1		0036	7	.00	.00	.00	0.	*	1		1536	157	.01	.00	.00	58.
1		0042	8	.00	.00	.00	0.	*	1		1542	158	.01	.00	.00	54.
1		0048	9	.00	.00	.00	0.	*	1		1548	159	.01	.00	.00	51.
1		0054	10	.00	.00	.00	0.	*	1		1554	160	.01	.00	.00	49.
1		0100	11	.00	.00	.00	0.	*	1		1600	161	.01	.00	.00	46.
1		0106	12	.00	.00	.00	0.	*	1		1606	162	.01	.00	.00	44.
1		0112	13	.00	.00	.00	0.	*	1		1612	163	.01	.00	.00	42.
1		0118	14	.00	.00	.00	0.	*	1		1618	164	.01	.00	.00	41.
1		0124	15	.00	.00	.00	0.	*	1		1624	165	.01	.00	.00	39.
1		0130	16	.00	.00	.00	0.	*	1		1630	166	.00	.00	.00	38.
1		0136	17	.00	.00	.00	0.	*	1		1636	167	.00	.00	.00	37.
1		0142	18	.00	.00	.00	0.	*	1		1642	168	.00	.00	.00	35.
1		0148	19	.00	.00	.00	0.	*	1		1648	169	.00	.00	.00	34.
1		0154	20	.00	.00	.00	0.	*	1		1654	170	.00	.00	.00	33.
1		0200	21	.00	.00	.00	0.	*	1		1700	171	.00	.00	.00	32.
1		0206	22	.00	.00	.00	0.	*	1		1706	172	.00	.00	.00	31.
1		0212	23	.00	.00	.00	0.	*	1		1712	173	.00	.00	.00	30.
1		0218	24	.00	.00	.00	0.	*	1		1718	174	.00	.00	.00	29.
1		0224	25	.00	.00	.00	0.	*	1		1724	175	.00	.00	.00	28.
1		0230	26	.00	.00	.00	0.	*	1		1730	176	.00	.00	.00	27.
1		0236	27	.00	.00	.00	0.	*	1		1736	177	.00	.00	.00	27.
1		0242	28	.00	.00	.00	0.	*	1		1742	178	.00	.00	.00	26.
1		0248	29	.00	.00	.00	0.	*	1		1748	179	.00	.00	.00	26.
1		0254	30	.00	.00	.00	0.	*	1		1754	180	.00	.00	.00	25.
1		0300	31	.00	.00	.00	0.	*	1		1800	181	.00	.00	.00	25.
1		0306	32	.00	.00	.00	0.	*	1		1806	182	.00	.00	.00	24.
1		0312	33	.00	.00	.00	0.	*	1		1812	183	.00	.00	.00	24.
1		0318	34	.00	.00	.00	0.	*	1		1818	184	.00	.00	.00	23.
1		0324	35	.00	.00	.00	0.	*	1		1824	185	.00	.00	.00	23.
1		0330	36	.00	.00	.00	0.	*	1		1830	186	.00	.00	.00	23.
1		0336	37	.00	.00	.00	0.	*	1		1836	187	.00	.00	.00	22.
1		0342	38	.00	.00	.00	0.	*	1		1842	188	.00	.00	.00	22.
1		0348	39	.00	.00	.00	0.	*	1		1848	189	.00	.00	.00	21.
1		0354	40	.00	.00	.00	0.	*	1		1854	190	.00	.00	.00	21.
1		0400	41	.00	.00	.00	0.	*	1		1900	191	.00	.00	.00	20.
1		0406	42	.00	.00	.00	0.	*	1		1906	192	.00	.00	.00	20.
1		0412	43	.00	.00	.00	0.	*	1		1912	193	.00	.00	.00	20.
1		0418	44	.00	.00	.00	0.	*	1		1918	194	.00	.00	.00	19.

1	0424	45	.00	.00	.00	0.	*	1	1924	195	.00	.00	.00	19.
1	0430	46	.00	.00	.00	0.	*	1	1930	196	.00	.00	.00	18.
1	0436	47	.00	.00	.00	0.	*	1	1936	197	.00	.00	.00	18.
1	0442	48	.00	.00	.00	0.	*	1	1942	198	.00	.00	.00	18.
1	0448	49	.00	.00	.00	0.	*	1	1948	199	.00	.00	.00	17.
1	0454	50	.00	.00	.00	0.	*	1	1954	200	.00	.00	.00	17.
1	0500	51	.00	.00	.00	0.	*	1	2000	201	.00	.00	.00	17.
1	0506	52	.00	.00	.00	0.	*	1	2006	202	.00	.00	.00	17.
1	0512	53	.00	.00	.00	0.	*	1	2012	203	.00	.00	.00	16.
1	0518	54	.00	.00	.00	0.	*	1	2018	204	.00	.00	.00	16.
1	0524	55	.00	.00	.00	0.	*	1	2024	205	.00	.00	.00	16.
1	0530	56	.00	.00	.00	0.	*	1	2030	206	.00	.00	.00	16.
1	0536	57	.00	.00	.00	0.	*	1	2036	207	.00	.00	.00	15.
1	0542	58	.00	.00	.00	0.	*	1	2042	208	.00	.00	.00	15.
1	0548	59	.00	.00	.00	0.	*	1	2048	209	.00	.00	.00	15.
1	0554	60	.00	.00	.00	0.	*	1	2054	210	.00	.00	.00	15.
1	0600	61	.00	.00	.00	0.	*	1	2100	211	.00	.00	.00	15.
1	0606	62	.00	.00	.00	0.	*	1	2106	212	.00	.00	.00	15.
1	0612	63	.00	.00	.00	0.	*	1	2112	213	.00	.00	.00	14.
1	0618	64	.00	.00	.00	0.	*	1	2118	214	.00	.00	.00	14.
1	0624	65	.00	.00	.00	0.	*	1	2124	215	.00	.00	.00	14.
1	0630	66	.00	.00	.00	0.	*	1	2130	216	.00	.00	.00	14.
1	0636	67	.00	.00	.00	0.	*	1	2136	217	.00	.00	.00	14.
1	0642	68	.00	.00	.00	0.	*	1	2142	218	.00	.00	.00	14.
1	0648	69	.00	.00	.00	0.	*	1	2148	219	.00	.00	.00	14.
1	0654	70	.00	.00	.00	0.	*	1	2154	220	.00	.00	.00	13.
1	0700	71	.00	.00	.00	0.	*	1	2200	221	.00	.00	.00	13.
1	0706	72	.00	.00	.00	0.	*	1	2206	222	.00	.00	.00	13.
1	0712	73	.00	.00	.00	0.	*	1	2212	223	.00	.00	.00	13.
1	0718	74	.00	.00	.00	0.	*	1	2218	224	.00	.00	.00	13.
1	0724	75	.00	.00	.00	0.	*	1	2224	225	.00	.00	.00	13.
1	0730	76	.00	.00	.00	0.	*	1	2230	226	.00	.00	.00	13.
1	0736	77	.00	.00	.00	0.	*	1	2236	227	.00	.00	.00	12.
1	0742	78	.00	.00	.00	0.	*	1	2242	228	.00	.00	.00	12.
1	0748	79	.01	.01	.00	0.	*	1	2248	229	.00	.00	.00	12.
1	0754	80	.01	.01	.00	0.	*	1	2254	230	.00	.00	.00	12.
1	0800	81	.01	.01	.00	0.	*	1	2300	231	.00	.00	.00	12.
1	0806	82	.01	.01	.00	0.	*	1	2306	232	.00	.00	.00	12.
1	0812	83	.01	.01	.00	0.	*	1	2312	233	.00	.00	.00	12.
1	0818	84	.01	.01	.00	0.	*	1	2318	234	.00	.00	.00	12.
1	0824	85	.01	.01	.00	0.	*	1	2324	235	.00	.00	.00	12.
1	0830	86	.01	.01	.00	0.	*	1	2330	236	.00	.00	.00	12.
1	0836	87	.01	.01	.00	0.	*	1	2336	237	.00	.00	.00	11.
1	0842	88	.01	.01	.00	0.	*	1	2342	238	.00	.00	.00	11.
1	0848	89	.01	.01	.00	0.	*	1	2348	239	.00	.00	.00	11.
1	0854	90	.01	.01	.00	0.	*	1	2354	240	.00	.00	.00	11.
1	0900	91	.01	.01	.00	0.	*	2	0000	241	.00	.00	.00	11.
1	0906	92	.01	.01	.00	0.	*	2	0006	242	.00	.00	.00	11.
1	0912	93	.01	.01	.00	0.	*	2	0012	243	.00	.00	.00	11.
1	0918	94	.01	.01	.00	0.	*	2	0018	244	.00	.00	.00	11.
1	0924	95	.01	.01	.00	0.	*	2	0024	245	.00	.00	.00	10.
1	0930	96	.01	.01	.00	0.	*	2	0030	246	.00	.00	.00	10.
1	0936	97	.01	.01	.00	0.	*	2	0036	247	.00	.00	.00	9.
1	0942	98	.01	.01	.00	0.	*	2	0042	248	.00	.00	.00	9.
1	0948	99	.01	.01	.00	0.	*	2	0048	249	.00	.00	.00	8.
1	0954	100	.01	.01	.00	0.	*	2	0054	250	.00	.00	.00	7.
1	1000	101	.01	.01	.00	0.	*	2	0100	251	.00	.00	.00	7.
1	1006	102	.01	.01	.00	0.	*	2	0106	252	.00	.00	.00	6.
1	1012	103	.01	.01	.00	0.	*	2	0112	253	.00	.00	.00	5.
1	1018	104	.01	.01	.00	0.	*	2	0118	254	.00	.00	.00	4.
1	1024	105	.01	.01	.00	0.	*	2	0124	255	.00	.00	.00	4.
1	1030	106	.01	.01	.00	0.	*	2	0130	256	.00	.00	.00	3.
1	1036	107	.01	.01	.00	0.	*	2	0136	257	.00	.00	.00	3.
1	1042	108	.01	.01	.00	0.	*	2	0142	258	.00	.00	.00	2.
1	1048	109	.01	.01	.00	0.	*	2	0148	259	.00	.00	.00	2.
1	1054	110	.01	.01	.00	0.	*	2	0154	260	.00	.00	.00	2.

1	1100	111	.01	.01	.00	0.	*	2	0200	261	.00	.00	.00	1.
1	1106	112	.01	.01	.00	0.	*	2	0206	262	.00	.00	.00	1.
1	1112	113	.02	.02	.00	0.	*	2	0212	263	.00	.00	.00	1.
1	1118	114	.02	.02	.00	0.	*	2	0218	264	.00	.00	.00	1.
1	1124	115	.02	.02	.00	0.	*	2	0224	265	.00	.00	.00	1.
1	1130	116	.02	.02	.00	1.	*	2	0230	266	.00	.00	.00	1.
1	1136	117	.08	.07	.01	1.	*	2	0236	267	.00	.00	.00	1.
1	1142	118	.10	.08	.02	2.	*	2	0242	268	.00	.00	.00	0.
1	1148	119	.12	.09	.03	4.	*	2	0248	269	.00	.00	.00	0.
1	1154	120	.19	.13	.07	8.	*	2	0254	270	.00	.00	.00	0.
1	1200	121	.40	.21	.19	15.	*	2	0300	271	.00	.00	.00	0.
1	1206	122	.73	.28	.45	34.	*	2	0306	272	.00	.00	.00	0.
1	1212	123	.26	.08	.18	65.	*	2	0312	273	.00	.00	.00	0.
1	1218	124	.17	.04	.13	108.	*	2	0318	274	.00	.00	.00	0.
1	1224	125	.11	.03	.08	165.	*	2	0324	275	.00	.00	.00	0.
1	1230	126	.09	.02	.07	235.	*	2	0330	276	.00	.00	.00	0.
1	1236	127	.03	.01	.02	315.	*	2	0336	277	.00	.00	.00	0.
1	1242	128	.02	.00	.02	392.	*	2	0342	278	.00	.00	.00	0.
1	1248	129	.02	.00	.01	458.	*	2	0348	279	.00	.00	.00	0.
1	1254	130	.02	.00	.01	508.	*	2	0354	280	.00	.00	.00	0.
1	1300	131	.02	.00	.01	539.	*	2	0400	281	.00	.00	.00	0.
1	1306	132	.01	.00	.01	553.	*	2	0406	282	.00	.00	.00	0.
1	1312	133	.01	.00	.01	550.	*	2	0412	283	.00	.00	.00	0.
1	1318	134	.01	.00	.01	532.	*	2	0418	284	.00	.00	.00	0.
1	1324	135	.01	.00	.01	504.	*	2	0424	285	.00	.00	.00	0.
1	1330	136	.01	.00	.01	468.	*	2	0430	286	.00	.00	.00	0.
1	1336	137	.01	.00	.01	424.	*	2	0436	287	.00	.00	.00	0.
1	1342	138	.01	.00	.01	376.	*	2	0442	288	.00	.00	.00	0.
1	1348	139	.01	.00	.01	331.	*	2	0448	289	.00	.00	.00	0.
1	1354	140	.01	.00	.01	293.	*	2	0454	290	.00	.00	.00	0.
1	1400	141	.01	.00	.01	259.	*	2	0500	291	.00	.00	.00	0.
1	1406	142	.01	.00	.01	230.	*	2	0506	292	.00	.00	.00	0.
1	1412	143	.01	.00	.01	205.	*	2	0512	293	.00	.00	.00	0.
1	1418	144	.01	.00	.01	184.	*	2	0518	294	.00	.00	.00	0.
1	1424	145	.01	.00	.01	165.	*	2	0524	295	.00	.00	.00	0.
1	1430	146	.01	.00	.01	148.	*	2	0530	296	.00	.00	.00	0.
1	1436	147	.01	.00	.01	134.	*	2	0536	297	.00	.00	.00	0.
1	1442	148	.01	.00	.01	121.	*	2	0542	298	.00	.00	.00	0.
1	1448	149	.01	.00	.01	110.	*	2	0548	299	.00	.00	.00	0.
1	1454	150	.01	.00	.01	100.	*	2	0554	300	.00	.00	.00	0.
							*							

****

TOTAL RAINFALL = 3.40, TOTAL LOSS = 1.70, TOTAL EXCESS = 1.70

PEAK FLOW (CFS)	TIME (HR)		MAXIMUM AVERAGE FLOW 6-HR	24-HR	72-HR	29.90-HR
553.	13.10	(CFS)	164.	46.	37.	37.
		(INCHES)	1.528	1.700	1.700	1.700
		(AC-FT)	81.	91.	91.	91.

CUMULATIVE AREA = 1.00 SQ MI

RUNOFF SUMMARY
FLOW IN CUBIC FEET PER SECOND
TIME IN HOURS, AREA IN SQUARE MILES

OPERATION	STATION	PEAK FLOW	TIME OF PEAK	AVERAGE FLOW FOR MAXIMUM PERIOD 6-HOUR	24-HOUR	72-HOUR	BASIN AREA	MAXIMUM STAGE	TIME OF MAX STAGE
HYDROGRAPH AT		553.	13.10	164.	46.	37.	1.00		

*** NORMAL END OF HEC-1 ***

```
LINE          ID.......1.......2.......3.......4.......5.......6.......7.......8.......9......10

  1           ID        SQUAW PEAK HIGHWAY
  2           ID        HEC-1 HYPOTHETICAL RAINFALL
  3           ID        100-YEAR STORM
  4           ID        RAINFALL DISTRIBUTION COMPUTATIONS
  5           IT       6                    300
  6           IO       1

  7           KK        TEST CASE
  8           KM        RUNOFF FROM TEST WATERSHED FOR RAINFALL PATTERN
  9           PH       0     .01     .73    1.44    2.52    2.76    2.91    3.20    3.50    3.80
 10           BA     1.0
 11           LS             82
 12           UD     1.0
 13           ZZ
```

```
                                                  ****
                    FLOOD HYDROGRAPH PACKAGE HEC-1 (IBM XT 512K VERSION) -FEB 1,1985
         U.S. ARMY CORPS OF ENGINEERS, THE HYDROLOGIC ENGINEERING CENTER, 609 SECOND STREET, DAVIS, CA. 95616
                                                  ****



                         SQUAW PEAK HIGHWAY
                         HEC-1 HYPOTHETICAL RAINFALL
                         100-YEAR STORM
                         RAINFALL DISTRIBUTION COMPUTATIONS

  6 IO        OUTPUT CONTROL VARIABLES
                    IPRNT           1  PRINT CONTROL
                    IPLOT           0  PLOT CONTROL
                    QSCAL          0.  HYDROGRAPH PLOT SCALE

   IT         HYDROGRAPH TIME DATA
                     NMIN           6  MINUTES IN COMPUTATION INTERVAL
                    IDATE      1    0  STARTING DATE
                    ITIME        0000  STARTING TIME
                       NQ         300  NUMBER OF HYDROGRAPH ORDINATES
                   NDDATE      2    0  ENDING DATE
                   NDTIME        0554  ENDING TIME

             COMPUTATION INTERVAL     .10 HOURS
                  TOTAL TIME BASE   29.90 HOURS

       ENGLISH UNITS


*** *** *** *** *** *** *** *** *** *** *** *** *** *** *** *** *** *** *** *** *** *** *** *** *** *** *** *** *** *** *** *** *** ***


          **************
          *            *
  7 KK    *            *     TEST CASE
          *            *
          **************
                              RUNOFF FROM TEST WATERSHED FOR RAINFALL PATTERN

             SUBBASIN RUNOFF DATA

 10 BA        SUBBASIN CHARACTERISTICS
                    TAREA         1.00  SUBBASIN AREA

              PRECIPITATION DATA

  9 PH                                DEPTHS FOR   0-PERCENT HYPOTHETICAL STORM
              ..... HYDRO-35 ......   ............... TP-40 ...............   ........... TP-49 ...........
              5-MIN  15-MIN  60-MIN    2-HR    3-HR    6-HR   12-HR   24-HR   2-DAY   4-DAY   7-DAY  10-DAY
                .73    1.44    2.52    2.76    2.91    3.20    3.50    3.80     .00     .00     .00     .00

                                                STORM AREA =      .01

 11 LS        SCS LOSS RATE
                     STRTL         .44  INITIAL ABSTRACTION
                    CRVNBR       82.00  CURVE NUMBER
                     RTIMP         .00  PERCENT IMPERVIOUS AREA

 12 UD        SCS DIMENSIONLESS UNITGRAPH
                      TLAG        1.00  LAG
```

***

VALUE EXCEEDS TABLE IN LOGLOG 24.00006 .01667 24.00000

UNIT HYDROGRAPH
52 END-OF-PERIOD ORDINATES

13.	43.	82.	132.	199.	279.	353.	409.	444.	458.
458.	444.	416.	384.	346.	300.	249.	207.	177.	151.
129.	113.	97.	84.	70.	61.	52.	45.	38.	33.
28.	24.	20.	17.	15.	13.	11.	9.	8.	7.
6.	5.	5.	4.	3.	3.	2.	2.	2.	1.
1.	0.								

****

HYDROGRAPH AT STATION

****

DA	MON	HRMN	ORD	RAIN	LOSS	EXCESS	COMP Q	*	DA	MON	HRMN	ORD	RAIN	LOSS	EXCESS	COMP Q
1		0000	1	.00	.00	.00	0.	*	1		1500	151	.01	.00	.01	113.
1		0006	2	.00	.00	.00	0.	*	1		1506	152	.01	.00	.01	104.
1		0012	3	.00	.00	.00	0.	*	1		1512	153	.01	.00	.01	96.
1		0018	4	.00	.00	.00	0.	*	1		1518	154	.01	.00	.01	88.
1		0024	5	.00	.00	.00	0.	*	1		1524	155	.01	.00	.01	82.
1		0030	6	.00	.00	.00	0.	*	1		1530	156	.01	.00	.01	76.
1		0036	7	.00	.00	.00	0.	*	1		1536	157	.01	.00	.00	71.
1		0042	8	.00	.00	.00	0.	*	1		1542	158	.01	.00	.00	66.
1		0048	9	.00	.00	.00	0.	*	1		1548	159	.01	.00	.00	62.
1		0054	10	.00	.00	.00	0.	*	1		1554	160	.01	.00	.00	58.
1		0100	11	.00	.00	.00	0.	*	1		1600	161	.01	.00	.00	55.
1		0106	12	.00	.00	.00	0.	*	1		1606	162	.01	.00	.00	52.
1		0112	13	.00	.00	.00	0.	*	1		1612	163	.01	.00	.00	49.
1		0118	14	.00	.00	.00	0.	*	1		1618	164	.01	.00	.00	47.
1		0124	15	.00	.00	.00	0.	*	1		1624	165	.01	.00	.00	45.
1		0130	16	.00	.00	.00	0.	*	1		1630	166	.00	.00	.00	43.
1		0136	17	.00	.00	.00	0.	*	1		1636	167	.00	.00	.00	41.
1		0142	18	.00	.00	.00	0.	*	1		1642	168	.00	.00	.00	39.
1		0148	19	.00	.00	.00	0.	*	1		1648	169	.00	.00	.00	38.
1		0154	20	.00	.00	.00	0.	*	1		1654	170	.00	.00	.00	36.
1		0200	21	.00	.00	.00	0.	*	1		1700	171	.00	.00	.00	34.
1		0206	22	.00	.00	.00	0.	*	1		1706	172	.00	.00	.00	33.
1		0212	23	.00	.00	.00	0.	*	1		1712	173	.00	.00	.00	32.
1		0218	24	.00	.00	.00	0.	*	1		1718	174	.00	.00	.00	31.
1		0224	25	.00	.00	.00	0.	*	1		1724	175	.00	.00	.00	30.
1		0230	26	.00	.00	.00	0.	*	1		1730	176	.00	.00	.00	29.
1		0236	27	.00	.00	.00	0.	*	1		1736	177	.00	.00	.00	28.
1		0242	28	.00	.00	.00	0.	*	1		1742	178	.00	.00	.00	28.
1		0248	29	.00	.00	.00	0.	*	1		1748	179	.00	.00	.00	27.
1		0254	30	.00	.00	.00	0.	*	1		1754	180	.00	.00	.00	26.
1		0300	31	.00	.00	.00	0.	*	1		1800	181	.00	.00	.00	26.
1		0306	32	.00	.00	.00	0.	*	1		1806	182	.00	.00	.00	25.
1		0312	33	.00	.00	.00	0.	*	1		1812	183	.00	.00	.00	25.
1		0318	34	.00	.00	.00	0.	*	1		1818	184	.00	.00	.00	24.
1		0324	35	.00	.00	.00	0.	*	1		1824	185	.00	.00	.00	24.
1		0330	36	.00	.00	.00	0.	*	1		1830	186	.00	.00	.00	23.
1		0336	37	.00	.00	.00	0.	*	1		1836	187	.00	.00	.00	23.
1		0342	38	.00	.00	.00	0.	*	1		1842	188	.00	.00	.00	22.
1		0348	39	.00	.00	.00	0.	*	1		1848	189	.00	.00	.00	22.
1		0354	40	.00	.00	.00	0.	*	1		1854	190	.00	.00	.00	22.
1		0400	41	.00	.00	.00	0.	*	1		1900	191	.00	.00	.00	21.
1		0406	42	.00	.00	.00	0.	*	1		1906	192	.00	.00	.00	21.
1		0412	43	.00	.00	.00	0.	*	1		1912	193	.00	.00	.00	20.
1		0418	44	.00	.00	.00	0.	*	1		1918	194	.00	.00	.00	20.

1	0424	45	.00	.00	.00	0.	*	1	1924	195	.00	.00	.00	19.
1	0430	46	.00	.00	.00	0.	*	1	1930	196	.00	.00	.00	19.
1	0436	47	.00	.00	.00	0.	*	1	1936	197	.00	.00	.00	19.
1	0442	48	.00	.00	.00	0.	*	1	1942	198	.00	.00	.00	18.
1	0448	49	.00	.00	.00	0.	*	1	1948	199	.00	.00	.00	18.
1	0454	50	.00	.00	.00	0.	*	1	1954	200	.00	.00	.00	18.
1	0500	51	.00	.00	.00	0.	*	1	2000	201	.00	.00	.00	17.
1	0506	52	.00	.00	.00	0.	*	1	2006	202	.00	.00	.00	17.
1	0512	53	.00	.00	.00	0.	*	1	2012	203	.00	.00	.00	17.
1	0518	54	.00	.00	.00	0.	*	1	2018	204	.00	.00	.00	17.
1	0524	55	.00	.00	.00	0.	*	1	2024	205	.00	.00	.00	16.
1	0530	56	.00	.00	.00	0.	*	1	2030	206	.00	.00	.00	16.
1	0536	57	.00	.00	.00	0.	*	1	2036	207	.00	.00	.00	16.
1	0542	58	.00	.00	.00	0.	*	1	2042	208	.00	.00	.00	16.
1	0548	59	.00	.00	.00	0.	*	1	2048	209	.00	.00	.00	16.
1	0554	60	.00	.00	.00	0.	*	1	2054	210	.00	.00	.00	15.
1	0600	61	.00	.00	.00	0.	*	1	2100	211	.00	.00	.00	15.
1	0606	62	.00	.00	.00	0.	*	1	2106	212	.00	.00	.00	15.
1	0612	63	.00	.00	.00	0.	*	1	2112	213	.00	.00	.00	15.
1	0618	64	.00	.00	.00	0.	*	1	2118	214	.00	.00	.00	15.
1	0624	65	.00	.00	.00	0.	*	1	2124	215	.00	.00	.00	15.
1	0630	66	.00	.00	.00	0.	*	1	2130	216	.00	.00	.00	14.
1	0636	67	.00	.00	.00	0.	*	1	2136	217	.00	.00	.00	14.
1	0642	68	.00	.00	.00	0.	*	1	2142	218	.00	.00	.00	14.
1	0648	69	.00	.00	.00	0.	*	1	2148	219	.00	.00	.00	14.
1	0654	70	.00	.00	.00	0.	*	1	2154	220	.00	.00	.00	14.
1	0700	71	.00	.00	.00	0.	*	1	2200	221	.00	.00	.00	14.
1	0706	72	.00	.00	.00	0.	*	1	2206	222	.00	.00	.00	14.
1	0712	73	.00	.00	.00	0.	*	1	2212	223	.00	.00	.00	13.
1	0718	74	.00	.00	.00	0.	*	1	2218	224	.00	.00	.00	13.
1	0724	75	.00	.00	.00	0.	*	1	2224	225	.00	.00	.00	13.
1	0730	76	.00	.00	.00	0.	*	1	2230	226	.00	.00	.00	13.
1	0736	77	.00	.00	.00	0.	*	1	2236	227	.00	.00	.00	13.
1	0742	78	.00	.00	.00	0.	*	1	2242	228	.00	.00	.00	13.
1	0748	79	.01	.01	.00	0.	*	1	2248	229	.00	.00	.00	13.
1	0754	80	.01	.01	.00	0.	*	1	2254	230	.00	.00	.00	13.
1	0800	81	.01	.01	.00	0.	*	1	2300	231	.00	.00	.00	12.
1	0806	82	.01	.01	.00	0.	*	1	2306	232	.00	.00	.00	12.
1	0812	83	.01	.01	.00	0.	*	1	2312	233	.00	.00	.00	12.
1	0818	84	.01	.01	.00	0.	*	1	2318	234	.00	.00	.00	12.
1	0824	85	.01	.01	.00	0.	*	1	2324	235	.00	.00	.00	12.
1	0830	86	.01	.01	.00	0.	*	1	2330	236	.00	.00	.00	12.
1	0836	87	.01	.01	.00	0.	*	1	2336	237	.00	.00	.00	12.
1	0842	88	.01	.01	.00	0.	*	1	2342	238	.00	.00	.00	12.
1	0848	89	.01	.01	.00	0.	*	1	2348	239	.00	.00	.00	12.
1	0854	90	.01	.01	.00	0.	*	1	2354	240	.00	.00	.00	11.
1	0900	91	.01	.01	.00	0.	*	2	0000	241	.00	.00	.00	11.
1	0906	92	.01	.01	.00	0.	*	2	0006	242	.00	.00	.00	11.
1	0912	93	.01	.01	.00	0.	*	2	0012	243	.00	.00	.00	11.
1	0918	94	.01	.01	.00	0.	*	2	0018	244	.00	.00	.00	11.
1	0924	95	.01	.01	.00	0.	*	2	0024	245	.00	.00	.00	11.
1	0930	96	.01	.01	.00	0.	*	2	0030	246	.00	.00	.00	10.
1	0936	97	.01	.01	.00	0.	*	2	0036	247	.00	.00	.00	10.
1	0942	98	.01	.01	.00	0.	*	2	0042	248	.00	.00	.00	9.
1	0948	99	.01	.01	.00	0.	*	2	0048	249	.00	.00	.00	8.
1	0954	100	.01	.01	.00	0.	*	2	0054	250	.00	.00	.00	8.
1	1000	101	.01	.01	.00	0.	*	2	0100	251	.00	.00	.00	7.
1	1006	102	.01	.01	.00	0.	*	2	0106	252	.00	.00	.00	6.
1	1012	103	.01	.01	.00	0.	*	2	0112	253	.00	.00	.00	5.
1	1018	104	.01	.01	.00	0.	*	2	0118	254	.00	.00	.00	5.
1	1024	105	.01	.01	.00	0.	*	2	0124	255	.00	.00	.00	4.
1	1030	106	.01	.01	.00	0.	*	2	0130	256	.00	.00	.00	3.
1	1036	107	.01	.01	.00	0.	*	2	0136	257	.00	.00	.00	3.
1	1042	108	.01	.01	.00	0.	*	2	0142	258	.00	.00	.00	2.
1	1048	109	.01	.01	.00	0.	*	2	0148	259	.00	.00	.00	2.
1	1054	110	.02	.01	.00	0.	*	2	0154	260	.00	.00	.00	2.

1	1100	111	.02	.02	.00	0.	*	2	0200	261	.00	.00	.00	2.
1	1106	112	.02	.02	.00	0.	*	2	0206	262	.00	.00	.00	1.
1	1112	113	.02	.02	.00	0.	*	2	0212	263	.00	.00	.00	1.
1	1118	114	.02	.02	.00	1.	*	2	0218	264	.00	.00	.00	1.
1	1124	115	.03	.02	.00	1.	*	2	0224	265	.00	.00	.00	1.
1	1130	116	.03	.03	.00	2.	*	2	0230	266	.00	.00	.00	1.
1	1136	117	.09	.08	.02	3.	*	2	0236	267	.00	.00	.00	1.
1	1142	118	.11	.08	.03	4.	*	2	0242	268	.00	.00	.00	1.
1	1148	119	.13	.09	.04	7.	*	2	0248	269	.00	.00	.00	0.
1	1154	120	.22	.13	.09	13.	*	2	0254	270	.00	.00	.00	0.
1	1200	121	.45	.22	.23	23.	*	2	0300	271	.00	.00	.00	0.
1	1206	122	.82	.28	.54	46.	*	2	0306	272	.00	.00	.00	0.
1	1212	123	.29	.07	.22	85.	*	2	0312	273	.00	.00	.00	0.
1	1218	124	.19	.04	.15	138.	*	2	0318	274	.00	.00	.00	0.
1	1224	125	.12	.03	.09	207.	*	2	0324	275	.00	.00	.00	0.
1	1230	126	.10	.02	.08	292.	*	2	0330	276	.00	.00	.00	0.
1	1236	127	.03	.01	.03	387.	*	2	0336	277	.00	.00	.00	0.
1	1242	128	.03	.01	.02	480.	*	2	0342	278	.00	.00	.00	0.
1	1248	129	.02	.00	.02	558.	*	2	0348	279	.00	.00	.00	0.
1	1254	130	.02	.00	.02	616.	*	2	0354	280	.00	.00	.00	0.
1	1300	131	.02	.00	.02	653.	*	2	0400	281	.00	.00	.00	0.
1	1306	132	.02	.00	.01	669.	*	2	0406	282	.00	.00	.00	0.
1	1312	133	.02	.00	.01	664.	*	2	0412	283	.00	.00	.00	0.
1	1318	134	.02	.00	.01	643.	*	2	0418	284	.00	.00	.00	0.
1	1324	135	.01	.00	.01	609.	*	2	0424	285	.00	.00	.00	0.
1	1330	136	.01	.00	.01	565.	*	2	0430	286	.00	.00	.00	0.
1	1336	137	.01	.00	.01	512.	*	2	0436	287	.00	.00	.00	0.
1	1342	138	.01	.00	.01	455.	*	2	0442	288	.00	.00	.00	0.
1	1348	139	.01	.00	.01	402.	*	2	0448	289	.00	.00	.00	0.
1	1354	140	.01	.00	.01	356.	*	2	0454	290	.00	.00	.00	0.
1	1400	141	.01	.00	.01	315.	*	2	0500	291	.00	.00	.00	0.
1	1406	142	.01	.00	.01	280.	*	2	0506	292	.00	.00	.00	0.
1	1412	143	.01	.00	.01	251.	*	2	0512	293	.00	.00	.00	0.
1	1418	144	.01	.00	.01	226.	*	2	0518	294	.00	.00	.00	0.
1	1424	145	.01	.00	.01	203.	*	2	0524	295	.00	.00	.00	0.
1	1430	146	.01	.00	.01	182.	*	2	0530	296	.00	.00	.00	0.
1	1436	147	.01	.00	.01	165.	*	2	0536	297	.00	.00	.00	0.
1	1442	148	.01	.00	.01	149.	*	2	0542	298	.00	.00	.00	0.
1	1448	149	.01	.00	.01	136.	*	2	0548	299	.00	.00	.00	0.
1	1454	150	.01	.00	.01	124.	*	2	0554	300	.00	.00	.00	0.
							*							

****

TOTAL RAINFALL = 3.80, TOTAL LOSS = 1.77, TOTAL EXCESS = 2.03

PEAK FLOW (CFS)	TIME (HR)		MAXIMUM AVERAGE FLOW 6-HR	24-HR	72-HR	29.90-HR
669.	13.10	(CFS)	199.	55.	44.	44.
		(INCHES)	1.852	2.033	2.033	2.033
		(AC-FT)	99.	108.	108.	108.

CUMULATIVE AREA = 1.00 SQ MI

RUNOFF SUMMARY
FLOW IN CUBIC FEET PER SECOND
TIME IN HOURS, AREA IN SQUARE MILES

OPERATION	STATION	PEAK FLOW	TIME OF PEAK	AVERAGE FLOW FOR MAXIMUM PERIOD 6-HOUR	24-HOUR	72-HOUR	BASIN AREA	MAXIMUM STAGE	TIME OF MAX STAGE
HYDROGRAPH AT		669.	13.10	199.	55.	44.	1.00		

*** NORMAL END OF HEC-1 ***
1

APPENDIX IV

INDIAN BEND WASH
TR-20
EXISTING CONDITIONS - 50-YEAR STORM

```
*****************80-80 LIST OF INPUT DATA FOR TR-20 HYDROLOGY*****************

JOB TR-20
TITLE     EQUAW PEAK PARKWAY      EXISTING CONDITIONS
TITLE     HEC-1 HYPOTHETICAL 50-YEAR RAIN  (DA=0.01)
 5 RAINFL 7            0.1
 8         0.00        0.00        0.00        0.01        0.02
 8         0.03        0.04        0.05        0.06        0.07
 8         0.08        0.09        0.10        0.11        0.12
 8         0.13        0.14        0.15        0.16        0.17
 8         0.18        0.19        0.20        0.21        0.22
 8         0.23        0.24        0.25        0.26        0.27
 8         0.28        0.29        0.30        0.31        0.32
 8         0.33        0.34        0.36        0.38        0.40
 8         0.42        0.50        0.60        0.72        0.91
 8         1.31        2.04        2.30        2.47        2.58
 8         2.67        2.70        2.72        2.74        2.76
 8         2.78        2.79        2.80        2.81        2.82
 8         2.83        2.84        2.85        2.86        2.87
 8         2.88        2.89        2.90        2.91        2.92
 8         2.93        2.94        2.95        2.96        2.97
 8         2.98        2.99        3.00        3.01        3.02
 8         3.03        3.04        3.05        3.06        3.07
 8         3.08        3.09        3.10        3.11        3.12
 9 ENDTBL
 6 RUNOFF 1 004       2 0.73        77.7        1.15                1
 6 RUNOFF 1 006       6 0.38        78.6        0.52                1
 6  REACH 3 007   6   7 6600.0      2.50        1.16                1
 6 RUNOFF 1 008       5 0.44        81.9        0.64                1
 6 ADDHYD 4 108   7 5 6                                             1
 6 ADDHYD 4 109   6 2 7                                             1
 6  REACH 3 009   7   6 6500.0      1.30        1.26                1
 6 RUNOFF 1 010       7 0.27        82.50       0.69                1
 6 ADDHYD 4 110   7 6 5                                             1
 6 RUNOFF 1 012       6 0.26        77.6        0.68                1
 6 ADDHYD 4 112   6 5 7                                             1
 6 RUNOFF 1 014       6 0.36        84.5        0.25                1
 6 ADDHYD 4 114   7 6 5                                             1
 6  REACH 3 015   5   2 2650.0      0.89        1.19                1
 6 RUNOFF 1 016       6 0.16        74.9        0.58                1
 6  REACH 3 017   6   7 5500.0      2.50        1.16                1
 6 RUNOFF 1 018       5 0.24        76.8        0.59                1
 6 ADDHYD 4 118   7 5 6                                             1
 6  REACH 3 019   6   7 7500.0      2.50        1.16                1
 6 RUNOFF 1 020       5 0.49        82.6        0.66                1
 6 ADDHYD 4 120   7 5 6                                             1
 6 ADDHYD 4 121   2 6 7                                             1
 6 RUNOFF 1 022       5 0.29        83.6        0.31                1
```

```
6 ADDHYD 4 122   5 7 6                                          1
6  REACH 3 023   6   2 3100.0      0.89        1.19             1
6 RUNOFF 1 024       5 0.24        82.1        0.67             1
6  REACH 3 025   5   6 4900.0      2.5         1.16             1
6 RUNOFF 1 026       5 0.21        84.0        0.47             1
6 ADDHYD 4 126   5 6 7                                          1
6 ADDHYD 4 127   7 2 3                                          1
6 RUNOFF 1 028       5 0.49        81.5        0.23             1
6  REACH 3 029   5   6 3300.0      0.64        1.16             1
6 RUNOFF 1 030       5 0.20        84.6        0.47             1
6 ADDHYD 4 130   6 5 7                                          1
6 ADDHYD 4 131   3 7 4                                          1
6  REACH 3 031   4   2 4500.0      0.89        1.19             1
6 RUNOFF 1 032       5 0.56        80.2        0.41             1
6  REACH 3 033   5   6 8500.0      1.46        1.26             1
6 RUNOFF 1 034       5 0.93        79.4        0.87             1
6 ADDHYD 4 134   6 5 4                                          1
6  REACH 3 035   4   3 8400.0      1.46        1.26             1
6 RUNOFF 1 036       6 0.89        82.3        0.79             1
6 ADDHYD 4 136   3 6 4                                          1
6 ADDHYD 4 137   4 2 7                                          1
6 RUNOFF 1 038       5 1.22        82.9        0.53             1
6  REACH 3 039   5   6 6700.0      1.75        1.16             1
6 RUNOFF 1 040       5 0.35        82.6        0.83             1
6 ADDHYD 4 140   5 6 4                                          1
6 ADDHYD 4 141   7 4 2                                          1
6 RUNOFF 1 042       5 0.77        83.9        0.47             1
6  REACH 3 043   5   6 6000.0      2.20        1.16             1
6 RUNOFF 1 044       5 0.29        82.9        0.60             1
6 ADDHYD 4 144   5 6 7                                          1
6 ADDHYD 4 145   7 2 3                                          1
6 RUNOFF 1 046       5 0.70        86.6        0.43             1
6 RUNOFF 1 048       6 0.74        80.9        0.57             1
6 ADDHYD 4 148   5 6 7                                          1
6 RUNOFF 1 050       5 1.00        83.6        0.43             1
6 ADDHYD 4 150   5 7 4                                          1
6  REACH 3 051   4   6 9200.0      2.10        1.16             1
6 RUNOFF 1 052       5 0.57        81.8        1.00             1
6 ADDHYD 4 152   5 6 7                                          1
6 ADDHYD 4 153   3 7 4                                          1
6 RUNOFF 1 054       5 1.33        78.1        0.82             1
6  REACH 3 055   5   6 6500.0      2.20        1.16             1
6 RUNOFF 1 056       5 0.76        80.4        0.99             1
6 ADDHYD 4 156   5 6 7                                          1
6  REACH 3 057   7   6 9500.0      0.64        1.38             1
6 RUNOFF 1 058       5 0.41        81.0        0.96             1
```

```
**********************80-80 LIST OF INPUT DATA (CONTINUED)*********************

 6 ADDHYD 4 158   6 5 7                                                    1
 6 ADDHYD 4 159   4 7 5                                                    1
 6  REACH 3 059   5   2 5200.0      0.89        1.19                       1
 6 RUNOFF 1 060       5 0.73        78.4        0.65                       1
 6  REACH 3 061   5   6 7000.0      1.46        1.26                       1
 6 RUNOFF 1 062       5 0.89        80.0        0.73                       1
 6 ADDHYD 4 162   5 6 7                                                    1
 6  REACH 3 063   7   6 9000.0      1.46        1.26                       1
 6 RUNOFF 1 064       5 1.35        80.1        1.08                       1
 6 ADDHYD 4 164   5 6 3                                                    1
 6 ADDHYD 4 165   3 2 7                                                    1
 6 RUNOFF 1 066       5 0.44        78.2        0.54                       1
 6  REACH 3 067   5   6 6500.0      0.64        1.38                       1
 6 RUNOFF 1 068       5 0.78        80.4        0.63                       1
 6 ADDHYD 4 168   5 6 4                                                    1
 6 ADDHYD 4 169   4 7 3                                                    1
 6  REACH 3 069   3   2 4000.0      0.89        1.19                       1
 6 RUNOFF 1 070       5 0.71        79.4        0.77                       1
 6  REACH 3 071   5   4 7700.0      1.26        1.46                       1
 6 RUNOFF 1 072       5 1.00        80.1        0.73                       1
 6 ADDHYD 4 172   5 4 7                                                    1
 6  REACH 3 073   7   6 8200.0      1.26        1.46                       1
 6 RUNOFF 1 074       5 1.00        82.4        0.84                       1
 6 ADDHYD 4 174   5 6 7                                                    1
 6 ADDHYD 4 175   7 2 4                                                    1
 6 RUNOFF 1 076       5 1.85        83.2        1.02                       1
 6  REACH 3 077   5   6 8000.0      0.75        1.38                       1
 6 RUNOFF 1 078       5 0.39        78.5        0.58                       1
 6 ADDHYD 4 178   5 6 3                                                    1
 6  REACH 3 079   3   6 5800.0      1.20        1.38                       1
 6 RUNOFF 1 080       5 0.27        77.7        0.50                       1
 6 ADDHYD 4 180   5 6 3                                                    1
 6 ADDHYD 4 181   3 4 7                                                    1
   ENDATA
 7 INCREM 6           0.10
 7 COMPUT 7 004   181   0.00        1.00        1.00        7 2  01  01
   ENDCMP 1
   ENDJOB 2

*****************************END OF 80-80 LIST******************************


EXECUTIVE CONTROL OPERATION INCREM     MAIN TIME INCREMENT =   .10 HOURS                                    RECORD ID


EXECUTIVE CONTROL OPERATION COMPUT     FROM XSECTION   4  TO XSECTION 181                                   RECORD ID
      STARTING TIME =   .00    RAIN DEPTH =  1.00    RAIN DURATION=  1.00    RAIN TABLE NO.= 7    ANT. MOIST. COND= 2
      ALTERNATE NO.= 1         STORM NO.= 1    MAIN TIME INCREMENT =   .10 HOURS


EXECUTIVE CONTROL OPERATION ENDCMP     COMPUTATIONS COMPLETED FOR PASS   1                                  RECORD ID


EXECUTIVE CONTROL OPERATION ENDJOB                                                                            RECORD ID
```

SUMMARY TABLE 1 - SELECTED RESULTS OF STANDARD AND EXECUTIVE CONTROL INSTRUCTIONS IN THE ORDER PERFORMED
(A STAR(*) AFTER THE PEAK DISCHARGE TIME AND RATE (CFS) VALUES INDICATES A FLAT TOP HYDROGRAPH
A QUESTION MARK(?) INDICATES A HYDROGRAPH WITH PEAK AS LAST POINT.)

SECTION/ STRUCTURE ID	STANDARD CONTROL OPERATION	DRAINAGE AREA (SQ MI)	RAIN TABLE #	ANTEC MOIST COND	MAIN TIME INCREM (HR)	PRECIPITATION BEGIN (HR)	PRECIPITATION AMOUNT (IN)	PRECIPITATION DURATION (HR)	RUNOFF AMOUNT (IN)	PEAK DISCHARGE ELEVATION (FT)	PEAK DISCHARGE TIME (HR)	PEAK DISCHARGE RATE (CFS)	PEAK DISCHARGE RATE (CSM)
ALTERNATE 1 STORM 1													
XSECTION 4	RUNOFF	.73	7	2	.10	.0	3.12	8.90	1.19	---	5.38	381.70	522.9
XSECTION 6	RUNOFF	.38	7	2	.10	.0	3.12	8.90	1.25	---	4.94	361.52	951.4
XSECTION 7	REACH	.38	7	2	.10	.0	3.12	8.90	1.25	---	5.22	253.77	667.8
XSECTION 8	RUNOFF	.44	7	2	.10	.0	3.12	8.90	1.46	---	5.00	433.75	985.8
XSECTION 108	ADDHYD	.82	7	2	.10	.0	3.12	8.90	1.37	---	5.08	649.20	791.7
XSECTION 109	ADDHYD	1.55	7	2	.10	.0	3.12	8.90	1.28	---	5.16	957.09	617.5
XSECTION 9	REACH	1.55	7	2	.10	.0	3.12	8.90	1.28	---	5.49	802.48	517.7
XSECTION 10	RUNOFF	.27	7	2	.10	.0	3.12	8.90	1.50	---	5.03	261.77	969.5
XSECTION 110	ADDHYD	1.82	7	2	.10	.0	3.12	8.90	1.32	---	5.38	939.98	516.5
XSECTION 12	RUNOFF	.26	7	2	.10	.0	3.12	8.90	1.19	---	5.04	198.04	761.7
XSECTION 112	ADDHYD	2.08	7	2	.10	.0	3.12	8.90	1.30	---	5.30	1073.79	516.2
XSECTION 14	RUNOFF	.36	7	2	.10	.0	3.12	8.90	1.66	---	4.72	696.31	1934.2
XSECTION 114	ADDHYD	2.44	7	2	.10	.0	3.12	8.90	1.35	---	5.15	1171.49	480.1
XSECTION 15	REACH	2.44	7	2	.10	.0	3.12	8.90	1.35	---	5.46	1102.05	451.7
XSECTION 16	RUNOFF	.16	7	2	.10	.0	3.12	8.90	1.03	---	4.99	115.00	718.8
XSECTION 17	REACH	.16	7	2	.10	.0	3.12	8.90	1.03	---	5.28	83.82	523.9
XSECTION 18	RUNOFF	.24	7	2	.10	.0	3.12	8.90	1.14	---	4.99	190.61	794.2
XSECTION 118	ADDHYD	.40	7	2	.10	.0	3.12	8.90	1.10	---	5.06	250.39	626.0
XSECTION 19	REACH	.40	7	2	.10	.0	3.12	8.90	1.10	---	5.52	180.50	451.2
XSECTION 20	RUNOFF	.49	7	2	.10	.0	3.12	8.90	1.51	---	5.02	493.41	1006.9
XSECTION 120	ADDHYD	.89	7	2	.10	.0	3.12	8.90	1.33	---	5.09	570.33	640.8
XSECTION 121	ADDHYD	3.33	7	2	.10	.0	3.12	8.90	1.35	---	5.27	1566.62	470.5
XSECTION 22	RUNOFF	.29	7	2	.10	.0	3.12	8.90	1.59	---	4.77	467.91	1613.5
XSECTION 122	ADDHYD	3.62	7	2	.10	.0	3.12	8.90	1.37	---	5.14	1691.89	467.4
XSECTION 23	REACH	3.62	7	2	.10	.0	3.12	8.90	1.37	---	5.51	1553.45	429.1
XSECTION 24	RUNOFF	.24	7	2	.10	.0	3.12	8.90	1.48	---	5.02	234.60	977.5
XSECTION 25	REACH	.24	7	2	.10	.0	3.12	8.90	1.48	---	5.28	188.95	787.3
XSECTION 26	RUNOFF	.21	7	2	.10	.0	3.12	8.90	1.61	---	4.88	277.66	1322.2
XSECTION 126	ADDHYD	.45	7	2	.10	.0	3.12	8.90	1.54	---	4.98	371.18	824.8
XSECTION 127	ADDHYD	4.07	7	2	.10	.0	3.12	8.90	1.39	---	5.39	1790.25	439.9
XSECTION 28	RUNOFF	.49	7	2	.10	.0	3.12	8.90	1.44	---	4.72	848.35	1731.3
XSECTION 29	REACH	.49	7	2	.10	.0	3.12	8.90	1.44	---	5.22	380.88	777.3

UMMARY TABLE 1 - SELECTED RESULTS OF STANDARD AND EXECUTIVE CONTROL INSTRUCTIONS IN THE ORDER PERFORMED
(A STAR(*) AFTER THE PEAK DISCHARGE TIME AND RATE (CFS) VALUES INDICATES A FLAT TOP HYDROGRAPH
A QUESTION MARK(?) INDICATES A HYDROGRAPH WITH PEAK AS LAST POINT.)

SECTION/ STRUCTURE ID	STANDARD CONTROL OPERATION	DRAINAGE AREA (SQ MI)	RAIN TABLE #	ANTEC MOIST COND	MAIN TIME INCREM (HR)	PRECIPITATION BEGIN (HR)	PRECIPITATION AMOUNT (IN)	PRECIPITATION DURATION (HR)	RUNOFF AMOUNT (IN)	PEAK DISCHARGE ELEVATION (FT)	PEAK DISCHARGE TIME (HR)	PEAK DISCHARGE RATE (CFS)	PEAK DISCHARGE RATE (CSM)
ALTERNATE 1 STORM 1													
XSECTION 30	RUNOFF	.20	7	2	.10	.0	3.12	8.90	1.66	---	4.88	271.84	1359.2
XSECTION 130	ADDHYD	.69	7	2	.10	.0	3.12	8.90	1.50	---	5.11	545.65	790.8
XSECTION 131	ADDHYD	4.76	7	2	.10	.0	3.12	8.90	1.40	---	5.28	2250.95	472.9
XSECTION 31	REACH	4.76	7	2	.10	.0	3.12	8.90	1.40	---	5.72	1946.24	408.9
XSECTION 32	RUNOFF	.56	7	2	.10	.0	3.12	8.90	1.35	---	4.84	667.60	1192.1
XSECTION 33	REACH	.56	7	2	.10	.0	3.12	8.90	1.35	---	5.25	413.17	737.8
XSECTION 34	RUNOFF	.93	7	2	.10	.0	3.12	8.90	1.30	---	5.18	656.35	705.8
XSECTION 134	ADDHYD	1.49	7	2	.10	.0	3.12	8.90	1.32	---	5.21	1064.86	714.7
XSECTION 35	REACH	1.49	7	2	.10	.0	3.12	8.90	1.32	---	5.53	835.53	560.8
XSECTION 36	RUNOFF	.89	7	2	.10	.0	3.12	8.90	1.49	---	5.11	776.71	872.7
XSECTION 136	ADDHYD	2.38	7	2	.10	.0	3.12	8.90	1.38	---	5.31	1378.82	579.3
XSECTION 137	ADDHYD	7.14	7	2	.10	.0	3.12	8.90	1.40	---	5.52	3134.92	439.1
SECTION 38	RUNOFF	1.22	7	2	.10	.0	3.12	8.90	1.53	---	4.92	1424.37	1167.5
XSECTION 39	REACH	1.22	7	2	.10	.0	3.12	8.90	1.54	---	5.33	959.11	786.2
XSECTION 40	RUNOFF	.35	7	2	.10	.0	3.12	8.90	1.51	---	5.13	301.41	861.2
XSECTION 140	ADDHYD	1.57	7	2	.10	.0	3.12	8.90	1.53	---	5.29	1226.35	781.1
XSECTION 141	ADDHYD	8.71	7	2	.10	.0	3.12	8.90	1.42	---	5.42	4256.54	488.7
XSECTION 42	RUNOFF	.77	7	2	.10	.0	3.12	8.90	1.61	---	4.88	1013.38	1316.1
XSECTION 43	REACH	.77	7	2	.10	.0	3.12	8.90	1.61	---	5.24	732.83	951.7
XSECTION 44	RUNOFF	.29	7	2	.10	.0	3.12	8.90	1.54	---	4.97	313.56	1081.2
XSECTION 144	ADDHYD	1.06	7	2	.10	.0	3.12	8.90	1.59	---	5.18	962.54	908.1
XSECTION 145	ADDHYD	9.77	7	2	.10	.0	3.12	8.90	1.44	---	5.35	5077.56	519.7
XSECTION 46	RUNOFF	.70	7	2	.10	.0	3.12	8.90	1.81	---	4.84	1099.07	1570.1
XSECTION 48	RUNOFF	.74	7	2	.10	.0	3.12	8.90	1.40	---	4.96	747.78	1010.5
XSECTION 148	ADDHYD	1.44	7	2	.10	.0	3.12	8.90	1.60	---	4.89	1783.88	1238.8
XSECTION 50	RUNOFF	1.00	7	2	.10	.0	3.12	8.90	1.59	---	4.85	1369.53	1369.5
XSECTION 150	ADDHYD	2.44	7	2	.10	.0	3.12	8.90	1.59	---	4.87	3128.75	1282.3
XSECTION 51	REACH	2.44	7	2	.10	.0	3.12	8.90	1.59	---	5.29	2004.43	821.5
XSECTION 52	RUNOFF	.57	7	2	.10	.0	3.12	8.90	1.46	---	5.26	411.04	721.1
XSECTION 152	ADDHYD	3.01	7	2	.10	.0	3.12	8.90	1.57	---	5.28	2414.79	802.3
XSECTION 153	ADDHYD	12.78	7	2	.10	.0	3.12	8.90	1.47	---	5.33	7479.78	585.3
XSECTION 54	RUNOFF	1.33	7	2	.10	.0	3.12	8.90	1.22	---	5.14	908.87	683.4
XSECTION 55	REACH	1.33	7	2	.10	.0	3.12	8.90	1.22	---	5.44	720.69	541.9
SECTION 56	RUNOFF	.76	7	2	.10	.0	3.12	8.90	1.37	---	5.26	516.63	679.8
XSECTION 156	ADDHYD	2.09	7	2	.10	.0	3.12	8.90	1.27	---	5.36	1206.78	577.4
XSECTION 57	REACH	2.09	7	2	.10	.0	3.12	8.90	1.27	---	5.83	958.85	458.8

JMMARY TABLE 1 - SELECTED RESULTS OF STANDARD AND EXECUTIVE CONTROL INSTRUCTIONS IN THE ORDER PERFORMED
(A STAR(*) AFTER THE PEAK DISCHARGE TIME AND RATE (CFS) VALUES INDICATES A FLAT TOP HYDROGRAPH
A QUESTION MARK(?) INDICATES A HYDROGRAPH WITH PEAK AS LAST POINT.)

SECTION/ STRUCTURE ID	STANDARD CONTROL OPERATION	DRAINAGE AREA (SQ MI)	RAIN TABLE #	ANTEC MOIST COND	MAIN TIME INCREM (HR)	PRECIPITATION BEGIN (HR)	PRECIPITATION AMOUNT (IN)	PRECIPITATION DURATION (HR)	RUNOFF AMOUNT (IN)	PEAK DISCHARGE ELEVATION (FT)	PEAK DISCHARGE TIME (HR)	PEAK DISCHARGE RATE (CFS)	PEAK DISCHARGE RATE (CSM)
ALTERNATE 1 STORM 1													
XSECTION 58	RUNOFF	.41	7	2	.10	.0	3.12	8.90	1.40	---	5.23	292.82	714.2
XSECTION 158	ADDHYD	2.50	7	2	.10	.0	3.12	8.90	1.29	---	5.75	1098.24	439.3
XSECTION 159	ADDHYD	15.28	7	2	.10	.0	3.12	8.90	1.44	---	5.36	8281.86	542.0
XSECTION 59	REACH	15.28	7	2	.10	.0	3.12	8.90	1.44	---	5.74	7059.76	462.0
XSECTION 60	RUNOFF	.73	7	2	.10	.0	3.12	8.90	1.24	---	5.03	595.40	815.6
XSECTION 61	REACH	.73	7	2	.10	.0	3.12	8.90	1.24	---	5.32	448.67	614.6
XSECTION 62	RUNOFF	.89	7	2	.10	.0	3.12	8.90	1.34	---	5.07	728.83	818.9
XSECTION 162	ADDHYD	1.62	7	2	.10	.0	3.12	8.90	1.29	---	5.16	1108.94	684.5
XSECTION 63	REACH	1.62	7	2	.10	.0	3.12	8.90	1.29	---	5.60	857.07	529.1
XSECTION 64	RUNOFF	1.35	7	2	.10	.0	3.12	8.90	1.35	---	5.32	841.69	623.5
XSECTION 164	ADDHYD	2.97	7	2	.10	.0	3.12	8.90	1.32	---	5.46	1618.59	545.0
XSECTION 165	ADDHYD	18.25	7	2	.10	.0	3.12	8.90	1.42	---	5.68	8487.69	465.1
,ECTION 66	RUNOFF	.44	7	2	.10	.0	3.12	8.90	1.23	---	4.94	401.64	912.8
XSECTION 67	REACH	.44	7	2	.10	.0	3.12	8.90	1.23	---	5.25	272.83	620.1
XSECTION 68	RUNOFF	.78	7	2	.10	.0	3.12	8.90	1.36	---	5.00	720.55	923.8
XSECTION 168	ADDHYD	1.22	7	2	.10	.0	3.12	8.90	1.31	---	5.06	935.76	767.0
XSECTION 169	ADDHYD	19.47	7	2	.10	.0	3.12	8.90	1.41	---	5.64	8860.22	455.1
XSECTION 69	REACH	19.47	7	2	.10	.0	3.12	8.90	1.41	---	5.95	8229.51	422.7
XSECTION 70	RUNOFF	.71	7	2	.10	.0	3.12	8.90	1.30	---	5.10	545.25	768.0
XSECTION 71	REACH	.71	7	2	.10	.0	3.12	8.90	1.30	---	5.31	491.64	692.5
XSECTION 72	RUNOFF	1.00	7	2	.10	.0	3.12	8.90	1.35	---	5.07	823.19	823.2
XSECTION 172	ADDHYD	1.71	7	2	.10	.0	3.12	8.90	1.33	---	5.16	1236.53	723.1
XSECTION 73	REACH	1.71	7	2	.10	.0	3.12	8.90	1.33	---	5.35	1160.27	678.5
XSECTION 74	RUNOFF	1.00	7	2	.10	.0	3.12	8.90	1.50	---	5.15	843.66	843.7
XSECTION 174	ADDHYD	2.71	7	2	.10	.0	3.12	8.90	1.39	---	5.27	1928.19	711.5
XSECTION 175	ADDHYD	22.18	7	2	.10	.0	3.12	8.90	1.41	---	5.87	9035.19	407.4
XSECTION 76	RUNOFF	1.85	7	2	.10	.0	3.12	8.90	1.56	---	5.27	1407.65	760.9
XSECTION 77	REACH	1.85	7	2	.10	.0	3.12	8.90	1.56	---	5.56	1208.30	653.1
XSECTION 78	RUNOFF	.39	7	2	.10	.0	3.12	8.90	1.25	---	4.98	343.72	881.3
XSECTION 178	ADDHYD	2.24	7	2	.10	.0	3.12	8.90	1.50	---	5.50	1313.91	586.6
XSECTION 79	REACH	2.24	7	2	.10	.0	3.12	8.90	1.50	---	5.69	1274.60	569.0
XSECTION 80	RUNOFF	.27	7	2	.10	.0	3.12	8.90	1.20	---	4.92	249.38	923.6
XSECTION 180	ADDHYD	2.51	7	2	.10	.0	3.12	8.90	1.47	---	5.67	1312.03	522.7
ECTION 181	ADDHYD	24.69	7	2	.10	.0	3.12	8.90	1.42	---	5.83	10283.95	416.5

APPENDIX V

INDIAN BEND WASH
TR-20
EXISTING CONDITIONS - 100-YEAR STORM

```
*****************80-80 LIST OF INPUT DATA FOR TR-20 HYDROLOGY*****************

JOB TR-20
TITLE     EQUAY PEAK PARKWAY      EXISTING CONDITIONS
TITLE     HEC-1 HYPOTHETICAL 100-YEAR RAIN (DA=0.01)
 5 RAINFL 7                0.1
 8          0.00          0.00          0.00          0.01          0.02
 8          0.03          0.04          0.05          0.06          0.07
 8          0.08          0.09          0.10          0.11          0.12
 8          0.13          0.14          0.15          0.16          0.17
 8          0.18          0.19          0.20          0.21          0.22
 8          0.23          0.24          0.25          0.26          0.27
 8          0.28          0.29          0.30          0.31          0.33
 8          0.35          0.37          0.39          0.41          0.44
 8          0.47          0.56          0.67          0.80          1.02
 8          1.47          2.29          2.58          2.77          2.89
 8          2.99          3.02          3.05          3.07          3.09
 8          3.11          3.13          3.15          3.17          3.18
 8          3.19          3.20          3.21          3.22          3.23
 8          3.24          3.25          3.26          3.27          3.28
 8          3.29          3.30          3.31          3.32          3.33
 8          3.34          3.35          3.36          3.37          3.38
 8          3.39          3.40          3.41          3.42          3.43
 8          3.44          3.45          3.46          3.47          3.48
 9 ENDTBL
 6 RUNOFF 1 004        2 0.73        77.7          1.15                  1
 6 RUNOFF 1 006        6 0.38        78.6          0.52                  1
 6  REACH 3 007   6    7 6600.0      2.50          1.16                  1
 6 RUNOFF 1 008        5 0.44        81.9          0.64                  1
 6 ADDHYD 4 108   7 5 6                                                   1
 6 ADDHYD 4 109   6 2 7                                                   1
 6  REACH 3 009   7    6 6500.0      1.30          1.26                  1
 6 RUNOFF 1 010        7 0.27        82.50         0.69                  1
 6 ADDHYD 4 110   7 6 5                                                   1
 6 RUNOFF 1 012        6 0.26        77.6          0.68                  1
 6 ADDHYD 4 112   6 5 7                                                   1
 6 RUNOFF 1 014        6 0.36        84.5          0.25                  1
 6 ADDHYD 4 114   7 6 5                                                   1
 6  REACH 3 015   5    2 2650.0      0.89          1.19                  1
 6 RUNOFF 1 016        6 0.16        74.9          0.58                  1
 6  REACH 3 017   6    7 5500.0      2.50          1.16                  1
 6 RUNOFF 1 018        5 0.24        76.8          0.59                  1
 6 ADDHYD 4 118   7 5 6                                                   1
 6  REACH 3 019   6    7 7500.0      2.50          1.16                  1
 6 RUNOFF 1 020        5 0.49        82.6          0.66                  1
 6 ADDHYD 4 120   7 5 6                                                   1
 6 ADDHYD 4 121   2 6 7                                                   1
 6 RUNOFF 1 022        5 0.29        83.6          0.31                  1
```

```
6 ADDHYD 4 122   5 7 6                                          1
6  REACH 3 023   6   2 3100.0      0.89        1.19             1
6 RUNOFF 1 024       5 0.24        82.1        0.67             1
6  REACH 3 025   5   6 4900.0      2.5         1.16             1
6 RUNOFF 1 026       5 0.21        84.0        0.47             1
6 ADDHYD 4 126   5 6 7                                          1
6 ADDHYD 4 127   7 2 3                                          1
6 RUNOFF 1 028       5 0.49        81.5        0.23             1
6  REACH 3 029   5   6 3300.0      0.64        1.16             1
6 RUNOFF 1 030       5 0.20        84.6        0.47             1
6 ADDHYD 4 130   6 5 7                                          1
6 ADDHYD 4 131   3 7 4                                          1
6  REACH 3 031   4   2 4500.0      0.89        1.19             1
6 RUNOFF 1 032       5 0.56        80.2        0.41             1
6  REACH 3 033   5   6 8500.0      1.46        1.26             1
6 RUNOFF 1 034       5 0.93        79.4        0.87             1
6 ADDHYD 4 134   6 5 4                                          1
6  REACH 3 035   4   3 8400.0      1.46        1.26             1
6 RUNOFF 1 036       6 0.89        82.3        0.85             1
6 ADDHYD 4 136   3 6 4                                          1
6 ADDHYD 4 137   4 2 7                                          1
6 RUNOFF 1 038       5 1.22        82.9        0.53             1
6  REACH 3 039   5   6 6700.0      1.75        1.16             1
6 RUNOFF 1 040       5 0.35        82.6        0.83             1
6 ADDHYD 4 140   5 6 4                                          1
6 ADDHYD 4 141   7 4 2                                          1
6 RUNOFF 1 042       5 0.77        83.9        0.47             1
6  REACH 3 043   5   6 6000.0      2.20        1.16             1
6 RUNOFF 1 044       5 0.29        82.9        0.60             1
6 ADDHYD 4 144   5 6 7                                          1
6 ADDHYD 4 145   7 2 3                                          1
6 RUNOFF 1 046       5 0.70        86.6        0.43             1
6 RUNOFF 1 048       6 0.74        80.9        0.57             1
6 ADDHYD 4 148   5 6 7                                          1
6 RUNOFF 1 050       5 1.00        83.6        0.43             1
6 ADDHYD 4 150   5 7 4                                          1
6  REACH 3 051   4   6 9200.0      2.10        1.16             1
6 RUNOFF 1 052       5 0.57        81.8        1.00             1
6 ADDHYD 4 152   5 6 7                                          1
6 ADDHYD 4 153   3 7 4                                          1
6 RUNOFF 1 054       5 1.33        78.1        0.82             1
6  REACH 3 055   5   6 6500.0      2.20        1.16             1
6 RUNOFF 1 056       5 0.76        80.4        0.99             1
6 ADDHYD 4 156   5 6 7                                          1
6  REACH 3 057   7   6 9500.0      0.64        1.38             1
6 RUNOFF 1 058       5 0.41        81.0        0.96             1
```

```
*********************80-80 LIST OF INPUT DATA (CONTINUED)********************

 6 ADDHYD 4 158   6 5 7                                                  1
 6 ADDHYD 4 159   4 7 5                                                  1
 6  REACH 3 059   5   2 5200.0      0.89        1.19                     1
 6 RUNOFF 1 060       5 0.73        78.4        0.65                     1
 6  REACH 3 061   5   6 7000.0      1.46        1.26                     1
 6 RUNOFF 1 062       5 0.89        80.0        0.73                     1
 6 ADDHYD 4 162   5 6 7                                                  1
 6  REACH 3 063   7   6 9000.0      1.46        1.26                     1
 6 RUNOFF 1 064       5 1.35        80.1        1.08                     1
 6 ADDHYD 4 164   5 6 3                                                  1
 6 ADDHYD 4 165   3 2 7                                                  1
 6 RUNOFF 1 066       5 0.44        78.2        0.54                     1
 6  REACH 3 067   5   6 6500.0      0.64        1.38                     1
 6 RUNOFF 1 068       5 0.78        80.4        0.63                     1
 6 ADDHYD 4 168   5 6 4                                                  1
 6 ADDHYD 4 169   4 7 3                                                  1
 6  REACH 3 069   3   2 4000.0      0.89        1.19                     1
 6 RUNOFF 1 070       5 0.71        79.4        0.77                     1
 6  REACH 3 071   5   4 7700.0      1.26        1.46                     1
 6 RUNOFF 1 072       5 1.00        80.1        0.73                     1
 6 ADDHYD 4 172   5 4 7                                                  1
 6  REACH 3 073   7   6 8200.0      1.26        1.46                     1
 6 RUNOFF 1 074       5 1.00        82.4        0.84                     1
 6 ADDHYD 4 174   5 6 7                                                  1
 6 ADDHYD 4 175   7 2 4                                                  1
 6 RUNOFF 1 076       5 1.85        83.2        1.02                     1
 6  REACH 3 077   5   6 8000.0      0.75        1.38                     1
 6 RUNOFF 1 078       5 0.39        78.5        0.58                     1
 6 ADDHYD 4 178   5 6 3                                                  1
 6  REACH 3 079   3   6 5800.0      1.20        1.38                     1
 6 RUNOFF 1 080       5 0.27        77.7        0.50                     1
 6 ADDHYD 4 180   5 6 3                                                  1
 6 ADDHYD 4 181   3 4 7                                                  1
   ENDATA
 7 INCREM 6             0.10
 7 COMPUT 7 004   181   0.00        1.00        1.00        7 2  01  01
   ENDCMP 1
   ENDJOB 2

*****************************END OF 80-80 LIST*****************************


EXECUTIVE CONTROL OPERATION INCREM     MAIN TIME INCREMENT =   .10 HOURS                                    RECORD ID


EXECUTIVE CONTROL OPERATION COMPUT     FROM XSECTION   4  TO XSECTION 181                                   RECORD ID
      STARTING TIME =   .00    RAIN DEPTH =  1.00    RAIN DURATION=  1.00    RAIN TABLE NO.= 7    ANT. MOIST. COND= 2
      ALTERNATE NO.= 1         STORM NO.= 1    MAIN TIME INCREMENT =   .10 HOURS


EXECUTIVE CONTROL OPERATION ENDCMP     COMPUTATIONS COMPLETED FOR PASS   1                                  RECORD ID


EXECUTIVE CONTROL OPERATION ENDJOB                                                                            RECORD ID
```

SUMMARY TABLE 1 - SELECTED RESULTS OF STANDARD AND EXECUTIVE CONTROL INSTRUCTIONS IN THE ORDER PERFORMED
(A STAR(*) AFTER THE PEAK DISCHARGE TIME AND RATE (CFS) VALUES INDICATES A FLAT TOP HYDROGRAPH
A QUESTION MARK(?) INDICATES A HYDROGRAPH WITH PEAK AS LAST POINT.)

SECTION/ STRUCTURE ID	STANDARD CONTROL OPERATION	DRAINAGE AREA (SQ MI)	RAIN TABLE #	ANTEC MOIST COND	MAIN TIME INCREM (HR)	PRECIPITATION BEGIN (HR)	PRECIPITATION AMOUNT (IN)	PRECIPITATION DURATION (HR)	RUNOFF AMOUNT (IN)	PEAK DISCHARGE ELEVATION (FT)	PEAK DISCHARGE TIME (HR)	PEAK DISCHARGE RATE (CFS)	PEAK DISCHARGE RATE (CSM)
ALTERNATE 1 STORM 1													
XSECTION 4	RUNOFF	.73	7	2	.10	.0	3.48	8.90	1.46	---	5.37	474.25	649.7
XSECTION 6	RUNOFF	.38	7	2	.10	.0	3.48	8.90	1.52	---	4.93	446.95	1176.2
XSECTION 7	REACH	.38	7	2	.10	.0	3.48	8.90	1.52	---	5.21	317.26	834.9
XSECTION 8	RUNOFF	.44	7	2	.10	.0	3.48	8.90	1.75	---	5.00	526.34	1196.2
XSECTION 108	ADDHYD	.82	7	2	.10	.0	3.48	8.90	1.65	---	5.07	798.08	973.3
XSECTION 109	ADDHYD	1.55	7	2	.10	.0	3.48	8.90	1.56	---	5.15	1187.18	765.9
XSECTION 9	REACH	1.55	7	2	.10	.0	3.48	8.90	1.56	---	5.47	1000.96	645.8
XSECTION 10	RUNOFF	.27	7	2	.10	.0	3.48	8.90	1.80	---	5.02	316.77	1173.2
XSECTION 110	ADDHYD	1.82	7	2	.10	.0	3.48	8.90	1.59	---	5.37	1170.68	643.2
XSECTION 12	RUNOFF	.26	7	2	.10	.0	3.48	8.90	1.46	---	5.04	246.24	947.1
XSECTION 112	ADDHYD	2.08	7	2	.10	.0	3.48	8.90	1.58	---	5.29	1337.85	643.2
XSECTION 14	RUNOFF	.36	7	2	.10	.0	3.48	8.90	1.97	---	4.72	833.76	2316.0
XSECTION 114	ADDHYD	2.44	7	2	.10	.0	3.48	8.90	1.63	---	5.16	1452.63	595.3
XSECTION 15	REACH	2.44	7	2	.10	.0	3.48	8.90	1.63	---	5.45	1372.92	562.7
XSECTION 16	RUNOFF	.16	7	2	.10	.0	3.48	8.90	1.28	---	4.98	145.39	908.7
XSECTION 17	REACH	.16	7	2	.10	.0	3.48	8.90	1.28	---	5.27	107.13	669.6
XSECTION 18	RUNOFF	.24	7	2	.10	.0	3.48	8.90	1.40	---	4.98	238.11	992.1
XSECTION 118	ADDHYD	.40	7	2	.10	.0	3.48	8.90	1.35	---	5.05	316.76	791.9
XSECTION 19	REACH	.40	7	2	.10	.0	3.48	8.90	1.35	---	5.40	229.93	574.8
XSECTION 20	RUNOFF	.49	7	2	.10	.0	3.48	8.90	1.81	---	5.01	596.33	1217.0
XSECTION 120	ADDHYD	.89	7	2	.10	.0	3.48	8.90	1.60	---	5.08	742.72	834.5
XSECTION 121	ADDHYD	3.33	7	2	.10	.0	3.48	8.90	1.63	---	5.24	1971.21	592.0
XSECTION 22	RUNOFF	.29	7	2	.10	.0	3.48	8.90	1.89	---	4.77	562.38	1939.2
XSECTION 122	ADDHYD	3.62	7	2	.10	.0	3.48	8.90	1.65	---	5.13	2125.20	587.1
XSECTION 23	REACH	3.62	7	2	.10	.0	3.48	8.90	1.65	---	5.48	1952.12	539.3
XSECTION 24	RUNOFF	.24	7	2	.10	.0	3.48	8.90	1.78	---	5.02	284.34	1184.7
XSECTION 25	REACH	.24	7	2	.10	.0	3.48	8.90	1.78	---	5.27	230.76	961.5
XSECTION 26	RUNOFF	.21	7	2	.10	.0	3.48	8.90	1.92	---	4.88	333.19	1586.6
XSECTION 126	ADDHYD	.45	7	2	.10	.0	3.48	8.90	1.84	---	4.98	450.42	1000.9
XSECTION 127	ADDHYD	4.07	7	2	.10	.0	3.48	8.90	1.67	---	5.37	2247.14	552.1
XSECTION 28	RUNOFF	.49	7	2	.10	.0	3.48	8.90	1.74	---	4.71	1031.60	2105.3
XSECTION 29	REACH	.49	7	2	.10	.0	3.48	8.90	1.73	---	5.21	471.21	961.7

SUMMARY TABLE 1 - SELECTED RESULTS OF STANDARD AND EXECUTIVE CONTROL INSTRUCTIONS IN THE ORDER PERFORMED
(A STAR(*) AFTER THE PEAK DISCHARGE TIME AND RATE (CFS) VALUES INDICATES A FLAT TOP HYDROGRAPH
A QUESTION MARK(?) INDICATES A HYDROGRAPH WITH PEAK AS LAST POINT.)

SECTION/ STRUCTURE ID	STANDARD CONTROL OPERATION	DRAINAGE AREA (SQ MI)	RAIN TABLE #	ANTEC MOIST COND	MAIN TIME INCREM (HR)	PRECIPITATION BEGIN (HR)	PRECIPITATION AMOUNT (IN)	PRECIPITATION DURATION (HR)	RUNOFF AMOUNT (IN)	PEAK DISCHARGE ELEVATION (FT)	PEAK DISCHARGE TIME (HR)	PEAK DISCHARGE RATE (CFS)	PEAK DISCHARGE RATE (CSM)
ALTERNATE 1 STORM 1													
XSECTION 30	RUNOFF	.20	7	2	.10	.0	3.48	8.90	1.97	---	4.88	325.20	1626.0
XSECTION 130	ADDHYD	.69	7	2	.10	.0	3.48	8.90	1.80	---	5.10	669.32	970.0
XSECTION 131	ADDHYD	4.76	7	2	.10	.0	3.48	8.90	1.69	---	5.27	2813.46	591.1
XSECTION 31	REACH	4.76	7	2	.10	.0	3.48	8.90	1.69	---	5.69	2439.49	512.5
XSECTION 32	RUNOFF	.56	7	2	.10	.0	3.48	8.90	1.64	---	4.84	819.02	1462.5
XSECTION 33	REACH	.56	7	2	.10	.0	3.48	8.90	1.63	---	5.23	516.39	922.1
XSECTION 34	RUNOFF	.93	7	2	.10	.0	3.48	8.90	1.58	---	5.17	806.92	867.7
XSECTION 134	ADDHYD	1.49	7	2	.10	.0	3.48	8.90	1.60	---	5.20	1318.34	884.8
XSECTION 35	REACH	1.49	7	2	.10	.0	3.48	8.90	1.60	---	5.51	1046.87	702.6
XSECTION 36	RUNOFF	.89	7	2	.10	.0	3.48	8.90	1.79	---	5.14	905.28	1017.2
XSECTION 136	ADDHYD	2.38	7	2	.10	.0	3.48	8.90	1.67	---	5.33	1743.70	732.6
XSECTION 137	ADDHYD	7.14	7	2	.10	.0	3.48	8.90	1.68	---	5.50	3976.49	556.9
XSECTION 38	RUNOFF	1.22	7	2	.10	.0	3.48	8.90	1.83	---	4.92	1720.36	1410.1
XSECTION 39	REACH	1.22	7	2	.10	.0	3.48	8.90	1.83	---	5.32	1171.04	959.9
XSECTION 40	RUNOFF	.35	7	2	.10	.0	3.48	8.90	1.81	---	5.13	364.44	1041.3
XSECTION 140	ADDHYD	1.57	7	2	.10	.0	3.48	8.90	1.83	---	5.28	1495.46	952.5
XSECTION 141	ADDHYD	8.71	7	2	.10	.0	3.48	8.90	1.71	---	5.41	5342.01	613.3
XSECTION 42	RUNOFF	.77	7	2	.10	.0	3.48	8.90	1.91	---	4.88	1216.66	1580.1
XSECTION 43	REACH	.77	7	2	.10	.0	3.48	8.90	1.91	---	5.23	888.84	1154.3
XSECTION 44	RUNOFF	.29	7	2	.10	.0	3.48	8.90	1.83	---	4.97	378.53	1305.3
XSECTION 144	ADDHYD	1.06	7	2	.10	.0	3.48	8.90	1.89	---	5.17	1167.09	1101.0
XSECTION 145	ADDHYD	9.77	7	2	.10	.0	3.48	8.90	1.73	---	5.35	6325.02	647.4
XSECTION 46	RUNOFF	.70	7	2	.10	.0	3.48	8.90	2.13	---	4.84	1303.09	1861.6
XSECTION 48	RUNOFF	.74	7	2	.10	.0	3.48	8.90	1.68	---	4.95	912.17	1232.7
XSECTION 148	ADDHYD	1.44	7	2	.10	.0	3.48	8.90	1.90	---	4.88	2141.65	1487.3
XSECTION 50	RUNOFF	1.00	7	2	.10	.0	3.48	8.90	1.89	---	4.84	1648.99	1649.0
XSECTION 150	ADDHYD	2.44	7	2	.10	.0	3.48	8.90	1.90	---	4.86	3759.67	1540.8
XSECTION 51	REACH	2.44	7	2	.10	.0	3.48	8.90	1.89	---	5.27	2435.16	998.0
XSECTION 52	RUNOFF	.57	7	2	.10	.0	3.48	8.90	1.75	---	5.25	499.09	875.6
XSECTION 152	ADDHYD	3.01	7	2	.10	.0	3.48	8.90	1.87	---	5.27	2933.63	974.6
XSECTION 153	ADDHYD	12.78	7	2	.10	.0	3.48	8.90	1.76	---	5.32	9232.67	722.4
XSECTION 54	RUNOFF	1.33	7	2	.10	.0	3.48	8.90	1.48	---	5.13	1126.60	847.1
XSECTION 55	REACH	1.33	7	2	.10	.0	3.48	8.90	1.49	---	5.42	901.69	678.0
XSECTION 56	RUNOFF	.76	7	2	.10	.0	3.48	8.90	1.65	---	5.25	632.74	832.5
XSECTION 156	ADDHYD	2.09	7	2	.10	.0	3.48	8.90	1.54	---	5.35	1497.97	716.7
XSECTION 57	REACH	2.09	7	2	.10	.0	3.48	8.90	1.54	---	5.81	1209.21	578.6

SUMMARY TABLE 1 - SELECTED RESULTS OF STANDARD AND EXECUTIVE CONTROL INSTRUCTIONS IN THE ORDER PERFORMED
(A STAR(*) AFTER THE PEAK DISCHARGE TIME AND RATE (CFS) VALUES INDICATES A FLAT TOP HYDROGRAPH
A QUESTION MARK(?) INDICATES A HYDROGRAPH WITH PEAK AS LAST POINT.)

SECTION/ STRUCTURE ID	STANDARD CONTROL OPERATION	DRAINAGE AREA (SQ MI)	RAIN TABLE #	ANTEC MOIST COND	MAIN TIME INCREM (HR)	PRECIPITATION BEGIN (HR)	PRECIPITATION AMOUNT (IN)	PRECIPITATION DURATION (HR)	RUNOFF AMOUNT (IN)	PEAK DISCHARGE ELEVATION (FT)	PEAK DISCHARGE TIME (HR)	PEAK DISCHARGE RATE (CFS)	PEAK DISCHARGE RATE (CSM
ALTERNATE 1 STORM 1													
XSECTION 58	RUNOFF	.41	7	2	.10	.0	3.48	8.90	1.69	---	5.22	357.11	871.(
XSECTION 158	ADDHYD	2.50	7	2	.10	.0	3.48	8.90	1.57	---	5.73	1384.57	553.8
XSECTION 159	ADDHYD	15.28	7	2	.10	.0	3.48	8.90	1.73	---	5.35	10258.81	671.(
XSECTION 59	REACH	15.28	7	2	.10	.0	3.48	8.90	1.73	---	5.72	8792.57	575.(
XSECTION 60	RUNOFF	.73	7	2	.10	.0	3.48	8.90	1.51	---	5.02	736.57	1009.(
XSECTION 61	REACH	.73	7	2	.10	.0	3.48	8.90	1.51	---	5.30	563.30	771.8
XSECTION 62	RUNOFF	.89	7	2	.10	.0	3.48	8.90	1.62	---	5.06	893.31	1003.7
XSECTION 162	ADDHYD	1.62	7	2	.10	.0	3.48	8.90	1.57	---	5.15	1378.44	850.9
XSECTION 63	REACH	1.62	7	2	.10	.0	3.48	8.90	1.57	---	5.48	1076.76	664.7
XSECTION 64	RUNOFF	1.35	7	2	.10	.0	3.48	8.90	1.63	---	5.31	1031.43	764.(
XSECTION 164	ADDHYD	2.97	7	2	.10	.0	3.48	8.90	1.59	---	5.40	2072.68	697.9
XSECTION 165	ADDHYD	18.25	7	2	.10	.0	3.48	8.90	1.71	---	5.65	10531.10	577.(
XSECTION 66	RUNOFF	.44	7	2	.10	.0	3.48	8.90	1.49	---	4.93	498.36	1132.8
XSECTION 67	REACH	.44	7	2	.10	.0	3.48	8.90	1.49	---	5.23	347.31	789.3
XSECTION 68	RUNOFF	.78	7	2	.10	.0	3.48	8.90	1.65	---	5.00	881.48	1130.3
XSECTION 168	ADDHYD	1.22	7	2	.10	.0	3.48	8.90	1.59	---	5.05	1163.13	953.4
XSECTION 169	ADDHYD	19.47	7	2	.10	.0	3.48	8.90	1.70	---	5.62	10990.05	564.9
XSECTION 69	REACH	19.47	7	2	.10	.0	3.48	8.90	1.70	---	5.92	10246.29	526.3
XSECTION 70	RUNOFF	.71	7	2	.10	.0	3.48	8.90	1.58	---	5.09	670.54	944.4
XSECTION 71	REACH	.71	7	2	.10	.0	3.48	8.90	1.58	---	5.30	611.42	861.1
XSECTION 72	RUNOFF	1.00	7	2	.10	.0	3.48	8.90	1.63	---	5.06	1008.40	1008.4
XSECTION 172	ADDHYD	1.71	7	2	.10	.0	3.48	8.90	1.60	---	5.15	1532.14	896.0
XSECTION 73	REACH	1.71	7	2	.10	.0	3.48	8.90	1.60	---	5.33	1445.79	845.5
XSECTION 74	RUNOFF	1.00	7	2	.10	.0	3.48	8.90	1.79	---	5.14	1021.03	1021.0
XSECTION 174	ADDHYD	2.71	7	2	.10	.0	3.48	8.90	1.67	---	5.25	2381.58	878.8
XSECTION 175	ADDHYD	22.18	7	2	.10	.0	3.48	8.90	1.70	---	5.84	11263.78	507.8
XSECTION 76	RUNOFF	1.85	7	2	.10	.0	3.48	8.90	1.85	---	5.26	1696.81	917.2
XSECTION 77	REACH	1.85	7	2	.10	.0	3.48	8.90	1.85	---	5.64	1474.98	797.3
XSECTION 78	RUNOFF	.39	7	2	.10	.0	3.48	8.90	1.52	---	4.97	424.98	1089.7
XSECTION 178	ADDHYD	2.24	7	2	.10	.0	3.48	8.90	1.80	---	5.60	1572.88	702.2
XSECTION 79	REACH	2.24	7	2	.10	.0	3.48	8.90	1.80	---	5.78	1529.02	682.6
XSECTION 80	RUNOFF	.27	7	2	.10	.0	3.48	8.90	1.46	---	4.91	310.19	1148.8
XSECTION 180	ADDHYD	2.51	7	2	.10	.0	3.48	8.90	1.76	---	5.77	1566.48	624.1
XSECTION 181	ADDHYD	24.69	7	2	.10	.0	3.48	8.90	1.70	---	5.82	12820.44	519.3

APPENDIX VI

INDIAN BEND WASH
TR-20
PROPOSED CONDITIONS - 50-YEAR STORM

```
******************80-80 LIST OF INPUT DATA FOR TR-20 HYDROLOGY******************

JOB TR-20
TITLE     SQUAW PEAK PARKWAY      PROPOSED ALLIGNMENT
TITLE     HEC-1 HYPOTHETICAL 50-YEAR RAIN  (DA=0.01)
 5 RAINFL 7            0.1
 8          0.00        0.00        0.00        0.01        0.02
 8          0.03        0.04        0.05        0.06        0.07
 8          0.08        0.09        0.10        0.11        0.12
 8          0.13        0.14        0.15        0.16        0.17
 8          0.18        0.19        0.20        0.21        0.22
 8          0.23        0.24        0.25        0.26        0.27
 8          0.28        0.29        0.30        0.31        0.32
 8          0.33        0.34        0.35        0.38        0.40
 8          0.42        0.50        0.60        0.72        0.91
 8          1.31        2.04        2.30        2.47        2.58
 8          2.67        2.70        2.72        2.74        2.76
 8          2.78        2.79        2.80        2.81        2.82
 8          2.83        2.84        2.85        2.86        2.87
 8          2.88        2.89        2.90        2.91        2.92
 8          2.93        2.94        2.95        2.96        2.97
 8          2.98        2.99        3.00        3.01        3.02
 8          3.03        3.04        3.05        3.06        3.07
 8          3.08        3.09        3.10        3.11        3.12
 9 ENDTBL
 6 RUNOFF 1 084       2 0.69        77.7        1.09                1
 6 RUNOFF 1 086       6 0.11        77.8        0.30                1
 6  REACH 3 007   6   7 6600.0      2.50        1.16                1
 6 RUNOFF 1 088       5 0.43        82.4        0.64                1
 6 ADDHYD 4 108   7 5 6                                            1
 6 ADDHYD 4 109   6 2 7                                            1
 6  REACH 3 009   7   6 6500.0      1.30        1.26                1
 6 RUNOFF 1 010       7 0.27        82.50       0.69                1
 6 ADDHYD 4 110   7 6 5                                            1
 6 RUNOFF 1 012       6 0.26        77.6        0.68                1
 6 ADDHYD 4 112   6 5 7                                            1
 6 RUNOFF 1 014       6 0.36        84.5        0.25                1
 6 ADDHYD 4 114   7 6 5                                            1
 6  REACH 3 015   5   2 2650.0      0.89        1.19                1
 6 RUNOFF 1 098       6 0.09        74.9        0.45                1
 6  REACH 3 099   6   7 7500.0      1.85        1.36                1
 6 RUNOFF 1 100       5 0.30        82.0        0.76                1
 6 ADDHYD 4 200   7 5 6                                            1
 6 ADDHYD 4 121   2 6 7                                            1
 6 RUNOFF 1 022       5 0.29        83.6        0.31                1
 6 ADDHYD 4 122   5 7 6                                            1
 6 RUNOFF 1 006       2 0.32        78.2        0.75                1
 6 RUNOFF 1 016       7 0.16        74.9        0.58                1
```

```
6 ADDHYD 4 116   2 7 5                                          1
6  REACH 3 017   5   7 5500.0      1.85        1.36             1
6 RUNOFF 1 018       5 0.15        77.8        0.59             1
6 ADDHYD 4 118   5 7 2                                          1
6  REACH 3 019   2   5 7500.0      1.85        1.36             1
6 RUNOFF 1 020       7 0.20        83.4        0.60             1
6 ADDHYD 4 120   5 7 2                                          1
6 ADDHYD 4 124   2 6 7                                          1
6  REACH 3 023   7   2 3100.0      0.89        1.19             1
6 RUNOFF 1 024       5 0.23        82.1        0.67             1
6  REACH 3 025   5   6 4900.0      2.5         1.16             1
6 RUNOFF 1 026       5 0.21        84.0        0.47             1
6 ADDHYD 4 126   5 6 7                                          1
6 ADDHYD 4 127   7 2 3                                          1
6 RUNOFF 1 030       7 0.04        71.9        0.33             1
6 ADDHYD 4 131   3 7 5                                          1
6 RUNOFF 1 048       2 0.80        87.1        0.60             1
6  REACH 3 047   2   3 2900.0      0.51        1.51             1
6 RUNOFF 1 046       2 0.82        85.8        0.83             1
6 ADDHYD 4 001   2 3 4                                          1
6  REACH 3 043   4   2 2400.0      0.51        1.51             1
6 RUNOFF 1 042       3 0.90        83.9        0.78             1
6 ADDHYD 4 002   2 3 4                                          1
6  REACH 3 039   4   2 2500.0      0.51        1.51             1
6 RUNOFF 1 038       3 1.34        83.0        0.92             1
6 ADDHYD 4 003   2 3 4                                          1
6 RUNOFF 1 028       2 0.65        83.0        0.70             1
6 ADDHYD 4 129   2 4 3                                          1
6  REACH 3 029   3   2 1500.0      0.51        1.51             1
6 ADDHYD 4 132   2 5 4                                          1
6  REACH 3 031   4   2 4500.0      0.89        1.19             1
6 RUNOFF 1 032       5 0.56        80.2        0.41             1
6  REACH 3 033   5   6 8500.0      1.46        1.26             1
6 RUNOFF 1 034       5 0.93        79.4        0.87             1
6 ADDHYD 4 134   6 5 4                                          1
6  REACH 3 035   4   3 8400.0      1.46        1.26             1
6 RUNOFF 1 036       6 0.89        82.3        0.79             1
6 ADDHYD 4 136   3 6 4                                          1
6 ADDHYD 4 137   4 2 7                                          1
6 RUNOFF 1 040       4 0.23        82.0        0.60             1
6 ADDHYD 4 141   7 4 2                                          1
6 RUNOFF 1 044       7 0.16        82.0        0.57             1
6 ADDHYD 4 145   7 2 3                                          1
6 RUNOFF 1 050       4 0.94        82.9        0.48             1
6  REACH 3 051   4   6 9200.0      2.10        1.16             1
6 RUNOFF 1 052       5 0.45        82.0        0.83             1
```

```
6 ADDHYD 4 152   5 6 7                                                  1
6 ADDHYD 4 153   3 7 4                                                  1
6 RUNOFF 1 054       5 1.33        78.1        0.82                     1
6  REACH 3 055   5   6 6500.0      2.20        1.16                     1
6 RUNOFF 1 056       5 0.76        80.4        0.99                     1
6 ADDHYD 4 156   5 6 7                                                  1
6  REACH 3 057   7   6 9500.0      0.64        1.38                     1
6 RUNOFF 1 058       5 0.41        81.0        0.96                     1
6 ADDHYD 4 158   6 5 7                                                  1
6 ADDHYD 4 159   4 7 5                                                  1
6  REACH 3 059   5   2 5200.0      0.89        1.19                     1
6 RUNOFF 1 060       5 0.73        78.4        0.65                     1
6  REACH 3 061   5   6 7000.0      1.46        1.26                     1
6 RUNOFF 1 062       5 0.89        80.0        0.73                     1
6 ADDHYD 4 162   5 6 7                                                  1
6  REACH 3 063   7   6 9000.0      1.46        1.26                     1
6 RUNOFF 1 064       5 1.35        80.1        1.08                     1
6 ADDHYD 4 164   5 6 3                                                  1
6 ADDHYD 4 165   3 2 7                                                  1
6 RUNOFF 1 066       5 0.44        78.2        0.54                     1
6  REACH 3 067   5   6 6500.0      0.64        1.38                     1
6 RUNOFF 1 068       5 0.78        80.4        0.63                     1
6 ADDHYD 4 168   5 6 4                                                  1
6 ADDHYD 4 169   4 7 3                                                  1
6  REACH 3 069   3   2 4000.0      0.89        1.19                     1
6 RUNOFF 1 070       5 0.71        79.4        0.77                     1
6  REACH 3 071   5   4 7700.0      1.26        1.46                     1
6 RUNOFF 1 072       5 1.00        80.1        0.73                     1
6 ADDHYD 4 172   5 4 7                                                  1
6  REACH 3 073   7   6 8200.0      1.26        1.46                     1
6 RUNOFF 1 074       5 1.00        82.4        0.84                     1
6 ADDHYD 4 174   5 6 7                                                  1
6 ADDHYD 4 175   7 2 4                                                  1
6 RUNOFF 1 076       5 1.85        83.2        1.02                     1
6  REACH 3 077   5   6 8000.0      0.75        1.38                     1
6 RUNOFF 1 078       5 0.39        78.5        0.58                     1
6 ADDHYD 4 178   5 6 3                                                  1
6  REACH 3 079   3   6 5800.0      1.20        1.38                     1
6 RUNOFF 1 080       5 0.27        77.7        0.50                     1
6 ADDHYD 4 180   5 6 3                                                  1
6 ADDHYD 4 181   3 4 7                                                  1
 ENDATA
7 INCREM 6           0.10
7 COMPUT 7 084   181   0.00        1.00        1.00        7 2  01  01
 ENDCMP 1
 ENDJOB 2
```

```
**********************80-80 LIST OF INPUT DATA (CONTINUED)*********************

******************************END OF 80-80 LIST*******************************

EXECUTIVE CONTROL OPERATION INCREM     MAIN TIME INCREMENT =   .10 HOURS                                    RECORD ID

EXECUTIVE CONTROL OPERATION COMPUT     FROM XSECTION  84  TO XSECTION 181                                   RECORD ID
       STARTING TIME =   .00    RAIN DEPTH =  1.00    RAIN DURATION=  1.00    RAIN TABLE NO.= 7    ANT. MOIST. COND= 2
       ALTERNATE NO.= 1         STORM NO.= 1    MAIN TIME INCREMENT =   .10 HOURS

    *** WARNING  REACH  47 ATT-KIN COEFF.(C) GREATER THAN 0.667, CONSIDER REDUCING MAIN TIME INCREMENT  ***

    *** WARNING  REACH  43 ATT-KIN COEFF.(C) GREATER THAN 0.667, CONSIDER REDUCING MAIN TIME INCREMENT  ***

    *** WARNING  REACH  39 ATT-KIN COEFF.(C) GREATER THAN 0.667, CONSIDER REDUCING MAIN TIME INCREMENT  ***

    *** WARNING  REACH  29 ATT-KIN COEFF.(C) GREATER THAN 0.667, CONSIDER REDUCING MAIN TIME INCREMENT  ***

EXECUTIVE CONTROL OPERATION ENDCMP     COMPUTATIONS COMPLETED FOR PASS   1                                  RECORD ID

EXECUTIVE CONTROL OPERATION ENDJOB                                                                          RECORD ID
```

SUMMARY TABLE 1 - SELECTED RESULTS OF STANDARD AND EXECUTIVE CONTROL INSTRUCTIONS IN THE ORDER PERFORMED
(A STAR(*) AFTER THE PEAK DISCHARGE TIME AND RATE (CFS) VALUES INDICATES A FLAT TOP HYDROGRAPH
A QUESTION MARK(?) INDICATES A HYDROGRAPH WITH PEAK AS LAST POINT.)

SECTION/ STRUCTURE ID	STANDARD CONTROL OPERATION	DRAINAGE AREA (SQ MI)	RAIN TABLE #	ANTEC MOIST COND	MAIN TIME INCREM (HR)	PRECIPITATION BEGIN (HR)	PRECIPITATION AMOUNT (IN)	PRECIPITATION DURATION (HR)	RUNOFF AMOUNT (IN)	PEAK DISCHARGE ELEVATION (FT)	PEAK DISCHARGE TIME (HR)	PEAK DISCHARGE RATE (CFS)	PEAK DISCHARGE RATE (CSM
ALTERNATE 1 STORM 1													
XSECTION 84	RUNOFF	.69	7	2	.10	.0	3.12	8.90	1.20	---	5.34	377.36	546.9
XSECTION 86	RUNOFF	.11	7	2	.10	.0	3.12	8.90	1.20	---	4.78	134.48	1222.6
XSECTION 7	REACH	.11	7	2	.10	.0	3.12	8.90	1.20	---	5.17	75.79	689.0
XSECTION 88	RUNOFF	.43	7	2	.10	.0	3.12	8.90	1.50	---	5.00	434.46	1010.4
XSECTION 108	ADDHYD	.54	7	2	.10	.0	3.12	8.90	1.44	---	5.03	501.64	929.0
XSECTION 109	ADDHYD	1.23	7	2	.10	.0	3.12	8.90	1.30	---	5.12	800.58	650.9
XSECTION 9	REACH	1.23	7	2	.10	.0	3.12	8.90	1.30	---	5.45	655.91	533.3
XSECTION 10	RUNOFF	.27	7	2	.10	.0	3.12	8.90	1.50	---	5.03	261.77	969.9
XSECTION 110	ADDHYD	1.50	7	2	.10	.0	3.12	8.90	1.34	---	5.33	810.30	540.2
XSECTION 12	RUNOFF	.26	7	2	.10	.0	3.12	8.90	1.19	---	5.04	198.04	761.7
XSECTION 112	ADDHYD	1.76	7	2	.10	.0	3.12	8.90	1.32	---	5.24	962.68	547.0
XSECTION 14	RUNOFF	.36	7	2	.10	.0	3.12	8.90	1.66	---	4.72	696.31	1934.2
XSECTION 114	ADDHYD	2.12	7	2	.10	.0	3.12	8.90	1.38	---	5.10	1101.83	519.7
XSECTION 15	REACH	2.12	7	2	.10	.0	3.12	8.90	1.37	---	5.37	1017.69	480.0
XSECTION 98	RUNOFF	.09	7	2	.10	.0	3.12	8.90	1.03	---	4.90	75.39	837.6
XSECTION 99	REACH	.09	7	2	.10	.0	3.12	8.90	1.03	---	5.18	51.38	570.9
XSECTION 100	RUNOFF	.30	7	2	.10	.0	3.12	8.90	1.47	---	5.09	264.66	882.2
XSECTION 200	ADDHYD	.39	7	2	.10	.0	3.12	8.90	1.37	---	5.10	314.51	806.4
XSECTION 121	ADDHYD	2.51	7	2	.10	.0	3.12	8.90	1.37	---	5.25	1283.86	511.5
XSECTION 22	RUNOFF	.29	7	2	.10	.0	3.12	8.90	1.59	---	4.77	467.91	1613.9
XSECTION 122	ADDHYD	2.80	7	2	.10	.0	3.12	8.90	1.40	---	5.13	1411.39	504.1
XSECTION 6	RUNOFF	.32	7	2	.10	.0	3.12	8.90	1.23	---	5.09	237.91	743.5
XSECTION 16	RUNOFF	.16	7	2	.10	.0	3.12	8.90	1.03	---	4.99	115.00	718.8
XSECTION 116	ADDHYD	.48	7	2	.10	.0	3.12	8.90	1.16	---	5.05	347.99	725.0
XSECTION 17	REACH	.48	7	2	.10	.0	3.12	8.90	1.16	---	5.35	317.18	660.8
XSECTION 18	RUNOFF	.15	7	2	.10	.0	3.12	8.90	1.20	---	4.99	125.96	839.7
XSECTION 118	ADDHYD	.63	7	2	.10	.0	3.12	8.90	1.17	---	5.29	389.83	618.8
XSECTION 19	REACH	.63	7	2	.10	.0	3.12	8.90	1.17	---	5.52	349.61	554.9
XSECTION 20	RUNOFF	.20	7	2	.10	.0	3.12	8.90	1.57	---	4.97	221.49	1107.5
XSECTION 120	ADDHYD	.83	7	2	.10	.0	3.12	8.90	1.27	---	5.39	433.02	521.7
XSECTION 124	ADDHYD	3.63	7	2	.10	.0	3.12	8.90	1.37	---	5.19	1810.44	498.7
XSECTION 23	REACH	3.63	7	2	.10	.0	3.12	8.90	1.37	---	5.52	1672.12	460.6

UMMARY TABLE 1 - SELECTED RESULTS OF STANDARD AND EXECUTIVE CONTROL INSTRUCTIONS IN THE ORDER PERFORMED
(A STAR(*) AFTER THE PEAK DISCHARGE TIME AND RATE (CFS) VALUES INDICATES A FLAT TOP HYDROGRAPH
A QUESTION MARK(?) INDICATES A HYDROGRAPH WITH PEAK AS LAST POINT.)

SECTION/ STRUCTURE ID	STANDARD CONTROL OPERATION	DRAINAGE AREA (SQ MI)	RAIN TABLE #	ANTEC MOIST COND	MAIN TIME INCREM (HR)	PRECIPITATION BEGIN (HR)	PRECIPITATION AMOUNT (IN)	PRECIPITATION DURATION (HR)	RUNOFF AMOUNT (IN)	PEAK DISCHARGE ELEVATION (FT)	PEAK DISCHARGE TIME (HR)	PEAK DISCHARGE RATE (CFS)	PEAK DISCHARGE RATE (CSM)
ALTERNATE 1 STORM 1													
XSECTION 24	RUNOFF	.23	7	2	.10	.0	3.12	8.90	1.48	---	5.02	224.82	977.5
XSECTION 25	REACH	.23	7	2	.10	.0	3.12	8.90	1.48	---	5.29	180.78	786.0
XSECTION 26	RUNOFF	.21	7	2	.10	.0	3.12	8.90	1.61	---	4.88	277.66	1322.2
XSECTION 126	ADDHYD	.44	7	2	.10	.0	3.12	8.90	1.55	---	4.98	365.78	831.3
XSECTION 127	ADDHYD	4.07	7	2	.10	.0	3.12	8.90	1.39	---	5.43	1891.46	464.7
XSECTION 30	RUNOFF	.04	7	2	.10	.0	3.12	8.90	.88	---	4.82	33.07	826.6
XSECTION 131	ADDHYD	4.11	7	2	.10	.0	3.12	8.90	1.38	---	5.42	1896.23	461.4
XSECTION 48	RUNOFF	.80	7	2	.10	.0	3.12	8.90	1.85	---	4.96	1048.30	1310.4
XSECTION 47	REACH	.80	7	2	.10	.0	3.12	8.90	1.85	---	5.09	1023.25	1279.1
XSECTION 46	RUNOFF	.82	7	2	.10	.0	3.12	8.90	1.75	---	5.12	821.62	1002.0
XSECTION 1	ADDHYD	1.62	7	2	.10	.0	3.12	8.90	1.80	---	5.10	1842.70	1137.5
XSECTION 43	REACH	1.62	7	2	.10	.0	3.12	8.90	1.80	---	5.21	1838.26	1134.7
XSECTION 42	RUNOFF	.90	7	2	.10	.0	3.12	8.90	1.61	---	5.09	864.49	960.5
XSECTION 2	ADDHYD	2.52	7	2	.10	.0	3.12	8.90	1.73	---	5.17	2666.05	1058.0
XSECTION 39	REACH	2.52	7	2	.10	.0	3.12	8.90	1.73	---	5.27	2665.94	1057.9
XSECTION 38	RUNOFF	1.34	7	2	.10	.0	3.12	8.90	1.54	---	5.19	1097.46	819.0
XSECTION 3	ADDHYD	3.86	7	2	.10	.0	3.12	8.90	1.67	---	5.26	3740.96	969.2
XSECTION 28	RUNOFF	.65	7	2	.10	.0	3.12	8.90	1.54	---	5.04	637.93	981.4
XSECTION 129	ADDHYD	4.51	7	2	.10	.0	3.12	8.90	1.65	---	5.23	4272.15	947.3
XSECTION 29	REACH	4.51	7	2	.10	.0	3.12	8.90	1.65	---	5.23	4272.15	947.3
XSECTION 132	ADDHYD	8.62	7	2	.10	.0	3.12	8.90	1.52	---	5.25	6085.98	706.0
XSECTION 31	REACH	8.62	7	2	.10	.0	3.12	8.90	1.52	---	5.56	5085.49	590.0
XSECTION 32	RUNOFF	.56	7	2	.10	.0	3.12	8.90	1.35	---	4.84	667.60	1192.1
XSECTION 33	REACH	.56	7	2	.10	.0	3.12	8.90	1.35	---	5.25	413.17	737.8
XSECTION 34	RUNOFF	.93	7	2	.10	.0	3.12	8.90	1.30	---	5.18	656.35	705.8
XSECTION 134	ADDHYD	1.49	7	2	.10	.0	3.12	8.90	1.32	---	5.21	1064.86	714.7
XSECTION 35	REACH	1.49	7	2	.10	.0	3.12	8.90	1.32	---	5.53	835.53	560.8
XSECTION 36	RUNOFF	.89	7	2	.10	.0	3.12	8.90	1.49	---	5.11	776.71	872.7
XSECTION 136	ADDHYD	2.38	7	2	.10	.0	3.12	8.90	1.38	---	5.31	1378.82	579.3
XSECTION 137	ADDHYD	11.00	7	2	.10	.0	3.12	8.90	1.49	---	5.52	6341.91	576.5
XSECTION 40	RUNOFF	.23	7	2	.10	.0	3.12	8.90	1.47	---	4.98	238.00	1034.8
XSECTION 141	ADDHYD	11.23	7	2	.10	.0	3.12	8.90	1.49	---	5.51	6418.88	571.6
XSECTION 44	RUNOFF	.16	7	2	.10	.0	3.12	8.90	1.47	---	4.96	170.79	1067.5
XSECTION 145	ADDHYD	11.39	7	2	.10	.0	3.12	8.90	1.49	---	5.51	6469.33	568.0
XSECTION 50	RUNOFF	.94	7	2	.10	.0	3.12	8.90	1.54	---	4.89	1163.04	1237.3
XSECTION 51	REACH	.94	7	2	.10	.0	3.12	8.90	1.54	---	5.42	701.71	746.5

SUMMARY TABLE 1 - SELECTED RESULTS OF STANDARD AND EXECUTIVE CONTROL INSTRUCTIONS IN THE ORDER PERFORMED
(A STAR(*) AFTER THE PEAK DISCHARGE TIME AND RATE (CFS) VALUES INDICATES A FLAT TOP HYDROGRAPH
A QUESTION MARK(?) INDICATES A HYDROGRAPH WITH PEAK AS LAST POINT.)

SECTION/ STRUCTURE ID	STANDARD CONTROL OPERATION	DRAINAGE AREA (SQ MI)	RAIN TABLE #	ANTEC MOIST COND	MAIN TIME INCREM (HR)	PRECIPITATION BEGIN (HR)	PRECIPITATION AMOUNT (IN)	PRECIPITATION DURATION (HR)	RUNOFF AMOUNT (IN)	PEAK DISCHARGE ELEVATION (FT)	PEAK DISCHARGE TIME (HR)	PEAK DISCHARGE RATE (CFS)	PEAK DISCHARGE RATE (CSM
ALTERNATE 1 STORM 1													
XSECTION 52	RUNOFF	.45	7	2	.10	.0	3.12	8.90	1.47	---	5.14	376.18	836.
XSECTION 152	ADDHYD	1.39	7	2	.10	.0	3.12	8.90	1.52	---	5.33	1008.51	725.
XSECTION 153	ADDHYD	12.78	7	2	.10	.0	3.12	8.90	1.49	---	5.48	7401.32	579.
XSECTION 54	RUNOFF	1.33	7	2	.10	.0	3.12	8.90	1.22	---	5.14	908.87	683.
XSECTION 55	REACH	1.33	7	2	.10	.0	3.12	8.90	1.22	---	5.44	720.69	541.
XSECTION 56	RUNOFF	.76	7	2	.10	.0	3.12	8.90	1.37	---	5.26	516.63	679.
XSECTION 156	ADDHYD	2.09	7	2	.10	.0	3.12	8.90	1.27	---	5.36	1206.78	577.
XSECTION 57	REACH	2.09	7	2	.10	.0	3.12	8.90	1.27	---	5.83	958.85	458.
XSECTION 58	RUNOFF	.41	7	2	.10	.0	3.12	8.90	1.40	---	5.23	292.82	714.
XSECTION 158	ADDHYD	2.50	7	2	.10	.0	3.12	8.90	1.29	---	5.75	1098.24	439.
XSECTION 159	ADDHYD	15.28	7	2	.10	.0	3.12	8.90	1.46	---	5.51	8388.13	549.
XSECTION 59	REACH	15.28	7	2	.10	.0	3.12	8.90	1.46	---	5.86	7293.04	477.
XSECTION 60	RUNOFF	.73	7	2	.10	.0	3.12	8.90	1.24	---	5.03	595.40	815.
XSECTION 61	REACH	.73	7	2	.10	.0	3.12	8.90	1.24	---	5.32	448.67	614.
XSECTION 62	RUNOFF	.89	7	2	.10	.0	3.12	8.90	1.34	---	5.07	728.83	818.
XSECTION 162	ADDHYD	1.62	7	2	.10	.0	3.12	8.90	1.29	---	5.16	1108.94	684.
XSECTION 63	REACH	1.62	7	2	.10	.0	3.12	8.90	1.29	---	5.60	857.07	529.
XSECTION 64	RUNOFF	1.35	7	2	.10	.0	3.12	8.90	1.35	---	5.32	841.69	623.
XSECTION 164	ADDHYD	2.97	7	2	.10	.0	3.12	8.90	1.32	---	5.46	1618.59	545.
XSECTION 165	ADDHYD	18.25	7	2	.10	.0	3.12	8.90	1.44	---	5.79	8559.78	469.
XSECTION 66	RUNOFF	.44	7	2	.10	.0	3.12	8.90	1.23	---	4.94	401.64	912.
XSECTION 67	REACH	.44	7	2	.10	.0	3.12	8.90	1.23	---	5.25	272.83	620.
XSECTION 68	RUNOFF	.78	7	2	.10	.0	3.12	8.90	1.36	---	5.00	720.55	923.
XSECTION 168	ADDHYD	1.22	7	2	.10	.0	3.12	8.90	1.31	---	5.06	935.76	767.
XSECTION 169	ADDHYD	19.47	7	2	.10	.0	3.12	8.90	1.43	---	5.77	8843.97	454.
XSECTION 69	REACH	19.47	7	2	.10	.0	3.12	8.90	1.43	---	6.06	8301.96	426.
XSECTION 70	RUNOFF	.71	7	2	.10	.0	3.12	8.90	1.30	---	5.10	545.25	768.
XSECTION 71	REACH	.71	7	2	.10	.0	3.12	8.90	1.30	---	5.31	491.64	692.
XSECTION 72	RUNOFF	1.00	7	2	.10	.0	3.12	8.90	1.35	---	5.07	823.19	823.
XSECTION 172	ADDHYD	1.71	7	2	.10	.0	3.12	8.90	1.33	---	5.16	1236.53	723.1
XSECTION 73	REACH	1.71	7	2	.10	.0	3.12	8.90	1.33	---	5.35	1160.27	678.
XSECTION 74	RUNOFF	1.00	7	2	.10	.0	3.12	8.90	1.50	---	5.15	843.66	843.7
XSECTION 174	ADDHYD	2.71	7	2	.10	.0	3.12	8.90	1.39	---	5.27	1928.19	711.
XSECTION 175	ADDHYD	22.18	7	2	.10	.0	3.12	8.90	1.42	---	5.99	8943.18	403.
XSECTION 76	RUNOFF	1.85	7	2	.10	.0	3.12	8.90	1.56	---	5.27	1407.65	760.
XSECTION 77	REACH	1.85	7	2	.10	.0	3.12	8.90	1.56	---	5.56	1208.30	653.1

JMMARY TABLE 1 - SELECTED RESULTS OF STANDARD AND EXECUTIVE CONTROL INSTRUCTIONS IN THE ORDER PERFORMED
(A STAR(*) AFTER THE PEAK DISCHARGE TIME AND RATE (CFS) VALUES INDICATES A FLAT TOP HIDROGRAPH
A QUESTION MARK(?) INDICATES A HYDROGRAPH WITH PEAK AS LAST POINT.)

SECTION/ STRUCTURE ID	STANDARD CONTROL OPERATION	DRAINAGE AREA (SQ MI)	RAIN TABLE #	ANTEC MOIST COND	MAIN TIME INCREM (HR)	PRECIPITATION BEGIN (HR)	PRECIPITATION AMOUNT (IN)	PRECIPITATION DURATION (HR)	RUNOFF AMOUNT (IN)	PEAK DISCHARGE ELEVATION (FT)	PEAK DISCHARGE TIME (HR)	PEAK DISCHARGE RATE (CFS)	PEAK DISCHARGE RATE (CSM)
ALTERNATE 1 STORM 1													
XSECTION 78	RUNOFF	.39	7	2	.10	.0	3.12	8.90	1.25	---	4.98	343.72	881.3
XSECTION 178	ADDHYD	2.24	7	2	.10	.0	3.12	8.90	1.50	---	5.50	1313.91	586.6
XSECTION 79	REACH	2.24	7	2	.10	.0	3.12	8.90	1.50	---	5.69	1274.60	569.0
XSECTION 80	RUNOFF	.27	7	2	.10	.0	3.12	8.90	1.20	---	4.92	249.38	923.6
XSECTION 180	ADDHYD	2.51	7	2	.10	.0	3.12	8.90	1.47	---	5.67	1312.03	522.7
XSECTION 181	ADDHYD	24.69	7	2	.10	.0	3.12	8.90	1.43	---	5.93	10036.74	408.9

APPENDIX VII

INDIAN BEND WASH
TR-20
PROPOSED CONDITIONS - 100-YEAR STORM

```
******************80-80 LIST OF INPUT DATA FOR TR-20 HYDROLOGY******************

JOB TR-20
TITLE     SQUAW PEAK PARKWAY      PROPOSED ALLIGNMENT
TITLE     HEC-1 HYPOTHETICAL 100-YEAR RAIN (DA=0.01)
 5 RAINFL 7            0.1
 8          0.00        0.00        0.00        0.01        0.02
 8          0.03        0.04        0.05        0.06        0.07
 8          0.08        0.09        0.10        0.11        0.12
 8          0.13        0.14        0.15        0.16        0.17
 8          0.18        0.19        0.20        0.21        0.22
 8          0.23        0.24        0.25        0.26        0.27
 8          0.28        0.29        0.30        0.31        0.33
 8          0.35        0.37        0.39        0.41        0.44
 8          0.47        0.56        0.67        0.80        1.02
 8          1.47        2.29        2.58        2.77        2.89
 8          2.99        3.02        3.05        3.07        3.09
 8          3.11        3.13        3.15        3.17        3.18
 8          3.19        3.20        3.21        3.22        3.23
 8          3.24        3.25        3.26        3.27        3.28
 8          3.29        3.30        3.31        3.32        3.33
 8          3.34        3.35        3.36        3.37        3.38
 8          3.39        3.40        3.41        3.42        3.43
 8          3.44        3.45        3.46        3.47        3.48
 9 ENDTBL
 6 RUNOFF 1 084       2 0.69        77.7        1.09                1
 6 RUNOFF 1 086       6 0.11        77.8        0.30                1
 6  REACH 3 007   6   7 6600.0      2.50        1.16                1
 6 RUNOFF 1 088       5 0.43        82.4        0.64                1
 6 ADDHYD 4 108   7 5 6                                            1
 6 ADDHYD 4 109   6 2 7                                            1
 6  REACH 3 009   7   6 6500.0      1.30        1.26                1
 6 RUNOFF 1 010       7 0.27        82.50       0.69                1
 6 ADDHYD 4 110   7 6 5                                            1
 6 RUNOFF 1 012       6 0.26        77.6        0.68                1
 6 ADDHYD 4 112   6 5 7                                            1
 6 RUNOFF 1 014       6 0.36        84.5        0.25                1
 6 ADDHYD 4 114   7 6 5                                            1
 6  REACH 3 015   5   2 2650.0      0.89        1.19                1
 6 RUNOFF 1 098       6 0.09        74.9        0.45                1
 6  REACH 3 099   6   7 7500.0      1.85        1.36                1
 6 RUNOFF 1 100       5 0.30        82.0        0.76                1
 6 ADDHYD 4 200   7 5 6                                            1
 6 ADDHYD 4 121   2 6 7                                            1
 6 RUNOFF 1 022       5 0.29        83.6        0.31                1
 6 ADDHYD 4 122   5 7 6                                            1
 6 RUNOFF 1 006       2 0.32        78.2        0.75                1
 6 RUNOFF 1 016       7 0.16        74.9        0.58                1
```

**********80-80 LIST OF INPUT DATA (CONTINUED)**********

```
6 ADDHYD 4 116   2 7 5                                          1
6  REACH 3 017   5   7 5500.0      1.85        1.36             1
6 RUNOFF 1 018       5 0.15        77.8        0.59             1
6 ADDHYD 4 118   5 7 2                                          1
6  REACH 3 019   2   5 7500.0      1.85        1.36             1
6 RUNOFF 1 020       7 0.20        83.4        0.60             1
6 ADDHYD 4 120   5 7 2                                          1
6 ADDHYD 4 124   2 6 7                                          1
6  REACH 3 023   7   2 3100.0      0.89        1.19             1
6 RUNOFF 1 024       5 0.23        82.1        0.67             1
6  REACH 3 025   5   6 4900.0      2.5         1.16             1
6 RUNOFF 1 026       5 0.21        84.0        0.47             1
6 ADDHYD 4 126   5 6 7                                          1
6 ADDHYD 4 127   7 2 3                                          1
6 RUNOFF 1 030       7 0.04        71.9        0.33             1
6 ADDHYD 4 131   3 7 5                                          1
6 RUNOFF 1 048       2 0.80        87.1        0.60             1
6  REACH 3 047   2   3 2900.0      0.51        1.51             1
6 RUNOFF 1 046       2 0.82        85.8        0.83             1
6 ADDHYD 4 001   2 3 4                                          1
6  REACH 3 043   4   2 2400.0      0.51        1.51             1
6 RUNOFF 1 042       3 0.90        83.9        0.78             1
6 ADDHYD 4 002   2 3 4                                          1
6  REACH 3 039   4   2 2500.0      0.51        1.51             1
6 RUNOFF 1 038       3 1.34        83.0        0.92             1
6 ADDHYD 4 003   2 3 4                                          1
6 RUNOFF 1 028       2 0.65        83.0        0.70             1
6 ADDHYD 4 129   2 4 3                                          1
6  REACH 3 029   3   2 1500.0      0.51        1.51             1
6 ADDHYD 4 132   2 5 4                                          1
6  REACH 3 031   4   2 4500.0      0.89        1.19             1
6 RUNOFF 1 032       5 0.56        80.2        0.41             1
6  REACH 3 033   5   6 8500.0      1.46        1.26             1
6 RUNOFF 1 034       5 0.93        79.4        0.87             1
6 ADDHYD 4 134   6 5 4                                          1
6  REACH 3 035   4   3 8400.0      1.46        1.26             1
6 RUNOFF 1 036       6 0.89        82.3        0.79             1
6 ADDHYD 4 136   3 6 4                                          1
6 ADDHYD 4 137   4 2 7                                          1
6 RUNOFF 1 040       4 0.23        82.0        0.60             1
6 ADDHYD 4 141   7 4 2                                          1
6 RUNOFF 1 044       7 0.16        82.0        0.57             1
6 ADDHYD 4 145   7 2 3                                          1
6 RUNOFF 1 050       4 0.94        82.9        0.48             1
6  REACH 3 051   4   6 9200.0      2.10        1.16             1
6 RUNOFF 1 052       5 0.45        82.0        0.83             1
```

```
6 ADDHYD 4 152   5 6 7                                          1
6 ADDHYD 4 153   3 7 4                                          1
6 RUNOFF 1 054       5 1.33       78.1       0.82               1
6  REACH 3 055   5   6 6500.0     2.20       1.16               1
6 RUNOFF 1 056       5 0.76       80.4       0.99               1
6 ADDHYD 4 156   5 6 7                                          1
6  REACH 3 057   7   6 9500.0     0.64       1.38               1
6 RUNOFF 1 058       5 0.41       81.0       0.96               1
6 ADDHYD 4 158   6 5 7                                          1
6 ADDHYD 4 159   4 7 5                                          1
6  REACH 3 059   5   2 5200.0     0.89       1.19               1
6 RUNOFF 1 060       5 0.73       78.4       0.65               1
6  REACH 3 061   5   6 7000.0     1.46       1.26               1
6 RUNOFF 1 062       5 0.89       80.0       0.73               1
6 ADDHYD 4 162   5 6 7                                          1
6  REACH 3 063   7   6 9000.0     1.46       1.26               1
6 RUNOFF 1 064       5 1.35       80.1       1.08               1
6 ADDHYD 4 164   5 6 3                                          1
6 ADDHYD 4 165   3 2 7                                          1
6 RUNOFF 1 066       5 0.44       78.2       0.54               1
6  REACH 3 067   5   6 6500.0     0.64       1.38               1
6 RUNOFF 1 068       5 0.78       80.4       0.63               1
6 ADDHYD 4 168   5 6 4                                          1
6 ADDHYD 4 169   4 7 3                                          1
6  REACH 3 069   3   2 4000.0     0.89       1.19               1
6 RUNOFF 1 070       5 0.71       79.4       0.77               1
6  REACH 3 071   5   4 7700.0     1.26       1.46               1
6 RUNOFF 1 072       5 1.00       80.1       0.73               1
6 ADDHYD 4 172   5 4 7                                          1
6  REACH 3 073   7   6 8200.0     1.26       1.46               1
6 RUNOFF 1 074       5 1.00       82.4       0.84               1
6 ADDHYD 4 174   5 6 7                                          1
6 ADDHYD 4 175   7 2 4                                          1
6 RUNOFF 1 076       5 1.85       83.2       1.02               1
6  REACH 3 077   5   6 8000.0     0.75       1.38               1
6 RUNOFF 1 078       5 0.39       78.5       0.58               1
6 ADDHYD 4 178   5 6 3                                          1
6  REACH 3 079   3   6 5800.0     1.20       1.38               1
6 RUNOFF 1 080       5 0.27       77.7       0.50               1
6 ADDHYD 4 180   5 6 3                                          1
6 ADDHYD 4 181   3 4 7                                          1
  ENDATA
7 INCREM 6           0.10
7 COMPUT 7 084   181   0.00       1.00       1.00       7 2  01  01
  ENDCMP 1
  ENDJOB 2
```

```
*********************80-80 LIST OF INPUT DATA (CONTINUED)********************

******************************END OF 80-80 LIST******************************

EXECUTIVE CONTROL OPERATION INCREM     MAIN TIME INCREMENT =   .10 HOURS                                    RECORD ID

EXECUTIVE CONTROL OPERATION COMPUT     FROM XSECTION  84  TO XSECTION 181                                   RECORD ID
       STARTING TIME =   .00    RAIN DEPTH =  1.00    RAIN DURATION=  1.00    RAIN TABLE NO.= 7    ANT. MOIST. COND= 2
       ALTERNATE NO.= 1         STORM NO.= 1    MAIN TIME INCREMENT =   .10 HOURS

    *** WARNING  REACH  47 ATT-KIN COEFF.(C) GREATER THAN 0.667, CONSIDER REDUCING MAIN TIME INCREMENT  ***

    *** WARNING  REACH  43 ATT-KIN COEFF.(C) GREATER THAN 0.667, CONSIDER REDUCING MAIN TIME INCREMENT  ***

    *** WARNING  REACH  39 ATT-KIN COEFF.(C) GREATER THAN 0.667, CONSIDER REDUCING MAIN TIME INCREMENT  ***

    *** WARNING  REACH  29 ATT-KIN COEFF.(C) GREATER THAN 0.667, CONSIDER REDUCING MAIN TIME INCREMENT  ***

EXECUTIVE CONTROL OPERATION ENDCMP     COMPUTATIONS COMPLETED FOR PASS   1                                  RECORD ID

EXECUTIVE CONTROL OPERATION ENDJOB                                                                          RECORD ID
```

SUMMARY TABLE 1 - SELECTED RESULTS OF STANDARD AND EXECUTIVE CONTROL INSTRUCTIONS IN THE ORDER PERFORMED
(A STAR(*) AFTER THE PEAK DISCHARGE TIME AND RATE (CFS) VALUES INDICATES A FLAT TOP HYDROGRAPH
A QUESTION MARK(?) INDICATES A HYDROGRAPH WITH PEAK AS LAST POINT.)

SECTION/ STRUCTURE ID	STANDARD CONTROL OPERATION	DRAINAGE AREA (SQ MI)	RAIN TABLE #	ANTEC MOIST COND	MAIN TIME INCREM (HR)	PRECIPITATION BEGIN (HR)	PRECIPITATION AMOUNT (IN)	PRECIPITATION DURATION (HR)	RUNOFF AMOUNT (IN)	PEAK DISCHARGE ELEVATION (FT)	PEAK DISCHARGE TIME (HR)	PEAK DISCHARGE RATE (CFS)	PEAK DISCHARGE RATE (CSM)
ALTERNATE 1 STORM 1													
XSECTION 84	RUNOFF	.69	7	2	.10	.0	3.48	8.90	1.46	---	5.33	468.70	679.3
XSECTION 86	RUNOFF	.11	7	2	.10	.0	3.48	8.90	1.47	---	4.77	167.03	1518.4
XSECTION 7	REACH	.11	7	2	.10	.0	3.48	8.90	1.47	---	5.25	96.20	874.6
XSECTION 88	RUNOFF	.43	7	2	.10	.0	3.48	8.90	1.79	---	4.99	525.81	1222.8
XSECTION 108	ADDHYD	.54	7	2	.10	.0	3.48	8.90	1.73	---	5.04	588.32	1089.5
XSECTION 109	ADDHYD	1.23	7	2	.10	.0	3.48	8.90	1.58	---	5.13	977.18	794.5
XSECTION 9	REACH	1.23	7	2	.10	.0	3.48	8.90	1.58	---	5.45	811.97	660.1
XSECTION 10	RUNOFF	.27	7	2	.10	.0	3.48	8.90	1.80	---	5.02	316.77	1173.2
XSECTION 110	ADDHYD	1.50	7	2	.10	.0	3.48	8.90	1.62	---	5.33	994.83	663.2
XSECTION 12	RUNOFF	.26	7	2	.10	.0	3.48	8.90	1.46	---	5.04	246.24	947.1
XSECTION 112	ADDHYD	1.76	7	2	.10	.0	3.48	8.90	1.59	---	5.24	1179.92	670.4
XSECTION 14	RUNOFF	.36	7	2	.10	.0	3.48	8.90	1.97	---	4.72	833.76	2316.0
XSECTION 114	ADDHYD	2.12	7	2	.10	.0	3.48	8.90	1.66	---	5.10	1338.42	631.3
XSECTION 15	REACH	2.12	7	2	.10	.0	3.48	8.90	1.66	---	5.36	1247.55	588.5
XSECTION 98	RUNOFF	.09	7	2	.10	.0	3.48	8.90	1.28	---	4.89	95.46	1060.7
XSECTION 99	REACH	.09	7	2	.10	.0	3.48	8.90	1.28	---	5.16	66.55	739.4
XSECTION 100	RUNOFF	.30	7	2	.10	.0	3.48	8.90	1.76	---	5.08	320.83	1069.4
XSECTION 200	ADDHYD	.39	7	2	.10	.0	3.48	8.90	1.65	---	5.09	385.96	989.6
XSECTION 121	ADDHYD	2.51	7	2	.10	.0	3.48	8.90	1.66	---	5.24	1574.67	627.4
XSECTION 22	RUNOFF	.29	7	2	.10	.0	3.48	8.90	1.89	---	4.77	562.38	1939.2
XSECTION 122	ADDHYD	2.80	7	2	.10	.0	3.48	8.90	1.68	---	5.12	1726.15	616.5
XSECTION 6	RUNOFF	.32	7	2	.10	.0	3.48	8.90	1.49	---	5.08	294.67	920.8
XSECTION 16	RUNOFF	.16	7	2	.10	.0	3.48	8.90	1.28	---	4.98	145.39	908.7
XSECTION 116	ADDHYD	.48	7	2	.10	.0	3.48	8.90	1.42	---	5.04	435.45	907.2
XSECTION 17	REACH	.48	7	2	.10	.0	3.48	8.90	1.42	---	5.23	399.26	831.8
XSECTION 18	RUNOFF	.15	7	2	.10	.0	3.48	8.90	1.47	---	4.98	156.40	1042.7
XSECTION 118	ADDHYD	.63	7	2	.10	.0	3.48	8.90	1.43	---	5.17	516.29	819.5
XSECTION 19	REACH	.63	7	2	.10	.0	3.48	8.90	1.43	---	5.40	462.62	734.3
XSECTION 20	RUNOFF	.20	7	2	.10	.0	3.48	8.90	1.87	---	4.96	266.70	1333.5
XSECTION 120	ADDHYD	.83	7	2	.10	.0	3.48	8.90	1.54	---	5.27	601.18	724.3
XSECTION 124	ADDHYD	3.63	7	2	.10	.0	3.48	8.90	1.65	---	5.18	2306.31	635.3
XSECTION 23	REACH	3.63	7	2	.10	.0	3.48	8.90	1.65	---	5.48	2121.43	584.4

SUMMARY TABLE 1 - SELECTED RESULTS OF STANDARD AND EXECUTIVE CONTROL INSTRUCTIONS IN THE ORDER PERFORMED
(A STAR(*) AFTER THE PEAK DISCHARGE TIME AND RATE (CFS) VALUES INDICATES A FLAT TOP HYDROGRAPH
A QUESTION MARK(?) INDICATES A HYDROGRAPH WITH PEAK AS LAST POINT.)

SECTION/ STRUCTURE ID	STANDARD CONTROL OPERATION	DRAINAGE AREA (SQ MI)	RAIN TABLE #	ANTEC MOIST COND	MAIN TIME INCREM (HR)	PRECIPITATION BEGIN (HR)	PRECIPITATION AMOUNT (IN)	PRECIPITATION DURATION (HR)	RUNOFF AMOUNT (IN)	PEAK DISCHARGE ELEVATION (FT)	PEAK DISCHARGE TIME (HR)	PEAK DISCHARGE RATE (CFS)	PEAK DISCHARGE RATE (CSM)
ALTERNATE 1 STORM 1													
XSECTION 24	RUNOFF	.23	7	2	.10	.0	3.48	8.90	1.78	---	5.02	272.49	1184.7
XSECTION 25	REACH	.23	7	2	.10	.0	3.48	8.90	1.78	---	5.27	220.79	960.0
XSECTION 26	RUNOFF	.21	7	2	.10	.0	3.48	8.90	1.92	---	4.88	333.19	1586.6
XSECTION 126	ADDHYD	.44	7	2	.10	.0	3.48	8.90	1.84	---	4.97	443.76	1008.5
XSECTION 127	ADDHYD	4.07	7	2	.10	.0	3.48	8.90	1.67	---	5.40	2397.88	589.2
XSECTION 30	RUNOFF	.04	7	2	.10	.0	3.48	8.90	1.10	---	4.81	42.85	1071.2
XSECTION 131	ADDHYD	4.11	7	2	.10	.0	3.48	8.90	1.66	---	5.40	2404.25	585.0
XSECTION 48	RUNOFF	.80	7	2	.10	.0	3.48	8.90	2.17	---	4.95	1239.31	1549.1
XSECTION 47	REACH	.80	7	2	.10	.0	3.48	8.90	2.17	---	5.08	1214.27	1517.8
XSECTION 46	RUNOFF	.82	7	2	.10	.0	3.48	8.90	2.06	---	5.11	977.40	1192.0
XSECTION 1	ADDHYD	1.62	7	2	.10	.0	3.48	8.90	2.12	---	5.09	2188.53	1350.9
XSECTION 43	REACH	1.62	7	2	.10	.0	3.48	8.90	2.12	---	5.19	2186.98	1350.0
XSECTION 42	RUNOFF	.90	7	2	.10	.0	3.48	8.90	1.91	---	5.08	1037.68	1153.0
XSECTION 2	ADDHYD	2.52	7	2	.10	.0	3.48	8.90	2.04	---	5.16	3183.88	1263.4
XSECTION 39	REACH	2.52	7	2	.10	.0	3.48	8.90	2.04	---	5.16	3183.88	1263.4
XSECTION 38	RUNOFF	1.34	7	2	.10	.0	3.48	8.90	1.84	---	5.18	1324.35	988.3
XSECTION 3	ADDHYD	3.86	7	2	.10	.0	3.48	8.90	1.97	---	5.17	4506.92	1167.6
XSECTION 28	RUNOFF	.65	7	2	.10	.0	3.48	8.90	1.84	---	5.03	769.71	1184.2
XSECTION 129	ADDHYD	4.51	7	2	.10	.0	3.48	8.90	1.95	---	5.15	5227.79	1159.2
XSECTION 29	REACH	4.51	7	2	.10	.0	3.48	8.90	1.95	---	5.15	5227.79	1159.2
XSECTION 132	ADDHYD	8.62	7	2	.10	.0	3.48	8.90	1.81	---	5.19	7428.77	861.8
XSECTION 31	REACH	8.62	7	2	.10	.0	3.48	8.90	1.81	---	5.49	6216.23	721.1
XSECTION 32	RUNOFF	.56	7	2	.10	.0	3.48	8.90	1.64	---	4.84	819.02	1462.5
XSECTION 33	REACH	.56	7	2	.10	.0	3.48	8.90	1.63	---	5.23	516.39	922.1
XSECTION 34	RUNOFF	.93	7	2	.10	.0	3.48	8.90	1.58	---	5.17	806.92	867.7
XSECTION 134	ADDHYD	1.49	7	2	.10	.0	3.48	8.90	1.60	---	5.20	1318.34	884.8
XSECTION 35	REACH	1.49	7	2	.10	.0	3.48	8.90	1.60	---	5.51	1046.87	702.6
XSECTION 36	RUNOFF	.89	7	2	.10	.0	3.48	8.90	1.78	---	5.10	940.20	1056.4
XSECTION 136	ADDHYD	2.38	7	2	.10	.0	3.48	8.90	1.67	---	5.31	1711.76	719.2
XSECTION 137	ADDHYD	11.00	7	2	.10	.0	3.48	8.90	1.78	---	5.45	7826.94	711.5
XSECTION 40	RUNOFF	.23	7	2	.10	.0	3.48	8.90	1.77	---	4.97	288.67	1255.1
XSECTION 141	ADDHYD	11.23	7	2	.10	.0	3.48	8.90	1.78	---	5.45	7947.79	707.7
XSECTION 44	RUNOFF	.16	7	2	.10	.0	3.48	8.90	1.76	---	4.95	207.96	1299.7
XSECTION 145	ADDHYD	11.39	7	2	.10	.0	3.48	8.90	1.78	---	5.44	8020.55	704.2
XSECTION 50	RUNOFF	.94	7	2	.10	.0	3.48	8.90	1.83	---	4.88	1404.82	1494.5
XSECTION 51	REACH	.94	7	2	.10	.0	3.48	8.90	1.83	---	5.31	857.97	912.7

UMMARY TABLE 1 - SELECTED RESULTS OF STANDARD AND EXECUTIVE CONTROL INSTRUCTIONS IN THE ORDER PERFORMED
(A STAR(*) AFTER THE PEAK DISCHARGE TIME AND RATE (CFS) VALUES INDICATES A FLAT TOP HYDROGRAPH
A QUESTION MARK(?) INDICATES A HYDROGRAPH WITH PEAK AS LAST POINT.)

SECTION/ STRUCTURE ID	STANDARD CONTROL OPERATION	DRAINAGE AREA (SQ MI)	RAIN TABLE #	ANTEC MOIST COND	MAIN TIME INCREM (HR)	PRECIPITATION BEGIN (HR)	PRECIPITATION AMOUNT (IN)	PRECIPITATION DURATION (HR)	RUNOFF AMOUNT (IN)	PEAK DISCHARGE ELEVATION (FT)	PEAK DISCHARGE TIME (HR)	PEAK DISCHARGE RATE (CFS)	PEAK DISCHARGE RATE (CSM)
ALTERNATE 1 STORM 1													
XSECTION 52	RUNOFF	.45	7	2	.10	.0	3.48	8.90	1.76	---	5.13	456.28	1014.0
XSECTION 152	ADDHYD	1.39	7	2	.10	.0	3.48	8.90	1.81	---	5.25	1280.32	921.1
XSECTION 153	ADDHYD	12.78	7	2	.10	.0	3.48	8.90	1.79	---	5.41	9176.23	718.0
XSECTION 54	RUNOFF	1.33	7	2	.10	.0	3.48	8.90	1.48	---	5.13	1126.60	847.1
XSECTION 55	REACH	1.33	7	2	.10	.0	3.48	8.90	1.49	---	5.42	901.69	678.0
XSECTION 56	RUNOFF	.76	7	2	.10	.0	3.48	8.90	1.65	---	5.25	632.74	832.5
XSECTION 156	ADDHYD	2.09	7	2	.10	.0	3.48	8.90	1.54	---	5.35	1497.97	716.7
XSECTION 57	REACH	2.09	7	2	.10	.0	3.48	8.90	1.54	---	5.81	1209.21	578.6
XSECTION 58	RUNOFF	.41	7	2	.10	.0	3.48	8.90	1.69	---	5.22	357.11	871.0
XSECTION 158	ADDHYD	2.50	7	2	.10	.0	3.48	8.90	1.57	---	5.73	1384.57	553.8
XSECTION 159	ADDHYD	15.28	7	2	.10	.0	3.48	8.90	1.75	---	5.44	10355.10	677.7
XSECTION 59	REACH	15.28	7	2	.10	.0	3.48	8.90	1.75	---	5.80	9019.47	590.3
XSECTION 60	RUNOFF	.73	7	2	.10	.0	3.48	8.90	1.51	---	5.02	736.57	1009.0
XSECTION 61	REACH	.73	7	2	.10	.0	3.48	8.90	1.51	---	5.30	563.30	771.6
XSECTION 62	RUNOFF	.89	7	2	.10	.0	3.48	8.90	1.62	---	5.06	893.31	1003.7
XSECTION 162	ADDHYD	1.62	7	2	.10	.0	3.48	8.90	1.57	---	5.15	1378.44	850.9
XSECTION 63	REACH	1.62	7	2	.10	.0	3.48	8.90	1.57	---	5.48	1076.76	664.7
XSECTION 64	RUNOFF	1.35	7	2	.10	.0	3.48	8.90	1.63	---	5.31	1031.43	764.0
XSECTION 164	ADDHYD	2.97	7	2	.10	.0	3.48	8.90	1.59	---	5.40	2072.68	697.9
XSECTION 165	ADDHYD	18.25	7	2	.10	.0	3.48	8.90	1.72	---	5.72	10616.40	581.7
XSECTION 66	RUNOFF	.44	7	2	.10	.0	3.48	8.90	1.49	---	4.93	498.36	1132.6
XSECTION 67	REACH	.44	7	2	.10	.0	3.48	8.90	1.49	---	5.23	347.31	789.3
XSECTION 68	RUNOFF	.78	7	2	.10	.0	3.48	8.90	1.65	---	5.00	881.48	1130.1
XSECTION 168	ADDHYD	1.22	7	2	.10	.0	3.48	8.90	1.59	---	5.05	1163.13	953.4
XSECTION 169	ADDHYD	19.47	7	2	.10	.0	3.48	8.90	1.72	---	5.69	11011.70	565.6
XSECTION 69	REACH	19.47	7	2	.10	.0	3.48	8.90	1.72	---	5.99	10350.76	531.6
XSECTION 70	RUNOFF	.71	7	2	.10	.0	3.48	8.90	1.58	---	5.09	670.54	944.4
XSECTION 71	REACH	.71	7	2	.10	.0	3.48	8.90	1.58	---	5.30	611.42	861.1
XSECTION 72	RUNOFF	1.00	7	2	.10	.0	3.48	8.90	1.63	---	5.06	1008.40	1008.4
XSECTION 172	ADDHYD	1.71	7	2	.10	.0	3.48	8.90	1.60	---	5.15	1532.14	896.0
XSECTION 73	REACH	1.71	7	2	.10	.0	3.48	8.90	1.60	---	5.33	1445.79	845.5
XSECTION 74	RUNOFF	1.00	7	2	.10	.0	3.48	8.90	1.79	---	5.14	1021.03	1021.0
XSECTION 174	ADDHYD	2.71	7	2	.10	.0	3.48	8.90	1.67	---	5.25	2381.58	878.8
XSECTION 175	ADDHYD	22.18	7	2	.10	.0	3.48	8.90	1.71	---	5.91	11244.12	506.9
XSECTION 76	RUNOFF	1.85	7	2	.10	.0	3.48	8.90	1.85	---	5.26	1696.81	917.2
XSECTION 77	REACH	1.85	7	2	.10	.0	3.48	8.90	1.85	---	5.64	1474.98	797.3

SUMMARY TABLE 1 - SELECTED RESULTS OF STANDARD AND EXECUTIVE CONTROL INSTRUCTIONS IN THE ORDER PERFORMED
(A STAR(*) AFTER THE PEAK DISCHARGE TIME AND RATE (CFS) VALUES INDICATES A FLAT TOP HYDROGRAPH
A QUESTION MARK(?) INDICATES A HYDROGRAPH WITH PEAK AS LAST POINT.)

SECTION/ STRUCTURE ID	STANDARD CONTROL OPERATION	DRAINAGE AREA (SQ MI)	RAIN TABLE #	ANTEC MOIST COND	MAIN TIME INCREM (HR)	PRECIPITATION BEGIN (HR)	PRECIPITATION AMOUNT (IN)	PRECIPITATION DURATION (HR)	RUNOFF AMOUNT (IN)	PEAK DISCHARGE ELEVATION (FT)	PEAK DISCHARGE TIME (HR)	PEAK DISCHARGE RATE (CFS)	PEAK DISCHARGE RATE (CSM)
ALTERNATE 1 STORM 1													
XSECTION 78	RUNOFF	.39	7	2	.10	.0	3.48	8.90	1.52	---	4.97	424.98	1089.7
XSECTION 178	ADDHYD	2.24	7	2	.10	.0	3.48	8.90	1.80	---	5.60	1572.88	702.2
XSECTION 79	REACH	2.24	7	2	.10	.0	3.48	8.90	1.80	---	5.78	1529.02	682.6
XSECTION 80	RUNOFF	.27	7	2	.10	.0	3.48	8.90	1.46	---	4.91	310.19	1148.8
XSECTION 180	ADDHYD	2.51	7	2	.10	.0	3.48	8.90	1.76	---	5.77	1566.48	624.1
XSECTION 181	ADDHYD	24.69	7	2	.10	.0	3.48	8.90	1.72	---	5.88	12770.21	517.2