DESIGN CALCULATIONS
for
GROVERS AVENUE STORM DRAIN LATERAL
FCD No.: 93-21

Property of
d Control District of MC Library
Please Return to
2801 W. Durango
Phoenix, AZ 85009

Morrison Maierle/CSSA INC.
ENGINEERS
PLANNERS
SURVEYORS

DESIGN CALCULATIONS
for
GROVERS AVENUE
STORM DRAIN LATERAL
FCD No.: 93-21

SUBMITTED TO:

FLOOD CONTROL DISTRICT OF MARICOPA COUNTY
2801 WEST DURANGO STREET
PHOENIX, AZ 85009

SUBMITTED BY:

Morrison Maierle/CSSA INC.

13483
BRUCE J.
FRIEDHOFF
5-15-95
Date Signed
ARIZONA, U.S.A.

MAY 15, 1995

MM/CSSA Project No.: 8156.001

TABLE OF CONTENTS

Page No.

A. Introduction 1

B. Primary Design Calculations
1. Storm Drain Hydraulic Calculations 2
2. Inlet/Connector Pipe Configuration Summary 4
3. Inlet/Connector Pipe Hydraulic Calculations 5
4. D-Load Calculations 9

C. RCP Replacing CBC Alternative Calculations
1. Storm Drain Hydraulic Calculations 26
2. Inlet/Connector Pipe Configuration Summary 28
3. Inlet/Connector Pipe Hydraulic Calculations 29

D. CMP Replacing CBC Alternative Calculations
1. Inlet/Connector Pipe Configuration Summary 33
2. Inlet/Connector Pipe Hydraulic Calculations 34

E. Rainfall/Runoff Analysis
1. Rainfall Data and Analysis 38
2. Excess Rainfall Intensity Duration 39
3. Drainage Area Data and Lag Time Computations 40
4. Split Flow Approximations 42
5. Revised Reach Route Data 51
6. HEC-1 Input/Output Results 52
7. Schematic Flow Diagram 78

F. Additional Hydraulic Analysis
1. HEC-2 Analysis of Catch Basin Wings 79
2. Check of Storm Drain Computer Code Calculations 105

G. Geotechnical/Soils Investigation
1. Subconsultant Report 109

H. Additional Design Information
1. Location Map 120
2. Catch Basin Details 121
3. Preliminary Construction Cost Estimates 123
4. Inlet Alternatives 127

I. Quantity Take-Off for Engineer's Cost Estimate 135

J. Structural Design Computations 136

Registered Professional Engineer (Civil)
CERTIFICATE NO.
13483
BRUCE J.
FRIEDHOFF
5-15-95
Date Signed
ARIZONA, U.S.A.

A. INTRODUCTION

The following calculations accompany the Final Design Report and provide the basis for the Final Design Submittal. Calculations are provided for the primary design and for two construction alternatives. The rationale for the primary design selection is documented in the Final Design Report.

B. PRIMARY DESIGN CALCULATIONS

JOB NAME: GROVERS AVENUE STORM DRAIN LATERAL
JOB NUMBER: 8156.001
BY: BRUCE FRIEDHOFF
Date: 09-22-1994
Time: 10:29:14

Job Statistics:

Number of Pipes	=	12
Total Length of Pipe	=	5,146 Feet
Longest Pipe	=	1,348.00 Feet
Shortest Pipe	=	12.00 Feet
Maximum Flow	=	525.00 cfs
Minimum Flow	=	8.00 cfs
Maximum Velocity	=	11.89 fps
Minimum Velocity	=	2.55 fps
Maximum Cover Above Crown	=	19.13 Feet
Minimum Cover Above Crown	=	6.64 Feet
Maximum (Ground - HGL)	=	6.06 Feet
Minimum (Ground - HGL)	=	2.25 Feet
Maximum (HGL - Crown)	=	11.81 Feet
Minimum (HGL - Crown)	=	0.40 Feet

--------+1--------+2--------+3--------+4--------+5--------+6--------+7--------+8--------+9--------+10--------+11--------+12--------+13

TABLE 1 - INPUT DATA

Pipe Number	Upstream Station	Length (Feet)	Type of Pipe	Diameter (Inches)	Span (Feet)	Rise (Feet)	Number of Pipes	Flow (cfs)	Flow Per Pipe	Ground Elevation	Crown Elevation	Downstream Pipe No.
1	65	237	CMP 0.024	90			1	525.00	525.00	1446.95	1429.85	0
2	77	12	CBC 0.012		12.00	12.00	1	525.00	525.00	1446.95	1435.00	1
3	1,298	1,221	CBC 0.012		8.00	8.00	1	509.00	509.00	1450.98	1440.89	2
4	2,646	1,348	RCP 0.012	84			1	349.00	349.00	1453.44	1445.72	3
5	3,293	647	RCP 0.012	48			1	90.00	90.00	1457.30	1448.85	4
6	3,800	507	RCP 0.012	42			1	82.00	82.00	1460.48	1451.69	5
7	4,337	537	RCP 0.012	42			1	82.00	82.00	1461.97	1453.55	6
8	1,437	139	RCP 0.012	60			1	157.00	157.00	1451.26	1441.33	3
9	2,810	164	RCP 0.012	84			1	255.00	255.00	1455.00	1448.36	4
10	3,352	59	RCP 0.012	24			1	8.00	8.00	1457.35	1449.82	5
11	4,468	131	RCP 0.012	48			1	82.00	82.00	1462.16	1454.98	7
12	2,954	144	RCP 0.012	60			1	165.00	165.00	1455.70	1450.64	9

++++++++1++++++++2++++++++3++++++++4++++++++5++++++++6++++++++7++++++++8++++++++9++++++++10++++++++11++++++++12++++++++13

TABLE 2 - HYDRAULIC DESIGN DATA

Pipe Number	Area (Sq Ft)	Perimeter (Feet)	Radius (Feet)	Velocity (fps)	Vel. Head (Feet)	Energy Slope	Pipe Slope	K	Angle	Minor Loss (Feet)	Pipe Loss (Feet)	EGL (Feet)	HGL (Feet)
Outfall Conditions				0.00								1437.80	1437.80
1	44.16	24.00	1.84	11.89	2.20	0.01627	0.00857	1.0	0	2.20	3.86	1440.00	1437.80
												1443.85	1441.66
2	144.00	48.00	3.00	3.65	0.21	0.00020	0.42917	1.0	0	1.06	0.00	1444.91	1444.70
												1444.91	1444.70

DESIGN

3	64.00	32.00	2.00	7.95	0.98	0.00163	0.00482	0.3	0	0.09	1.99	1444.99	1444.01
												1446.98	1446.00
4	38.47	22.00	1.75	9.07	1.28	0.00254	0.00358	0.3	0	0.01	3.42	1446.99	1445.71
												1450.41	1449.13
5	12.56	13.00	0.97	7.17	0.80	0.00349	0.00484	0.3	0	0.02	2.26	1450.42	1449.63
												1452.68	1451.88
6	9.62	11.00	0.87	8.53	1.13	0.00564	0.00560	0.3	0	0.01	2.86	1452.69	1451.56
												1455.55	1454.42
7	9.62	11.00	0.87	8.53	1.13	0.00564	0.00346	0.3	0	0.00	3.03	1455.55	1454.42
												1458.58	1457.45
8	19.63	16.00	1.23	8.00	0.99	0.00316	0.00317	1.0	90	0.99	0.44	1447.98	1446.98
												1448.42	1447.42
9	38.47	22.00	1.75	6.63	0.68	0.00135	0.01610	1.0	90	0.68	0.22	1451.09	1450.41
												1451.31	1450.63
10	3.14	6.00	0.52	2.55	0.10	0.00100	0.01644	1.0	90	0.10	0.06	1452.78	1452.68
												1452.84	1452.74
11	12.56	13.00	0.97	6.53	0.66	0.00289	0.01092	1.0	90	0.66	0.38	1459.24	1458.58
												1459.62	1458.96
12	19.63	16.00	1.23	8.41	1.10	0.00349	0.01583	0.3	90	0.33	0.50	1451.64	1450.54
												1452.14	1451.04

+++++++1++++++++2++++++++3+++++++++4+++++++++5+++++++++6++++++++++7++++++++++8+++++++++9++++++++++10++++++++11++++++++12++++++++13

TABLE 3 - GRAPH DATA SUMMARY

Pipe Number	Station (Feet)	Ground Elevation	EGL Elevation	HGL Elevation	Crown Elevation	Invert Elevation	Cover (Feet)	Ground-HGL (Feet)	HGL-Crown (Feet)
			1437.80	1437.80					
1	-172	1446.95	1440.00	1437.80	1427.82	1420.32	19.13	9.15	9.98
	65	1446.95	1443.85	1441.66	1429.85	1422.35	17.10	5.29	11.81
2	65	1446.95	1444.91	1444.70	1429.85	1417.85	17.10	2.25	14.85
	77	1446.95	1444.91	1444.70	1435.00	1423.00	11.95	2.25	9.70
3	77	1446.95	1444.99	1444.01	1435.00	1427.00	11.95	2.94	9.01
	1298	1450.98	1446.98	1446.00	1440.89	1432.89	10.09	4.98	5.11
4	1298	1450.98	1446.99	1445.71	1440.89	1433.89	10.09	5.27	4.82
	2646	1453.44	1450.41	1449.13	1445.72	1438.72	7.72	4.31	3.41
5	2646	1453.44	1450.42	1449.63	1445.72	1441.72	7.72	3.81	3.91
	3293	1457.30	1452.68	1451.88	1448.85	1444.85	8.45	5.42	3.03
6	3293	1457.30	1452.69	1451.56	1448.85	1445.35	8.45	5.74	2.71
	3800	1460.48	1455.55	1454.42	1451.69	1448.19	8.79	6.06	2.73
7	3800	1460.48	1455.55	1454.42	1451.69	1448.19	8.79	6.06	2.73
	4337	1461.97	1458.58	1457.45	1453.55	1450.05	8.42	4.52	3.90
8	1298	1450.98	1447.98	1446.98	1440.89	1435.89	10.09	4.00	6.09
	1437	1451.26	1448.42	1447.42	1441.33	1436.33	9.93	3.84	6.09
9	2646	1453.44	1451.09	1450.41	1445.72	1438.72	7.72	3.03	4.69
	2810	1455.00	1451.31	1450.63	1448.36	1441.36	6.64	4.37	2.27
10	3293	1457.30	1452.78	1452.68	1448.85	1446.85	8.45	4.62	3.83
	3352	1457.35	1452.84	1452.74	1449.82	1447.82	7.53	4.61	2.92
11	4337	1461.97	1459.24	1458.58	1453.55	1449.55	8.42	3.39	5.03
	4468	1462.16	1459.62	1458.96	1454.98	1450.98	7.18	3.20	3.98
12	2810	1455.00	1451.64	1450.54	1448.36	1443.36	6.64	4.46	2.18
	2954	1455.70	1452.14	1451.04	1450.64	1445.64	5.06	4.66	0.40

Grovers Avenue Storm Drain Lateral

Inlet/Connector Pipe Configuration Summary - CBC (Primary Design)

Inlet No.	Qty	Description	Location	Design Flow (cfs)	Inlet Flow Capacity (cfs)	Flow [illegible]	C P D (ft)	C P L t(ft)	L (ft)	L ysd	TOC	ELI	HGL UpNode	HGL DNode	STA UpNode	STA DNode	HGL m	STA Inlet	TW Elev	Conn ELI SD	Conn ELI Joint	m to joint	m to SD	< to Joint	< to SD	DEPTH OF COVER VALUES Min Cvr	Max Cvr
1	1	Catch Basin Type M-2, L = 13,17 (P-1569 Mod)	30th Way ES - RT	40 0	26 0	14 0	2 00	11 30			62 38	56 40	1458 96	1458 58	227	96	0 00290	230	58 97	51 94			0 3947		23.26	3 48	7.94
2	1	Catch Basin Type M-2, L = 13,17 (P-1569 Mod)	30th Way WS - LT	40 0	26 0	14 0	2 00	18 30	6 20	12 10	62 47	54 80	1458 96	1458 58	227	96	0 00290	235	58 98	51 98	52 32	0 4000	0 0281	23.58	1.61	5 17	7.99
3	1	Catch Basin Type M-2, L = 13,17 (P-1569 Mod)	30th Way ES - RT	14 0	11 0	3 0	2 00	11 40			61 75	56 40	1458 96	1458 58	227	96	0 00290	196	58 87	51 72			0 4105		24.24	2 85	7.53
4	1	Catch Basin Type M-2, L = 13,17 (P-1569 Mod)	30th Way WS - LT	14 0	11 0	3 0	2 00	19 10	7 30	11 80	61 85	54 67	1458 96	1458 58	227	96	0 00290	201	58 88	51 76	51 98	0 3685	0 0196	21.62	1.12	4 68	7.60
5	1	Catch Basin Type M-2, L = 13,17 (P-1569 Mod)	30th Way ES - RT	4 0	4 0	None	2 00	11 10			61 48	56 40	1458 96	1458 58	227	96	0.00290	162	58 77	51 49			0 4423		26.26	2.58	7.49
6	1	Catch Basin Type M-2, L = 13,17 (P-1569 Mod)	30th Way WS - LT	4 0	4 0	None	2 00	19 20	7 20	12 00	61 48	54 53	1458 96	1458 58	227	96	0.00290	167	58 79	51 62	51 84	0 3736	0 0267	21 94	1.53	4.45	7.46
			Subtotals		82 0	None																					
7	1	Catch Basin Type M-1, L = 6 (P-1569)	29th Street ES - RT	8 0	4 0	4 0	2 00	21 50	11 70	9 80	57 66	50 26	1452 74	1452 68	156	96	0.00102	155	52 74	47 82	48.76	0 1274	0 0959	7.32	5.60	4.81	7.24
8	1	Catch Basin Type M-1, L = 6 (P-1569)	29th Street WS - LT	8 0	4 0	4 0	2 00	13 70			57 60	52 10	1452 74	1452 68	156	96	0.00102	156	52.74	47 82			0 3124		18.21	3.00	7.28
			Subtotals		8 0	8 0																					
9	1 (gr)	Catch Basin & Apron, Type N , Single (P-1570)	SE Cor 28th St /Grov - R	5.0	5.0	None	2 00	30 10	20 70	9 40	53 60	50.06	1451 88	1449.63	3293	2646	0.00348	2723	49.90	43.11	48.46	0.0773	0.5691	4.43	34.69	1.54	8.49
			Subtotals		5.0	None																					
10	1	Catch Basin Type M-2, L = 13,17 (P-1569 Mod)	28th Street ES - RT	122 0	52 5	69 5	3 00	16 50			55 81	48 13	1451 07	1450 54	406	262	0.00368	403	51.06	46.59			0 0933		5.36	4.18	5.72
11	1	Catch Basin Type M-2, L = 13,17 (P-1569 Mod)	28th Street ES - RT	69 5	30 0	39 5	2 00	16 30			55 63	47 93	1451 07	1450 54	406	262	0.00368	369	50.93	46.55			0 0847		4.86	5.20	8.58
12	1	Catch Basin Type M-2, L = 13,17 (P-1569 Mod)	28th Street WS - LT	122 0	52 5	69 5	3 00	29 10	17 40	11 70	55 04	49 49	1451 07	1450 54	406	262	0.00368	314	50.73	45.16	45.56	0 2259	0.0342	13.05	1.96	2.05	8.38
13	1	Catch Basin Type M-2, L = 13,17 (P-1569 Mod)	28th Street WS - LT	69 5	30 0	39 5	2.00	28 90	17 30	11 60	55 59	50 04	1451 07	1450 54	406	262	0.00368	280	50 61	45.12	45.96	0 2358	0 0724	13.64	4.15	3.05	7.97
14	1	Catch Basin Type M-2, L = 13,17 (P-1569 Mod)	28th Street WS - LT	39 5	20 5	19 0	2 00	27 50			54 14	48 94	1450 63	1450 41	262	98	0.00134	246	50.61	43.58			0 1949		11.24	2.70	8.06
15	1	Catch Basin Type M-2, L = 13,17 (P-1569 Mod)	28th Street ES - RT	39 5	20 5	19 0	2 00	15 30			54 66	46 86	1450 63	1450 41	262	98	0.00134	241	50 60	43 49			0.2216		12.60	5.28	8.67
16	1	Catch Basin Type M-2, L = 13,17 (P-1569 Mod)	28th Street WS - LT	19 0	12 5	6 5	2 00	27 60			53 82	48 27	1450 63	1450 41	262	98	0.00134	212	50.56	43 03			0.1899		10.96	3.05	8.29
17	1	Catch Basin Type M-2, L = 13,17 (P-1569 Mod)	28th Street ES - RT	19 0	12 5	6 5	2 00	15 30			53 80	46 21	1450 63	1450 41	262	98	0 00134	207	50.56	42 95			0.2131		12.30	5.09	8.35
18	1	Catch Basin Type M-2, L = 13,17 (P-1569 Mod)	28th Street WS - LT	12 0	12 0	None	2 00	27 70			53 42	48 37	1450 63	1450 41	262	98	0.00134	178	50.52	42 48			0 2126		12.28	2.55	8.44
19	1	Catch Basin Type M-2, L = 13,17 (P-1569 Mod)	28th Street ES - RT	12 0	12 0	None	2 00	15 60			53 42	46 37	1450 63	1450 41	262	98	0.00134	173	50 61	42 40			0.2661		14.84	4.56	8.52
			Subtotals		256 0	None																					
20	1	Catch Basin Type M-1, L = 10 (P-1569)	SE Cor 26th St /Grov - R	3 0	3 0	None	2 00	21 30	10 10	11 20	51 19	45.93	1449 13	1445 71	2646	1298	0.00254	1328	45.79	36.49	43.99	0.1921	0.6696	11.07	42.04	2.76	12.20
			Subtotals		3 0	None																					
21	1	Catch Basin Type M-2, L = 13,17 (P-1569 Mod)	26th Street WS - LT	71 0	40 0	31 0	3 00	23 40	7 00	16 40	51 29	46 63	1447 42	1446 98	237	98	0.00317	235	47 41	37.14	46.63	0 0000	0.5787	0.00	35.36	1.16	10.65
22	1	Catch Basin Type M-2, L = 13,17 (P-1569 Mod)	26th Street ES - RT	71 0	40 0	31 0	3 00	14 70			51 22	14 33	1447 42	1446 98	237	98	0 00317	230	47.40	37 21			0 4844		28.97	3.39	10.51
23	1	Catch Basin Type M-2, L = 13,17 (P-1569 Mod)	26th Street WS - LT	31 0	19 5	11 5	2 00	23 30	7 10	16 20	50 76	46 67	1447 42	1446 98	237	98	0 00317	201	47 31	37 74	46.67	0 0000	0.5612	0.00	33.45	1.59	10.52
24	1	Catch Basin Type M-2, L = 13,17 (P-1569 Mod)	26th Street ES - RT	31 0	19 5	11 5	2 00	14 60			50 67	44 37	1447 42	1446 98	237	98	0.00317	196	47 29	37 24			0 4684		29.23	3.80	10.93
25	1	Catch Basin Type M-2, L = 13,17 (P-1569 Mod)	26th Street WS - LT	18 5	18 5	None	2 00	23 30	7 20	16 10	50 46	46 21	1447 42	1446 98	237	98	0 00317	167	47 20	36.76	46.21	0 0000	0.5870	0.00	35.94	1.76	11.20
26	1	Catch Basin Type M-2, L = 13,17 (P-1569 Mod)	26th Street ES - RT	18 5	18 5	None	2 00	14 60			50 46	43 41	1447 42	1446 98	237	98	0 00317	162	47 18	36 69			0 4603		27.41	4.56	11.27
			Subtotals		156 0	None																					
27	1	Catch Basin Type M-1, L = 10 (P-1569)	Grovers Ave SS - RT	6.0	10 0	None	2 00	7 00			47 93	43 93	1446 00	1444 01	1296	77	0.00163	248	44.29	36.68			1.0000		90.00	1.50	8.76
			Subtotals		6 0	None																					
28	1	Catch Basin Type M-1, L = 17 (P-1569)	NE Corner Grov/C C - LT	7 0	10 0	None	2 00	8 40			47 64	43 54	1446 00	1444 01	1296	77	0 00163	96	44 04	35 95			1 0000		90.00	1.50	9.09
			Subtotals		7 0	None																					
29	1 (gr)	Catch Basin & Apron,Type N,Single (P-1570)	SE Corner Grov/C C - RT	3 0	5 0	None	2 00	40 00	19 70	20 30	46 00	43 00	1444 70	1444 7	77	66	0.00000	67	44 70	34 67	42 30	0 0365	0 3759	2.04	22.06	1.00	9.33
			Subtotals		3 0	None																					
			TOTALS		525	None																					
ADDITIONAL CATCH BASINS																											
30	1 (gr)	Catch Basin & Apron,Type N,Single (P-1570)	Grovers Ave SS - RT				2 00				61 26	57 26						4310		50 73						2.00	8.52
31	1	Catch Basin Type M-1, L = 6 (P-1569)	Grovers Ave NS - LT				2 00				59 89	55 88						3776		48 80						1.51	8.59
32	1 (gr)	Catch Basin & Apron,Type N,Single (P-1570)	Grovers Ave SS - RT				2 00				58 65	54 65						3525		47 40						2.00	9.25
33	1 (gr)	Catch Basin & Apron,Type N,Single (P-1570)	28th St Det Bas Drain - RT				2 00				53 40	49 40						173		n/a						2.00	6.20
34	1	Catch Basin Type M-1, L = 6 (P-1569)	Grovers Ave NS - LT				2 00				52 85	48 85						2040		39 56						1.50	10.79
35	1	Catch Basin Type M-1, L = 6 (P-1569)	Grovers Ave SS - RT				2 00				52 50	48 50						1693		38 53						1.50	11.47
36	1	Catch Basin Type M-1, L = 6 (P-1569)	Grovers Ave NS - LT				2 00				50 14	45 14						942		36 63						2.50	11.01

COMPUTE DEPTH OF COVER OVER MAIN LINE AND CONNECTOR PIPE FOR INPUT TO D-LOAD CALCULATION (see above for connector pipe cover depths)

Note: Depth measured to CROWN of pipe

Main Line - Grovers Ave

	DS STA	US STA	Pipe ID	Max Cvr	@STA	Min Cvr	@STA
	0+71	12+98	8'8 CBC	13 11	7+00	10 09	12+98
	12+98	26+46	84" RCP	10 09	12+98	7 74	26+46
	26+46	32+93	48" RCP	8 45	32+93	7 70	26+46
	32+93	43+37	42" RCP	8 80	38+00	8 42	43+37

Side Streets

	DS STA	US STA	Pipe ID	Max Cvr	@STA	Min Cvr	@STA
26th St	0+98	2+39	60" RCP	11.59	1+04	10 00	2+39
28th St	0+98	2+62	84" RCP	7 66	1+03	8 64	2+62
28th St	2+62	4+06	60" RCP	6 64	2+62	5 36	4+06
29th St	0+96	1+55	24" RCP	8 45	0+96	7 50	1+26
30th Wy	0+96	2+35	48" RCP	7 95	0+96	7 24	2+35

DESIGN

GROVERS AVENUE STORM DRAIN

Compute the hydraulic profile for the inlet connector pipe.

RE: Storm Drain Design Manual, City of Phoenix, 1987, Pages 18, 31-34 (Design Alternative)

Design data.

Location:	Inlet 1	Inlet 2	Inlet 3	Inlet 4	Inlet 5	Inlet 6	Inlet 7
Pipe material:	rcp	rcp	rcp	rcp	rcp	rcp	rcp
Mannings N-Value, n =	0.012	0.012	0.012	0.012	0.012	0.012	0.012
Pipe diameter (D) =	24 In	24 In	24 In	24 In	24 In	24 In	24 In
Pipe Length (l) =	11.30 Ft	18.30 Ft	11.40 Ft	19.10 Ft	11.10 Ft	19.20 Ft	21.50 Ft
Horiz. Dist. CB Face to CL Rec Pipe =	12.50 Ft	20.50 Ft	12.50 Ft	20.50 Ft	12.50 Ft	20.00 Ft	23.50 Ft
Pipe Slope at Inlet (s) =	0.39470 Ft/Ft	0.40000 Ft/Ft	0.41050 Ft/Ft	0.36850 Ft/Ft	0.44230 Ft/Ft	0.37360 Ft/Ft	0.12740 Ft/Ft
Top of Curb Elevation (tc) =	62.38 Ft	62.47 Ft	61.75 Ft	61.85 Ft	61.48 Ft	61.48 Ft	57.56 Ft
Curb Face Opening (cf) =	8 In	8 In	8 In	8 In	8 In	8 In	8 In
Pipe Diameter, d =	2.00 Ft	2.00 Ft	2.00 Ft	2.00 Ft	2.00 Ft	2.00 Ft	2.00 Ft
Deflection Angle, angle = arctan (s) =	21.54 Deg	21.80 Deg	22.32 Deg	20.23 Deg	23.86 Deg	20.49 Deg	7.26 Deg
Inlet Diameter, di = d / cos (angle) =	2.15 Ft	2.15 Ft	2.16 Ft	2.13 Ft	2.19 Ft	2.14 Ft	2.02 Ft
Maximum Crown Elevation (MaxCEi) = tc - cf/12 - .5 =	61.21	61.30	60.58	60.68	60.31	60.31	56.39
Crown Elevation at Inlet (CEi) =	58.55 ft	56.95 ft	58.56 ft	56.80 ft	58.59 ft	56.67 ft	52.27 ft
Inlet Invert Elevation (ELi) =	56.40 Ft	54.80 Ft	56.40 Ft	54.67 Ft	56.40 Ft	54.53 Ft	50.25 Ft
Design Flow (Q) =	26.00 cfs	26.00 cfs	11.00 cfs	11.00 cfs	4.00 cfs	4.00 cfs	4.00 cfs
Tailwater Elevation (Tw) =	58.97 Ft	58.98 Ft	58.87 Ft	58.88 Ft	58.77 Ft	58.79 Ft	52.74 Ft

Compute flow assuming outlet control.

Velocity, v = Q / (¶(d/12)²/4) =	8.28 Fps	8.28 Fps	3.50 Fps	3.50 Fps	1.27 Fps	1.27 Fps	1.27 Fps
Velocity Head, hv = v²+2g =	1.05 Ft	1.05 Ft	0.19 Ft	0.19 Ft	0.02 Ft	0.02 Ft	0.02 Ft
Friction Slope, Sf = 4.66 * n² * Q² + (d^(16/3)) =	0.01125 Ft/Ft	0.01125 Ft/Ft	0.00201 Ft/Ft	0.00201 Ft/Ft	0.00027 Ft/Ft	0.00027 Ft/Ft	0.00027 Ft/Ft
Entrance Loss Coeficient, Ke =	0.50	0.50	0.50	0.50	0.50	0.50	0.50
Exit Loss Coeficient, Ko =	1	1	1	1	1	1	1
Pipe Loss, hp = Sf * l =	0.13 Ft	0.21 Ft	0.02 Ft	0.04 Ft	0.00 Ft	0.01 Ft	0.01 Ft
Entrance Loss, he = Ke * hv =	0.53 Ft	0.53 Ft	0.09 Ft	0.09 Ft	0.01 Ft	0.01 Ft	0.01 Ft
Exit Loss, ho = Ko * hv =	1.05 Ft	1.05 Ft	0.19 Ft	0.19 Ft	0.02 Ft	0.02 Ft	0.02 Ft
Total Friction Loss, H = hp + he + ho =	1.70 Ft	1.78 Ft	0.31 Ft	0.32 Ft	0.04 Ft	0.04 Ft	0.04 Ft
Headwater Elevation, Hwo = Tw + H =	60.67 Ft	60.76 Ft	59.18 Ft	59.20 Ft	58.81 Ft	58.83 Ft	52.78 Ft

Compute flow assuming inlet control using HEC-12.

Square Edged Headwall							
Q =	26.00 cfs	26.00 cfs	11.00 cfs	11.00 cfs	4.00 cfs	4.00 cfs	4.00 cfs
x = Q / d^2.5 =	4.60	4.60	1.94	1.94	0.71	0.71	0.71
Hw/d =	1.06 Ft/Ft	1.06 Ft/Ft	0.81 Ft/Ft	0.81 Ft/Ft	0.42 Ft/Ft	0.42 Ft/Ft	0.42 Ft/Ft
Hwi = Hw * d + ELi =	58.52 Ft	56.92 Ft	58.01 Ft	56.28 Ft	57.24 Ft	55.37 Ft	51.09 Ft

CALCULATE FREEBOARD AND DEPTH OF BASIN:

Controlling Headwater Condition (Max. of Hwo or Hwi),							
HW =	60.67 Ft	60.76 Ft	59.18 Ft	59.20 Ft	58.81 Ft	58.83 Ft	52.78 Ft
Freeboard (gutter-HW), FB = tc - cf+12 - HW =	1.04 Ft	1.04 Ft	1.91 Ft	1.98 Ft	2.00 Ft	1.98 Ft	4.11 Ft
Headwater-Tailwater =	1.70 Ft	1.78 Ft	0.31 Ft	0.32 Ft	0.04 Ft	0.04 Ft	0.04 Ft
Headwater-Crown El =	2.12 Ft	3.81 Ft	0.61 Ft	2.40 Ft	0.22 Ft	2.17 Ft	0.52 Ft
HGL Slope =	13.6360 %	8.6988 %	2.4424 %	1.5649 %	0.3223 %	0.2122 %	0.1832 %

GROVERS AVENUE STORM DRAIN

Inlet 8	Inlet 9	Inlet 10	Inlet 11	Inlet 12	Inlet 13	Inlet 14	Inlet 15	Inlet 16	Inlet 17
rcp	rcp	rcp	rcp	rcp	rcp	rcp	rcp	rcp	rcp
0.012	0.012	0.012	0.012	0.012	0.012	0.012	0.012	0.012	0.012
24 In	24 In	36 In	24 In	36 In	24 In	24 In	24 In	24 In	24 In
13.70 Ft	30.10 Ft	16.50 Ft	16.30 Ft	29.10 Ft	28.90 Ft	27.50 Ft	15.30 Ft	27.60 Ft	15.30 Ft
15.50 Ft	31.00 Ft	18.50 Ft	18.50 Ft	30.50 Ft	30.50 Ft	30.50 Ft	18.50 Ft	30.50 Ft	18.50 Ft
0.31240 Ft/Ft	0.07730 Ft/Ft	0.09330 Ft/Ft	0.08470 Ft/Ft	0.22590 Ft/Ft	0.23580 Ft/Ft	0.19490 Ft/Ft	0.22160 Ft/Ft	0.18990 Ft/Ft	0.21310 Ft/Ft
57.60 Ft	53.60 Ft	55.81 Ft	55.63 Ft	55.04 Ft	55.59 Ft	54.14 Ft	54.66 Ft	53.62 Ft	53.80 Ft
8 In	0 In	8 In	8 In	8 In	8 In	8 In	8 In	8 In	8 In
2.00 Ft	2.00 Ft	3.00 Ft	2.00 Ft	3.00 Ft	2.00 Ft	2.00 Ft	2.00 Ft	2.00 Ft	2.00 Ft
17.35 Deg	4.42 Deg	5.33 Deg	4.84 Deg	12.73 Deg	13.27 Deg	11.03 Deg	12.50 Deg	10.75 Deg	12.03 Deg
2.10 Ft	2.01 Ft	3.01 Ft	2.01 Ft	3.08 Ft	2.05 Ft	2.04 Ft	2.05 Ft	2.04 Ft	2.04 Ft
56.43	53.10	54.64	54.46	53.87	54.42	52.97	53.49	52.65	52.63
54.20 ft	52.07 ft	51.14 ft	49.94 ft	52.57 ft	52.09 ft	50.98 ft	48.93 ft	50.31 ft	48.25 ft
52.10 Ft	50.06 Ft	48.13 Ft	47.93 Ft	49.49 Ft	50.04 Ft	48.94 Ft	46.88 Ft	48.27 Ft	46.21 Ft
4.00 cfs	5.00 cfs	52.50 cfs	30.00 cfs	52.50 cfs	30.00 cfs	20.50 cfs	20.50 cfs	12.50 cfs	12.50 cfs
52.74 Ft	49.90 Ft	51.06 Ft	50.93 Ft	50.73 Ft	50.61 Ft	50.61 Ft	50.60 Ft	50.56 Ft	50.56 Ft
1.27 Fps	1.59 Fps	7.43 Fps	9.55 Fps	7.43 Fps	9.55 Fps	6.53 Fps	6.53 Fps	3.98 Fps	3.98 Fps
0.02 Ft	0.04 Ft	0.85 Ft	1.40 Ft	0.85 Ft	1.40 Ft	0.65 Ft	0.65 Ft	0.24 Ft	0.24 Ft
0.00027 Ft/Ft	0.00042 Ft/Ft	0.00528 Ft/Ft	0.01498 Ft/Ft	0.00528 Ft/Ft	0.01498 Ft/Ft	0.00699 Ft/Ft	0.00699 Ft/Ft	0.00260 Ft/Ft	0.00260 Ft/Ft
0.50	0.50	0.50	0.50	0.50	0.50	0.50	0.50	0.50	0.50
1	1	1	1	1	1	1	1	1	1
0.00 Ft	0.01 Ft	0.09 Ft	0.24 Ft	0.15 Ft	0.43 Ft	0.19 Ft	0.11 Ft	0.07 Ft	0.04 Ft
0.01 Ft	0.02 Ft	0.42 Ft	0.70 Ft	0.42 Ft	0.70 Ft	0.33 Ft	0.33 Ft	0.12 Ft	0.12 Ft
0.02 Ft	0.04 Ft	0.85 Ft	1.40 Ft	0.85 Ft	1.40 Ft	0.65 Ft	0.65 Ft	0.24 Ft	0.24 Ft
0.04 Ft	0.07 Ft	1.36 Ft	2.34 Ft	1.42 Ft	2.53 Ft	1.17 Ft	1.09 Ft	0.44 Ft	0.40 Ft
52.78 Ft	49.97 Ft	52.42 Ft	53.27 Ft	52.15 Ft	53.14 Ft	51.78 Ft	51.69 Ft	51.00 Ft	50.96 Ft
4.00 cfs	5.00 cfs	52.50 cfs	30.00 cfs	52.50 cfs	30.00 cfs	20.50 cfs	20.50 cfs	12.50 cfs	12.50 cfs
0.71	0.88	3.37	5.30	3.37	5.30	3.62	3.62	2.21	2.21
0.42 Ft/Ft	0.49 Ft/Ft	1.10 Ft/Ft	0.65 Ft/Ft	1.10 Ft/Ft	0.65 Ft/Ft	1.13 Ft/Ft	1.13 Ft/Ft	0.87 Ft/Ft	0.87 Ft/Ft
52.94 Ft	51.04 Ft	51.44 Ft	49.23 Ft	52.80 Ft	51.34 Ft	51.21 Ft	49.15 Ft	50.01 Ft	47.95 Ft
52.94 Ft	51.04 Ft	52.42 Ft	53.27 Ft	52.80 Ft	53.14 Ft	51.78 Ft	51.69 Ft	51.00 Ft	50.96 Ft
4.00 Ft	2.56 Ft	2.73 Ft	1.69 Ft	1.57 Ft	1.78 Ft	1.69 Ft	2.31 Ft	2.16 Ft	2.17 Ft
0.20 Ft	1.14 Ft	1.36 Ft	2.34 Ft	2.07 Ft	2.53 Ft	1.17 Ft	1.09 Ft	0.44 Ft	0.40 Ft
-1.26 Ft	-1.02 Ft	1.27 Ft	3.34 Ft	0.24 Ft	1.05 Ft	0.81 Ft	2.76 Ft	0.69 Ft	2.71 Ft
1.2753 %	3.6868 %	7.3377 %	12.6714 %	6.7937 %	8.3047 %	3.8457 %	5.8790 %	1.4307 %	2.1858 %

-6-

GROVERS AVENUE STORM DRAIN

Inlet 18	Inlet 19	Inlet 20	Inlet 21	Inlet 22	Inlet 23	Inlet 24	Inlet 25	Inlet 26	Inlet 27
rcp	rcp	rcp	rcp	rcp	rcp	rcp	rcp	rcp	rcp
0.012	0.012	0.012	0.012	0.012	0.012	0.012	0.012	0.012	0.012
24 In	24 In	24 In	36 In	36 In	24 In	24 In	24 In	24 In	24 In
27.70 Ft	15.50 Ft	21.30 Ft	23.40 Ft	14.70 Ft	23.30 Ft	14.60 Ft	23.30 Ft	14.60 Ft	7.00 Ft
30.50 Ft	18.50 Ft	22.00 Ft	24.50 Ft	16.50 Ft	24.50 Ft	16.50 Ft	24.50 Ft	16.50 Ft	7.00 Ft
0.21260 Ft/Ft	0.25610 Ft/Ft	0.92100 Ft/Ft	0.00000 Ft/Ft	0.48440 Ft/Ft	0.00000 Ft/Ft	0.48840 Ft/Ft	0.00000 Ft/Ft	0.46030 Ft/Ft	1.00000 Ft/Ft
53.42 Ft	53.42 Ft	51.19 Ft	51.29 Ft	51.22 Ft	50.76 Ft	50.67 Ft	50.46 Ft	50.46 Ft	47.93 Ft
8 In	8 In	8 In	8 In	8 In	8 In	8 In	8 In	8 In	8 In
2.00 Ft	2.00 Ft	2.00 Ft	3.00 Ft	3.00 Ft	2.00 Ft	2.00 Ft	2.00 Ft	2.00 Ft	2.00 Ft
12.00 Deg	14.37 Deg	42.65 Deg	0.00 Deg	25.85 Deg	0.00 Deg	26.03 Deg	0.00 Deg	24.72 Deg	45.00 Deg
2.04 Ft	2.06 Ft	2.72 Ft	3.00 Ft	3.33 Ft	2.00 Ft	2.23 Ft	2.00 Ft	2.20 Ft	2.83 Ft
52.25	52.25	50.02	50.12	50.05	49.59	49.50	49.29	49.29	46.76
50.41 ft	48.43 ft	48.65 ft	49.63 ft	47.66 ft	48.67 ft	46.60 ft	48.21 ft	45.61 ft	46.76 ft
48.37 Ft	46.37 Ft	45.93 Ft	46.63 Ft	44.33 Ft	46.67 Ft	44.37 Ft	46.21 Ft	43.41 Ft	43.93 Ft
12.00 cfs	12.00 cfs	3.00 cfs	40.00 cfs	40.00 cfs	19.50 cfs	19.50 cfs	18.50 cfs	18.50 cfs	6.00 cfs
50.52 Ft	50.51 Ft	45.79 Ft	47.41 Ft	47.40 Ft	47.31 Ft	47.29 Ft	47.20 Ft	47.18 Ft	44.29 Ft
3.82 Fps	3.82 Fps	0.96 Fps	5.66 Fps	5.66 Fps	6.21 Fps	6.21 Fps	5.89 Fps	5.89 Fps	1.91 Fps
0.22 Ft	0.22 Ft	0.01 Ft	0.49 Ft	0.49 Ft	0.59 Ft	0.59 Ft	0.53 Ft	0.53 Ft	0.06 Ft
0.00240 Ft/Ft	0.00240 Ft/Ft	0.00015 Ft/Ft	0.00306 Ft/Ft	0.00306 Ft/Ft	0.00633 Ft/Ft	0.00633 Ft/Ft	0.00570 Ft/Ft	0.00570 Ft/Ft	0.00060 Ft/Ft
0.50	0.50	0.50	0.50	0.50	0.50	0.50	0.50	0.50	0.50
1	1	1	1	1	1	1	1	1	1
0.07 Ft	0.04 Ft	0.00 Ft	0.07 Ft	0.05 Ft	0.15 Ft	0.09 Ft	0.13 Ft	0.08 Ft	0.00 Ft
0.11 Ft	0.11 Ft	0.01 Ft	0.25 Ft	0.25 Ft	0.30 Ft	0.30 Ft	0.27 Ft	0.27 Ft	0.03 Ft
0.22 Ft	0.22 Ft	0.01 Ft	0.49 Ft	0.49 Ft	0.59 Ft	0.59 Ft	0.53 Ft	0.53 Ft	0.06 Ft
0.40 Ft	0.37 Ft	0.02 Ft	0.81 Ft	0.78 Ft	1.03 Ft	0.98 Ft	0.93 Ft	0.88 Ft	0.09 Ft
50.92 Ft	50.88 Ft	45.81 Ft	48.22 Ft	48.18 Ft	48.34 Ft	48.27 Ft	48.13 Ft	48.06 Ft	44.38 Ft
12.00 cfs	12.00 cfs	3.00 cfs	40.00 cfs	40.00 cfs	19.50 cfs	19.50 cfs	18.50 cfs	18.50 cfs	6.00 cfs
2.12	2.12	0.53	2.57	2.57	3.45	3.45	3.27	3.27	1.06
0.85 Ft/Ft	0.85 Ft/Ft	0.34 Ft/Ft	0.95 Ft/Ft	0.95 Ft/Ft	1.11 Ft/Ft	1.11 Ft/Ft	1.09 Ft/Ft	1.09 Ft/Ft	0.56 Ft/Ft
50.07 Ft	48.07 Ft	46.60 Ft	49.48 Ft	47.18 Ft	48.90 Ft	46.60 Ft	48.39 Ft	45.59 Ft	45.04 Ft
50.92 Ft	50.88 Ft	46.60 Ft	49.48 Ft	48.18 Ft	48.90 Ft	48.27 Ft	48.39 Ft	48.06 Ft	45.04 Ft
1.83 Ft	1.87 Ft	3.92 Ft	1.14 Ft	2.37 Ft	1.19 Ft	1.73 Ft	1.40 Ft	1.73 Ft	2.22 Ft
0.40 Ft	0.37 Ft	0.81 Ft	2.07 Ft	0.78 Ft	1.59 Ft	0.98 Ft	1.19 Ft	0.88 Ft	0.75 Ft
0.51 Ft	2.45 Ft	-2.05 Ft	-0.15 Ft	0.52 Ft	0.23 Ft	1.67 Ft	0.18 Ft	2.45 Ft	-1.72 Ft
1.3193 %	2.0171 %	3.6931 %	8.4650 %	4.7424 %	6.4891 %	5.9374 %	4.8506 %	5.3440 %	10.7415 %

GROVERS AVENUE STORM DRAIN

Inlet 28	Inlet 29
rcp	rcp
0.012	0.012
24 In	24 In
8.40 Ft	40.00 Ft
8.40 Ft	38.00 Ft
1.00000 Ft/Ft	0.03550 Ft/Ft
47.54 Ft	46.00 Ft
8 In	0 In
2.00 Ft	2.00 Ft
45.00 Deg	2.03 Deg
2.83 Ft	2.00 Ft
46.37	45.50
46.37 ft	45.00 ft
43.54 Ft	43.00 Ft
7.00 cfs	3.00 cfs
44.04 Ft	44.70 Ft
2.23 Fps	0.96 Fps
0.08 Ft	0.01 Ft
0.00082 Ft/Ft	0.00015 Ft/Ft
0.50	0.50
1	1
0.01 Ft	0.01 Ft
0.04 Ft	0.01 Ft
0.08 Ft	0.01 Ft
0.12 Ft	0.03 Ft
44.16 Ft	44.73 Ft
7.00 cfs	3.00 cfs
1.24	0.53
0.61 Ft/Ft	0.34 Ft/Ft
44.77 Ft	43.67 Ft
44.77 Ft	44.73 Ft
2.11 Ft	1.27 Ft
0.73 Ft	0.03 Ft
-1.60 Ft	-0.27 Ft
8.6666 %	

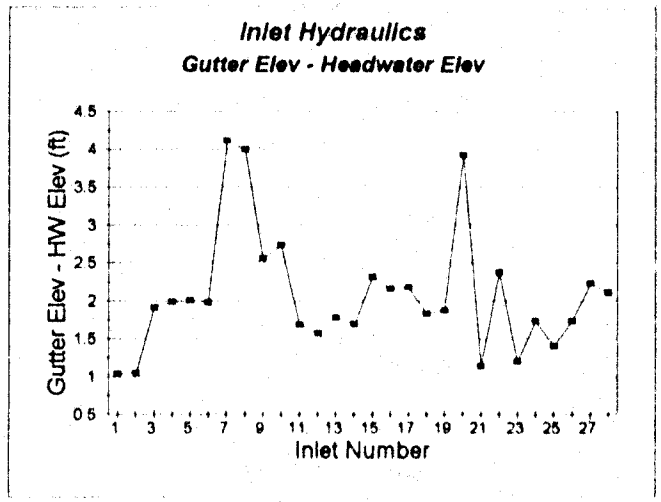

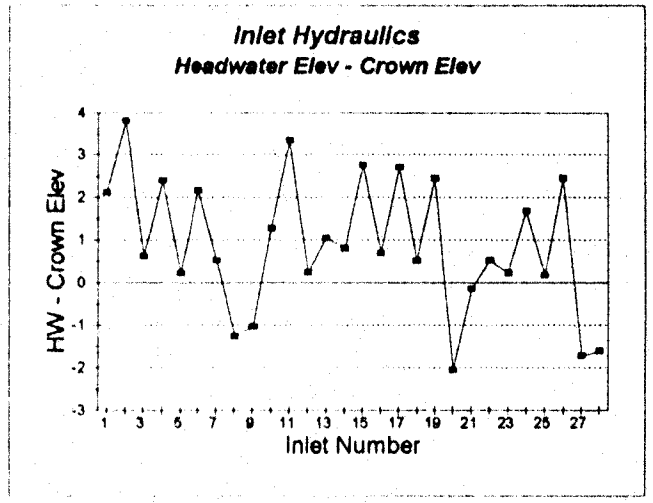

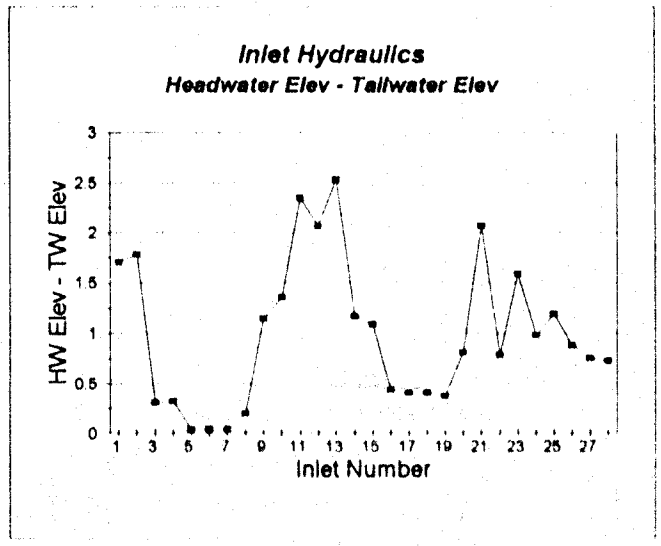

GROVERS AVENUE STORM DRAIN LATERAL — EK3098
MAIN LINE AND CONNECTOR PIPE CALCULATIONS — 09/26/94
LOADING ON RIGID CONCRETE PIPES. — BJF/KM
RE: Concrete Pipe Handbook, ACPA, 1988, Chapter 4.

INPUT DATA:				
PIPE RECORD NO.	ML 84" Max Cvr	ML 84" Min Cvr	ML 48" Max Cvr	ML 48" Min Cvr
Location:	Sta. 12+98	Sta. 26+46	Sta. 32+93	Sta. 26+46
Pipe material:	rcp	rcp	rcp	rcp
Internal Pipe diameter (D):	84 In	84 In	48 In	48 In
Wall thickness:	8 In	8 In	5 In	5 In
Outside Diameter (d):	8.33 Ft	8.33 Ft	4.83 Ft	4.83 Ft
Height of Cover (H):	10.09 Ft	7.74 Ft	8.45 Ft	7.7 Ft
Coefficient of Friction (u) :	0.6	0.6	0.6	0.6
Ku:	0.1924	0.1924	0.1924	0.1924
K :	0.32	0.32	0.32	0.32
Settlement Ratio (rsd):	0.7	0.7	0.7	0.7
Projection Ratio (p) =	1	1	1	1
Soil density (w):	140 Pcf	140 Pcf	140 Pcf	140 Pcf
Trench Bedding Factor (Bf):	1.9	1.9	1.9	1.9
Load Factor Parameters: N:	0.707	0.707	0.707	0.707
x:	0.638	0.638	0.638	0.638
Safety Factor (SF):	1	1	1	1
LIVE LOAD ON EFFECTIVE PLANE AT TOP OF PIPE (LL)(Pg. 4-38 - 4-43):				
Critical HS-20 loadi				
P = Point load =	48,000 Lbs	48,000 Lbs	48,000 Lbs	48,000 Lbs
IF = Impact factor =	1	1	1	1
L = Length of plane =	22.49 Ft	18.37 Ft	19.62 Ft	18.30 Ft
W = Width of plane =	23.33 Ft	19.21 Ft	20.46 Ft	19.14 Ft
Pavg = Average pressure actir				
= P * IF / W / L =	92 Psf	136 Psf	120 Psf	137 Psf
s = Effective width =	8.33 Ft	8.33 Ft	4.83 Ft	4.83 Ft
Wt = Active weight on pipe = Pavg * L * s =	17,234 Lbs	20,817 Lbs	11,370 Lbs	12,113 Lbs
Le = Effective supporting length of pipe				
= L + 1.75 * (.75 * d) =	33.42 Ft	29.31 Ft	25.96 Ft	24.65 Ft
LL = Wt / Le =	516 Lbs/Lf	710 Lbs/Lf	438 Lbs/Lf	491 Lbs/Lf
1. TRENCH CONDITIONS:				
DEAD LOAD (DL) (Pg. 4-4):				
Mimimum Trench Width =	10.33 Ft	10.33 Ft	6.83 Ft	6.83 Ft
Compute the transition width for trench loading = positive projecting loading using Fig. 4.11, page 4-17,				
rsd * p = Settlement * Projection ratio =	0.7	0.7	0.7	0.7
H/d = Height of cover / diameter =	1.21	0.93	1.75	1.59
Cc = Load coeficient, positive projection =	1.91	1.46	2.75	2.51
Try Transition Width (tw) =	14.91 Ft	14.52 Ft	9.06 Ft	8.94 Ft
j = 2*ku/*H/tw =	0.26	0.21	0.36	0.33
err = (1-exp(-j))*tw^2/(2*ku)-Cc*d^2 =	0.00	-0.00	0.00	0.00
Design Width (b) =	14.91 Ft	14.52 Ft	9.06 Ft	8.94 Ft
Cd = (1-exp(-2*ku/*H/b))/(2*ku') =	0.60	0.48	0.78	0.73
DL = Cd * w * b^2 =	18,543 Lbs/Lf	14,224 Lbs/Lf	9,007 Lbs/Lf	8,207 Lbs/Lf
TOTAL LOAD (TL):				
TL = LL + DL =	19,059 Lbs/Lf	14,934 Lbs/Lf	9,445 Lbs/Lf	8,698 Lbs/Lf
MINIMUM REQUIRED PIPE STRENGTH (4-67 - 4-68):				
Safety Factor (SF) =	1	1	1	1
Bedding Factor (BF) =	1.9	1.9	1.9	1.9
D-LOAD = TL / BF * SF / (D/12) =	1,450 Lbs/Lf/Dia.Ft.	1,150 Lbs/Lf/Dia.Ft.	1,250 Lbs/Lf/Dia.Ft.	1,150 Lbs/Lf/Dia
2. POSITIVE PROJECTION CONDITIONS (4-12, 4-17):				
DEAD LOAD (DL):				
H/d =	1.21	0.93	1.75	1.59
Cc = Load coeficient, positive projection =	1.91	1.46	2.75	2.51
DL = Cc * w * d^2 =	18,543 Lbs/Lf	14,224 Lbs/Lf	9,007 Lbs/Lf	8,207 Lbs/Lf
TOTAL LOAD (TL):				
TL = LL + DL =	19,059 Lbs/Lf	14,934 Lbs/Lf	9,445 Lbs/Lf	8,698 Lbs/Lf
MINIMUM REQUIRED PIPE STRENGTH (4-67 - 4-68)				
Safety Factor (SF) = 1				
Load Factor (LF): (pg 4-63 - 4-64)				
LF = 1.431/(N-xq)				
Where: N =	0.707	0.707	0.707	0.707
x =	0.638	0.638	0.638	0.638
q = pK/Cc(H/d+p/2) =	0.29	0.31	0.26	0.27
LF =	2.73	2.82	2.65	2.67
D-Load = TL / LF* SF / (D/12) =	1,000 Lbs/Lf/Dia.Ft.	50 Lbs/Lf/Dia.Ft.	50 Lbs/Lf/Dia.Ft.	50 Lbs/Lf/Dia

For design use the greater of D-Loads for trench and positive projecting conditions,

D-Load =	1,450 Lbs/Lf/Dia.Ft.	1,150 Lbs/Lf/Dia.Ft.	1,250 Lbs/Lf/Dia.Ft.	1,150 Lbs/L

	ML 42" Max Cvr	ML 42" Min Cvr	26th 60" Max Cvr	26th 60" Min Cvr	28th 84" Max Cvr	28th 84" M
	Sta. 38+00	Sta. 43+37	Sta. 1+04	Sta. 2+39	Sta. 1+03	Sta. 2+62
	rcp	rcp	rcp	rcp	rcp	rcp
	42 In	42 In	60 In	60 In	84 In	84
	4.5 In	4.5 In	6 In	6 In	8 In	8
	4.25 Ft	4.25 Ft	6.00 Ft	6.00 Ft	8.33 Ft	8.33
	8.8 Ft	8.42 Ft	11.59 Ft	10 Ft	7.66 Ft	6.64
	0.6	0.6	0.6	0.6	0.6	0.6
	0.1924	0.1924	0.1924	0.1924	0.1924	0.1924
	0.32	0.32	0.32	0.32	0.32	0.32
	0.7	0.7	0.7	0.7	0.7	0.7
	1	1	1	1	1	1
	140 Pcf	140 Pcf	140 Pcf	140 Pcf	140 Pcf	140
	1.9	1.9	1.9	1.9	1.9	1.9
	0.707	0.707	0.707	0.707	0.707	0.707
	0.638	0.638	0.638	0.638	0.638	0.638
	1	1	1	1	1	1
	48,000 Lbs	48,000 Lbs	48,000 Lbs	48,000 Lbs	48,000 Lbs	48,000
	1	1	1	1	1	1
	20.23 Ft	19.56 Ft	25.11 Ft	22.33 Ft	18.23 Ft	16.45
	21.07 Ft	20.40 Ft	25.95 Ft	23.17 Ft	19.07 Ft	17.29
	113 Psf	120 Psf	74 Psf	93 Psf	138 Psf	169
	4.25 Ft	4.25 Ft	6.00 Ft	6.00 Ft	8.33 Ft	8.33
	9,715 Lbs	9,978 Lbs	11,150 Lbs	12,460 Lbs	20,962 Lbs	23,158
	25.81 Ft	25.14 Ft	32.99 Ft	30.2 Ft	29.17 Ft	27.39
	376 Lbs/Lf	397 Lbs/Lf	338 Lbs/Lf	413 Lbs/Lf	719 Lbs/Lf	845
	6.25 Ft	6.25 Ft	8.00 Ft	8.00 Ft	10.33 Ft	10.33
	0.7	0.7	0.7	0.7	0.7	0.7
	2.07	1.98	1.93	1.67	0.92	0.80
	3.26	3.12	3.04	2.63	1.45	1.26
	8.18 Ft	8.12 Ft	11.42 Ft	11.17 Ft	14.51 Ft	14.33
	0.41	0.40	0.39	0.34	0.20	0.18
	0.00	0.00	0.00	0.00	-0.00	-0.00
	8.18 Ft	8.12 Ft	11.42 Ft	11.17 Ft	14.51 Ft	14.33
	0.88	0.86	0.84	0.76	0.48	0.42
	8,248 Lbs/Lf	7,892 Lbs/Lf	15,336 Lbs/Lf	13,232 Lbs/Lf	14,077 Lbs/Lf	12,203
	8,624 Lbs/Lf	8,289 Lbs/Lf	15,674 Lbs/Lf	13,645 Lbs/Lf	14,796 Lbs/Lf	13,048
	1	1	1	1	1	1
	1.9	1.9	1.9	1.9	1.9	1.9
Ft.	1,300 Lbs/Lf/Dia.Ft.	1,250 Lbs/Lf/Dia.Ft.	1,650 Lbs/Lf/Dia.Ft.	1,450 Lbs/Lf/Dia.Ft.	1,150 Lbs/Lf/Dia.Ft.	1,000
	2.07	1.98	1.93	1.67	0.92	0.80
	3.26	3.12	3.04	2.63	1.45	1.26
	8,248 Lbs/Lf	7,892 Lbs/Lf	15,336 Lbs/Lf	13,232 Lbs/Lf	14,077 Lbs/Lf	12,203
	8,624 Lbs/Lf	8,289 Lbs/Lf	15,674 Lbs/Lf	13,645 Lbs/Lf	14,796 Lbs/Lf	13,048
	0.707	0.707	0.707	0.707	0.707	0.707
	0.638	0.638	0.638	0.638	0.638	0.638
	0.25	0.25	0.26	0.26	0.31	0.33
	2.62	2.63	2.63	2.66	2.83	2.89
.Ft.	50 Lbs/Lf/Dia.Ft.	50 Lbs/Lf/Dia.Ft.	50 Lbs/Lf/Dia.Ft.	50 Lbs/Lf/Dia.Ft.	50 Lbs/Lf/Dia.Ft.	50
f/Dia.Ft.	1,300 Lbs/Lf/Dia.Ft.	1,250 Lbs/Lf/Dia.Ft.	1,650 Lbs/Lf/Dia.Ft.	1,450 Lbs/Lf/Dia.Ft.	1,150 Lbs/Lf/Dia.Ft.	1,000

Min Cvr	28th 60" Max Cvr Sta. 2+62 rcp	28th 60" Min Cvr Sta. 4+06 rcp	29th 24" Max Cvr Sta. 0+96 rcp	29th 24" Min Cvr Sta. 1+26 rcp	30th 48" Max Cvr Sta. 0+96 rcp
In	60 In	60 In	24 In	24 In	48 In
In	6 In	6 In	3 In	3 In	5 In
Ft	6.00 Ft	6.00 Ft	2.50 Ft	2.50 Ft	4.83 Ft
Ft	6.64 Ft	5.36 Ft	8.45 Ft	7.5 Ft	7.95 Ft
	0.6	0.6	0.6	0.6	0.6
	0.1924	0.1924	0.1924	0.1924	0.1924
	0.32	0.32	0.32	0.32	0.32
	0.7	0.7	0.7	0.7	0.7
	1	1	1	1	1
Pcf	140 Pcf	140 Pcf	140 Pcf	140 Pcf	140 Pcf
	1.9	1.9	1.9	1.9	1.9
	0.707	0.707	0.707	0.707	0.707
	0.638	0.638	0.638	0.638	0.638
	1	1	1	1	1
Lbs	48,000 Lbs	48,000 Lbs	48,000 Lbs	48,000 Lbs	48,000 Lbs
	1	1	1	1	1
Ft	16.45 Ft	14.21 Ft	19.62 Ft	17.95 Ft	18.74 Ft
Ft	17.29 Ft	15.05 Ft	20.46 Ft	18.79 Ft	19.58 Ft
Psf	169 Psf	224 Psf	120 Psf	142 Psf	131 Psf
Ft	6.00 Ft	6.00 Ft	2.50 Ft	2.50 Ft	4.83 Ft
Lbs	16,680 Lbs	19,098 Lbs	5,885 Lbs	6,374 Lbs	11,859 Lbs
Ft	24.32 Ft	22.08 Ft	22.9 Ft	21.24 Ft	25.09 Ft
Lbs/Lf	686 Lbs/Lf	865 Lbs/Lf	257 Lbs/Lf	300 Lbs/Lf	473 Lbs/Lf
Ft	8.00 Ft	8.00 Ft	3.83 Ft	3.83 Ft	6.83 Ft
	0.7	0.7	0.7	0.7	0.7
	1.11	0.89	3.38	3.00	1.64
	1.74	1.41	5.32	4.73	2.59
Ft	10.63 Ft	10.42 Ft	5.28 Ft	5.15 Ft	8.98 Ft
	0.24	0.20	0.62	0.56	0.34
	0.00	0.00	0.00	0.00	0.00
Ft	10.63 Ft	10.42 Ft	5.28 Ft	5.15 Ft	8.98 Ft
	0.56	0.47	1.20	1.12	0.75
Lbs/Lf	8,786 Lbs/Lf	7,092 Lbs/Lf	4,659 Lbs/Lf	4,135 Lbs/Lf	8,474 Lbs/Lf
Lbs/Lf	9,472 Lbs/Lf	7,957 Lbs/Lf	4,916 Lbs/Lf	4,435 Lbs/Lf	8,947 Lbs/Lf
	1	1	1	1	1
	1.9	1.9	1.9	1.9	1.9
Lbs/Lf/Dia.Ft.	1,000 Lbs/Lf/Dia.Ft.	850 Lbs/Lf/Dia.Ft.	1,300 Lbs/Lf/Dia.Ft.	1,200 Lbs/Lf/Dia.Ft.	1,200 Lbs/Lf/Dia.Ft.
	1.11	0.89	3.38	3.00	1.64
	1.74	1.41	5.32	4.73	2.59
Lbs/Lf	8,786 Lbs/Lf	7,092 Lbs/Lf	4,659 Lbs/Lf	4,135 Lbs/Lf	8,474 Lbs/Lf
Lbs/Lf	9,472 Lbs/Lf	7,957 Lbs/Lf	4,916 Lbs/Lf	4,435 Lbs/Lf	8,947 Lbs/Lf
	0.707	0.707	0.707	0.707	0.707
	0.638	0.638	0.638	0.638	0.638
	0.30	0.32	0.23	0.24	0.27
	2.76	2.84	2.56	2.58	2.66
Lbs/Lf/Dia.Ft.	50 Lbs/Lf/Dia.Ft.	50 Lbs/Lf/Dia.Ft.	50 Lbs/Lf/Dia.Ft.	50 Lbs/Lf/Dia.Ft.	50 Lbs/Lf/Dia.Ft.
Lbs/Lf/Dia.Ft.	1,000 Lbs/Lf/Dia.Ft.	850 Lbs/Lf/Dia.Ft.	1,300 Lbs/Lf/Dia.Ft.	1,200 Lbs/Lf/Dia.Ft.	1,200 Lbs/Lf/Dia.Ft.

30th 48" Min Cvr	CP 1 Max Cvr	CP 1 Min Cvr	CP 2 Max Cvr	CP 2 Min Cvr	CP 3 Max Cvr
Sta. 2+35	Sta. 2+30	Sta. 2+30	Sta. 2+35	Sta. 2+35	Sta. 1+96
rcp	rcp	rcp	rcp	rcp	rcp
48 In	24 In	24 In	24 In	24 In	24 In
5 In	3 In	3 In	3 In	3 In	3 In
4.83 Ft	2.50 Ft	2.50 Ft	2.50 Ft	2.50 Ft	2.50 Ft
7.24 Ft	7.94 Ft	3.48 Ft	7.99 Ft	5.17 Ft	7.53 Ft
0.6	0.6	0.6	0.6	0.6	0.6
0.1924	0.1924	0.1924	0.1924	0.1924	0.1924
0.32	0.32	0.32	0.32	0.32	0.32
0.7	0.7	0.7	0.7	0.7	0.7
1	1	1	1	1	1
140 Pcf	140 Pcf	140 Pcf	140 Pcf	140 Pcf	140 Pcf
1.9	1.9	1.9	1.9	1.9	1.9
0.707	0.707	0.707	0.707	0.707	0.707
0.638	0.638	0.638	0.638	0.638	0.638
1	1	1	1	1	1
48,000 Lbs	48,000 Lbs	32,000 Lbs	48,000 Lbs	48,000 Lbs	48,000 Lbs
1	1	1	1	1	1
17.50 Ft	18.72 Ft	6.92 Ft	18.81 Ft	13.88 Ft	18.01 Ft
18.34 Ft	19.56 Ft	11.76 Ft	19.65 Ft	14.72 Ft	18.85 Ft
150 Psf	131 Psf	393 Psf	130 Psf	235 Psf	141 Psf
4.83 Ft	2.50 Ft	2.50 Ft	2.50 Ft	2.50 Ft	2.50 Ft
12,679 Lbs	6,132 Lbs	6,799 Lbs	6,114 Lbs	8,153 Lbs	6,348 Lbs
23.84 Ft	22.01 Ft	10.2 Ft	22.09 Ft	17.16 Ft	21.29 Ft
532 Lbs/Lf	279 Lbs/Lf	667 Lbs/Lf	277 Lbs/Lf	475 Lbs/Lf	298 Lbs/Lf
6.83 Ft	3.83 Ft	3.83 Ft	3.83 Ft	3.83 Ft	3.83 Ft
0.7	0.7	0.7	0.7	0.7	0.7
1.50	3.18	1.39	3.20	2.07	3.01
2.36	5.00	2.19	5.03	3.26	4.74
8.87 Ft	5.21 Ft	4.55 Ft	6.96 Ft	6.52 Ft	5.15 Ft
0.31	0.59	0.29	0.44	0.31	0.56
0.00	0.00	0.00	13.51	8.67	0.00
8.87 Ft	5.21 Ft	4.55 Ft	6.96 Ft	6.52 Ft	5.15 Ft
0.70	1.15	0.66	0.93	0.68	1.12
7,717 Lbs/Lf	4,378 Lbs/Lf	1,919 Lbs/Lf	6,297 Lbs/Lf	4,064 Lbs/Lf	4,151 Lbs/Lf
6,249 Lbs/Lf	4,657 Lbs/Lf	2,586 Lbs/Lf	6,574 Lbs/Lf	4,539 Lbs/Lf	4,449 Lbs/Lf
1	1	1	1	1	1
1.9	1.9	1.9	1.9	1.9	1.9
1,100 Lbs/Lf/Dia.Ft.	1,250 Lbs/Lf/Dia.Ft.	700 Lbs/Lf/Dia.Ft.	1,750 Lbs/Lf/Dia.Ft.	1,200 Lbs/Lf/Dia.Ft.	1,200 Lbs/Lf/Dia
1.50	3.18	1.39	3.20	2.07	3.01
2.36	5.00	2.19	5.03	3.26	4.74
7,717 Lbs/Lf	4,377 Lbs/Lf	1,919 Lbs/Lf	4,405 Lbs/Lf	2,850 Lbs/Lf	4,151 Lbs/Lf
8,249 Lbs/Lf	4,656 Lbs/Lf	2,586 Lbs/Lf	4,682 Lbs/Lf	3,325 Lbs/Lf	4,449 Lbs/Lf
0.707	0.707	0.707	0.707	0.707	0.707
0.638	0.638	0.638	0.638	0.638	0.638
0.27	0.24	0.28	0.24	0.25	0.24
2.68	2.57	2.70	2.57	2.62	2.58
50 Lbs/Lf/Dia.Ft.	50 Lbs/Lf/Dia.Ft.	50 Lbs/Lf/Dia.Ft.	50 Lbs/Lf/Dia.Ft.	50 Lbs/Lf/Dia.Ft.	50 Lbs/Lf/Dia
1,100 Lbs/Lf/Dia.Ft.	1,250 Lbs/Lf/Dia.Ft.	700 Lbs/Lf/Dia.Ft.	1,750 Lbs/Lf/Dia.Ft.	1,200 Lbs/Lf/Dia.Ft.	1,200 Lbs/L

	CP 3 Min Cvr	CP 4 Max Cvr	CP 4 Min Cvr	CP 5 Max Cvr	CP 5 Min Cvr	CP 6 Max
	Sta. 1+96	Sta. 2+01	Sta. 2+01	Sta. 1+62	Sta. 1+62	Sta. 1+67
	rcp	rcp	rcp	rcp	rcp	rcp
	24 In	24 In	24 In	24 In	24 In	24
	3 In	3 In	3 In	3 In	3 In	3
	2.50 Ft	2.50 Ft	2.50 Ft	2.50 Ft	2.50 Ft	2.50
	2.85 Ft	7.6 Ft	4.68 Ft	7.49 Ft	2.58 Ft	7.46
	0.6	0.6	0.6	0.6	0.6	0.6
	0.1924	0.1924	0.1924	0.1924	0.1924	0.1924
	0.32	0.32	0.32	0.32	0.32	0.32
	0.7	0.7	0.7	0.7	0.7	0.7
	1	1	1	1	1	1
	140 Pcf	140 Pcf	140 Pcf	140 Pcf	140 Pcf	140
	1.9	1.9	1.9	1.9	1.9	1.9
	0.707	0.707	0.707	0.707	0.707	0.707
	0.638	0.638	0.638	0.638	0.638	0.638
	1	1	1	1	1	1
	32,000 Lbs	48,000 Lbs	48,000 Lbs	48,000 Lbs	32,000 Lbs	48,000
	1.1	1	1	1	1.1	1
	5.82 Ft	18.13 Ft	13.02 Ft	17.94 Ft	5.34 Ft	17.88
	10.66 Ft	18.97 Ft	13.86 Ft	18.78 Ft	10.18 Ft	18.72
	568 Psf	140 Psf	266 Psf	143 Psf	647 Psf	143
	2.50 Ft	2.50 Ft	2.50 Ft	2.50 Ft	2.50 Ft	2.50
	8,261 Lbs	6,345 Lbs	8,658 Lbs	6,413 Lbs	8,646 Lbs	6,394
	9.1 Ft	21.41 Ft	16.3 Ft	21.22 Ft	8.63 Ft	21.17
	908 Lbs/Lf	296 Lbs/Lf	531 Lbs/Lf	302 Lbs/Lf	1,002 Lbs/Lf	302
	3.83 Ft	3.83 Ft	3.83 Ft	3.83 Ft	3.83 Ft	3.83
	0.7	0.7	0.7	0.7	0.7	0.7
	1.14	3.04	1.87	3.00	1.03	2.98
	1.80	4.79	2.95	4.72	1.63	4.70
	4.44 Ft	5.16 Ft	4.73 Ft	5.14 Ft	4.40 Ft	5.14
	0.25	0.57	0.38	0.56	0.23	0.56
	0.00	0.00	0.00	0.00	0.00	0.00
	4.44 Ft	5.16 Ft	4.73 Ft	5.14 Ft	4.40 Ft	5.14
	0.57	1.12	0.82	1.11	0.53	1.11
	1,571 Lbs/Lf	4,190 Lbs/Lf	2,580 Lbs/Lf	4,129 Lbs/Lf	1,422 Lbs/Lf	4,113
	2,479 Lbs/Lf	4,486 Lbs/Lf	3,111 Lbs/Lf	4,431 Lbs/Lf	2,424 Lbs/Lf	4,415
	1	1	1	1	1	1
	1.9	1.9	1.9	1.9	1.9	1.9
.Ft.	700 Lbs/Lf/Dia.Ft.	1,200 Lbs/Lf/Dia.Ft.	850 Lbs/Lf/Dia.Ft.	1,200 Lbs/Lf/Dia.Ft.	650 Lbs/Lf/Dia.Ft.	1,200
	1.14	3.04	1.87	3.00	1.03	2.98
	1.80	4.79	2.95	4.72	1.63	4.70
	1,571 Lbs/Lf	4,190 Lbs/Lf	2,580 Lbs/Lf	4,129 Lbs/Lf	1,422 Lbs/Lf	4,113
	2,479 Lbs/Lf	4,486 Lbs/Lf	3,111 Lbs/Lf	4,431 Lbs/Lf	2,424 Lbs/Lf	4,415
	0.707	0.707	0.707	0.707	0.707	0.707
	0.638	0.638	0.638	0.638	0.638	0.638
	0.29	0.24	0.26	0.24	0.30	0.24
	2.75	2.57	2.64	2.58	2.78	2.58
.Ft.	50 Lbs/Lf/Dia.Ft.	50 Lbs/Lf/Dia.Ft.	50 Lbs/Lf/Dia.Ft.	50 Lbs/Lf/Dia.Ft.	50 Lbs/Lf/Dia.Ft.	50
f/Dia.Ft.	700 Lbs/Lf/Dia.Ft.	1,200 Lbs/Lf/Dia.Ft.	850 Lbs/Lf/Dia.Ft.	1,200 Lbs/Lf/Dia.Ft.	650 Lbs/Lf/Dia.Ft.	1,200

Cvr	CP 6 Min Cvr		CP 7 Max Cvr		CP 7 Min Cvr		CP 8 Max Cvr		CP 8 Min Cvr	
	Sta. 1+67		Sta. 1+55		Sta. 1+55		Sta. 1+55		Sta. 1+55	
	rcp		rcp		rcp		rcp		rcp	
In	24	In	24	In	24	In	24	In	24	In
In	3	In	3	In	3	In	3	In	3	In
Ft	2.50	Ft	2.50	Ft	2.50	Ft	2.50	Ft	2.50	Ft
Ft	4.45	Ft	7.24	Ft	4.81	Ft	7.28	Ft	3	Ft
	0.6		0.6		0.6		0.6		0.6	
	0.1924		0.1924		0.1924		0.1924		0.1924	
	0.32		0.32		0.32		0.32		0.32	
	0.7		0.7		0.7		0.7		0.7	
	1		1		1		1		1	
Pcf	140	Pcf	140	Pcf	140	Pcf	140	Pcf	140	Pcf
	1.9		1.9		1.9		1.9		1.9	
	0.707		0.707		0.707		0.707		0.707	
	0.638		0.638		0.638		0.638		0.638	
	1		1		1		1		1	
Lbs	48,000	Lbs	48,000	Lbs	48,000	Lbs	48,000	Lbs	32,000	Lbs
	1		1		1		1		1.1	
Ft	12.62	Ft	17.50	Ft	13.25	Ft	17.57	Ft	6.08	Ft
Ft	13.46	Ft	18.34	Ft	14.09	Ft	18.41	Ft	10.92	Ft
Psf	283	Psf	150	Psf	257	Psf	148	Psf	530	Psf
Ft	2.50	Ft	2.50	Ft	2.50	Ft	2.50	Ft	2.50	Ft
Lbs	8,927	Lbs	6,562	Lbs	8,512	Lbs	6,501	Lbs	8,056	Lbs
Ft	15.9	Ft	20.78	Ft	16.53	Ft	20.85	Ft	9.36	Ft
Lbs/Lf	561	Lbs/Lf	316	Lbs/Lf	515	Lbs/Lf	312	Lbs/Lf	861	Lbs/Lf
Ft	3.83	Ft	3.83	Ft	3.83	Ft	3.83	Ft	3.83	Ft
	0.7		0.7		0.7		0.7		0.7	
	1.78		2.90		1.92		2.91		1.20	
	2.80		4.56		3.03		4.59		1.89	
Ft	4.70	Ft	5.11	Ft	4.75	Ft	5.11	Ft	4.47	Ft
	0.36		0.55		0.39		0.55		0.26	
	0.00		0.00		0.00		0.00		0.00	
Ft	4.70	Ft	5.11	Ft	4.75	Ft	5.11	Ft	4.47	Ft
	0.79		1.09		0.84		1.10		0.59	
Lbs/Lf	2,453	Lbs/Lf	3,992	Lbs/Lf	2,652	Lbs/Lf	4,014	Lbs/Lf	1,654	Lbs/Lf
Lbs/Lf	3,014	Lbs/Lf	4,308	Lbs/Lf	3,167	Lbs/Lf	4,326	Lbs/Lf	2,515	Lbs/Lf
	1		1		1		1		1	
	1.9		1.9		1.9		1.9		1.9	
Lbs/Lf/Dia.Ft.	800	Lbs/Lf/Dia.Ft.	1,150	Lbs/Lf/Dia.Ft.	850	Lbs/Lf/Dia.Ft.	1,150	Lbs/Lf/Dia.Ft.	700	Lbs/Lf/Dia.Ft.
	1.78		2.90		1.92		2.91		1.20	
	2.80		4.56		3.03		4.59		1.89	
Lbs/Lf	2,453	Lbs/Lf	3,992	Lbs/Lf	2,652	Lbs/Lf	4,014	Lbs/Lf	1,654	Lbs/Lf
Lbs/Lf	3,014	Lbs/Lf	4,308	Lbs/Lf	3,167	Lbs/Lf	4,326	Lbs/Lf	2,515	Lbs/Lf
	0.707		0.707		0.707		0.707		0.707	
	0.638		0.638		0.638		0.638		0.638	
	0.26		0.24		0.26		0.24		0.29	
	2.65		2.58		2.63		2.58		2.74	
Lbs/Lf/Dia.Ft.	50	Lbs/Lf/Dia.Ft.	50	Lbs/Lf/Dia.Ft.	50	Lbs/Lf/Dia.Ft.	50	Lbs/Lf/Dia.Ft.	50	Lbs/Lf/Dia.Ft.
Lbs/Lf/Dia.Ft.	800	Lbs/Lf/Dia.Ft.	1,150	Lbs/Lf/Dia.Ft.	850	Lbs/Lf/Dia.Ft.	1,150	Lbs/Lf/Dia.Ft.	700	Lbs/Lf/Dia.Ft.

CP 9 Max Cvr	CP 9 Min Cvr	CP 10 Max Cvr	CP 10 Min Cvr	CP 11 Max Cvr	CP 11 Min Cvr
Sta. 27+23	Sta. 27+23	Sta. 4+03	Sta. 4+03	Sta. 3+69	Sta. 3+69
rcp	rcp	rcp	rcp	rcp	rcp
24 In	24 In	36 In	36 In	24 In	24 In
3 In	3 In	4 In	4 In	3 In	3 In
2.50 Ft	2.50 Ft	3.67 Ft	3.67 Ft	2.50 Ft	2.50 Ft
8.49 Ft	1.54 Ft	5.72 Ft	4.18 Ft	6.58 Ft	5.2 Ft
0.6	0.6	0.6	0.6	0.6	0.6
0.1924	0.1924	0.1924	0.1924	0.1924	0.1924
0.32	0.32	0.32	0.32	0.32	0.32
0.7	0.7	0.7	0.7	0.7	0.7
1	1	1	1	1	1
140 Pcf	140 Pcf	140 Pcf	140 Pcf	140 Pcf	140 Pcf
1.9	1.9	1.9	1.9	1.9	1.9
0.707	0.707	0.707	0.707	0.707	0.707
0.638	0.638	0.638	0.638	0.638	0.638
1	1	1	1	1	1
48,000 Lbs	32,000 Lbs	48,000 Lbs	48,000 Lbs	48,000 Lbs	48,000 Lbs
1	1.2	1	1	1	1
19.69 Ft	3.52 Ft	14.84 Ft	12.14 Ft	16.34 Ft	13.93 Ft
20.53 Ft	8.36 Ft	15.68 Ft	12.98 Ft	17.18 Ft	14.77 Ft
119 Psf	1302 Psf	206 Psf	304 Psf	171 Psf	233 Psf
2.50 Ft	2.50 Ft	3.67 Ft	3.67 Ft	2.50 Ft	2.50 Ft
5,857 Lbs	11,474 Lbs	11,219 Lbs	13,550 Lbs	6,987 Lbs	8,114 Lbs
22.97 Ft	6.81 Ft	19.65 Ft	16.96 Ft	19.63 Ft	17.21 Ft
255 Lbs/Lf	1,685 Lbs/Lf	571 Lbs/Lf	799 Lbs/Lf	356 Lbs/Lf	471 Lbs/Lf
3.83 Ft	3.83 Ft	5.67 Ft	5.67 Ft	3.83 Ft	3.83 Ft
0.7	0.7	0.7	0.7	0.7	0.7
3.40	0.62	1.56	1.14	2.63	2.08
5.35	0.97	2.46	1.80	4.15	3.28
5.28 Ft	4.22 Ft	6.77 Ft	6.52 Ft	5.02 Ft	4.81 Ft
0.62	0.14	0.33	0.25	0.50	0.42
-0.00	0.00	0.00	0.00	0.00	0.00
5.28 Ft	4.22 Ft	6.77 Ft	6.52 Ft	5.02 Ft	4.81 Ft
1.20	0.34	0.72	0.57	1.03	0.88
4,681 Lbs/Lf	849 Lbs/Lf	4,625 Lbs/Lf	3,380 Lbs/Lf	3,628 Lbs/Lf	2,867 Lbs/Lf
4,936 Lbs/Lf	2,534 Lbs/Lf	5,196 Lbs/Lf	4,179 Lbs/Lf	3,984 Lbs/Lf	3,338 Lbs/Lf
1	1	1	1	1	1
1.9	1.9	1.9	1.9	1.9	1.9
1,300 Lbs/Lf/Dia.Ft.	700 Lbs/Lf/Dia.Ft.	950 Lbs/Lf/Dia.Ft.	750 Lbs/Lf/Dia.Ft.	1,050 Lbs/Lf/Dia.Ft.	900 Lbs/Lf/Dia
3.40	0.62	1.56	1.14	2.63	2.08
5.35	0.97	2.46	1.80	4.15	3.28
4,681 Lbs/Lf	849 Lbs/Lf	4,625 Lbs/Lf	3,380 Lbs/Lf	3,628 Lbs/Lf	2,867 Lbs/Lf
4,936 Lbs/Lf	2,534 Lbs/Lf	5,196 Lbs/Lf	4,179 Lbs/Lf	3,984 Lbs/Lf	3,338 Lbs/Lf
0.707	0.707	0.707	0.707	0.707	0.707
0.638	0.638	0.638	0.638	0.638	0.638
0.23	0.37	0.27	0.29	0.24	0.25
2.56	3.03	2.67	2.75	2.59	2.62
50 Lbs/Lf/Dia.Ft.	50 Lbs/Lf/Dia.Ft.	50 Lbs/Lf/Dia.Ft.	50 Lbs/Lf/Dia.Ft.	50 Lbs/Lf/Dia.Ft.	50 Lbs/Lf/Dia
1,300 Lbs/Lf/Dia.Ft.	700 Lbs/Lf/Dia.Ft.	950 Lbs/Lf/Dia.Ft.	750 Lbs/Lf/Dia.Ft.	1,050 Lbs/Lf/Dia.Ft.	900 Lbs/L

	CP 12 Max Cvr	CP 12 Min Cvr	CP 13 Max Cvr	CP 13 Min Cvr	CP 14 Max Cvr	CP 14 Mir
	Sta. 3+14	Sta. 3+14	Sta. 2+80	Sta. 2+80	Sta. 2+46	Sta. 2+46
	rcp	rcp	rcp	rcp	rcp	rcp
	36 In	36 In	24 In	24 In	24 In	24
	4 In	4 In	3 In	3 In	3 In	3
	3.67 Ft	3.67 Ft	2.50 Ft	2.50 Ft	2.50 Ft	2.50
	6.38 Ft	2.05 Ft	7.97 Ft	3.05 Ft	8.06 Ft	2.7
	0.6	0.6	0.6	0.6	0.6	0.6
	0.1924	0.1924	0.1924	0.1924	0.1924	0.1924
	0.32	0.32	0.32	0.32	0.32	0.32
	0.7	0.7	0.7	0.7	0.7	0.7
	1	1	1	1	1	1
	140 Pcf	140 Pcf	140 Pcf	140 Pcf	140 Pcf	140
	1.9	1.9	1.9	1.9	1.9	1.9
	0.707	0.707	0.707	0.707	0.707	0.707
	0.638	0.638	0.638	0.638	0.638	0.638
	1	1	1	1	1	1
	48,000 Lbs	32,000 Lbs	48,000 Lbs	32,000 Lbs	48,000 Lbs	32,000
	1	1.1	1	1	1	1.1
	15.99 Ft	4.42 Ft	18.78 Ft	6.17 Ft	18.93 Ft	5.55
	16.83 Ft	9.26 Ft	19.62 Ft	11.01 Ft	19.77 Ft	10.39
	178 Psf	861 Psf	130 Psf	471 Psf	128 Psf	610
	3.67 Ft	3.67 Ft	2.50 Ft	2.50 Ft	2.50 Ft	2.50
	10,449 Lbs	13,959 Lbs	6,103 Lbs	7,262 Lbs	6,059 Lbs	8,471
	20.81 Ft	9.23 Ft	22.06 Ft	9.45 Ft	22.22 Ft	8.84
	502 Lbs/Lf	1,512 Lbs/Lf	277 Lbs/Lf	768 Lbs/Lf	273 Lbs/Lf	958
	5.67 Ft	5.67 Ft	3.83 Ft	3.83 Ft	3.83 Ft	3.83
	0.7	0.7	0.7	0.7	0.7	0.7
	1.74	0.56	3.19	1.22	3.22	1.08
	2.74	0.88	5.02	1.92	5.08	1.70
	6.87 Ft	6.15 Ft	5.21 Ft	4.48 Ft	5.22 Ft	4.42
	0.36	0.13	0.59	0.26	0.59	0.24
	0.00	0.00	0.00	0.00	0.00	0.00
	6.87 Ft	6.15 Ft	5.21 Ft	4.48 Ft	5.22 Ft	4.42
	0.78	0.31	1.16	0.60	1.16	0.54
	5,159 Lbs/Lf	1,658 Lbs/Lf	4,394 Lbs/Lf	1,682 Lbs/Lf	4,444 Lbs/Lf	1,489
	5,661 Lbs/Lf	3,170 Lbs/Lf	4,671 Lbs/Lf	2,450 Lbs/Lf	4,717 Lbs/Lf	2,447
	1	1	1	1	1	1
	1.9	1.9	1.9	1.9	1.9	1.9
.Ft.	1,000 Lbs/Lf/Dia.Ft.	600 Lbs/Lf/Dia.Ft.	1,250 Lbs/Lf/Dia.Ft.	650 Lbs/Lf/Dia.Ft.	1,250 Lbs/Lf/Dia.Ft.	650
	1.74	0.56	3.19	1.22	3.22	1.08
	2.74	0.88	5.02	1.92	5.08	1.70
	5,159 Lbs/Lf	1,658 Lbs/Lf	4,394 Lbs/Lf	1,682 Lbs/Lf	4,444 Lbs/Lf	1,489
	5,661 Lbs/Lf	3,170 Lbs/Lf	4,671 Lbs/Lf	2,450 Lbs/Lf	4,717 Lbs/Lf	2,447
	0.707	0.707	0.707	0.707	0.707	0.707
	0.638	0.638	0.638	0.638	0.638	0.638
	0.26	0.39	0.24	0.29	0.24	0.30
	2.65	3.10	2.57	2.73	2.57	2.77
.Ft.	50 Lbs/Lf/Dia.Ft.	50 Lbs/Lf/Dia.Ft.	50 Lbs/Lf/Dia.Ft.	50 Lbs/Lf/Dia.Ft.	50 Lbs/Lf/Dia.Ft.	50
f/Dia.Ft.	1,000 Lbs/Lf/Dia.Ft.	600 Lbs/Lf/Dia.Ft.	1,250 Lbs/Lf/Dia.Ft.	650 Lbs/Lf/Dia.Ft.	1,250 Lbs/Lf/Dia.Ft.	650

ı Cvr	CP 15 Max Cvr		CP 15 Min Cvr		CP 16 Max Cvr		CP 16 Min Cvr		CP 17 Max Cvr	
	Sta. 2+41		Sta. 2+41		Sta. 2+12		Sta. 2+12		Sta. 2+07	
	rcp		rcp		rcp		rcp		rcp	
In	24	In	24	In	24	In	24	In	24	In
In	3	In	3	In	3	In	3	In	3	In
Ft	2.50	Ft	2.50	Ft	2.50	Ft	2.50	Ft	2.50	Ft
Ft	8.67	Ft	5.28	Ft	8.29	Ft	3.05	Ft	8.35	Ft
	0.6		0.6		0.6		0.6		0.6	
	0.1924		0.1924		0.1924		0.1924		0.1924	
	0.32		0.32		0.32		0.32		0.32	
	0.7		0.7		0.7		0.7		0.7	
	1		1		1		1		1	
Pcf	140	Pcf	140	Pcf	140	Pcf	140	Pcf	140	Pcf
	1.9		1.9		1.9		1.9		1.9	
	0.707		0.707		0.707		0.707		0.707	
	0.638		0.638		0.638		0.638		0.638	
	1		1		1		1		1	
Lbs	48,000	Lbs	48,000	Lbs	48,000	Lbs	32,000	Lbs	48,000	Lbs
	1		1		1		1		1	
Ft	20.00	Ft	14.07	Ft	19.34	Ft	6.17	Ft	19.44	Ft
Ft	20.84	Ft	14.91	Ft	20.18	Ft	11.01	Ft	20.28	Ft
Psf	115	Psf	229	Psf	123	Psf	471	Psf	122	Psf
Ft	2.50	Ft	2.50	Ft	2.50	Ft	2.50	Ft	2.50	Ft
Lbs	5,751	Lbs	8,055	Lbs	5,946	Lbs	7,262	Lbs	5,930	Lbs
Ft	23.28	Ft	17.35	Ft	22.62	Ft	9.45	Ft	22.72	Ft
Lbs/Lf	247	Lbs/Lf	464	Lbs/Lf	263	Lbs/Lf	768	Lbs/Lf	261	Lbs/Lf
Ft	3.83	Ft	3.83	Ft	3.83	Ft	3.83	Ft	3.83	Ft
	0.7		0.7		0.7		0.7		0.7	
	3.47		2.11		3.32		1.22		3.34	
	5.46		3.33		5.22		1.92		5.26	
Ft	5.31	Ft	4.83	Ft	5.25	Ft	4.48	Ft	5.26	Ft
	0.63		0.42		0.61		0.26		0.61	
	0.00		0.00		0.00		0.00		0.00	
Ft	5.31	Ft	4.83	Ft	5.25	Ft	4.48	Ft	5.26	Ft
	1.21		0.89		1.18		0.60		1.19	
Lbs/Lf	4,780	Lbs/Lf	2,911	Lbs/Lf	4,570	Lbs/Lf	1,682	Lbs/Lf	4,604	Lbs/Lf
Lbs/Lf	5,027	Lbs/Lf	3,375	Lbs/Lf	4,833	Lbs/Lf	2,450	Lbs/Lf	4,865	Lbs/Lf
	1		1		1		1		1	
	1.9		1.9		1.9		1.9		1.9	
Lbs/Lf/Dia.Ft.	1,350	Lbs/Lf/Dia.Ft.	900	Lbs/Lf/Dia.Ft.	1,300	Lbs/Lf/Dia.Ft.	650	Lbs/Lf/Dia.Ft.	1,300	Lbs/Lf/Dia.Ft.
	3.47		2.11		3.32		1.22		3.34	
	5.46		3.33		5.22		1.92		5.26	
Lbs/Lf	4,780	Lbs/Lf	2,911	Lbs/Lf	4,570	Lbs/Lf	1,682	Lbs/Lf	4,604	Lbs/Lf
Lbs/Lf	5,027	Lbs/Lf	3,375	Lbs/Lf	4,833	Lbs/Lf	2,450	Lbs/Lf	4,865	Lbs/Lf
	0.707		0.707		0.707		0.707		0.707	
	0.638		0.638		0.638		0.638		0.638	
	0.23		0.25		0.23		0.29		0.23	
	2.56		2.62		2.57		2.73		2.57	
Lbs/Lf/Dia.Ft.	50	Lbs/Lf/Dia.Ft.	50	Lbs/Lf/Dia.Ft.	50	Lbs/Lf/Dia.Ft.	50	Lbs/Lf/Dia.Ft.	50	Lbs/Lf/Dia.Ft.
Lbs/Lf/Dia.Ft.	1,350	Lbs/Lf/Dia.Ft.	900	Lbs/Lf/Dia.Ft.	1,300	Lbs/Lf/Dia.Ft.	650	Lbs/Lf/Dia.Ft.	1,300	Lbs/Lf/Dia.Ft.

CP 17 Min Cvr	CP 18 Max Cvr	CP 18 Min Cvr	CP 19 Max Cvr	CP 19 Min Cvr	CP 20 Max Cvr
Sta. 2+07	Sta. 1+78	Sta. 1+78	Sta. 1+73	Sta. 1+73	Sta. 13+28
rcp	rcp	rcp	rcp	rcp	rcp
24 In	24 In	24 In	24 In	24 In	24 In
3 In	3 In	3 In	3 In	3 In	3 In
2.50 Ft	2.50 Ft	2.50 Ft	2.50 Ft	2.50 Ft	2.50 Ft
5.09 Ft	8.44 Ft	2.55 Ft	8.52 Ft	4.55 Ft	12.2 Ft
0.6	0.6	0.6	0.6	0.6	0.6
0.1924	0.1924	0.1924	0.1924	0.1924	0.1924
0.32	0.32	0.32	0.32	0.32	0.32
0.7	0.7	0.7	0.7	0.7	0.7
1	1	1	1	1	1
140 Pcf	140 Pcf	140 Pcf	140 Pcf	140 Pcf	140 Pcf
1.9	1.9	1.9	1.9	1.9	1.9
0.707	0.707	0.707	0.707	0.707	0.707
0.638	0.638	0.638	0.638	0.638	0.638
1	1	1	1	1	1
48,000 Lbs	48,000 Lbs	32,000 Lbs	48,000 Lbs	48,000 Lbs	48,000 Lbs
1	1	1.1	1	1	1
13.74 Ft	19.60 Ft	5.29 Ft	19.74 Ft	12.79 Ft	26.18 Ft
14.58 Ft	20.44 Ft	10.13 Ft	20.58 Ft	13.63 Ft	27.02 Ft
240 Psf	120 Psf	656 Psf	118 Psf	275 Psf	68 Psf
2.50 Ft	2.50 Ft	2.50 Ft	2.50 Ft	2.50 Ft	2.50 Ft
8,242 Lbs	5,880 Lbs	8,680 Lbs	5,823 Lbs	8,795 Lbs	4,451 Lbs
17.02 Ft	22.88 Ft	8.57 Ft	23.02 Ft	16.07 Ft	29.46 Ft
484 Lbs/Lf	257 Lbs/Lf	1,013 Lbs/Lf	253 Lbs/Lf	547 Lbs/Lf	151 Lbs/Lf
3.83 Ft	3.83 Ft	3.83 Ft	3.83 Ft	3.83 Ft	3.83 Ft
0.7	0.7	0.7	0.7	0.7	0.7
2.04	3.38	1.02	3.41	1.82	4.88
3.21	5.32	1.61	5.37	2.87	7.69
4.80 Ft	5.27 Ft	4.39 Ft	5.28 Ft	4.71 Ft	5.76 Ft
0.41	0.62	0.22	0.62	0.37	0.82
0.00	0.00	0.00	0.00	0.00	0.00
4.80 Ft	5.27 Ft	4.39 Ft	5.28 Ft	4.71 Ft	5.76 Ft
0.87	1.19	0.52	1.20	0.81	1.45
2,806 Lbs/Lf	4,653 Lbs/Lf	1,406 Lbs/Lf	4,697 Lbs/Lf	2,509 Lbs/Lf	6,726 Lbs/Lf
3,290 Lbs/Lf	4,910 Lbs/Lf	2,419 Lbs/Lf	4,950 Lbs/Lf	3,056 Lbs/Lf	6,877 Lbs/Lf
1	1	1	1	1	1
1.9	1.9	1.9	1.9	1.9	1.9
900 Lbs/Lf/Dia.Ft.	1,300 Lbs/Lf/Dia.Ft.	650 Lbs/Lf/Dia.Ft.	1,350 Lbs/Lf/Dia.Ft.	850 Lbs/Lf/Dia.Ft.	1,850 Lbs/Lf/Dia
2.04	3.38	1.02	3.41	1.82	4.88
3.21	5.32	1.61	5.37	2.87	7.69
2,806 Lbs/Lf	4,653 Lbs/Lf	1,406 Lbs/Lf	4,697 Lbs/Lf	2,509 Lbs/Lf	6,726 Lbs/Lf
3,290 Lbs/Lf	4,910 Lbs/Lf	2,419 Lbs/Lf	4,950 Lbs/Lf	3,056 Lbs/Lf	6,877 Lbs/Lf
0.707	0.707	0.707	0.707	0.707	0.707
0.638	0.638	0.638	0.638	0.638	0.638
0.25	0.23	0.30	0.23	0.26	0.22
2.62	2.57	2.79	2.56	2.64	2.54
50 Lbs/Lf/Dia.Ft.	50 Lbs/Lf/Dia.Ft.	50 Lbs/Lf/Dia.Ft.	50 Lbs/Lf/Dia.Ft.	50 Lbs/Lf/Dia.Ft.	50 Lbs/Lf/Dia
900 Lbs/Lf/Dia.Ft.	1,300 Lbs/Lf/Dia.Ft.	650 Lbs/Lf/Dia.Ft.	1,350 Lbs/Lf/Dia.Ft.	850 Lbs/Lf/Dia.Ft.	1,850 Lbs/L

	CP 20 Min Cvr	CP 21 Max Cvr	CP 21 Min Cvr	CP 22 Max Cvr	CP 22 Min Cvr	CP 23 Ma
	Sta. 13+28	Sta. 2+35	Sta. 2+35	Sta. 2+30	Sta. 2+30	Sta. 2+01
	rcp	rcp	rcp	rcp	rcp	rcp
	24 In	36 In	36 In	36 In	36 In	24
	3 In	4 In	4 In	4 In	4 In	3
	2.50 Ft	3.67 Ft	3.67 Ft	3.67 Ft	3.67 Ft	2.50
	2.76 Ft	10.65 Ft	1.16 Ft	10.51 Ft	3.39 Ft	10.52
	0.6	0.6	0.6	0.6	0.6	0.6
	0.1924	0.1924	0.1924	0.1924	0.1924	0.1924
	0.32	0.32	0.32	0.32	0.32	0.32
	0.7	0.7	0.7	0.7	0.7	0.7
	1	1	1	1	1	1
	140 Pcf	140 Pcf	140 Pcf	140 Pcf	140 Pcf	140
	1.9	1.9	1.9	1.9	1.9	1.9
	0.707	0.707	0.707	0.707	0.707	0.707
	0.638	0.638	0.638	0.638	0.638	0.638
	1	1	1	1	1	1
	32,000 Lbs	48,000 Lbs	16,000 Lbs	48,000 Lbs	32,000 Lbs	48,000
	1.1	1	1.2	1	1	1
	5.66 Ft	23.47 Ft	2.86 Ft	23.22 Ft	6.76 Ft	23.24
	10.50 Ft	24.31 Ft	3.70 Ft	24.06 Ft	11.60 Ft	24.08
	592 Psf	84 Psf	1814 Psf	86 Psf	408 Psf	86
	2.50 Ft	3.67 Ft	3.67 Ft	3.67 Ft	3.67 Ft	2.50
	8,377 Lbs	7,235 Lbs	19,040 Lbs	7,329 Lbs	10,126 Lbs	4,997
	8.94 Ft	28.28 Ft	7.67 Ft	28.03 Ft	11.57 Ft	26.52
	937 Lbs/Lf	256 Lbs/Lf	2,482 Lbs/Lf	261 Lbs/Lf	875 Lbs/Lf	188
	3.83 Ft	5.67 Ft	5.67 Ft	5.67 Ft	5.67 Ft	3.83
	0.7	0.7	0.7	0.7	0.7	0.7
	1.10	2.90	0.32	2.87	0.92	4.21
	1.74	4.58	0.50	4.52	1.46	6.63
	4.43 Ft	7.50 Ft	5.99 Ft	7.48 Ft	6.39 Ft	5.55
	0.24	0.55	0.07	0.54	0.20	0.73
	0.00	0.00	0.00	0.00	0.00	0.00
	4.43 Ft	7.50 Ft	5.99 Ft	7.48 Ft	6.39 Ft	5.55
	0.55	1.09	0.19	1.09	0.48	1.35
	1,522 Lbs/Lf	8,612 Lbs/Lf	938 Lbs/Lf	8,498 Lbs/Lf	2,741 Lbs/Lf	5,800
	2,459 Lbs/Lf	8,868 Lbs/Lf	3,420 Lbs/Lf	8,759 Lbs/Lf	3,616 Lbs/Lf	5,988
	1	1	1	1	1	1
	1.9	1.9	1.9	1.9	1.9	1.9
.Ft.	650 Lbs/Lf/Dia.Ft.	1,600 Lbs/Lf/Dia.Ft.	600 Lbs/Lf/Dia.Ft.	1,550 Lbs/Lf/Dia.Ft.	650 Lbs/Lf/Dia.Ft.	1,600
	1.10	2.90	0.32	2.87	0.92	4.21
	1.74	4.58	0.50	4.52	1.46	6.63
	1,522 Lbs/Lf	8,612 Lbs/Lf	938 Lbs/Lf	8,498 Lbs/Lf	2,741 Lbs/Lf	5,800
	2,459 Lbs/Lf	8,868 Lbs/Lf	3,420 Lbs/Lf	8,759 Lbs/Lf	3,616 Lbs/Lf	5,988
	0.707	0.707	0.707	0.707	0.707	0.707
	0.638	0.638	0.638	0.638	0.638	0.638
	0.30	0.24	0.53	0.24	0.31	0.23
	2.76	2.58	3.85	2.58	2.82	2.55
.Ft.	50 Lbs/Lf/Dia.Ft.	50 Lbs/Lf/Dia.Ft.	50 Lbs/Lf/Dia.Ft.	50 Lbs/Lf/Dia.Ft.	50 Lbs/Lf/Dia.Ft.	50
f/Dia.Ft.	650 Lbs/Lf/Dia.Ft.	1,600 Lbs/Lf/Dia.Ft.	600 Lbs/Lf/Dia.Ft.	1,550 Lbs/Lf/Dia.Ft.	650 Lbs/Lf/Dia.Ft.	1,600

x Cvr	CP 23 Min Cvr Sta. 2+01 rcp	CP 24 Max Cvr Sta. 1+96 rcp	CP 24 Min Cvr Sta. 1+96 rcp	CP 25 Max Cvr Sta. 1+67 rcp	CP 25 Min Cvr Sta. 1+67 rcp
In	24 In	24 In	24 In	24 In	24 In
In	3 In	3 In	3 In	3 In	3 In
Ft	2.50 Ft	2.50 Ft	2.50 Ft	2.50 Ft	2.50 Ft
Ft	1.59 Ft	10.93 Ft	3.8 Ft	11.2 Ft	1.75 Ft
	0.6	0.6	0.6	0.6	0.6
	0.1924	0.1924	0.1924	0.1924	0.1924
	0.32	0.32	0.32	0.32	0.32
	0.7	0.7	0.7	0.7	0.7
	1	1	1	1	1
Pcf	140 Pcf	140 Pcf	140 Pcf	140 Pcf	140 Pcf
	1.9	1.9	1.9	1.9	1.9
	0.707	0.707	0.707	0.707	0.707
	0.638	0.638	0.638	0.638	0.638
	1	1	1	1	1
Lbs	32,000 Lbs	48,000 Lbs	32,000 Lbs	48,000 Lbs	32,000 Lbs
	1.2	1	1	1	1.2
Ft	3.61 Ft	23.96 Ft	7.48 Ft	24.43 Ft	3.89 Ft
Ft	8.45 Ft	24.80 Ft	12.32 Ft	25.27 Ft	8.73 Ft
Psf	1258 Psf	81 Psf	347 Psf	78 Psf	1130 Psf
Ft	2.50 Ft	2.50 Ft	2.50 Ft	2.50 Ft	2.50 Ft
Lbs	11,361 Lbs	4,851 Lbs	6,489 Lbs	4,764 Lbs	10,996 Lbs
Ft	6.89 Ft	27.24 Ft	10.76 Ft	27.71 Ft	7.17 Ft
Lbs/Lf	1,649 Lbs/Lf	178 Lbs/Lf	603 Lbs/Lf	172 Lbs/Lf	1,534 Lbs/Lf
Ft	3.83 Ft	3.83 Ft	3.83 Ft	3.83 Ft	3.83 Ft
	0.7	0.7	0.7	0.7	0.7
	0.64	4.37	1.52	4.48	0.70
	1.00	6.89	2.39	7.06	1.10
Ft	4.23 Ft	5.60 Ft	4.60 Ft	5.63 Ft	4.26 Ft
	0.14	0.75	0.32	0.76	0.16
	0.00	0.00	0.00	0.00	0.00
Ft	4.23 Ft	5.60 Ft	4.60 Ft	5.63 Ft	4.26 Ft
	0.35	1.37	0.71	1.39	0.38
Lbs/Lf	877 Lbs/Lf	6,026 Lbs/Lf	2,095 Lbs/Lf	6,175 Lbs/Lf	965 Lbs/Lf
Lbs/Lf	2,526 Lbs/Lf	6,204 Lbs/Lf	2,698 Lbs/Lf	6,347 Lbs/Lf	2,499 Lbs/Lf
	1	1	1	1	1
	1.9	1.9	1.9	1.9	1.9
Lbs/Lf/Dia.Ft.	700 Lbs/Lf/Dia.Ft.	1,650 Lbs/Lf/Dia.Ft.	750 Lbs/Lf/Dia.Ft.	1,700 Lbs/Lf/Dia.Ft.	700 Lbs/Lf/Dia.Ft.
	0.64	4.37	1.52	4.48	0.70
	1.00	6.89	2.39	7.06	1.10
Lbs/Lf	877 Lbs/Lf	6,026 Lbs/Lf	2,095 Lbs/Lf	6,175 Lbs/Lf	965 Lbs/Lf
Lbs/Lf	2,526 Lbs/Lf	6,204 Lbs/Lf	2,698 Lbs/Lf	6,347 Lbs/Lf	2,499 Lbs/Lf
	0.707	0.707	0.707	0.707	0.707
	0.638	0.638	0.638	0.638	0.638
	0.36	0.23	0.27	0.23	0.35
	3.01	2.55	2.68	2.54	2.95
Lbs/Lf/Dia.Ft.	50 Lbs/Lf/Dia.Ft.	50 Lbs/Lf/Dia.Ft.	50 Lbs/Lf/Dia.Ft.	50 Lbs/Lf/Dia.Ft.	50 Lbs/Lf/Dia.Ft.
Lbs/Lf/Dia.Ft.	700 Lbs/Lf/Dia.Ft.	1,650 Lbs/Lf/Dia.Ft.	750 Lbs/Lf/Dia.Ft.	1,700 Lbs/Lf/Dia.Ft.	700 Lbs/Lf/Dia.Ft.

CP 26 Max Cvr	CP 26 Min Cvr	CP 27 Max Cvr	CP 27 Min Cvr	CP 28 Max Cvr	CP 28 Min Cvr
Sta. 1+62	Sta. 1+62	Sta. 2+48	Sta. 2+48	Sta. 0+96	Sta. 0+96
rcp	rcp	rcp	rcp	rcp	rcp
24 In	24 In	24 In	24 In	24 In	24 In
3 In	3 In	3 In	3 In	3 In	3 In
2.50 Ft	2.50 Ft	2.50 Ft	2.50 Ft	2.50 Ft	2.50 Ft
11.27 Ft	4.55 Ft	8.75 Ft	1.5 Ft	9.09 Ft	1.5 Ft
0.6	0.6	0.6	0.6	0.6	0.6
0.1924	0.1924	0.1924	0.1924	0.1924	0.1924
0.32	0.32	0.32	0.32	0.32	0.32
0.7	0.7	0.7	0.7	0.7	0.7
1	1	1	1	1	1
140 Pcf	140 Pcf	140 Pcf	140 Pcf	140 Pcf	140 Pcf
1.9	1.9	1.9	1.9	1.9	1.9
0.707	0.707	0.707	0.707	0.707	0.707
0.638	0.638	0.638	0.638	0.638	0.638
1	1	1	1	1	1
48,000 Lbs	48,000 Lbs	48,000 Lbs	32,000 Lbs	48,000 Lbs	32,000 Lbs
1	1	1	1.2	1	1.2
24.55 Ft	12.79 Ft	20.14 Ft	3.45 Ft	20.74 Ft	3.45 Ft
25.39 Ft	13.63 Ft	20.98 Ft	8.29 Ft	21.58 Ft	8.29 Ft
77 Psf	275 Psf	114 Psf	1340 Psf	107 Psf	1340 Psf
2.50 Ft	2.50 Ft	2.50 Ft	2.50 Ft	2.50 Ft	2.50 Ft
4,726 Lbs	8,795 Lbs	5,741 Lbs	11,574 Lbs	5,547 Lbs	11,574 Lbs
27.83 Ft	16.07 Ft	23.42 Ft	6.74 Ft	24.02 Ft	6.74 Ft
170 Lbs/Lf	547 Lbs/Lf	245 Lbs/Lf	1,717 Lbs/Lf	231 Lbs/Lf	1,717 Lbs/Lf
3.83 Ft	3.83 Ft	3.83 Ft	3.83 Ft	3.83 Ft	3.83 Ft
0.7	0.7	0.7	0.7	0.7	0.7
4.51	1.82	3.50	0.60	3.64	0.60
7.10	2.87	5.51	0.95	5.73	0.95
5.64 Ft	4.71 Ft	5.32 Ft	4.21 Ft	5.36 Ft	4.21 Ft
0.77	0.37	0.63	0.14	0.65	0.14
0.00	0.00	0.00	0.00	0.00	0.00
5.64 Ft	4.71 Ft	5.32 Ft	4.21 Ft	5.36 Ft	4.21 Ft
1.39	0.81	1.22	0.33	1.25	0.33
6,213 Lbs/Lf	2,509 Lbs/Lf	4,824 Lbs/Lf	827 Lbs/Lf	5,012 Lbs/Lf	827 Lbs/Lf
6,383 Lbs/Lf	3,056 Lbs/Lf	5,069 Lbs/Lf	2,544 Lbs/Lf	5,243 Lbs/Lf	2,544 Lbs/Lf
1	1	1	1	1	1
1.9	1.9	1.9	1.9	1.9	1.9
1,700 Lbs/Lf/Dia.Ft.	850 Lbs/Lf/Dia.Ft.	1,350 Lbs/Lf/Dia.Ft.	700 Lbs/Lf/Dia.Ft.	1,400 Lbs/Lf/Dia.Ft.	700 Lbs/Lf/Dia
4.51	1.82	3.50	0.60	3.64	0.60
7.10	2.87	5.51	0.95	5.73	0.95
6,213 Lbs/Lf	2,509 Lbs/Lf	4,824 Lbs/Lf	827 Lbs/Lf	5,012 Lbs/Lf	827 Lbs/Lf
6,383 Lbs/Lf	3,056 Lbs/Lf	5,069 Lbs/Lf	2,544 Lbs/Lf	5,243 Lbs/Lf	2,544 Lbs/Lf
0.707	0.707	0.707	0.707	0.707	0.707
0.638	0.638	0.638	0.638	0.638	0.638
0.23	0.26	0.23	0.37	0.23	0.37
2.54	2.64	2.56	3.05	2.56	3.05
50 Lbs/Lf/Dia.Ft.	50 Lbs/Lf/Dia.Ft.	50 Lbs/Lf/Dia.Ft.	50 Lbs/Lf/Dia.Ft.	50 Lbs/Lf/Dia.Ft.	50 Lbs/Lf/Dia
1,700 Lbs/Lf/Dia.Ft.	850 Lbs/Lf/Dia.Ft.	1,350 Lbs/Lf/Dia.Ft.	700 Lbs/Lf/Dia.Ft.	1,400 Lbs/Lf/Dia.Ft.	700 Lbs/L

	CP 29 Max Cvr	CP 29 Min Cvr	CP 30 Max Cvr	CP 30 Min Cvr	CP 31 Max Cvr	CP 31 Mir
	Sta. 0+67	Sta. 0+67	Sta. 43+10	Sta. 43+10	Sta. 37+75	Sta. 37+7
	rcp	rcp	rcp	rcp	rcp	rcp
	24 In	24 In	24 In	24 In	24 In	24
	3 In	3 In	3 In	3 In	3 In	3
	2.50 Ft	2.50 Ft	2.50 Ft	2.50 Ft	2.50 Ft	2.50
	9.33 Ft	1 Ft	8.52 Ft	2 Ft	8.59 Ft	1.51
	0.6	0.6	0.6	0.6	0.6	0.6
	0.1924	0.1924	0.1924	0.1924	0.1924	0.1924
	0.32	0.32	0.32	0.32	0.32	0.32
	0.7	0.7	0.7	0.7	0.7	0.7
	1	1	1	1	1	1
	140 Pcf	140 Pcf	140 Pcf	140 Pcf	140 Pcf	140
	1.9	1.9	1.9	1.9	1.9	1.9
	0.707	0.707	0.707	0.707	0.707	0.707
	0.638	0.638	0.638	0.638	0.638	0.638
	1	1	1	1	1	1
	48,000 Lbs	16,000 Lbs	48,000 Lbs	32,000 Lbs	48,000 Lbs	32,000
	1	1.3	1	1.2	1	1.2
	21.16 Ft	2.58 Ft	19.74 Ft	4.33 Ft	19.86 Ft	3.47
	22.00 Ft	3.42 Ft	20.58 Ft	9.17 Ft	20.70 Ft	8.31
	103 Psf	2357 Psf	118 Psf	967 Psf	117 Psf	1330
	2.50 Ft	2.50 Ft	2.50 Ft	2.50 Ft	2.50 Ft	2.50
	5,448 Lbs	15,203 Lbs	5,823 Lbs	10,468 Lbs	5,810 Lbs	11,546
	24.44 Ft	5.86 Ft	23.02 Ft	7.61 Ft	23.14 Ft	6.75
	223 Lbs/Lf	2,594 Lbs/Lf	253 Lbs/Lf	1,376 Lbs/Lf	251 Lbs/Lf	1,711
	3.83 Ft	3.83 Ft	3.83 Ft	3.83 Ft	3.83 Ft	3.83
	0.7	0.7	0.7	0.7	0.7	0.7
	3.73	0.40	3.41	0.80	3.44	0.60
	5.88	0.63	5.37	1.26	5.41	0.95
	5.39 Ft	4.12 Ft	5.28 Ft	4.30 Ft	5.29 Ft	4.22
	0.67	0.09	0.62	0.18	0.62	0.14
	-0.00	0.00	-0.00	-0.00	-0.00	-0.00
	5.39 Ft	4.12 Ft	5.28 Ft	4.30 Ft	5.29 Ft	4.22
	1.26	0.23	1.20	0.43	1.21	0.33
	5,144 Lbs/Lf	551 Lbs/Lf	4,697 Lbs/Lf	1,103 Lbs/Lf	4,736 Lbs/Lf	832
	5,367 Lbs/Lf	3,145 Lbs/Lf	4,950 Lbs/Lf	2,479 Lbs/Lf	4,987 Lbs/Lf	2,543
	1	1	1	1	1	1
	1.9	1.9	1.9	1.9	1.9	1.9
.Ft.	1,450 Lbs/Lf/Dia.Ft.	850 Lbs/Lf/Dia.Ft.	1,350 Lbs/Lf/Dia.Ft.	700 Lbs/Lf/Dia.Ft.	1,350 Lbs/Lf/Dia.Ft.	700
	3.73	0.40	3.41	0.80	3.44	0.60
	5.88	0.63	5.37	1.26	5.41	0.95
	5,144 Lbs/Lf	551 Lbs/Lf	4,697 Lbs/Lf	1,103 Lbs/Lf	4,736 Lbs/Lf	832
	5,367 Lbs/Lf	3,145 Lbs/Lf	4,950 Lbs/Lf	2,479 Lbs/Lf	4,987 Lbs/Lf	2,543
	0.707	0.707	0.707	0.707	0.707	0.707
	0.638	0.638	0.638	0.638	0.638	0.638
	0.23	0.46	0.23	0.33	0.23	0.37
	2.56	3.45	2.56	2.89	2.56	3.05
.Ft.	50 Lbs/Lf/Dia.Ft.	50 Lbs/Lf/Dia.Ft.	50 Lbs/Lf/Dia.Ft.	50 Lbs/Lf/Dia.Ft.	50 Lbs/Lf/Dia.Ft.	50
f/Dia.Ft.	1,450 Lbs/Lf/Dia.Ft.	850 Lbs/Lf/Dia.Ft.	1,350 Lbs/Lf/Dia.Ft.	700 Lbs/Lf/Dia.Ft.	1,350 Lbs/Lf/Dia.Ft.	700

ı Cvr	CP 32 Max Cvr		CP 32 Min Cvr	
5	Sta. 35+25		Sta. 35+25	
	rcp		rcp	
In	24	In	24	In
In	3	In	3	In
Ft	2.50	Ft	2.50	Ft
Ft	9.25	Ft	2	Ft
	0.6		0.6	
	0.1924		0.1924	
	0.32		0.32	
	0.7		0.7	
	1		1	
Pcf	140	Pcf	140	Pcf
	1.9		1.9	
	0.707		0.707	
	0.638		0.638	
	1		1	
Lbs	48,000	Lbs	32,000	Lbs
	1		1.2	
Ft	21.02	Ft	4.33	Ft
Ft	21.86	Ft	9.17	Ft
Psf	104	Psf	967	Psf
Ft	2.50	Ft	2.50	Ft
Lbs	5,465	Lbs	10,468	Lbs
Ft	24.3	Ft	7.61	Ft
Lbs/Lf	225	Lbs/Lf	1,376	Lbs/Lf
Ft	3.83	Ft	3.83	Ft
	0.7		0.7	
	3.70		0.80	
	5.83		1.26	
Ft	5.38	Ft	4.30	Ft
	0.66		0.18	
	-0.00		-0.00	
Ft	5.38	Ft	4.30	Ft
	1.26		0.43	
Lbs/Lf	5,100	Lbs/Lf	1,103	Lbs/Lf
Lbs/Lf	5,325	Lbs/Lf	2,479	Lbs/Lf
	1		1	
	1.9		1.9	
Lbs/Lf/Dia.Ft.	1,450	Lbs/Lf/Dia.Ft.	700	Lbs/Lf/Dia
	3.70		0.80	
	5.83		1.26	
Lbs/Lf	5,100	Lbs/Lf	1,103	Lbs/Lf
Lbs/Lf	5,325	Lbs/Lf	2,479	Lbs/Lf
	0.707		0.707	
	0.638		0.638	
	0.23		0.33	
	2.56		2.89	
Lbs/Lf/Dia.Ft.	50	Lbs/Lf/Dia.Ft.	50	Lbs/Lf/Dia
Lbs/Lf/Dia.Ft.	1,450	Lbs/Lf/Dia.Ft.	700	Lbs/L

GROVERS AVENUE STORM DRAIN LATERAL
MAIN LINE AND CONNECTOR PIPE CALCULATIONS
LOADING ON RIGID CONCRETE PIPES.
RE: Concrete Pipe Handbook, ACPA, 1988, Chapter 4.

EK3098
09/26/94
BJF/KM

INPUT DATA:

PIPE RECORD NO.	CP 33 Max Cvr	CP 33 Min Cvr	CP 34 Max Cvr	CP 34 Min Cvr
Location:	Sta. 1+73	Sta. 1+73	Sta. 20+40	Sta. 20+40
Pipe material:	rcp	rcp	rcp	rcp
Internal Pipe diameter (D):	24 In	24 In	24 In	24 In
Wall thickness:	3 In	3 In	3 In	3 In
Outside Diameter (d):	2.50 Ft	2.50 Ft	2.50 Ft	2.50 Ft
Height of Cover (H):	6.2 Ft	2 Ft	10.79 Ft	1.5 Ft
Coefficient of Friction (u) :	0.6	0.6	0.6	0.6
Ku:	0.1924	0.1924	0.1924	0.1924
K :	0.32	0.32	0.32	0.32
Settlement Ratio (rsd):	0.7	0.7	0.7	0.7
Projection Ratio (p) =	1	1	1	1
Soil density (w):	140 Pcf	140 Pcf	140 Pcf	140 Pcf
Trench Bedding Factor (Bf):	1.9	1.9	1.9	1.9
Load Factor Parameters: N:	0.707	0.707	0.707	0.707
x:	0.638	0.638	0.638	0.638
Safety Factor (SF):	1	1	1	1

LIVE LOAD ON EFFECTIVE PLANE AT TOP OF PIPE (LL)(Pg. 4-38 - 4-43):

Critical HS-20 loadi				
P = Point load =	48,000 Lbs	32,000 Lbs	48,000 Lbs	32,000 Lbs
IF = Impact factor =	1	1.2	1	1.2
L = Length of plane =	15.68 Ft	4.33 Ft	23.71 Ft	3.45 Ft
W = Width of plane =	16.52 Ft	9.17 Ft	24.55 Ft	8.29 Ft
Pavg = Average pressure actir				
= P * IF / W / L =	185 Psf	967 Psf	82 Psf	1340 Psf
s = Effective width =	2.50 Ft	2.50 Ft	2.50 Ft	2.50 Ft
Wt = Active weight on pipe = Pavg * L * s =	7,252 Lbs	10,468 Lbs	4,861 Lbs	11,574 Lbs
Le = Effective supporting length of pipe				
= L + 1.75 * (.75 * d) =	18.96 Ft	7.61 Ft	26.99 Ft	6.74 Ft
LL = Wt / Le =	382 Lbs/Lf	1,376 Lbs/Lf	180 Lbs/Lf	1,717 Lbs/Lf

1. TRENCH CONDITIONS:

DEAD LOAD (DL) (Pg. 4-4):				
Mimimum Trench Width =	3.83 Ft	3.83 Ft	3.83 Ft	3.83 Ft
Compute the transition width for trench loading = positive projecting loading using Fig. 4.11, page 4-17,				
rsd * p = Settlement * Projection ratio =	0.7	0.7	0.7	0.7
H/d = Height of cover / diameter =	2.48	0.80	4.32	0.60
Cc = Load coeficient, positive projection =	3.91	1.26	6.80	0.95
Try Transition Width (tw) =	4.96 Ft	4.30 Ft	5.58 Ft	4.21 Ft
j = 2*ku'*H/tw =	0.48	0.18	0.74	0.14
err = (1-exp(-j))*tw^2/(2*ku)-Cc*d^2 =	0.00	0.00	0.00	0.00
Design Width (b) =	4.96 Ft	4.30 Ft	5.58 Ft	4.21 Ft
Cd = (1-exp(-2*ku'*H/b))/(2*ku') =	0.99	0.43	1.36	0.33
DL = Cd * w * b^2 =	3,418 Lbs/Lf	1,103 Lbs/Lf	5,949 Lbs/Lf	827 Lbs/Lf
TOTAL LOAD (TL):				
TL = LL + DL =	3,800 Lbs/Lf	2,479 Lbs/Lf	6,129 Lbs/Lf	2,544 Lbs/Lf
MINIMUM REQUIRED PIPE STRENGTH (4-67 - 4-68):				
Safety Factor (SF) =	1	1	1	1
Bedding Factor (BF) =	1.9	1.9	1.9	1.9
D-LOAD = TL / BF * SF / (D/12) =	1,050 Lbs/Lf/Dia.Ft.	700 Lbs/Lf/Dia.Ft.	1,650 Lbs/Lf/Dia.Ft.	700 Lbs/Lf/Dia

2. POSITIVE PROJECTION CONDITIONS (4-12, 4-17):

DEAD LOAD (DL):				
H/d =	2.48	0.80	4.32	0.60
Cc = Load coeficient, positive projection =	3.91	1.26	6.80	0.95
DL = Cc * w * d^2 =	3,418 Lbs/Lf	1,103 Lbs/Lf	5,949 Lbs/Lf	827 Lbs/Lf
TOTAL LOAD (TL):				
TL = LL + DL =	3,800 Lbs/Lf	2,479 Lbs/Lf	6,129 Lbs/Lf	2,544 Lbs/Lf
MINIMUM REQUIRED PIPE STRENGTH (4-67 - 4-68)				
Safety Factor (SF) = 1				
Load Factor (LF): (pg 4-63 - 4-64)				
LF = 1.431/(N-xq)				
Where: N =	0.707	0.707	0.707	0.707
x =	0.638	0.638	0.638	0.638
q = pK/Cc(H/d+p/2) =	0.24	0.33	0.23	0.37
LF =	2.60	2.89	2.55	3.05
D-Load = TL / LF* SF / (D/12) =	750 Lbs/Lf/Dia.Ft.	50 Lbs/Lf/Dia.Ft.	50 Lbs/Lf/Dia.Ft.	50 Lbs/Lf/Dia

For design use the greater of D-Loads for trench and positive projecting conditions,

D-Load =	1,050 Lbs/Lf/Dia.Ft.	700 Lbs/Lf/Dia.Ft.	1,650 Lbs/Lf/Dia.Ft.	700 Lbs/L

	CP 35 Max Cvr	CP 35 Min Cvr	CP 36 Max Cvr	CP 36 Min Cvr
	Sta. 18+93	Sta. 18+93	Sta. 9+42	Sta. 9+42
	rcp	rcp	rcp	rcp
	24 In	24 In	24 In	24 In
	3 In	3 In	3 In	3 In
	2.50 Ft	2.50 Ft	2.50 Ft	2.50 Ft
	11.47 Ft	1.5 Ft	11.01 Ft	2.5 Ft
	0.6	0.6	0.6	0.6
	0.1924	0.1924	0.1924	0.1924
	0.32	0.32	0.32	0.32
	0.7	0.7	0.7	0.7
	1	1	1	1
	140 Pcf	140 Pcf	140 Pcf	140 Pcf
	1.9	1.9	1.9	1.9
	0.707	0.707	0.707	0.707
	0.638	0.638	0.638	0.638
	1	1	1	1
	48,000 Lbs	32,000 Lbs	48,000 Lbs	32,000 Lbs
	1	1.2	1	1.1
	24.90 Ft	3.45 Ft	24.10 Ft	5.20 Ft
	25.74 Ft	8.29 Ft	24.94 Ft	10.04 Ft
	75 Psf	1340 Psf	80 Psf	673 Psf
	2.50 Ft	2.50 Ft	2.50 Ft	2.50 Ft
	4,669 Lbs	11,574 Lbs	4,819 Lbs	8,757 Lbs
	28.18 Ft	6.74 Ft	27.38 Ft	8.49 Ft
	166 Lbs/Lf	1,717 Lbs/Lf	176 Lbs/Lf	1,031 Lbs/Lf
	3.83 Ft	3.83 Ft	3.83 Ft	3.83 Ft
	0.7	0.7	0.7	0.7
	4.59	0.60	4.40	1.00
	7.23	0.95	6.94	1.58
	5.67 Ft	4.21 Ft	5.61 Ft	4.39 Ft
	0.78	0.14	0.76	0.22
	0.00	0.00	0.00	0.00
	5.67 Ft	4.21 Ft	5.61 Ft	4.39 Ft
	1.41	0.33	1.38	0.51
	6,324 Lbs/Lf	827 Lbs/Lf	6,070 Lbs/Lf	1,378 Lbs/Lf
	6,490 Lbs/Lf	2,544 Lbs/Lf	6,246 Lbs/Lf	2,409 Lbs/Lf
	1	1	1	1
	1.9	1.9	1.9	1.9
.Ft.	1,750 Lbs/Lf/Dia.Ft.	700 Lbs/Lf/Dia.Ft.	1,650 Lbs/Lf/Dia.Ft.	650 Lbs/Lf/Dia.Ft.
	4.59	0.60	4.40	1.00
	7.23	0.95	6.94	1.58
	6,324 Lbs/Lf	827 Lbs/Lf	6,070 Lbs/Lf	1,378 Lbs/Lf
	6,490 Lbs/Lf	2,544 Lbs/Lf	6,246 Lbs/Lf	2,409 Lbs/Lf
	0.707	0.707	0.707	0.707
	0.638	0.638	0.638	0.638
	0.23	0.37	0.23	0.31
	2.54	3.05	2.54	2.79
.Ft.	50 Lbs/Lf/Dia.Ft.	50 Lbs/Lf/Dia.Ft.	50 Lbs/Lf/Dia.Ft.	50 Lbs/Lf/Dia.Ft.
f/Dia.Ft.	1,750 Lbs/Lf/Dia.Ft.	700 Lbs/Lf/Dia.Ft.	1,650 Lbs/Lf/Dia.Ft.	650 Lbs/Lf/Dia.Ft.

C. RCP REPLACING CBC ALTERNATIVE CALCULATIONS

JOB NAME: GROVERS AVENUE STORM DRAIN LATERAL (RCP-ALTERNATIVE)
JOB NUMBER: 8156.001
BY: BRUCE FRIEDHOFF
Date: 09-22-1994
Time: 11:57:57

NOTE HYDRAULICS ARE SAME FOR CONCRETE-LINE CMP ALT.

Job Statistics:

Number of Pipes	=	12
Total Length of Pipe	=	5,146 Feet
Longest Pipe	=	1,348.00 Feet
Shortest Pipe	=	12.00 Feet
Maximum Flow	=	525.00 cfs
Minimum Flow	=	8.00 cfs
Maximum Velocity	=	11.89 fps
Minimum Velocity	=	2.55 fps
Maximum Cover Above Crown	=	19.13 Feet
Minimum Cover Above Crown	=	6.64 Feet
Maximum (Ground - HGL)	=	6.35 Feet
Minimum (Ground - HGL)	=	2.25 Feet
Maximum (HGL - Crown)	=	11.81 Feet
Minimum (HGL - Crown)	=	0.12 Feet

+++++++++1+++++++++2+++++++++3+++++++++4+++++++++5+++++++++6+++++++++7+++++++++8+++++++++9+++++++++10++++++++++11++++++++++12++++++++++13

TABLE 1 - INPUT DATA

Pipe Number	Upstream Station	Length (Feet)	Type of Pipe	Diameter (Inches)	Span (Feet)	Rise (Feet)	Number of Pipes	Flow (cfs)	Flow Per Pipe	Ground Elevation	Crown Elevation	Downstream Pipe No.
1	65	237	CMP 0.024	90			1	525.00	525.00	1446.95	1429.85	0
2	77	12	CBC 0.012		12.00	12.00	1	525.00	525.00	1446.95	1435.00	1
3	1,298	1,221	RCP 0.012	108			1	509.00	509.00	1450.98	1440.89	2
4	2,646	1,348	RCP 0.012	84			1	349.00	349.00	1453.44	1445.72	3
5	3,293	647	RCP 0.012	48			1	90.00	90.00	1457.30	1448.85	4
6	3,800	507	RCP 0.012	42			1	82.00	82.00	1460.48	1451.69	5
7	4,337	537	RCP 0.012	42			1	82.00	82.00	1461.97	1453.55	6
8	1,437	139	RCP 0.012	60			1	157.00	157.00	1451.26	1441.33	3
9	2,810	164	RCP 0.012	84			1	255.00	255.00	1455.00	1448.36	4
10	3,352	59	RCP 0.012	24			1	8.00	8.00	1457.35	1449.82	5
11	4,468	131	RCP 0.012	48			1	82.00	82.00	1462.16	1454.98	7
12	2,954	144	RCP 0.012	60			1	165.00	165.00	1455.70	1450.64	9

+++++++++1+++++++++2+++++++++3+++++++++4+++++++++5+++++++++6+++++++++7+++++++++8+++++++++9+++++++++10++++++++++11++++++++++12++++++++++13

TABLE 2 - HYDRAULIC DESIGN DATA

Pipe Number	Area (Sq Ft)	Perimeter (Feet)	Radius (Feet)	Velocity (fps)	Vel. Head (Feet)	Energy Slope	Pipe Slope	K	Angle	Minor Loss (Feet)	Pipe Loss (Feet)	EGL (Feet)	HGL (Feet)
Outfall Conditions				0.00								1437.80	1437.80
1	44.16	24.00	1.84	11.89	2.20	0.01627	0.00857	1.0	0	2.20	3.86	1440.00	1437.80
												1443.85	1441.66
2	144.00	48.00	3.00	3.65	0.21	0.00020	0.42917	1.0	0	1.06	0.00	1444.91	1444.70
												1444.91	1444.70

3	63.59	28.00	2.27	8.01	1.00	0.00139	0.00482	0.3	0	0.09	1.70	1445.00	1444.00
												1446.70	1445.70
4	38.47	22.00	1.75	9.07	1.28	0.00254	0.00358	0.3	0	0.01	3.42	1446.70	1445.42
												1450.12	1448.84
5	12.56	13.00	0.97	7.17	0.80	0.00349	0.00484	0.3	0	0.02	2.26	1450.14	1449.34
												1452.39	1451.60
6	9.62	11.00	0.87	8.53	1.13	0.00564	0.00560	0.3	0	0.01	2.86	1452.40	1451.27
												1455.26	1454.13
7	9.62	11.00	0.87	8.53	1.13	0.00564	0.00346	0.3	0	0.00	3.03	1455.26	1454.13
												1458.29	1457.16
8	19.63	16.00	1.23	8.00	0.99	0.00316	0.00317	1.0	90	0.99	0.44	1447.69	1446.70
												1448.13	1447.14
9	38.47	22.00	1.75	6.63	0.68	0.00135	0.01610	1.0	90	0.68	0.22	1450.80	1450.12
												1451.02	1450.34
10	3.14	6.00	0.52	2.55	0.10	0.00100	0.01644	1.0	90	0.10	0.06	1452.49	1452.39
												1452.55	1452.45
11	12.56	13.00	0.97	6.53	0.66	0.00289	0.01092	1.0	90	0.66	0.38	1458.95	1458.29
												1459.33	1458.67
12	19.63	16.00	1.23	8.41	1.10	0.00349	0.01583	0.3	90	0.33	0.50	1451.35	1450.26
												1451.86	1450.76

+++++++1+++++++++2+++++++++3+++++++++4+++++++++5+++++++++6+++++++++7+++++++++8+++++++++9+++++++++10++++++++11++++++++12++++++++13

TABLE 3 - GRAPH DATA SUMMARY

Pipe Number	Station (Feet)	Ground Elevation	EGL Elevation	HGL Elevation	Crown Elevation	Invert Elevation	Cover (Feet)	Ground-HGL (Feet)	HGL-Crown (Feet)
			1437.80	1437.80					
1	-172	1446.95	1440.00	1437.80	1427.82	1420.32	19.13	9.15	9.98
	65	1446.95	1443.85	1441.66	1429.85	1422.35	17.10	5.29	11.81
2	65	1446.95	1444.91	1444.70	1429.85	1417.85	17.10	2.25	14.85
	77	1446.95	1444.91	1444.70	1435.00	1423.00	11.95	2.25	9.70
3	77	1446.95	1445.00	1444.00	1435.00	1426.00	11.95	2.95	9.00
	1298	1450.98	1446.70	1445.70	1440.89	1431.89	10.09	5.28	4.81
4	1298	1450.98	1446.70	1445.42	1440.89	1433.89	10.09	5.56	4.53
	2646	1453.44	1450.12	1448.84	1445.72	1438.72	7.72	4.60	3.12
5	2646	1453.44	1450.14	1449.34	1445.72	1441.72	7.72	4.10	3.62
	3293	1457.30	1452.39	1451.60	1448.85	1444.85	8.45	5.70	2.75
6	3293	1457.30	1452.40	1451.27	1448.85	1445.35	8.45	6.03	2.42
	3800	1460.48	1455.26	1454.13	1451.69	1448.19	8.79	6.35	2.44
7	3800	1460.48	1455.26	1454.13	1451.69	1448.19	8.79	6.35	2.44
	4337	1461.97	1458.29	1457.16	1453.55	1450.05	8.42	4.81	3.61
8	1298	1450.98	1447.69	1446.70	1440.89	1435.89	10.09	4.28	5.81
	1437	1451.26	1448.13	1447.14	1441.33	1436.33	9.93	4.12	5.81
9	2646	1453.44	1450.80	1450.12	1445.72	1438.72	7.72	3.32	4.40
	2810	1455.00	1451.02	1450.34	1448.36	1441.36	6.64	4.66	1.98
10	3293	1457.30	1452.49	1452.39	1448.85	1446.85	8.45	4.91	3.54
	3352	1457.35	1452.55	1452.45	1449.82	1447.82	7.53	4.90	2.63
11	4337	1461.97	1458.95	1458.29	1453.55	1449.55	8.42	3.68	4.74
	4468	1462.16	1459.33	1458.67	1454.98	1450.98	7.18	3.49	3.69
12	2810	1455.00	1451.35	1450.26	1448.36	1443.36	6.64	4.74	1.90
	2954	1455.70	1451.86	1450.76	1450.64	1445.64	5.06	4.94	0.12

Grovers Avenue Storm Drain Lateral

Inlet/Connector Pipe Configuration Summary - RCP (CBC Main Line Pipe Is Replaced by RCP)

Inlet No.	Qty	Description	Location	ALT Design Flow (cfs)	Inlet Flow Capacity (cfs)	Flow By (cfs)	CP D (ft)	CP L (ft)	L (ft)	L yed	TOC	ELI	HGL UpNode	HGL DNode	STA UpNode	STA DNode	HGL m	STA Inlet	TW Elev	Conn ELI SD	Conn ELI Joint	m to joint	m to SD	< to Joint	< to SD	DEPTH OF COVER VALUES Min Cvr	Max Cvr
1	1	Catch Basin Type M-2, L = 13,17 (P-1569 Mod)	30th Way ES - RT	40 0	26 0	14 0	2 00	11 30			62 38	56 40	1458 67	1458 29	227	96	0.00290	230	58 68	51.94			0.3947		23.25	3.48	7.94
2	1	Catch Basin Type M-2, L = 13,17 (P-1569 Mod)	30th Way WS - LT	40 0	26 0	14 0	2 00	18 30	6 20	12 10	62 47	54 80	1458 67	1458 29	227	96	0.00290	235	58 69	51 98	52.32	0.4000	0.0281	23.58	1.61	6.17	7.99
3	1	Catch Basin Type M-2, L = 13,17 (P-1569 Mod)	30th Way ES - RT	14 0	11 0	3 0	2 00	11 40			61 76	56 40	1458 67	1458 29	227	96	0.00290	196	58.56	51 72			0.4105		24.24	2.85	7.53
4	1	Catch Basin Type M-2, L = 13,17 (P-1569 Mod)	30th Way WS - LT	14 0	11 0	3 0	2 00	19 10	7 30	11 80	61 65	54 67	1458 67	1458 29	227	96	0.00290	201	58.59	51.75	51.98	0.3685	0.0195	21.62	1.12	4.68	7.60
5	1	Catch Basin Type M-2, L = 13,17 (P-1569 Mod)	30th Way ES - RT	4 0	4 0	None	2 00	11 10			61 48	56 40	1458 67	1458 29	227	96	0.00290	162	58.48	51.49			0.4423		26.26	2.58	7.49
6	1	Catch Basin Type M-2, L = 13,17 (P-1569 Mod)	30th Way WS - LT	4 0	4 0	None	2 00	19.20	7 20	12 00	61 48	54 53	1458 67	1458 29	227	96	0.00290	167	58.50	51.52	51.84	0.3736	0.0267	21.94	1.53	4.45	7.46
			Subtotals		82 0	None																					
7	1	Catch Basin Type M-1, L = 6 (P-1569)	29th Street ES - RT	8 0	4 0	4 0	2 00	21 50	11 70	9 80	57 56	50 25	1452 45	1452 39	155	96	0.00102	156	52 46	47.82	48.76	0.1274	0.0059	7.32	5.50	4.81	7.24
8	1	Catch Basin Type M-1, L = 6 (P-1569)	29th Street WS - LT	8 0	4 0	4 0	2 00	13 70			57 60	52 10	1452 45	1452 39	155	96	0.00102	156	52.45	47.82			0.3124		18.21	3.00	7.28
			Subtotals		8 0	8 0																					
9	1 (gr)	Catch Basin & Apron, Type N, Single (P-1570)	SE Cor 28th St /Grov - R	5 0	5 0	None	2.00	30 10	20 70	9 40	53 60	50.06	1451.60	1449 34	3293	2646	0.00349	2723	49.61	43.11	46.46	0 0773	0.5691	4.43	34.69	1.54	8.49
			Subtotals		5 0	None																					
10	1	Catch Basin Type M-2, L = 13,17 (P-1569 Mod)	28th Street ES - RT	122 0	52 5	69 5	3 00	16 50			55 81	48 13	1450 76	1450 26	406	262	0.00347	403	50.75	46 59			0.0933		5.36	4.18	5.72
11	1	Catch Basin Type M-2, L = 13,17 (P-1569 Mod)	28th Street ES - RT	69 5	30 0	39 5	2 00	16 30			55 63	47 93	1450 76	1450 26	406	262	0 00347	369	50.63	46.55			0 0847		4.86	5.20	6.58
12	1	Catch Basin Type M-2, L = 13,17 (P-1569 Mod)	28th Street WS - LT	122 0	52 5	69 5	3 00	29 10	17 40	11.70	55 04	49 49	1450 76	1450 26	406	262	0.00347	314	50 44	45 16	45 56	0.2259	0.0342	13.05	1.96	2.05	6.36
13	1	Catch Basin Type M-2, L = 13,17 (P-1569 Mod)	28th Street WS - LT	69 5	30 0	39 5	2 00	28 90	17 30	11 60	55 59	50 04	1450 76	1450.26	406	262	0.00347	280	50.32	45 12	45 96	0 2358	0.0724	13.64	4.18	3.05	7.97
14	1	Catch Basin Type M-2, L = 13,17 (P-1569 Mod)	28th Street WS - LT	39 5	20 5	19 0	2 00	27 50			54 14	48 94	1450 34	1450 12	262	98	0.00134	246	50 32	43 58			0 1949		11.24	2.70	8.06
15	1	Catch Basin Type M-2, L = 13,17 (P-1569 Mod)	28th Street ES - RT	39 5	20 5	19 0	2 00	15 30			54 66	46 88	1450 34	1450 12	262	98	0 00134	241	50 31	43 49			0 2216		12 80	5.28	6.67
16	1	Catch Basin Type M-2, L = 13,17 (P-1569 Mod)	28th Street WS - LT	19 0	12 5	6 5	2 00	27 60			53 82	48 27	1450 34	1450 12	262	98	0.00134	212	50 27	43 03			0 1899		10.95	3.05	6.29
17	1	Catch Basin Type M-2, L = 13,17 (P-1569 Mod)	28th Street ES - RT	19 0	12 5	6 5	2 00	15 30			53 80	46 21	1450 34	1450 12	262	98	0.00134	207	50 27	42 95			0 2131		12 30	5.09	6.35
18	1	Catch Basin Type M-2, L = 13,17 (P-1569 Mod)	28th Street WS - LT	12 0	12 0	None	2 00	27 70			53 42	48 37	1450 34	1450 12	262	98	0.00134	178	50.23	42 48			0 2126		12.26	2.55	8.44
19	1	Catch Basin Type M-2, L = 13,17 (P-1569 Mod)	28th Street ES - RT	12 0	12 0	None	2 00	15 50			53 42	46 37	1450 34	1450 12	262	98	0.00134	173	50.22	42.40			0 2561		14.84	4.55	8.52
			Subtotals		255 0	None																					
20	1	Catch Basin Type M-1, L = 10 (P-1569)	SE Cor 28th St /Grov - R	3.0	3 0	None	2 00	21 30	10 10	11 20	51 19	45 93	1448 84	1446 42	2646	1298	0.00254	1328	45.50	36 49	43.99	0 1921	0.6696	11.07	42.04	2.76	12.20
			Subtotals		3 0	None																					
21	1	Catch Basin Type M-2, L = 13,17 (P-1569 Mod)	26th Street WS - LT	71 0	40 0	31 0	3 00	23 40	7 00	16 40	51 29	46 63	1447 14	1446 70	237	98	0.00317	235	47.13	37 14	46.63	0.0000	0 5787	0.00	35.36	1.16	10.65
22	1	Catch Basin Type M-2, L = 13,17 (P-1569 Mod)	26th Street ES - RT	71 0	40 0	31 0	3 00	14 70			51 22	44 33	1447 14	1446 70	237	98	0.00317	230	47.12	37 21			0 4844		28.97	3.39	10.51
23	1	Catch Basin Type M-2, L = 13,17 (P-1569 Mod)	26th Street WS - LT	31 0	19 5	11 5	2 00	23 30	7 10	16 20	50 76	46 67	1447 14	1446 70	237	98	0.00317	201	47 03	37.74	46.67	0 0000	0 5612	0.00	33.45	1.59	10.52
24	1	Catch Basin Type M-2, L = 13,17 (P-1569 Mod)	26th Street ES - RT	31 0	19 5	11 5	2 00	14 60			50 67	44 37	1447 14	1446 70	237	98	0.00317	196	47.01	37 24			0 4884		29.23	3.80	10.93
25	1	Catch Basin Type M-2, L = 13,17 (P-1569 Mod)	26th Street WS - LT	18 5	18 5	None	2 00	23 30	7 20	16 10	50 46	46 21	1447 14	1446 70	237	98	0.00317	167	46.92	36 76	46.21	0 0000	0 5870	0.00	35 94	1.75	11.20
26	1	Catch Basin Type M-2, L = 13,17 (P-1569 Mod)	26th Street ES - RT	18 5	18 5	None	2 00	14 60			50 46	43 41	1447 14	1446 70	237	98	0.00317	162	46 90	36 69			0 4603		27.41	4.55	11.27
			Subtotals		156 0	None																					
27	1	Catch Basin Type M-1, L = 10 (P-1569)	Grovers Ave NS - LT	6 0	10 0	None	2 00	7 00			47 93	43 93	1445 70	1444 00	1298	77	0.00139	246	44.24	36 68			1.0000		90.00	1.50	8.75
			Subtotals		6 0	None																					
28	1	Catch Basin Type M-1, L = 17 (P-1569)	NE Corner Grov/C C - LT	7 0	10 0	None	2 00	8 40			47 54	43 54	1445 70	1444 00	1298	77	0.00139	96	44.03	35 95			1 0000		90.00	1.50	9.09
			Subtotals		7 0	None																					
29	1 (gr)	Catch Basin & Apron, Type N, Single (P-1570)	SE Corner Grov/C C - R	3 0	6 0	None	2 00	40 00	19 70	20 30	46 00	43 00	1444 70	1444 70	77	66	0.00000	67	44 70	34 67	42 30	0 0356	0 3759	2.04	22 08	1.00	9.33
			Subtotals		3 0	None																					
			TOTALS		525	None																					

ADDITIONAL CATCH BASINS

30	1 (gr)	Catch Basin & Apron, Type N, Single (P-1570)	Grovers Ave SS - RT				2 00				61 25	57 25						4310		50 73						2.00	8.52
31	1	Catch Basin Type M-1, L = 6 (P-1569)	Grovers Ave NS - LT				2 00				59 89	55 88						3775		48 60						1.51	8.59
32	1 (gr)	Catch Basin & Apron, Type N, Single (P-1570)	Grovers Ave SS - RT				2 00				58 65	54 65						3525		47 40						2.00	9.25
33	1 (gr)	Catch Basin & Apron, Type N, Single (P-1570)	28th St Det Bas Drain - RT				2 00				53 40	49 40						173		n/a						2.00	5.20
34	1	Catch Basin Type M-1, L = 6 (P-1569)	Grovers Ave NS - LT				2 00				52 85	48 85						2040		39 56						1.50	10.79
35	1	Catch Basin Type M-1, L = 6 (P-1569)	Grovers Ave SS - RT				2 00				52 50	48 50						1893		38 53						1.50	11.47
36	1	Catch Basin Type M-1, L = 6 (P-1569)	Grovers Ave NS - LT				2 00				50 14	45 14						942		36 63						2.50	11.01

COMPUTE DEPTH OF COVER OVER MAIN LINE AND CONNECTOR PIPE FOR INPUT TO D-LOAD CALCULATION (see above for connector pipe cover depths)

Note: Depth measured to CROWN of pipe

Main Line - Grovers Ave

	DS STA	US STA	Pipe ID	Max Cvr	@STA	Min Cvr	@STA
	0+71	12+98	8"8 CBC	13 11	7+00	10 09	12+98
	12+98	26+46	84" RCP	10 09	12+98	7 74	26+46
	26+46	32+93	48" RCP	8 45	32+93	7 70	26+46
	32+93	43+37	42" RCP	8 80	38+00	8 42	43+37

Side Streets

	DS STA	US STA	Pipe ID	Max Cvr	@STA	Min Cvr	@STA
26th St	0+98	2+39	60" RCP	11 59	1+04	10 00	2+39
28th St	0+98	2+62	84" RCP	7 66	1+03	6 64	2+62
28th St	2+62	4+06	60" RCP	6 64	2+62	5 36	4+06
29th St	0+96	1+55	24" RCP	8 45	0+96	7 50	1+26
30th Wy	0+86	2+35	48" RCP	7 95	0+96	7 24	2+35

-28-

GROVERS AVENUE STORM DRAIN

Compute the hydraulic profile for the inlet connector pipe. (RCP REPLACES CBC BOX IN THIS CONFIG)

RE: Storm Drain Design Manual, City of Phoenix, 1987, Pages 18, 31-34.

Design data.

Location:	Inlet 1	Inlet 2	Inlet 3	Inlet 4	Inlet 5	Inlet 6	Inlet 7
Pipe material:	rcp	rcp	rcp	rcp	rcp	rcp	rcp
Mannings N-Value, n =	0.012	0.012	0.012	0.012	0.012	0.012	0.012
Pipe diameter (D) =	24 In	24 In	24 In	24 In	24 In	24 In	24 In
Pipe Length (l) =	11.30 Ft	18.30 Ft	11.40 Ft	19.10 Ft	11.10 Ft	19.20 Ft	21.50 Ft
Horiz. Dist. CB Face to CL Rec Pipe =	12.50 Ft	20.50 Ft	12.50 Ft	20.50 Ft	12.50 Ft	20.00 Ft	23.50 Ft
Pipe Slope at Inlet (s) =	0.39470 Ft/Ft	0.40000 Ft/Ft	0.41050 Ft/Ft	0.36850 Ft/Ft	0.44230 Ft/Ft	0.37360 Ft/Ft	0.12740 Ft/Ft
Top of Curb Elevation (tc) =	62.38 Ft	62.47 Ft	61.75 Ft	61.85 Ft	61.48 Ft	61.48 Ft	57.56 Ft
Curb Face Opening (cf) =	8 In	8 In	8 In	8 In	8 In	8 In	8 In
Pipe Diameter, d =	2.00 Ft	2.00 Ft	2.00 Ft	2.00 Ft	2.00 Ft	2.00 Ft	2.00 Ft
Deflection Angle, angle = arctan (s) =	21.54 Deg	21.80 Deg	22.32 Deg	20.23 Deg	23.86 Deg	20.49 Deg	7.26 Deg
Inlet Diameter, di = d / cos (angle) =	2.15 Ft	2.15 Ft	2.16 Ft	2.13 Ft	2.19 Ft	2.14 Ft	2.02 Ft
Maximum Crown Elevation (MaxCEi) = tc - cf/12 - .5 =	61.21	61.30	60.58	60.68	60.31	60.31	56.39
Crown Elevation at Inlet (CEi) =	58.55 ft	56.95 ft	58.56 ft	56.80 ft	58.59 ft	56.67 ft	52.27 ft
Inlet Invert Elevation (ELi) =	56.40 Ft	54.80 Ft	56.40 Ft	54.67 Ft	56.40 Ft	54.53 Ft	50.25 Ft
Design Flow (Q) =	26.00 cfs	26.00 cfs	11.00 cfs	11.00 cfs	4.00 cfs	4.00 cfs	4.00 cfs
Tailwater Elevation (Tw) =	58.68 Ft	58.69 Ft	58.58 Ft	58.59 Ft	58.48 Ft	58.50 Ft	52.45 Ft

Compute flow assuming outlet control.

Velocity, v = Q / (¶(d/12)²/4) =	8.28 Fps	8.28 Fps	3.50 Fps	3.50 Fps	1.27 Fps	1.27 Fps	1.27 Fps
Velocity Head, hv = v²+2g =	1.05 Ft	1.05 Ft	0.19 Ft	0.19 Ft	0.02 Ft	0.02 Ft	0.02 Ft
Friction Slope, Sf = 4.66 * n² * Q² + (d^(16/3)) =	0.01125 Ft/Ft	0.01125 Ft/Ft	0.00201 Ft/Ft	0.00201 Ft/Ft	0.00027 Ft/Ft	0.00027 Ft/Ft	0.00027 Ft/Ft
Entrance Loss Coeficient, Ke =	0.50	0.50	0.50	0.50	0.50	0.50	0.50
Exit Loss Coeficient, Ko =	1	1	1	1	1	1	1
Pipe Loss, hp = Sf * l =	0.13 Ft	0.21 Ft	0.02 Ft	0.04 Ft	0.00 Ft	0.01 Ft	0.01 Ft
Entrance Loss, he = Ke * hv =	0.53 Ft	0.53 Ft	0.09 Ft	0.09 Ft	0.01 Ft	0.01 Ft	0.01 Ft
Exit Loss, ho = Ko * hv =	1.05 Ft	1.05 Ft	0.19 Ft	0.19 Ft	0.02 Ft	0.02 Ft	0.02 Ft
Total Friction Loss, H = hp + he + ho =	1.70 Ft	1.78 Ft	0.31 Ft	0.32 Ft	0.04 Ft	0.04 Ft	0.04 Ft
Headwater Elevation, Hwo = Tw + H =	60.38 Ft	60.47 Ft	58.89 Ft	58.91 Ft	58.52 Ft	58.54 Ft	52.49 Ft

Compute flow assuming inlet control using HEC-12.

Square Edged Headwall							
Q =	26.00 cfs	26.00 cfs	11.00 cfs	11.00 cfs	4.00 cfs	4.00 cfs	4.00 cfs
x = Q / d^2.5 =	4.60	4.60	1.94	1.94	0.71	0.71	0.71
Hw/d =	1.06 Ft/Ft	1.06 Ft/Ft	0.81 Ft/Ft	0.81 Ft/Ft	0.42 Ft/Ft	0.42 Ft/Ft	0.42 Ft/Ft
Hwi = Hw * d + ELi =	58.52 Ft	56.92 Ft	58.01 Ft	56.28 Ft	57.24 Ft	55.37 Ft	51.09 Ft

CALCULATE FREEBOARD AND DEPTH OF BASIN:

Controlling Headwater Condition (Max. of Hwo or Hwi), HW =	60.38 Ft	60.47 Ft	58.89 Ft	58.91 Ft	58.52 Ft	58.54 Ft	52.49 Ft
Freeboard (gutter-HW), FB = tc - cf+12 - HW =	1.33 Ft	1.33 Ft	2.20 Ft	2.27 Ft	2.29 Ft	2.27 Ft	4.40 Ft
Headwater-Tailwater =	1.70 Ft	1.78 Ft	0.31 Ft	0.32 Ft	0.04 Ft	0.04 Ft	0.04 Ft
Headwater-Crown El =	1.83 Ft	3.52 Ft	0.32 Ft	2.11 Ft	-0.07 Ft	1.88 Ft	0.23 Ft
HGL Slope =	13.6360 %	8.6988 %	2.4424 %	1.5649 %	0.3223 %	0.2122 %	0.1832 %

GROVERS AVENUE STORM DRAIN

Inlet 8	Inlet 9	Inlet 10	Inlet 11	Inlet 12	Inlet 13	Inlet 14	Inlet 15	Inlet 16	Inlet 17
rcp	rcp	rcp	rcp	rcp	rcp	rcp	rcp	rcp	rcp
0.012	0.012	0.012	0.012	0.012	0.012	0.012	0.012	0.012	0.012
24 In	24 In	36 In	24 In	36 In	24 In	24 In	24 In	24 In	24 In
13.70 Ft	30.10 Ft	16.50 Ft	16.30 Ft	29.10 Ft	28.90 Ft	27.50 Ft	15.30 Ft	27.60 Ft	15.30 Ft
15.50 Ft	31.00 Ft	18.50 Ft	18.50 Ft	30.50 Ft	30.50 Ft	30.50 Ft	18.50 Ft	30.50 Ft	18.50 Ft
0.31240 Ft/Ft	0.07730 Ft/Ft	0.09330 Ft/Ft	0.08470 Ft/Ft	0.22590 Ft/Ft	0.23580 Ft/Ft	0.19490 Ft/Ft	0.22160 Ft/Ft	0.18990 Ft/Ft	0.21310 Ft/Ft
57.60 Ft	53.60 Ft	55.81 Ft	55.63 Ft	55.04 Ft	55.59 Ft	54.14 Ft	54.66 Ft	53.82 Ft	53.80 Ft
8 In	0 In	8 In	8 In	8 In	8 In	8 In	8 In	8 In	8 In
2.00 Ft	2.00 Ft	3.00 Ft	2.00 Ft	3.00 Ft	2.00 Ft	2.00 Ft	2.00 Ft	2.00 Ft	2.00 Ft
17.35 Deg	4.42 Deg	5.33 Deg	4.84 Deg	12.73 Deg	13.27 Deg	11.03 Deg	12.50 Deg	10.75 Deg	12.03 Deg
2.10 Ft	2.01 Ft	3.01 Ft	2.01 Ft	3.08 Ft	2.05 Ft	2.04 Ft	2.05 Ft	2.04 Ft	2.04 Ft
56.43	53.10	54.64	54.46	53.87	54.42	52.97	53.49	52.65	52.63
54.20 ft	52.07 ft	51.14 ft	49.94 ft	52.57 ft	52.09 ft	50.98 ft	48.93 ft	50.31 ft	48.25 ft
52.10 Ft	50.06 Ft	48.13 Ft	47.93 Ft	49.49 Ft	50.04 Ft	48.94 Ft	46.88 Ft	48.27 Ft	46.21 Ft
4.00 cfs	5.00 cfs	52.50 cfs	30.00 cfs	52.50 cfs	30.00 cfs	20.50 cfs	20.50 cfs	12.50 cfs	12.50 cfs
52.45 Ft	46.91 Ft	50.75 Ft	50.63 Ft	50.44 Ft	50.32 Ft	50.32 Ft	50.31 Ft	50.27 Ft	50.27 Ft
1.27 Fps	1.59 Fps	7.43 Fps	9.55 Fps	7.43 Fps	9.55 Fps	6.53 Fps	6.53 Fps	3.98 Fps	3.98 Fps
0.02 Ft	0.04 Ft	0.85 Ft	1.40 Ft	0.85 Ft	1.40 Ft	0.65 Ft	0.65 Ft	0.24 Ft	0.24 Ft
0.00027 Ft/Ft	0.00042 Ft/Ft	0.00528 Ft/Ft	0.01498 Ft/Ft	0.00528 Ft/Ft	0.01498 Ft/Ft	0.00699 Ft/Ft	0.00699 Ft/Ft	0.00260 Ft/Ft	0.00260 Ft/Ft
0.50	0.50	0.50	0.50	0.50	0.50	0.50	0.50	0.50	0.50
1	1	1	1	1	1	1	1	1	1
0.00 Ft	0.01 Ft	0.09 Ft	0.24 Ft	0.15 Ft	0.43 Ft	0.19 Ft	0.11 Ft	0.07 Ft	0.04 Ft
0.01 Ft	0.02 Ft	0.42 Ft	0.70 Ft	0.42 Ft	0.70 Ft	0.33 Ft	0.33 Ft	0.12 Ft	0.12 Ft
0.02 Ft	0.04 Ft	0.85 Ft	1.40 Ft	0.85 Ft	1.40 Ft	0.65 Ft	0.65 Ft	0.24 Ft	0.24 Ft
0.04 Ft	0.07 Ft	1.36 Ft	2.34 Ft	1.42 Ft	2.53 Ft	1.17 Ft	1.09 Ft	0.44 Ft	0.40 Ft
52.49 Ft	46.98 Ft	52.11 Ft	52.97 Ft	51.86 Ft	52.85 Ft	51.49 Ft	51.40 Ft	50.71 Ft	50.67 Ft
4.00 cfs	5.00 cfs	52.50 cfs	30.00 cfs	52.50 cfs	30.00 cfs	20.50 cfs	20.50 cfs	12.50 cfs	12.50 cfs
0.71	0.88	3.37	5.30	3.37	5.30	3.62	3.62	2.21	2.21
0.42 Ft/Ft	0.49 Ft/Ft	1.10 Ft/Ft	0.65 Ft/Ft	1.10 Ft/Ft	0.65 Ft/Ft	1.13 Ft/Ft	1.13 Ft/Ft	0.87 Ft/Ft	0.87 Ft/Ft
52.94 Ft	51.04 Ft	51.44 Ft	49.23 Ft	52.80 Ft	51.34 Ft	51.21 Ft	49.15 Ft	50.01 Ft	47.95 Ft
52.94 Ft	51.04 Ft	52.11 Ft	52.97 Ft	52.80 Ft	52.85 Ft	51.49 Ft	51.40 Ft	50.71 Ft	50.67 Ft
4.00 Ft	2.56 Ft	3.04 Ft	1.99 Ft	1.57 Ft	2.07 Ft	1.98 Ft	2.60 Ft	2.45 Ft	2.46 Ft
0.49 Ft	4.13 Ft	1.36 Ft	2.34 Ft	2.36 Ft	2.53 Ft	1.17 Ft	1.09 Ft	0.44 Ft	0.40 Ft
-1.26 Ft	-1.02 Ft	0.96 Ft	3.04 Ft	0.24 Ft	0.76 Ft	0.52 Ft	2.47 Ft	0.40 Ft	2.42 Ft
3.1463 %	13.3319 %	7.3377 %	12.6714 %	7.7445 %	8.3047 %	3.8457 %	5.8790 %	1.4307 %	2.1858 %

30

GROVERS AVENUE STORM DRAIN

Inlet 18	Inlet 19	Inlet 20	Inlet 21	Inlet 22	Inlet 23	Inlet 24	Inlet 25	Inlet 26	Inlet 27
rcp	rcp	rcp	rcp	rcp	rcp	rcp	rcp	rcp	rcp
0.012	0.012	0.012	0.012	0.012	0.012	0.012	0.012	0.012	0.012
24 In	24 In	24 In	36 In	36 In	24 In	24 In	24 In	24 In	24 In
27.70 Ft	15.50 Ft	21.30 Ft	23.40 Ft	14.70 Ft	23.30 Ft	14.60 Ft	23.30 Ft	14.60 Ft	7.00 Ft
30.50 Ft	18.50 Ft	22.00 Ft	24.50 Ft	16.50 Ft	24.50 Ft	16.50 Ft	24.50 Ft	16.50 Ft	7.00 Ft
0.21260 Ft/Ft	0.25610 Ft/Ft	0.92100 Ft/Ft	0.00000 Ft/Ft	0.48440 Ft/Ft	0.00000 Ft/Ft	0.48840 Ft/Ft	0.00000 Ft/Ft	0.46030 Ft/Ft	1.00000 Ft/Ft
53.42 Ft	53.42 Ft	51.19 Ft	51.29 Ft	51.22 Ft	50.76 Ft	50.67 Ft	50.46 Ft	50.46 Ft	47.93 Ft
8 In	8 In	8 In	8 In	8 In	8 In	8 In	8 In	8 In	8 In
2.00 Ft	2.00 Ft	2.00 Ft	3.00 Ft	3.00 Ft	2.00 Ft	2.00 Ft	2.00 Ft	2.00 Ft	2.00 Ft
12.00 Deg	14.37 Deg	42.65 Deg	0.00 Deg	25.85 Deg	0.00 Deg	26.03 Deg	0.00 Deg	24.72 Deg	45.00 Deg
2.04 Ft	2.06 Ft	2.72 Ft	3.00 Ft	3.33 Ft	2.00 Ft	2.23 Ft	2.00 Ft	2.20 Ft	2.83 Ft
52.25	52.25	50.02	50.12	50.05	49.59	49.50	49.29	49.29	46.76
50.41 ft	48.43 ft	48.65 ft	49.63 ft	47.66 ft	48.67 ft	46.60 ft	48.21 ft	45.61 ft	46.76 ft
48.37 Ft	46.37 Ft	45.93 Ft	46.63 Ft	44.33 Ft	46.67 Ft	44.37 Ft	46.21 Ft	43.41 Ft	43.93 Ft
12.00 cfs	12.00 cfs	3.00 cfs	40.00 cfs	40.00 cfs	19.50 cfs	19.50 cfs	18.50 cfs	18.50 cfs	6.00 cfs
50.23 Ft	50.22 Ft	45.50 Ft	47.13 Ft	47.12 Ft	47.03 Ft	47.01 Ft	46.92 Ft	46.90 Ft	44.24 Ft
3.82 Fps	3.82 Fps	0.96 Fps	5.66 Fps	5.66 Fps	6.21 Fps	6.21 Fps	5.89 Fps	5.89 Fps	1.91 Fps
0.22 Ft	0.22 Ft	0.01 Ft	0.49 Ft	0.49 Ft	0.59 Ft	0.59 Ft	0.53 Ft	0.53 Ft	0.06 Ft
0.00240 Ft/Ft	0.00240 Ft/Ft	0.00015 Ft/Ft	0.00306 Ft/Ft	0.00306 Ft/Ft	0.00633 Ft/Ft	0.00633 Ft/Ft	0.00570 Ft/Ft	0.00570 Ft/Ft	0.00060 Ft/Ft
0.50	0.50	0.50	0.50	0.50	0.50	0.50	0.50	0.50	0.50
1	1	1	1	1	1	1	1	1	1
0.07 Ft	0.04 Ft	0.00 Ft	0.07 Ft	0.05 Ft	0.15 Ft	0.09 Ft	0.13 Ft	0.08 Ft	0.00 Ft
0.11 Ft	0.11 Ft	0.01 Ft	0.25 Ft	0.25 Ft	0.30 Ft	0.30 Ft	0.27 Ft	0.27 Ft	0.03 Ft
0.22 Ft	0.22 Ft	0.01 Ft	0.49 Ft	0.49 Ft	0.59 Ft	0.59 Ft	0.53 Ft	0.53 Ft	0.06 Ft
0.40 Ft	0.37 Ft	0.02 Ft	0.81 Ft	0.78 Ft	1.03 Ft	0.98 Ft	0.93 Ft	0.88 Ft	0.09 Ft
50.63 Ft	50.59 Ft	45.52 Ft	47.94 Ft	47.90 Ft	48.06 Ft	47.99 Ft	47.85 Ft	47.78 Ft	44.33 Ft
12.00 cfs	12.00 cfs	3.00 cfs	40.00 cfs	40.00 cfs	19.50 cfs	19.50 cfs	18.50 cfs	18.50 cfs	6.00 cfs
2.12	2.12	0.53	2.57	2.57	3.45	3.45	3.27	3.27	1.06
0.85 Ft/Ft	0.85 Ft/Ft	0.34 Ft/Ft	0.95 Ft/Ft	0.95 Ft/Ft	1.11 Ft/Ft	1.11 Ft/Ft	1.09 Ft/Ft	1.09 Ft/Ft	0.56 Ft/Ft
50.07 Ft	48.07 Ft	46.60 Ft	49.48 Ft	47.18 Ft	48.90 Ft	46.60 Ft	48.39 Ft	45.59 Ft	45.04 Ft
50.63 Ft	50.59 Ft	46.60 Ft	49.48 Ft	47.90 Ft	48.90 Ft	47.99 Ft	48.39 Ft	47.78 Ft	45.04 Ft
2.12 Ft	2.16 Ft	3.92 Ft	1.14 Ft	2.65 Ft	1.19 Ft	2.01 Ft	1.40 Ft	2.01 Ft	2.22 Ft
0.40 Ft	0.37 Ft	1.10 Ft	2.35 Ft	0.78 Ft	1.87 Ft	0.98 Ft	1.47 Ft	0.88 Ft	0.80 Ft
0.22 Ft	2.16 Ft	-2.05 Ft	-0.15 Ft	0.24 Ft	0.23 Ft	1.39 Ft	0.18 Ft	2.17 Ft	-1.72 Ft
1.3193 %	2.0171 %	5.0112 %	9.6078 %	4.7424 %	7.6320 %	5.9374 %	5.9934 %	5.3440 %	11.4558 %

GROVERS AVENUE STORM DRAIN

Inlet 28	Inlet 29
rcp	rcp
0.012	0.012
24 In	24 In
8.40 Ft	40.00 Ft
8.40 Ft	38.00 Ft
1.00000 Ft/Ft	0.03550 Ft/Ft
47.54 Ft	46.00 Ft
8 In	0 In
2.00 Ft	2.00 Ft
45.00 Deg	2.03 Deg
2.83 Ft	2.00 Ft
46.37	45.50
46.37 ft	45.00 ft
43.54 Ft	43.00 Ft
7.00 cfs	3.00 cfs
44.03 Ft	44.70 Ft
2.23 Fps	0.96 Fps
0.08 Ft	0.01 Ft
0.00082 Ft/Ft	0.00015 Ft/Ft
0.50	0.50
1	1
0.01 Ft	0.01 Ft
0.04 Ft	0.01 Ft
0.08 Ft	0.01 Ft
0.12 Ft	0.03 Ft
44.15 Ft	44.73 Ft
7.00 cfs	3.00 cfs
1.24	0.53
0.61 Ft/Ft	0.34 Ft/Ft
44.77 Ft	43.67 Ft
44.77 Ft	44.73 Ft
2.11 Ft	1.27 Ft
0.74 Ft	0.03 Ft
-1.60 Ft	-0.27 Ft
8.7856 %	

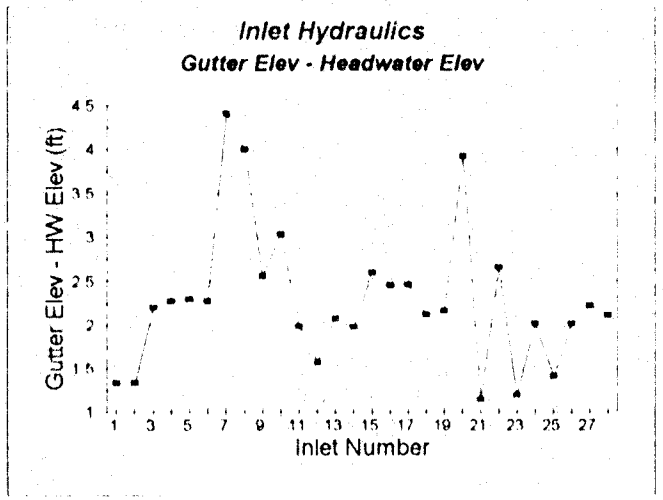

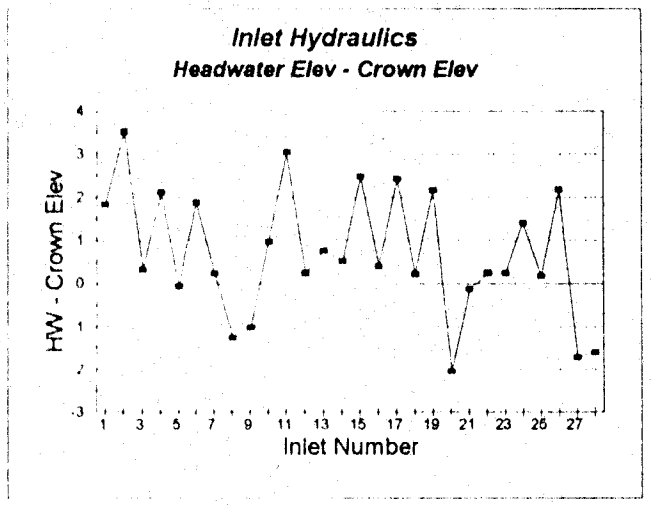

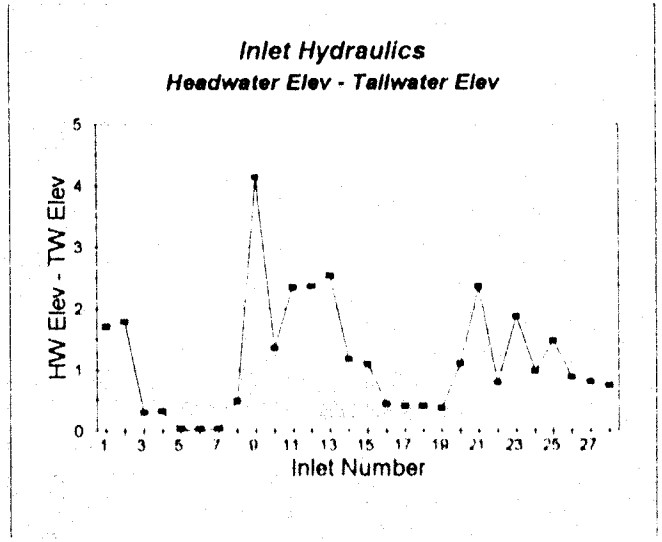

-32-

D. CMP REPLACING CBC ALTERNATIVE CALCULATIONS

Grovers Avenue Storm Drain Lateral

Inlet/Connector Pipe Configuration Summary - CMP (Main Line Pipe is Concrete-Lined) ALTERNATIVE

Inlet No.	Qty	Description	Location	Design Flow (cfs)	Inlet Flow Capacity (cfs)	Flow By (cfs)	CP D (ft)	CP L (ft)	L (ft)	L y/sd	TOC	ELI	HGL UpNode	HGL DNode	STA UpNode	STA DNode	HGL m	STA Inlet	TW Elev	Conn ELI SD	Conn ELI Joint	m to joint	m to SD	< to Joint	< to SD	DEPTH OF COVER VALUES Min Cvr	Max Cvr
1	1	Catch Basin Type M-2, L = 13.17 (P-1569 Mod.)	30th Way ES - RT	40.0	26.0	14.0	2.00	11.30			62.38	56.40	1458.67	1458.29	227	96	0.00290	230	58.68	51.94			0.3947		23.25	3.48	7.94
2	1	Catch Basin Type M-2, L = 13.17 (P-1569 Mod.)	30th Way WS - LT	40.0	26.0	14.0	2.00	18.30	6.20	12.10	62.47	54.80	1458.67	1458.29	227	96	0.00290	235	58.69	51.98	52.32	0.4000	0.0281	23.58	1.61	5.17	7.99
3	1	Catch Basin Type M-2, L = 13.17 (P-1569 Mod.)	30th Way ES - RT	14.0	11.0	3.0	2.00	11.40			61.75	56.40	1458.67	1458.29	227	96	0.00290	196	58.58	51.72			0.4108		24.24	2.85	7.53
4	1	Catch Basin Type M-2, L = 13.17 (P-1569 Mod.)	30th Way WS - LT	14.0	11.0	3.0	2.00	19.10	7.30	11.80	61.85	54.67	1458.67	1458.29	227	96	0.00290	201	58.59	51.75	51.96	0.3686	0.0195	21.62	1.12	4.68	7.60
5	1	Catch Basin Type M-2, L = 13.17 (P-1569 Mod.)	30th Way ES - RT	4.0	4.0	None	2.00	11.10			61.48	56.40	1458.67	1458.29	227	96	0.00290	162	58.48	51.49			0.4423		26.26	2.58	7.49
6	1	Catch Basin Type M-2, L = 13.17 (P-1569 Mod.)	30th Way WS - LT	4.0	4.0	None	2.00	19.20	7.20	12.00	61.48	54.53	1458.67	1458.29	227	96	0.00290	167	58.50	51.52	51.84	0.3736	0.0267	21.94	1.53	4.45	7.48
			Subtotals		82.0	None																					
7	1	Catch Basin Type M-1, L = 6 (P-1569)	29th Street ES - RT	8.0	4.0	4.0	2.00	21.50	11.70	9.80	57.56	50.25	1452.45	1452.39	155	96	0.00102	155	52.45	47.82	48.76	0.1274	0.0959	7.32	5.50	4.81	7.24
8	1	Catch Basin Type M-1, L = 6 (P-1569)	29th Street WS - LT	8.0	4.0	4.0	2.00	13.70			57.60	52.10	1452.45	1452.39	155	96	0.00102	156	52.45	47.82			0.3124		18.21	3.00	7.28
			Subtotals		8.0	8.0																					
9	1 (gr)	Catch Basin & Apron, Type N, Single (P-1570)	SE Cor. 28th St /Grov - R	5.0	5.0	None	2.00	30.10	20.70	9.40	53.60	50.06	1451.60	1449.34	3293	2646	0.00349	2723	49.61	43.11	48.46	0.0773	0.6691	4.43	34.69	1.54	8.49
			Subtotals		5.0	None																					
10	1	Catch Basin Type M-2, L = 13.17 (P-1569 Mod.)	28th Street ES - RT	122.0	52.5	69.5	3.00	16.50			55.81	48.13	1450.76	1450.26	406	262	0.00347	403	50.75	46.59			0.0933		5.36	4.18	5.72
11	1	Catch Basin Type M-2, L = 13.17 (P-1569 Mod.)	28th Street ES - RT	69.5	30.0	39.5	2.00	16.30			55.63	47.93	1450.76	1450.26	406	262	0.00347	369	50.63	46.55			0.0847		4.86	5.20	6.58
12	1	Catch Basin Type M-2, L = 13.17 (P-1569 Mod.)	28th Street WS - LT	122.0	52.5	69.5	3.00	29.10	17.40	11.70	55.04	49.49	1450.76	1450.26	406	262	0.00347	314	50.44	45.16	45.56	0.2259	0.0342	13.05	1.96	2.05	6.38
13	1	Catch Basin Type M-2, L = 13.17 (P-1569 Mod.)	28th Street WS - LT	69.5	30.0	39.5	2.00	28.90	17.30	11.60	55.59	50.04	1450.76	1450.26	406	262	0.00347	280	50.32	45.12	45.96	0.2358	0.0724	13.64	4.15	3.05	7.97
14	1	Catch Basin Type M-2, L = 13.17 (P-1569 Mod.)	28th Street WS - LT	39.5	20.5	19.0	2.00	27.50			54.14	48.94	1450.34	1450.12	262	98	0.00134	246	50.32	43.58			0.1949		11.24	2.70	8.06
15	1	Catch Basin Type M-2, L = 13.17 (P-1569 Mod.)	28th Street ES - RT	39.5	20.5	19.0	2.00	15.30			54.66	46.88	1450.34	1450.12	262	98	0.00134	241	50.31	43.49			0.2216		12.80	5.28	8.67
16	1	Catch Basin Type M-2, L = 13.17 (P-1569 Mod.)	28th Street WS - LT	19.0	12.5	6.5	2.00	27.60			53.62	48.27	1450.34	1450.12	262	98	0.00134	212	50.27	43.03			0.1899		10.95	3.05	8.29
17	1	Catch Basin Type M-2, L = 13.17 (P-1569 Mod.)	28th Street ES - RT	19.0	12.5	6.5	2.00	15.30			53.80	46.21	1450.34	1450.12	262	98	0.00134	207	50.27	42.95			0.2131		12.30	5.09	8.35
18	1	Catch Basin Type M-2, L = 13.17 (P-1569 Mod.)	28th Street WS - LT	12.0	12.0	None	2.00	27.70			53.42	48.37	1450.34	1450.12	262	98	0.00134	178	50.23	42.48			0.2126		12.28	2.55	8.44
19	1	Catch Basin Type M-2, L = 13.17 (P-1569 Mod.)	28th Street ES - RT	12.0	12.0	None	2.00	15.50			53.42	46.37	1450.34	1450.12	262	98	0.00134	173	50.22	42.40			0.2561		14.84	4.55	8.52
			Subtotals		255.0	None																					
20	1	Catch Basin Type M-1, L = 10 (P-1569)	SE Cor. 26th St /Grov - R	3.0	3.0	None	2.00	21.30	10.10	11.20	51.19	46.93	1448.84	1446.42	2646	1298	0.00254	1328	45.50	36.49	43.99	0.1921	0.6696	11.07	42.04	2.76	12.20
			Subtotals		3.0	None																					
21	1	Catch Basin Type M-2, L = 13.17 (P-1569 Mod.)	26th Street WS - LT	71.0	40.0	31.0	3.00	23.40	7.00	16.40	51.29	46.63	1447.14	1446.70	237	98	0.00317	235	47.13	37.14	46.63	0.0000	0.6787	0.00	35.36	1.16	10.65
22	1	Catch Basin Type M-2, L = 13.17 (P-1569 Mod.)	26th Street ES - RT	71.0	40.0	31.0	3.00	14.70			51.22	44.33	1447.14	1446.70	237	98	0.00317	230	47.12	37.21			0.4844		28.97	3.39	10.51
23	1	Catch Basin Type M-2, L = 13.17 (P-1569 Mod.)	26th Street WS - LT	31.0	19.5	11.5	2.00	23.30	7.10	16.20	50.76	46.67	1447.14	1446.70	237	98	0.00317	201	47.03	37.74	46.67	0.0000	0.6512	0.00	33.45	1.59	10.52
24	1	Catch Basin Type M-2, L = 13.17 (P-1569 Mod.)	26th Street ES - RT	31.0	19.5	11.5	2.00	14.60			50.67	44.37	1447.14	1446.70	237	98	0.00317	196	47.01	37.24			0.4884		29.23	3.80	10.93
25	1	Catch Basin Type M-2, L = 13.17 (P-1569 Mod.)	26th Street WS - LT	18.5	18.5	None	2.00	23.30	7.20	16.10	50.46	46.21	1447.14	1446.70	237	98	0.00317	167	46.92	36.76	46.21	0.0000	0.5870	0.00	35.94	1.75	11.20
26	1	Catch Basin Type M-2, L = 13.17 (P-1569 Mod.)	26th Street ES - RT	18.5	18.5	None	2.00	14.60			50.46	43.41	1447.14	1446.70	237	98	0.00317	162	46.90	36.69			0.4603		27.41	4.55	11.27
			Subtotals		156.0	None																					
27	1	Catch Basin Type M-1, L = 10 (P-1569)	Grovers Ave NS - LT	6.0	10.0	None	2.00	7.00			47.93	43.93	1446.70	1444.00	1298	77	0.00139	246	44.24	36.68			1.0000		90.00	1.50	8.75
			Subtotals		6.0	None																					
28	1	Catch Basin Type M-1, L = 17 (P-1569)	NE Corner Grov/C C - LT	7.0	10.0	None	2.00	8.40			47.54	43.54	1446.70	1444.00	1298	77	0.00139	96	44.03	35.95			1.0000		90.00	1.50	9.09
			Subtotals		7.0	None																					
29	1 (gr)	Catch Basin & Apron,Type N,Single (P-1570)	SE Corner Grov/C C - R	3.0	5.0	None	2.00	40.00	19.70	20.30	46.00	43.00	1444.70	1444.70	77	65	0.00000	67	44.70	34.67	42.30	0.0355	0.3759	2.04	22.08	1.00	9.33
			Subtotals		3.0	None																					
			TOTALS		526	None																					

ADDITIONAL CATCH BASINS

30	1 (gr)	Catch Basin & Apron,Type N,Single (P-1570)	Grovers Ave SS - RT				2.00				61.25	57.25						4310		50.73						2.00	8.52
31	1	Catch Basin Type M-1, L = 6 (P-1569)	Grovers Ave NS - LT				2.00				59.89	55.88						3775		48.80						1.51	8.59
32	1 (gr)	Catch Basin & Apron,Type N,Single (P-1570)	Grovers Ave SS - RT				2.00				56.65	54.65						3525		47.40						2.00	9.25
33	1 (gr)	Catch Basin & Apron,Type N,Single (P-1570)	28th St Det Bas Drain - RT				2.00				53.40	49.40						173		n/a						2.00	6.20
34	1	Catch Basin Type M-1, L = 6 (P-1569)	Grovers Ave NS - LT				2.00				52.85	48.85						2040		39.56						1.50	10.79
35	1	Catch Basin Type M-1, L = 6 (P-1569)	Grovers Ave SS - RT				2.00				52.50	48.50						1893		38.53						1.50	11.47
36	1	Catch Basin Type M-1, L = 6 (P-1569)	Grovers Ave NS - LT				2.00				50.14	46.14						942		36.63						2.50	11.01

COMPUTE DEPTH OF COVER OVER MAIN LINE AND CONNECTOR PIPE FOR INPUT TO D-LOAD CALCULATION (see above for connector pipe cover depths)

Note: Depth measured to CROWN of pipe

Main Line - Grovers Ave

DS STA	US STA	Pipe ID	Max Cvr	@STA	Min Cvr	@STA
0+71	12+98	8'8 CBC	13.11	7+00	10.09	12+98
12+98	26+46	84" RCP	10.09	12+98	7.74	26+46
26+46	32+93	48" RCP	8.45	32+93	7.70	26+46
32+93	43+37	42" RCP	8.80	38+00	8.42	43+37

Side Streets

	DS STA	US STA	Pipe ID	Max Cvr	@STA	Min Cvr	@STA
26th St	0+98	2+39	60" RCP	11.59	1+04	10.00	2+39
28th St	0+98	2+62	84" RCP	7.66	1+03	6.64	2+62
28th St	2+62	4+06	60" RCP	6.64	2+62	5.36	4+06
29th St	0+96	1+55	24" RCP	8.45	0+96	7.50	1+26
30th Wy	0+96	2+35	48" RCP	7.95	0+96	7.24	2+35

-33-

GROVERS AVENUE STORM DRAIN

Compute the hydraulic profile for the inlet connector pipe. (Concrete-lined CMP relaces CBC BOX and RCP combination in this configuration, however, connector pipe in unlined CMP)

RE: Storm Drain Design Manual, City of Phoenix, 1987, Pages 18, 31-34

Design data.

Location:	Inlet 1	Inlet 2	Inlet 3	Inlet 4	Inlet 5	Inlet 6	Inlet 7
Pipe material:	cmp	cmp	cmp	cmp	cmp	cmp	cmp
Mannings N-Value, n =	0.024	0.024	0.024	0.024	0.024	0.024	0.024
Pipe diameter (D) =	24 In	24 In	24 In	24 In	24 In	24 In	24 In
Pipe Length (l) =	11.30 Ft	18.30 Ft	11.40 Ft	19.10 Ft	11.10 Ft	19.20 Ft	21.50 Ft
Horiz. Dist. CB Face to CL Rec Pipe =	12.50 Ft	20.50 Ft	12.50 Ft	20.50 Ft	12.50 Ft	20.00 Ft	23.50 Ft
Pipe Slope at Inlet (s) =	0.39470 Ft/Ft	0.40000 Ft/Ft	0.41050 Ft/Ft	0.36850 Ft/Ft	0.44230 Ft/Ft	0.37360 Ft/Ft	0.12740 Ft/Ft
Top of Curb Elevation (tc) =	62.38 Ft	62.47 Ft	61.75 Ft	61.85 Ft	61.48 Ft	61.48 Ft	57.56 Ft
Curb Face Opening (cf) =	8 In	8 In	8 In	8 In	8 In	8 In	8 In
Pipe Diameter, d =	2.00 Ft	2.00 Ft	2.00 Ft	2.00 Ft	2.00 Ft	2.00 Ft	2.00 Ft
Deflection Angle, angle = arctan (s) =	21.54 Deg	21.80 Deg	22.32 Deg	20.23 Deg	23.86 Deg	20.49 Deg	7.26 Deg
Inlet Diameter, di = d / cos (angle) =	2.15 Ft	2.15 Ft	2.16 Ft	2.13 Ft	2.19 Ft	2.14 Ft	2.02 Ft
Maximum Crown Elevation (MaxCEi) = tc - cf/12 - .5 =	61.21	61.30	60.58	60.68	60.31	60.31	56.39
Crown Elevation at Inlet (CEi) =	58.55 ft	56.95 ft	58.56 ft	56.80 ft	58.59 ft	56.67 ft	52.27 ft
Inlet Invert Elevation (ELi) =	56.40 Ft	54.80 Ft	56.40 Ft	54.67 Ft	56.40 Ft	54.53 Ft	50.25 Ft
Design Flow (Q) =	26.00 cfs	26.00 cfs	11.00 cfs	11.00 cfs	4.00 cfs	4.00 cfs	4.00 cfs
Tailwater Elevation (Tw) =	58.68 Ft	58.69 Ft	58.58 Ft	58.59 Ft	58.48 Ft	58.50 Ft	52.45 Ft

Compute flow assuming outlet control.

Velocity, v = Q / (¶(d/12)²/4) =	8.28 Fps	8.28 Fps	3.50 Fps	3.50 Fps	1.27 Fps	1.27 Fps	1.27 Fps
Velocity Head, hv = v²+2g =	1.05 Ft	1.05 Ft	0.19 Ft	0.19 Ft	0.02 Ft	0.02 Ft	0.02 Ft
Friction Slope, Sf = 4.66 * n² * Q² + (d^(16/3)) =	0.04501 Ft/Ft	0.04501 Ft/Ft	0.00806 Ft/Ft	0.00806 Ft/Ft	0.00107 Ft/Ft	0.00107 Ft/Ft	0.00107 Ft/Ft
Entrance Loss Coeficient, Ke =	0.50	0.50	0.50	0.50	0.50	0.50	0.50
Exit Loss Coeficient, Ko =	1	1	1	1	1	1	1
Pipe Loss, hp = Sf * l =	0.51 Ft	0.82 Ft	0.09 Ft	0.15 Ft	0.01 Ft	0.02 Ft	0.02 Ft
Entrance Loss, he = Ke * hv =	0.53 Ft	0.53 Ft	0.09 Ft	0.09 Ft	0.01 Ft	0.01 Ft	0.01 Ft
Exit Loss, ho = Ko * hv =	1.05 Ft	1.05 Ft	0.19 Ft	0.19 Ft	0.02 Ft	0.02 Ft	0.02 Ft
Total Friction Loss, H = hp + he + ho =	2.09 Ft	2.40 Ft	0.37 Ft	0.44 Ft	0.05 Ft	0.06 Ft	0.06 Ft
Headwater Elevation, Hwo = Tw + H =	60.77 Ft	61.09 Ft	58.95 Ft	59.03 Ft	58.53 Ft	58.56 Ft	52.51 Ft

Compute flow assuming inlet control using HEC-12.

Square Edged Headwall							
Q =	26.00 cfs	26.00 cfs	11.00 cfs	11.00 cfs	4.00 cfs	4.00 cfs	4.00 cfs
x = Q / d^2.5 =	4.60	4.60	1.94	1.94	0.71	0.71	0.71
Hw/d =	1.06 Ft/Ft	1.06 Ft/Ft	0.81 Ft/Ft	0.81 Ft/Ft	0.42 Ft/Ft	0.42 Ft/Ft	0.42 Ft/Ft
Hwi = Hw * d + ELi =	58.52 Ft	56.92 Ft	58.01 Ft	56.28 Ft	57.24 Ft	55.37 Ft	51.09 Ft

CALCULATE FREEBOARD AND DEPTH OF BASIN:

Controlling Headwater Condition (Max. of Hwo or Hwi), HW =	60.77 Ft	61.09 Ft	58.95 Ft	59.03 Ft	58.53 Ft	58.56 Ft	52.51 Ft
Freeboard (gutter-HW), FB = tc - cf+12 - HW =	0.95 Ft	0.71 Ft	2.13 Ft	2.16 Ft	2.28 Ft	2.26 Ft	4.38 Ft
Headwater-Tailwater =	2.09 Ft	2.40 Ft	0.37 Ft	0.44 Ft	0.05 Ft	0.06 Ft	0.06 Ft
Headwater-Crown El =	2.22 Ft	4.14 Ft	0.39 Ft	2.22 Ft	-0.06 Ft	1.89 Ft	0.24 Ft
HGL Slope =	16.6873 %	11.7120 %	2.9934 %	2.1278 %	0.3933 %	0.2889 %	0.2563 %

GROVERS AVENUE STORM DRAIN

Inlet 8	Inlet 9	Inlet 10	Inlet 11	Inlet 12	Inlet 13	Inlet 14	Inlet 15	Inlet 16	Inlet 17
cmp	cmp	cmp	cmp	cmp	cmp	cmp	cmp	cmp	cmp
0.024	0.024	0.024	0.024	0.024	0.024	0.024	0.024	0.024	0.024
24 In	24 In	36 In	24 In	36 In	24 In	24 In	24 In	24 In	24 In
13.70 Ft	30.10 Ft	16.50 Ft	16.30 Ft	29.10 Ft	28.90 Ft	27.50 Ft	15.30 Ft	27.60 Ft	15.30 Ft
15.50 Ft	31.00 Ft	18.50 Ft	18.50 Ft	30.50 Ft	30.50 Ft	30.50 Ft	18.50 Ft	30.50 Ft	18.50 Ft
0.31240 Ft/Ft	0.07730 Ft/Ft	0.09330 Ft/Ft	0.08470 Ft/Ft	0.22590 Ft/Ft	0.23580 Ft/Ft	0.19490 Ft/Ft	0.22160 Ft/Ft	0.18990 Ft/Ft	0.21310 Ft/Ft
57.60 Ft	53.60 Ft	55.81 Ft	55.63 Ft	55.04 Ft	55.59 Ft	54.14 Ft	54.66 Ft	53.82 Ft	53.80 Ft
8 In	0 In	8 In	8 In	8 In	8 In	8 In	8 In	8 In	8 In
2.00 Ft	2.00 Ft	3.00 Ft	2.00 Ft	3.00 Ft	2.00 Ft	2.00 Ft	2.00 Ft	2.00 Ft	2.00 Ft
17.35 Deg	4.42 Deg	5.33 Deg	4.84 Deg	12.73 Deg	13.27 Deg	11.03 Deg	12.50 Deg	10.75 Deg	12.03 Deg
2.10 Ft	2.01 Ft	3.01 Ft	2.01 Ft	3.08 Ft	2.05 Ft	2.04 Ft	2.05 Ft	2.04 Ft	2.04 Ft
56.43	53.10	54.64	54.46	53.87	54.42	52.97	53.49	52.65	52.63
54.20 ft	52.07 ft	51.14 ft	49.94 ft	52.57 ft	52.09 ft	50.98 ft	48.93 ft	50.31 ft	48.25 ft
52.10 Ft	50.06 Ft	48.13 Ft	47.93 Ft	49.49 Ft	50.04 Ft	48.94 Ft	46.88 Ft	48.27 Ft	46.21 Ft
4.00 cfs	5.00 cfs	52.50 cfs	30.00 cfs	52.50 cfs	30.00 cfs	20.50 cfs	20.50 cfs	12.50 cfs	12.50 cfs
52.45 Ft	46.91 Ft	50.75 Ft	50.63 Ft	50.44 Ft	50.32 Ft	50.32 Ft	50.31 Ft	50.27 Ft	50.27 Ft
1.27 Fps	1.59 Fps	7.43 Fps	9.55 Fps	7.43 Fps	9.55 Fps	6.53 Fps	6.53 Fps	3.98 Fps	3.98 Fps
0.02 Ft	0.04 Ft	0.85 Ft	1.40 Ft	0.85 Ft	1.40 Ft	0.65 Ft	0.65 Ft	0.24 Ft	0.24 Ft
0.00107 Ft/Ft	0.00166 Ft/Ft	0.02111 Ft/Ft	0.05992 Ft/Ft	0.02111 Ft/Ft	0.05992 Ft/Ft	0.02798 Ft/Ft	0.02798 Ft/Ft	0.01040 Ft/Ft	0.01040 Ft/Ft
0.50	0.50	0.50	0.50	0.50	0.50	0.50	0.50	0.50	0.50
1	1	1	1	1	1	1	1	1	1
0.01 Ft	0.05 Ft	0.35 Ft	0.98 Ft	0.61 Ft	1.73 Ft	0.77 Ft	0.43 Ft	0.29 Ft	0.16 Ft
0.01 Ft	0.02 Ft	0.42 Ft	0.70 Ft	0.42 Ft	0.70 Ft	0.33 Ft	0.33 Ft	0.12 Ft	0.12 Ft
0.02 Ft	0.04 Ft	0.85 Ft	1.40 Ft	0.85 Ft	1.40 Ft	0.65 Ft	0.65 Ft	0.24 Ft	0.24 Ft
0.05 Ft	0.11 Ft	1.62 Ft	3.08 Ft	1.88 Ft	3.83 Ft	1.75 Ft	1.41 Ft	0.65 Ft	0.52 Ft
52.50 Ft	47.02 Ft	52.37 Ft	53.71 Ft	52.32 Ft	54.15 Ft	52.07 Ft	51.72 Ft	50.92 Ft	50.79 Ft
4.00 cfs	5.00 cfs	52.50 cfs	30.00 cfs	52.50 cfs	30.00 cfs	20.50 cfs	20.50 cfs	12.50 cfs	12.50 cfs
0.71	0.88	3.37	5.30	3.37	5.30	3.62	3.62	2.21	2.21
0.42 Ft/Ft	0.49 Ft/Ft	1.10 Ft/Ft	0.65 Ft/Ft	1.10 Ft/Ft	0.65 Ft/Ft	1.13 Ft/Ft	1.13 Ft/Ft	0.87 Ft/Ft	0.87 Ft/Ft
52.94 Ft	51.04 Ft	51.44 Ft	49.23 Ft	52.80 Ft	51.34 Ft	51.21 Ft	49.15 Ft	50.01 Ft	47.95 Ft
52.94 Ft	51.04 Ft	52.37 Ft	53.71 Ft	52.80 Ft	54.15 Ft	52.07 Ft	51.72 Ft	50.92 Ft	50.79 Ft
4.00 Ft	2.56 Ft	2.77 Ft	1.26 Ft	1.57 Ft	0.77 Ft	1.40 Ft	2.27 Ft	2.23 Ft	2.34 Ft
0.49 Ft	4.13 Ft	1.62 Ft	3.08 Ft	2.36 Ft	3.83 Ft	1.75 Ft	1.41 Ft	0.65 Ft	0.52 Ft
-1.26 Ft	-1.02 Ft	1.23 Ft	3.77 Ft	0.24 Ft	2.06 Ft	1.09 Ft	2.79 Ft	0.62 Ft	2.54 Ft
3.1463 %	13.3319 %	8.7497 %	16.6308 %	7.7445 %	12.5628 %	5.7377 %	7.6144 %	2.1367 %	2.8311 %

-35-

GROVERS AVENUE STORM DRAIN

Inlet 18	Inlet 19	Inlet 20	Inlet 21	Inlet 22	Inlet 23	Inlet 24	Inlet 25	Inlet 26	Inlet 27
cmp	cmp	cmp	cmp	cmp	cmp	cmp	cmp	cmp	cmp
0.024	0.024	0.024	0.024	0.024	0.024	0.024	0.024	0.024	0.024
24 In	24 In	24 In	36 In	36 In	24 In	24 In	24 In	24 In	24 In
27.70 Ft	15.50 Ft	21.30 Ft	23.40 Ft	14.70 Ft	23.30 Ft	14.60 Ft	23.30 Ft	14.60 Ft	7.00 Ft
30.50 Ft	18.50 Ft	22.00 Ft	24.50 Ft	16.50 Ft	24.50 Ft	16.50 Ft	24.50 Ft	16.50 Ft	7.00 Ft
0.21260 Ft/Ft	0.25610 Ft/Ft	0.92100 Ft/Ft	0.00000 Ft/Ft	0.48440 Ft/Ft	0.00000 Ft/Ft	0.48840 Ft/Ft	0.00000 Ft/Ft	0.46030 Ft/Ft	1.00000 Ft/Ft
53.42 Ft	53.42 Ft	51.19 Ft	51.29 Ft	51.22 Ft	50.76 Ft	50.67 Ft	50.46 Ft	50.46 Ft	47.93 Ft
8 In	8 In	8 In	8 In	8 In	8 In	8 In	8 In	8 In	8 In
2.00 Ft	2.00 Ft	2.00 Ft	3.00 Ft	3.00 Ft	2.00 Ft	2.00 Ft	2.00 Ft	2.00 Ft	2.00 Ft
12.00 Deg	14.37 Deg	42.65 Deg	0.00 Deg	25.85 Deg	0.00 Deg	26.03 Deg	0.00 Deg	24.72 Deg	45.00 Deg
2.04 Ft	2.06 Ft	2.72 Ft	3.00 Ft	3.33 Ft	2.00 Ft	2.23 Ft	2.00 Ft	2.20 Ft	2.83 Ft
52.25	52.25	50.02	50.12	50.05	49.59	49.50	49.29	49.29	46.76
50.41 ft	48.43 ft	48.65 ft	49.63 ft	47.66 ft	48.67 ft	46.60 ft	48.21 ft	45.61 ft	46.76 ft
48.37 Ft	46.37 Ft	45.93 Ft	46.63 Ft	44.33 Ft	46.67 Ft	44.37 Ft	46.21 Ft	43.41 Ft	43.93 Ft
12.00 cfs	12.00 cfs	3.00 cfs	40.00 cfs	40.00 cfs	19.50 cfs	19.50 cfs	18.50 cfs	18.50 cfs	6.00 cfs
50.23 Ft	50.22 Ft	45.50 Ft	47.13 Ft	47.12 Ft	47.03 Ft	47.01 Ft	46.92 Ft	46.90 Ft	44.24 Ft
3.82 Fps	3.82 Fps	0.96 Fps	5.66 Fps	5.66 Fps	6.21 Fps	6.21 Fps	5.89 Fps	5.89 Fps	1.91 Fps
0.22 Ft	0.22 Ft	0.01 Ft	0.49 Ft	0.49 Ft	0.59 Ft	0.59 Ft	0.53 Ft	0.53 Ft	0.06 Ft
0.00959 Ft/Ft	0.00959 Ft/Ft	0.00060 Ft/Ft	0.01225 Ft/Ft	0.01225 Ft/Ft	0.02532 Ft/Ft	0.02532 Ft/Ft	0.02279 Ft/Ft	0.02279 Ft/Ft	0.00240 Ft/Ft
0.50	0.50	0.50	0.50	0.50	0.50	0.50	0.50	0.50	0.50
1	1	1	1	1	1	1	1	1	1
0.27 Ft	0.15 Ft	0.01 Ft	0.29 Ft	0.18 Ft	0.59 Ft	0.37 Ft	0.53 Ft	0.33 Ft	0.02 Ft
0.11 Ft	0.11 Ft	0.01 Ft	0.25 Ft	0.25 Ft	0.30 Ft	0.30 Ft	0.27 Ft	0.27 Ft	0.03 Ft
0.22 Ft	0.22 Ft	0.01 Ft	0.49 Ft	0.49 Ft	0.59 Ft	0.59 Ft	0.53 Ft	0.53 Ft	0.06 Ft
0.60 Ft	0.48 Ft	0.03 Ft	1.02 Ft	0.92 Ft	1.48 Ft	1.26 Ft	1.33 Ft	1.13 Ft	0.10 Ft
50.83 Ft	50.70 Ft	45.53 Ft	48.15 Ft	48.04 Ft	48.51 Ft	48.27 Ft	48.25 Ft	48.03 Ft	44.34 Ft
12.00 cfs	12.00 cfs	3.00 cfs	40.00 cfs	40.00 cfs	19.50 cfs	19.50 cfs	18.50 cfs	18.50 cfs	6.00 cfs
2.12	2.12	0.53	2.57	2.57	3.45	3.45	3.27	3.27	1.06
0.85 Ft/Ft	0.85 Ft/Ft	0.34 Ft/Ft	0.95 Ft/Ft	0.95 Ft/Ft	1.11 Ft/Ft	1.11 Ft/Ft	1.09 Ft/Ft	1.09 Ft/Ft	0.56 Ft/Ft
50.07 Ft	48.07 Ft	46.60 Ft	49.48 Ft	47.18 Ft	48.90 Ft	46.60 Ft	48.39 Ft	45.59 Ft	45.04 Ft
50.83 Ft	50.70 Ft	46.60 Ft	49.48 Ft	48.04 Ft	48.90 Ft	48.27 Ft	48.39 Ft	48.03 Ft	45.04 Ft
1.92 Ft	2.05 Ft	3.92 Ft	1.14 Ft	2.52 Ft	1.19 Ft	1.74 Ft	1.40 Ft	1.76 Ft	2.22 Ft
0.60 Ft	0.48 Ft	1.10 Ft	2.35 Ft	0.92 Ft	1.87 Ft	1.26 Ft	1.47 Ft	1.13 Ft	0.80 Ft
0.42 Ft	2.27 Ft	-2.05 Ft	-0.15 Ft	0.37 Ft	0.23 Ft	1.67 Ft	0.18 Ft	2.42 Ft	-1.72 Ft
1.9723 %	2.6195 %	5.0112 %	9.6078 %	5.5612 %	7.6320 %	7.6174 %	5.9934 %	6.8562 %	11.4558 %

-36-

GROVERS AVENUE STORM DRAIN

Inlet 28	Inlet 29
cmp	cmp
0.024	0.024
24 In	24 In
8.40 Ft	40.00 Ft
8.40 Ft	38.00 Ft
1.00000 Ft/Ft	0.03550 Ft/Ft
47.54 Ft	46.00 Ft
8 In	0 In
2.00 Ft	2.00 Ft
45.00 Deg	2.03 Deg
2.83 Ft	2.00 Ft
46.37	45.50
46.37 ft	45.00 ft
43.54 Ft	43.00 Ft
7.00 cfs	3.00 cfs
44.03 Ft	44.70 Ft
2.23 Fps	0.96 Fps
0.08 Ft	0.01 Ft
0.00326 Ft/Ft	0.00060 Ft/Ft
0.50	0.50
1	1
0.03 Ft	0.02 Ft
0.04 Ft	0.01 Ft
0.08 Ft	0.01 Ft
0.14 Ft	0.04 Ft
44.17 Ft	44.74 Ft
7.00 cfs	3.00 cfs
1.24	0.53
0.61 Ft/Ft	0.34 Ft/Ft
44.77 Ft	43.67 Ft
44.77 Ft	44.74 Ft
2.11 Ft	1.26 Ft
0.74 Ft	0.04 Ft
-1.60 Ft	-0.26 Ft
8.7856 %	

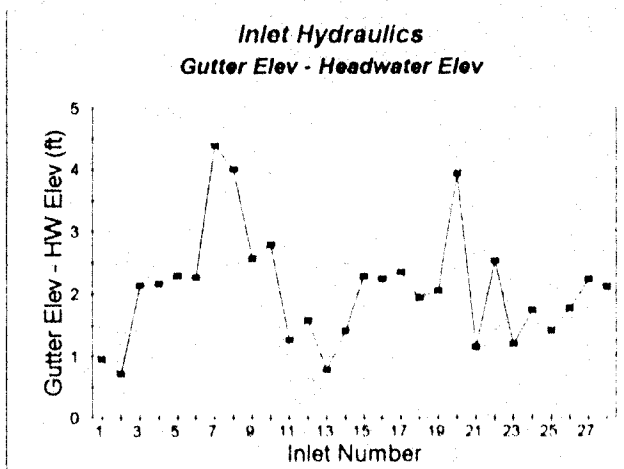

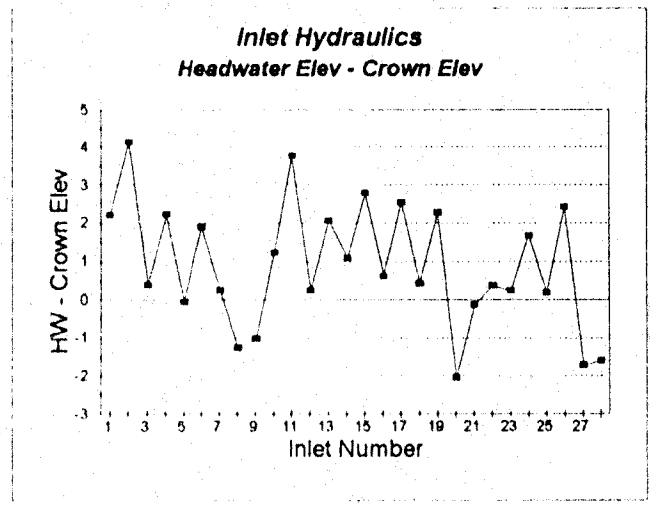

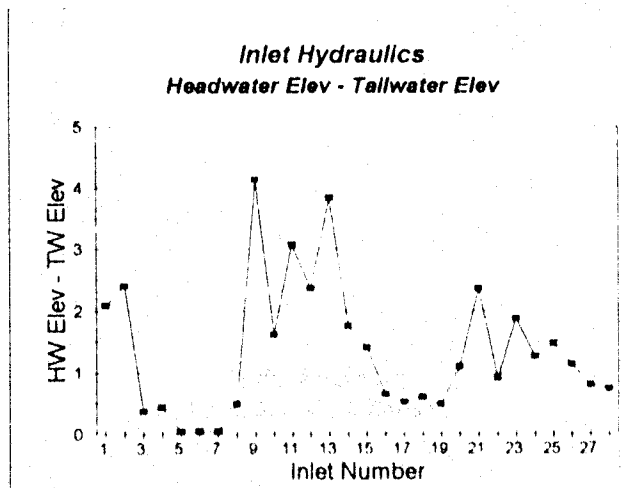

E. RAINFALL/RUNOFF ANALYSIS

GROVERS AVENUE STORM DRAIN LATERAL

CN =	SCS Curve Number =	83.00	
S =	Soil moisture deficit = (1000-10*CN)/CN =	2.05	in
Ia =	Initial abstraction = .2*S =	0.41	in
P =	Rainfall =	4.04	in
Q =	Cumulative excess rainfall runoff = (p-Ia)^2/(p-Ia+s) =	2.32	in
i =	Intensity of runoff = delta(Q)/delta(t)		in/hr

D = Duration = 24.00 hrs

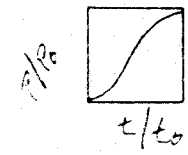

t/to	p/po	t	p	Q	delta(t)	delta(Q)
0.020	0.000	0.49	0.00	0.00		
0.041	0.004	0.98	0.02	0.00	0.49	0.00
0.061	0.008	1.47	0.03	0.00	0.49	0.00
0.082	0.013	1.96	0.05	0.00	0.49	0.00
0.102	0.018	2.45	0.07	0.00	0.49	0.00
0.122	0.022	2.94	0.09	0.00	0.49	0.00
0.143	0.026	3.43	0.11	0.00	0.49	0.00
0.163	0.031	3.92	0.13	0.00	0.49	0.00
0.184	0.035	4.41	0.14	0.00	0.49	0.00
0.204	0.040	4.90	0.16	0.00	0.49	0.00
0.224	0.044	5.39	0.18	0.00	0.49	0.00
0.245	0.048	5.88	0.19	0.00	0.49	0.00
0.265	0.053	6.37	0.21	0.00	0.49	0.00
0.286	0.057	6.86	0.23	0.00	0.49	0.00
0.306	0.062	7.35	0.25	0.00	0.49	0.00
0.327	0.066	7.84	0.27	0.00	0.49	0.00
0.347	0.071	8.33	0.29	0.00	0.49	0.00
0.367	0.075	8.82	0.30	0.00	0.49	0.00
0.388	0.080	9.31	0.32	0.00	0.49	0.00
0.408	0.093	9.80	0.38	0.00	0.49	0.00
0.429	0.107	10.29	0.43	0.00	0.49	0.00
0.449	0.120	10.78	0.48	0.00	0.49	0.00
0.469	0.140	11.27	0.57	0.01	0.49	0.01
0.490	0.170	11.76	0.69	0.03	0.49	0.02
0.510	0.500	12.24	2.02	0.71	0.49	0.68
0.531	0.830	12.73	3.35	1.74	0.49	1.03
0.551	0.860	13.22	3.47	1.84	0.49	0.10
0.571	0.880	13.71	3.56	1.91	0.49	0.07
0.592	0.893	14.20	3.61	1.95	0.49	0.04
0.612	0.907	14.69	3.66	2.00	0.49	0.05
0.633	0.920	15.18	3.72	2.04	0.49	0.04
0.653	0.924	15.67	3.73	2.06	0.49	0.01
0.673	0.928	16.16	3.75	2.07	0.49	0.01
0.694	0.933	16.65	3.77	2.09	0.49	0.02
0.714	0.937	17.14	3.79	2.10	0.49	0.01
0.735	0.942	17.63	3.81	2.12	0.49	0.02
0.755	0.947	18.12	3.83	2.14	0.49	0.02
0.776	0.951	18.61	3.84	2.15	0.49	0.01
0.796	0.956	19.10	3.86	2.17	0.49	0.02
0.816	0.960	19.59	3.88	2.18	0.49	0.01
0.837	0.964	20.08	3.89	2.19	0.49	0.01
0.857	0.969	20.57	3.91	2.21	0.49	0.02
0.878	0.973	21.06	3.93	2.23	0.49	0.01
0.898	0.978	21.55	3.95	2.24	0.49	0.02
0.918	0.982	22.04	3.97	2.26	0.49	0.01
0.939	0.987	22.53	3.99	2.28	0.49	0.02
0.959	0.991	23.02	4.00	2.29	0.49	0.01
0.980	0.995	23.51	4.02	2.30	0.49	0.01
1.000	1.000	24.00	4.04	2.32	0.49	0.02

MORRISON-MAIERLE/CSSA, INC. 18-Mar-94

Tabulate period of peak rainfall excess.

t	P	Q	delta(t)	delta(Q)
11.755	0.687	0.033		
11.878	1.020	0.140	0.122	0.107
12.000	1.353	0.298	0.122	0.158
12.122	1.687	0.490	0.122	0.193
12.245	2.020	0.709	0.122	0.218
12.367	2.353	0.946	0.122	0.238
12.490	2.687	1.199	0.122	0.252
12.612	3.020	1.463	0.122	0.264
12.735	3.353	1.736	0.122	0.273
12.857	3.384	1.761	0.122	0.025
12.980	3.414	1.786	0.122	0.025
13.102	3.444	1.812	0.122	0.025
13.224	3.474	1.837	0.122	0.025
13.347	3.495	1.854	0.122	0.017
13.469	3.515	1.871	0.122	0.017
13.592	3.535	1.888	0.122	0.017
13.714	3.555	1.905	0.122	0.017

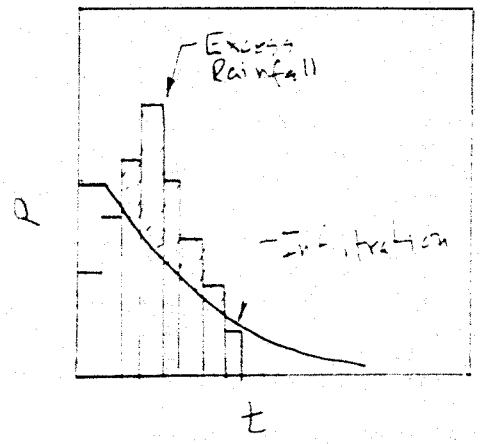

Rearrange incremental excesses in order of decreasing average intensity.

delta(t) (hrs)	delta(Q) (inches)	t (hrs)	Q (inches)	avg(i) (in/hr)	m	b
0.122	0.273	0.122	0.273	2.231	-0.309	2.231
0.122	0.264	0.245	0.537	2.193	-0.361	2.193
0.122	0.252	0.367	0.789	2.149	-0.426	2.149
0.122	0.238	0.490	1.027	2.097	-0.512	2.097
0.122	0.218	0.612	1.245	2.034	-0.626	2.034
0.122	0.193	0.735	1.438	1.957	-0.783	1.957
0.122	0.158	0.857	1.596	1.862	-1.007	1.862
0.122	0.107	0.980	1.703	1.738	-1.389	1.738
0.122	0.025	1.102	1.728	1.568	-1.112	1.568
0.122	0.025	1.224	1.753	1.432	-0.910	1.432
0.122	0.025	1.347	1.779	1.321	-0.759	1.321
0.122	0.025	1.469	1.804	1.228	-0.684	1.228
0.122	0.017	1.592	1.821	1.144	-0.586	1.144
0.122	0.017	1.714	1.838	1.072	-0.508	1.072
0.122	0.017	1.837	1.855	1.010	-0.445	1.010
0.122	0.017	1.959	1.872	0.956		

avg(i) = Average excess intensity = Q/t
i = Compute by interpolation = m t + b

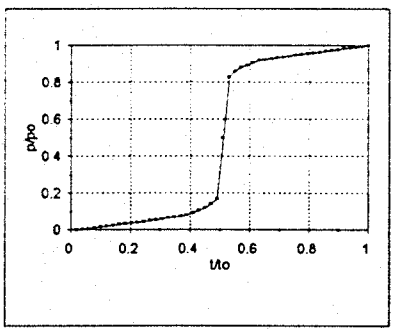

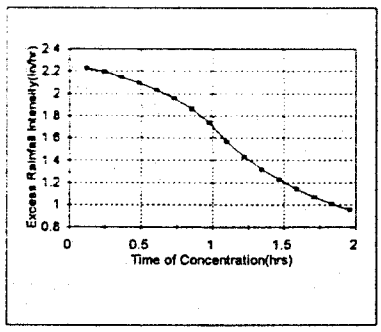

GROVERS AVENUE STORM DRAIN LATERAL

Compute the time of concentration (FCDMC Chp. 3).
Drainage Design Manual for Maricopa County, Arizona, Volume I, Hydrology, June 1, 1992.

Variable	Description	Unit	Value											
# =	Subarea number =		1	2	3	4	5	6	7	8	9	10	11	12a
A =	Drainage Area =	ac	7.8	17.7	27.3	47.8	111.6	137.2	9.1	208.3	20.1	17.0	33.6	28.9
=		sq mi	0.012	0.028	0.043	0.075	0.174	0.214	0.014	0.325	0.031	0.027	0.052	0.045
L =	Stream length =	ft	1,200	1,800	2,250	4,200	4,200	6,600	1,650	6,900	950	1,150	1,800	2,100
=	/5280 =	mile	0.227	0.341	0.426	0.795	0.795	1.250	0.313	1.307	0.180	0.218	0.341	0.398
EL1 =	Upstream Elevation =	ft	1485.0	1490.0	1490.4	1496.0	1488	1520.0	1484.0	1520.0	1478.2	1475.0	1472.0	1471.5
EL2 =	Downstream Elevation =	ft	1478.5	1475.0	1472.0	1471.0	1465.5	1474.5	1471.5	1465.0	1471.5	1468.0	1461.5	1458.0
S =	Stream Slope = (EL1-EL2)/L =	ft/mile	28.60	44.00	43.18	31.43	28.29	36.40	40.00	42.09	37.24	32.14	30.80	33.94
		ft/ft	0.0054	0.0083	0.0082	0.0060	0.0054	0.0069	0.0076	0.0080	0.0071	0.0061	0.0058	0.0064
m =	Factor from Table ~~3.1~~ 5.1 =		-0.00625	-0.00625	-0.00625	-0.00625	-0.00625	-0.00625	-0.00625	-0.00625	-0.00625	-0.00625	-0.00625	-0.00625
b =	Term from Table ~~3.1~~ 5.1 =		0.04	0.04	0.04	0.04	0.04	0.04	0.04	0.04	0.04	0.04	0.04	0.04
Kb =	Resistance coefficient from Table ~~3.1~~ 5.1 Equation													
=	m*log(A)+b =		0.034424	0.0322	0.031027	0.029504	0.027202	0.026642	0.034009	0.025509	0.031858	0.032313	0.030464	0.030869
Tc =	Trial t =	hrs	0.247	0.256	0.283	0.420	0.415	0.479	0.260	0.457	0.194	0.226	0.278	0.294
i =	Excess rainfall intensity by interpolation =	in/hr	2.192	2.189	2.179	2.127	2.128	2.101	2.188	2.111	2.209	2.199	2.181	2.175
Tc =	Time of concentration from Eq. ~~3.2~~ 5.5													
=	11.4*L^0.5*Kb*0.52*S^ -0.31*i^ -0.38 *60 =	min	14.842	15.371	16.984	25.177	24.929	28.728	15.598	27.407	11.655	13.544	16.703	17.645
=	/60 =	hours	0.247	0.256	0.283	0.420	0.415	0.479	0.260	0.457	0.194	0.226	0.278	0.294
err(t) =	Tc - Tc = 0 ?	hours	0.000	0.000	0.000	0.000	0.000	0.000	0.000	0.000	0.000	0.000	0.000	0.000
Lag =	0.6*Tc =	hrs	0.148	0.154	0.170	0.252	0.249	0.287	0.156	0.274	0.117	0.135	0.167	0.176

INPUT TO HEC-1	NO.	1	2	3	4	5	6	7	8	9	10	11	12a
	AREA	0.012	0.028	0.043	0.075	0.174	0.214	0.014	0.325	0.031	0.027	0.052	0.045
	LAG	0.148	0.154	0.170	0.252	0.249	0.287	0.156	0.274	0.117	0.135	0.167	0.176

Q =	Estimated flow = i a =	cfs	17	39	59	102	238	288	20	440	44	37	73	63
Va =	Average flow velocity = L/Tc/3600 =	fps	1.3	2.0	2.2	2.8	2.8	3.8	1.8	4.2	1.4	1.4	1.8	2.0

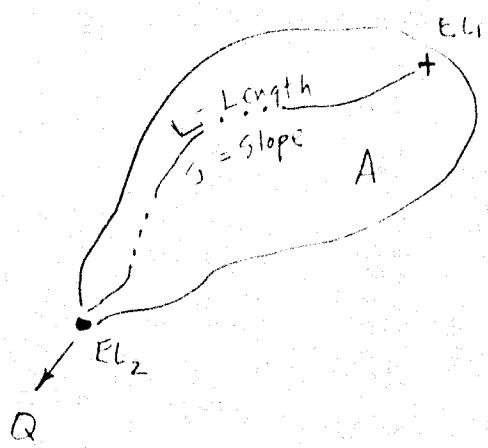

GROVERS AVENUE STORM DRAIN LATERAL

12b	12c	12d	13	14	15	16	17	18	19	20	21	22	23	24
4.8	5.6	0.5	3.7	9.8	25.3	68.8	6.7	0.7	0.9	2.1	6.1	5.6	1.2	1.1
0.008	0.009	0.001	0.006	0.015	0.039	0.108	0.011	0.001	0.001	0.003	0.010	0.009	0.002	0.002
750	765	650	500	650	1,510	3,200	1,000	950	1,060	2,660	1,340	1,200	1,340	1,245
0.142	0.145	0.123	0.095	0.123	0.286	0.606	0.189	0.180	0.201	0.504	0.254	0.227	0.254	0.236
1458.0	1456.0	1457.0	1472.0	1472.0	1468.0	1469.0	1463.8	1465.0	1462.0	1465.0	1456.0	1452.0	1454.0	1451.0
1456.0	1454.0	1454.0	1468.0	1465.8	1462.0	1450.5	1458.0	1462.0	1458.0	1454.0	1450.5	1447.4	1451.0	1447.4
14.08	13.80	24.37	42.24	50.36	20.98	30.53	30.62	16.67	19.92	21.83	21.67	20.24	11.82	15.27
0.0027	0.0026	0.0046	0.0080	0.0095	0.0040	0.0058	0.0058	0.0032	0.0038	0.0041	0.0041	0.0038	0.0022	0.0029
-0.00625	-0.00625	-0.00625	-0.00625	-0.00625	-0.00625	-0.00625	-0.00625	-0.00625	-0.00625	-0.00625	-0.00625	-0.00625	-0.00625	-0.00625
0.04	0.04	0.04	0.04	0.04	0.04	0.04	0.04	0.04	0.04	0.04	0.04	0.04	0.04	0.04
0.035742	0.035338	0.041673	0.036455	0.033812	0.031236	0.028515	0.034819	0.040968	0.040347	0.037986	0.035078	0.035324	0.039438	0.039644
0.248	0.251	0.211	0.145	0.151	0.292	0.362	0.222	0.285	0.283	0.427	0.288	0.280	0.372	0.331
2.192	2.191	2.204	2.224	2.222	2.176	2.151	2.200	2.178	2.179	2.124	2.177	2.181	2.147	2.162
14.906	15.060	12.653	8.699	9.034	17.473	21.692	13.325	17.130	16.984	25.595	17.305	16.778	22.313	19.869
0.248	0.251	0.211	0.145	0.151	0.291	0.362	0.222	0.285	0.283	0.427	0.288	0.280	0.372	0.331
0.000	0.000	0.000	0.000	0.000	0.000	0.000	0.000	0.000	0.000	0.000	0.000	0.000	0.000	0.000
0.149	0.151	0.127	0.087	0.090	0.175	0.217	0.133	0.171	0.170	0.256	0.173	0.168	0.223	0.199
12b	12c	12d	13	14	15	16	17	18	19	20	21	22	23	24
0.008	0.009	0.001	0.006	0.015	0.039	0.108	0.011	0.001	0.001	0.003	0.010	0.009	0.002	0.002
0.149	0.151	0.127	0.087	0.090	0.175	0.217	0.133	0.171	0.170	0.256	0.173	0.168	0.223	0.199
11	12	1	8	22	55	148	15	2	2	4	13	12	3	2
0.8	0.8	0.9	1.0	1.2	1.4	2.5	1.3	0.9	1.0	1.7	1.3	1.2	1.0	1.0

Split Flow Approximation

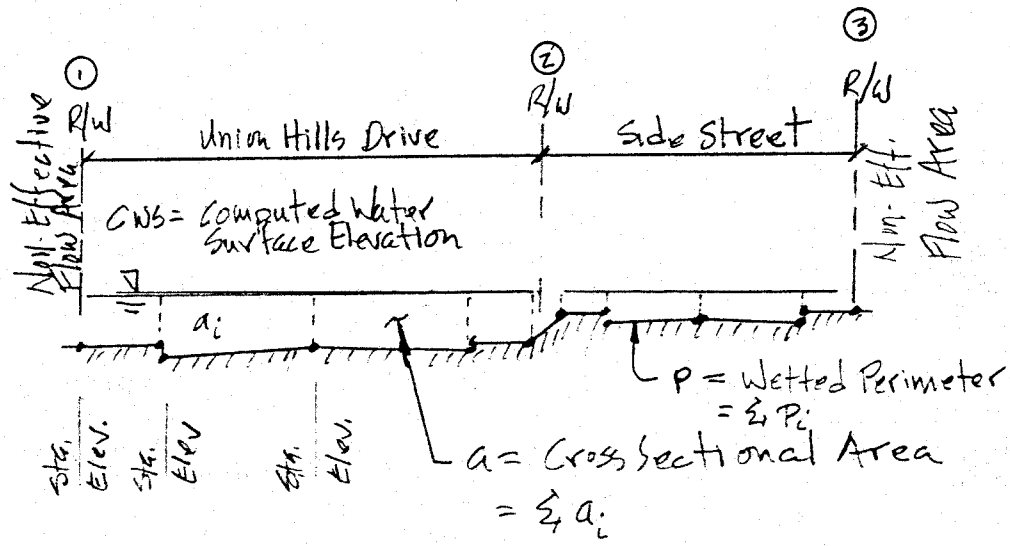

$a = \sum a_i$

$p = \sum p_i$

$r = a/p$

$V = \frac{1.49}{n} r^{2/3} s^{1/2}$

$Q = Va$

Q_i = In Flow

Q_d = Diverted Flow for Hec-1

Q_s = side Street flow

$= Q_i - Q_d$

S = Slope $= \frac{\Delta EL}{L}$

a_i = Incremental Area

p_i = Incremental Perimeter

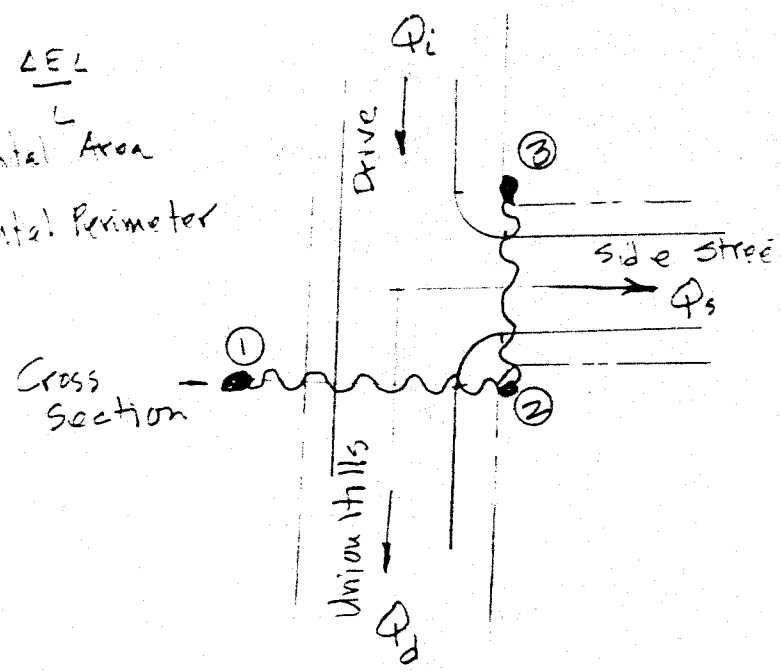

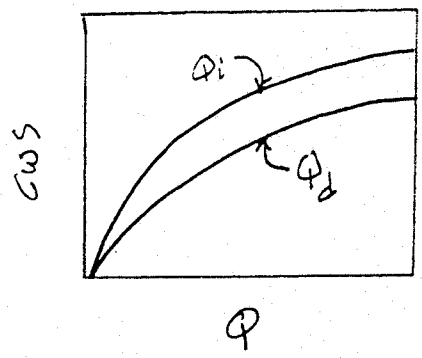

GROVERS AVENUE STORM DRAIN

Concentration Point No. 1.2: Union Hills Drive and 30th Way

sta	elev	cws =	101.18		101.68		102.18
		p	a	p	a	p	a
Union Hills Drive							
116.0	100.70						
111.5	103.00	0.00	0.00	0.00	0.00	5.05	1.49
107.0	101.10	0.00	0.00	0.00	0.00	4.88	0.59
103.4	101.10	3.60	0.29	3.60	2.09	3.60	3.89
96.4	99.80	7.12	5.11	7.12	8.61	7.12	12.11
86.4	100.49	10.02	10.35	10.02	15.35	10.02	20.35
59.0	101.00	27.40	11.92	27.40	25.62	27.40	39.32
25.7	100.00	33.32	22.64	33.32	39.29	33.32	55.94
25.6	100.49	0.50	0.09	0.50	0.14	0.50	0.19
20.0	100.74	5.61	3.16	5.61	5.96	5.61	8.76
9.3	100.80	10.70	4.39	10.70	9.74	10.70	15.09
	Sum =	98.27	57.96	98.27	106.81	108.21	157.73
	r =		0.59		1.09		1.61
	s =		0.008		0.008		0.008
	v =		6.25		9.39		12.18
	Q =		362		1003		1921
30th Way							
16.5	101.60						
21.5	101.57	0.00	0.00	5.00	0.48	5.00	2.98
26.0	101.55	0.00	0.00	4.50	0.54	4.50	2.79
26.1	101.18	0.00	0.00	0.38	0.03	0.38	0.08
45.0	101.30	0.00	0.00	18.90	8.32	18.90	17.77
62.0	101.20	0.00	0.00	17.00	7.31	17.00	15.81
62.0	101.56	0.00	0.00	0.36	0.00	0.36	0.00
66.8	101.62	0.00	0.00	4.80	0.43	4.80	2.83
73.7	101.40	0.00	0.00	6.90	1.17	6.90	4.62
	Sum =	0.00	0.00	57.85	18.28	57.85	46.88
	r =		0.00		0.19		0.48
	s =		0.0226		0.0226		0.0226
	v =		0.00		4.86		9.11
	Q =		0		89		427
	Total Q =		362		1092		2349
	Qi =		362		1092		2349
	Qd =		362		1003		1921

MORRISON-MAIERLE/CSSA, INC. 21-Mar-94

GROVERS AVENUE STORM DRAIN

Concentration Point No. 2.2: Union Hills Drive and 30th Street

sta	elev	cws =	101.02		101.52		102.02
		p	a	p	a	p	a
Union Hills Drive							
115.0	100.80						
93.0	101.10	22.00	1.54	22.00	12.54	22.00	23.54
74.2	100.53	18.81	3.85	18.81	13.25	18.81	22.65
59.0	100.68	15.20	6.31	15.20	13.91	15.20	21.51
26.1	100.00	32.91	22.37	32.91	38.82	32.91	55.27
26.0	100.48	0.49	0.08	0.49	0.13	0.49	0.18
11.5	100.80	14.50	5.51	14.50	12.76	14.50	20.01
11.5	100.80	0.00	0.00	0.00	0.00	0.00	0.00
11.5	100.80	0.00	0.00	0.00	0.00	0.00	0.00
11.5	100.80	0.00	0.00	0.00	0.00	0.00	0.00
11.5	100.80	0.00	0.00	0.00	0.00	0.00	0.00
	Sum =	103.91	39.66	103.91	91.41	103.91	143.16
	r =		0.38		0.88		1.38
	s =		0.0018		0.0018		0.0018
	v =		2.22		3.87		5.22
	Q =		88		354		747
30th Street							
19.8	101.30						
23.4	101.42	0.00	0.00	3.60	0.58	3.60	2.38
28.1	101.37	0.00	0.00	4.70	0.59	4.70	2.94
28.2	101.02	0.00	0.00	0.36	0.03	0.36	0.08
45.4	101.15	0.00	0.00	17.20	7.48	17.20	16.08
64.3	101.16	0.00	0.00	18.90	6.90	18.90	16.35
64.4	101.50	0.00	0.00	0.35	0.02	0.35	0.07
68.9	101.57	0.00	0.00	0.00	0.00	4.50	2.18
72.1	101.50	0.00	0.00	0.00	0.00	3.20	1.55
	Sum =	0.00	0.00	45.12	15.60	52.82	41.63
	r =		0.00		0.15		0.40
	s =		0.0126		0.0126		0.0126
	v =		0.00		3.15		6.06
	Q =		0		49		252
	Total Q =		88		403		999
	Qi =		88		403		999
	Qd =		88		354		747

MORRISON-MAIERLE/CSSA, INC. 21-Mar-94

GROVERS AVENUE STORM DRAIN

Concentration Point No. 3.2: Union Hills Drive and 29th Street

sta	elev	cws =	100.37		100.87		101.37
		p	a	p	a	p	a
Union Hills Drive							
120.0	101.10						
86.0	100.90	0.00	0.00	0.00	0.00	34.00	12.58
80.0	100.10	0.00	0.00	6.05	2.22	6.05	5.22
68.7	100.69	0.00	0.00	11.32	5.37	11.32	11.02
54.2	100.68	0.00	0.00	14.50	2.68	14.50	9.93
29.6	100.00	24.61	0.74	24.61	13.04	24.61	25.34
18.0	99.30	11.62	8.35	11.62	14.15	11.62	19.95
10.0	100.90	8.16	2.16	8.16	6.16	8.16	10.16
0.0	100.80	0.00	0.00	10.00	0.20	10.00	5.20
0.0	100.80	0.00	0.00	0.00	0.00	0.00	0.00
0.0	100.80	0.00	0.00	0.00	0.00	0.00	0.00
	Sum =	44.39	11.25	86.26	43.82	120.26	99.40
	r =		0.25		0.99		2.24
	s =		0.0036		0.0036		0.0036
	v =		2.39		5.91		10.20
	Q =		27		259		1014
29th Street							
14.2	101.20						
26.3	100.37	0.00	0.00	12.13	1.03	12.13	7.08
36.6	100.53	0.00	0.00	10.30	4.33	10.30	9.48
55.4	100.39	0.00	0.00	18.80	7.71	18.80	17.11
55.5	100.86	0.00	0.00	0.48	0.02	0.48	0.07
59.9	101.06	0.00	0.00	0.00	0.00	4.40	1.80
75.2	101.00	0.00	0.00	0.00	0.00	15.30	5.20
75.2	101.00	0.00	0.00	0.00	0.00	0.00	0.00
75.2	101.00	0.00	0.00	0.00	0.00	0.00	0.00
	Sum =	0.00	0.00	41.71	13.09	61.42	40.74
	r =		0.00		0.29		0.92
	s =		0.004		0.004		0.004
	v =		0.00		2.78		5.93
	Q =		0		36		242
	Total Q =		27		295		1256
	Qi =		27		295		1256
	Qd =		27		259		1014

MORRISON-MAIERLE/CSSA, INC. 21-Mar-94

GROVERS AVENUE STORM DRAIN

Concentration Point No. 4.2: Union Hills Drive and 28th Street

sta	elev	cws =	100.7		101.2		101.7
		p	a	p	a	p	a
Union Hills Drive							
120.0	100.20						
103.0	101.00	17.02	1.70	17.02	10.20	17.02	18.70
94.0	99.20	9.18	5.40	9.18	9.90	9.18	14.40
78.0	100.35	16.04	14.80	16.04	22.80	16.04	30.80
69.0	100.63	9.00	1.89	9.00	6.39	9.00	10.89
29.8	100.00	39.21	15.09	39.21	34.69	39.21	54.29
29.7	100.56	0.57	0.04	0.57	0.09	0.57	0.14
24.2	100.76	5.50	0.22	5.50	2.97	5.50	5.72
0.0	100.90	0.00	0.00	24.20	8.95	24.20	21.05
0.0	100.90	0.00	0.00	0.00	0.00	0.00	0.00
0.0	100.90	0.00	0.00	0.00	0.00	0.00	0.00
	Sum =	96.52	39.14	120.72	96.00	120.72	156.00
	r =		0.41		0.99		1.62
	s =		0.008		0.008		0.008
	v =		4.87		8.85		12.24
	Q =		190		850		1909
28th Street							
27.2	101.29						
31.8	101.20	0.00	0.00	0.00	0.00	4.60	2.09
31.9	100.70	0.00	0.00	0.51	0.02	0.51	0.07
55.4	100.81	0.00	0.00	23.50	10.46	23.50	22.21
75.0	101.00	0.00	0.00	19.60	5.78	19.60	15.58
75.0	101.00	0.00	0.00	0.00	0.00	0.00	0.00
75.0	101.00	0.00	0.00	0.00	0.00	0.00	0.00
75.0	101.00	0.00	0.00	0.00	0.00	0.00	0.00
75.0	101.00	0.00	0.00	0.00	0.00	0.00	0.00
	Sum =	0.00	0.00	43.61	16.26	48.21	39.96
	r =		0.00		0.17		0.41
	s =		0.0092		0.0092		0.0092
	v =		0.00		2.90		5.29
	Q =		0		47		211
	Total Q =		190		897		2121
	Qi =		190		897		2121
	Qd =		190		850		1909

MORRISON-MAIERLE/CSSA, INC. 21-Mar-94

GROVERS AVENUE STORM DRAIN

Concentration Point No. 5: Union Hills Drive and 26th Street

sta	elev	cws =	101.3		101.8		102.3
		p	a	p	a	p	a
Union Hills Drive							
120.0	101.20						
95.0	99.60	25.05	22.50	25.05	35.00	25.05	47.50
66.7	100.27	28.31	38.63	28.31	52.78	28.31	66.93
56.5	100.43	10.20	9.69	10.20	14.79	10.20	19.89
21.5	100.00	35.00	37.97	35.00	55.47	35.00	72.97
21.4	100.58	0.59	0.10	0.59	0.15	0.59	0.20
15.8	100.73	5.60	3.61	5.60	6.41	5.60	9.21
0.0	101.10	15.80	6.08	15.80	13.98	15.80	21.88
0.0	101.10	0.00	0.00	0.00	0.00	0.00	0.00
0.0	101.10	0.00	0.00	0.00	0.00	0.00	0.00
0.0	101.10	0.00	0.00	0.00	0.00	0.00	0.00
	Sum =	120.56	118.59	120.56	178.59	120.56	238.59
	r =		0.98		1.48		1.98
	s =		0.008		0.008		0.008
	v =		8.79		11.55		14.01
	Q =		1042		2062		3342
26th Street							
17.4	102.21						
21.9	102.12	0.00	0.00	0.00	0.00	4.50	0.61
22.0	101.64	0.00	0.00	0.00	0.00	0.49	0.04
60.8	101.51	0.00	0.00	38.80	8.73	38.80	28.13
60.9	102.08	0.00	0.00	0.58	0.00	0.58	0.05
65.3	102.08	0.00	0.00	0.00	0.00	4.40	0.97
80.7	101.30	0.00	0.00	15.42	1.69	15.42	9.39
80.7	101.30	0.00	0.00	0.00	0.00	0.00	0.00
80.7	101.30	0.00	0.00	0.00	0.00	0.00	0.00
	Sum =	0.00	0.00	54.80	10.42	64.19	39.19
	r =		0.00		0.09		0.33
	s =		0.0092		0.0092		0.0092
	v =		0.00		1.86		4.50
	Q =		0		19		176
	Total Q =		1042		2082		3519
	Qi =		1042		2082		3519
	Qd =		1042		2062		3342

MORRISON-MAIERLE/CSSA, INC. 21-Mar-94

GROVERS AVENUE STORM DRAIN

Concentration Point Nos. 13 & 14:

sta	elev	cws =	101.51		102.01		102.51
		p	a	p	a	p	a
16.5	101.60						
21.5	101.57	0.00	0.00	5.00	2.13	5.00	4.63
26.0	101.55	0.00	0.00	4.50	2.03	4.50	4.28
26.1	101.18	0.38	0.01	0.38	0.06	0.38	0.11
45.0	101.30	18.90	5.10	18.90	14.55	18.90	24.00
62.0	101.20	17.00	4.42	17.00	12.92	17.00	21.42
62.0	101.56	0.36	0.00	0.36	0.00	0.36	0.00
66.8	101.62	0.00	0.00	4.80	2.02	4.80	4.42
73.7	101.40	0.00	0.00	6.90	3.45	6.90	6.90
73.7	101.40	0.00	0.00	0.00	0.00	0.00	0.00
73.7	101.40	0.00	0.00	0.00	0.00	0.00	0.00
	Sum =	36.64	9.54	57.85	37.15	57.85	65.75
	r =		0.26		1.01		1.79
	s =		0.008		0.008		0.008
	v =		3.62		8.97		13.12
	Q =		35		333		863
16.5	101.93						
21.5	101.90	0.00	0.00	5.00	0.48	5.00	2.98
26.0	101.88	0.00	0.00	4.50	0.54	4.50	2.79
26.1	101.51	0.00	0.00	0.38	0.03	0.38	0.08
45.0	101.63	0.00	0.00	18.90	8.32	18.90	17.77
62.0	101.53	0.00	0.00	17.00	7.31	17.00	15.81
62.0	101.89	0.00	0.00	0.36	0.00	0.36	0.00
66.8	101.95	0.00	0.00	4.80	0.43	4.80	2.83
73.7	101.73	0.00	0.00	6.90	1.17	6.90	4.62
	Sum =	0.00	0.00	57.85	18.28	57.85	46.88
	r =		0.00		0.50		1.28
	s =		0.0226		0.0226		0.0226
	v =		0.00		9.39		17.60
	Q =		0		172		825
	Total Q =		35		505		1688
	Qi =		35		505		1688
	Qd =		35		333		863

MORRISON-MAIERLE/CSSA, INC. 21-Mar-94

GROVERS AVENUE STORM DRAIN

Concentration Point Nos. 12B.2 @ 28th Street & Libby

sta	elev	cws =	100.66		101.16		101.66
		p	a	p	a	p	a
28th Street							
0.0	100.90						
16.0	100.59	0.00	0.00	16.00	6.64	16.00	14.64
20.0	100.48	4.00	0.50	4.00	2.50	4.00	4.50
20.5	100.00	0.69	0.21	0.69	0.46	0.69	0.71
44.0	100.39	23.50	10.93	23.50	22.68	23.50	34.43
67.0	100.11	23.00	9.43	23.00	20.93	23.00	32.43
67.5	100.61	0.71	0.15	0.71	0.40	0.71	0.65
71.5	100.73	0.00	0.00	4.00	1.96	4.00	3.96
90.0	98.70	18.61	17.48	18.61	26.73	18.61	35.98
99.5	98.90	9.50	17.67	9.50	22.42	9.50	27.17
103.5	100.14	4.19	4.56	4.19	6.56	4.19	8.56
	Sum =	84.21	60.93	104.21	111.28	104.21	163.03
	r =		0.72		1.32		1.94
	s =		0.0054		0.0054		0.0054
	v =		5.88		8.79		11.34
	Q =		358		978		1849
Libby Street							
0.0	100.90						
16.0	101.07	0.00	0.00	16.00	2.80	16.00	10.80
20.0	101.05	0.00	0.00	4.00	0.40	4.00	2.40
20.5	100.70	0.00	0.00	0.61	0.14	0.61	0.39
36.0	100.68	0.00	0.00	15.50	7.28	15.50	15.03
51.4	100.66	0.00	0.00	15.40	7.55	15.40	15.25
52.0	100.99	0.00	0.00	0.68	0.20	0.68	0.50
56.0	101.09	0.00	0.00	4.00	0.48	4.00	2.48
71.0	101.20	0.00	0.00	15.00	0.22	15.00	7.72
	Sum =	0.00	0.00	71.20	19.08	71.20	54.58
	r =		0.00		0.23		0.65
	s =		0.0016		0.0016		0.0016
	v =		0.00		1.48		2.98
	Q =		0		28		162
	Total Q =		358		1006		2011
	Qi =		358		1006		2011
	Qd=		358		978		1849

MORRISON-MAIERLE/CSSA, INC. 21-Mar-94

GROVERS AVENUE STORM DRAIN

Concentration Point Nos. 12A.2 @ 28th Street & Charleston

sta	elev	cws =	100.75		101.25		101.75
		p	a	p	a	p	a
28th Street							
0.0	101.10						
16.0	100.60	0.00	0.00	16.01	6.40	16.01	14.40
20.0	100.50	4.00	0.80	4.00	2.80	4.00	4.80
20.5	100.00	0.71	0.25	0.71	0.50	0.71	0.75
44.0	100.43	23.50	12.57	23.50	24.32	23.50	36.07
67.0	100.07	23.00	11.50	23.00	23.00	23.00	34.50
67.5	100.57	0.71	0.22	0.71	0.47	0.71	0.72
71.5	100.69	4.00	0.48	4.00	2.48	4.00	4.48
85.5	102.00	0.00	0.00	0.00	0.00	14.06	5.67
99.5	98.90	14.34	4.20	14.34	11.20	14.34	18.20
99.5	98.90	0.00	0.00	0.00	0.00	0.00	0.00
	Sum =	70.26	30.02	86.27	71.17	100.33	119.59
	r =		0.43		1.01		1.70
	s =		0.0066		0.0066		0.0066
	v =		4.58		8.14		11.51
	Q =		137		579		1376
Charleston							
0.0	101.10						
16.0	101.15	0.00	0.00	16.00	2.00	16.00	10.00
20.0	101.10	0.00	0.00	4.00	0.50	4.00	2.50
20.5	100.80	0.00	0.00	0.58	0.15	0.58	0.40
36.0	100.80	0.00	0.00	15.50	6.98	15.50	14.73
51.2	100.75	0.00	0.00	15.20	7.22	15.20	14.82
51.5	101.07	0.00	0.00	0.44	0.10	0.44	0.25
56.0	101.15	0.00	0.00	4.50	0.63	4.50	2.88
71.0	101.40	0.00	0.00	0.00	0.00	15.00	7.12
	Sum =	0.00	0.00	56.22	17.58	71.22	52.70
	r =		0.00		0.25		0.75
	s =		0.0118		0.0118		0.0118
	v =		0.00		4.28		8.91
	Q =		0		75		469
	Total Q =		137		654		1845
	Qi =		137		654		1845
	Qd=		137		579		1376

MORRISON-MAIERLE/CSSA, INC. 21-Mar-94

Morrison Maierle/CSSA INC.
ENGINEERS
PLANNERS
SURVEYORS
4621 North 16th Street • Suite D-401 • Phoenix, Arizona 85016 • 602/277-2828

PROJECT GROVERS AVE STORM DRAIN LATERAL
PROJECT NO. _____ SHEET ___ OF ___
CALCULATED BY _____ DATE _____
CHECKED BY _____ DATE _____

REVISED REACH ROUTES

REACH	HI	LO	LENGTH	SLOPE	TYPE	WIDTH
13-15	1468	1462	1150	0.0052	TRAP	50
13-14	1468	1465.8	700	0.0031	"	"
14-15	1465.8	1462	1150	0.0033	"	"
18-17	1462	1458	1060	0.0038	CIRC	3.5
17-20	1458	1454	660	0.0061	"	4
19-12D	1458	1454	660	0.0061	TRAP	50
1-9	1478.5	1471.5	900	0.0078	"	"
9-10	1471.5	1468	450	0.0078	"	"
1-2	1478.5	1475	340	0.0103	"	"
2-10	1475	1468	1150	0.0061	"	"
10-11	1468	1461.5	1550	0.0042	"	"
2-3	1475	1472	780	0.0038	"	"
3-11	1472	1461.5	1840	0.0057	"	"
11-12B	1461.5	1456	790	0.0070	CIRC	4
3-4	1472	1471	680	0.0015	TRAP	50
4-12A	1471	1458	1950	0.0067	"	"
12A-12B	1458	1456	260	0.0077	"	"
12B-12C	1456	1454	390	0.0051	"	"
20-21	1454	1450.5	1300	0.0027	CIRC	7
4-5	1471	1465.5	1030	0.0053	TRAP	50
12A-16	1458	1450.5	1755	0.0043	"	"
12B-16	1456	1450.5	1505	0.0037		

CU 21 $A_{Tarig.}$ - S1/2 STREET = 268,939 A_{83} = 216 939 80.66% = 66.9518
A_{98} = 52,000 19.34% = 18.9532
85.9050 ≈ 86

```
FLOOD HYDROGRAPH PACKAGE  (HEC-1)
          MAY  1991
        VERSION 4.0.1E

RUN DATE  03/11/94  TIME  04:09:39
```

```
U.S. ARMY CORPS OF ENGINEERS
HYDROLOGIC ENGINEERING CENTER
      609 SECOND STREET
    DAVIS, CALIFORNIA 95616
        (916) 551-1748
```

```
X     X  XXXXXXX   XXXXX          X
X     X  X        X     X        XX
X     X  X        X              X
XXXXXXX  XXXX     X       XXXXX  X
X     X  X        X              X
X     X  X        X     X        X
X     X  XXXXXXX   XXXXX         XXX
```

THIS PROGRAM REPLACES ALL PREVIOUS VERSIONS OF HEC-1 KNOWN AS HEC1 (JAN 73), HEC1GS, HEC1DB, AND HEC1KW.

THE DEFINITIONS OF VARIABLES -RTIMP- AND -RTIOR- HAVE CHANGED FROM THOSE USED WITH THE 1973-STYLE INPUT STRUCTURE.
THE DEFINITION OF -AMSKK- ON RM-CARD WAS CHANGED WITH REVISIONS DATED 28 SEP 81. THIS IS THE FORTRAN77 VERSION
NEW OPTIONS: DAMBREAK OUTFLOW SUBMERGENCE , SINGLE EVENT DAMAGE CALCULATION, DSS:WRITE STAGE FREQUENCY,
DSS:READ TIME SERIES AT DESIRED CALCULATION INTERVAL LOSS RATE:GREEN AND AMPT INFILTRATION
KINEMATIC WAVE: NEW FINITE DIFFERENCE ALGORITHM

HEC-1 INPUT PAGE 1

```
LINE          ID.......1.......2.......3.......4.......5.......6.......7.......8.......9......10

  1           ID       MORRISON-MAIERLE/CSSA,
  2           ID       BRUCE J. FRIEDHOFF, P.E
  3           ID       PROJECT NO.
  4           ID
  5           ID       GROVERS AVENUE STORM DRAIN LATERAL
  6           ID       FROM CAVE CREEK ROAD TO 32ND STREET
  7           ID
  8           ID
  9           ID
 10           ID
 11           ID
 12           ID
 13           ID
 14           ID
 15           ID
 16           ID
              *DIAGRAM
 17           IT       1  121093     715    2000
 18           IO       5
 19           IN      30

 20           KK      13
 21           KM          RUNOFF FROM SUBAREA                13
```

```
22          BA   0.006
23          LS             83       0
24          UD   0.087
25          PB    4.04
26          PC   0.000   0.004   0.008   0.013   0.018   0.022   0.026   0.031   0.035   0.040
27          PC   0.044   0.048   0.053   0.057   0.062   0.066   0.071   0.075   0.080   0.093
28          PC   0.107   0.120   0.140   0.170   0.500   0.830   0.860   0.880   0.893   0.907
29          PC   0.920   0.924   0.928   0.933   0.937   0.942   0.947   0.951   0.956   0.960
30          PC   0.964   0.969   0.973   0.978   0.982   0.987   0.991   0.995   1.000   1.000
```

Taken from NBS/Lowry TR-20 Code

```
31          KK    13.1
32          KM           DIVERT FLOW
33          DT    13.2
34          DI       0      35     505    1688
35          DQ       0       1     172     825

36          KK    13.3
37          KM           REACH ROUTE FROM                        13-15
38          RK    1150  0.0052   0.015            TRAP      50       0

39          KK    13.3
40          KM           RETRIEVE DIVERTED FLOW
41          DR    13.2

42          KK    13.4
43          KM           REACH ROUTE FROM                        13-14
44          RK     700  0.0031   0.015            TRAP      50       0
```



```
LINE        ID.......1.......2.......3.......4.......5.......6.......7.......8.......9......10

45          KK      14
46          KM           RUNOFF FROM SUBAREA                     14
47          BA   0.015
48          LS             83       0
49          UD   0.090

50          KK    14.1   ADD HYDROGRAPH
51          HC       2

52          KK    14.1
53          KM           DIVERT FLOW
54          DT    14.2
55          DI       0      35     505    1688
56          DQ       0       1     172     825

57          KK    14.3
58          KM           REACH ROUTE FROM                        14-15
59          RK    1150  0.0033   0.015            TRAP      50       0

60          KK      15
61          KM           RUNOFF FROM SUBAREA                     15
62          BA   0.039
63          LS             83       0
64          UD   0.175

65          KK    15.1   ADD HYDROGRAPH
66          HC       3

67          KK      18
```

```
 68          KM          RUNOFF FROM SUBAREA                    18
 69          BA   0.001
 70          LS             98       0
 71          UD   0.171

 72          KK    18.1   ADD HYDROGRAPH
 73          HC       2

 74          KK   18-17
 75          KM          REACH ROUTE FROM                      18-17
 76          RK    1060  0.0038   0.012           CIRC     3.5       0

 77          KK      17
 78          KM          RUNOFF FROM SUBAREA                    17
 79          BA   0.011
 80          LS             83       0
 81          UD   0.133

 82          KK    17.1
 83          KM          DIVERT FLOW
 84          DT    17.2
 85          DI       0     7.5      15
 86          DQ       0     0.1     7.5
```



```
LINE         ID.......1.......2.......3.......4.......5.......6.......7.......8.......9.......10

 87          KK    17.1   ADD HYDROGRAPH
 88          HC       2

 89          KK   17-20
 90          KM          REACH ROUTE FROM                      17-20
 91          RK     660  0.0061   0.012           CIRC       4       0

 92          KK    17.3
 93          KM          RETRIEVE DIVERTED FLOW
 94          DR    17.2

 95          KK      19
 96          KM          RUNOFF FROM SUBAREA                    19
 97          BA   0.001
 98          LS             98       0
 99          UD   0.170

100          KK    19.1   ADD HYDROGRAPH
101          HC       2

102          KK  19-12D
103          KM          REACH ROUTE FROM                     19-12D
104          RK     660  0.0061   0.015           TRAP      50       0

105          KK     12D
106          KM          RUNOFF FROM SUBAREA                   12D
107          BA   0.001
108          LS             98       0
109          UD   0.127

110          KK   12D.1   ADD HYDROGRAPH
111          HC       2
```

```
112          KK     20
113          KM          RUNOFF FROM SUBAREA                    20
114          BA   0.003
115          LS             98       0
116          UD   0.256

117          KK    20.1   ADD HYDROGRAPH
118          HC       2

119          KK       1
120          KM          RUNOFF FROM SUBAREA                    1
121          BA   0.012
122          LS             83       0
123          UD   0.148

124          KK     1.2
125          KM          DIVERT FLOW
126          DT     1.2
127          DI       0     362    1092    2349
128          DQ       0     361    1003    1921
                                   HEC-1 INPUT                                        PAGE  4

LINE         ID.......1.......2.......3.......4.......5.......6.......7.......8.......9......10


129          KK     1-9
130          KM          REACH ROUTE FROM                       1-9
131          RK     900  0.0078   0.015           TRAP      50       0

132          KK       9
133          KM          RUNOFF FROM SUBAREA                    9
134          BA   0.031
135          LS             83       0
136          UD   0.117

137          KK     9.1   ADD HYDROGRAPH
138          HC       2

139          KK   RET1
140          KM          ROUTE INFLOW THROUGH RETENTION BASIN
141          KO       3
142          RS       1    ELEV    1466
143          SA    0.05    0.18    0.24    0.24
144          SE    1466    1468    1470    1472
145          SS    1470      50       3     1.5

146          KK    9-10
147          KM          REACH ROUTE FROM                       9-10
148          RK     450  0.0078   0.015           TRAP      50       0

149          KK       2
150          KM          RUNOFF FROM SUBAREA                    2
151          BA   0.028
152          LS             83       0
153          UD   0.154

154          KK     1.3
155          KM          RETRIEVE DIVERTED FLOW 1.2
156          DR     1.2

157          KK     1-2
```

```
158        KM          REACH ROUTE FROM                      1-2
159        RK    340  0.0103   0.015          TRAP     50       0

160        KK    2.1   ADD HYDROGRAPH
161        HC      2

162        KK    2.1
163        KM          DIVERT FLOW
164        DT    2.2
165        DI      0     88     403     999
166        DQ      0     87     354     747

167        KK   2-10
168        KM          REACH ROUTE FROM                     2-10
169        RK   1150  0.0061   0.015          TRAP     50       0
1                                   HEC-1 INPUT                                          PAGE  5

LINE       ID.......1.......2.......3.......4.......5.......6.......7.......8.......9......10


170        KK     10
171        KM          RUNOFF FROM SUBAREA                   10
172        BA  0.027
173        LS             83       0
174        UD  0.135

175        KK   10.1   ADD HYDROGRAPH
176        HC      3

177        KK   RET2
178        KM          ROUTE INFLOW THROUGH RETENTION BASIN
179        KO      3
180        RS      2   ELEV    1464
181        SA   0.20   0.33    0.39    0.39
182        SE   1464   1466    1468    1470
183        SS   1468     50       3     1.5

184        KK  10-11
185        KM          REACH ROUTE FROM                     10-11
186        RK   1550  0.0042   0.015          TRAP     50       0

187        KK    2.2
188        KM          RETRIEVE DIVERTED FLOW
189        DR    2.2

190        KK    2-3
191        KM          REACH ROUTE FROM                      2-3
192        RK    780  0.0038   0.015          TRAP     50       0

193        KK      3
194        KM          RUNOFF FROM SUBAREA                   3
195        BA  0.043
196        LS             83       0
197        UD  0.170

198        KK    3.1   ADD HYDROGRAPH
199        HC      2

200        KK    3.1
201        KM          DIVERT FLOW
202        DT    3.2
```

```
203        DI      0     27    295   1256
204        DQ      0     26    259   1014

205        KK   3-11
206        KM          REACH ROUTE FROM                      3-11
207        RK   1840  0.0057   0.015          TRAP     50      0

208        KK   14.3
209        KM          RETRIEVE DIVERTED FLOW
210        DR   14.2
```



```
LINE       ID.......1.......2.......3.......4.......5.......6.......7.......8.......9......10


211        KK     11
212        KM          RUNOFF FROM SUBAREA                   11
213        BA   0.052
214        LS            83       0
215        UD   0.167

216        KK   11.1   ADD HYDROGRAPH
217        HC      4

218        KK  11-12B
219        KM          REACH ROUTE FROM                    11-12B
220        RK    790  0.0070   0.015          CIRC      4      0

221        KK    3.3
222        KM          RETRIEVE DIVERTED FLOW
223        DR    3.2

224        KK    3-4
225        KM          REACH ROUTE FROM                      3-4
226        RK    680  0.0015   0.015          TRAP     50      0

227        KK      4
228        KM          RUNOFF FROM SUBAREA                   4
229        BA   0.075
230        LS            83       0
231        UD   0.252

232        KK    4.1   ADD HYDROGRAPH
233        HC      2

234        KK    4.1
235        KM          DIVERT FLOW
236        DT    4.2
237        DI      0    190    897   2121
238        DQ      0    189    850   1909

239        KK   4-12A
240        KM          REACH ROUTE FROM                     4-12A
241        RK   1950  0.0070   0.015          TRAP     50      0

242        KK    12A
243        KM          RUNOFF FROM SUBAREA                   12A
244        BA   0.045
245        LS            83       0
246        UD   0.176
```

```
 247          KK   12A.1   ADD HYDROGRAPH
 248          HC       2
1                                        HEC-1 INPUT                                                    PAGE  7

LINE          ID.......1.......2.......3.......4.......5.......6.......7.......8.......9......10


 249          KK   12A.1
 250          KM           DIVERT FLOW
 251          DT   12A.2
 252          DI       0     137     654
 253          DQ       0     0.1      75

 254          KK   12A-B
 255          KM           REACH ROUTE FROM                      12A-12B
 256          RK     260  0.0077   0.015            TRAP      50       0

 257          KK     12B
 258          KM           RUNOFF FROM SUBAREA                     12B
 259          BA   0.008
 260          LS              83       0
 261          UD   0.149

 262          KK   12B.1   ADD HYDROGRAPH
 263          HC       2

 264          KK   12B.1
 265          KM           DIVERT FLOW
 266          DT   12B.2
 267          DI       0     358    1006
 268          DQ       0     0.1      25

 269          KK   12B-C
 270          KM           REACH ROUTE FROM                      12B-12C
 271          RK     390  0.0051   0.015            TRAP      50       0

 272          KK     12C
 273          KM           RUNOFF FROM SUBAREA                     12C
 274          BA   0.009
 275          LS              86       0
 276          UD   0.151

 277          KK   12C.1   ADD HYDROGRAPH
 278          HC       2

 279          KK    20.2   ADD HYDROGRAPH AT 28TH STREET
 280          HC       3

 281          KK   20-21
 282          KM           REACH ROUTE FROM                      20-21
 283          RK    1300  0.0027   0.012            CIRC       7       0

 284          KK     4.2
 285          KM           RETRIEVE DIVERTED FLOW
 286          DR     4.2
1                                        HEC-1 INPUT                                                    PAGE  8

LINE          ID.......1.......2.......3.......4.......5.......6.......7.......8.......9......10


 287          KK     4-5
```

```
288          KM          REACH ROUTE FROM                        4-5
289          RK    1020  0.0053   0.015           TRAP      50       0

290          KK       5
291          KM          RUNOFF FROM SUBAREA                     5
292          BA   0.174
293          LS              83       0
294          UD   0.249

295          KK     5.1  ADD HYDROGRAPH
296          HC       2

297          KK     5.1
298          KM          DIVERT FLOW
299          DT     5.2
300          DI       0    1042    2082    3519
301          DQ       0    1041    2062    3342

302          KK   12A.3
303          KM          RETRIEVE DIVERTED FLOW
304          DR   12A.2

305          KK  12A-16
306          KM          REACH ROUTE FROM                    12A-16
307          RK    1755  0.0043   0.015           TRAP      50       0

308          KK   12B.1
309          KM          RETRIEVE DIVERTED FLOW
310          DR   12B.1

311          KK  12B-16
312          KM          REACH ROUTE FROM                    12B-16
313          RK    1505  0.0037   0.015           TRAP      50       0

314          KK      16
315          KM          RUNOFF FROM SUBAREA                    16
316          BA   0.108
317          LS              83       0
318          UD   0.217

319          KK      21
320          KM          RUNOFF FROM SUBAREA                    21
321          BA   0.010
322          LS              66       0
323          UD   0.173

324          KK    16.1  ADD HYDROGRAPH
325          HC       5
```



```
LINE         ID.......1.......2.......3.......4.......5.......6.......7.......8.......9......10


326          KK      23
327          KM          RUNOFF FROM SUBAREA                    23
328          BA   0.002
329          LS              98       0
330          UD   0.223

331          KK    21.1  ADD HYDROGRAPH
332          HC       2
```

```
333          KK    21.2   ADD HYDROGRAPH
334          HC       2

335          KK   21-22
336          KM           REACH ROUTE FROM                      21-22
337          RK    1200  0.0026   0.012           CIRC       8       0

338          KK      22
339          KM           RUNOFF FROM SUBAREA                   22
340          BA   0.009
341          LS              86       0
342          UD   0.168

343          KK      24
344          KM           RUNOFF FROM SUBAREA                   24
345          BA   0.002
346          LS              98       0
347          UD   0.199

348          KK    22.1   ADD HYDROGRAPH
349          HC       3
350          ZZ
```

SCHEMATIC DIAGRAM OF STREAM NETWORK

```
INPUT
 LINE     (V) ROUTING          ---> DIVERSION OF PUMP FLOW

 NO.      (.) CONNECTOR        <---) RETURN OF DIVERTED OR PUMPED FLOW

 29          13
             .
             .
 33          .-------->    13.2
 31       13.1
             V
             V
 36       13.3
             .
             .
 41          .          .-------    13.2
 39          .       13.3
             .          V
             .          V
 42          .       13.4
             .          .
             .          .
 45          .          .         14
             .          .          .
             .          .          .
 50          .       14.1............
             .          .
             .          .
 54          .          .-------->   14.2
 52          .       14.1
             .          V
             .          V
 57          .       14.3
             .          .
             .          .
 60          .          .         15
```

```
                .          .          .
                .          .          .
 65          15.1.......................
                .
                .
 67             .         18
                .          .
                .          .
 72          18.1............
               V
               V
 74         18-17
                .
                .
 77             .         17
                .          .
                .          .
 84             .          .-------->    17.2
 82             .       17.1
                .          .
                .          .
 87          17.1............
               V
               V
 89         17-20
                .
                .
 91             .          .<--------    17.2
 92             .       17.3
                .          .
                .          .
 95             .          .         19
                .          .          .
                .          .          .
100             .       19.1............
                .          V
                .          V
102             .     19-12D
                .          .
                .          .
105             .          .        12D
                .          .          .
                .          .          .
110             .     12D.1............
                .          .
                .          .
112             .          .         20
                .          .          .
                .          .          .
117             .       20.1............
                .          .
                .          .
119             .          .          1
                .          .          .
                .          .          .
126             .          .          .-------->    1.2
124             .          .        1.2
                .          .          V
                .          .          V
129             .          .        1-9
                .          .          .
```

30TH WAY & U.H.

```
132                          9
137                     9.1............
                         V
                         V
139                    RET1
                         V
                         V
146                    9-10
149                          2
156                                   <-------     1.2
154                                        1.3
                                            V
                                            V
157                                        1-2
160                             2.1............
164                                   -------     2.2
162                             2.1
                                 V
                                 V
167                            2-10
170                                        10
175                     10.1.......................
                         V
                         V
177                    RET2
                         V
                         V
184                    10-11
189                                   -------     2.2
187                             2.2
                                 V
                                 V
190                            2-3
193                                        3
198                             3.1............
202                                   ------->     3.2
200                             3.1
                                 V
```

30TH STREET & U.H.

29TH STREET

```
                                V
205                           3-11
                                .
                                .
210                             .<-------   14.2
208                             .      14.3
                                .        .
                                .        .
211                             .        .        11
                                .        .         .
                                .        .         .
216                         11.1.................
                              V
                              V
218                         11-12B
                              .
                              .
223                             .<-------   3.2
221                           3.3
                              V
                              V
224                           3-4
                              .
                              .
227                             .        4
                                .        .
                                .        .
232                           4.1............
                              .
                              .
236                             .------->  4.2
234                           4.1
                              V
                              V
239                         4-12A
                              .
                              .
242                             .      12A
                                .        .
                                .        .
247                         12A.1...........
                              .
                              .
251                             .------->  12A.2
249                         12A.1
                              V
                              V
254                         12A-B
                              .
                              .
257                             .      12B
                                .        .
                                .        .
262                         12B.1......................
                              .
                              .
266                           .------->  12B.2
264                         12B.1
                              V
                              V
269                         12B-C
```

28th Street & U.H.

28th & Charleston

28th & Libby

```
                .         .         .
                .         .         .
272             .         .         .        12C
                .         .         .          .
                .         .         .          .
277             .         .      12C.1.........
                .         .         .
                .         .         .
279          20.2.......................
               V
               V
281         20-21
                .
                .
286             .         .<-------     4.2
284             .       4.2
                .         V
                .         V
287             .       4-5
                .         .
                .         .
290             .         .          5
                .         .          .
                .         .          .
295             .       5.1............
                .         .
                .         .
299             .         .------->     5.2
297             .       5.1
                .         .
                .         .
304             .         .          .<-------   12A.2
302             .         .      12A.3
                .         .          V
                .         .          V
305             .         .     12A-16
                .         .          .
                .         .          .
310             .         .          .          .<-------   12B.2
308             .         .          .      12B.3
                .         .          .          V
                .         .          .          V
311             .         .          .     12B-16
                .         .          .          .
                .         .          .          .
314             .         .          .          .         16
                .         .          .          .          .
                .         .          .          .          .
319             .         .          .          .          .         21
                .         .          .          .          .          .
                .         .          .          .          .          .
324             .       16.1.........................................
                .         .
                .         .
326             .         .         23
                .         .          .
                .         .          .
331             .       21.1............
                .         .
                .         .
333          21.2............
```

26th Street & U.H.

```
            V
            V
335       21-22
            .
            .
338         .         22
            .          .
            .          .
343         .          .         24
            .          .          .
            .          .          .
348       22.1.......................

(****) RUNOFF ALSO COMPUTED AT THIS LOCATION
```

```
****************************************
*                                      *
*  FLOOD HYDROGRAPH PACKAGE  (HEC-1)   *
*            MAY   1991                *
*         VERSION 4.0.1E               *
*                                      *
* RUN DATE  03/11/94  TIME  04:09:39   *
*                                      *
****************************************
```

```
****************************************
*                                      *
*   U.S. ARMY CORPS OF ENGINEERS       *
*   HYDROLOGIC ENGINEERING CENTER      *
*         609 SECOND STREET            *
*      DAVIS, CALIFORNIA 95616         *
*          (916) 551-1748              *
*                                      *
****************************************
```

MORRISON-MAIERLE/CSSA.
BRUCE J. FRIEDHOFF, P.E
PROJECT NO.

GROVERS AVENUE STORM DRAIN LATERAL
FROM CAVE CREEK ROAD TO 32ND STREET

```
18 ID        OUTPUT CONTROL VARIABLES
                  IPRNT          5  PRINT CONTROL
                  IPLOT          0  PLOT CONTROL
                  QSCAL         0.  HYDROGRAPH PLOT SCALE

  IT         HYDROGRAPH TIME DATA
                   NMIN          1  MINUTES IN COMPUTATION INTERVAL
                  IDATE      12JU93  STARTING DATE
                  ITIME        0715  STARTING TIME
                     NQ        2000  NUMBER OF HYDROGRAPH ORDINATES
                 NDDATE      2   93  ENDING DATE
                 NDTIME        1634  ENDING TIME
                  ICENT          19  CENTURY MARK

            COMPUTATION INTERVAL    0.02 HOURS
                 TOTAL TIME BASE   33.32 HOURS
```

```
ENGLISH UNITS
    DRAINAGE AREA          SQUARE MILES
    PRECIPITATION DEPTH    INCHES
    LENGTH, ELEVATION      FEET
    FLOW                   CUBIC FEET PER SECOND
    STORAGE VOLUME         ACRE-FEET
    SURFACE AREA           ACRES
    TEMPERATURE            DEGREES FAHRENHEIT


*** FDXRUT - NEWTON RAPHSON FAILEDFIXED POINT ITERATION USED - ITERATION=  1



*** FDXRUT - NEWTON RAPHSON FAILEDFIXED POINT ITERATION USED - ITERATION=  1



*** FDXRUT - NEWTON RAPHSON FAILEDFIXED POINT ITERATION USED - ITERATION=  1



* *** *** *** *** *** *** *** *** *** *** *** *** *** *** *** *** *** *** *** *** *** *** *** *** *** *** *** *** *** *** *** ***


         **************
         *            *
139 KK   *    RET1    *
         *            *
         **************

141 KO         OUTPUT CONTROL VARIABLES
                     IPRNT           3  PRINT CONTROL
                     IPLOT           0  PLOT CONTROL
                     QSCAL          0.  HYDROGRAPH PLOT SCALE

             HYDROGRAPH ROUTING DATA

142 RS         STORAGE ROUTING
                     NSTPS           1  NUMBER OF SUBREACHES
                      ITYP        ELEV  TYPE OF INITIAL CONDITION
                    RSVRIC     1466.00  INITIAL CONDITION
                         X        0.00 WORKING R AND D COEFFICIENT

143 SA                AREA         0.1        0.2        0.2        0.2

144 SE         ELEVATION     1466.00    1468.00    1470.00    1472.00

145 SS         SPILLWAY
                      CREL     1470.00  SPILLWAY CREST ELEVATION
                     SPWID       50.00  SPILLWAY WIDTH
                      COQW        3.00  WEIR COEFFICIENT
                      EXPW        1.50  EXPONENT OF HEAD

                                           ***
```

COMPUTED STORAGE-ELEVATION DATA

STORAGE	0.00	0.22	0.64	1.12
ELEVATION	1466.00	1468.00	1470.00	1472.00

COMPUTED OUTFLOW-ELEVATION DATA

OUTFLOW	0.00	0.00	0.07	0.58	1.96	4.66	9.09	15.71	24.95	37.25
ELEVATION	1466.00	1470.00	1470.01	1470.02	1470.06	1470.10	1470.15	1470.22	1470.30	1470.40
OUTFLOW	53.03	72.75	96.83	125.71	159.83	199.62	245.52	297.97	357.41	424.26
ELEVATION	1470.50	1470.62	1470.75	1470.89	1471.04	1471.21	1471.39	1471.58	1471.78	1472.00

COMPUTED STORAGE-OUTFLOW-ELEVATION DATA

STORAGE	0.00	0.22	0.64	0.64	0.65	0.66	0.67	0.69	0.71	0.73
OUTFLOW	0.00	0.00	0.00	0.58	1.96	4.66	9.09	15.71	24.96	37.24
ELEVATION	1466.00	1468.00	1470.00	1470.02	1470.06	1470.10	1470.15	1470.22	1470.30	1470.40
STORAGE	0.76	0.78	0.81	0.85	0.89	0.93	0.97	1.01	1.06	1.12
OUTFLOW	53.03	72.75	96.83	125.71	159.83	199.61	245.53	297.96	357.40	424.26
ELEVATION	1470.50	1470.62	1470.75	1470.89	1471.04	1471.21	1471.39	1471.58	1471.78	1472.00

*** *** *** *** ***

HYDROGRAPH AT STATION RET1

PEAK FLOW (CFS)	TIME (HR)	MAXIMUM AVERAGE FLOW 6-HR	24-HR	72-HR	33.32-HR
+ 42.	12.52	6.	2.	1.	1.
		(CFS)			
		(INCHES) 1.257	1.398	1.398	1.398
		(AC-FT) 3.	3.	3.	3.

PEAK STORAGE (AC-FT)	TIME (HR)	MAXIMUM AVERAGE STORAGE 6-HR	24-HR	72-HR	33.32-HR
+ 1.	12.50	1.	1.	0.	0.

PEAK STAGE (FEET)	TIME (HR)	MAXIMUM AVERAGE STAGE 6-HR	24-HR	72-HR	33.32-HR
+ 1470.43	12.52	1470.08	1469.61	1468.60	1468.60

CUMULATIVE AREA = 0.04 SQ MI

*** FDKRUT - NEWTON RAPHSON FAILEDFIXED POINT ITERATION USED - ITERATION= 1

*** FDKRUT - NEWTON RAPHSON FAILEDFIXED POINT ITERATION USED - ITERATION= 1

```
*** *** *** *** *** *** *** *** *** *** *** *** *** *** *** *** *** *** *** *** *** *** *** *** *** *** *** *** *** *** *** ***

          **************
          *            *
177 KK    *     RET2   *
          *            *
          **************

179 KO        OUTPUT CONTROL VARIABLES
                   IPRNT          3  PRINT CONTROL
                   IPLOT          0  PLOT CONTROL
                   QSCAL         0.  HYDROGRAPH PLOT SCALE

            HYDROGRAPH ROUTING DATA

180 RS        STORAGE ROUTING
                   NSTPS          2  NUMBER OF SUBREACHES
                    ITYP       ELEV  TYPE OF INITIAL CONDITION
                  RSVRIC    1464.00  INITIAL CONDITION
                       X       0.00 WORKING R AND D COEFFICIENT

181 SA            AREA        0.2       0.3       0.4       0.4

182 SE        ELEVATION    1464.00   1466.00   1468.00   1470.00

183 SS        SPILLWAY
                    CREL    1468.00  SPILLWAY CREST ELEVATION
                   SPWID      50.00  SPILLWAY WIDTH
                    COSW       3.00  WEIR COEFFICIENT
                    EXPW       1.50  EXPONENT OF HEAD

                                                  ***

                                   COMPUTED STORAGE-ELEVATION DATA

        STORAGE       0.00      0.52      1.24      2.02
      ELEVATION    1464.00   1466.00   1468.00   1470.00

                                   COMPUTED OUTFLOW-ELEVATION DATA

        OUTFLOW       0.00      0.00      0.07      0.58      1.96      4.66      9.09     15.71     24.95     37.25
      ELEVATION    1464.00   1468.00   1468.01   1468.02   1468.06   1468.10   1468.15   1468.22   1468.30   1468.40

        OUTFLOW      53.03     72.75     96.83    125.71    159.83    199.62    245.52    297.97    357.41    424.26
      ELEVATION    1468.50   1468.62   1468.75   1468.89   1469.04   1469.21   1469.39   1469.58   1469.78   1470.00

                                 COMPUTED STORAGE-OUTFLOW-ELEVATION DATA

        STORAGE       0.00      0.52      1.24      1.25      1.27      1.28      1.30      1.33      1.36      1.40
        OUTFLOW       0.00      0.00      0.00      0.58      1.96      4.66      9.09     15.71     24.96     37.24
      ELEVATION    1464.00   1466.00   1468.00   1468.02   1468.06   1468.10   1468.15   1468.22   1468.30   1468.40

        STORAGE       1.44      1.48      1.54      1.59      1.65      1.72      1.79      1.86      1.94      2.02
        OUTFLOW      53.03     72.75     96.83    125.71    159.83    199.61    245.53    297.96    357.40    424.26
      ELEVATION    1468.50   1468.62   1468.75   1468.89   1469.04   1469.21   1469.39   1469.58   1469.78   1470.00

*** WARNING *** MODIFIED PULS ROUTING MAY BE NUMERICALLY UNSTABLE FOR OUTFLOWS BETWEEN      298. TO      424.
```

THE ROUTED HYDROGRAPH SHOULD BE EXAMINED FOR OSCILLATIONS OR OUTFLOWS GREATER THAN PEAK INFLOWS.
THIS CAN BE CORRECTED BY DECREASING THE TIME INTERVAL OR INCREASING STORAGE (USE A LONGER REACH.)

*** *** *** *** ***

HYDROGRAPH AT STATION RET2

PEAK FLOW (CFS)	TIME (HR)		MAXIMUM AVERAGE FLOW 6-HR	24-HR	72-HR	33.32-HR
		(CFS)				
60.	12.50		10.	3.	2.	1.
		(INCHES)	0.911	1.028	1.028	1.028
		(AC-FT)	5.	5.	5.	5.

PEAK STORAGE (AC-FT)	TIME (HR)	MAXIMUM AVERAGE STORAGE 6-HR	24-HR	72-HR	33.32-HR
1.	12.50	1.	1.	0.	0.

PEAK STAGE (FEET)	TIME (HR)	MAXIMUM AVERAGE STAGE 6-HR	24-HR	72-HR	33.32-HR
1463.65	12.50	1456.17	1457.35	1456.57	1456.57

CUMULATIVE AREA = 0.10 SQ MI

RUNOFF SUMMARY
FLOW IN CUBIC FEET PER SECOND
TIME IN HOURS, AREA IN SQUARE MILES

OPERATION	STATION	PEAK FLOW	TIME OF PEAK	AVERAGE FLOW FOR MAXIMUM PERIOD 6-HOUR	24-HOUR	72-HOUR	BASIN AREA	MAXIMUM STAGE	TIME OF MAX STAGE
HYDROGRAPH AT	13	5.	12.50	1.	0.	0.	0.01		
DIVERSION TO	13.2	0.	12.50	0.	0.	0.	0.01		
HYDROGRAPH AT	13.1	5.	12.50	1.	0.	0.	0.01		
ROUTED TO	13.3	8.	12.60	1.	0.	0.	0.01		
HYDROGRAPH AT	13.3	0.	12.50	0.	0.	0.	0.00		
ROUTED TO	13.4	0.	12.50	0.	0.	0.	0.00		
HYDROGRAPH AT	14	21.	12.50	3.	1.	1.	0.01		
2 COMBINED AT	14.1	21.	12.50	3.	1.	1.	0.01		
DIVERSION TO									

	14.2	1.	12.50	0.	0.	0.	0.01	
HYDROGRAPH AT								
	14.1	20.	12.50	3.	1.	1.	0.01	
ROUTED TO								
	14.3	20.	12.58	3.	1.	1.	0.01	
HYDROGRAPH AT								
	15	52.	12.52	9.	2.	2.	0.04	
3 COMBINED AT								
	15.1	80.	12.53	13.	4.	3.	0.06	
HYDROGRAPH AT								
	18	2.	12.47	0.	0.	0.	0.00	
2 COMBINED AT								
	18.1	82.	12.53	14.	4.	3.	0.06	30TH WAY
ROUTED TO								
	18-17	82.	12.55	14.	4.	3.	0.06	PIPE
HYDROGRAPH AT								
	17	15.	12.52	2.	1.	0.	0.01	
DIVERSION TO								
	17.2	8.	12.50	1.	0.	0.	0.01	
HYDROGRAPH AT								
	17.1	8.	12.50	2.	1.	0.	0.01	29TH ST
2 COMBINED AT								
	17.1	90.	12.55	15.	4.	3.	0.07	
ROUTED TO								
	17-20	90.	12.55	15.	4.	3.	0.07	PIPE
HYDROGRAPH AT								
	17.3	8.	12.52	1.	0.	0.	0.00	
HYDROGRAPH AT								
	19	2.	12.47	0.	0.	0.	0.00	
2 COMBINED AT								
	19.1	9.	12.52	1.	0.	0.	0.00	
ROUTED TO								
	19-12D	9.	12.55	1.	0.	0.	0.00	
HYDROGRAPH AT								
	12D	2.	12.48	0.	0.	0.	0.00	
2 COMBINED AT								
	12D.1	11.	12.55	1.	0.	0.	0.00	28TH ST
HYDROGRAPH AT								
	20	5.	12.50	1.	0.	0.	0.00	28TH ST
2 COMBINED AT								
	20.1	16.	12.55	2.	1.	0.	0.00	

HYDROGRAPH AT									
+	1	16.	12.52	3.	1.	1.	0.01		
DIVERSION TO									
+	1.2	16.	12.48	3.	1.	1.	0.01		
HYDROGRAPH AT									
+	1.2	0.	12.48	0.	0.	0.	0.01		
ROUTED TO									
+	1-9	0.	13.13	0.	0.	0.	0.01		
HYDROGRAPH AT									
+	9	43.	12.50	7.	2.	1.	0.03		
2 COMBINED AT									
+	9.1	43.	12.50	7.	2.	1.	0.04		
ROUTED TO									
+	RET1	42.	12.52	6.	2.	1.	0.04		
+								1470.43	12.52
ROUTED TO									
+	9-10	42.	12.53	6.	2.	1.	0.04		
HYDROGRAPH AT									
+	2	38.	12.52	6.	2.	1.	0.03		
HYDROGRAPH AT									
+	1.3	16.	12.52	3.	1.	1.	0.00		
ROUTED TO									
+	1-2	16.	12.53	3.	1.	1.	0.00		
2 COMBINED AT									
+	2.1	54.	12.52	9.	2.	2.	0.03		
DIVERSION TO									
+	2.2	54.	12.52	9.	2.	2.	0.03		
HYDROGRAPH AT									
+	2.1	1.	12.52	0.	0.	0.	0.03		
ROUTED TO									
+	2-10	1.	12.82	0.	0.	0.	0.03		
HYDROGRAPH AT									
+	10	37.	12.52	6.	2.	1.	0.03		
3 COMBINED AT									
+	10.1	80.	12.52	12.	3.	2.	0.10		
ROUTED TO									
+	RET2	80.	12.53	10.	3.	2.	0.10		
+								1468.65	12.53
ROUTED TO									
+	10-11	79.	12.58	10.	3.	2.	0.10		
HYDROGRAPH AT									

	2.2	54.	12.52	9.	2.	2.	0.00
ROUTED TO							
	2-3	54.	12.55	9.	2.	2.	0.00
HYDROGRAPH AT							
	3	58.	12.52	10.	3.	2.	0.04
2 COMBINED AT							
	3.1	111.	12.53	19.	5.	4.	0.04
DIVERSION TO							
	3.2	99.	12.53	17.	5.	3.	0.04
HYDROGRAPH AT							
	3.1	12.	12.53	2.	0.	0.	0.04
ROUTED TO							
	3-11	12.	12.68	2.	0.	0.	0.04
HYDROGRAPH AT							
	14.3	1.	12.50	0.	0.	0.	0.00
HYDROGRAPH AT							
	11	70.	12.52	12.	3.	2.	0.05
4 COMBINED AT							
	11.1	160.	12.55	27.	6.	5.	0.19
ROUTED TO							
	11-12B	160.	12.55	27.	6.	5.	0.19
HYDROGRAPH AT							
	3.3	99.	12.53	17.	5.	3.	0.00
ROUTED TO							
	3-4	99.	12.57	17.	5.	3.	0.00
HYDROGRAPH AT							
	4	97.	12.55	17.	5.	3.	0.08
2 COMBINED AT							
	4.1	196.	12.55	34.	9.	7.	0.08
DIVERSION TO							
	4.2	195.	12.55	34.	9.	7.	0.08
HYDROGRAPH AT							
	4.1	1.	12.55	0.	0.	0.	0.08
ROUTED TO							
	4-12A	1.	12.93	0.	0.	0.	0.08
HYDROGRAPH AT							
	12A	60.	12.52	10.	3.	2.	0.05
2 COMBINED AT							
	12A.1	60.	12.52	10.	3.	2.	0.12
DIVERSION TO							
	12A.2	0.	12.52	0.	0.	0.	0.12

HYDROGRAPH AT							
+	12A.1	60.	12.52	10.	3.	2.	0.12
ROUTED TO							
+	12A-B	60.	12.53	10.	3.	2.	0.12
HYDROGRAPH AT							
	12B	11.	12.52	2.	0.	0.	0.01
3 COMBINED AT							
	12B.1	231.	12.55	35.	10.	7.	0.32
DIVERSION TO							
	12B.2	0.	12.55	0.	0.	0.	0.32
HYDROGRAPH AT							
	12B.1	231.	12.55	35.	10.	7.	0.32
ROUTED TO							
	12B-C	231.	12.55	35.	10.	7.	0.32
HYDROGRAPH AT							
	12C	13.	12.52	2.	1.	0.	0.01
3 COMBINED AT							
	12C.1	244.	12.55	37.	10.	8.	0.33
3 COMBINED AT							
+	20.2	349.	12.55	55.	15.	11.	0.41
ROUTED TO							
+	20-21	349.	12.57	55.	15.	11.	0.41
HYDROGRAPH AT							
+	4.2	195.	12.55	34.	9.	7.	0.00
ROUTED TO							
+	4-5	194.	12.58	34.	9.	7.	0.00
HYDROGRAPH AT							
+	5	225.	12.55	39.	11.	8.	0.17
2 COMBINED AT							
+	5.1	419.	12.57	73.	20.	15.	0.17
DIVERSION TO							
+	5.2	419.	12.55	73.	20.	15.	0.17
HYDROGRAPH AT							
+	5.1	0.	12.55	0.	0.	0.	0.17
HYDROGRAPH AT							
+	12A.3	0.	12.47	0.	0.	0.	0.00
ROUTED TO							
+	12A-16	0.	14.02	0.	0.	0.	0.00
HYDROGRAPH AT							
+	12B.3	0.	12.53	0.	0.	0.	0.00

28TH ST

PIPE

ROUTED TO	12B-16	0.	13.68	0.	0.	0.	0.00	
HYDROGRAPH AT	16	142.	12.53	24.	7.	5.	0.11	
HYDROGRAPH AT	21	14.	12.52	2.	1.	1.	0.01	
5 COMBINED AT	16.1	157.	12.53	27.	7.	5.	0.29	26TH ST
HYDROGRAPH AT	23	3.	12.50	1.	0.	0.	0.00	26TH ST
2 COMBINED AT	21.1	160.	12.53	28.	8.	6.	0.29	
2 COMBINED AT	21.2	509.	12.55	83.	23.	17.	0.70	
ROUTED TO	21-22	509.	12.57	83.	23.	17.	0.70	PIPE
HYDROGRAPH AT	22	17.	12.52	2.	1.	0.	0.01	CAVE CREEK RD
HYDROGRAPH AT	24	3.	12.50	1.	0.	0.	0.00	CAVE CREEK RD
3 COMBINED AT	22.1	525.	12.57	86.	24.	17.	0.71	OUTLET BASIN 3

SUMMARY OF KINEMATIC WAVE - MUSKINGUM-CUNGE ROUTING
(FLOW IS DIRECT RUNOFF WITHOUT BASE FLOW)

ISTAQ	ELEMENT	DT (MIN)	PEAK (CFS)	TIME TO PEAK (MIN)	VOLUME (IN)	INTERPOLATED TO COMPUTATION INTERVAL DT (MIN)	PEAK (CFS)	TIME TO PEAK (MIN)	VOLUME (IN)
13.3	MANE	1.00	8.05	755.35	2.26	1.00	8.05	756.00	2.26

CONTINUITY SUMMARY (AC-FT) - INFLOW=0.7215E+00 EXCESS=0.0000E+00 OUTFLOW=0.7222E+00 BASIN STORAGE=0.1159E-03 PERCENT ERROR= -0.1

13.4	MANE	1.00	0.24	769.19	-1.00	1.00	0.24	769.00	-1.00
14.3	MANE	1.00	20.37	754.47	2.28	1.00	20.35	755.00	2.28

CONTINUITY SUMMARY (AC-FT) - INFLOW=0.1824E+01 EXCESS=0.0000E+00 OUTFLOW=0.1827E+01 BASIN STORAGE=0.2856E-03 PERCENT ERROR= -0.2

18-17	MANE	0.61	82.11	752.98	2.33	1.00	82.11	753.00	2.33

```
** HEC-1 ERROR 1 *** INVALID CARD IDENTIFICATION CODE OR CARD OUT OF SEQUENCE
   CARD NO.    1

   IT          HYDROGRAPH TIME DATA
                     NMIN          1  MINUTES IN COMPUTATION INTERVAL
                    IDATE     12JU93  STARTING DATE
                    ITIME       0715  STARTING TIME
                       NQ       2000  NUMBER OF HYDROGRAPH ORDINATES
                   NDDATE     2   93  ENDING DATE
                   NDTIME       1634  ENDING TIME
                    ICENT         19  CENTURY MARK

                COMPUTATION INTERVAL    0.02 HOURS
                     TOTAL TIME BASE   33.32 HOURS

        ENGLISH UNITS
            DRAINAGE AREA          SQUARE MILES
            PRECIPITATION DEPTH    INCHES
            LENGTH, ELEVATION      FEET
            FLOW                   CUBIC FEET PER SECOND
            STORAGE VOLUME         ACRE-FEET
            SURFACE AREA           ACRES
            TEMPERATURE            DEGREES FAHRENHEIT

** HEC-1 ERROR 1 *** INVALID CARD IDENTIFICATION CODE OR CARD OUT OF SEQUENCE
   CARD NO.    2

** HEC-1 ERROR 1 *** INVALID CARD IDENTIFICATION CODE OR CARD OUT OF SEQUENCE
   CARD NO.    3

            SUBBASIN RUNOFF DATA

   0 BA         SUBBASIN CHARACTERISTICS
                     TAREA        0.00  SUBBASIN AREA

                PRECIPITATION DATA

   0 PB              STORM        0.00  BASIN TOTAL PRECIPITATION

   0 PI           INCREMENTAL PRECIPITATION PATTERN


   0 UI         INPUT UNITGRAPH,   0 ORDINATES,  VOLUME = 0.00


                                                          ***
```

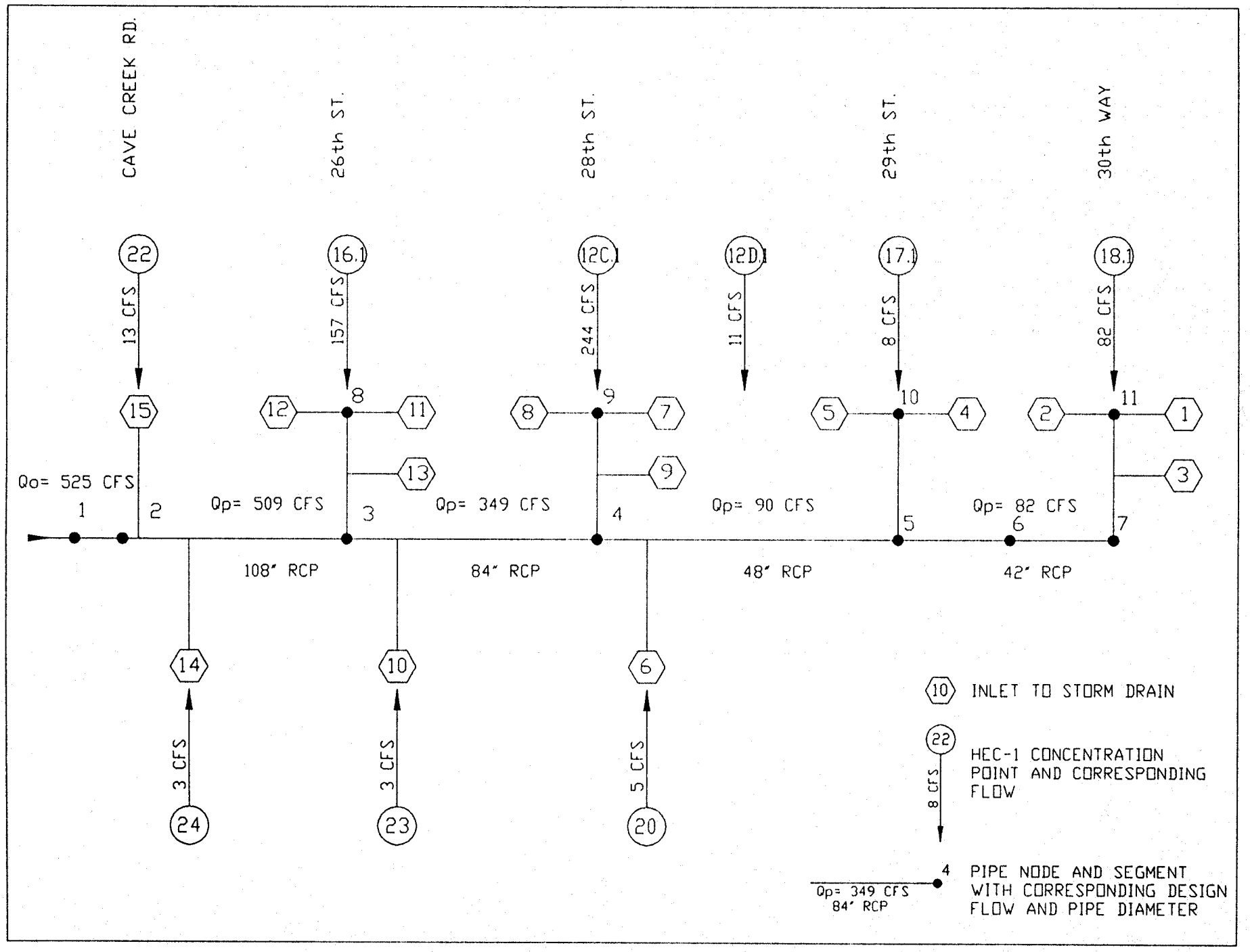
CAVE CREEK RD.
26th ST.
28th ST.
29th ST.
30th WAY
22
13 CFS
16.1
157 CFS
12C.1
244 CFS
12D.1
11 CFS
17.1
8 CFS
18.1
82 CFS
15
12
11
8
7
13
9
5
4
10
2
1
3
11
Qo= 525 CFS
1
2
Qp= 509 CFS
3
Qp= 349 CFS
4
Qp= 90 CFS
5
Qp= 82 CFS
6
7
108" RCP
84" RCP
48" RCP
42" RCP
14
10
6
3 CFS
3 CFS
5 CFS
24
23
20
10 INLET TO STORM DRAIN
22
8 CFS
HEC-1 CONCENTRATION POINT AND CORRESPONDING FLOW
4
Qp= 349 CFS
84" RCP
PIPE NODE AND SEGMENT WITH CORRESPONDING DESIGN FLOW AND PIPE DIAMETER

F. ADDITIONAL HYDRAULIC ANALYSIS

Morrison Maierle/CSSA INC.
ENGINEERS PLANNERS SURVEYORS
4621 North 16th Street • Suite D-401 • Phoenix, Arizona 85016 • 602/277-2828

PROJECT GRIVERS AVE STORM DRAIN LATERAL
PROJECT NO. RECT. WING BASIN SHEET 1 OF
CALCULATED BY H 1"=10 (0.1) DATE
CHECKED BY DATE

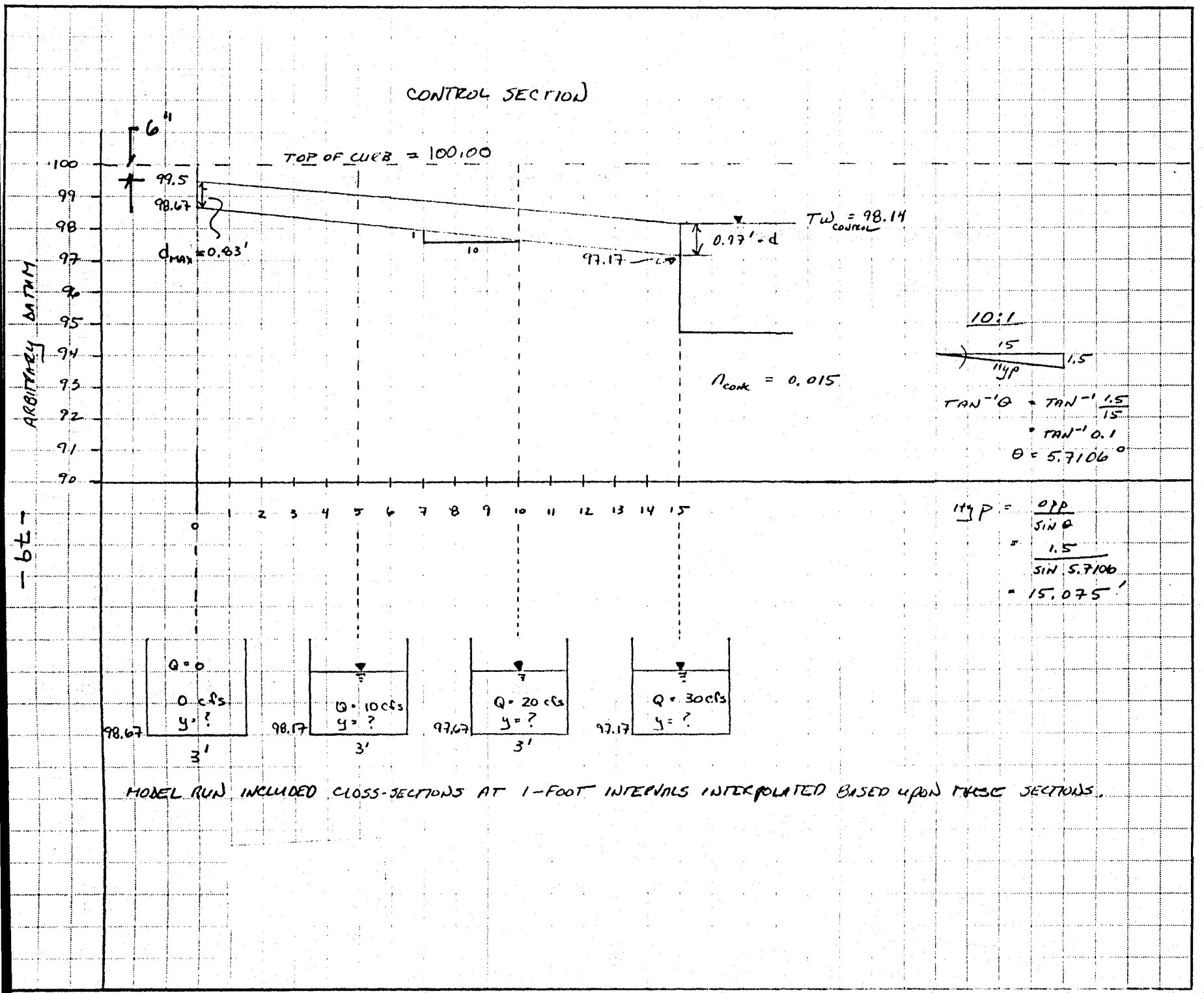

MODEL RUN INCLUDED CROSS-SECTIONS AT 1-FOOT INTERVALS INTERPOLATED BASED UPON THESE SECTIONS.

```
WATER SURFACE PROFILES
VERSION OF SEPTEMBER 1988
ERROR: 01,02,03,04
UPDATED:  JUNE 1990
RUN DATE     2/ 9/94      TIME   15:21:42
```

```
U.S. ARMY CORPS OF ENGINEERS
THE HYDROLOGIC ENGINEERING CENTER
609 SECOND STREET, SUITE D
DAVIS, CALIFORNIA 95616-4687
```

Subcritical Flow Condition

```
X     X  XXXXXXX   XXXXX              XXXXX
X     X  X        X     X            X     X
X     X  X        X                        X
XXXXXXX  XXXX     X          XXXXX    XXXXX
X     X  X        X                  X
X     X  X        X     X            X
X     X  XXXXXXX   XXXXX             XXXXXXX
```

```
:::::::::::::::::::::::::::::::::::::::::::::
:::::::::::::::::::::::::::::::::::::::::::::
:::                                       :::
:::   FULL MICRO-COMPUTER IMPLEMENTATION   :::
:::                                       :::
:::::::::::::::::::::::::::::::::::::::::::::
:::::::::::::::::::::::::::::::::::::::::::::
```

```
============================
H A E S T A D   M E T H O D S
============================
```

37 Brookside Road Waterbury, Connecticut 06708 (203) 755-1666

END OF BANNER

```
     Grovers Avenue Storm Drain Lateral                                  T1
     28th St. - Catch Basin Type 'M'                                     T2
T3   Wing Basin - Weir Inlet Control Analysis                            T3
T4   Flood Control District of Maricopa County                           T4
     Qtotal = 30 cfs; Wing Slope = 10:1, WB Length = 15 ft; Width = 3 ft  T5
T6   Morrison-Maierle/CSSA      Phoenix, AZ                             T6
                                                                         BLANK_LINE
                                                                         BLANK_LINE
                                                                         BLANK_LINE
*    Job Cards - Specify Initial Conditions and Program Options          *
 ICHECK    ING    NINV    IDIR    STRT   METRIC  HVINS      Q   WSEL      FQ*
     0      2       0       0       0       0     0.5       0  98.140     001
                                                                         BLANK_LINE
                                                                         BLANK_LINE
    Multiple Profile Cards                                               *
*  NPROF   IPLOT   PRFVS   XSECV  XSECH      FN   ALLOC     IBW   CHNIM ITRACE*
J2   -1      1       0       0       0       0    -1        0       0     002
                                                                         BLANK_LINE
                                                                         BLANK_LINE
*    Variable Codes for Summary Printout                                 *
 SECNO     Q    CWSEL   TOPWID    QCH    QLOB    QROB     VCH   DEPTH DIFWSI*
   32     47       1       4      14      17      15      26       8     5100
*  CHSLOP  CRIWS    AREA   STCHL   ELBEL   STCHR   RBEL                   *
J3   33      2      25      21      23      22      24                     J3
                                                                         BLANK_LINE
                                                                         BLANK_LINE
*    Printout Control Option                                             *
 LPRINT  NUMSEC                                                          *
  -10     -10                                                            J5
                                                                         BLANK_LINE
                                                                         BLANK_LINE
*Begin Detailed Cross Section Input                                      *
* Data is presented from LOB to ROB (facing downstream)                  *
* Data is presented with most downstream Secno first (supercritical regime)*
                                                                         BLANK_LINE
                                                                         BLANK_LINE
                                                                         BLANK_LINE
 0.015   0.015   0.015       0       0                                   NC
     1      30                                                           QT
X1   15       4       0    3.02       0       0       0       0       0  0X1
GR  105       0   97.17    0.01   97.17    3.01     105    3.02          GR
                                                                         BLANK_LINE
QT   1      28                                                           QT
X1   14       4       0    3.02       1       1       1       0       0  0X1
GR  105       0   97.27    0.01   97.27    3.01     105    3.02          GR
                                                                         BLANK_LINE
QT   1      26                                                           QT
X1   13       4       0    3.02       1       1       1       0       0  0X1
GR  105       0   97.37    0.01   97.37    3.01     105    3.02          GR
                                                                         BLANK_LINE
QT   1      24                                                           QT
X1   12       4       0    3.02       1       1       1       0       0  0X1
GR  105       0   97.47    0.01   97.47    3.01     105    3.02          GR
                                                                         BLANK_LINE
QT   1      22                                                           QT
X1   11       4       0    3.02       1       1       1       0       0  0X1
GR  105       0   97.57    0.01   97.57    3.01     105    3.02          GR
                                                                         BLANK_LINE
QT   1      20                                                           QT
X1   10       4       0    3.02       1       1       1       0       0  0X1
GR  105       0   97.67    0.01   97.67    3.01     105    3.02          GR
```

										BLANK_LINE
	1	15								QT
X1	5	4	0	3.02	1	1	1	0	0	0X1
GR	105	0	97.77	0.01	97.77	3.01	105	3.02		GR
										BLANK_LINE
QT	1	16								QT
X1	8	4	0	3.02	1	1	1	0	0	0X1
	105	0	97.87	0.01	97.87	3.01	105	3.02		GR
										BLANK_LINE
QT	1	14								QT
	7	4	0	3.02	1	1	1	0	0	0X1
	105	0	97.97	0.01	97.97	3.01	105	3.02		GR
										BLANK_LINE
[illegible]	1	12								QT
	6	4	0	3.02	1	1	1	0	0	0X1
GR	105	0	98.07	0.01	98.07	3.01	105	3.02		GR
										BLANK_LINE
[illegible]	1	10								QT
[illegible]	5	4	0	3.02	1	1	1	0	0	0X1
GR	105	0	98.17	0.01	98.17	3.01	105	3.02		GR
										BLANK_LINE
[illegible]	1	8								QT
X1	4	4	0	3.02	1	1	1	0	0	0X1
[illegible]	105	0	98.27	0.01	98.27	3.01	105	3.02		GR
										BLANK_LINE
[illegible]	1	6								QT
X1	3	4	0	3.02	1	1	1	0	0	0X1
	105	0	98.37	0.01	98.37	3.01	105	3.02		GR
										BLANK_LINE
QT	1	4								QT
	2	4	0	3.02	1	1	1	0	0	0X1
	105	0	98.47	0.01	98.47	3.01	105	3.02		GR
										BLANK_LINE
QT	1	2								QT
	1	4	0	3.02	1	1	1	0	0	0X1
GR	105	0	98.57	0.01	98.57	3.01	105	3.02		GR
										BLANK_LINE
	1	.001								QT
	0	4	0	3.02	1	1	1	0	0	0X1
GR	105	0	98.67	0.01	98.67	3.01	105	3.02		GR
										EJ
										ER

THIS RUN EXECUTED 2/ 9/94 15:21:42

```
**********************************************
HEC2 RELEASE DATED SEP 88 UPDATED JUN  1990

ERROR CORR - 01,02,03,04
 MODIFICATION -
**********************************************

T1      Grovers Avenue Storm Drain Lateral
        29th St. - Catch Basin Type M
        Wing Basin - Weir Inlet Control Analysis
T4      Flood Control District of Maricopa County
        Qtotal = 30 cfs; Wing Slope = 10:1, WB Length = 15 ft; Width = 3 ft
        Morrison-Maierle/CSSA      Phoenix, AZ


     Job Cards - Specify Initial Conditions and Program Options
  ICHECK    IN2    NINV    IDIR    STRT   METRIC  HVINS      2   WSEL      FQ

  ICHECK    IN2    NINV    IDIR    STRT   METRIC   HVINS     2    WSEL     FQ

     0       1       0       1       0       0      0.5      1   98.140     0


    Multiple Profile Cards
  NPROF   IPLOT   PRFVS  XSECV  XSECH    FN    ALLDC   IBW  CHNIM ITRACE

J2 NPROF   IPLOT   PRFVS   XSECV   XSECH   FN    ALLDC   IBW   CHNIM   ITRACE

  -1       1       0       0       0       0     -1      0     0       0


    Variable Codes for Summary Printout
  SECND    Q    DWSEL   TOPWID   QCH    QLOB   QROB   VCH   DEPTH DIFWSX

J3 VARIABLE CODES FOR SUMMARY PRINTOUT

  38      43       1       4      14      13      15      26      9      31
  CHSLOP  CRIWS   AREA   STCHL   XLBEL   STCHR   RBEL
  33       2      25      21      23      22      24


    Printout Control Option
  LPRINT  NUMSEC

J5 LPRNT   NUMSEC                  ********REQUESTED SECTION NUMBERS********

  -10      -10


Begin Detailed Cross Section Input
```

Data is presented from LOB to ROB (facing downstream)
Data is presented with most downstream Secno first (subcritical regime)

	0.015	0.015	0.015	0	0					
	1	30								
41	15	4	0	3.02	0	0	0	0	0	0
55	105	0	97.17	0.01	97.17	3.01	105	3.02		
	1	29								
	14	4	0	3.02	1	1	1	0	0	0
55	105	0	97.27	0.01	97.27	3.01	105	3.02		
	1	26								
41	12	4	0	3.02	1	1	1	0	0	0
55	105	0	97.37	0.01	97.37	3.01	105	3.02		
	1	24								
	12	4	0	3.02	1	1	1	0	0	0
55	105	0	97.47	0.01	97.47	3.01	105	3.02		
	1	22								
41	11	4	0	3.02	1	1	1	0	0	0
55	105	0	97.57	0.01	97.57	3.01	105	3.02		
	1	20								
	10	4	0	3.02	1	1	1	0	0	0
55	105	0	97.67	0.01	97.67	3.01	105	3.02		
	1	18								
41	9	4	0	3.02	1	1	1	0	0	0
55	105	0	97.77	0.01	97.77	3.01	105	3.02		
	1	16								
	8	4	0	3.02	1	1	1	0	0	0
55	105	0	97.87	0.01	97.87	3.01	105	3.02		
	1	14								
41	7	4	0	3.02	1	1	1	0	0	0
55	105	0	97.97	0.01	97.97	3.01	105	3.02		

BI	1	12								
XI	6	4	0	3.02	1	1	1	0	0	0
	105	0	98.07	0.01	98.07	3.01	105	3.02		
	1	10								
	5	4	0	3.02	1	1	1	0	0	0
BR	105	0	98.17	0.01	98.17	3.01	105	3.02		
BI	1	8								
XI	4	4	0	3.02	1	1	1	0	0	0
	105	0	98.27	0.01	98.27	3.01	105	3.02		
	1	6								
	7	4	0	3.02	1	1	1	0	0	0
BR	105	0	98.37	0.01	98.37	3.01	105	3.02		
BI	1	4								
XI	2	4	0	3.02	1	1	1	0	0	0
	105	0	98.47	0.01	98.47	3.01	105	3.02		
	1	2								
	1	4	0	3.02	1	1	1	0	0	0
BR	105	0	98.57	0.01	98.57	3.01	105	3.02		
BI	1	.001								
XI	3	4	0	3.02	1	1	1	0	0	0
	105	0	98.67	0.01	98.67	3.01	105	3.02		

THIS RUN EXECUTED 2/ 9/94 15:21:45

****
HEC2 RELEASE DATED SEP 88 UPDATED JUN 1990

ERROR CORR - 01,02,03,04
MODIFICATION -
****

NOTE- ASTERISK (*) AT LEFT OF CROSS-SECTION NUMBER INDICATES MESSAGE IN SUMMARY OF ERRORS LIST

Wing Basin - Weir Inlet

SUMMARY PRINTOUT

	SECNO	Q	WSEL	TOPWID	QCH	QLOB	QROB	VCH	DEPTH	DIFWSX	CHCHSL	CRIWS	AREA
*	15.000	30.00	98.53	3.00	30.00	.00	.00	6.85	1.46	.06	.00	98.57	4.38
	14.000	28.00	98.77	3.00	28.00	.00	.00	6.40	1.46	.10	100.00	98.68	4.38
	13.000	26.00	98.82	3.00	26.00	.00	.00	5.94	1.45	.09	100.01	98.69	4.38
	12.000	24.00	98.87	3.00	24.00	.00	.00	5.71	1.40	.05	100.00	98.72	4.21
	11.000	22.00	98.92	3.00	22.00	.00	.00	5.39	1.36	.06	100.00	98.76	4.08
	10.000	20.00	98.99	3.00	20.00	.00	.00	5.05	1.32	.06	100.00	98.78	3.96
	9.000	18.00	99.05	3.00	18.00	.00	.00	4.70	1.28	.06	100.00	98.80	3.83
	8.000	16.00	99.10	3.00	16.00	.00	.00	4.33	1.23	.06	100.01	98.83	3.70
	7.000	14.00	99.15	3.00	14.00	.00	.00	3.94	1.18	.05	100.00	98.85	3.56
	6.000	12.00	99.20	3.00	12.00	.00	.00	3.52	1.13	.05	100.00	98.86	3.41
	5.000	10.00	99.25	3.00	10.00	.00	.00	3.08	1.08	.05	100.00	98.87	3.25
	4.000	8.00	99.30	3.00	8.00	.00	.00	2.60	1.03	.04	100.00	98.87	3.08
	3.000	6.00	99.34	3.00	6.00	.00	.00	2.07	.97	.04	100.01	98.87	2.90
	2.000	4.00	99.37	3.00	4.00	.00	.00	1.48	.90	.03	100.00	98.85	2.70
	1.000	2.00	99.39	3.00	2.00	.00	.00	.81	.82	.02	100.00	98.81	2.47
	.000	.00	99.40	3.00	.00	.00	.00	.00	.73	.01	100.00	98.67	2.20

ng Basin - Weir Inlet

SUMMARY PRINTOUT

STCHL	XLBEL	STCHR	RBEL
.000	105.00	3.02	105.00
.000	105.00	3.02	105.00
.000	105.00	3.02	105.00
.000	105.00	3.02	105.00
.000	105.00	3.02	105.00
.000	105.00	3.02	105.00
.000	105.00	3.02	105.00
.000	105.00	3.02	105.00
.000	105.00	3.02	105.00
.000	105.00	3.02	105.00
.000	105.00	3.02	105.00
.000	105.00	3.02	105.00
.000	105.00	3.02	105.00
.000	105.00	3.02	105.00
.000	105.00	3.02	105.00
.000	105.00	3.02	105.00

SUMMARY OF ERRORS AND SPECIAL NOTES

CAUTION SECNO= 15.000 PROFILE= 1 CRITICAL DEPTH ASSUMED

rmal program termination

PROFILE FOR STREAM Wing Basin - Weir Inlet

PLOTTED POINTS (BY PRIORITY) E-ENERGY,W-WATER SURFACE,I-INVERT,C-CRITICAL W.S.,L-LEFT BANK,R-RIGHT BANK,M-LOWER END STA

```
ELEVATION   97.      98.      99.      100.     101.     102.     103.     104.     105.     106.
  SECND   CUMDIS

  15.00    0. I        .  W    . E      .        .        .        .        .      L .        .        .
           0. I        .  W    . E      .        .        .        .        .      L .        .        .
           0. I        .  W    . E      .        .        .        .        .      L .        .        .
           0. I        .  W    . E      .        .        .        .        .      L .        .        .
           0. I        .  W    . E      .        .        .        .        .      L .        .        .
           1. I        .  W    . E      .        .        .        .        .      L .        .        .
           1. .I       .  W    . E      .        .        .        .        .      L .        .        .
           1. .I       .  W    . E      .        .        .        .        .      L .        .        .
           1. .I       .  W    . E      .        .        .        .        .      L .        .        .
           1. .I       .  CW   . E      .        .        .        .        .      L .        .        .
  14.00    1. .I       .  CW   . E      .        .        .        .        .      L .        .        .
           1. .I       .  CW   . E      .        .        .        .        .      L .        .        .
           1. .I       .  CW   . E      .        .        .        .        .      L .        .        .
           1. .I       .  CW   . E      .        .        .        .        .      L .        .        .
           1. .I       .  CW   . E      .        .        .        .        .      L .        .        .
           2. . I      .  CW   . E      .        .        .        .        .      L .        .        .
           2. . I      .  CW   . E      .        .        .        .        .      L .        .        .
           2. . I      .  CW   . E      .        .        .        .        .      L .        .        .
           2. . I      .  CW   . E      .        .        .        .        .      L .        .        .
           2. . I      .  C W  . E      .        .        .        .        .      L .        .        .
  13.00    2. . I      .  C W  . E      .        .        .        .        .      L .        .        .
           2. . I      .  C W  . E      .        .        .        .        .      L .        .        .
           2. . I      .  C W  . E      .        .        .        .        .      L .        .        .
           2. . I      .  C W  . E      .        .        .        .        .      L .        .        .
           2. . I      .  C W  . E      .        .        .        .        .      L .        .        .
           2. .  I     .  C W  . E      .        .        .        .        .      L .        .        .
           3. .  I     .  C W  . E      .        .        .        .        .      L .        .        .
           3. .  I     .  C W  . E      .        .        .        .        .      L .        .        .
           3. .  I     .  C W  . E      .        .        .        .        .      L .        .        .
           3. .  I     .  C W  . E      .        .        .        .        .      L .        .        .
           3. .  I     .   CW  . E      .        .        .        .        .      L .        .        .
  12.00    3. .  I     .   CW  . E      .        .        .        .        .      L .        .        .
           3. .  I     .   CW  . E      .        .        .        .        .      L .        .        .
           3. .  I     .   CW  . E      .        .        .        .        .      L .        .        .
           3. .  I     .   CW  . E      .        .        .        .        .      L .        .        .
           3. .  I     .   CW  . E      .        .        .        .        .      L .        .        .
           4. .   I    .   CW  . E      .        .        .        .        .      L .        .        .
           4. .   I    .   CW  . E      .        .        .        .        .      L .        .        .
           4. .   I    .   CW  . E      .        .        .        .        .      L .        .        .
           4. .   I    .   CW  . E      .        .        .        .        .      L .        .        .
           4. .   I    .   C W . E      .        .        .        .        .      L .        .        .
  11.00    4. .   I    .   C W . E      .        .        .        .        .      L .        .        .
           4. .   I    .   C W . E      .        .        .        .        .      L .        .        .
           4. .   I    .   C W . E      .        .        .        .        .      L .        .        .
           4. .   I    .   C W . E      .        .        .        .        .      L .        .        .
           4. .   I    .   C W . E      .        .        .        .        .      L .        .        .
           5. .    I   .   C W . E      .        .        .        .        .      L .        .        .
           5. .    I   .   C W . E      .        .        .        .        .      L .        .        .
           5. .    I   .   C W . E      .        .        .        .        .      L .        .        .
```

```
        5. .  I   .   C W . E   .   .   .   .   .   L .   .   .
        5. .  I   .   C W . E   .   .   .   .   .   L .   .   .
10.00   5. .  I   .   C W . E   .   .   .   .   .   L .   .   .
        5. .  I   .   C W . E   .   .   .   .   .   L .   .   .
        5. .  I   .   C W . E   .   .   .   .   .   L .   .   .
        5. .  I   .   C W . E   .   .   .   .   .   L .   .   .
        5. .  I   .   C W . E   .   .   .   .   .   L .   .   .
        6. .  I   .   C  W. E   .   .   .   .   .   L .   .   .
        6. .   I  .   C  W. E   .   .   .   .   .   L .   .   .
        6. .   I  .   C  W. E   .   .   .   .   .   L .   .   .
        6. .   I  .   C  W. E   .   .   .   .   .   L .   .   .
        6. .   I  .   C  W. E   .   .   .   .   .   L .   .   .
9.00    6. .   I  .   C  W. E   .   .   .   .   .   L .   .   .
        6. .   I  .   C  W. E   .   .   .   .   .   L .   .   .
        6. .   I  .   C  W. E   .   .   .   .   .   L .   .   .
        6. .   I  .   C  W. E   .   .   .   .   .   L .   .   .
        6. .   I  .   C  W. E   .   .   .   .   .   L .   .   .
        7. .    I .   C  W. E   .   .   .   .   .   L .   .   .
        7. .    I .   C  W. E   .   .   .   .   .   L .   .   .
        7. .    I .    C W. E   .   .   .   .   .   L .   .   .
        7. .    I .    C W. E   .   .   .   .   .   L .   .   .
        7. .    I .    C W. E   .   .   .   .   .   L .   .   .
8.00    7. .    I .    C W. E   .   .   .   .   .   L .   .   .
        7. .    I .    C W. E   .   .   .   .   .   L .   .   .
        7. .    I .    C W. E   .   .   .   .   .   L .   .   .
        7. .    I .    C W. E   .   .   .   .   .   L .   .   .
        7. .    I .    C  W E   .   .   .   .   .   L .   .   .
        8. .     I .   C  W E   .   .   .   .   .   L .   .   .
        8. .     I .   C  W E   .   .   .   .   .   L .   .   .
        8. .     I .   C  W E   .   .   .   .   .   L .   .   .
        8. .     I .   C  W E   .   .   .   .   .   L .   .   .
        8. .     I .   C  W E   .   .   .   .   .   L .   .   .
7.00    8. .     I .   C  W E   .   .   .   .   .   L .   .   .
        8. .     I .   C  W E   .   .   .   .   .   L .   .   .
        8. .     I .   C  W E   .   .   .   .   .   L .   .   .
        8. .     I .   C  W E   .   .   .   .   .   L .   .   .
        8. .     I .   C  W E   .   .   .   .   .   L .   .   .
        9. .      I.   C  W E   .   .   .   .   .   L .   .   .
        9. .      I.   C  W E   .   .   .   .   .   L .   .   .
        9. .      I.   C  W E   .   .   .   .   .   L .   .   .
        9. .      I.   C  W E   .   .   .   .   .   L .   .   .
        9. .      I.   C  W E   .   .   .   .   .   L .   .   .
6.00    9. .      I.   C  W E   .   .   .   .   .   L .   .   .
        9. .      I.   C  W E   .   .   .   .   .   L .   .   .
        9. .      I.   C  W E   .   .   .   .   .   L .   .   .
        9. .      I.   C  .WE   .   .   .   .   .   L .   .   .
       10. .      I.   C  .WE   .   .   .   .   .   L .   .   .
       10. .       I   C  .WE   .   .   .   .   .   L .   .   .
       10. .       I   C  .WE   .   .   .   .   .   L .   .   .
       10. .       I   C  .WE   .   .   .   .   .   L .   .   .
       10. .       I   C  .WE   .   .   .   .   .   L .   .   .
5.00   10. .       I   C  .WE   .   .   .   .   .   L .   .   .
       10. .       I   C  .WE   .   .   .   .   .   L .   .   .
       10. .       I   C  .WE   .   .   .   .   .   L .   .   .
       10. .       I   C  .WE   .   .   .   .   .   L .   .   .
       10. .       I   C  .WE   .   .   .   .   .   L .   .   .
       11. .       I   C  .WE   .   .   .   .   .   L .   .   .
       11. .      .I   C  .WE   .   .   .   .   .   L .   .   .
       11. .      .I   C  .WE   .   .   .   .   .   L .   .   .
       11. .      .I   C  .WE   .   .   .   .   .   L .   .   .
       11. .      .I   C  .WE   .   .   .   .   .   L .   .   .
```

```
4.00  11. .      .I    C .WE     .      .      .      .      .  L .      .      .
      11. .      .I    C .WE     .      .      .      .      .  L .      .      .
      11. .      .I    C .WE     .      .      .      .      .  L .      .      .
      11. .      .I    C .WE     .      .      .      .      .  L .      .      .
      11. .      .I    C .WE     .      .      .      .      .  L .      .      .
      12. .      . I   C . E     .      .      .      .      .  L .      .      .
      12. .      . I   C . E     .      .      .      .      .  L .      .      .
      12. .      . I   C . E     .      .      .      .      .  L .      .      .
      12. .      . I   C . E     .      .      .      .      .  L .      .      .
      12. .      . I   C . E     .      .      .      .      .  L .      .      .
3.00  12. .      . I   C . E     .      .      .      .      .  L .      .      .
      12. .      . I   C . E     .      .      .      .      .  L .      .      .
      12. .      . I   C . E     .      .      .      .      .  L .      .      .
      12. .      . I   C . E     .      .      .      .      .  L .      .      .
      12. .      . I   C . E     .      .      .      .      .  L .      .      .
      13. .      .  I  C . E     .      .      .      .      .  L .      .      .
      13. .      .  I  C . E     .      .      .      .      .  L .      .      .
      13. .      .  I  C . E     .      .      .      .      .  L .      .      .
      13. .      .  I  C . E     .      .      .      .      .  L .      .      .
      13. .      .  I  C . E     .      .      .      .      .  L .      .      .
2.00  13. .      .  I  C . E     .      .      .      .      .  L .      .      .
      13. .      .  I  C . E     .      .      .      .      .  L .      .      .
      13. .      .  I  C . E     .      .      .      .      .  L .      .      .
      13. .      .  I  C . E     .      .      .      .      .  L .      .      .
      13. .      .  I  C . E     .      .      .      .      .  L .      .      .
      14. .      .   I C . E     .      .      .      .      .  L .      .      .
      14. .      .   I C . E     .      .      .      .      .  L .      .      .
      14. .      .   I C . E     .      .      .      .      .  L .      .      .
      14. .      .   I C   . E   .      .      .      .      .  L .      .      .
      14. .      .   I C   . E   .      .      .      .      .  L .      .      .
1.00  14. .      .   I C   . E   .      .      .      .      .  L .      .      .
      14. .      .   I C   . E   .      .      .      .      .  L .      .      .
      14. .      .   I C   . E   .      .      .      .      .  L .      .      .
      14. .      .   I C   . E   .      .      .      .      .  L .      .      .
      14. .      .   I C   . E   .      .      .      .      .  L .      .      .
      15. .      .    IC   . E   .      .      .      .      .  L .      .      .
      15. .      .    IC   . E   .      .      .      .      .  L .      .      .
      15. .      .    I    . E   .      .      .      .      .  L .      .      .
      15. .      .    I    . E   .      .      .      .      .  L .      .      .
      15. .      .    I    . E   .      .      .      .      .  L .      .      .
 .00  15. .      .    I    . E   .      .      .      .      .  L .      .      .
```

```
WATER SURFACE PROFILES
VERSION OF SEPTEMBER 1988
ERROR: 01,02,03,04
UPDATED:  JUNE 1990
RUN DATE     2/ 9/94      TIME   15:52:01
```

```
U.S. ARMY CORPS OF ENGINEERS
THE HYDROLOGIC ENGINEERING CENTER
609 SECOND STREET, SUITE D
DAVIS, CALIFORNIA 95616-4687
```

Super Critical Flow Condition

```
X     X  XXXXXXX   XXXXX              XXXXX
X     X  X        X     X            X     X
X     X  X        X                  X     X
XXXXXXX  XXXX     X          XXXXX   XXXXX
X     X  X        X                  X
X     X  X        X     X            X
X     X  XXXXXXX   XXXXX              XXXXXXX
```

```
::::::::::::::::::::::::::::::::::::::::::::
::::::::::::::::::::::::::::::::::::::::::::
:::                                      :::
:::   FULL MICRO-COMPUTER IMPLEMENTATION  :::
:::                                      :::
::::::::::::::::::::::::::::::::::::::::::::
::::::::::::::::::::::::::::::::::::::::::::
```

```
============================
H A E S T A D   M E T H O D S
============================
```

37 Brookside Road * Waterbury, Connecticut 06708 * (203) 755-1666

END OF BANNER

```
T1      Grovers Avenue Storm Drain Lateral                                T1
T2      28th St. - Catch Basin Type 'M'                                   T2
T3      Wing Basin - Weir Inlet Control Analysis                          T3
T4      Flood Control District of Maricopa County                         T4
T5      Qtotal = 30 cfs; Wing Slope = 10:1, WB Length = 15 ft; Width = 3 ft  T5
T6      Morrison-Maierle/CSSA      Phoenix, AZ                            T6
                                                                          BLANK_LINE
                                                                          BLANK_LINE
                                                                          BLANK_LINE
*       Job Cards - Specify Initial Conditions and Program Options        *
  ICHECK     INQ    NINV    IDIR    STRT   METRIC  HVINS      Q   WSEL      FQ*
     0       2       0       1       0       0     0.5       0  98.700     001
                                                                          BLANK_LINE
                                                                          BLANK_LINE
    Multiple Profile Cards                                                *
*  NPROF   IPLOT   PRFVS   XSECV   XSECH      FN    ALLDC     IBW   CHNIM ITRACE*
IT   -1       1       0       0       0       0      -1       0       0     002
                                                                          BLANK_LINE
                                                                          BLANK_LINE
*     Variable Codes for Summary Printout                                 *
  SECNO       Q    CWSEL   TOPWID     QCH    QLOB    QROB     VCH   DEPTH DIFWS(*
     38      42       1       4      14      13      15      26       8     5103
*  CHSLOP  CRIWS    AREA   STCHL   XLSEL   STCHR    RSEL                    *
     33       2      25      21      23      22      24                     IT
                                                                          BLANK_LINE
                                                                          BLANK_LINE
*     Printout Control Option                                             *
  LPRINT  NUMSEC                                                          *
 -10     -10                                                              05
                                                                          BLANK_LINE
                                                                          BLANK_LINE
*Begin Detailed Cross Section Input                                       *
* Data is presented from LOB to ROB (facing downstream)                   *
* Data is presented with most upstream Secno first (supercritical regime) *
                                                                          BLANK_LINE
                                                                          BLANK_LINE
                                                                          BLANK_LINE
 0.015   0.015   0.015       0       0                                    NC
     1     0.1                                                            QT
X1   0       4       0    3.02       1       1       1       0       0     0X1
   105       0   98.57    0.01   98.57    3.01     105    3.02             GR
                                                                          BLANK_LINE
QT   1       2                                                            QT
     1       4       0    3.02       1       1       1       0       0     0X1
   105       0   98.57    0.01   98.57    3.01     105    3.02             GR
                                                                          BLANK_LINE
QT   1       4                                                            QT
     2       4       0    3.02       1       1       1       0       0     0X1
GR 105       0   98.47    0.01   98.47    3.01     105    3.02             GR
                                                                          BLANK_LINE
     1       6                                                            QT
     3       4       0    3.02       1       1       1       0       0     0X1
GR 105       0   98.37    0.01   98.37    3.01     105    3.02             GR
                                                                          BLANK_LINE
     1       8                                                            QT
X1   4       4       0    3.02       1       1       1       0       0     0X1
GR 105       0   98.27    0.01   98.27    3.01     105    3.02             GR
                                                                          BLANK_LINE
QT   1      10                                                            QT
X1   5       4       0    3.02       1       1       1       0       0     0X1
   105       0   98.17    0.01   98.17    3.01     105    3.02             GR
```

```
                                                                    BLANK_LINE
     1     12                                                        QT
X1   6      4      0    3.02      1      1      1      0      0      0X1
   105      0  98.07    0.01  98.07   3.01    105   3.02             GR
                                                                    BLANK_LINE
QT   1     14                                                        QT
X1   7      4      0    3.02      1      1      1      0      0      0X1
   105      0  97.97    0.01  97.97   3.01    105   3.02             GR
                                                                    BLANK_LINE
QT   1     16                                                        QT
X1   8      4      0    3.02      1      1      1      0      0      0X1
   105      0  97.87    0.01  97.87   3.01    105   3.02             GR
                                                                    BLANK_LINE
     1     18                                                        QT
X1   9      4      0    3.02      1      1      1      0      0      0X1
GR 105      0  97.77    0.01  97.77   3.01    105   3.02             GR
                                                                    BLANK_LINE
     1     20                                                        QT
X1  10      4      0    3.02      1      1      1      0      0      0X1
GR 105      0  97.67    0.01  97.67   3.01    105   3.02             GR
                                                                    BLANK_LINE
     1     22                                                        QT
X1  11      4      0    3.02      1      1      1      0      0      0X1
GR 105      0  97.57    0.01  97.57   3.01    105   3.02             GR
                                                                    BLANK_LINE
QT   1     24                                                        QT
X1  12      4      0    3.02      1      1      1      0      0      0X1
   105      0  97.47    0.01  97.47   3.01    105   3.02             GR
                                                                    BLANK_LINE
QT   1     26                                                        QT
X1  13      4      0    3.02      1      1      1      0      0      0X1
   105      0  97.37    0.01  97.37   3.01    105   3.02             GR
                                                                    BLANK_LINE
     1     28                                                        QT
X1  14      4      0    3.02      1      1      1      0      0      0X1
GR 105      0  97.27    0.01  97.27   3.01    105   3.02             GR
                                                                    BLANK_LINE
     1     30                                                        QT
X1  15      4      0    3.02      0      0      0      0      0      0X1
GR 105      0  97.17    0.01  97.17   3.01    105   3.02             GR
                                                                     EJ
                                                                     ER
```

THIS RUN EXECUTED 2/ 9/94 15:52: 1

```
****************************************
HEC2 RELEASE DATED SEP 88 UPDATED JUN  1990

ERROR CORR -  01,02,03,04
 MODIFICATION -
****************************************

T1      Grovers Avenue Storm Drain Lateral
        18th St. - Catch Basin Type "M"
T2      Wing Basin - Weir Inlet Control Analysis
T4      Flood Control District of Maricopa County
        Qtotal = 30 cfs; Wing Slope = 10:1, WB Length = 15 ft; Width = 3 ft
        Morrison-Maierle/CSSA      Phoenix, AZ


     Job Cards - Specify Initial Conditions and Program Options
  ICHECK    INQ    NINV    IDIR    STRT   METRIC  HVINS      Q   WSEL      FQ

J1  ICHECK    INQ      NINV     IDIR     STRT     METRIC    HVINS     Q        WSEL     FQ

     0        2        0        1        0        0        0.  3        0  99.70  0


    Multiple Profile Cards
  NPROF   IPLOT   PRFVS  XSECV  XSECH     FN   ALLDC    IBW  CHNIM ITRACE

J2  NPROF    IPLOT    PRFVS    XSECV    XSECH    FN       ALLDC    IBW      CHNIM    ITRACE

   -1        1        0        0        0        0       -1        0        0        0


    Variable Codes for Summary Printout
  SECNO     Q    CWSEL  TOPWID   QCH    QLOB   QROB    VCH   DEPTH DIFWSX

J3  VARIABLE CODES FOR SUMMARY PRINTOUT

   18       43        1        4       14       13       15       26        8       51
  CHSLOP  CRIWS   AREA  STCHL  XLBEL  STCHR   RBEL
   33        2       25       21       23       22       24


    Printout Control Option
  LPRINT  NUMSEC

J5  LPRNT   NUMSEC                  ********REQUESTED SECTION NUMBERS********

  -10      -10


Begin Detailed Cross Section Input
```

Data is presented from LOB to ROB (facing downstream)
Data is presented with most upstream Secno first (supercritical regime)

0.015	0.015	0.015	0	0					
1	0.1								
0	4	0	3.02	1	1	1	0	0	0
105	0	98.67	0.01	98.67	3.01	105	3.02		
1	2								
1	4	0	3.02	1	1	1	0	0	0
105	0	98.57	0.01	98.57	3.01	105	3.02		
1	4								
2	4	0	3.02	1	1	1	0	0	0
105	0	98.47	0.01	98.47	3.01	105	3.02		
1	6								
3	4	0	3.02	1	1	1	0	0	0
105	0	98.37	0.01	98.37	3.01	105	3.02		
1	8								
4	4	0	3.02	1	1	1	0	0	0
105	0	98.27	0.01	98.27	3.01	105	3.02		
1	10								
5	4	0	3.02	1	1	1	0	0	0
105	0	98.17	0.01	98.17	3.01	105	3.02		
1	12								
6	4	0	3.02	1	1	1	0	0	0
105	0	98.07	0.01	98.07	3.01	105	3.02		
1	14								
7	4	0	3.02	1	1	1	0	0	0
105	0	97.97	0.01	97.97	3.01	105	3.02		
1	16								
8	4	0	3.02	1	1	1	0	0	0
105	0	97.87	0.01	97.87	3.01	105	3.02		

QT	1	18								
X1	9	4	0	3.02	1	1	1	0	0	0
	105	0	97.77	0.01	97.77	3.01	105	3.02		
	1	20								
	10	4	0	3.02	1	1	1	0	0	0
GR	105	0	97.67	0.01	97.67	3.01	105	3.02		
QT	1	22								
X1	11	4	0	3.02	1	1	1	0	0	0
	105	0	97.57	0.01	97.57	3.01	105	3.02		
	1	24								
	12	4	0	3.02	1	1	1	0	0	0
GR	105	0	97.47	0.01	97.47	3.01	105	3.02		
QT	1	26								
X1	13	4	0	3.02	1	1	1	0	0	0
	105	0	97.37	0.01	97.37	3.01	105	3.02		
	1	28								
	14	4	0	3.02	1	1	1	0	0	0
GR	105	0	97.27	0.01	97.27	3.01	105	3.02		
QT	1	30								
X1	15	4	0	3.02	0	0	0	0	0	0
	105	0	97.17	0.01	97.17	3.01	105	3.02		

THIS RUN EXECUTED 2/ 9/94 15:52: 4

HEC2 RELEASE DATED SEP 88 UPDATED JUN 1990

ERROR CORR - 01,02,03,04
MODIFICATION -

NOTE- ASTERISK (*) AT LEFT OF CROSS-SECTION NUMBER INDICATES MESSAGE IN SUMMARY OF ERRORS LIST

Wing Basin - Weir Inlet

SUMMARY PRINTOUT

SECNO	Q	CWSEL	TOPWID	XCH	GLOB	GROB	VCH	DEPTH	DIFWEX	XNCHSL	CRIWS	AREA
.000	.10	98.70	3.00	.10	.00	.00	1.10	.03	.00	.00	98.70	.09
1.000	2.00	98.81	3.00	2.00	.00	.00	2.78	.24	.11	-100.00	98.81	.72
2.000	4.00	98.85	3.00	4.00	.00	.00	3.51	.38	.04	-100.00	98.85	1.14
3.000	6.00	98.87	3.00	6.00	.00	.00	4.02	.50	.02	-100.00	98.87	1.49
4.000	8.00	98.87	3.00	8.00	.00	.00	4.43	.60	.00	-100.01	98.87	1.81
5.000	10.00	98.87	3.00	10.00	.00	.00	4.75	.70	.00	-100.00	98.87	2.10
6.000	12.00	98.86	3.00	12.00	.00	.00	5.06	.79	-.01	-100.00	98.86	2.37
7.000	14.00	98.85	3.00	14.00	.00	.00	5.33	.88	-.02	-100.00	98.85	2.63
8.000	16.00	98.83	3.00	16.00	.00	.00	5.57	.96	-.02	-100.00	98.83	2.87
9.000	18.00	98.80	3.00	18.00	.00	.00	5.80	1.03	-.02	-100.01	98.80	3.10
10.000	20.00	98.78	3.00	20.00	.00	.00	6.01	1.11	-.02	-100.00	98.78	3.33
11.000	22.00	98.75	3.00	22.00	.00	.00	6.20	1.18	-.03	-100.00	98.75	3.55
12.000	24.00	98.72	3.00	24.00	.00	.00	6.38	1.25	-.03	-100.00	98.72	3.76
13.000	26.00	98.69	3.00	26.00	.00	.00	6.56	1.32	-.03	-100.00	98.69	3.97
14.000	28.00	98.64	3.00	28.00	.00	.00	6.79	1.37	-.06	-100.01	98.66	4.12
15.000	30.00	98.62	3.00	30.00	.00	.00	6.88	1.45	-.01	-100.00	98.62	4.36

SUMMARY OF ERRORS AND SPECIAL NOTES

```
CAUTION SECNO=     1.000  PROFILE=  1  CRITICAL DEPTH ASSUMED
CAUTION SECNO=     1.000  PROFILE=  1  PROBABLE MINIMUM SPECIFIC ENERGY
CAUTION SECNO=     1.000  PROFILE=  1  20 TRIALS ATTEMPTED TO BALANCE WSEL

CAUTION SECNO=     2.000  PROFILE=  1  CRITICAL DEPTH ASSUMED
CAUTION SECNO=     2.000  PROFILE=  1  PROBABLE MINIMUM SPECIFIC ENERGY
CAUTION SECNO=     2.000  PROFILE=  1  20 TRIALS ATTEMPTED TO BALANCE WSEL

CAUTION SECNO=     3.000  PROFILE=  1  CRITICAL DEPTH ASSUMED
CAUTION SECNO=     3.000  PROFILE=  1  PROBABLE MINIMUM SPECIFIC ENERGY
CAUTION SECNO=     3.000  PROFILE=  1  20 TRIALS ATTEMPTED TO BALANCE WSEL

CAUTION SECNO=     4.000  PROFILE=  1  CRITICAL DEPTH ASSUMED
CAUTION SECNO=     4.000  PROFILE=  1  PROBABLE MINIMUM SPECIFIC ENERGY
CAUTION SECNO=     4.000  PROFILE=  1  20 TRIALS ATTEMPTED TO BALANCE WSEL

CAUTION SECNO=     5.000  PROFILE=  1  CRITICAL DEPTH ASSUMED
CAUTION SECNO=     5.000  PROFILE=  1  PROBABLE MINIMUM SPECIFIC ENERGY
CAUTION SECNO=     5.000  PROFILE=  1  20 TRIALS ATTEMPTED TO BALANCE WSEL

CAUTION SECNO=     6.000  PROFILE=  1  CRITICAL DEPTH ASSUMED
CAUTION SECNO=     6.000  PROFILE=  1  PROBABLE MINIMUM SPECIFIC ENERGY
CAUTION SECNO=     6.000  PROFILE=  1  20 TRIALS ATTEMPTED TO BALANCE WSEL

CAUTION SECNO=     7.000  PROFILE=  1  CRITICAL DEPTH ASSUMED
CAUTION SECNO=     7.000  PROFILE=  1  PROBABLE MINIMUM SPECIFIC ENERGY
CAUTION SECNO=     7.000  PROFILE=  1  20 TRIALS ATTEMPTED TO BALANCE WSEL

CAUTION SECNO=     8.000  PROFILE=  1  CRITICAL DEPTH ASSUMED
CAUTION SECNO=     8.000  PROFILE=  1  PROBABLE MINIMUM SPECIFIC ENERGY
CAUTION SECNO=     8.000  PROFILE=  1  20 TRIALS ATTEMPTED TO BALANCE WSEL

CAUTION SECNO=     9.000  PROFILE=  1  CRITICAL DEPTH ASSUMED
CAUTION SECNO=     9.000  PROFILE=  1  PROBABLE MINIMUM SPECIFIC ENERGY
CAUTION SECNO=     9.000  PROFILE=  1  20 TRIALS ATTEMPTED TO BALANCE WSEL

CAUTION SECNO=    10.000  PROFILE=  1  CRITICAL DEPTH ASSUMED
CAUTION SECNO=    10.000  PROFILE=  1  PROBABLE MINIMUM SPECIFIC ENERGY
CAUTION SECNO=    10.000  PROFILE=  1  20 TRIALS ATTEMPTED TO BALANCE WSEL

CAUTION SECNO=    11.000  PROFILE=  1  CRITICAL DEPTH ASSUMED
CAUTION SECNO=    11.000  PROFILE=  1  PROBABLE MINIMUM SPECIFIC ENERGY
CAUTION SECNO=    11.000  PROFILE=  1  20 TRIALS ATTEMPTED TO BALANCE WSEL

CAUTION SECNO=    12.000  PROFILE=  1  CRITICAL DEPTH ASSUMED
CAUTION SECNO=    12.000  PROFILE=  1  PROBABLE MINIMUM SPECIFIC ENERGY
CAUTION SECNO=    12.000  PROFILE=  1  20 TRIALS ATTEMPTED TO BALANCE WSEL

CAUTION SECNO=    13.000  PROFILE=  1  CRITICAL DEPTH ASSUMED
CAUTION SECNO=    13.000  PROFILE=  1  PROBABLE MINIMUM SPECIFIC ENERGY
CAUTION SECNO=    13.000  PROFILE=  1  20 TRIALS ATTEMPTED TO BALANCE WSEL
```

ng Basin - Weir Inlet

SUMMARY PRINTOUT

STCHL	XLBEL	STCHR	RBEL
.000	105.00	3.02	105.00
.000	105.00	3.02	105.00
.000	105.00	3.02	105.00
.000	105.00	3.02	105.00
.000	105.00	3.02	105.00
.000	105.00	3.02	105.00
.000	105.00	3.02	105.00
.000	105.00	3.02	105.00
.000	105.00	3.02	105.00
.000	105.00	3.02	105.00
.000	105.00	3.02	105.00
.000	105.00	3.02	105.00
.000	105.00	3.02	105.00
.000	105.00	3.02	105.00
.000	105.00	3.02	105.00
.000	105.00	3.02	105.00

```
CAUTION SECNO=    14.000  PROFILE=  1  MINIMUM SPECIFIC ENERGY

CAUTION SECNO=    15.000  PROFILE=  1  CRITICAL DEPTH ASSUMED
CAUTION SECNO=    15.000  PROFILE=  1  PROBABLE MINIMUM SPECIFIC ENERGY
CAUTION SECNO=    15.000  PROFILE=  1  20 TRIALS ATTEMPTED TO BALANCE WSEL

Normal program termination
```

PROFILE FOR STREAM Wing Basin - Weir Inlet

PLOTTED POINTS (BY PRIORITY) E-ENERGY,W-WATER SURFACE,I-INVERT,C-CRITICAL W.S.,L-LEFT BANK,R-RIGHT BANK,M-LOWER END STA

ELEVATION SECNO	97. CUMDIS	98.	99.	100.	101.	102.	103.	104.	105.	106.
.00	0.	.	WE	.	.	.	.	.	L	.
	0.	.	WE	.	.	.	.	.	L	.
	0.	.	IE	.	.	.	.	.	L	.
	0.	.	IE	.	.	.	.	.	L	.
	0.	.	IE	.	.	.	.	.	L	.
	1.	.	IWE	.	.	.	.	.	L	.
	1.	.	I WE	.	.	.	.	.	L	.
	1.	.	I WE	.	.	.	.	.	L	.
	1.	.	I WE	.	.	.	.	.	L	.
	1.	.	I WE	.	.	.	.	.	L	.
1.00	1.	.	I W E	.	.	.	.	.	L	.
	1.	.	I W E	.	.	.	.	.	L	.
	1.	.	I W E	.	.	.	.	.	L	.
	1.	.	I WE	.	.	.	.	.	L	.
	1.	.	I WE	.	.	.	.	.	L	.
	2.	.	I WE	.	.	.	.	.	L	.
	2.	.	I WE	.	.	.	.	.	L	.
	2.	.	I WE	.	.	.	.	.	L	.
	2.	.	I WE	.	.	.	.	.	L	.
	2.	.	I W E.	.	.	.	.	.	L	.
2.00	2.	.	I W E.	.	.	.	.	.	L	.
	2.	.	I W E.	.	.	.	.	.	L	.
	2.	.	I W E.	.	.	.	.	.	L	.
	2.	.	I W E.	.	.	.	.	.	L	.
	2.	.	I W E.	.	.	.	.	.	L	.
	2.	.	I W E.	.	.	.	.	.	L	.
	3.	.	I W E.	.	.	.	.	.	L	.
	3.	.	I W E.	.	.	.	.	.	L	.
	3.	.	I W E.	.	.	.	.	.	L	.
	3.	.	I W E.	.	.	.	.	.	L	.
	3.	.	I W E	.	.	.	.	.	L	.
3.00	3.	.	I W E	.	.	.	.	.	L	.
	3.	.	I W E	.	.	.	.	.	L	.
	3.	.	I W E	.	.	.	.	.	L	.
	3.	.	I W E	.	.	.	.	.	L	.
	3.	.	I W E	.	.	.	.	.	L	.
	4.	.	I W E	.	.	.	.	.	L	.
	4.	.	I W E	.	.	.	.	.	L	.
	4.	.	I W E	.	.	.	.	.	L	.
	4.	.	I W E	.	.	.	.	.	L	.
	4.	.	I W E	.	.	.	.	.	L	.
4.00	4.	.	I W E	.	.	.	.	.	L	.
	4.	.	I W E	.	.	.	.	.	L	.
	4.	.	I W E	.	.	.	.	.	L	.
	4.	.	I W E	.	.	.	.	.	L	.
	4.	.	I W E	.	.	.	.	.	L	.
	5.	.	I W E	.	.	.	.	.	L	.
	5.	.	I W E	.	.	.	.	.	L	.
	5.	.	I W E	.	.	.	.	.	L	.

```
       5.  .       I     W  E      .       .       .       .       .     L .       .       .
       5.  .       I     W  E      .       .       .       .       .     L .       .       .
5.00   5.  .       I     W  .E     .       .       .       .       .     L .       .       .
       5.  .       I     W  .E     .       .       .       .       .     L .       .       .
       5.  .       I     W  .E     .       .       .       .       .     L .       .       .
       5.  .       I     W  .E     .       .       .       .       .     L .       .       .
       5.  .       I     W  .E     .       .       .       .       .     L .       .       .
       6.  .       I     W  .E     .       .       .       .       .     L .       .       .
       6.  .      I.     W  .E     .       .       .       .       .     L .       .       .
       6.  .      I.     W  .E     .       .       .       .       .     L .       .       .
       6.  .      I.     W  .E     .       .       .       .       .     L .       .       .
       6.  .      I.     W  .E     .       .       .       .       .     L .       .       .
6.00   6.  .      I.     W  .E     .       .       .       .       .     L .       .       .
       6.  .      I.     W  .E     .       .       .       .       .     L .       .       .
       6.  .      I.     W  .E     .       .       .       .       .     L .       .       .
       6.  .      I.     W  .E     .       .       .       .       .     L .       .       .
       6.  .      I.     W  .E     .       .       .       .       .     L .       .       .
       7.  .      I.     W  .E     .       .       .       .       .     L .       .       .
       7.  .     I .     W  .E     .       .       .       .       .     L .       .       .
       7.  .     I .     W  .E     .       .       .       .       .     L .       .       .
       7.  .     I .     W  .E     .       .       .       .       .     L .       .       .
       7.  .     I .     W  .E     .       .       .       .       .     L .       .       .
7.00   7.  .     I .     W  .E     .       .       .       .       .     L .       .       .
       7.  .     I .     W  .E     .       .       .       .       .     L .       .       .
       7.  .     I .     W  .E     .       .       .       .       .     L .       .       .
       7.  .     I .     W  .E     .       .       .       .       .     L .       .       .
       7.  .     I .     W  .E     .       .       .       .       .     L .       .       .
       8.  .     I .     W  .E     .       .       .       .       .     L .       .       .
       8.  .    I  .     W  .E     .       .       .       .       .     L .       .       .
       8.  .    I  .     W  .E     .       .       .       .       .     L .       .       .
       8.  .    I  .     W  .E     .       .       .       .       .     L .       .       .
       8.  .    I  .     W  .E     .       .       .       .       .     L .       .       .
8.00   8.  .    I  .     W  .E     .       .       .       .       .     L .       .       .
       8.  .    I  .     W  .E     .       .       .       .       .     L .       .       .
       8.  .    I  .     W  .E     .       .       .       .       .     L .       .       .
       8.  .    I  .     W  .E     .       .       .       .       .     L .       .       .
       8.  .    I  .    W   .E     .       .       .       .       .     L .       .       .
       9.  .    I  .    W   . E    .       .       .       .       .     L .       .       .
       9.  .   I   .    W   . E    .       .       .       .       .     L .       .       .
       9.  .   I   .    W   . E    .       .       .       .       .     L .       .       .
       9.  .   I   .    W   . E    .       .       .       .       .     L .       .       .
       9.  .   I   .    W   . E    .       .       .       .       .     L .       .       .
9.00   9.  .   I   .    W   . E    .       .       .       .       .     L .       .       .
       9.  .   I   .    W   . E    .       .       .       .       .     L .       .       .
       9.  .   I   .    W   . E    .       .       .       .       .     L .       .       .
       9.  .   I   .    W   . E    .       .       .       .       .     L .       .       .
      10.  .   I   .    W   . E    .       .       .       .       .     L .       .       .
      10.  .  I    .    W   . E    .       .       .       .       .     L .       .       .
      10.  .  I    .    W   . E    .       .       .       .       .     L .       .       .
      10.  .  I    .    W   . E    .       .       .       .       .     L .       .       .
      10.  .  I    .    W   . E    .       .       .       .       .     L .       .       .
10.00 10.  .  I    .    W   . E    .       .       .       .       .     L .       .       .
      10.  .  I    .    W   . E    .       .       .       .       .     L .       .       .
      10.  .  I    .    W   . E    .       .       .       .       .     L .       .       .
      10.  .  I    .    W   . E    .       .       .       .       .     L .       .       .
      10.  .  I    .    W   . E    .       .       .       .       .     L .       .       .
      11.  .  I    .    W   . E    .       .       .       .       .     L .       .       .
      11.  . I     .    W   . E    .       .       .       .       .     L .       .       .
      11.  . I     .    W   . E    .       .       .       .       .     L .       .       .
      11.  . I     .    W   . E    .       .       .       .       .     L .       .       .
      11.  . I     .    W   . E    .       .       .       .       .     L .       .       .
```

```
11.00  11.  .  I   .   W  . E   .   .   .   .   .   L .   .   .
       11.  .  I   .   W  . E   .   .   .   .   .   L .   .   .
       11.  .  I   .   W  . E   .   .   .   .   .   L .   .   .
       11.  .  I   .   W  . E   .   .   .   .   .   L .   .   .
       11.  .  I   .   W  . E   .   .   .   .   .   L .   .   .
       12.  .  I   .   W  . E   .   .   .   .   .   L .   .   .
       12.  . I    .   W  . E   .   .   .   .   .   L .   .   .
       12.  . I    .   W  . E   .   .   .   .   .   L .   .   .
       12.  . I    .   W  . E   .   .   .   .   .   L .   .   .
       12.  . I    .   W  . E   .   .   .   .   .   L .   .   .
12.00  12.  . I    .   W  . E   .   .   .   .   .   L .   .   .
       12.  . I    .   W  . E   .   .   .   .   .   L .   .   .
       12.  . I    .   W  . E   .   .   .   .   .   L .   .   .
       12.  . I    .   W  . E   .   .   .   .   .   L .   .   .
       12.  . I    .   W  . E   .   .   .   .   .   L .   .   .
       13.  . I    .   W  . E   .   .   .   .   .   L .   .   .
       13.  . I    .   W  . E   .   .   .   .   .   L .   .   .
       13.  . I    .   W  . E   .   .   .   .   .   L .   .   .
       13.  . I    .   W  . E   .   .   .   .   .   L .   .   .
       13.  . I    .   W  . E   .   .   .   .   .   L .   .   .
13.00  13.  . I    .   W  . E   .   .   .   .   .   L .   .   .
       13.  . I    .   W  . E   .   .   .   .   .   L .   .   .
       13.  . I    .   W  . E   .   .   .   .   .   L .   .   .
       13.  . I    .   W  . E   .   .   .   .   .   L .   .   .
       13.  . I    .   W  . E   .   .   .   .   .   L .   .   .
       14.  . I    .   W  . E   .   .   .   .   .   L .   .   .
       14.  .I     .   W  . E   .   .   .   .   .   L .   .   .
       14.  .I     .   W  . E   .   .   .   .   .   L .   .   .
       14.  .I     .   W  . E   .   .   .   .   .   L .   .   .
       14.  .I     .   W  . E   .   .   .   .   .   L .   .   .
14.00  14.  .I     .   W  . E   .   .   .   .   .   L .   .   .
       14.  .I     .   W  . E   .   .   .   .   .   L .   .   .
       14.  .I     .   W  . E   .   .   .   .   .   L .   .   .
       14.  .I     .   W  . E   .   .   .   .   .   L .   .   .
       14.  .I     .   W  . E   .   .   .   .   .   L .   .   .
       15.  I      .   W  . E   .   .   .   .   .   L .   .   .
       15.  I      .   W  . E   .   .   .   .   .   L .   .   .
       15.  I      .   W  . E   .   .   .   .   .   L .   .   .
       15.  I      .   W  . E   .   .   .   .   .   L .   .   .
       15.  I      .   W  . E   .   .   .   .   .   L .   .   .
15.00  15.  I      .   W  . E   .   .   .   .   .   L .   .   .
```

```
DEFINT A-Z
SUB Compute
```

Computer Code

Check Computer Calculations

```
FOR i = 1 TO numpipes

Set j = the downstream pipe number
        j = dpn(i)

Compute the downstream ground elevation of the pipe
        ged(i) = geu(j)

Compute the downstream crown elevation of the pipe
        ced(i) = ceu(j)

Compute the downstream station of the pipe
        stad(i) = stau(j)

Compute the upstream station of the pipe
        stau(i) = stad(i) + l(i)

Compute the invert elevation for the downstream end of the pipe
        IF type$(i) = "CBC" THEN ied(i) = ced(i) - rise(i) ELSE ied(i) = ced(i)

Compute the invert elevation for the upstream end of the pipe
        IF type$(i) = "CBC" THEN ieu(i) = ceu(i) - rise(i) ELSE ieu(i) = ceu(i)

Compute the pipe slope
        so(i) = (ieu(i) - ied(i)) / l(i)

Compute pipe hydraulic data using Manning's Equation
        IF type$(i) = "CSC" THEN
                area(i) = span(i) * rise(i)                 'rectangular pipe
                perimeter(i) = 2 * (span(i) - rise(i))
                hydradius(i) = area(i) / perimeter(i)

        ELSE
                area(i) = 3.14 * d(i) ^ 2 / 4 / 144             'circular pipe
                perimeter(i) = 3.14 * d(i) / 12
                hydradius(i) = area(i) / perimeter(i)


        END IF


Compute the unit flow per pipe
        qu(i) = q(i) / m(i)

Compute the velocity and the velocity head in the pipe
        v(i) = qu(i) / area(i)
        hv(i) = v(i) ^ 2 / 2 / 32.2

Compute the energy slope
        se(i) = (v(i) * n(i) / 1.49 / (hydradius(i) ^ (2 / 3))) ^ 2

Compute the friction loss in the pipe
        h(i) = l(i) * se(i)

Compute the minor loss at the downstream end of the pipe
        deltav = v(i) - v(j) * COS(angle(i) / 57.2958)

        REM 'If deltav > 0 then use expansion loss coefficient
        REM         IF deltav > 0 THEN k(i) = 1 ELSE k(i) = .5

        REM 'If deltav <= 0 then use contraction loss coefficient
```

```
        ml(i) = deltav ^ 2 / 2 / 32.2 * k(i)

'Compute the energy grade elevation at the downstream end of the pipe
        egd(i) = egu(j) + ml(i)

'Compute the energy grade elevation at the upstream end of the pipe
        egu(i) = egd(i) + h(i)

'Compute the hydraulic grade elevation at the downstream end of the pipe
        hgd(i) = egd(i) - hv(i)

'Compute the hydraulic grade elevation at the upstream end of the pipe
        hgu(i) = egu(i) - hv(i)

'Compute the ground cover above the pipe crown at the downstream end
        coverd(i) = ged(i) - ced(i)

'Compute the ground cover above the pipe crown at the upstream end
        coveru(i) = geu(i) - ceu(i)

'Compute the depth below ground of the HGL at the downstream end
        DepthHgd(i) = ged(i) - hgd(i)

'Compute the depth below ground of the HGL at the upstream end
        DepthHgu(i) = geu(i) - hgu(i)

'Compute the depth of the HGL above the pipe Crown downstream end
        HglCrownd(i) = hgd(i) - ced(i)

'Compute the depth of the HGL above the pipe Crown upstream end
        HglCrownu(i) = hgu(i) - ceu(i)

NEXT i

'Compute job statistics
        tlp = total(l())                    'total pipe length
        lp = max(l())                      'longest pipe
        sp = min(l())                      'shortest pipe
        MaxCover = max(coverd())           'maximum cover
        MinCover = min(coverd())          'minimum cover
        MaxFlow = max(q())                 'maximum flow
        MinFlow = min(q())                 'minimum flow
        MaxVel = max(v())                  'maximum velocity
        MinVel = min(v())                  'minimum velocity
        MaxDepthHgd = max(DepthHgd())          'maximum ground - HGL
        MinDepthHgd = min(DepthHgd())          'minimum ground - HGL
        MaxHglCrown = max(HglCrownd())          'maximum HGL - crown elevation
        MinHglCrown = min(HglCrownd())         'minimum HGL - crown elevation

PrintOutput

END SUB
```

JOB NAME: GROVERS AVENUE STORM DRAIN LATERAL
JOB NUMBER: 8156.001
BY: ALEX BATT
Date: 01-19-1994
Time: 11:44:58

Computer Code Check for RCP

Job Statistics:

Number of Pipes	=	11
Total Length of Pipe	=	4,909 Feet
Longest Pipe	=	1,346.00 Feet
Shortest Pipe	=	12.00 Feet
Maximum Flow	=	513.00 cfs
Minimum Flow	=	15.00 cfs
Maximum Velocity	=	11.00 fps
Minimum Velocity	=	4.78 fps
Maximum Cover Above Crown	=	19.58 Feet
Minimum Cover Above Crown	=	8.35 Feet
Maximum Ground - HGL	=	7.80 Feet
Minimum Ground - HGL	=	3.09 Feet
Maximum HGL - Crown	=	12.74 Feet
Minimum HGL - Crown	=	2.58 Feet

+++++++1+++++++++2+++++++++3+++++++++4+++++++++5+++++++++6+++++++++7+++++++++8+++++++++9+++++++++10++++++++++11++++++++++12++++++++++13

TABLE 1 - INPUT DATA

Pipe Number	Station	Length (Feet)	Type of Pipe	Diameter (Inches)	Span (Feet)	Rise (Feet)	Number of Pipes	Flow (cfs)	Flow Per Pipe	Ground Elevation	Crown Elevation	Downstream Pipe No.
1	-172	237	RCP	93	0.00	0.00	1	513.00	513.00	1447.40	1427.82	0
	65									1447.40	1429.85	
2	65	12	CSC	96	12.00	8.00	1	503.00	503.00	1447.40	1429.85	1
	77									1447.40	1435.00	
3	77	1,221	RCP	96	0.00	0.00	1	503.00	503.00	1447.40	1435.00	2
	1,298									1451.00	1440.87	
4	1,298	1,346	RCP	84	0.00	0.00	1	350.00	350.00	1451.00	1440.87	3
	2,644									1454.00	1445.65	
5	2,644	657	RCP	48	0.00	0.00	1	103.00	103.00	1454.00	1445.65	4
	3,301									1458.00	1448.89	
6	3,301	550	RCP	42	0.00	0.00	1	84.00	84.00	1458.00	1448.89	5
	3,851									1462.00	1452.15	
7	3,851	486	RCP	42	0.00	0.00	1	84.00	84.00	1462.00	1452.15	6
	4,337									1462.00	1452.82	
8	1,298	100	RCP	50	0.00	0.00	1	139.00	139.00	1451.00	1440.87	3
	1,398									1451.50	1441.70	
9	2,644	100	RCP	84	0.00	0.00	1	245.00	245.00	1454.00	1445.65	4
	2,744									1454.50	1446.65	
10	3,301	100	RCP	24	0.00	0.00	1	15.00	15.00	1458.00	1448.89	5
	3,401									1458.50	1449.89	
11	4,337	100	RCP	42	0.00	0.00	1	81.00	81.00	1462.00	1452.82	7
	4,437									1462.50	1453.82	

+++++++1+++++++++2+++++++++3+++++++++4+++++++++5+++++++++6+++++++++7+++++++++8+++++++++9+++++++++10++++++++++11++++++++++12++++++++++13

TABLE 2 - HYDRAULIC DESIGN DATA

HAND CHECK COMPUTER CALCS.

Pipe Number	Area (Sq Ft)	Perimeter (Feet)	Radius (Feet)	Velocity (fps)	Vel. Head (Feet)	Energy Slope	Pipe Slope	K	Angle	Minor Loss (Feet)	Pipe Loss (Feet)	EGL (Feet)	HGL (Feet)
				0.00								1439.60	1439.60
1	46.64	24.00	1.94	11.00	1.88	0.00323	0.00857	1.0	0	1.88	0.77	1441.48	1439.60
												1442.24	1440.37
2	96.00	40.00	2.40	5.24	0.43	0.00055	0.42917	1.5	0	0.77	0.01	1443.02	1442.59
		$\frac{\pi d^2}{4} = 3.1416(8)^2/4 = 50.27$ SF.							GIVEN VALUE			1443.02	1442.60
3	50.24	25.00	2.01	10.01	1.56	0.00256	0.00481	0.5	0	0.18	3.13	1443.20	1441.64
			$\pi d = 3.1416(7) = 21.99'$							GIVEN VALUE		1445.33	1444.77
4	38.47	22.00	1.75	9.10	1.29	0.00255	0.00355	0.3	0	0.00	3.43	1445.34	1445.05
				$A/P = 12.56/13 = 0.97'$								1449.77	1448.48
5	12.56	13.00	0.97	8.20	1.04	0.00457	0.00493	0.3	0	0.00	3.00	1449.77	1448.73
				$Q/A = 84/9.62 = 8.73$ FPS								1452.77	1451.73
6	9.62	11.00	0.87	8.74	1.18	0.00592	0.00595	0.3	0	0.00	3.26	1452.77	1451.59
					$V^2/2g = 8.74^2/64.4 = 1.19'$							1456.03	1454.84
7	9.62	11.00	0.87	8.74	1.18	0.00592	0.00136	0.3	0	0.00	2.88	1456.03	1454.84
						$S_e = [(V \cdot n)/(1.486\, r^{2/3})]^2 = .0025$	$[(7.08(.012))/(1.486(1.23)^{2/3})]^2$					1458.91	1457.72
8	19.63	16.00	1.23	7.08	0.78	0.00248	0.00830	1.0	90	0.78	0.25	1447.11	1446.33
						$S_o = (INV._{N+1} - INV._N)/L = \frac{1439.65 - 1438.65}{100} = .01'/'$						1447.36	1446.58
9	38.47	22.00	1.75	6.37	0.63	0.00125	0.01000	1.0	90	0.63	0.12	1450.40	1449.77
						$M_L = (\Delta V^2/2g)K = [(4.78 - 8.20\cos 90))^2/64.4]\,1.0 = 0.35'$						1450.52	1449.89
10	3.14	6.00	0.52	4.78	0.35	0.00351	0.01000	1.0	90	0.35	0.35	1453.13	1452.77
						$h_f = S_e \cdot L = 0.00551 \times 100 = 0.55'$						1453.48	1453.12
11	9.62	11.00	0.87	8.42	1.10	0.00551	0.01000	1.0	90	1.10	0.55	1460.01	1459.91
												1460.56	1459.46

+++++++1+++++++++2+++++++++3+++++++++4+++++++++5+++++++++6+++++++++7+++++++++8+++++++++9+++++++++10++++++++++11++++++++++12++++++++++13

BLE 3 - GRAPH DATA SUMMARY

Pipe Number	Station (Feet)	Ground Elevation	EGL Elevation	HGL Elevation	Crown Elevation	Invert Elevation	Cover (Feet)	Ground-HGL (Feet)	HGL-Crown (Feet)
			1439.60	1439.60					
1	-172	1447.40	1441.48	1439.60	1427.82	1420.11	19.58	7.80	11.78
	65	1447.40	1442.24	1440.37	1429.85	1422.14	17.55	7.03	10.52
2	65	1447.40	1443.02	1442.59	1429.85	1421.85	17.55	4.81	12.74
	77	1447.40	1443.02	1442.60	1435.00	1427.00	12.40	4.80	7.60
3	77	1447.40	1443.20	1441.64	1435.00	1427.00	12.40	5.76	6.64
	1298	1451.00	1446.33	1444.77	1440.87	1432.87	10.13	6.23	3.90
4	1298	1451.00	1446.34	1445.05	1440.87	1433.87	10.13	5.95	4.18
	2644	1454.00	1449.77	1448.48	1445.65	1438.65	8.35	5.52	2.83
5	2644	1454.00	1449.77	1448.73	1445.65	1441.65	8.35	5.27	3.08
	3301	1458.00	1452.77	1451.73	1448.89	1444.89	9.11	6.27	2.84
6	3301	1458.00	1452.77	1451.59	1448.89	1445.39	9.11	6.41	2.70
	3851	1462.00	1456.03	1454.84	1452.16	1448.66	9.84	7.16	2.68
7	3851	1462.00	1456.03	1454.84	1452.16	1448.66	9.84	7.16	2.68
	4337	1462.00	1458.91	1457.72	1452.82	1449.32	9.18	4.28	4.90
8	1298	1451.00	1447.11	1446.33	1440.87	1435.87	10.13	4.67	5.46
	1398	1451.50	1447.36	1446.58	1441.70	1436.70	9.80	4.92	4.88
9	2644	1454.00	1450.40	1449.77	1445.65	1438.65	8.35	4.23	4.12
	2744	1454.50	1450.52	1449.89	1446.65	1439.65	7.85	4.61	3.24
10	3301	1458.00	1453.13	1452.77	1448.89	1446.89	9.11	5.23	3.88
	3401	1458.50	1453.48	1453.12	1449.89	1447.89	8.61	5.38	3.23
11	4337	1462.00	1460.01	1458.91	1452.82	1449.32	9.18	3.09	6.09
	4437	1462.50	1460.56	1459.46	1453.82	1450.32	8.68	3.04	5.64

OK BJ

G. GEOTECHNICAL/SOILS INVESTIGATION

SPEEDIE AND ASSOCIATES
GEOTECHNICAL/MATERIALS/SITE ENGINEERS

11029 N. 24th AVE., SUITE 805 • PHOENIX, ARIZONA 85029 • (602) 997-6391 • FAX (602) 943-5508

JAMES A. SPEEDIE, P.E.
HENRIETTA SPEEDIE, B.S.
GREGG A. CREASER, P.E.
BRETT P. CREASER, P.E.

REPORT ON GEOTECHNICAL INVESTIGATION

DESIGNATION: Grovers Storm Drain

LOCATION: Grovers Avenue,
32nd Street to Cave Creek Road
Phoenix, Arizona

CLIENT: Flood Control District of
Maricopa County

PROJECT NO: 930314SA

DATE: January 18, 1994

Registered Professional Engineer (Civil)
CERTIFICATE NO.
14388
GREGG ALAN
CREASER
Date Signed 1-18-94
ARIZONA, U.S.A.

TABLE OF CONTENTS

PAGE

INTRODUCTION 1

GENERAL ROUTE AND SOIL CONDITIONS 1
- Route Conditions 1
- General Subsurface Conditions 1

ANALYSIS AND RECOMMENDATIONS 1
- Analysis 1
- Utilities Installation 2
- Asphalt Pavement 2

GENERAL 2

APPENDIX

SPEEDIE
AND ASSOCIATES
GEOTECHNICAL / MATERIALS / SITE ENGINEERS
11029 N. 24th AVE., SUITE 805 • PHOENIX, ARIZONA 85029

INTRODUCTION

This report presents the results of a subsoil investigation carried out at the site of a proposed storm drain lateral to be located along Grovers Avenue, from 32nd Street to Cave Creek Road in Phoenix, Arizona.

Preliminary information calls for the construction of an 84-inch storm drain lateral and pavement replacement along Grovers Avenue. It is our understanding that the maximum depth to flow line for the area discussed in this report will be on the order of 20 feet below existing grade.

GENERAL ROUTE AND SOIL CONDITIONS

Route Conditions - The alignment of the proposed storm drain lateral is within the right-of-way of Grovers Avenue. The roadway is paved with asphaltic concrete for the entire length of the proposed route with the exception of approximately 300 feet east of Cave Creek Road which is currently a vacant parcel of land covered with a moderate growth of low lying weeds and grasses. Surrounding land usage is generally residential in nature.

General Subsurface Conditions - Subsoil conditions along the route are somewhat variable. The subsoils consist of strata varying from stiff to hard silty clays and sandy clays with weak to moderate calcareous cementation to clayey sands and gravelly sands with occasional cobbles. In-place dry densities are on the order of 116 pcf with moisture contents on the order of 5 percent. Plasticity indices range from 12 to 17 percent. Field and laboratory resistivity tests conducted indicate resistivity values range from 766 to 2298 ohms-cm with pH values on the order of 8.3 to 8.9.

The subsoils generally exhibit Standard Penetration Resistance (SPT) values of 15 to 50-plus blows per foot in the upper 6 feet, and from 38 to 50-plus blows per foot from 6 to 20 feet. All boring were dry upon completion and groundwater is reported by ADWR to be on the order of 230 feet deep in the general vicinity. Therefore, groundwater should not be a factor in the design or construction of the storm drain lateral.

ANALYSIS AND RECOMMENDATIONS

Analysis - Due to the nature of the coarser grained soils generally encountered around 13 feet deep along the route, significant disturbances from gravel and occasional cobbles may make neat trenches difficult to achieve. Therefore, cast-in-place pipe may not be feasible. Trench excavations for utilities can be accomplished by conventional trenching equipment. Trench walls may experience some sloughing in

the coarser grained soils. If trenches are greater than shoulder-height, precautions must be taken to protect workmen in accordance with all current governmental regulations. No special recommendations are made if pre-cast reinforced concrete pipe is used except that pipe bedding will be require to prevent point loads due to the presence of cobbles. Based on the resistivity tests conducted, the soils are classified by American Iron and Steel Institute as moderate to severely corrosive. We therefore recommend that aluminum alloy or bituminous coated CMP be used in conjunction with a low corrosive bedding material if CMP is desired.

Utilities Installation - Trench excavation, backfilling and compaction should be carried out under MAG Section 601. Backfill of trenches may be carried out with native excavated material, provided that oversized material is removed in the bedding zone. This material should be moisture-conditioned, placed in 8 inch lifts and mechanically compacted. Water settling is not recommended. Compaction requirements as set forth in Section 601 of M.A.G. Specification should be followed.

Asphalt Pavement - If earthwork in paved areas is carried out to finish subgrade elevation as set forth herein, the subgrade will provide adequate support for pavements.

The existing pavement section is currently 2.0 inches of asphalt over 4.0 inches of aggregate base course. Based on the City of Phoenix minimum pavement design for residential streets and our experience in the area, a minimum replacement pavement section of 2.0 inches of asphalt over 6.0 inches of aggregate base course is recommended. This assumes that all subgrades are prepared in accordance with the recommendations contained herein, and paving operations carried out in a proper manner. If pavement subgrade preparation is not carried out immediately prior to paving, the entire area should be proof-rolled at that time with a heavy pneumatic-tired roller to identify locally unstable areas for repair.

Pavement base course material should be A.B.C. per M.A.G. Section 702 Specifications. Asphalt concrete materials and mix design should conform to M.A.G. 710. It is recommended that mix designation D-1/2 or C-3/4 be used for the pavements. While the C-3/4 mix has a somewhat rougher texture, it offers more stability. Pavement installation should be carried out under applicable portions of M.A.G. Section 321.

GENERAL

The scope of this investigation and report does not include regional considerations such as seismic activity and ground fissures resulting from subsidence due to groundwater withdrawal, nor any considerations of hazardous releases or toxic contamination of any type.

Our analysis of data and the recommendations presented herein are based on the assumption that soil conditions do not vary significantly from those found at specific sample locations. Our work has been performed in accordance with generally accepted engineering principles and practice; this warranty is in lieu of all other warranties expressed or implied.

We recommend that a Soils Engineer monitor the earthwork and foundation portions of this project to ensure compliance to project specifications and the field applicability of subsurface conditions which are the basis of the recommendations presented in this report. If any significant changes are made in the scope of work or type of construction that was assumed in this report, we must review such revised conditions to confirm our findings if the conclusions and recommendations presented herein are to apply.

Respectfully submitted,
SPEEDIE & ASSOCIATES

Clay W. Spencer, Staff Geologist

Registered Professional Engineer
Certificate No. 14388
GREGG ALAN CREASER
Date Signed 1-18-94
ARIZONA, U.S.A.

Gregg A. Creaser, P.E. January 18, 1993

APPENDIX

FIELD AND LABORATORY INVESTIGATION

SOIL BORING LOCATION PLAN

SOIL LEGEND

LOG OF TEST BORINGS

TABULATION OF TEST DATA

MOISTURE-DENSITY RELATIONS

SWELL TEST DATA

FIELD AND LABORATORY INVESTIGATION

On December 16, 1993, five soil test borings were drilled at the approximate locations shown on the attached Soil Boring Location Plan. All exploration work was carried out under the full-time supervision of our field technician, who recorded subsurface conditions and obtained samples for laboratory testing. The soil borings were advanced with a truck-mounted CME-55 drill rig utilizing 7-inch diameter hollow stem flight augers. Detailed information regarding the borings and samples obtained can be found on an individual Log of Test Boring prepared for each drilling location.

Laboratory testing consisted of moisture content, dry density, grain-size distribution and plasticity (Atterberg Limits) tests for classification and pavement design parameters. Remolded swell tests were performed on samples compacted to densities and moisture contents expected during construction. All field and laboratory data is presented in this appendix.

SOIL LEGEND

SAMPLE DESIGNATION	DESCRIPTION	
AS	Auger Sample-	A grab sample taken directly from auger flights
BS	Large Bulk Sample-	A grab sample taken directly from auger flights
S	Spoon Sample-	Standard Penetration Test (ASTM D-1586) Driving a 2.0 inch outside diameter split spoon sampler into undisturbed soil for three successive 6-inch increments by means of a 140 lb. weight free falling through a distance of 30 inches. The cumulative number of blows for the final 12 inches of penetration is the Standard Penetration Resistance (N).
RS	Ring Sample-	Driving a 3.0 inch outside diameter spoon equipped with a series of 2.42 inch inside diameter, 1 inch long brass rings, into undisturbed soil for one 12 inch increment by the same means of the Spoon Sample. The blows required for the 12 inches of penetration are recorded.
LS	Liner Sample-	Standard Penetration Test driving a 2.0 inch outside diameter split spoon equipped with two 3 inch long, 1⅜ inch inside diameter brass liners, separated by a 1 inch long spacer, into undisturbed soil by the same means of the spoon sample.
ST	Shelby Tube-	A 3.0 inch outside diameter thin-walled tube continuously pushed into undisturbed soil by a rapid motion, without impact or twisting (ASTM D-1587).
—	Continuous Penetration Resistance-	Driving a 2.0 inch outside diameter "Bullnose Penetrometer" continuously into undisturbed soil by the same means of the spoon sample. The blows for each successive 12 inch increment are recorded.

CONSISTENCY			RELATIVE DENSITY	
Clays & Silts	Blows/Foot *	Strength †	Sands and Gravels	Blows/Foot *
Very Soft	0-2	0-¼	Very Loose	0-4
Soft	2-4	¼-½	Loose	5-10
Firm	5-8	½-1	Medium Dense	11-30
Stiff	9-15	1-2	Dense	31-50
Very Stiff	16-30	2-4	Very Dense	> 50
Hard	> 30	> 4		

* Number of blows of a 140 lb hammer free falling 30 inches to drive a 2 inch O.D. split spoon sampler (ASTM D-1588)

† Unconfined compressive strength in tons/sq ft. Read from a pocket penetrometer

MAJOR DIVISIONS			GRAPH SYMBOL	LETTER SYMBOL	TYPICAL DESCRIPTIONS
Course Grained Soils	Gravel and Gravelly Soils	Clean Gravels		GW	Well Graded Gravels
				GP	Poorly Graded Gravels
More than 50% of material is larger than #200 sieve size	50% Course Fraction is > #4 Sieve Size	Gravels w/Fines		GM	Silty Gravels
				GC	Clayey Gravels
	Sand and Sandy Soils	Clean Sands		SW	Well Graded Sands
				SP	Poorly Graded Sands
	50% Course Fraction is < #4 Sieve Size	Sands w/Fines		SM	Silty Sand
				SC	Clayey Sand
Fine Grained Soils	Silts and Clays			ML	Inorganic Silts, Low Plasticity
	Liquid limit is less than 50%			CL	Inorganic Clays, Low Plasticity
				OL	Organic Silts, High Plasticity
More than 50% of material is smaller than #200 sieve size	Silts and Clays			MH	Inorganic Silts, High Plasticity
	Liquid limit is greater than 50%			CH	Inorganic Clays, High Plasticity
				OH	Organic Clays, High Plasticity
Highly Organic Soils				PT	Peat and Humus, Highly Organic

MATERIAL SIZE	PARTICLE SIZE			
	Lower Limit		Upper Limit	
	mm	Sieve Size †	mm	Sieve Size †
Sands				
Fine	.075	#200	0.42	#40
Medium	0.42	#40	2.00	#10
Course	2.00	#10	4.76	#4
Gravels				
Fine	4.76	#4	191	¾" *
Course	191	¾" *	762	3" *
Cobbles	762	3" *	304.8	12" *
Boulders	304.8	12" *	914.4	36" *

†U.S. Standard *Clear Square Openings

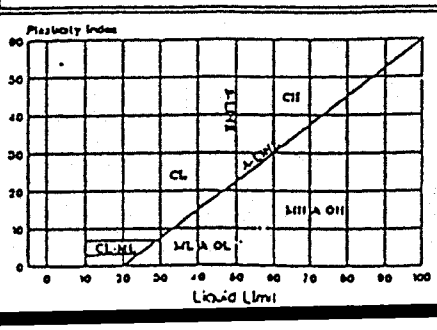

TABULATION OF TEST DATA

PROJECT: Grovers Storm Drain - Grovers Ave. 32nd St. to C.C.
NUMBER: 930314SA

Test Boring Number	Sample Depth (feet)	Water Content %	Dry Density (pcf)	<#200 Sieve %	<#40 Sieve %	<#10 Sieve %	<#4 Sieve %	<3" Sieve %	Liquid Limit %	Plastic Limit %	Plast-city Index %	ASTM Classification
B- 1	21.0	--	--	15	27	53	75	100	37	26	12	SM
B- 2	4.0	--	--	43	58	77	85	100	32	20	12	SC
B- 3	6.0	--	--	63	83	94	97	100	40	24	17	CL
B- 4	16.0	--	--	11	23	50	77	100	38	24	14	SW-SC
B- 5	2.0	5.4	116.3	20	32	62	83	100	32	19	13	SC

SPEEDIE AND ASSOCIATES

MOISTURE-DENSITY RELATIONS

PROJECT: Grovers Storm Drain **PROJECT NO.:** 930314SA **DATE:** 12/16/93
LOCATION: Grovers Ave. 32nd St. to C.C.
BORING NO.: B- 2 **SAMPLE NO.:** BS-2 **SAMPLE DEPTH:** 4.00
METHOD OF COMPACTION: ASTM D698A
LIQUID LIMIT: 32 **PLASTIC LIMIT:** 20 **PLASTICITY INDEX:** 12
CLASSIFICATION: SC **ASTM SOIL DESCRIPTION:** CLAYEY SAND with GRAVEL

MAXIMUM DRY DENSITY: 117.8 PCF **OPTIMUM MOISTURE CONTENT:** 14.0 %

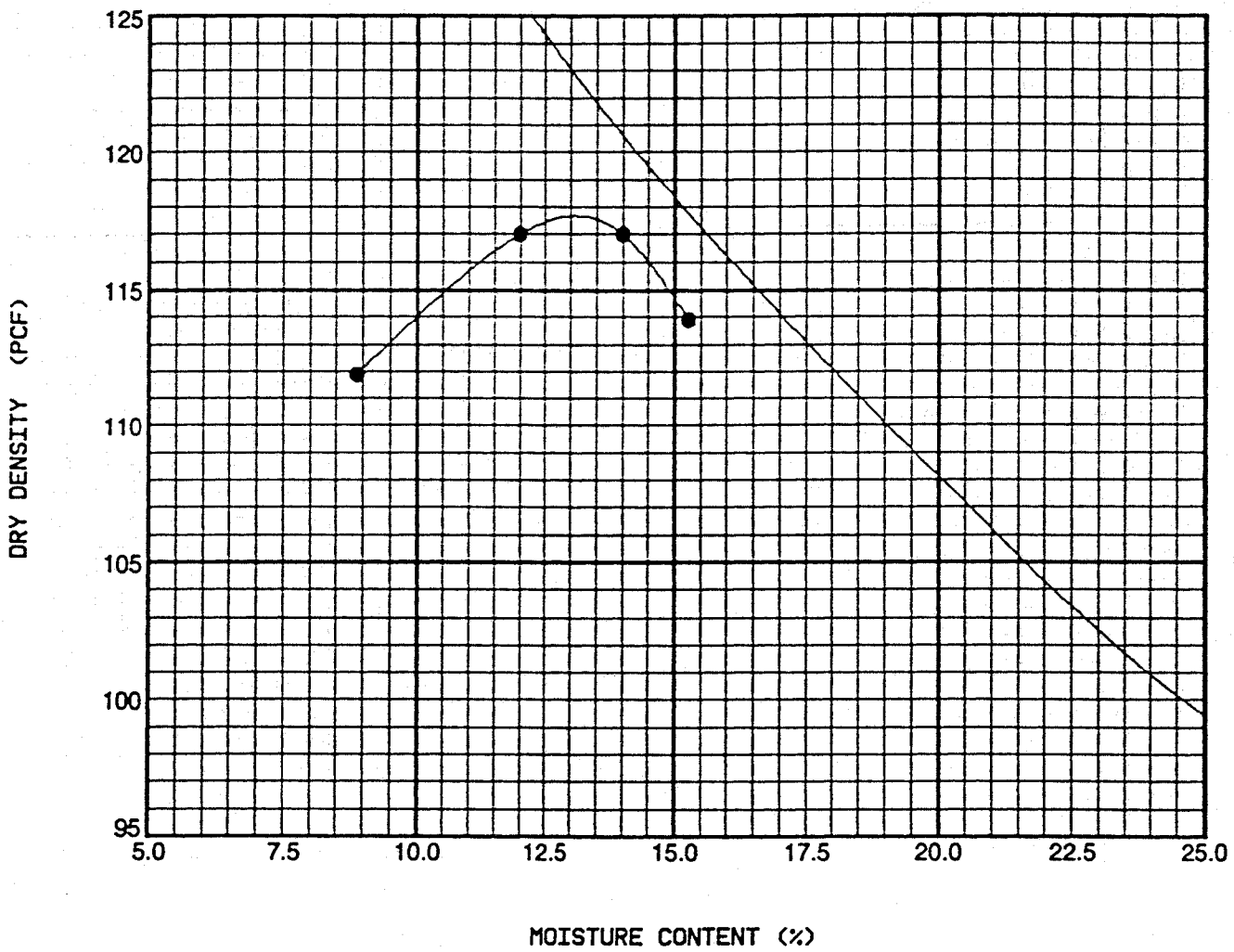

SPEEDIE AND ASSOCIATES

SWELL TEST DATA

BORING/ PIT NO.	SAMPLE DEPTH (FT.)	REMOLDED DRY DENSITY (PCF)	INITIAL MOISTURE CONTENT PERCENT	PERCENT COMPACTION	INITIAL DEGREE OF SATURATION PERCENT	FINAL DEGREE OF SATURATION PERCENT	TOTAL SWELL PERCENT
B-2	4.0	113.1	11.1	96.0*	64	83	2.2

*Based on a maximum dry density of 117,8 pcf at 14.0 percent optimum moisture

Grovers Storm Drain
Grovers Avenue
32nd St. to Cave Creek Rd.
Phoenix, Arizona

SPEEDIE AND ASSOCIATES
GEOTECHNICAL AND SITE ENGINEERS
PROJECT NO. 930314SA

H. ADDITIONAL DESIGN INFORMATION

FLOOD CONTROL DISTRICT OF MARICOPA COUNTY
(FCD #93-21)

GROVERS AVENUE STORM DRAIN LATERAL

LOCATION MAP

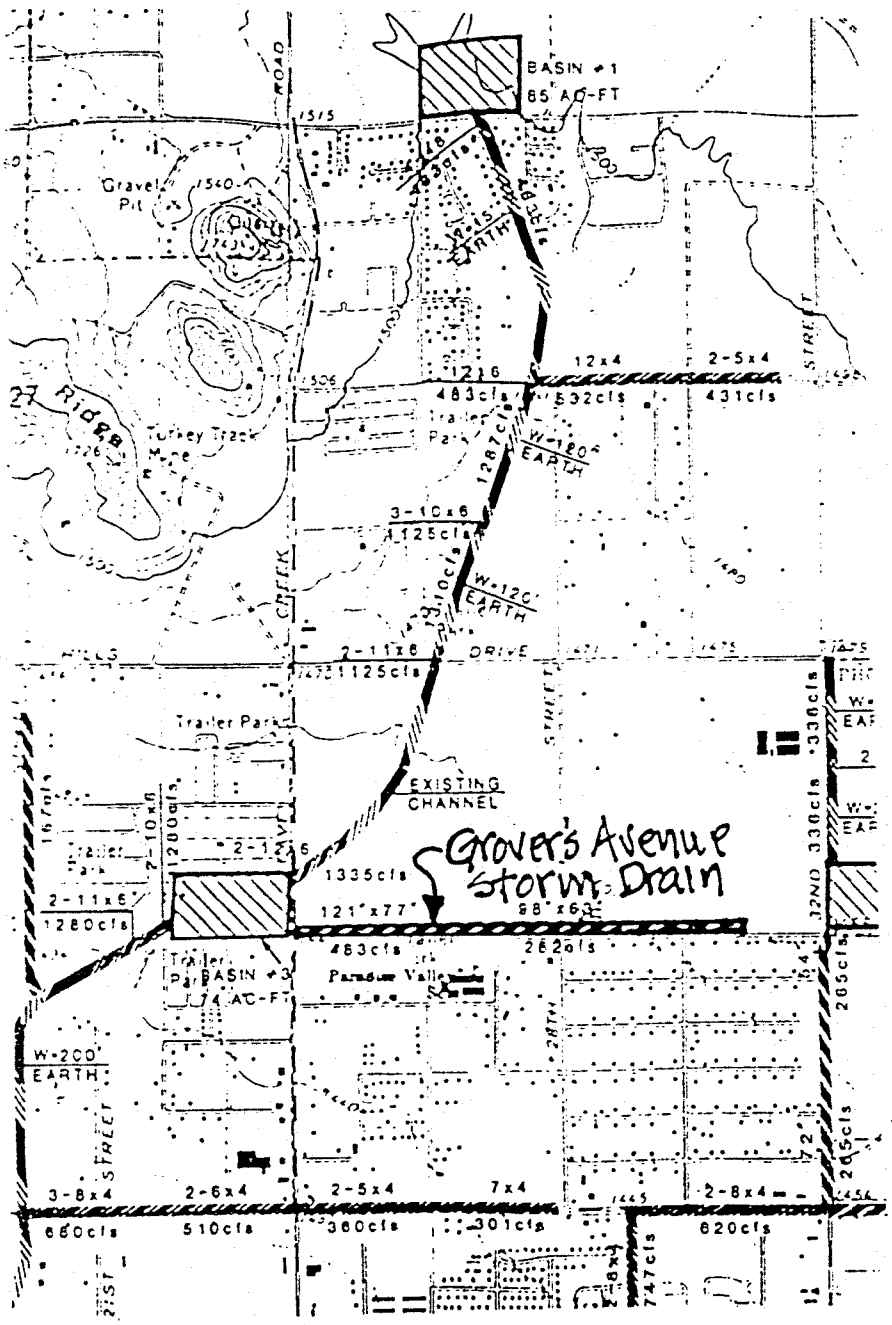

Morrison Maierle/CSSA

GUTTER TRANSITION	
CURB HEIGHT	DIM. 'A'
~~4"~~	~~3'-3"~~
~~5"~~	~~2'-6"~~
6"	1'-9"

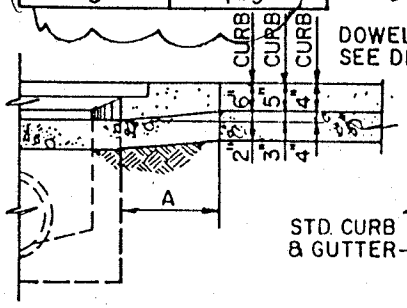

DEPRESSED GUTTER TRANSITION (BOTH SIDES)

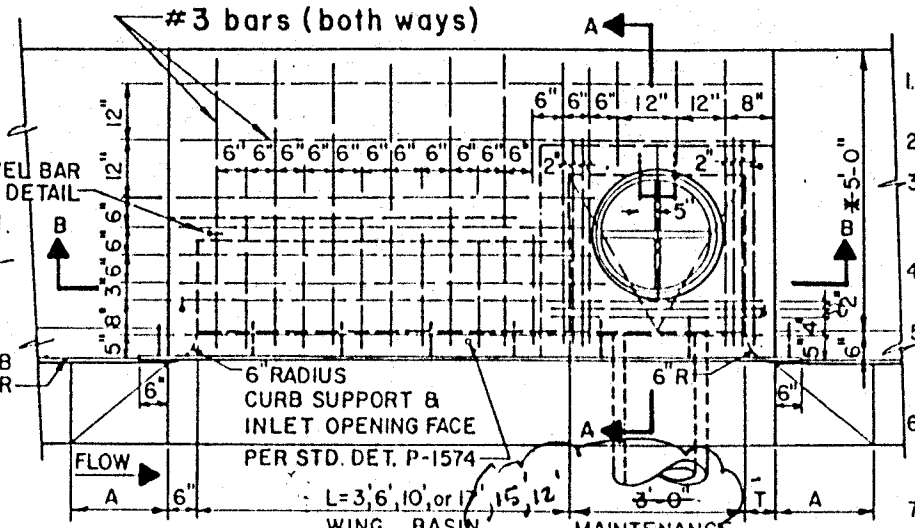

PLAN VIEW

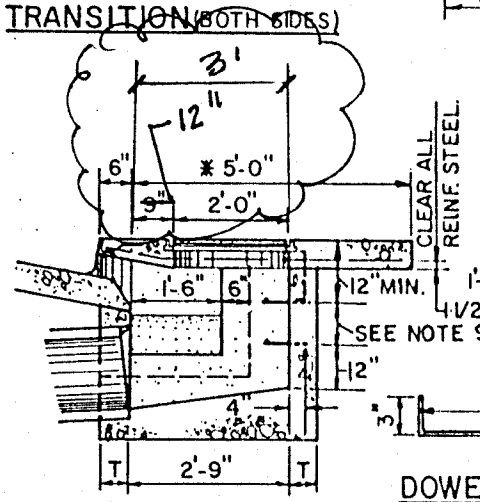

SECTION A-A

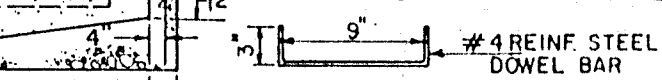

DOWEL BAR DETAIL

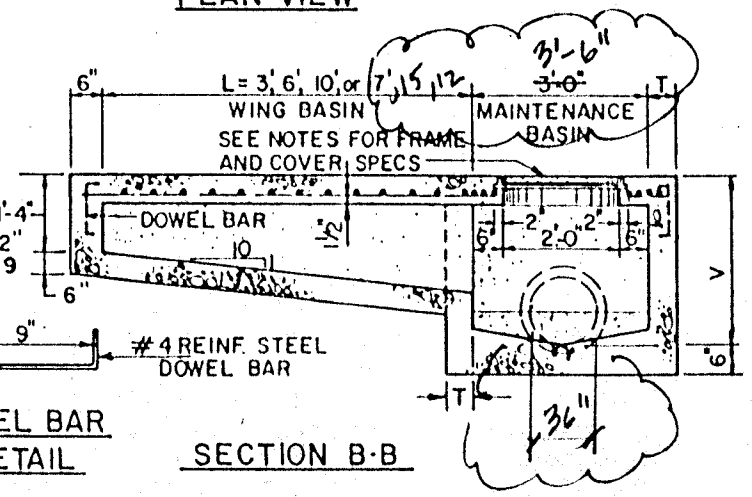

SECTION B-B

NOTES

1. TYPES ARE DESIGNATED AS FOLLOWS: 'M'-NO WING, 'M-1'-ONE WING, 'M-2'-TWO WINGS.
2. ALL CONCRETE SHALL BE CLASS 'A'.
3. ALL REINFORCING STEEL SHALL BE DEFORMED BARS AND SHALL CONFORM TO A.S.T.M. SPECIFICATION 615.
4. CONNECTOR PIPES SHALL BE PLACED IN THE APPROPRIATE WALL OF THE MAINTENANCE BASIN.
5. FLOOR OF BASIN SHALL BE TROWELLED TO A HARD, SMOOTH SURFACE AND SHALL SLOPE FROM ALL DIRECTIONS TO OUTLET.
6. CONSTRUCTION DRAINS SHALL BE INSTALLED IN ALL INLETS BUILT WITH PAVING PROJECTS. (SEE DET. P-1575.)
7. LOCATE WING BASIN ON UPSTREAM SIDE OF MAINTENANCE BASIN FOR TYPE M-1. WING BASINS FOR TYPE M-2 SHALL BE BOTH SIDES OF MAINTENANCE BASIN.
8. STEPS (M.A.G. DET. 428 POLYPROPYLENE) – V=3' (INCL.), PLACE ONE STEP 12" ABOVE THE FLOOR OF THE BASIN. V OVER 3', PLACE STEPS AT 12" INTERVALS FROM THE FLOOR OF THE BASIN WITH THE TOP STEP AT 12" (MIN.) BELOW THE TOP OF THE GRATE.
9. ACCESS FRAME AND COVER PER DET. P-1561

CATCH BASIN WALL THICKNESS
~~T=6" IF V=4' OR LESS~~
T=8" IF V=4' TO 8'
~~(IF V EXCEEDS 8'~~, SPECIAL DESIGN IS REQUIRED.)
L=0 UNLESS SPECIFIED ON THE PLANS
V=3'-6" MIN. WHEN L=0: 3' OR 6'
V=4'-0" MIN. WHEN L=10' OR 17'

* 4'-0" IN LOCATIONS WHERE 4' SIDEWALK IS REQ'D.

DETAIL NO.				
P-1569	CITY OF PHOENIX STANDARD DETAIL	CATCH BASIN TYPE 'M'	APPROVED [signature] CITY ENGINEER 4/28/81 DATE	DETAIL NO. P-1569

Modified

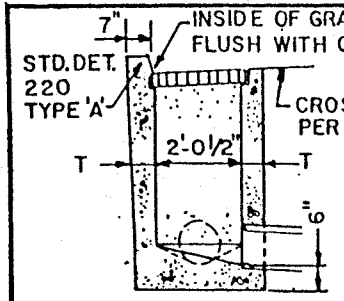

'N' CATCH BASIN IN VERTICAL CURB & GUTTER

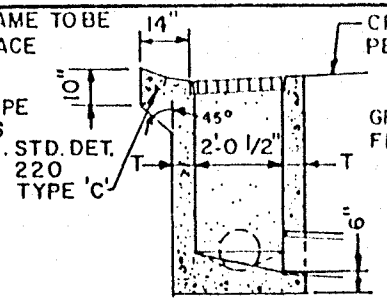

'N' CATCH BASIN IN ROLL CURB & GUTTER

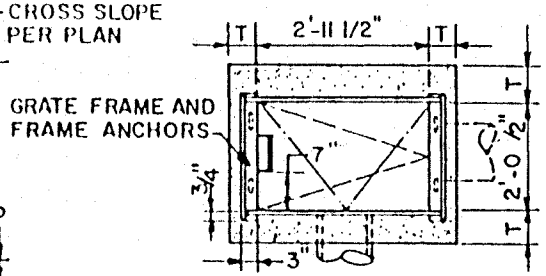

SINGLE CATCH BASIN PLAN

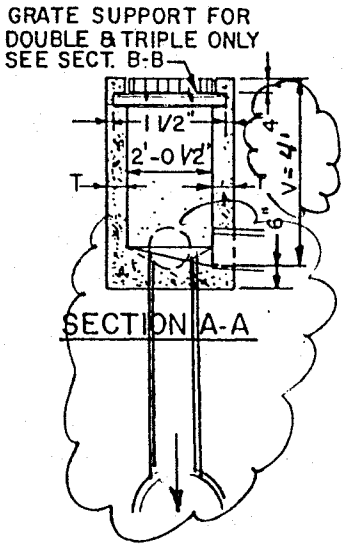

SECTION A-A

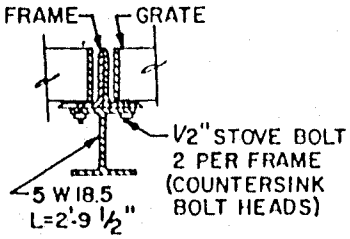

SECTION B-B

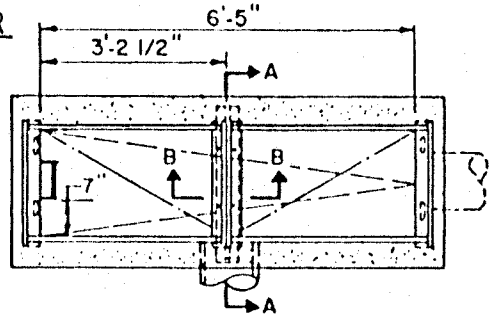

DOUBLE CATCH BASIN PLAN

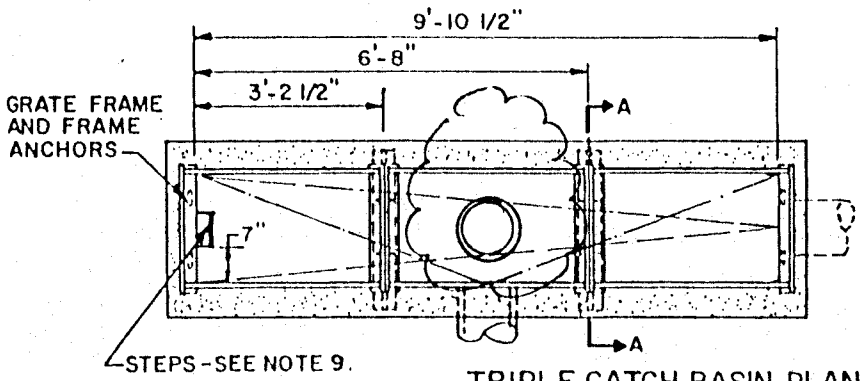

TRIPLE CATCH BASIN PLAN

NOTES

1. ALL CONCRETE SHALL BE CLASS 'A'
2. CONNECTOR PIPES MAY BE PLACED IN ANY WALL AS PER PLAN.
3. FLOOR OF BASIN SHALL BE TROWELLED TO A HARD, SMOOTH SURFACE AND SHALL SLOPE FROM ALL DIRECTIONS TO OUTLET.
4. THE CONSTRUCTION DRAINS SHALL BE INSTALLED IN ALL INLETS BUILT WITH PAVING PROJECTS. (SEE DET. P-1575).
5. CONNECTOR PIPE SHALL BE TRIMMED TO THE FINAL SHAPE AND LENGTH BEFORE CONCRETE IS POURED.
6. PLANS SHOULD SPECIFY GRATE ELEVATION AND INVERT ELEVATION.
7. THE TYPE 'N' CATCH BASIN MAY BE PREFABRICATED PROVIDING A SHOP DRAWING IS APPROVED BY THE ENGINEER PRIOR TO FABRICATION.
8. THE FRAME SHALL BE DET. P-1564, TYPE 1 AND THE GRATE SHALL BE DET P-1565, TYPE 1.
9. STEPS (M.A.G. DET. 428 POLYPROPYLENE) – V=3' (INCL), PLACE ONE STEP 12" ABOVE THE FLOOR OF THE BASIN. V OVER 3', PLACE STEPS AT 12" INTERVALS FROM THE FLOOR OF THE BASIN WITH THE TOP STEP AT 12" (MIN.) BELOW THE TOP OF THE GRATE.

CATCH BASIN WALL THICKNESS

T=6" IF V IS 4' OR LESS
T=8" IF V IS 4' TO 8'
(IF V EXCEEDS 8', SPECIAL DESIGN IS REQUIRED)
V=3'-0" UNLESS OTHERWISE NOTED.

DETAIL NO.				
P-1570	CITY OF PHOENIX STANDARD DETAIL	CATCH BASIN TYPE 'N'	APPROVED CITY ENGINEER 4/28/87 DATE	DETAIL NO. P-1570

Modified

Grovers Avenue Storm Drain Lateral

Cost Summary

Alternative	Cost	Diff.
RCP	$1,654,750	$213,933
CIPP	$1,489,982	$49,164
CBC	$1,440,817	$0
Minimum	$1,440,817	

Preliminary Construction Cost Estimate for RCP-Alternative

No.	Description	Unit	Quantity	Unit Cost	Cost
1	10x10x10 Foot Junction Structure	ea	1	$8,000	$8,000
2	12x12x16 Foot Junction Structure	ea	1	$12,000	$12,000
3	18 Inch Reinforced Concrete Connector Pipe	feet	68	$45	$3,060
4	24 Inch Reinforced Concrete Connector Pipe	feet	70	$60	$4,200
5	36 Inch Reinforced Concrete Connector Pipe	feet	202	$100	$20,200
6	24 Inch Reinforced Concrete Pipe	feet	60	$48	$2,880
7	36 Inch Reinforced Concrete Pipe	feet	18	$90	$1,620
8	42 Inch Reinforced Concrete Pipe	feet	1,114	$84	$93,580
9	48 Inch Reinforced Concrete Pipe	feet	673	$96	$64,610
10	54 Inch Reinforced Concrete Pipe	feet	35	$135	$4,730
11	60 Inch Reinforced Concrete Pipe	feet	72	$150	$10,800
12	72 Inch Reinforced Concrete Pipe	feet	34	$180	$6,120
13	84 Inch Reinforced Concrete Pipe	feet	1,410	$210	$296,100
14	108 Inch Reinforced Concrete Pipe	feet	1,245	$420	$522,900
15	54x36 Inch Pre-Fab Tee	ea	2	$500	$1,000
16	60x36 Inch Pre-Fab Tee	ea	2	$550	$1,100
17	72x36 Inch Pre-Fab Tee	ea	2	$650	$1,300
18	84x36 Inch Pre-Fab Tee	ea	2	$750	$1,500
19	108x108x60 Inch Pre-Fab Tee	ea	1	$1,500	$1,500
20	108x108x18 Inch Pre-Fab Wye	ea	2	$700	$1,400
21	8 Inch Vitrified Clay Pipe Sewer Relocation	feet	167	$18	$3,010
22	Adjust Man Hole Frame & Cover (MAG-270)	ea	7	$250	$1,750
23	Adjust Valve Box & Cover (MAG-270)	ea	2	$250	$500
24	Allowance for EXTRA Work	Job	1	$50,000	$50,000
25	Allowance for Public Information and Notification	Job	1	COP	$0
26	Allowance for Quality Control & Testing	Job	1	$50,000	$50,000
27	Catch Basin & Apron, Type N , Single (P-1570)	ea	1	$1,200	$1,200
28	Catch Basin Type M-1, L = 6 (P-1569)	ea	2	$1,500	$3,000
29	Catch Basin Type M-1, L = 10 (P-1569)	ea	1	$1,800	$1,800
30	Catch Basin Type M-1, L = 17 (P-1569)	ea	4	$2,225	$8,900
31	Catch Basin Type M-2, L = 6,17 (P-1569 Mod.)	ea	1	$2,500	$2,500
32	Catch Basin Type M-2, L = 13,17 (P-1569 Mod.)	ea	11	$2,800	$30,800
33	Catch Basin Type N , L = 28 (P-1570 Mod.)	ea	1	$4,200	$4,200
34	Catch Basin Type N , L = 36 (P-1570 Mod.)	ea	1	$5,400	$5,400
35	Catch Basin Type N , L = 42 (P-1570 Mod.)	ea	1	$6,300	$6,300
36	Channel Excavation	cu yd	620	$3.00	$1,860
37	Concrete Sewer Manhole (MAG-420 & 422)	ea	1	$2,000	$2,000
38	Concrete Sidewalk (P-1230)	sq ft	3,712	$2.00	$7,420
39	Concrete Valley Gutter & Apron	sq ft	1,290	$4.00	$5,160
40	Curb and Gutter, Type 'A', H=6" (MAG-220)	feet	285	$7.00	$2,000
41	Large Diameter Plugs (MAG-427)	ea	2	$1,000	$2,000
42	Manhole Base Transition (P-1560 & MAG-522)	ea	3	$3,500	$10,500
43	Pavement Replacement, C-3/4 x 2" Thick	sq yd	1,228	$15.00	$18,420
44	Permanent Pipe Support (MAG-403-1&2)	ea	9	$660	$5,940
45	Pipe Collar (MAG-505)	ea	44	$350	$15,400
46	Storm Drain Man Hole (P-1520 & MAG-522)	ea	7	$1,800	$12,600
47	Survey	Job	1	$30,000	$30,000
48	Survey Marker, Type 'B' (MAG-120-1)	ea	8	$150	$1,200
49	Traffic and Access Control	job	1	$30,000	$30,000
50	Uniformed Off-Duty Law Enforcement	hour	100	$21	$2,100
51	Water Line Realignment	ea	2	$2,200	$4,400
	Subtotal				$1,378,960
	Contingencies	job	20%		$275,790
	Engineer's Opinion of Construction Cost				$1,654,750

Morrison-Maierle/CSSA, Inc. 21-Mar-94

Preliminary Construction Cost Estimate for CIPP-Alternative

No.	Description	Unit	Quantity	Unit Cost	Cost
1	10x10x10 Foot Junction Structure	ea	1	$8,000	$8,000
2	12x12x16 Foot Junction Structure	ea	1	$12,000	$12,000
3	18 Inch Reinforced Concrete Connector Pipe	feet	68	$45	$3,060
4	24 Inch Reinforced Concrete Connector Pipe	feet	70	$60	$4,200
5	36 Inch Reinforced Concrete Connector Pipe	feet	202	$100	$20,200
6	24 Inch Reinforced Concrete Pipe	feet	60	$48	$2,880
7	36 Inch Reinforced Concrete Pipe	feet	18	$90	$1,620
8	48 Inch Cast In Place Concrete Pipe	feet	1,114	$108	$120,312
9	54 Inch Cast In Place Concrete Pipe	feet	673	$122	$81,770
10	54 Inch Reinforced Concrete Pipe	feet	35	$135	$4,725
11	60 Inch Reinforced Concrete Pipe	feet	72	$150	$10,800
12	72 Inch Reinforced Concrete Pipe	feet	34	$180	$6,120
13	96 Inch Cast In Place Concrete Pipe	feet	1,410	$216	$304,560
14	120 Inch Cast In Place Concrete Pipe	feet	1,245	$270	$336,150
15	54x36 Inch Pre-Fab Tee	ea	2	$500	$1,000
16	60x36 Inch Pre-Fab Tee	ea	2	$550	$1,100
17	72x36 Inch Pre-Fab Tee	ea	2	$650	$1,300
18	84x36 Inch Pre-Fab Tee	ea	2	$750	$1,500
19	108x108x60 Inch Pre-Fab Tee	ea	0	$1,500	$0
20	108x108x18 Inch Pre-Fab Wye	ea	0	$700	$0
21	8 Inch Vitrified Clay Pipe Sewer Relocation	feet	167	$18	$3,006
22	Adjust Man Hole Frame & Cover (MAG-270)	ea	7	$250	$1,750
23	Adjust Valve Box & Cover (MAG-270)	ea	2	$250	$500
24	Allowance for EXTRA Work	Job	1	$50,000	$50,000
25	Allowance for Public Information and Notification	Job	1	COP	$0
26	Allowance for Quality Control & Testing	Job	1	$50,000	$50,000
27	Catch Basin & Apron, Type N , Single (P-1570)	ea	1	$1,200	$1,200
28	Catch Basin Type M-1, L = 6 (P-1569)	ea	2	$1,500	$3,000
29	Catch Basin Type M-1, L = 10 (P-1569)	ea	1	$1,800	$1,800
30	Catch Basin Type M-1, L = 17 (P-1569)	ea	4	$2,225	$8,900
31	Catch Basin Type M-2, L = 6,17 (P-1569 Mod.)	ea	1	$2,500	$2,500
32	Catch Basin Type M-2, L = 13,17 (P-1569 Mod.)	ea	11	$2,800	$30,800
33	Catch Basin Type N , L = 28 (P-1570 Mod.)	ea	1	$4,200	$4,200
34	Catch Basin Type N , L = 36 (P-1570 Mod.)	ea	1	$5,400	$5,400
35	Catch Basin Type N , L = 42 (P-1570 Mod.)	ea	1	$6,300	$6,300
36	Channel Excavation	cu yd	620	$3.00	$1,860
37	Concrete Sewer Manhole (MAG-420 & 422)	ea	1	$2,000	$2,000
38	Concrete Sidewalk (P-1230)	sq ft	3,712	$2.00	$7,424
39	Concrete Valley Gutter & Apron	sq ft	1,290	$4.00	$5,160
40	Curb and Gutter, Type 'A', H=6" (MAG-220)	feet	285	$7.00	$1,995
41	Large Diameter Plugs (MAG-427)	ea	2	$1,000	$2,000
42	Manhole Base Transition (P-1560 & MAG-522)	ea	3	$3,500	$10,500
43	Pavement Replacement, C-3/4 x 2" Thick	sq yd	1,228	$15.00	$18,420
44	Permanent Pipe Support (MAG-403-1&2)	ea	9	$660	$5,940
45	Pipe Collar (MAG-505)	ea	44	$350	$15,400
46	Storm Drain Man Hole (P-1520 & MAG-522)	ea	7	$1,800	$12,600
47	Survey	Job	1	$30,000	$30,000
48	Survey Marker, Type 'B' (MAG-120-1)	ea	8	$150	$1,200
49	Traffic and Access Control	job	1	$30,000	$30,000
50	Uniformed Off-Duty Law Enforcement	hour	100	$21	$2,100
51	Water Line Realignment	ea	2	$2,200	$4,400
	Subtotal				$1,241,652
	Contingencies	job	20%		$248,330
	Engineer's Opinion of Construction Cost				$1,489,982

Morrison-Maierle/CSSA, Inc. 21-Mar-94

Preliminary Construction Cost Estimate for CBC-Alternative

No.	Description	Unit	Quantity	Unit Cost	Cost
1	10x10x10 Foot Junction Structure	ea	0	$8,000	$0
2	12x12x16 Foot Junction Structure	ea	1	$12,000	$12,000
3	18 Inch Reinforced Concrete Connector Pipe	feet	68	$45	$3,060
4	24 Inch Reinforced Concrete Connector Pipe	feet	70	$60	$4,200
5	36 Inch Reinforced Concrete Connector Pipe	feet	202	$100	$20,200
6	24 Inch Reinforced Concrete Pipe	feet	60	$48	$2,880
7	36 Inch Reinforced Concrete Pipe	feet	18	$90	$1,620
8	42 Inch Reinforced Concrete Pipe	feet	1,114	$84	$93,576
9	48 Inch Reinforced Concrete Pipe	feet	673	$96	$64,608
10	54 Inch Reinforced Concrete Pipe	feet	35	$135	$4,725
11	60 Inch Reinforced Concrete Pipe	feet	72	$150	$10,800
12	72 Inch Reinforced Concrete Pipe	feet	34	$180	$6,120
13	84 Inch Reinforced Concrete Pipe	feet	1,410	$210	$296,100
14	8' x 8' Concrete Box Conduit	feet	1,245	$284	$354,133
15	54x36 Inch Pre-Fab Tee	ea	2	$500	$1,000
16	60x36 Inch Pre-Fab Tee	ea	2	$550	$1,100
17	72x36 Inch Pre-Fab Tee	ea	2	$650	$1,300
18	84x36 Inch Pre-Fab Tee	ea	2	$750	$1,500
19	108x108x60 Inch Pre-Fab Tee	ea	0	$1,500	$0
20	18" Spur Connection to 8'x8' CBC	ea	2	$700	$1,400
21	8 Inch Vitrified Clay Pipe Sewer Relocation	feet	167	$18	$3,006
22	Adjust Man Hole Frame & Cover (MAG-270)	ea	7	$250	$1,750
23	Adjust Valve Box & Cover (MAG-270)	ea	2	$250	$500
24	Allowance for EXTRA Work	Job	1	$50,000	$50,000
25	Allowance for Public Information and Notification	Job	1	COP	$0
26	Allowance for Quality Control & Testing	Job	1	$50,000	$50,000
27	Catch Basin & Apron, Type N , Single (P-1570)	ea	1	$1,200	$1,200
28	Catch Basin Type M-1, L = 6 (P-1569)	ea	2	$1,500	$3,000
29	Catch Basin Type M-1, L = 10 (P-1569)	ea	1	$1,800	$1,800
30	Catch Basin Type M-1, L = 17 (P-1569)	ea	4	$2,225	$8,900
31	Catch Basin Type M-2, L = 6,17 (P-1569 Mod.)	ea	1	$2,500	$2,500
32	Catch Basin Type M-2, L = 13,17 (P-1569 Mod.)	ea	11	$2,800	$30,800
33	Catch Basin Type N , L = 28 (P-1570 Mod.)	ea	1	$4,200	$4,200
34	Catch Basin Type N , L = 36 (P-1570 Mod.)	ea	1	$5,400	$5,400
35	Catch Basin Type N , L = 42 (P-1570 Mod.)	ea	1	$6,300	$6,300
36	Channel Excavation	cu yd	620	$3.00	$1,860
37	Concrete Sewer Manhole (MAG-420 & 422)	ea	1	$2,000	$2,000
38	Concrete Sidewalk (P-1230)	sq ft	3,712	$2.00	$7,424
39	Concrete Valley Gutter & Apron	sq ft	1,290	$4.00	$5,160
40	Curb and Gutter, Type 'A', H=6" (MAG-220)	feet	285	$7.00	$1,995
41	Large Diameter Plugs (MAG-427)	ea	2	$1,000	$2,000
42	Manhole Base Transition (P-1560 & MAG-522)	ea	3	$3,500	$10,500
43	Pavement Replacement, C-3/4 x 2" Thick	sq yd	1,228	$15.00	$18,420
44	Permanent Pipe Support (MAG-403-1&2)	ea	9	$660	$5,940
45	Pipe Collar (MAG-505)	ea	44	$350	$15,400
46	Storm Drain Man Hole (P-1520 & MAG-522)	ea	7	$1,800	$12,600
47	Survey	Job	1	$30,000	$30,000
48	Survey Marker, Type 'B' (MAG-120-1)	ea	8	$150	$1,200
49	Traffic and Access Control	job	1	$30,000	$30,000
50	Uniformed Off-Duty Law Enforcement	hour	100	$21	$2,100
51	Water Line Realignment	ea	2	$2,200	$4,400
	Subtotal				$1,200,677
	Contingencies	job	20%		$240,140
	Engineer's Opinion of Construction Cost				$1,440,817

Morrison-Maierle/CSSA, Inc. 21-Mar-94

Morrison Maierle/CSSA INC.

An Arizona Corporation

ENGINEERS
PLANNERS
SURVEYORS

4621 North 16th Street
Suite D-401
Phoenix, Arizona 85016
Phone: 602/277-2828

March 9, 1994

Mr. Michael Lopez, P.E.
Planning & Project Management Division
Flood Control District of Maricopa County
2801 West Durango
Phoenix, Arizona 85009

RE: INLET ALTERNATIVES AT 28TH STREET
Grovers Avenue Storm Drain Lateral
Cave Creek Road to 32nd Street
Project No. 93-21
MM/CSSA Job No. 8156.001

Dear Mr. Lopez:

We have completed our evaluation of three different inlet alternatives that will intercept the incoming design flow of 245 cubic feet per second at the 28th Street and Grovers Avenue intersection. Attached herewith for your use are the geometric configurations and construction cost estimates for these three alternates.

Alternate 1 uses a grated inlet in sump condition between the curb returns to capture the flow-by from the upstream on-grade drop inlets. Alternate 2 uses drop inlets in sump condition to capture the flow-by. And, Alternate 3 uses drop inlets on-grade to intercept all of the flow.

We recommend that Alternate No. 1 be selected for use on this project for the following reasons:

1. Alternate 1 is the least expensive alternate and can be constructed in less time than Alternates 2 and 3. The probable construction costs including the junction structure are as follows:

Alternate 1	$153,240
Alternate 2	$176,640
Alternate 3	$185,030

2. Constructing Alternates 2 and 3 will require closing the school drop-off area.

3. Alternates 2 and 3 have more pipes that could conflict with future utilities.

If you have any questions or wish to discuss these alternates in more detail please call me.

Sincerely,

MORRISON-MAIERLE/CSSA, INC.

Bruce J. Friedhoff, P.E.
Office Manager

f:\8156001\lopez.L09

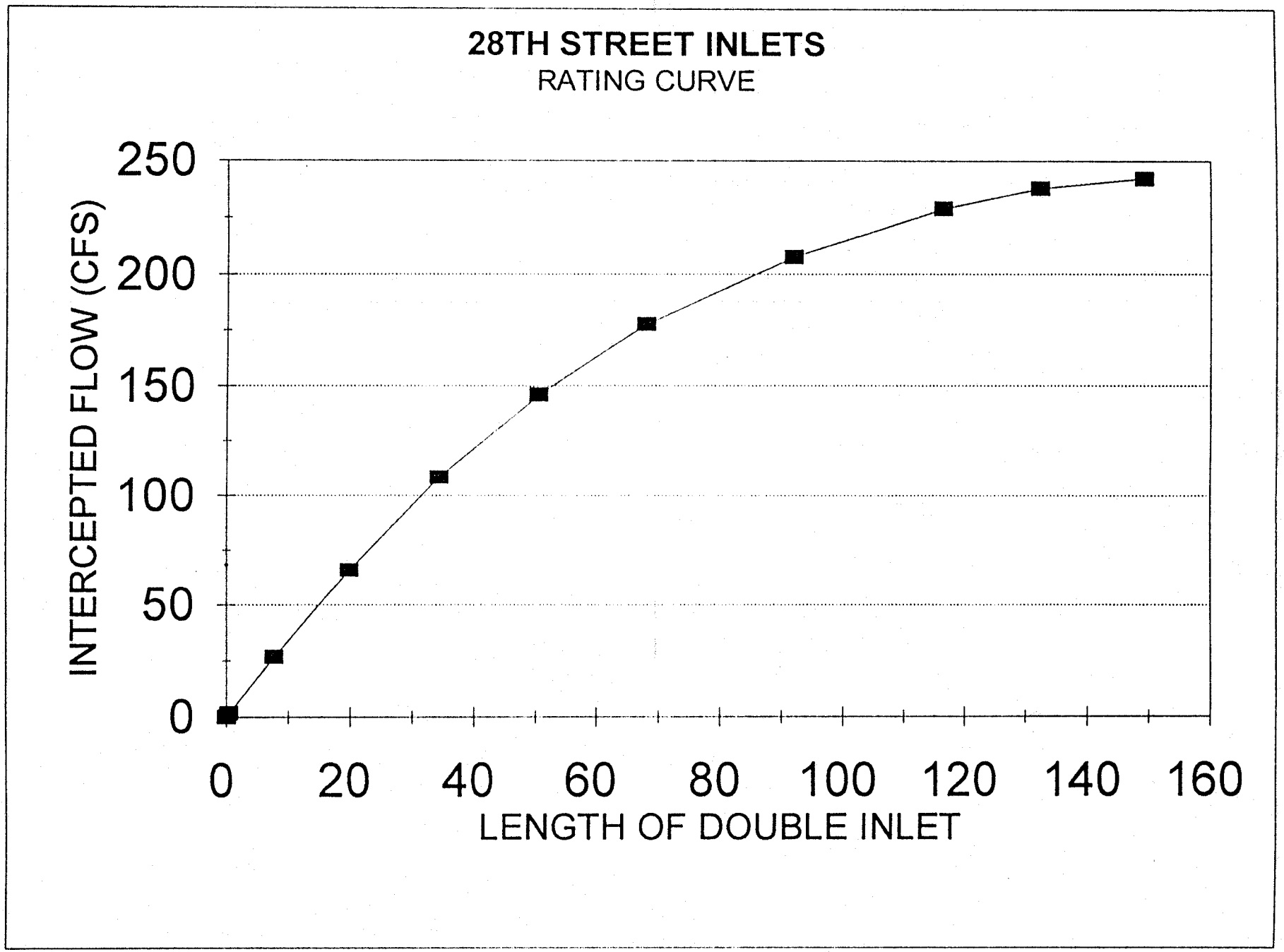
28TH STREET INLETS
RATING CURVE
INTERCEPTED FLOW (CFS)
250
200
150
100
50
0
0
20
40
60
80
100
120
140
160
LENGTH OF DOUBLE INLET

ALTERNATE NO. 1

28TH STREET INLETS

DESIGN FLOW = 245 CFS

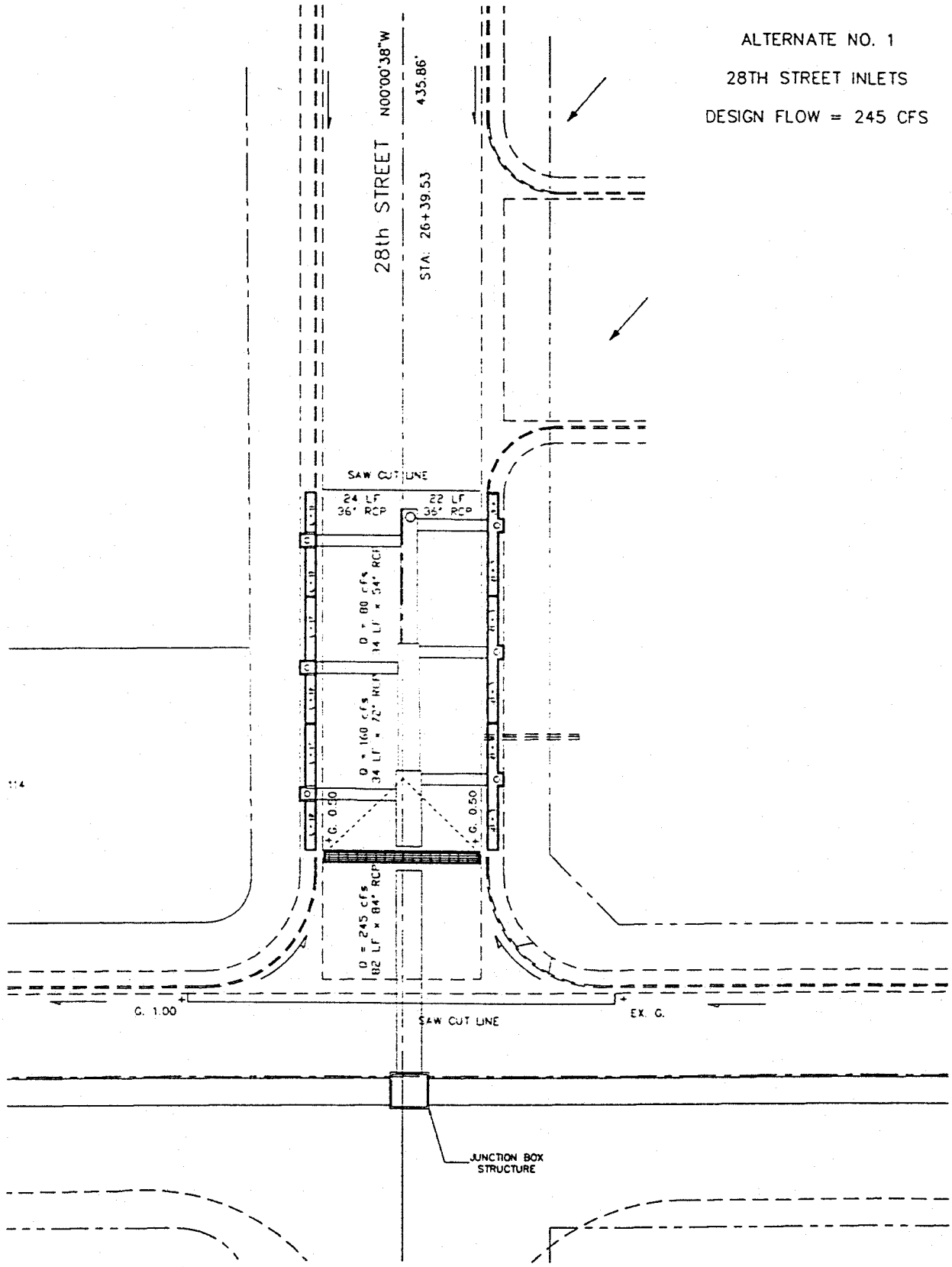

28th Street Inlets - Alternate No. 1 Construction Cost Estimate

No.	Description	Unit	Quantit	Unit Cost	Cost
1	30 Inch Corrugated Metal Pipe	feet	0	$45	$0
2	36 Inch Reinforced Concrete Pipe	feet	138	$90	$12,420
3	54 Inch Reinforced Concrete Pipe	feet	34	$135	$4,590
4	72 Inch Reinforced Concrete Pipe	feet	34	$180	$6,120
5	84 Inch Reinforced Concrete Pipe	feet	82	$210	$17,220
6	54x36 Inch Pre-Fab Tee	ea	2	$1,400	$2,800
7	72x36 Inch Pre-Fab Tee	ea	2	$1,600	$3,200
8	84x36 Inch Pre-Fab Tee	ea	2	$2,000	$4,000
9	48 Inch Man Hole Shaft (MAG 420)	ea	1	$1,500	$1,500
10	10x10x10 Foot Junction Structure	ea	1	$12,000	$12,000
11	Catch Basin Type M-2, L = 13,17 (P-1569 Mod.)	ea	5	$4,500	$22,500
12	Catch Basin Type M-2, L = 6,17 (P-1569 Mod.)	ea	1	$3,500	$3,500
13	Slotted Drain, 30" CMP	lf	0	$90	$0
14	Catch Basin Type N , L = 36 (P-1570 Mod.)	ea	1	$9,000	$9,000
15	Pipe Collar (MAG-505)	ea	1	$350	$350
16	Large Diameter Plugs (MAG-427)	ea	1	$1,000	$1,000
17	Curb and Gutter, Type 'A', H=6" (MAG-220)	feet	304	$5.50	$1,670
18	Concrete Sidewalk (P-1230)	sq ft	1,216	$2.50	$3,040
19	Pavement Replacement, C-3/4 x 2" Thick	sq yd	734	$24.00	$17,630
20	Concrete Valley Gutter & Apron	sq ft	740	$4.00	$2,960
21	Water Line Realignment	ea	1	$2,200	$2,200
	Subtotal				$127,700
	Contingencies	job	20%		$25,540
	Engineer's Opinion of Construction Cost				$153,240

ALTERNATE NO. 2

28TH STREET INLETS

DESIGN FLOW = 245 CFS

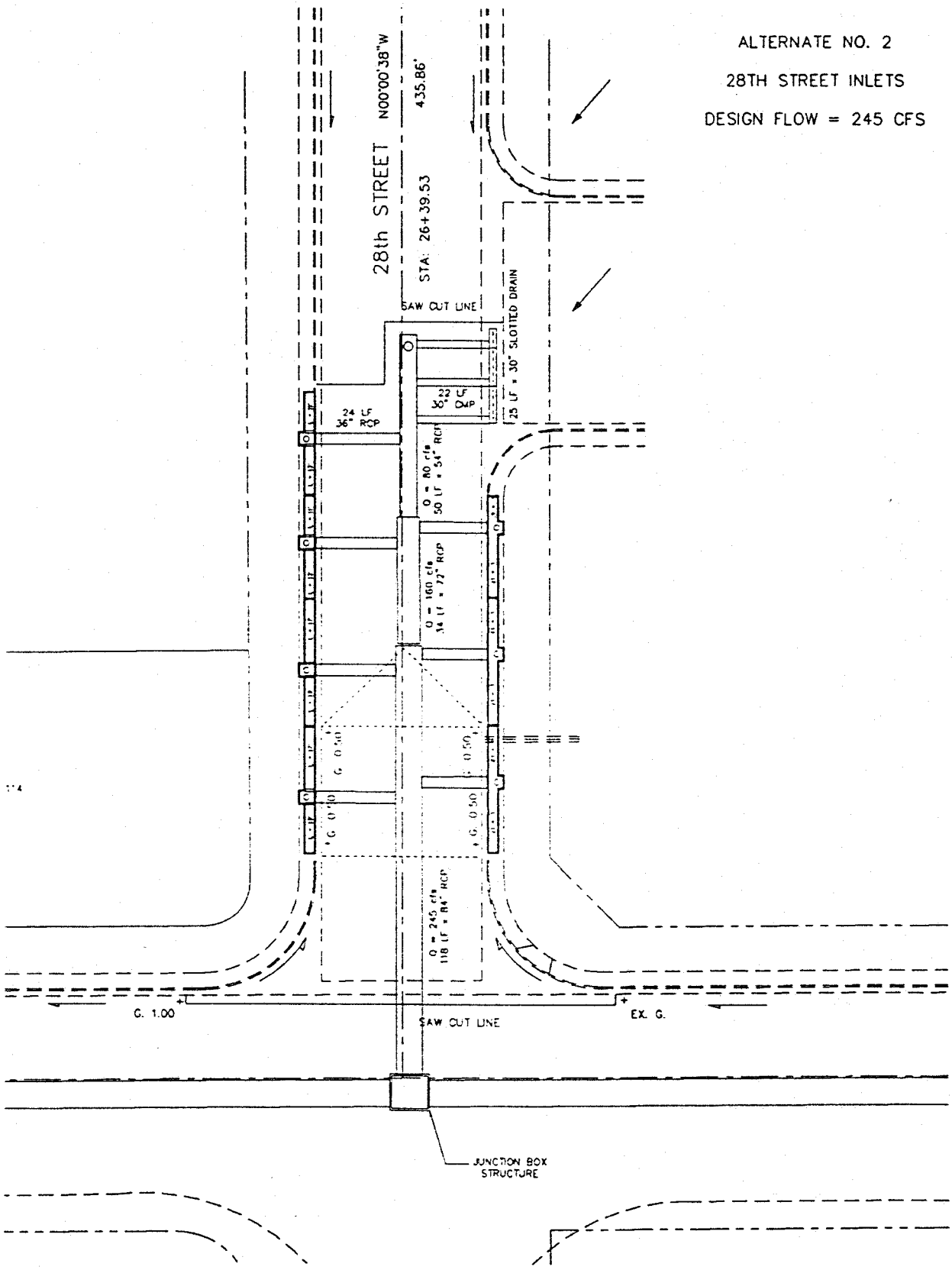

28th Street Inlets - Alternate No. 2 Construction Cost Estimate

No.	Description	Unit	Quantity	Unit Cost	Cost
1	30 Inch Corrugated Metal Pipe	feet	66	$45	$2,970
2	36 Inch Reinforced Concrete Pipe	feet	162	$90	$14,580
3	54 Inch Reinforced Concrete Pipe	feet	50	$135	$6,750
4	72 Inch Reinforced Concrete Pipe	feet	34	$180	$6,120
5	84 Inch Reinforced Concrete Pipe	feet	118	$210	$24,780
6	54x36 Inch Pre-Fab Tee	ea	1	$1,400	$1,400
7	72x36 Inch Pre-Fab Tee	ea	2	$1,600	$3,200
8	84x36 Inch Pre-Fab Tee	ea	4	$2,000	$8,000
9	48 Inch Man Hole Shaft (MAG 420)	ea	1	$1,500	$1,500
10	10x10x10 Foot Junction Structure	ea	1	$12,000	$12,000
11	Catch Basin Type M-2, L = 13,17 (P-1569 Mod.)	ea	6	$4,500	$27,000
12	Catch Basin Type M-2, L = 6,17 (P-1569 Mod.)	ea	1	$3,500	$3,500
13	Slotted Drain, 30" CMP	lf	25	$90	$2,250
14	Catch Basin Type N , L = 36 (P-1570 Mod.)	ea	0	$9,000	$0
15	Pipe Collar (MAG-505)	ea	1	$350	$350
16	Large Diameter Plugs (MAG-427)	ea	1	$1,000	$1,000
17	Curb and Gutter, Type 'A', H=6" (MAG-220)	feet	334	$5.50	$1,840
18	Concrete Sidewalk (P-1230)	sq ft	1,336	$2.50	$3,340
19	Pavement Replacement, C-3/4 x 2" Thick	sq yd	959	$24.00	$23,010
20	Concrete Valley Gutter & Apron	sq ft	903	$4.00	$3,610
	Subtotal				$147,200
	Contingencies	job	20%		$29,440
	Engineer's Opinion of Construction Cost				$176,640

ALTERNATE NO. 3

28TH STREET INLETS

DESIGN FLOW = 245 CFS

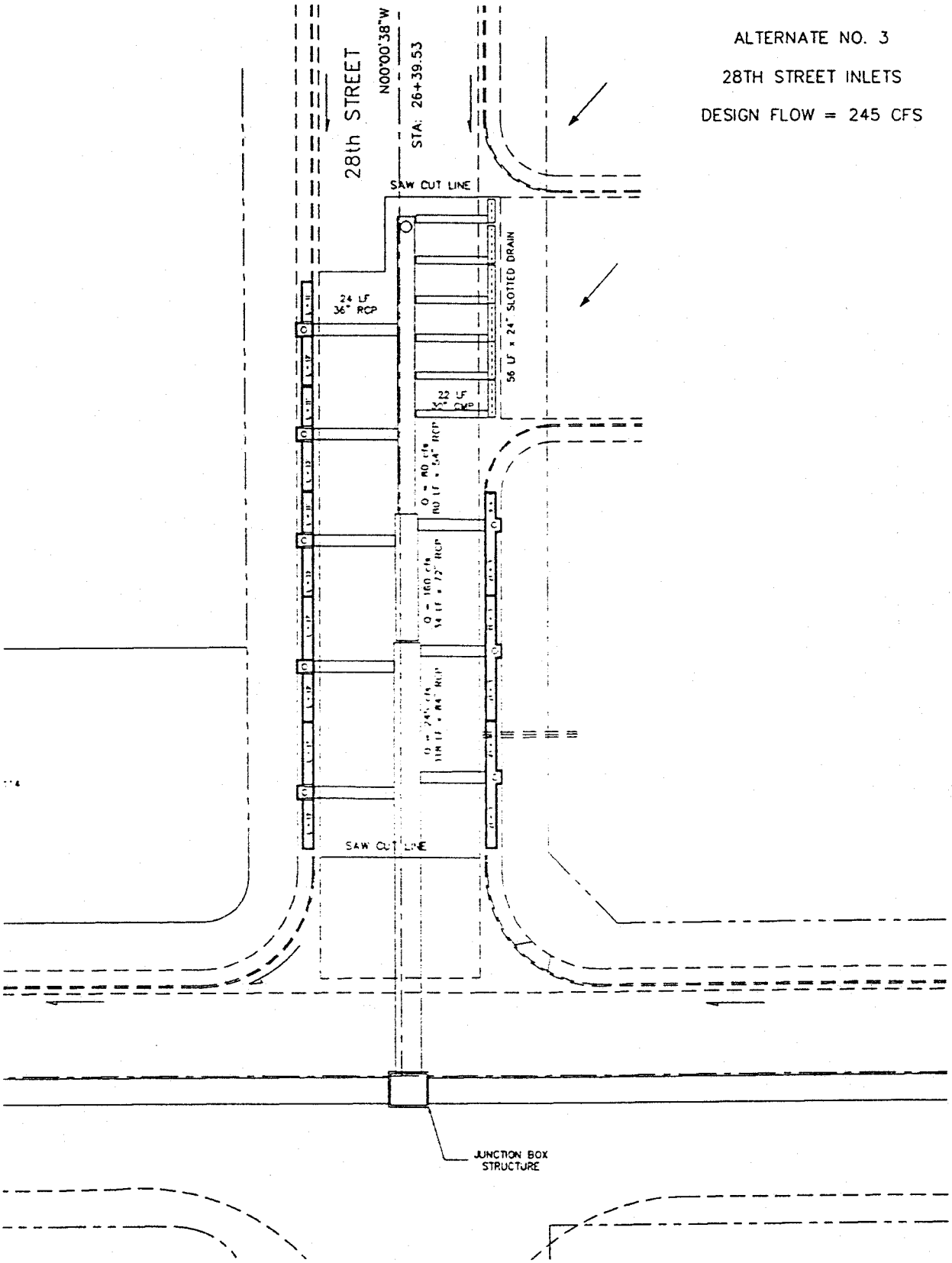

28th Street Inlets - Alternate No. 3 Construction Cost Estimate

No.	Description	Unit	Quantit	Unit Cost	Cost
1	30 Inch Corrugated Metal Pipe	feet	132	$45	$5,940
2	36 Inch Reinforced Concrete Pipe	feet	138	$90	$12,420
3	54 Inch Reinforced Concrete Pipe	feet	80	$135	$10,800
4	72 Inch Reinforced Concrete Pipe	feet	34	$180	$6,120
5	84 Inch Reinforced Concrete Pipe	feet	118	$210	$24,780
6	54x36 Inch Pre-Fab Tee	ea	2	$1,400	$2,800
7	72x36 Inch Pre-Fab Tee	ea	2	$1,600	$3,200
8	84x36 Inch Pre-Fab Tee	ea	4	$2,000	$8,000
9	48 Inch Man Hole Shaft (MAG 420)	ea	1	$1,500	$1,500
10	10x10x10 Foot Junction Structure	ea	1	$12,000	$12,000
11	Catch Basin Type M-2, L = 13,17 (P-1569 Mod.)	ea	7	$4,500	$31,500
12	Catch Basin Type M-2, L = 6,17 (P-1569 Mod.)	ea	1	$3,500	$3,500
13	Slotted Drain, 30" CMP	lf	56	$90	$5,040
14	Catch Basin Type N , L = 36 (P-1570 Mod.)	ea	0	$9,000	$0
15	Pipe Collar (MAG-505)	ea	1	$350	$350
16	Large Diameter Plugs (MAG-427)	ea	1	$1,000	$1,000
17	Curb and Gutter, Type 'A', H=6" (MAG-220)	feet	249	$5.50	$1,370
18	Concrete Sidewalk (P-1230)	sq ft	996	$2.50	$2,490
19	Pavement Replacement, C-3/4 x 2" Thick	sq yd	832	$24.00	$19,960
20	Concrete Valley Gutter & Apron	sq ft	355	$4.00	$1,420
	Subtotal				$154,190
	Contingencies	job	20%		$30,840
	Engineer's Opinion of Construction Cost				$185,030

Morrison-Maierle/CSSA, Inc. 08-Mar-94

QUANTITY TAKE-OFF FOR ENGINEER'S COST ESTIMATE

GROVER AVENUE STORM DRAIN LATERAL
FLOOD CONTROL DISTRICT OF MARICOPA COUNTY
FCD #93-21

May 15, 1995

ITEM NO.	DESCRIPTION	UNIT	SHEETS 5	6	7	8	9	10	11	12	13	14	15	16	17	18	19	20	21	22	QTY.
1	10x10x8 Ft. Junction Structure	EA						1													1
2	12x12x15 Ft. Junction Structure	EA	1																		1
3	12x12x9 Ft. Junction Structure	EA			1																1
4	24 Inch Connector Pipe	FT	57		45	21	25	31		58	31	80	216	34	93						691
5	36 Inch Connector Pipe	FT										40	44								84
6	24 Inch Pipe	FT												59							59
7	42 Inch Pipe	FT							107	500	441										1,048
8	48 Inch Pipe	FT						254	393						139						786
9	60 Inch Pipe	FT										141	144								285
10	84 Inch Pipe	FT			102	500	500	246					158								1,506
11	8 Ft. x 8 Ft. Concrete Box Conduit	FT	329	500	398																1,227
12	42 x 24 Inch Pre-Fab Tee	EA								2	1										3
13	48 x 24 Inch Pre-Fab Tee	EA						1							5						6
14	60 x 24 Inch Pre-Fab Tee	EA										4	2								6
15	60 x 36 Inch Pre-Fab Tee	EA										2	2								4
16	84 x 24 Inch Pre-Fab Tee	EA			1	1	1						6								9
17	8 Inch Vitrified Clay Pipe Sewer Relocation	FT														147					147
18	Adjust Valve Box & Cover (MAG 270)	EA																1		5	6
19	Concrete Pipe Collars, 24" & Larger	EA		1	1	1	1	1		2	1	3	2	1	3						17
20	Subgrade Preparation	SY															555	1,312	436	1,430	3,733
21	Remove and Replace Hydrant	EA	1																		1
22	Catch Basin, Type N, Single (P-1570)	EA	1					1		1	1		1								5
23	Catch Basin Type M-1, L = 6 (P-1569 Mod.)	EA												2							2
24	Catch Basin Type M-1, L = 10 (P-1569 Std.)	EA	1		1																2
25	Catch Basin Type M-1, L = 17 (P-1569 Std.)	EA	1																		1
26	Catch Basin Type M-1, L = 6 (P-1569 Std.)	EA			1	1	1			1											4
27	Catch Basin Type M-2, L = 13, 17 (P-1569 Mod.)	EA										6	9		6						21
28	Catch Basin Type M-2, L = 13, 10 (P-1569 Mod.)	EA											1								1
29	Concrete Sewer Manhole (MAG 420 & 422)	EA														2					2
30	Concrete Sidewalk (P-1230)	SF															1,490	1,800	1,350	1,050	5,690
31	Curb and gutter, Type "A", H = 6 in. (MAG 220)	FT															282	455	272	279	1,288
32	Large Diameter Plugs (MAG 427)	EA									1	1	1								3
33	Manhole Base (P-1560 & MAG 522)	EA					1					1	1								3
34	Storm Drain Manhole (P-1520 & MAG 522)	EA							1	1	1			1	1						5
35	Permanent Pavement Replacement	SY			294	630	630	525	325		38	16	21	40	16		555	1,312	436	828	5,666
36	Seal Coat	SY															555	1,312	436	828	3,131
37	Survey Marker, Type "B" (MAG 120-1)	EA	1		1		1	1	1	1	1									1	8
38	Survey Marker, Type "A" (MAG 120-1)	EA						1													1
39	Traffic and Access Control	LS																			1
40	Water Line Relocate Cross Tie (Station 13+05)	LS			1																1
41	DIP Permanent Water Pipe (403-3)	EA	1	1			1	2		1		1	1	2	1						11
42	SS Optional Pipe Support (MAG 403-1, 2, 3)	EA					3	1		4	1	1	1	2							13
43	8 Inch DIP Water Replacement Pipe	FT											166								166
44	8 Inch DIP Sanitary Sewer Replacement Pipe	FT										90			90						180
45	Realign Ditch	FT		490																344	834
46	Concrete Curb (MAG 222-B)	FT															225		240		465
47	5 Ft. Curb Transition (MAG 221)	EA																	2		2
48	Modify Existing Sanitary Sewer Manhole	EA														1					1
49	Valley Gutter Replacement	SF												10							10
50	Concrete Driveway Replacement	SF																		280	280
51	8 Inch DIP Sanitary Sewer Relocation	LF														42					42
52	Miscellaneous Removal and Other Work	LS																			1
53	Saw Cut AC and PCC	FT															80	162	52	57	331
54	Remove Concrete Curb and Gutter	FT															268	455	268	279	1,270
55	Remove Concrete Sidewalk, Driveway, Valley, Gutter and Apron	SF															1,100	2,320	1,360	1,570	6,350
56	Remove Pipe Backfill and Compact 30 in. and over	FT																		10	10
57	Remove Asphalt Pavement	SY															555	1,312	436	828	3,131
58	Remove Headwall and Catch Basin, Backfill and Compact	EA																		1	1
59	Remove Existing Manhole	EA														2					2
60	Remove Pipe, Backfill and Compact 24 in. and under	FT														25					25
61	Allowance for EXTRA Work	LS																			1

Morrison Maierle/CSSA
Since 1945

ENGINEERS
PLANNERS
SURVEYORS

2020 Grand Avenue
Billings, MT 59102
Phone: (406) 656-6000

MARICOPA COUNTY FLOOD CONTROL DISTRICT
GROVERS AVENUE STORM DRAIN LATERAL
CAVE CREEK ROAD TO 30TH WAY
PROJECT NO. 93-21

STRUCTURAL DESIGN COMPUTATIONS

TABLE OF CONTENTS

SUBJECT	PAGES
STRUCTURAL DESIGN	1-14
GEOTECH REPORT (SPEEDIE & ASSOC.)	SECT G

Registered Professional Engineer (Structural)
CERTIFICATE NO. 22240
PHILLIP C. GREEN
Date Signed 11/22/94
ARIZONA, U.S.A.

Phillip C. Green, P.E.

WATER • WASTEWATER • TRANSPORTATION • AIRPORTS • STRUCTURES • WATER RESOURCES • PHOTOGRAMMETRY • CONSTRUCTION ENGINEERING

Morrison Maierle/CSSA	PROJECT: MARICOPA CO - GRUNERS AVE STORM DRAIN		
	BY: GREEN	DATE 8/24/09	PROJ. NO. 8156.001
	CHK:	DATE	PAGE: 1 OF 14

JUNCTION STRUCTURE @ STA. 0+71.00

LIMITED SOILS DATA

STIFF TO HARD SILTY CLAYS & SANDY CLAYS

$\gamma = 116$ PCF w/ 5% MOISTURE

USE EFP = 75 PSF/FT. ←

CONCRETE JUNCT. BOX

$F_c' = 4.0$ KSI.

$F_y = 60$ KSI.

EFP = 75 PSF/FT.

2' SURCHARGE FOR VEHICLE LOAD

EARTH COVER DEPTH = 9.0' ±

TYP. WALL LOADING

$P_{TOP} = 75(2.0 + 9.0 + 1.0)$

$= 75(12.0) = 900$ PSF

$P_{BOT} = 75(2.0 + 9.0 + 16.0)$

$= 75(27.0) = 2025$ PSF

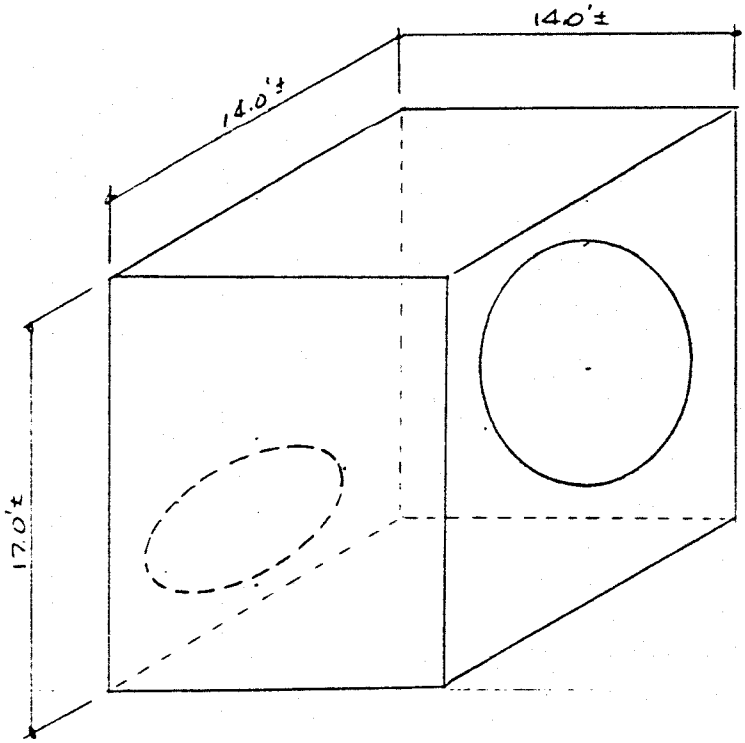

JUNCTION STRUCTURE @ STA. 0+71.00

TYP. WALL w/o PENETRATION

CHECK SHEAR AT BASE OF WALL

USE SIMPLE SUPPORT AT ALL EDGES

$p_1 = 900$ PSF. $\quad V_x = 0.420(900)(15.0) = 5670^{\#/'}$

$p_2 = 1125$ PSF $\quad V_x = 0.294(1125)(15.0) = \underline{4961}$

$V = 5.67 + 4.96 = 10.6^{K/'}$

$V_u = 1.7(10.6) = 18.1^{K/'}$

$\phi V_c = 4\phi\sqrt{f'_c} = 4(0.85)\frac{\sqrt{4000}}{1000} = 0.215$ KSI. @ MAX. STRESS LOCATION

$d \geq \frac{18.1}{12(0.215)} = 7.0'' \quad < \quad d = \frac{1}{2}(9.5 + 8.375) = 8.94''$ ∴ OK.

LAT. EARTH LOADS ARE CONSERVATIVE ∴ SHOULD BE O.K.

TEL. CONV. w/ B. FRIEDHOFF

USE WTRSTOP AT BASE

∴ INCREASE WALL THICK. TO 10"

JUNCTION STRUCTURE @ STA. 0+71.00

TYP. WALL W/O PENETRATION

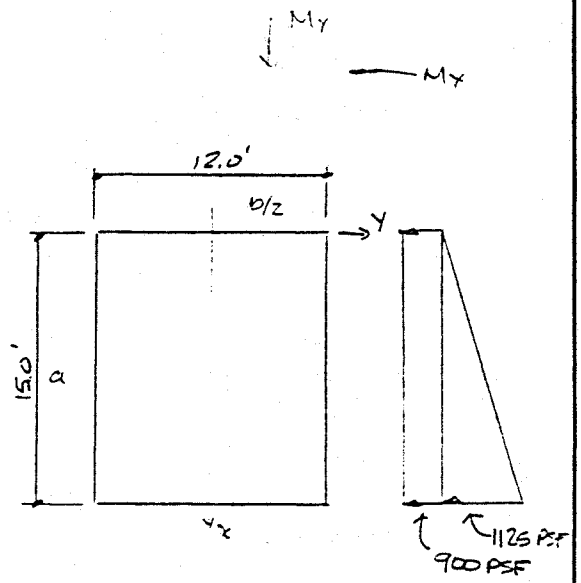

WIDTH $b = 12.0'$
HT $a = 15.0'$

HINGED EDGES

$p_1 = 900$ PSF

$p_2 = 2025 - 900 = 1125$ PSF.

$b/a = 12.0/15.0 = 0.80$ USE $b/a = 1.0$

REF. TIMOSHENKO – TABLES

$x = 0.5a \quad y = 0$ MID-HT, MID-SPAN

$M_x \cong 0.0239\,(15.0)^2(0.900) + 0.024\,(15.0)^2(1.125) = 10.9^{\text{'-k/'}}$ (VERT. REINF.)

$M_y \cong 0.050(15.0)^2(0.900) + 0.025\,(15.0)^2(1.125) = 16.5^{\text{'-k/'}}$ (HORZ. REINF.)

$M_u = 1.7\,M$

HORZ. REINF.

$M_u = 1.7\,(16.5) = 28.1^{\text{'-k/'}}$

$t = 14''$ $\quad d = 14 - 2 - 1/2 = 11.5''$ $\quad F = 0.132$ $\quad K_u = 213$ $\quad a_n = 4.32$

$A_{s\,req} \geq \dfrac{28.1}{4.32\,(11.5)} = 0.57$ IN²/FT $\quad$ #5@6" o.c. / #6@9" o.c. ⟷ *

VERT. REINF.

$M_u = 1.7\,(10.9) = 18.5^{\text{'-k/'}}$

$t = 14''$ $\quad d = 14 - 2 - 3/4 - 3/8 = 10.875''$ $\quad F = 0.118$ $\quad K_u = 156$ $\quad a_n = 4.38$

$A_{s\,req} \geq \dfrac{18.5}{4.38\,(10.875)} = 0.39$ IN²/FT. $\quad$ #5@9" o.c. / #6@12" o.c. ⟷ *

JUNCTION STRUCTURE @ STA. 0+71.00

WALL w/ ARCH CULVERT

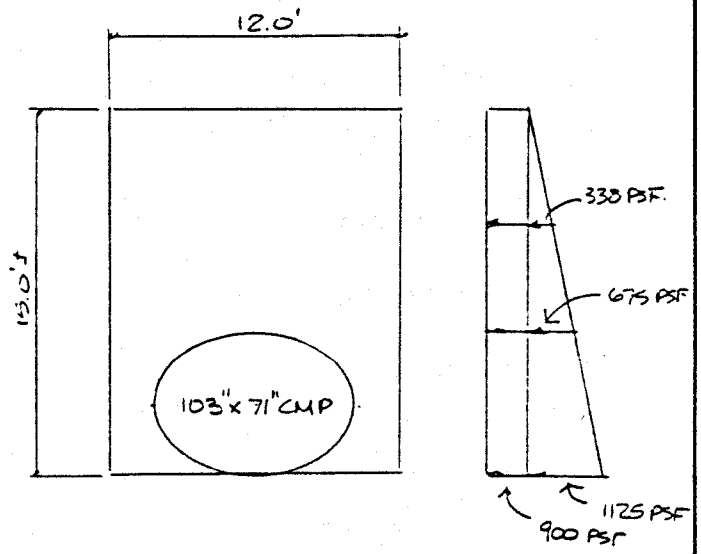

AT TOP OF CMP

$p_2 = \left(\frac{1125}{15.0}\right)(15.0 - 6.0) = 675$ PSF

CONSIDER UNIT WIDTH STRIP

$w = 900 + 675 = 1575$ PSF

HINGED ENDS

$M_\varepsilon = 1/8(1.575)(12.0)^2 = 28.4$ '-K/'

FIXED ENDS

$M_\varepsilon = \frac{1}{24}(1.575)(12.0)^2 = 9.5$ '-K/'

$M_{wall} = \frac{1}{12}(1.575)(12.0)^2 = 18.9$ '-K/'

SAY 50% FIXITY FOR MID-SPAN DESIGN

$M_\varepsilon = 28.4 - 0.5(18.9) = 19.0$ '-K/'

$M_u = 1.7(19.0) = 32.3$ '-K/'

$t = 14''$ $d = 11.5$ $F = 0.132$ $K_u = 245$ $a_n = 4.31$

$A_{s60} \geq \frac{32.3}{4.31\,(11.5)} = 0.65$ IN²/FT. $\#6_{60} @ 8''$ o.c. $\#5_{60} @ 6''$ o.c. ⟵ *

AT WALL

$M = 0.60(18.9) = 11.3$ '-K/'

$M_u = 1.7(11.3) = 19.2$ '-K/'

$t = 14$ $d = 11.5''$ $F = 0.132$ $K_u = 145$ $a_n = 4.30$

$A_{s60} \geq \frac{19.2}{4.38\,(11.5)} = 0.38$ IN²/FT. $\#6_{60} @ 13''$ o.c. $\#5_{60} @ 10''$ o.c. $\#4_{60} @ 6''$ o.c. ⟵ *

JUNCTION STRUCTURE @ STA. 0+71.00

WALL w/ ARCH CULVERT

MID-HT ABOVE CULVERT

$p_2 = \left(\frac{1125}{15.0}\right)(4.5) = 338$ PSF.

CONSIDER UNIT WIDTH STRIP $w = 900 + 338 = 1238$ PSF.

BY COMPARISON, DESIGN MOMENTS ARE $\frac{1238}{1575} = 0.79$ (80%) OF UNR STRIP

Morrison Maierle/CSSA	PROJECT: MARICOPA CO. - GROVERS AVE. STORM DRAIN		
	BY: GREEN	DATE 3/21/94	PROJ. NO. 8156.001
	CHK:	DATE	PAGE 5 OF 14

JUNCTION STRUCTURE @ STA. 0+71.00

WALL w/ BOX CULVERT

UNIT WIDTH VERT. STRIP AT BOTTOM

SAY $w = 900 + 1125 = 2025$ PSF.

$M_{CANT} = 1/2\,(2.025)(3.0)^2 = 9.1^{1-K}$

$M_u = 1.7\,(9.1) = 15.5^{1-K}$

$t = 14''$ $\quad d = 14 - 2 - 3/4 - 3/8 = 10.875''$

$F = 0.118$ $\quad K_u = 131$ $\quad a_n = 4.38$

$A_{s60} \geq \dfrac{15.5}{4.38\,(10.875)} = 0.32\ \text{IN.}^2/\text{FT.}$

#6 @ 12" o.c.
#5 @ 12" o.c.
#4 @ 7 1/2" o.c.

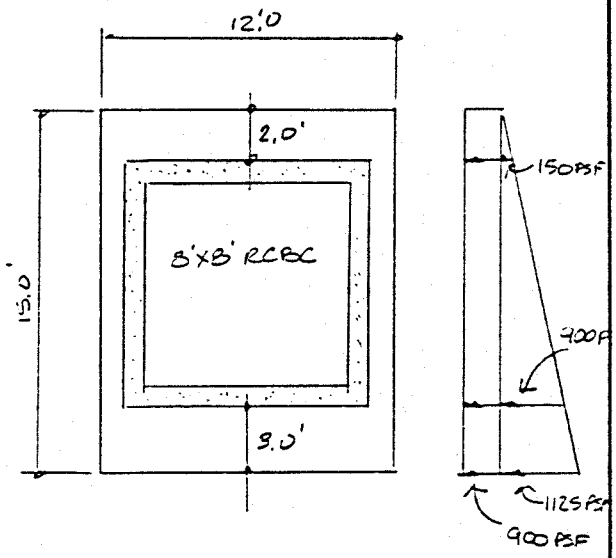

JUNCTION BOX @ STA 0+71.00

ROOF SLAB

NEGLECT WT. OF ACCESS MANHOLE
USE WT. OF EARTH COVER OVER ENTIRE ROOF SLAB

D.L. = 0.120 (3.0) + 0.150 (1.0) = 1.23 KSF.
L.L. = 0.250 KSF.

$W_U = 1.4(1.23) + 1.7(0.250) = 2.15$ KSF.

$b/a = 1.0$ SIMPLY-SUPPORTED EDGES

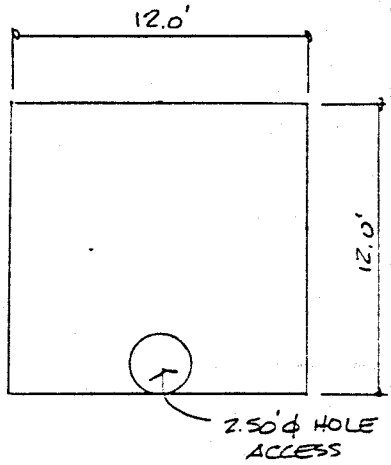

$M_U^{MAX} = 0.0479\,(2.15)(12.0)^2 = 14.8^{1-K/1}$

$V_U^{MAX} = 0.420\,(2.15)(12.0) = 10.8^{K/1}$

SHEAR

$$d \geq \frac{10.8}{0.85(2)\sqrt{\frac{4000}{1000}}(12)} = 8.37''$$

$t = 12''$ $d = 12 - 2 - \frac{3}{4} - \frac{3}{8} = 8.875''$ O.K.

$F = 0.079$ $K_U = 188$ $a_n = 4.35$

$$A_{s60} \geq \frac{14.8}{4.35(8.875)} = 0.38 \text{ IN.}^2/\text{FT.}$$

$\#6_{60}$ @ 12" o.c.
$\#5_{60}$ @ 9½" o.c.
} E.W. ←——→

ADD EXTRA BAR EA. SIDE OF OPENING.

JUNCTION BOX @ STA 0+71.00

BASE SLAB

DEAD LOAD

EARTH COVER	$0.120(14.33)^2(9.0)$	=	221.8^k
WALLS	$0.150(14/12)(13.167)(4)(15.0)$	=	138.3
BOX CULV.	$5.4(6.0)$	=	32.4
CMP	$2.3(6.0)$	=	13.8
		W_{DL} =	406.3^k

$$p = \frac{406.3}{(14.33)^2} = 1.98 \text{ KSF} \quad \text{SAY } 2.0 \text{ KSF}$$

LIVE LOAD = 250 PSF.

$$W_U = 1.4(2.0) + 1.7(0.250) = 3.23 \text{ KSF}$$

$$b/a = 1.0$$

$$M_U^{MAX} = 0.0479(3.23)(12.0)^2 = 22.9^{'-k/'}$$

$$V_U^{MAX} = 0.420(3.23)(12.0) = 16.3^{k/'}$$

SHEAR

$$d \geq \frac{16.3}{0.85(2)\frac{\sqrt{4000}}{1000}(12)} = 12.6''$$

$$t \geq 12.6 + 2 + 1 = 15.6'' \quad \text{SAY } 16''$$

$t = 16''$ $\quad d = 16 - 2 - 3/4 - 3/8 = 12.875''$ $\quad F = 0.166$ $\quad K_u = 138$ $\quad a_n = 4.37$

$$A_{s60} \geq \frac{22.9}{4.37(12.875)} = 0.41 \text{ IN.}^2/\text{FT.}$$

$\#6_{60}$ @ 12" o.c. ←——→

Morrison Maierle/CSSA	PROJECT: MARICOPA CO - GROVERS AVE. STORM DRAIN		
	BY: GREEN	DATE 8/24/94	PROJ. NO. 8156.001
	CHK:	DATE	PAGE 8 OF 14

JUNCTION STRUCTURE @ STA 12+97.91

SOILS PROPERTIES

$\gamma = 116$ PCF w/ 5% MOISTURE

EFP = 75 PSF/FT.

USE 2' SURCHARGE FOR VEHICLE LOAD

EARTH COVER = 7.0' ±

TYP. WALL LOADING

$p_{TOP} = 75\,(2.0 + 7.0 + 1.0) =$ 750 PSF.

$p_{BOT} = 75\,(2.0 + 7.0 + 1.0 + 10.0) =$ 1500 PSF.

TYP WALL ELEV. VIEWS

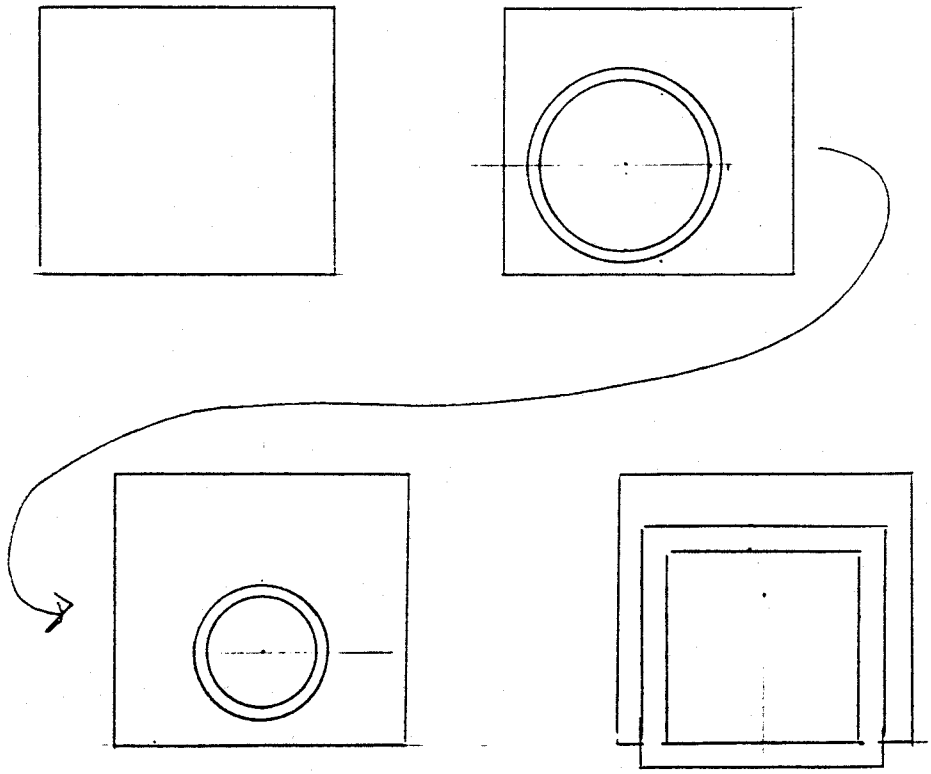

JUNCTION STRUCTURE @ STA. 12+97.91

TYP. WALL W/O PENETRATION

$b/a = 12.0/11.0 = 1.091$

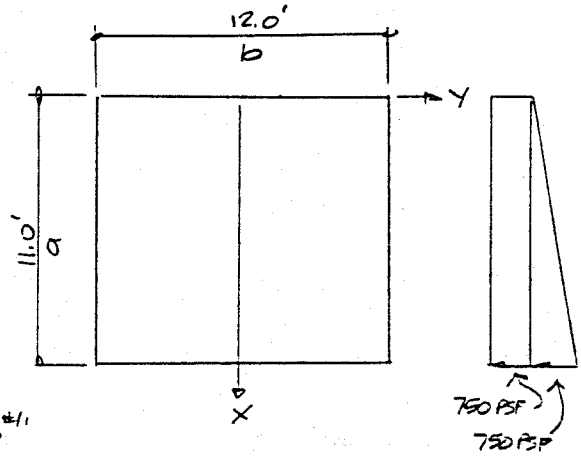

REF. TIMOSHENKO - TABLES

HINGED EDGES

CHECK SHEAR AT BASE OF WALL

$p_1 = 750$ PSF $\quad V_x = 0.440(750)(11.0) = 3630^{\#/'}$

$p_2 = 750$ PSF $\quad V_x = 0.304(750)(11.0) = 2508^{\#/'}$

$V = 3.63 + 2.51 = 6.14^{K/'}$

$V_u = 1.7(6.14) = 10.4^{K/'}$

$$d \geq \frac{10.4}{0.85(2)\sqrt{\frac{4000}{1000}}(12)} = 8.1''$$

USE $t = 12''$

$x = 0.5a \quad y = 0$ MID-HT, MID-SPAN

$M_x = 0.0554(0.75)(11.0)^2 + 0.0302(0.75)(11.0)^2 = 7.8^{'-K/'}$ (VERT. REINF)

$M_y = 0.0493(0.75)(11.0)^2 + 0.0251(0.75)(11.0)^2 = 6.8^{'-K/'}$ (HORZ. REINF)

$M_u = 1.7M$

VERT. REINF.

$M_u = 1.7(7.8) = 13.3^{'-K/'}$

$t = 12'' \quad d = 12 - 2 - 1/2 = 9.5'' \quad F = 0.090 \quad K_u = 147 \quad a_n = 4.37$

$$A_{s\,req} \geq \frac{133}{4.37(9.5)} = 0.32 \text{ in}^2/\text{FT.}$$

$\#5_{@}$ @ 12" o.c. ←——————→

JUNCTION STRUCTURE @ STA 12+97.91

TYP. WALL W/O PENETRATIONS (CONT'D)

HINGED EDGES (CONT'D)

HORZ. REINF

$M_U = 1.7(6.8) = 11.6^{'k/'}$

$t = 12''$ $d = 12 - 2 - 5/8 - 5/16 = 9.06''$ $F = 0.082$ $K_U = 141$ $a_n = 4.37$

$A_{s60} \geq \frac{11.6}{4.37(9.06)} = 0.29\ IN^2/FT.$

$\#5_{60}$ @ 12" O.C. ←——— *

HINGED AT TOP, FIXED AT SIDE & BOT

VERT. REINF @ BOT.

$M_x = -0.059(0.750)(11.0)^2 - 0.036(0.750)(11.0)^2 = -8.6^{'k/'}$

$M_U = 1.7(8.6) = 14.7^{'k/'}$

$d = 9.5''$ $F = 0.090$ $K_U = 163$ $a_n = 4.37$

$A_{s60} \geq \frac{14.7}{4.37(9.5)} = 0.35\ IN.^2/FT.$

$\#5_{60}$ @ 12" O.C. ←——— *

TABLE 1—MOMENT = COEFFICIENT × Wa^2

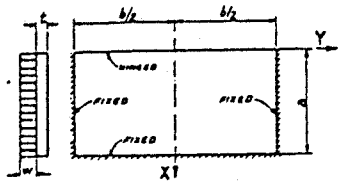

$\frac{b}{a}$	$\frac{x}{a}$	$y = 0$		$y = b/4$		$y = b/2$
		M_x	M_y	M_x	M_y	M_y
4.0	0	0	—	0	—	—
	1/4	0.063	0.013	0.058	0.016	—0.064
	3/8	0.071	0.014	0.066	0.018	—0.076
	1/2	0.064	0.013	0.060	0.016	—0.074
	3/4	0.002	0	0.003	0.003	—0.038
	1	—0.123	—	—0.117	—	—
3.0	0	0	—	0	—	—
	1/4	0.062	0.014	0.052	0.017	—0.064
	3/8	0.070	0.016	0.059	0.020	—0.076
	1/2	0.063	0.014	0.053	0.019	—0.074
	3/4	0.002	0.001	0.005	0.005	—0.038
	1	—0.122	—	—0.107	—	—
2.0	0	0	—	0	—	—
	1/4	0.054	0.018	0.038	0.018	—0.063
	3/8	0.061	0.022	0.043	0.021	—0.075
	1/2	0.056	0.020	0.039	0.020	—0.074
	3/4	0.005	0.005	0.006	0.007	—0.038
	1	—0.112	—	—0.082	—	—
1.5	0	0	—	0	—	—
	1/4	0.041	0.022	0.027	0.015	—0.061
	3/8	0.046	0.025	0.029	0.018	—0.072
	1/2	0.043	0.026	0.027	0.018	—0.071
	3/4	0.008	0.010	0.006	0.008	—0.037
	1	—0.091	—	—0.061	—	—
1.0	0	0	—	0	—	—
	1/4	0.020	0.021	0.012	0.010	—0.047
	3/8	0.022	0.026	0.012	0.012	—0.056
	1/2	0.021	0.026	0.011	0.011	—0.056
	3/4	0.009	0.013	0.005	0.006	—0.032
	1	—0.051	—	—0.032	—	—

TABLE 2—MOMENT = COEFFICIENT × Wa^2

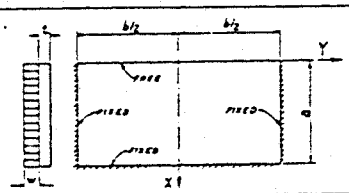

$\frac{b}{a}$	$\frac{x}{a}$	$y = 0$		$y = b/4$		$y = b/2$
		M_x	M_y	M_x	M_y	M_y
5.0	0	0	0.027	0	0.054	—0.426
	1/4	—0.015	0.015	0	0.039	—0.284
	1/2	—0.097	—0.010	—0.058	0.011	—0.153
	3/4	—0.248	—0.047	—0.180	0.029	—0.046
	1	—0.469	—	—0.379	—	—
4.0	0		0.052	0	0.060	—0.419
	1/4	—0.002	0.036	0.006	0.046	—0.280
	1/2	—0.070	0.004	—0.038	0.018	—0.152
	3/4	—0.211	—0.037	—0.140	—0.019	—0.046
	1	—0.431	—	—0.319	—	—
3.0	0	0	0.086	0	0.058	—0.387
	1/4	0.017	0.064	0.011	0.045	—0.265
	1/2	—0.028	0.028	—0.015	0.023	—0.174
	3/4	—0.144	—0.019	—0.088	—0.009	—0.047
	1	—0.348	—	—0.233	—	—
2.0	0	0	0.099	0	0.041	—0.280
	1/4	0.027	0.080	0.012	0.034	—0.206
	1/2	0.015	0.047	0.008	0.021	—0.127
	3/4	—0.051	0.005	—0.029	0.002	—0.046
	1	—0.202	—	—0.124	—	—
1.5	0	0	0.080	0	0.027	—0.185
	1/4	0.021	0.067	0.009	0.023	—0.148
	1/2	0.022	0.045	0.011	0.017	—0.102
	3/4	—0.012	0.013	—0.006	0.005	—0.042
	1	—0.120	—	—0.073	—	—
1.0	0	0	0.044	0	0.012	—0.088
	1/4	0.010	0.040	0.003	0.012	—0.078
	1/2	0.014	0.031	0.007	0.011	—0.063
	3/4	0.006	0.014	0.004	0.006	—0.033
	1	—0.053	—	—0.032	—	—

TABLE 3—MOMENT = COEFFICIENT × Wa^3

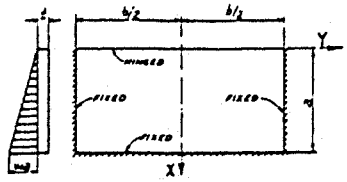

11

$\frac{b}{a}$	$\frac{x}{a}$	$y = 0$		$y = b/4$		$y = b/2$
		M_x	M_y	M_x	M_y	M_y
4.0	0	0	—	0	—	—
	1/4	0.023	0.005	0.021	0.006	—0.024
	1/2	0.030	0.006	0.028	0.008	—0.035
	3/4	0.006	0.001	0.006	0.002	—0.022
	1	—0.065	—	—0.063	—	—
3.0	0	0	—	0	—	—
	1/4	0.022	0.005	0.018	0.007	—0.024
	1/2	0.030	0.007	0.025	0.009	—0.035
	3/4	0.006	0.001	0.007	0.003	—0.022
	1	—0.065	—	—0.058	—	—
2.0	0	0	—	0	—	—
	1/4	0.019	0.007	0.013	0.007	—0.024
	1/2	0.026	0.009	0.019	0.009	—0.035
	3/4	0.007	0.003	0.007	0.005	—0.022
	1	—0.060	—	—0.047	—	—
1.5	0	0	—	0	—	—
	1/4	0.013	0.009	0.008	0.005	—0.023
	1/2	0.021	0.012	0.013	0.008	—0.034
	3/4	0.008	0.006	0.007	0.005	—0.022
	1	—0.051	—	—0.036	—	—
1.0	0	0	—	0	—	—
	1/4	0.005	0.008	0.003	0.003	—0.017
	1/2	0.010	0.012	0.006	0.006	—0.027
	3/4	0.008	0.007	0.005	0.004	—0.020
	1	—0.032	—	—0.021	—	—

TABLE 4—MOMENT = COEFFICIENT × Wa^3

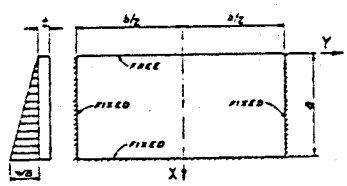

$\frac{b}{a}$	$\frac{x}{a}$	$y = 0$		$y = b/4$		$y = b/2$
		M_x	M_y	M_x	M_y	M_y
5.0	0	0	0.007	0	0.015	—0.104
	1/4	0.002	0.005	0.006	0.012	—0.081
	1/2	—0.013	0	—0.003	0.006	—0.055
	3/4	—0.061	—0.012	—0.043	—0.006	—0.024
	1	—0.158	—	—0.134	—	—
4.0	0	0	0.014	0	0.017	—0.102
	1/4	0.005	0.011	0.007	0.014	—0.080
	1/2	—0.006	0.004	0.002	0.008	—0.055
	3/4	—0.052	—0.009	—0.032	—0.004	—0.024
	1	—0.148	—	—0.117	—	—
3.0	0	0	0.024	0	0.015	—0.093
	1/4	0.010	0.019	0.007	0.014	—0.076
	1/2	0.005	0.010	0.007	0.010	—0.054
	3/4	—0.033	—0.004	—0.018	0	—0.025
	1	—0.126	—	—0.092	—	—
2.0	0	0	0.027	0	0.010	—0.064
	1/4	0.012	0.024	0.006	0.010	—0.060
	1/2	0.016	0.017	0.011	0.010	—0.048
	3/4	—0.007	0.003	—0.002	0.003	—0.024
	1	—0.084	—	—0.058	—	—
1.5	0	0	0.021	0	0.006	—0.039
	1/4	0.009	0.020	0.004	0.007	—0.044
	1/2	0.015	0.017	0.009	0.008	—0.041
	3/4	0.003	0.006	0.004	0.004	—0.023
	1	—0.058	—	—0.039	—	—
1.0	0	0	0.010	0	0.002	—0.014
	1/4	0.003	0.012	0.001	0.003	—0.023
	1/2	0.009	0.013	0.005	0.005	—0.028
	3/4	0.008	0.008	0.005	0.004	—0.020
	1	—0.032	—	—0.021	—	—

Morrison Maierle/CSSA	PROJECT: MARICOPA CO - GROVERS AVE STORM DRAIN		
	BY: GREEN	DATE 8/25/04	PROJ. NO. 8156.001
	CHK:	DATE	PAGE: 12 OF 14

JUNCTION STRUCTURE @ STA. 12+97.91

TYP. CORNER BTWN RCP'S

AT CTR OF 60"Φ RCP

$p_1 = 750$ PSF

$p_2 = \left(\frac{750}{11.0}\right)(7.0) \cong 480$ PSF.

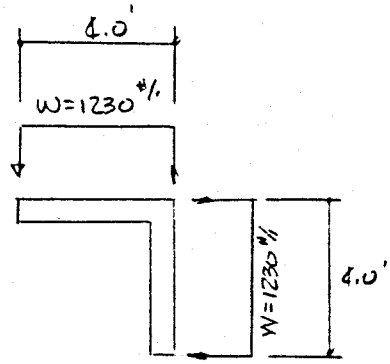

CONSIDER UNIT WIDTH STRIP

$w = 750 + 480 = 1230$ #/'

$M_H = \frac{1}{2}(1.230)(3.0)^2 = 5.5$ '-#/'

$M_U = 1.7(5.5) = 9.4$ '-#/'

$t = 12"$ $\quad d = 12 - 2 - 5/8 - 5/16 = 9.06"$ $\quad F = 0.082$ $\quad K_U = 114$ $\quad a_n \cong 4.37$

$A_{s60} \geq \frac{9.4}{4.37(9.06)} = 0.24$ IN.²/FT.

#5 @ 12" o.c.

JUNCTION STRUCTURE @ STA 12+97.91

ROOF SLAB

NEGLECT WT. OF ACCESS MANHOLE
USE WT. OF EARTH COVER OVER ENTIRE ROOF SLAB

SLAB CLEAR SPAN = 12.0' x 12.0'

D.L. = 0.120(7.0) + 0.150(1.0) ≅ 1.0 KSF.
L.L. = 0.250 KSF.

$W_u = 1.4(1.0) + 1.7(0.250) = 1.83$ KSF.

$b/a = 1.0$

SIMPLY-SUPPORTED EDGES

$M_u^{MAX} = 0.0479(1.83)(12.0)^2 = 12.6$ '-K/' @ CENTER

FIXED EDGES

AT EDGE $M_u^{MAX} = -0.0513(1.83)(12.0)^2 = -13.5$ '-K/'

AT CENTER $M_u^{MAX} = 0.0213(1.83)(12.0)^2 = 5.6$ '-K/'

AT CENTER

$t = 12''$ $d = 12 - 2 - 5/8 - 5/16 = 9.06''$ $F = 0.082$ $K_u = \frac{12.6}{0.082} = 154$ $a_n = 4.38$

$A_{s60} \geq \frac{12.6}{4.38(9.06)} = 0.32$ IN.²/FT.

#5₆₀ @ 12" o.c. ←——→

AT EDGE

USE #5₆₀ @ 12" o.c. ←——→
EXTEND 4'-0" INTO SLAB

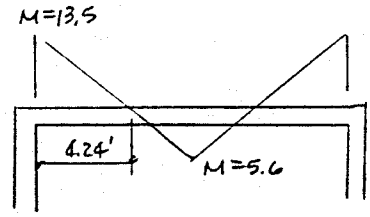

JUNCTION STRUCTURE @ STA. 12+97.91

BASE SLAB

DEAD LOAD

EARTH COVER	$0.120(14.0)^2(7.1)$	=	167.0^k
WALLS	$0.150(1.0)(4)(13.0)(11.0)$	=	85.8
BOX CULVERT	$5.4(6.0)$	=	32.4
84"ϕ RCP	$2.4(6.0)$	=	14.4
60"ϕ RCP	$1.3(6.0)$	=	7.8
	W_{DL}	=	307.4^k

$$p = \frac{307.4}{(14.0)^2} = 1.57 \text{ KSF.}$$

LIVE LOAD = 250 PSF

$$W_U = 1.4(1.57) + 1.7(0.250) = 2.6 \text{ KSF}$$

$b/a = 1.0$ SIMPLY SUPPORTED

$$M_U^{MAX} = 0.0479(2.6)(12.0)^2 = 17.9^{K'/'}$$

$$V_U^{MAX} = 0.420(2.6)(12.0) = 13.1^{K/'}$$

SHEAR

$$d \geq \frac{13.1}{0.85(2)\frac{\sqrt{4000}}{1000}(12)} = 10.2''$$

$$t \geq 10.2 + 2 + 1 = 13.2''$$

$t = 15''$ $d = 15 - 2 - 5/8 - 5/16 = 12.1''$ $F = 0.146$ $K_U = 123$ $a_n = 4.37$

$$A_{s60} \geq \frac{17.9}{4.37(12.1)} = 0.34 \text{ IN}^2/\text{FT}$$

#5 @ 12" o.c. E.W.