FLOODPLAIN CERTIFICATION PROGRAM

FLOODPLAIN ANALYSIS – APPROXIMATE ZONE A
PHOENIX, ARIZONA

[ST83130143]

June 15, 2002
Revised January 3, 2003

Project No.: 6300002205

Prepared for:

Street Transportation Department
City of Phoenix
200 West Washington Street
Phoenix, Arizona 85003

Prepared by:

LANDMARK ENGINEERING, INC.
7310 N. 16TH STREET, SUITE 285
PHOENIX, ARIZONA 85020

(602) 861-2005

Registered Professional Engineer (Civil)
CERTIFICATE NO.
12890
JAMES D.
LEMON
Date Signed 1/27/03
ARIZONA, U.S.A.

LANDMARK
ENGINEERING INC.

LANDMARK
ENGINEERING INC

7310 N. 16th Street, Suite 285
PHOENIX, ARIZONA 85020

PHONE: (602) 861-2005 *FAX: (602) 861-2175*

LETTER OF TRANSMITTAL

To: City of Phoenix – Floodplain Management
200 West Washington St. 5th Floor
Phoenix AZ 85003

Job No. 01094
Date: Monday, June 30, 2003

Attn: Michael Cano, E.I.T.

Re: COP Floodplain Analysis

WE ARE SENDING YOU THE ATTACHED ITEMS (via): Delivery

COPIES	DATE	PAGES	DESCRIPTION
2	06/16/03	8	Updated Elevation Certificates for Lot #66, #43, #29 & #77 w/ Base Flood Elevations
2	06/16/03	2	Updated table for two (2) reports (Floodplain Certificate Program Reports by LEI (06-15-03) page 12
1	06/16/03	1	Updated MT-1 Form
1	06/16/03	1	Updated MT-1 Form for FEMA Submittal (date now matches information and dates)

THESE ARE BEING TRANSMITTED (as checked below):

- [X] For Approval
- [X] For Reports
- [X] For Your Use
- [ ] For Review and Comment
- [X] As Requested

REMARKS:

Dear Michael,

Here are the documents we talked about on Friday. I have changed a total of four elevation certificates with their respective base flood elevations. The error made on the elevation certificates was not caught during my review and for that, I apologize. Michael Wolf made a judgment call to write in "did not participate" ("DNP") on the elevation certificates that we did not have the cooperation of the homeowner. After having discussions with the C.O.P. we are now filling in the Base Flood Elevations (BFE's) for all certification forms. Sorry for any inconvenience.

Best regards,

Matthew D. Walsvik

Matthew D. Walsvik, E.I.T.

Received by:

Matthew D. Walsvik

From: Matthew D. Walsvik, E.I.T.

FLOODPLAIN CERTIFICATION PROGRAM

FLOODPLAIN ANALYSIS – APPROXIMATE ZONE A
PHOENIX, ARIZONA

[ST83130143]

June 15, 2002
Revised January 3, 2003

Project No.: 6300002205

Prepared for:

Street Transportation Department
City of Phoenix
200 West Washington Street
Phoenix, Arizona 85003

Prepared by:

LANDMARK ENGINEERING, INC.
7310 N. 16TH STREET, SUITE 285
PHOENIX, ARIZONA 85020

(602) 861-2005

Registered Professional Engineer (Civil)
CERTIFICATE NO.
12890
JAMES D.
LEMON
Date Signed 1/27/03
ARIZONA, U.S.A.

LANDMARK
ENGINEERING INC.

TABLE OF CONTENTS

1.0 INTRODUCTION **1**

1.1 SCOPE OF WORK 1
1.2 SITE LOCATION 1
1.3 SITE DESCRIPTION 1

2.0 METHODOLOGY **4**

2.1 OVERVIEW 4
2.2 DATA COLLECTION 4
2.3 SURVEY 7
2.4 DIGITAL TERRAIN MODELING 7
2.5 HYDRAULIC ANALYSIS 8

3.0 RESULTS **10**

4.0 RECOMMENDATIONS **11**

5.0 ADDENDUM **11**

FIGURES

Figure 1	Site Vicinity Map
Figure 2	Flood Insurance Rate Map
Figure 3	Hydrology From the Loop 202 Report
Figure 4	Comparison of Methodologies

APPENDICES

Appendix A	Excerpts from the ADOT Report
Appendix B	Hydraulic Calculations
Appendix C	Address List
Appendix D	FEMA Elevation Certificates

EXHIBITS

Exhibit 1	Possible Floodplain Adjustments
Exhibit 2	Address Map
Exhibit 3	Base Flood & Finished Floor Elevations

1.0 INTRODUCTION

This report presents the findings for the *Elevation Certificate Program* for the McDowell Acres Neighborhood. Landmark Engineering, Inc. (LEI) is under contract with the City of Phoenix (COP) to analyze an existing community, which has historically been located in a designated Zone A floodplain. The study area is to the north of the Red Mountain (Loop 202) Freeway, east of 32nd Street, west of 36th Street and south of McDowell Road. The floodplain analysis was to be conducted in 2 phases. The first was an evaluation phase, where the consultant was to determine the survey that would be required and a methodology for determining base flood elevations. The second phase is to perform the required survey on the identified lots in order to fill out Elevation Certificates for each lot. The elevation certificates are a valuable tool for determining compliance with the floodplain management ordinances. This report will discuss the specifics of this site, the procedures used in making recommendations, the methodologies applied during the analysis and the engineer's recommendations for phase 2 of this work.

1.1 Scope of Work

The scope of work for the project is divided into two phases. The first phase consists of verification of topography with corresponding Federal Insurance Rate Map (FIRM). This included obtaining spot elevations to verify the elevations on various quarter-section maps and a full topographic mapping of the canal bank. All surveyed points are to be tied into the COP benchmarks horizontally and vertically. From this, the consultant was to determine which residences should have the structural pad elevations surveyed in phase 2. Phase 2 was to consist of performing the survey of the proposed lots to aid in the preparation of FEMA Elevation Certificate forms. Then depending on a case-by-case situation, assist in the preparation of the FEMA application form for single residential lot or structure.

1.2 Site Location

The study site is located in the northwest quarter of Section 1 of Township 1N, Range 3E of the Gila and Salt River Base and Meridian, Phoenix, Arizona. The study site location is shown on the site vicinity map, **FIGURE 1** on page 2. The site is bounded on the north by McDowell Road, on the west by 32nd Street, on the east by 36th Street, and on the south by the Grand Canal, just north of the Red Mountain Freeway (Loop 202).

1.3 Site Description

The study site is generally triangular in shape, and encompasses approximately 73 acres, of which approximately 15.5 acres are in the designated Zone A area. The Maricopa County, Arizona and Incorporated Areas Flood Insurance Rate Map (FIRM) panel number 04013C2135 E, as shown in **FIGURE 2** on page 3, indicates that the site falls within Zone A. Zone A is defined by FEMA as:

> Areas of 100-year flood; base flood elevations and flood hazard factors not determined.

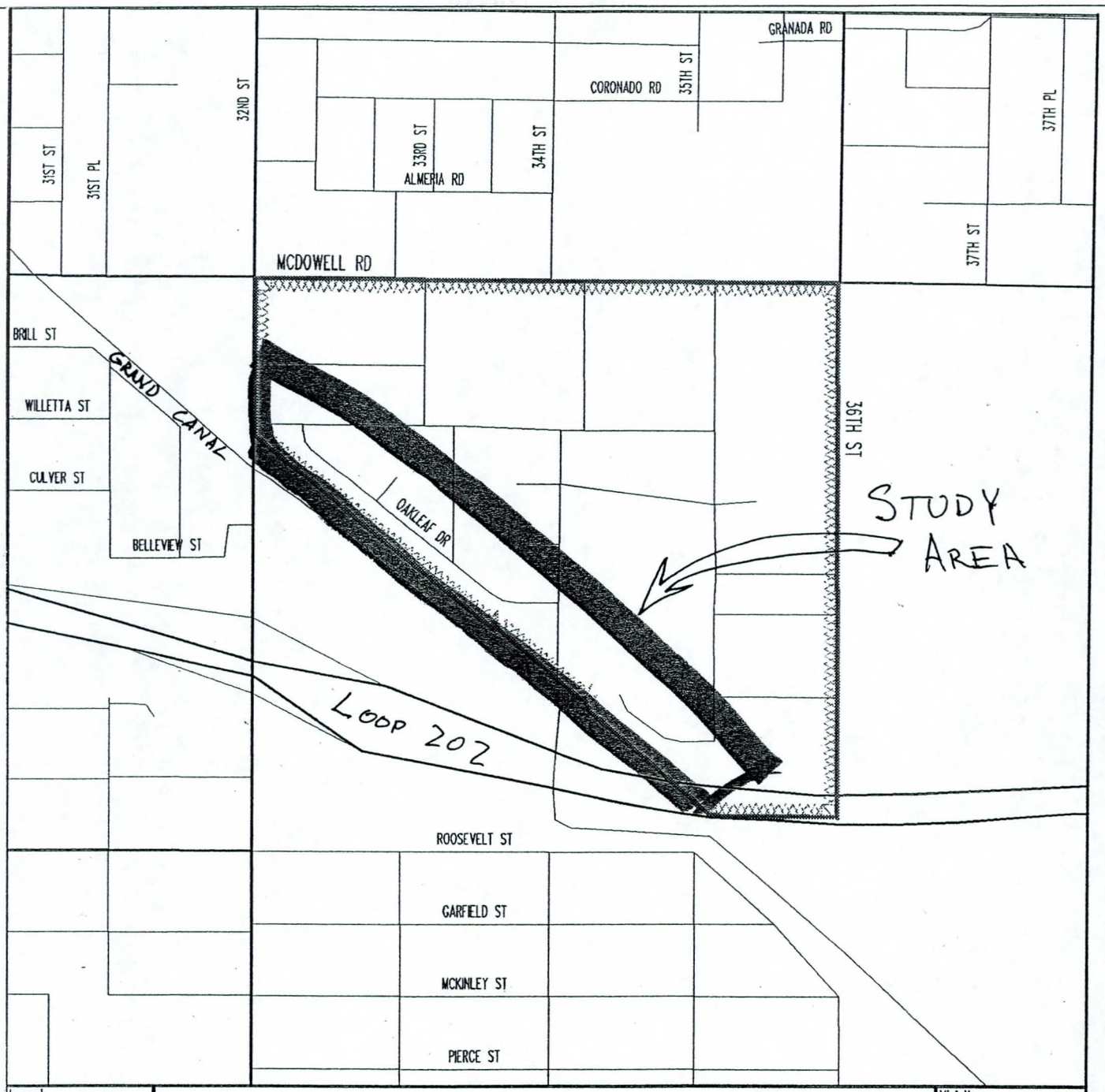

Legend:
Major Street
Minor Street
Association

Mr. Norm Magnan as Chairman
1515 N. 35th St., Phoenix, AZ 85008
(602) 244-0791 (Day)

Vicinity:

Date: 09/19/2000
Scale: 1" = 685'

NEIGHBORHOOD SERVICES DEPARTMENT

City of Phoenix

Assoc. Number: 08-0386

LANDMARK ENGINEERING, INC.
7310 N. 16TH STREET SUITE 285
PHOENIX, ARIZONA 85020 (602) 861-2005

C.O.P. FLOODPLAIN ANALYSIS
VICINITY MAP

FIGURE 1

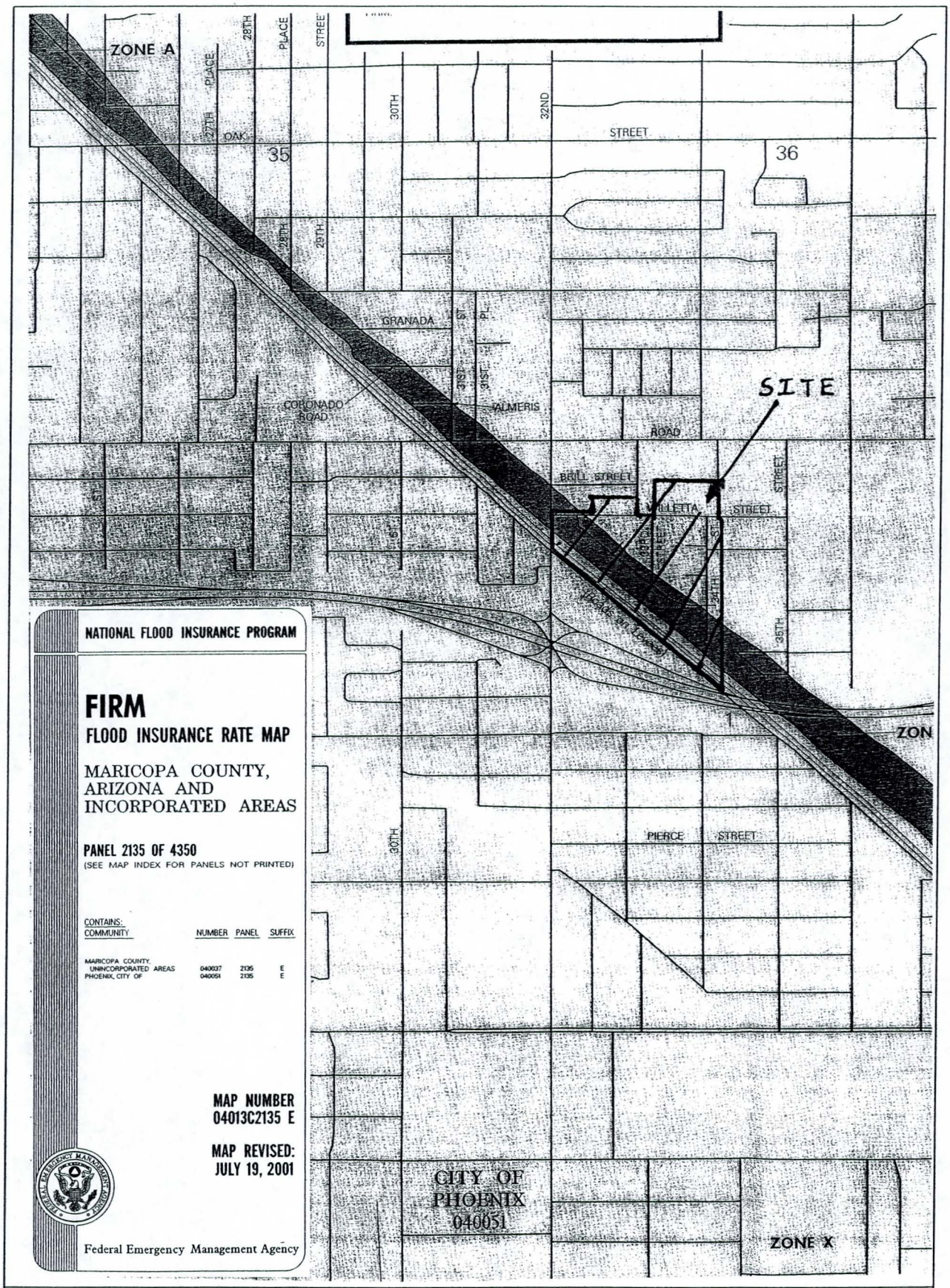

LANDMARK ENGINEERING, INC.
7310 N. 16TH STREET SUITE 285
PHOENIX, ARIZONA 85020 (602) 861-2005

Floodplain Analysis

FIRM MAP

FIGURE 2

The area is delineated as a Zone A due to the fact that the Grand Canal is elevated approximately 2 feet above the low outfall for this neighborhood and causing ponding behind the canal. The existing neighborhood was constructed during the 1950's. The Grand Canal has been in place since the residences were built. During the late 1980's, Arizona Department of Transportation (ADOT) realigned the Grand Canal in order to construct the Red Mountain Freeway.

The FIRM mapping still reflects the old canal location's delineation. During the mid-1990's a school was built on the east side of the project between 34th Street and 35th Street. This school has large retention areas, ball fields on the south side of the property, abutting a collector channel, which conveys excess runoff from the crosscut canal to the ADOT retention basin located between the Grand Canal and the Loop 202. **FIGURE 3** on page 5, shows the relationship of these features.

2.0 METHODOLOGY

The original approach for this analysis was to compare topographic elements to the Base Flood Elevation (BFE) and determine the best candidates for Elevation Certificates based on additional field survey. Because there are no BFE's for this area, an alternate methodology to determine which pads should be surveyed was developed. The alternate methodology is discussed in the next few sections.

2.1 Overview

Based on the Flood Insurance Study (FIS) conducted in the 1970's by the Corps of Engineers for the Federal Insurance Administration, the study area is located in a Zone A. The Zone A determination was based on the approximate elevation of the elevated Grand Canal. According to the FIS, the delineation was done this way because the amount of surface discharge running along the base of the canal from east to west was considerable.

2.2 Data Collection

The Flood Control District of Maricopa County (FCDMC) confirmed that the Zone A designation was arrived at using *approximate* methods. For this particular case, the hydraulics determined the designation, not the hydrology. Due to the continuity running the length of the Grand Canal, there was no specific outfall to hydraulically evaluate. Instead, the structure itself was evaluated for overtopping. For this method, elevations were taken along the canal top of bank and projected back. This method is typically a conservative estimate depending on the mapping available. The elevation was estimated to within 1 foot plus or minus.

Landmark Engineering, Inc., obtained and reviewed the drainage design report for the Loop 202 freeway to evaluate the hydrologic method used in that study. The *Final Drainage Design Report for Contract No. 84-18 East Papago (SR 217)* was prepared by A-N West, Inc. in July of 1989 for ADOT. APPENDIX A of this report includes some relevant excerpts from the A-N West report. The drainage report addressed historical discharges and quantified the flows based on a TR-20 analysis.

REVISIONS		
NO.	DESCRIPTION/DATE	BY

LANDMARK ENGINEERING, INC.
7310 N. 16th STREET SUITE 285
PHOENIX, ARIZONA 85020 (602) 861-2005

HYDROLOGY FROM LOOP 202 REPORT
C.O.P. FLOOD PLAIN ANALYSIS

FIGURE 3
32ND STREET AND GRAND CANAL
PHOENIX, AZ

FIGURE 3

KEY MAP

JOB NO.	01094
DESIGNED	—
DRAWN	—
ACAD FILE	HW-MAO
CHECKED	—
DATE	01-03-03

After reviewing the methodology used, it was determined that the hydrologic data was fundamentally sound and can be used in this study if needed. **FIGURE 3**, on page 5, shows the 100-year peak discharges according to the report along with depths of flow determined using the Manning's and Continuity equations. The exhibit also shows the approximate limits of the Zone A floodplain as it was determined in the FIS. Additional information that was extracted from the drainage report was the proposed design for the realignment of the Grand Canal. This design showed a new inlet structure, which was constructed, on the south side of the study area. The inlet is a 32' wide by 2' high cutout in a block wall with a reinforced vertical grate. Photo 1, below, shows the inlet which was constructed during the realignment of the canal. The invert of the inlet was constructed at an elevation of 1133.0'as confirmed by LEI's field survey. Behind the opening is a concrete spillway which discharges to the channel conveying flows from the crosscut canal to the retention basin.

Photo 1: Inlet constructed with the realignment of the Grand Canal.

Below is Photo 2, looking back at this opening from the canal bank. The invert is approximately 3+ feet below the canal bank.

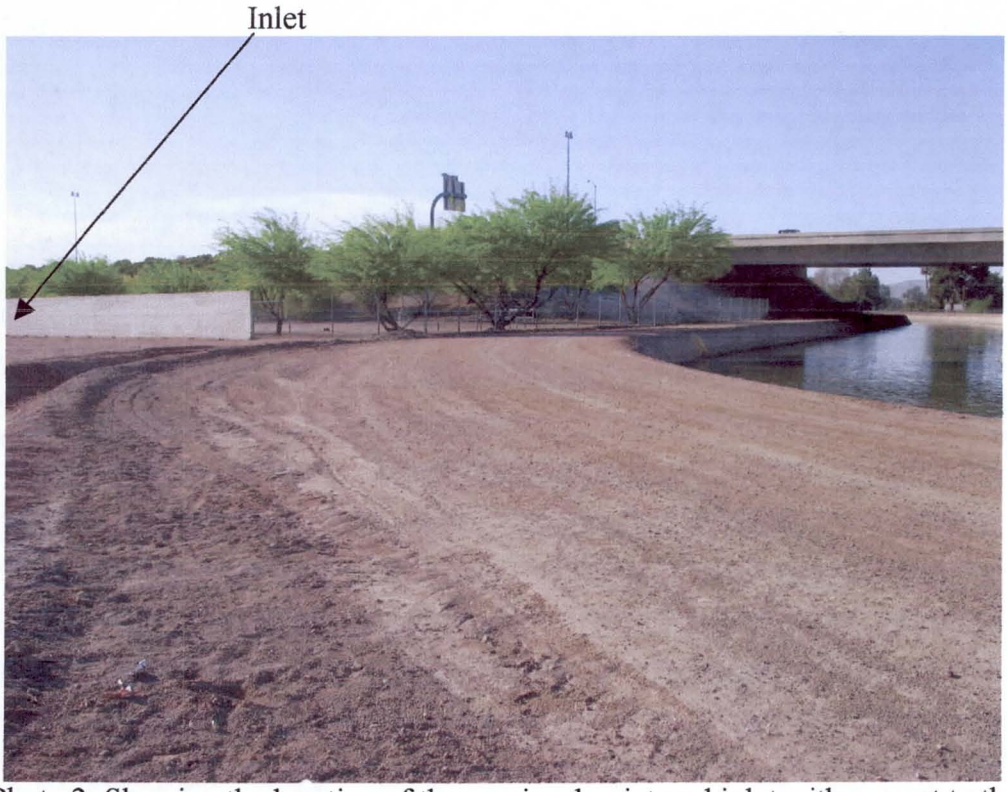

Photo 2: Showing the location of the previously pictured inlet with respect to the canal.

2.3 Survey

Base maps for the project were assembled from quarter-section maps, utility maps and field surveys. In addition to surveying standard monuments and verifying the rims on sewer manholes, cross-sections of all of the roadways were collected and all centerline grades were obtained at each intersection. The canal bank was cross-sectioned every 25 feet for the entire length. The bench mark used was the brass cap in hand hole at 32nd Street and McDowell Road. The elevation was 1138.77' and is on the City of Phoenix datum. The survey included the entire neighborhood from 32nd Street to 36th Street, south of McDowell Road and north of the Grand Canal.

2.4 Digital Terrain Modeling

After compiling all of the base maps and survey data, a digital terrain model (DTM) was created which included all of the local streets, alleys and the canal banks. Completed topographic information is presented in **FIGURE 3** and **4**. After the DTM was completed, additional survey was performed to verify the accuracy of the model. It was determined that the model was of reasonable accuracy for determining intersecting planes between the canal bank and the neighborhood being studied.

2.5 Hydraulic Analysis

The purpose of the DTM, as described in the previous section, was to see if a more accurate overtopping elevation, based on the top of bank, could be mapped. **FIGURE 4**, on page 9, represents where the elevation of the top of bank is, relative to the streets and lots. This exhibit also has the depth of flow from the street capacity calculations taken from the ADOT report. The street capacity calculations are more conservative than the approximate method that was used to generate the original high-water limit for the F.I.R.M.. As is demonstrated by the projection of the top of bank back onto the residential development, more accurate topography produces significantly better results than the approximate methods. Below is a photo looking at the canal, due south from 34th Street. This photo shows that the Grand Canal is an obstruction.

Photo 3: 34th Street looking south at the canal bank from ground level.

The inlet structure at the south side of the study area was analyzed to determine the effects of ponding on the neighborhood. The opening was calculated as both a weir and as an orifice. Typically, a vertical opening will operate as a weir up to, approximately 1.4 times, the opening height. For the transition area between 0.8 times the opening height (1.6') and 1.4 times the height (2.8') the discharge was calculated as Q_{min} (Q_{weir},$Q_{orifice}$). The calculations, presented as rating curves are in **APPENDIX B**. Rather than just comparing the peak discharges generated in the ADOT report, LEI also looked at what happens as the depth of water increases. When the ponded water reaches an elevation of 1135.9', approximately 3' above the inlets invert, the water would

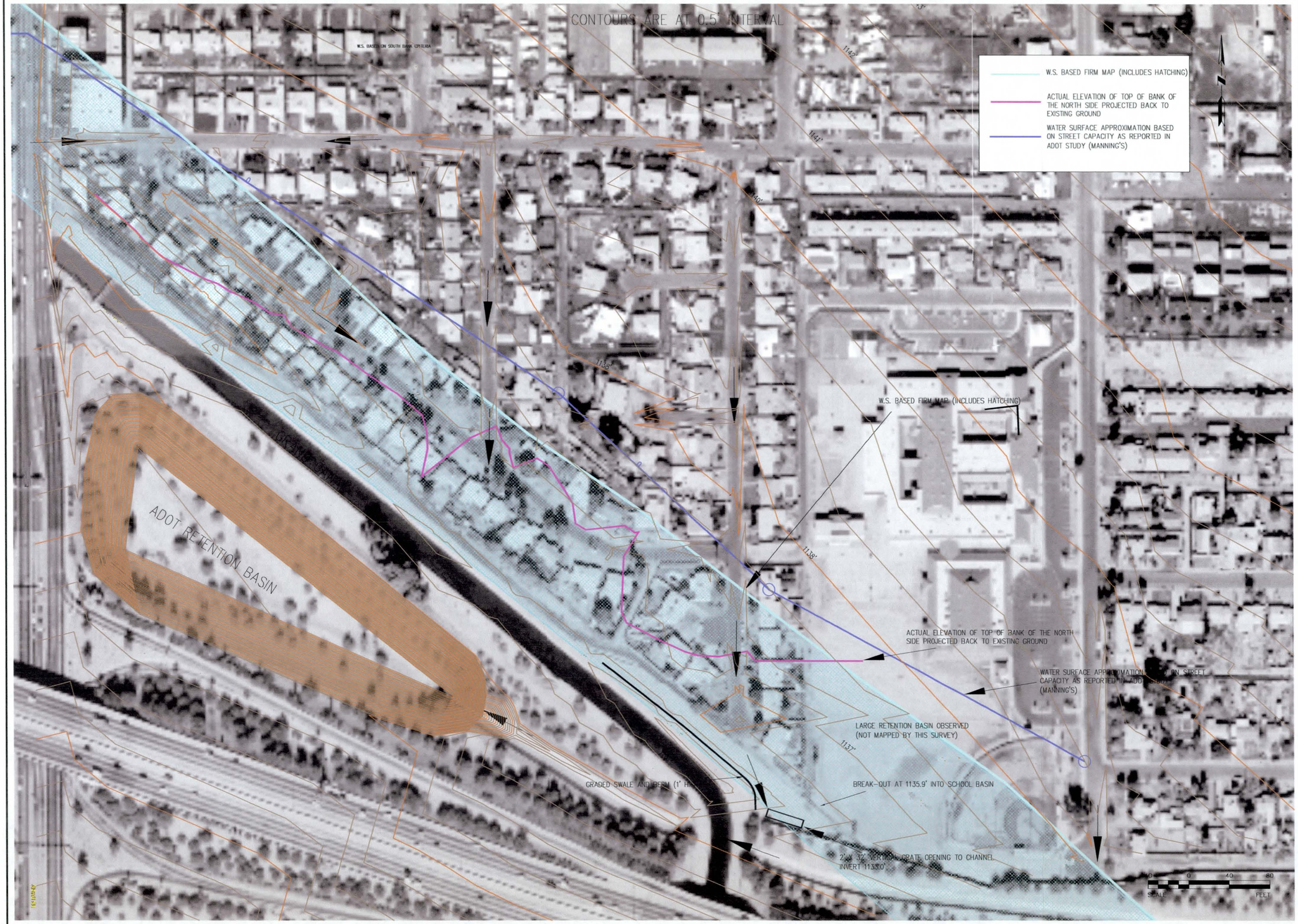

REVISIONS		
NO.	DESCRIPTION/DATE	BY

LANDMARK ENGINEERING, INC.
7310 N. 16th STREET SUITE 285
PHOENIX, ARIZONA 85020 (602) 861-2005

COMPARISON OF METHODOLOGIES FLOODPLAIN CERTIFICATE PROGRAM

ST85130143
PHOENIX, ARIZONA

FIGURE 4

KEY MAP

JOB NO.	01094
DESIGNED	—
DRAWN	—
ACAD FILE	HW-MAO
CHECKED	—
DATE	01-03-03

breakout to the east and north. After the water reaches this elevation, it begins to fill the retention basins located on the school property to the east. Shortly after the water reaches an elevation of 1136.5± the floodwaters would overtop the canal. These two scenarios are shown on **EXHIBIT 1**, in the pocket of this report.

3.0 RESULTS

The Zone A delineation for this study area was determined by approximate methods in the 1970's. The approximate method used was to measure the average height of the canal, then using the average slope upstream of the canal project back the horizontal offset distance. This method is typically accurate to within a foot. Landmark Engineering surveyed the study area, including the North bank of the Grand Canal. A digital terrain model was created from the topographic information. The bank elevation was then projected upstream until it intersected the neighborhood. The intersecting points were then connected to form the actual limits of ponding. This is shown as a magenta line on **FIGURE 4** (page 9).

During the field survey, a vertical opening inlet was observed north and east of the canal bank. This inlet was constructed in the mid-1980's when the Grand Canal was re-aligned for the construction of the Loop 202 freeway. When the ponded water depth reaches the elevation where the canal is overtopped (top of bank), the inlet can pass 300+ cfs. The existing hydrologic analysis states that the 100-year peak discharge affecting this neighborhood is approximately 300 cfs. At a later date, the City of Phoenix may want to consider a more detailed hydrologic analysis impacting the study area. For this study, the canal bank elevation was the determining factor for which lots would be surveyed in Phase 2.

After reviewing all of the materials available and performing the mapping for this project LEI has made some recommendations for pads to be surveyed in the second phase of this project. Those recommendations can be found in section 4.

4.0 RECOMMENDATIONS

EXHIBIT 1 in the pocket of this report shows the locations of the most probable lots that are higher than the floodplain elevation. The homeowners' addresses are included in multiple formats in **APPENDIX C**. These lots are deemed to be candidates for additional survey work and study.

1. The site is situated in an area that has historically accepted stormwater runoff and is in a Zone A. This is because the Grand Canal, to the south, is elevated.
2. Multiple methods could potentially be used to determine base flood elevations. The Phase 2 scope is to survey the most probable pads and complete Elevation Certificates.
3. Re-alignment of the Grand Canal and the addition of the outfall structure (vertical inlet) could allow for some lots to be removed, at a future date, from the Zone A using the MT-EZ for a LOMA.
4. The best candidates for additional survey work are indicated on Exhibit 4.
5. The Phase 2 survey of the pads and completion of the Elevation Certificates can be completed upon notification of the homeowners.

5.0 ADDENDUM

The lots shown in **EXHIBIT 1** in the pocket of this report have been surveyed and an Elevation Certificate has been completed. The Elevation Certificates can be found in APPENDIX D. In addition to each Elevation Certificate, there is a worksheet for each lot surveyed which shows the raw field information. These worksheets show the location of surveyed elevations and the structure type for each lot.

A table, on page 12, summarizes the results of the field survey work. This table represents the information listed on the elevation certificates.

> An excerpt was taken from the Federal Emergency Management Agency to explain the basis of Landmark Engineering, Inc. determination:
>
> *If no fill has been placed, FEMA's determination as to whether the Special Flood Hazard Area (SFHA) designation may be removed from the structure(s) on a property will be based on a comparison of the BFE with the elevation of the Lowest Adjacent Grade to the structure (lowest ground touching the structure) including any attached decks or garage. If fill has been placed, FEMA's determination will be based on a comparison of the BFE with the elevation of the lowest adjacent grade to the structure (lowest ground touching the structure) including any attached decks or garage and a completed Community Acknowledgement Form.*

Lot Number	Assessor's Parcel Number	Finished Floor Elevation	Lowest Adjacent Grade to Structure	Elevation of Bank*
78	121-08-065	1,138.08'	1,137.13'	1,137.6'
79	121-08-069	1,138.23'	1,137.61'	1,137.5'
70	121-08-059	1,138.05'	1,137.09'	1,137.3'
64	121-08-053	1,138.49'	1,137.52'	1,137.1'
65	121-08-054	1,137.97'	1,136.94'	1,138.6'
66	121-08-055	1,137.53'	1,136.57'	1,136.8'
67	121-08-056	1,137.55'	1,136.63'	1,136.8'
77	121-07-018	1,137.42'	**N/A	1,137.2'
78	121-07-019	1,137.67'	1,137.04'	1,137.2'
69	121-07-009	1,137.21'	1,135.96'	1,137.'
68	121-07-008	1,137.17'	1,136.59'	1,136.9'
67	121-07-007	1,137.12'	1,136.30'	1,136.8'
44	121-07-122	1,137.80'	1,136.27'	1,136.8'
43	121-07-021	**N/A	**N/A	1,136.9'
38	121-07-116	1,136.70'	1,136.00'	1,137.4'
37	121-07-115	1,136.72'	1,136.12'	1,137.7'
36	121-07-114	1,136.83'	1,136.11'	1,138.3'
30	121-07-108	1,136.88'	1,136.25'	1,138.2'
29	121-07-107	1,136.85'	**N/A	1,138.6'
28	121-07-106	1,136.18'	1,135.91'	1,138.6'
27	121-07-105	1,137.92'	1,136.94'	1,138.2'
26	121-07-104	1,138.08'	1,137.02'	1,138.3'

**Ultimate outfall elevation that is perpendicular to the Grand Canal*

**N/A = Landmark Engineering was not able to complete a full survey

EXECUTIVE SUMMARY

As part of the C.O.P. project ST 83130143, Landmark Engineering, Inc. performed a detailed survey of the residences on Oakleaf Drive. These houses were identified in Phase 1 as having the potential to be removed from the flood hazard area. A field survey was performed on 22 lots located within the study area of McDowell Road to the Grand Canal/ 32nd Street to 36th Street.

A table, on page 12, summarizes the comparison between the lowest adjacent grade of the structure and the base flood elevation (BFE). Taking the elevations of the Grand Canal bank and projecting them back in the neighborhood, perpendicular from the bank, determined BFE's used in the comparison.

The results of the comparison show that 3 of 22 houses met these criteria. The remaining lots surveyed were found to not be eligible for removal from the floodplain since the lowest adjacent grade to the structure were found to be below the BFE. Three structures was not surveyed due to the survey crew's inability to gain access to the property (Lot #65, 77, & 29). One other lot was not surveyed due to the property owner not wanting to participate in the Floodplain Certificate Program (Lot #43).

Visual results of this comparison can be viewed using **Exhibit 3**.

APPENDIX A

C.O.P. Floodplain Analysis

Offsite Hydrologic Analysis: HEC-1

FINAL DRAINAGE DESIGN REPORT
for
CONTRACT NO. 84-18
EAST PAPAGO (SR 217)
JUNCTION I-10 - 40TH STREET
EAST PAPAGO FREEWAY STORM DRAIN
PROJECT RAM-600-5-303

July 14, 1989

Prepared by:

A-N WEST, INC.
7600 North 15th Street, Suite 200
Phoenix, Arizona 85020
(602) 861-2200

A-N West Job No. 4601-03

Registered Professional Engineer (Civil)
CERTIFICATE NO.
15290
GREGORY
SCHUELKE
Date Signed 7/14/89
ARIZONA, U.S.A.

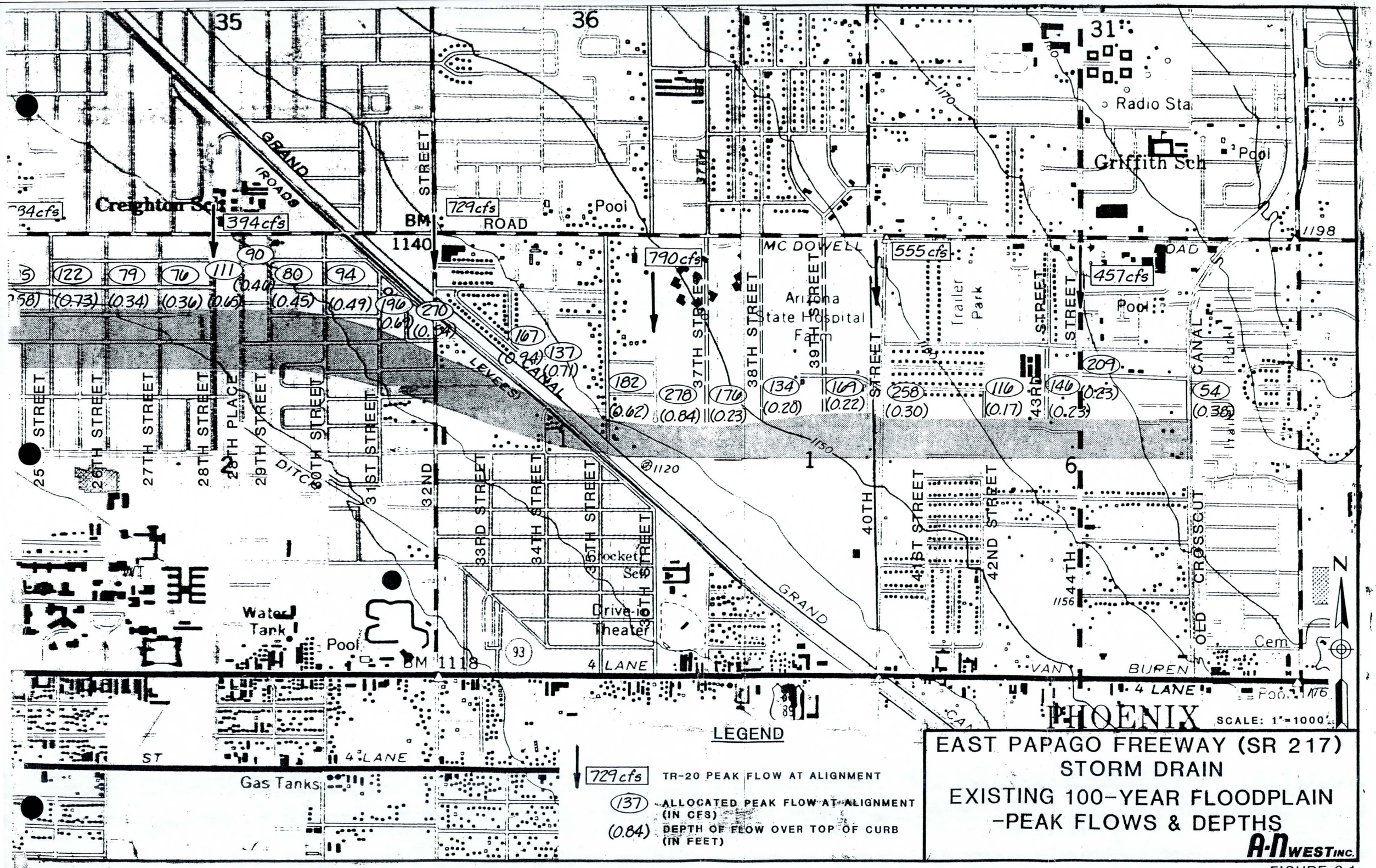
35
36
31
Radio Sta
Griffith Sch
Pool
Creighton Sch
394cfs
729cfs
790cfs
555cfs
457cfs
BM 1140
ROAD
MC DOWELL
GRAND
(ROADS)
LEVEES
CANAL
Arizona State Hospital Farm
Trailer Park
Park
1198
1170
1150
1120
1156
1118
1116
25
26TH STREET
27TH STREET
28TH STREET
28TH PLACE
29TH STREET
30TH STREET
31ST STREET
32ND STREET
33RD STREET
34TH STREET
35TH STREET
36TH STREET
37TH STREET
38TH STREET
39TH STREET
40TH STREET
41ST STREET
42ND STREET
43RD
44TH
DITCH
OLD CROSSCUT
Rocket Sch
Drive-in Theater
Water Tank
Gas Tanks
Cem
4 LANE
VAN BUREN
ST
90
122
79
76
111
(0.40)
80
94
(0.73)
(0.34)
(0.36)
(0.45)
(0.49)
196
(0.69)
270
(0.94)
167
137
(0.71)
182
(0.62)
278
(0.84)
176
(0.23)
134
(0.20)
169
(0.22)
258
(0.30)
116
(0.17)
146
(0.23)
209
(0.23)
54
(0.38)
93
89
N
PHOENIX
SCALE: 1"=1000'
LEGEND
729cfs TR-20 PEAK FLOW AT ALIGNMENT
137 ALLOCATED PEAK FLOW AT ALIGNMENT (IN CFS)
(0.84) DEPTH OF FLOW OVER TOP OF CURB (IN FEET)
EAST PAPAGO FREEWAY (SR 217)
STORM DRAIN
EXISTING 100-YEAR FLOODPLAIN
-PEAK FLOWS & DEPTHS
A-N WEST INC.

FIGURE 2.1

EAST PAPAGO FREEWAY (SR 217)
JUNCTION I-10 - GRAND CANAL
MARICOPA COUNTY

STORM DRAIN CURVE DATA								
CURVE	STATION	N. COORD.	E. COORD.	Δ	D	R	T	L
6	P.C. 76+09.16	895505.3836	471107.3290	10°23'35"	5°43'46"	1000.00	90.94	181.39
	P.I. 77+00.10	895484.5583	471195.8574					
	P.T. 77+90.55	895448.1044	471279.1766					

SCALE 100' 50' 0' 100' IN FEET

F.H.W.A. REGION	STATE	PROJECT NO.	SHEET NO.	TOTAL SHEETS	AS BUILT
9	ARIZ.	RAM-600-5-502	118		

6/3/67 DATE — A-N WEST, INC. FOR THE CONSULTING ENGINEER

DESIGN: G.A.S. DRAWN: P.S.S. CHECKED: L.L.T.

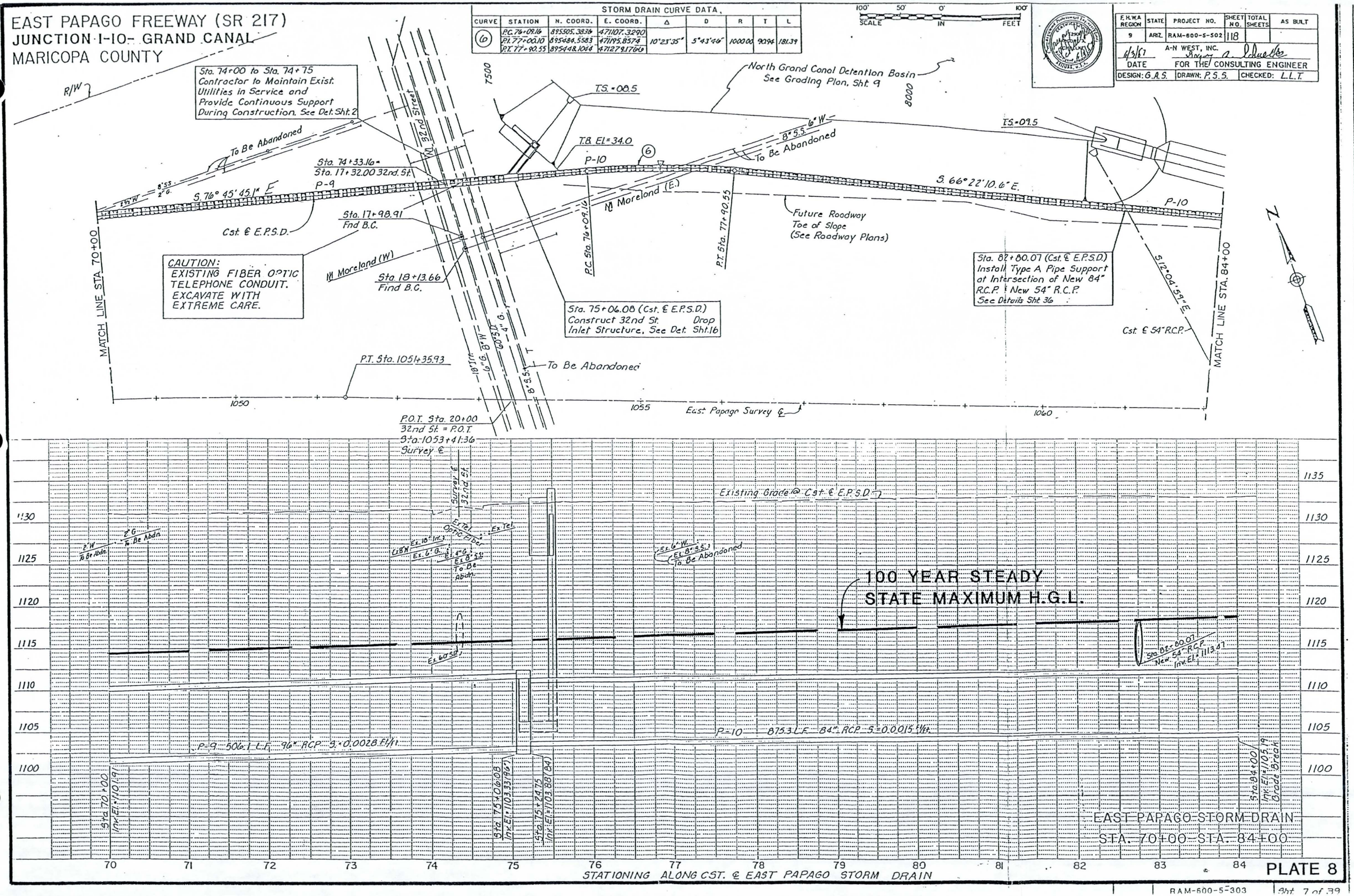

EAST PAPAGO STORM DRAIN
STA. 70+00 - STA. 84+00

PLATE 8

EAST PAPAGO FREEWAY (SR 217)
JUNCTION I-10- GRAND CANAL
MARICOPA COUNTY

FHWA REGION	STATE	PROJECT NO	SHEET NO	TOTAL SHEETS	AS BUILT
9	ARIZ	RAM-600-5-502	119		

6/3/17 DATE — A-N WEST, INC. FOR THE CONSULTING ENGINEER

DESIGN G.A.S. | DRAWN K.T.M. | CHECKED L.L.T.

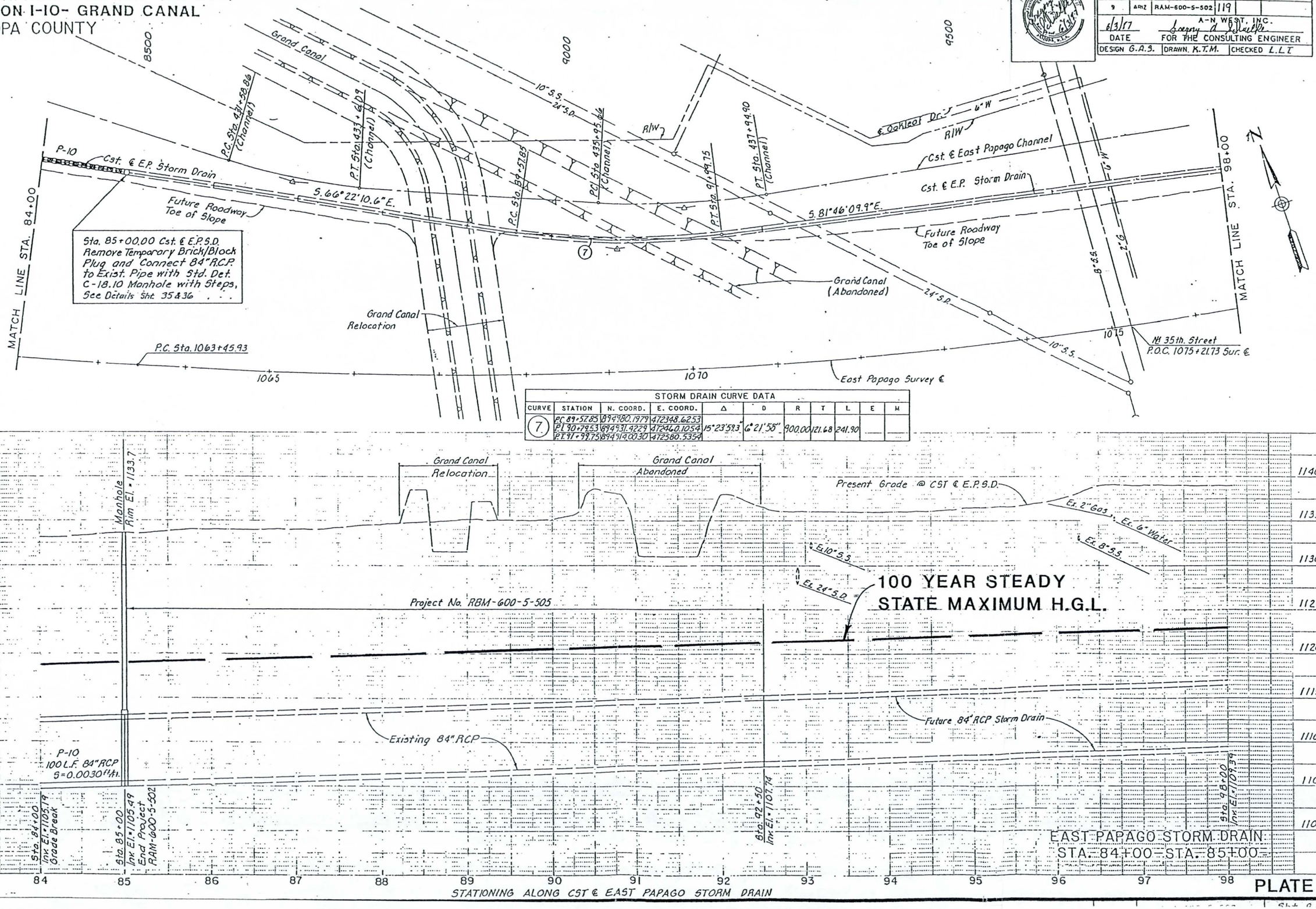

EAST PAPAGO STORM DRAIN
STA. 84+00 - STA. 85+00

PLATE 9

APPENDIX A - OFF-SITE HYDROLOGY AND DESIGN FLOWS

		Page
1.	100-Year Hydrographs from HNTB at Freeway	A 1 - A 16
2.	50-Year Hydrographs from HNTB at Freeway	A 17 - A 31
3.	10-, 25-, 50- and 100-Year Hydrographs from HNTB at Grand Canal and Freeway	A 32 - A 35
4.	Figure A-1 - TR-20 Schematic	A 36
5.	TR-20 Input and Output - 100-Year Storm With C.O.P. Storm Drains	A 37 - A 76
6.	Grand Canal Basin - Storage Volume/Discharge versus Elevation	A 77 - A 80
7.	State Land Basin South - Storage Volume versus Elevation	A 81 - A 82
8.	State Land Basin North - Storage Volume versus Elevation	A 83
9.	Divert Structure - Discharge versus Elevation	A 84 - A 85

Input assumed unsequenced
Read: DUA0:[KC1DIR]508006.IN;1 3/27/85 ANG Revd. 10-11-83 100-YR
R*P^C;*/*
00100 7 READHD 8 4 #1 (100-YR) 44TH Street inc Storm Drain HYD 4
00200 7 READHD 9 0.0000 0.1000 1.9028 0.0000

00300	8	0.0	0.00	0.00	0.00	0.00	0.00	1
00400	8		0.00	0.00	0.00	0.00	0.00	2
00500	8	1.0	0.00	0.00	0.00	0.00	0.00	3
00600	8		0.00	0.00	0.00	0.00	0.00	4
00700	8	2.0	0.00	0.00	0.00	0.00	0.00	5
00800	8		0.00	0.00	0.00	0.00	0.00	6
00900	8	3.0	0.00	0.00	0.00	0.00	0.00	7
01000	8		0.00	0.00	0.00	0.00	0.00	8
01100	8	4.0	0.00	0.00	0.00	0.00	0.00	9
01200	8	4.5	0.00	0.00	0.01	0.02	0.04	10
01300	8	5.0	0.05	0.07	0.08	0.10	0.12	11
01400	8		0.13	0.15	0.17	0.18	0.21	12
01500	8	6.0	0.23	0.26	0.29	0.32	0.34	13
01600	8		0.35	0.35	0.36	0.37	0.39	14
01700	8	7.0	0.41	0.45	0.48	0.51	0.52	15
01800	8		0.53	0.52	0.52	0.53	0.54	16
01900	8	8.0	0.57	0.61	0.64	0.67	0.69	17
02000	8		0.69	0.68	0.68	0.68	0.69	18
02100	8	9.0	0.73	0.77	0.82	0.90	1.07	19
02200	8		1.35	1.69	2.04	2.39	2.73	20
02300	8	10.0	3.08	3.44	3.79	4.12	4.41	21
02400	8		4.67	4.92	5.23	5.71	6.45	22
02500	8	11.0	7.39	8.49	9.78	11.30	13.12	23
02600	8		15.40	22.00	40.35	71.63	110.48	24
02700	8	12.0	154.11	198.50	240.20	279.35	329.42	25
02800	8		402.51	471.24	496.45	485.48	472.43	26
02900	8	13.0	478.56	490.27	491.34	477.86	456.31	27
03000	8		431.24	405.12	378.59	351.42	325.73	28
03100	8	14.0	306.61	294.97	286.42	279.05	271.86	29

03200	8		264.43	256.50	248.24	239.85	229.03	30
03300	8	15.0	213.03	195.55	177.75	160.52	144.46	31
03400	8		129.48	115.35	101.95	89.17	76.98	32
03500	8	16.0	65.43	54.57	44.55	34.44	23.47	33
03600	8		17.19	15.47	14.95	14.64	14.34	34
03700	8	17.0	14.05	13.81	13.74	13.80	13.94	35
03800	8		14.11	14.28	14.42	14.54	14.63	36
03900	8		14.68	14.65	14.47	14.17	13.84	37
04000	8		13.50	13.23	13.14	13.17	13.29	38
04100	8		13.42	13.52	13.47	13.29	13.05	39
04200	8		12.79	12.53	12.31	12.12	11.97	40
04300	8		11.85	11.81	11.93	12.15	12.42	41
04400	8		12.68	12.86	12.89	12.77	12.58	42
04500	8		12.35	12.18	12.16	12.26	12.43	43
04600	8		12.63	12.78	12.77	12.64	12.45	44
04700	8		12.23	12.06	12.05	12.16	12.34	45
04800	8		12.54	12.69	12.68	12.54	12.34	46
04900	8		12.12	11.90	11.70	11.53	11.40	47
05000	8		11.30	11.28	11.41	11.65	11.93	48
05100	8		12.22	12.22	11.54	10.30	8.89	49
05200	8		7.46	6.14	5.06	4.17	3.48	50
05300	8		2.97	2.62	2.39	2.23	2.12	51
05400	8		2.03	1.96	1.90	1.85	1.80	52
05500	8		1.75	1.70	1.66	1.62	1.58	53
05600	8		1.55	1.52	1.48	1.45	1.42	54
05700	8		1.38	1.34	1.31	1.28	1.25	55
05800	8		1.22	1.19	1.16	1.14	1.11	56
05900	8		1.09	1.07	1.04	1.02	0.99	57
06000	8		0.97	0.94	0.92	0.89	0.86	58
06100	8		0.84	0.81	0.78	0.75	0.73	59
06200	8		0.70	0.67	0.64	0.61	0.58	60
06300	9	FNDTBL						
06400	7	READHD 8	98	#3 (100-YR)	44TH St	Storm	Drain	HYD 98
06500	7	READHD 9		0.0000	0.1000	0.9514	0.0000	
06600	8			0.00	0.00	0.00	0.00	0.00 1
06700	8			0.00	0.00	0.00	0.00	0.00 2
06800	8			0.00	0.00	0.00	0.00	0.00 3
06900	8			0.00	0.00	0.00	0.00	0.00 4
07000	8			0.00	0.00	0.00	0.00	0.00 5
07100	8			0.00	0.00	0.00	0.00	0.00 6
07200	8			0.00	0.00	0.00	0.00	0.00 7
07300	8			0.00	0.00	0.00	0.00	0.00 8
07400	8			0.00	0.00	0.00	0.00	0.00 9
07500	8			0.00	0.00	0.01	0.02	0.04 10
07600	8			0.05	0.07	0.08	0.10	0.12 11
07700	8			0.13	0.15	0.17	0.18	0.21 12
07800	8			0.23	0.26	0.29	0.32	0.34 13
07900	8			0.35	0.35	0.36	0.37	0.39 14
08000	8			0.41	0.45	0.48	0.51	0.52 15
08100	8			0.53	0.52	0.52	0.53	0.54 16
08200	8			0.57	0.61	0.64	0.67	0.69 17
08300	8			0.69	0.68	0.68	0.68	0.69 18
08400	8			0.73	0.77	0.82	0.90	1.07 19
08500	8			1.35	1.69	2.04	2.39	2.73 20
08600	8			3.08	3.44	3.79	4.12	4.41 21
08700	8			4.67	4.92	5.23	5.71	6.45 22
08800	8			7.39	8.49	9.78	11.30	13.12 23
08900	8			15.40	22.00	39.00	39.00	39.00 24
09000	8			39.00	39.00	39.00	39.00	39.00 25
09100	8			39.00	39.00	39.00	39.00	39.00 26
09200	8			39.00	39.00	39.00	39.00	39.00 27
09300	8			39.00	39.00	39.00	39.00	39.00 28
09400	8			39.00	39.00	39.00	39.00	39.00 29
09500	8			39.00	39.00	39.00	39.00	39.00 30
09600	8			39.00	39.00	39.00	39.00	39.00 31

09700	8	39.00	39.00	39.00	39.00	39.00	32
09800	8	39.00	39.00	39.00	34.44	23.47	33
09900	8	17.19	15.47	14.95	14.64	14.34	34
10000	8	14.05	13.81	13.74	13.80	13.94	35
10100	8	14.11	14.28	14.42	14.54	14.63	36
10200	8	14.68	14.65	14.47	14.17	13.84	37
10300	8	13.50	13.23	13.14	13.17	13.29	38
10400	8	13.42	13.52	13.47	13.29	13.05	39
10500	8	12.79	12.53	12.31	12.12	11.97	40
10600	8	11.85	11.81	11.93	12.15	12.42	41
10700	8	12.68	12.86	12.89	12.77	12.58	42
10800	8	12.35	12.18	12.16	12.26	12.43	43
10900	8	12.63	12.78	12.77	12.64	12.45	44
11000	8	12.23	12.06	12.05	12.16	12.34	45
11100	8	12.54	12.69	12.68	12.54	12.34	46
11200	8	12.12	11.90	11.70	11.53	11.40	47
11300	8	11.30	11.28	11.41	11.65	11.93	48
11400	8	12.22	12.22	11.54	10.30	8.89	49
11500	8	7.46	6.14	5.06	4.17	3.48	50
11600	8	2.97	2.62	2.39	2.23	2.12	51
11700	8	2.03	1.96	1.90	1.85	1.80	52
11800	8	1.75	1.70	1.66	1.62	1.58	53
11900	8	1.55	1.52	1.48	1.45	1.42	54
12000	8	1.38	1.34	1.31	1.28	1.25	55
12100	8	1.22	1.19	1.16	1.14	1.11	56
12200	8	1.09	1.07	1.04	1.02	0.99	57
12300	8	0.97	0.94	0.92	0.89	0.86	58
12400	8	0.84	0.81	0.78	0.75	0.73	59
12500	8	0.70	0.67	0.64	0.61	0.58	60
12600	9 ENDTBL						
12700	7 READHD 8	25 #2 (100-YR)				HYD	25
12800	7 READHD 9	0.0000	0.1000	0.4757	0.0000		
12900	8	0.00	0.00	0.00	0.00	0.00	1
13000	8	0.00	0.00	0.00	0.00	0.00	2
13100	8	0.00	0.00	0.00	0.00	0.00	3
13200	8	0.00	0.00	0.00	0.00	0.00	4
13300	8	0.00	0.00	0.00	0.00	0.00	5
13400	8	0.00	0.00	0.00	0.00	0.00	6
13500	8	0.00	0.00	0.00	0.00	0.00	7
13600	8	0.00	0.00	0.00	0.00	0.00	8
13700	8	0.00	0.00	0.00	0.00	0.00	9
13800	8	0.00	0.00	0.00	0.00	0.00	10
13900	8	0.00	0.00	0.00	0.00	0.00	11
14000	8	0.00	0.00	0.00	0.00	0.00	12
14100	8	0.00	0.00	0.00	0.00	0.00	13
14200	8	0.00	0.00	0.00	0.00	0.00	14
14300	8	0.00	0.00	0.00	0.00	0.00	15
14400	8	0.00	0.00	0.00	0.00	0.00	16
14500	8	0.00	0.00	0.00	0.00	0.00	17
14600	8	0.00	0.00	0.00	0.00	0.00	18
14700	8	0.00	0.00	0.00	0.00	0.00	19
14800	8	0.00	0.00	0.00	0.00	0.00	20
14900	8	0.00	0.00	0.00	0.00	0.00	21
15000	8	0.00	0.00	0.00	0.00	0.00	22
15100	8	0.00	0.00	0.00	0.00	0.00	23
15200	8	0.00	0.00	1.35	32.63	71.48	24
15300	8	115.11	159.50	201.20	240.35	290.42	25
15400	8	363.51	432.24	457.45	446.48	433.43	26
15500	8	439.56	451.27	452.34	438.86	417.31	27
15600	8	392.24	366.12	339.59	312.42	286.73	28
15700	8	267.61	255.97	247.42	240.05	232.86	29
15800	8	225.43	217.50	209.24	200.85	190.03	30
15900	8	174.03	156.55	138.75	121.52	105.46	31
16000	8	90.48	76.35	62.95	50.17	37.98	32
16100	8	26.43	15.57	5.55	0.00	0.00	33
16200	9 ENDTBL						

16300	7	READHD 8	2	#4 (100-YR) 40TH Street incl. Storm Drain			HYD	2
16400	7	READHD 9		0.0000	0.1000	2.3527	0.0000	
16500	8			0.00	0.00	0.00	0.00	0.00	1
16600	8			0.00	0.00	0.00	0.00	0.00	2
16700	8		1.0	0.00	0.00	0.00	0.00	0.00	3
16800	8			0.00	0.00	0.00	0.00	0.00	4
16900	8		2.0	0.00	0.00	0.00	0.00	0.00	5
17000	8			0.00	0.00	0.00	0.00	0.00	6
17100	8		3.0	0.00	0.00	0.00	0.00	0.00	7
17200	8			0.00	0.00	0.00	0.00	0.00	8
17300	8		4.0	0.00	0.00	0.00	0.00	0.00	9
17400	8			0.00	0.00	0.01	0.02	0.03	10
17500	8		5.0	0.04	0.05	0.06	0.07	0.08	11
17600	8			0.09	0.11	0.13	0.16	0.19	12
17700	8		6.0	0.23	0.27	0.31	0.34	0.37	13
17800	8			0.38	0.40	0.41	0.44	0.47	14
17900	8		7.0	0.52	0.56	0.61	0.64	0.67	15
18000	8			0.68	0.69	0.71	0.74	0.80	16
18100	8		8.0	0.88	0.97	1.05	1.12	1.17	17
18200	8			1.19	1.22	1.26	1.33	1.45	18
18300	8		9.0	1.60	1.78	2.07	2.57	3.39	19
18400	8			4.47	5.67	6.88	8.07	9.27	20
18500	8		10.0	10.50	11.74	12.95	14.08	15.13	21
18600	8			16.15	17.23	18.65	20.65	23.35	22
18700	8		11.0	26.62	30.31	34.49	39.43	45.26	23
18800	8			52.58	69.90	122.91	234.90	392.52	24
18900	8		12.0	492.83	560.13	625.53	686.37	740.55	25
19000	8			794.55	838.00	845.44	819.33	780.05	26
19100	8		13.0	748.47	724.79	707.00	687.11	663.07	27
19200	8			637.64	613.00	589.85	568.61	548.97	28
19300	8		14.0	531.36	517.78	508.71	501.98	496.10	29
19400	8			490.01	482.45	472.78	461.27	446.92	30
19500	8		15.0	429.81	411.68	390.15	353.14	315.36	31
19600	8			281.05	249.30	220.53	195.08	172.55	32
19700	8		16.0	152.41	134.36	118.23	103.90	93.88	33
19800	8			89.13	86.96	85.24	83.47	81.63	34
19900	8		17.0	79.77	78.14	76.99	76.40	76.28	35
20000	8			76.47	76.76	76.98	77.02	76.89	36
20100	8		18.0	76.61	76.17	75.44	74.43	73.19	37
20200	8			71.81	70.50	69.53	69.00	68.85	38
20300	8		19.0	68.94	69.07	68.92	68.39	67.53	39
20400	8			66.45	65.33	64.33	63.52	62.89	40
20500	8		20.0	62.40	62.08	62.04	62.28	62.74	41
20600	8			63.33	63.85	64.01	63.74	63.10	42
20700	8		21.0	62.25	61.43	60.96	60.93	61.29	43
20800	8			61.91	62.51	62.79	62.62	62.07	44
20900	8		22.0	61.27	60.48	60.01	59.97	60.30	45
21000	8			60.87	61.42	61.63	61.41	60.81	46
21100	8			59.97	59.06	58.24	57.62	57.18	47
21200	8			56.87	56.73	56.87	57.28	57.92	48
21300	8			58.63	58.92	57.86	55.33	51.62	49
21400	8			47.13	42.52	38.49	35.42	33.21	50
21500	8			31.59	30.30	29.17	28.10	27.04	51
21600	8			26.01	25.02	24.09	23.23	22.46	52
21700	8			21.78	21.18	20.65	20.18	19.73	53
21800	8			19.30	18.87	18.44	18.03	17.64	54
21900	8			17.28	16.95	16.63	16.34	16.07	55
22000	8			15.81	15.56	15.31	15.07	14.84	56
22100	8			14.60	14.36	14.12	13.87	13.62	57
22200	8			13.37	13.12	12.85	12.59	12.32	58
22300	8			12.04	11.76	11.47	11.18	10.89	59
22400	8			10.61	10.33	9.96	9.23	8.50	60
22500	9	ENDTBL							
22600	7	READHD 8	96	#6 (100-YR) 40TH St Storm Drain				HYD	96
22700	7	READHD 9		0.0000	0.1000	1.4142	0.0000		
22800	8			0.00	0.00	0.00	0.00	0.00	1

22900	8	0.00	0.00	0.00	0.00	0.00	2
23000	8	0.00	0.00	0.00	0.00	0.00	3
23100	8	0.00	0.00	0.00	0.00	0.00	4
23200	8	0.00	0.00	0.00	0.00	0.00	5
23300	8	0.00	0.00	0.00	0.00	0.00	6
23400	8	0.00	0.00	0.00	0.00	0.00	7
23500	8	0.00	0.00	0.00	0.00	0.00	8
23600	8	0.00	0.00	0.00	0.00	0.00	9
23700	8	0.00	0.00	0.01	0.02	0.03	10
23800	8	0.04	0.05	0.06	0.07	0.08	11
23900	8	0.09	0.11	0.13	0.16	0.19	12
24000	8	0.23	0.27	0.31	0.34	0.37	13
24100	8	0.38	0.40	0.41	0.44	0.47	14
24200	8	0.52	0.56	0.61	0.64	0.67	15
24300	8	0.68	0.69	0.71	0.74	0.80	16
24400	8	0.88	0.97	1.05	1.12	1.17	17
24500	8	1.19	1.22	1.26	1.33	1.45	18
24600	8	1.60	1.78	2.07	2.57	3.39	19
24700	8	4.47	5.67	6.88	8.07	9.27	20
24800	8	10.50	11.74	12.95	14.08	15.13	21
24900	8	16.15	17.23	18.65	20.65	23.35	22
25000	8	26.62	30.31	34.49	39.43	45.26	23
25100	8	52.58	69.90	123.25	244.04	290.00	24
25200	8	290.00	290.00	290.00	290.00	290.00	25
25300	8	290.00	290.00	290.00	290.00	290.00	26
25400	8	290.00	290.00	290.00	290.00	290.00	27
25500	8	290.00	290.00	290.00	290.00	290.00	28
25600	8	290.00	290.00	290.00	290.00	290.00	29
25700	8	290.00	290.00	290.00	290.00	290.00	30
25800	8	290.00	290.00	290.00	290.00	290.00	31
25900	8	290.00	290.00	290.00	256.10	220.88	32
26000	8	188.66	159.17	132.33	109.02	94.47	33
26100	8	89.20	86.96	85.24	83.47	81.63	34
26200	8	79.77	78.14	76.99	76.40	76.28	35
26300	8	76.47	76.76	76.98	77.02	76.89	36
26400	8	76.61	76.17	75.44	74.43	73.19	37
26500	8	71.81	70.50	69.53	69.00	68.85	38
26600	8	68.94	69.07	68.92	68.39	67.53	39
26700	8	66.45	65.33	64.33	63.52	62.89	40
26800	8	62.40	62.08	62.04	62.28	62.74	41
26900	8	63.33	63.85	64.01	63.74	63.10	42
27000	8	62.25	61.43	60.96	60.93	61.29	43
27100	8	61.91	62.51	62.79	62.62	62.07	44
27200	8	61.27	60.48	60.01	59.97	60.30	45
27300	8	60.87	61.42	61.63	61.41	60.81	46
27400	8	59.97	59.06	58.24	57.62	57.18	47
27500	8	56.87	56.73	56.87	57.28	57.92	48
27600	8	58.63	58.92	57.86	55.33	51.62	49
27700	8	47.13	42.52	38.49	35.42	33.21	50
27800	8	31.59	30.30	29.17	28.10	27.04	51
27900	8	26.01	25.02	24.09	23.23	22.46	52
28000	8	21.78	21.18	20.65	20.18	19.73	53
28100	8	19.30	18.87	18.44	18.03	17.64	54
28200	8	17.28	16.95	16.63	16.34	16.07	55
28300	8	15.81	15.56	15.31	15.07	14.84	56
28400	8	14.60	14.36	14.12	13.87	13.62	57
28500	8	13.37	13.12	12.85	12.59	12.32	58
28600	8	12.04	11.76	11.47	11.18	10.89	59
28700	8	10.61	10.33	9.96	9.23	8.50	60
28800	9 ENDTBL						
28900	7 READHD 8	32 #5 (100-YR)				HYD	32
29000	7 READHD 9	0.0000	0.1000	0.7071	0.0000		
29100	8	0.00	0.00	0.00	0.00	0.00	1
29200	8	0.00	0.00	0.00	0.00	0.00	2
29300	8	0.00	0.00	0.00	0.00	0.00	3

29400	8		0.00	0.00	0.00	0.00	0.00	4
29500	8		0.00	0.00	0.00	0.00	0.00	5
29600	8		0.00	0.00	0.00	0.00	0.00	6
29700	8		0.00	0.00	0.00	0.00	0.00	7
29800	8		0.00	0.00	0.00	0.00	0.00	8
29900	8		0.00	0.00	0.00	0.00	0.00	9
30000	8		0.00	0.00	0.00	0.00	0.00	10
30100	8		0.00	0.00	0.00	0.00	0.00	11
30200	8		0.00	0.00	0.00	0.00	0.00	12
30300	8		0.00	0.00	0.00	0.00	0.00	13
30400	8		0.00	0.00	0.00	0.00	0.00	14
30500	8		0.00	0.00	0.00	0.00	0.00	15
30600	8		0.00	0.00	0.00	0.00	0.00	16
30700	8		0.00	0.00	0.00	0.00	0.00	17
30800	8		0.00	0.00	0.00	0.00	0.00	18
30900	8		0.00	0.00	0.00	0.00	0.00	19
31000	8		0.00	0.00	0.00	0.00	0.00	20
31100	8		0.00	0.00	0.00	0.00	0.00	21
31200	8		0.00	0.00	0.00	0.00	0.00	22
31300	8		0.00	0.00	0.00	0.00	0.00	23
31400	8		0.00	0.00	0.00	0.00	142.29	24
31500	8		281.72	392.33	501.32	603.43	699.76	25
31600	8		808.75	922.12	987.43	981.11	933.84	26
31700	8		894.64	876.92	867.50	845.84	807.61	27
31800	8		760.57	710.99	661.76	613.87	567.50	28
31900	8		525.74	494.36	473.73	458.41	445.06	29
32000	8		431.68	416.59	398.95	379.18	355.84	30
32100	8		326.81	292.77	253.86	199.25	144.48	31
32200	8		94.28	47.67	4.87	0.00	0.00	32
32300	9	ENDTBL						
32400	7	READHD 8	2 #7 (100-YR) 36th Street incl Storm Drain				HYD	2
32500	7	READHD 9	0.0000	0.1000	1.9432	0.0000		
32600	8		0.00	0.00	0.00	0.00	0.00	1
32700	8		0.00	0.00	0.00	0.00	0.00	2
32800	8	1.0	0.00	0.00	0.00	0.00	0.00	3
32900	8		0.00	0.00	0.00	0.00	0.00	4
33000	8	2.0	0.00	0.00	0.00	0.00	0.00	5
33100	8		0.00	0.00	0.00	0.00	0.00	6
33200	8	3.0	0.00	0.00	0.00	0.00	0.00	7
33300	8		0.00	0.00	0.00	0.00	0.00	8
33400	8	4.0	0.00	0.00	0.00	0.00	0.00	9
33500	8		0.00	0.00	0.00	0.00	0.00	10
33600	8	5.0	0.00	0.00	0.00	0.00	0.00	11
33700	8		0.00	0.00	0.00	0.00	0.00	12
33800	8	6.0	0.00	0.00	0.00	0.00	0.00	13
33900	8		0.00	0.00	0.00	0.00	0.00	14
34000	8	7.0	0.00	0.00	0.00	0.00	0.01	15
34100	8		0.02	0.03	0.05	0.08	0.11	16
34200	8	8.0	0.14	0.18	0.22	0.25	0.28	17
34300	8		0.30	0.32	0.34	0.38	0.42	18
34400	8	9.0	0.48	0.55	0.66	0.84	1.13	19
34500	8		1.50	1.91	2.33	2.77	3.27	20
34600	8	10.0	3.83	4.45	5.09	5.72	6.32	21
34700	8		6.92	7.57	8.43	9.58	11.06	22
34800	8	11.0	12.81	14.88	17.44	20.62	24.31	23
34900	8		28.54	41.19	76.80	146.85	251.33	24
35000	8	12.0	355.82	433.74	506.56	584.76	660.34	25
35100	8		727.95	777.81	789.74	772.60	741.25	26
35200	8	13.0	706.72	667.27	626.53	588.28	550.55	27
35300	8		512.63	475.84	441.95	412.59	388.33	28
35400	8	14.0	368.33	351.69	338.48	328.67	321.01	29
35500	8		314.24	306.68	293.88	272.72	242.31	30
35600	8	15.0	203.13	165.88	133.41	104.70	82.72	31
35700	8		69.89	60.43	52.23	45.28	39.85	32
35800	8	16.0	35.99	33.43	31.85	30.96	30.50	33
35900	8		30.31	30.24	30.10	29.78	29.25	34
36000	8		28.55	27.78	27.14	26.75	26.66	35

36100	8		26.85	27.25	27.77	28.28	28.69	36
36200	8		28.96	29.06	28.93	28.58	28.07	37
36300	8		27.45	26.83	26.35	26.13	26.20	38
36400	8		26.51	26.94	27.30	27.46	27.36	39
36500	8		27.02	26.49	25.88	25.30	24.83	40
36600	8		24.52	24.38	24.49	24.82	25.33	41
36700	8		25.94	26.55	27.02	27.23	27.17	42
36800	8		26.86	26.43	26.07	25.92	26.03	43
36900	8		26.38	26.85	27.23	27.41	27.34	44
37000	8		27.03	26.59	26.22	26.06	26.15	45
37100	8		26.48	26.93	27.32	27.49	27.41	46
37200	8		27.08	26.58	25.98	25.40	24.94	47
37300	8		24.63	24.50	24.61	24.96	25.46	48
37400	8		26.04	26.40	25.93	24.52	22.24	49
37500	8		19.31	15.90	12.36	9.17	6.66	50
37600	8		4.91	3.77	3.04	2.55	2.19	51
37700	8		1.90	1.64	1.40	1.20	1.01	52
37800	8		0.85	0.71	0.59	0.49	0.40	53
37900	8		0.33	0.28	0.23	0.19	0.16	54
38000	8		0.13	0.11	0.09	0.07	0.06	55
38100	8		0.05	0.04	0.03	0.03	0.00	56
38200	9	ENDTBL						
38300	7	READHD 8	95	#9 (100-YR) 36TH St. Storm Drain			HYD	95
38400	7	READHD 9		0.0000	0.1000	1.3251	0.0000	
38500	8			0.00	0.00	0.00	0.00	0.00	1
38600	8			0.00	0.00	0.00	0.00	0.00	2
38700	8			0.00	0.00	0.00	0.00	0.00	3
38800	8			0.00	0.00	0.00	0.00	0.00	4
38900	8			0.00	0.00	0.00	0.00	0.00	5
39000	8			0.00	0.00	0.00	0.00	0.00	6
39100	8			0.00	0.00	0.00	0.00	0.00	7
39200	8			0.00	0.00	0.00	0.00	0.00	8
39300	8			0.00	0.00	0.00	0.00	0.00	9
39400	8			0.00	0.00	0.00	0.00	0.00	10
39500	8			0.00	0.00	0.00	0.00	0.00	11
39600	8			0.00	0.00	0.00	0.00	0.00	12
39700	8			0.00	0.00	0.00	0.00	0.00	13
39800	8			0.00	0.00	0.00	0.00	0.00	14
39900	8			0.00	0.00	0.00	0.00	0.01	15
40000	8			0.02	0.03	0.05	0.08	0.11	16
40100	8			0.14	0.18	0.22	0.25	0.28	17
40200	8			0.30	0.32	0.34	0.38	0.42	18
40300	8			0.48	0.55	0.66	0.84	1.13	19
40400	8			1.50	1.91	2.33	2.77	3.27	20
40500	8			3.83	4.45	5.09	5.72	6.32	21
40600	8			6.92	7.57	8.43	9.58	11.06	22
40700	8			12.81	14.88	17.44	20.62	24.31	23
40800	8			28.54	41.19	76.80	146.85	251.00	24
40900	8			251.00	251.00	251.00	251.00	251.00	25
41000	8			251.00	251.00	251.00	251.00	251.00	26
41100	8			251.00	251.00	251.00	251.00	251.00	27
41200	8			251.00	251.00	251.00	251.00	251.00	28
41300	8			251.00	251.00	251.00	251.00	251.00	29
41400	8			251.00	251.00	251.00	251.00	251.00	30
41500	8			251.00	251.00	251.00	251.00	251.00	31
41600	8			214.33	154.71	99.98	55.45	41.29	32
41700	8			36.19	33.43	31.85	30.96	30.50	33
41800	8			30.31	30.24	30.10	29.78	29.25	34
41900	8			28.55	27.78	27.14	26.75	26.66	35
42000	8			26.85	27.25	27.77	28.28	28.69	36
42100	8			28.96	29.06	28.93	28.58	28.07	37
42200	8			27.45	26.83	26.35	26.13	26.20	38
42300	8			26.51	26.94	27.30	27.46	27.36	39
42400	8			27.02	26.49	25.88	25.30	24.83	40
42500	8			24.52	24.38	24.49	24.82	25.33	41
42600	8			25.94	26.55	27.02	27.23	27.17	42
42700	8			26.86	26.43	26.07	25.92	26.03	43

42800	8		26.38	26.85	27.23	27.41	27.34	44
42900	8		27.03	26.59	26.22	26.06	26.15	45
43000	8		26.48	26.93	27.32	27.49	27.41	46
43100	8		27.08	26.58	25.98	25.40	24.94	47
43200	8		24.63	24.50	24.61	24.96	25.46	48
43300	8		26.04	26.40	25.93	24.52	22.24	49
43400	8		19.31	15.90	12.36	9.17	6.66	50
43500	8		4.91	3.77	3.04	2.55	2.19	51
43600	8		1.90	1.64	1.40	1.20	1.01	52
43700	8		0.85	0.71	0.59	0.49	0.40	53
43800	8		0.33	0.28	0.23	0.19	0.16	54
43900	8		0.13	0.11	0.09	0.07	0.06	55
44000	8		0.05	0.04	0.03	0.03	0.00	56
44100	9	ENDTBL						
44200	7	READHD 8	40	#8 (100-YR)			HYD	40
44300	7	READHD 9	0.0000	0.1000	1.3251	0.0000		
44400	8		0.00	0.00	0.00	0.00	0.00	1
44500	8		0.00	0.00	0.00	0.00	0.00	2
44600	8		0.00	0.00	0.00	0.00	0.00	3
44700	8		0.00	0.00	0.00	0.00	0.00	4
44800	8		0.00	0.00	0.00	0.00	0.00	5
44900	8		0.00	0.00	0.00	0.00	0.00	6
45000	8		0.00	0.00	0.00	0.00	0.00	7
45100	8		0.00	0.00	0.00	0.00	0.00	8
45200	8		0.00	0.00	0.00	0.00	0.00	9
45300	8		0.00	0.00	0.00	0.00	0.00	10
45400	8		0.00	0.00	0.00	0.00	0.00	11
45500	8		0.00	0.00	0.00	0.00	0.00	12
45600	8		0.00	0.00	0.00	0.00	0.00	13
45700	8		0.00	0.00	0.00	0.00	0.00	14
45800	8		0.00	0.00	0.00	0.00	0.00	15
45900	8		0.00	0.00	0.00	0.00	0.00	16
46000	8		0.00	0.00	0.00	0.00	0.00	17
46100	8		0.00	0.00	0.00	0.00	0.00	18
46200	8		0.00	0.00	0.00	0.00	0.00	19
46300	8		0.00	0.00	0.00	0.00	0.00	20
46400	8		0.00	0.00	0.00	0.00	0.00	21
46500	8		0.00	0.00	0.00	0.00	0.00	22
46600	8		0.00	0.00	0.00	0.00	0.00	23
46700	8		0.00	0.00	0.00	0.00	21.90	24
46800	8		251.24	462.17	648.51	835.29	1013.02	25
46900	8		1179.69	1337.81	1455.10	1498.06	1463.54	26
47000	8		1389.17	1313.69	1253.91	1203.03	1142.40	27
47100	8		1067.08	984.22	901.29	822.94	750.86	28
47200	8		684.99	627.58	583.30	552.19	528.67	29
47300	8		508.18	486.94	458.86	420.08	369.66	30
47400	8		306.74	240.44	173.90	104.58	29.94	31
47500	8		0.00	0.00	0.00	0.00	0.00	32
47600	9	ENDTBL						
47700	7	READHD 8	93	#10 (100-YR)	—32ND Street	incl. Storm Drain	HYD	93
47800	7	READHD 9	0.0000	0.1000	1.6417	0.0000		
47900	8		0.00	0.00	0.00	0.00	0.00	1
48000	8		0.00	0.00	0.00	0.00	0.00	2
48100	8		0.00	0.00	0.00	0.00	0.00	3
48200	8		0.00	0.00	0.00	0.00	0.00	4
48300	8		0.00	0.00	0.00	0.00	0.00	5
48400	8		0.00	0.00	0.00	0.00	0.00	6
48500	8		0.00	0.00	0.00	0.00	0.00	7
48600	8		0.00	0.00	0.00	0.00	0.00	8
48700	8		0.00	0.00	0.00	0.00	0.00	9
48800	8		0.00	0.00	0.00	0.00	0.00	10
48900	8		0.00	0.00	0.00	0.00	0.00	11
49000	8		0.00	0.00	0.00	0.00	0.00	12
49100	8		0.00	0.00	0.00	0.00	0.00	13
49200	8		0.00	0.00	0.00	0.00	0.00	14

49300	8	70 - 0.00	0.00	0.00	0.00	0.00	15
49400	8	0.00	0.00	0.00	0.00	0.00	16
49500	8	0.00	0.00	0.00	0.00	0.01	17
49600	8	0.03	0.05	0.07	0.10	0.13	18
49700	8	0.17	0.22	0.29	0.41	0.60	19
49800	8	0.84	1.13	1.46	1.87	2.40	20
49900	8	3.06	3.83	4.66	5.54	6.44	21
50000	8	7.34	8.34	9.61	11.25	13.25	22
50100	8	15.56	18.24	21.54	25.51	30.06	23
50200	8	35.93	52.73	105.56	201.49	290.01	24
50300	8	366.60	444.46	532.62	631.41	734.59	25
50400	8	833.17	906.75	929.69	918.95	893.96	26
50500	8	859.67	810.04	750.88	688.37	625.27	27
50600	8	562.47	501.23	444.45	395.39	355.65	28
50700	8	324.65	300.63	282.11	267.90	256.27	29
50800	8	244.54	227.58	200.88	163.32	125.70	30
50900	8	102.27	90.39	82.42	74.42	65.91	31
51000	8	57.07	48.48	40.92	35.00	30.89	32
51100	8	28.32	26.90	26.38	26.49	26.98	33
51200	8	27.69	28.39	28.80	28.82	28.49	34
51300	8	27.90	27.28	26.92	26.94	27.31	35
51400	8	27.93	28.68	29.41	30.00	30.43	36
51500	8	30.69	30.74	30.49	29.94	29.20	37
51600	8	28.36	27.59	27.13	27.10	27.43	38
51700	8	28.03	28.67	29.04	29.02	28.65	39
51800	8	28.03	27.29	26.58	26.00	25.58	40
51900	8	25.33	25.28	25.55	26.11	26.87	41
52000	8	27.73	28.52	28.97	29.01	28.68	42
52100	8	28.10	27.47	27.12	27.15	27.52	43
52200	8	28.13	28.78	29.15	29.14	28.77	44
52300	8	28.17	27.53	27.17	27.19	27.56	45
52400	8	28.17	28.81	29.18	29.18	28.82	46
52500	8	28.21	27.47	26.75	26.15	25.73	47
52600	8	25.47	25.43	25.69	26.25	27.02	48
52700	8	27.88	28.25	27.30	24.85	21.34	49
52800	8	17.16	12.79	8.79	5.61	3.37	50
52900	8	1.95	1.11	0.63	0.35	0.18	51
53000	8	0.08	0.02	0.00	0.00	0.00	52
53100	9 ENDTBL						
53200	7 READHD 8	97 #12 (100-YR) 32ND St Storm Drain				HYD	97
53300	7 READHD 9	0.0000	0.1000	1.4834	0.0000		
53400	8	0.00	0.00	0.00	0.00	0.00	1
53500	8	0.00	0.00	0.00	0.00	0.00	2
53600	8	0.00	0.00	0.00	0.00	0.00	3
53700	8	0.00	0.00	0.00	0.00	0.00	4
53800	8	0.00	0.00	0.00	0.00	0.00	5
53900	8	0.00	0.00	0.00	0.00	0.00	6
54000	8	0.00	0.00	0.00	0.00	0.00	7
54100	8	0.00	0.00	0.00	0.00	0.00	8
54200	8	0.00	0.00	0.00	0.00	0.00	9
54300	8	0.00	0.00	0.00	0.00	0.00	10
54400	8	0.00	0.00	0.00	0.00	0.00	11
54500	8	0.00	0.00	0.00	0.00	0.00	12
54600	8	0.00	0.00	0.00	0.00	0.00	13
54700	8	0.00	0.00	0.00	0.00	0.00	14
54800	8	0.00	0.00	0.00	0.00	0.00	15
54900	8	0.00	0.00	0.00	0.00	0.00	16
55000	8	0.00	0.00	0.00	0.00	0.01	17
55100	8	0.03	0.05	0.07	0.10	0.13	18
55200	8	0.17	0.22	0.29	0.41	0.60	19
55300	8	0.84	1.13	1.46	1.87	2.40	20
55400	8	3.06	3.83	4.66	5.54	6.44	21
55500	8	7.34	8.34	9.61	11.25	13.25	22
55600	8	15.56	18.24	21.54	25.51	30.06	23
55700	8	35.93	52.73	105.56	201.00	201.00	24
55800	8	201.00	201.00	201.00	201.00	201.00	25
55900	8	201.00	201.00	201.00	201.00	201.00	26

03500	8	0.00	0.00	0.00	0.00	0.00	5
03600	8	0.00	0.00	0.00	0.00	0.00	6
03700	8	0.00	0.00	0.00	0.00	0.00	7
03800	8	0.00	0.00	0.00	0.00	0.00	8
03900	8	0.00	0.00	0.00	0.00	0.00	9
04000	8	0.00	0.00	0.00	0.00	0.00	10
04100	8	0.00	0.00	0.00	0.00	0.00	11
04200	8	0.00	0.00	0.00	0.00	0.00	12
04300	8	0.00	0.00	0.00	0.00	0.00	13
04400	8	0.00	0.00	0.00	0.00	0.00	14
04500	8	0.00	0.00	0.00	0.00	0.00	15
04600	8	0.00	0.00	0.00	0.00	0.00	16
04700	8	0.00	0.00	0.00	0.00	0.00	17
04800	8	0.00	0.01	0.02	0.04	0.06	18
04900	8	0.09	0.15	0.27	0.44	0.68	19
05000	8	0.98	1.36	1.80	2.32	2.90	20
05100	8	3.54	4.22	4.93	5.64	6.33	21
05200	8	6.99	7.76	8.82	10.05	11.54	22
05300	8	13.29	15.47	18.28	21.43	24.95	23
05400	8	29.31	46.10	92.99	167.74	236.00	24
05500	8	236.00	236.00	236.00	236.00	236.00	25
05600	8	236.00	236.00	236.00	236.00	236.00	26
05700	8	236.00	236.00	236.00	236.00	236.00	27
05800	8	236.00	236.00	236.00	236.00	236.00	28
05900	8	236.00	236.00	236.00	236.00	236.00	29
06000	8	236.00	236.00	236.00	236.00	236.00	30
06100	8	236.00	236.00	236.00	236.00	167.18	31
06200	8	109.99	93.28	83.88	76.97	71.64	32
06300	8	67.59	64.59	62.45	60.86	59.70	33
06400	8	58.83	58.04	57.11	56.00	54.69	34
06500	8	53.18	51.66	50.37	49.29	48.51	35
06600	8	47.99	47.64	47.33	46.98	46.54	36
06700	8	46.02	45.33	44.41	43.35	42.17	37
06800	8	40.88	39.66	38.70	37.99	37.57	38
06900	8	37.42	37.33	37.10	36.69	36.03	39
07000	8	35.16	34.18	33.19	32.30	31.54	40
07100	8	30.92	30.49	30.33	30.34	30.54	41
07200	8	30.86	31.15	31.23	31.08	30.66	42
07300	8	30.00	29.31	28.80	28.49	28.46	43
07400	8	28.65	28.89	28.96	28.83	28.46	44
07500	8	27.87	27.24	26.80	26.55	26.58	45
07600	8	26.86	27.16	27.29	27.23	26.92	46
07700	8	26.37	25.71	25.04	24.43	23.95	47
07800	8	23.59	23.41	23.50	23.77	24.20	48
07900	8	24.76	24.91	24.02	22.38	19.91	49
08000	8	16.75	13.33	10.07	7.31	5.24	50
08100	8	3.83	2.91	2.34	1.96	1.72	51
08200	8	1.56	1.44	1.35	1.29	1.25	52
08300	8	1.20	1.16	1.12	1.08	1.04	53
08400	8	1.01	0.97	0.94	0.90	0.87	54
08500	8	0.84	0.81	0.78	0.76	0.73	55
08600	8	0.70	0.68	0.65	0.63	0.61	56
08700	8	0.59	0.57	0.55	0.53	0.51	57
08800	8	0.49	0.47	0.46	0.44	0.42	58
08900	8	0.41	0.40	0.38	0.37	0.36	59
09000	8	0.29	0.04	0.00	0.00	0.00	60
09100	9	ENDTBL					
09200	7	READHD 8 66 #14 (100-YR)				HYD	66
09300	7	READHD 9 0.0000	0.1000	1.1838	0.0000		
09400	8	0.00	0.00	0.00	0.00	0.00	1
09500	8	0.00	0.00	0.00	0.00	0.00	2
09600	8	0.00	0.00	0.00	0.00	0.00	3
09700	8	0.00	0.00	0.00	0.00	0.00	4
09800	8	0.00	0.00	0.00	0.00	0.00	5
09900	8	0.00	0.00	0.00	0.00	0.00	6

10000	8	0.00	0.00	0.00	0.00	0.00	7
10100	8	0.00	0.00	0.00	0.00	0.00	8
10200	8	0.00	0.00	0.00	0.00	0.00	9
10300	8	0.00	0.00	0.00	0.00	0.00	10
10400	8	0.00	0.00	0.00	0.00	0.00	11
10500	8	0.00	0.00	0.00	0.00	0.00	12
10600	8	0.00	0.00	0.00	0.00	0.00	13
10700	8	0.00	0.00	0.00	0.00	0.00	14
10800	8	0.00	0.00	0.00	0.00	0.00	15
10900	8	0.00	0.00	0.00	0.00	0.00	16
11000	8	0.00	0.00	0.00	0.00	0.00	17
11100	8	0.00	0.00	0.00	0.00	0.00	18
11200	8	0.00	0.00	0.00	0.00	0.00	19
11300	8	0.00	0.00	0.00	0.00	0.00	20
11400	8	0.00	0.00	0.00	0.00	0.00	21
11500	8	0.00	0.00	0.00	0.00	0.00	22
11600	8	0.00	0.00	0.00	0.00	0.00	23
11700	8	0.00	0.00	0.00	0.00	44.76	24
11800	8	198.56	362.93	612.78	904.71	1203.67	25
11900	8	1508.68	1786.96	1993.64	2146.97	2237.88	26
12000	8	2251.05	2188.61	2070.89	1931.79	1792.66	27
12100	8	1655.04	1513.07	1369.12	1230.39	1100.42	28
12200	8	983.19	880.09	790.88	716.12	656.89	29
12300	8	611.12	569.16	507.93	430.35	345.98	30
12400	8	259.71	177.16	95.38	12.36	0.00	31
12500	9 ENDTBL						
12600	7 READHD 8	2 #16 (100-YR) 24TH Street incl. Storm Drain HYD					2
12700	7 READHD 9	0.0000	0.1000	1.9456	0.0000		
12800	8	0.0 0.00	0.00	0.00	0.00	0.00	1
12900	8	0.00	0.00	0.00	0.00	0.00	2
13000	8	1.0 0.00	0.00	0.00	0.00	0.00	3
13100	8	0.00	0.00	0.00	0.00	0.00	4
13200	8	2.0 0.00	0.00	0.00	0.00	0.00	5
13300	8	0.00	0.00	0.00	0.00	0.00	6
13400	8	3.0 0.00	0.00	0.00	0.00	0.00	7
13500	8	0.00	0.00	0.00	0.00	0.00	8
13600	8	4.0 0.00	0.00	0.00	0.00	0.00	9
13700	8	0.00	0.00	0.00	0.00	0.00	10
13800	8	5.0 0.00	0.00	0.00	0.00	0.00	11
13900	8	0.00	0.00	0.00	0.00	0.00	12
14000	8	6.0 0.00	0.00	0.00	0.00	0.00	13
14100	8	0.00	0.00	0.00	0.00	0.00	14
14200	8	7.0 0.01	0.01	0.01	0.02	0.02	15
14300	8	0.02	0.02	0.03	0.03	0.04	16
14400	8	0.04	0.05	0.06	0.07	0.08	17
14500	8	0.09	0.11	0.14	0.17	0.21	18
14600	8	0.26	0.31	0.42	0.60	0.85	19
14700	8	1.14	1.48	1.88	2.36	2.94	20
14800	8	3.59	4.29	5.03	5.76	6.49	21
14900	8	7.22	8.04	9.14	10.63	12.49	22
15000	8	14.61	16.99	19.93	23.61	27.94	23
15100	8	33.17	47.92	94.31	182.75	246.02	24
15200	8	299.90	343.19	378.46	409.96	440.92	25
15300	8	473.51	503.69	512.74	501.34	483.71	26
15400	8	471.43	461.82	450.92	436.39	417.48	27
15500	8	394.10	366.50	336.57	308.88	286.09	28
15600	8	266.39	248.01	230.83	215.16	200.98	29
15700	8	183.17	165.11	156.04	152.74	151.49	30
15800	8	150.92	150.04	147.80	144.39	141.13	31
15900	8	138.12	132.65	122.72	110.23	97.84	32
16000	8	86.81	77.69	70.59	65.27	61.30	33
16100	8	58.29	55.91	53.83	51.83	49.88	34
16200	8	47.97	46.16	44.60	43.42	42.58	35
16300	8	42.04	41.76	41.69	41.75	41.86	36
16400	8	41.93	41.86	41.50	40.82	39.93	37
16500	8	38.93	37.97	37.23	36.80	36.67	38
1660[illegible]	8	36.77	37.00	37.18	37.16	36.95	39

23200	8		34.84	35.27	34.61	32.58	29.55	49
23300	8		25.91	21.87	17.68	13.60	9.94	50
23400	8		6.90	4.60	2.96	1.87	1.16	51
23500	8		0.72	0.44	0.27	0.16	0.07	52
23600	8		0.00	0.00	0.00	0.00	0.00	53
23700	9	ENDTBL						
23800	7	READHD 8	69	#17 (100-YR)			HYD	69
23900	7	READHD 9	0.0000	0.1000	0.7823	0.0000		
24000	8		0.00	0.00	0.00	0.00	0.00	1
24100	8		0.00	0.00	0.00	0.00	0.00	2
24200	8		0.00	0.00	0.00	0.00	0.00	3
24300	8		0.00	0.00	0.00	0.00	0.00	4
24400	8		0.00	0.00	0.00	0.00	0.00	5
24500	8		0.00	0.00	0.00	0.00	0.00	6
24600	8		0.00	0.00	0.00	0.00	0.00	7
24700	8		0.00	0.00	0.00	0.00	0.00	8
24800	8		0.00	0.00	0.00	0.00	0.00	9
24900	8		0.00	0.00	0.00	0.00	0.00	10
25000	8		0.00	0.00	0.00	0.00	0.00	11
25100	8		0.00	0.00	0.00	0.00	0.00	12
25200	8		0.00	0.00	0.00	0.00	0.00	13
25300	8		0.00	0.00	0.00	0.00	0.00	14
25400	8		0.00	0.00	0.00	0.00	0.00	15
25500	8		0.00	0.00	0.00	0.00	0.00	16
25600	8		0.00	0.00	0.00	0.00	0.00	17
25700	8		0.00	0.00	0.00	0.00	0.00	18
25800	8		0.00	0.00	0.00	0.00	0.00	19
25900	8		0.00	0.00	0.00	0.00	0.00	20
26000	8		0.00	0.00	0.00	0.00	0.00	21
26100	8		0.00	0.00	0.00	0.00	0.00	22
26200	8		0.00	0.00	0.00	0.00	0.00	23
26300	8		0.00	0.00	0.00	53.75	126.22	24
26400	8		242.77	430.49	645.16	926.24	1245.21	25
26500	8		1576.68	1905.54	2180.74	2372.59	2501.78	26
26600	8		2571.52	2568.25	2492.27	2362.29	2207.27	27
26700	8		2045.45	1879.23	1707.35	1537.03	1376.83	28
26800	8		1228.83	1094.72	975.69	872.18	784.77	29
26900	8		708.73	644.10	588.53	522.51	484.16	30
27000	8		359.76	273.68	188.71	103.15	31.50	31
27100	8		11.57	3.96	0.00	0.00	0.00	32
27200	9	ENDTBL						
27300	7	READHD 8	1	#19 (100-YR)			HYD	1
27400	7	READHD 9	0.0000	0.1000	0.0710	0.0000		
27500	8		0.00	0.00	0.00	0.00	0.00	1
27600	8		0.00	0.00	0.00	0.00	0.00	2
27700	8		0.00	0.00	0.00	0.00	0.00	3
27800	8		0.00	0.00	0.00	0.00	0.00	4
27900	8		0.00	0.00	0.00	0.00	0.00	5
28000	8		0.00	0.00	0.00	0.00	0.00	6
28100	8		0.00	0.00	0.00	0.00	0.00	7
28200	8		0.00	0.00	0.00	0.00	0.00	8
28300	8		0.00	0.00	0.00	0.00	0.00	9
28400	8		0.00	0.00	0.00	0.00	0.00	10
28500	8		0.00	0.00	0.00	0.00	0.00	11
28600	8		0.00	0.00	0.00	0.00	0.00	12
28700	8		0.00	0.00	0.00	0.00	0.00	13
28800	8		0.00	0.00	0.00	0.00	0.00	14
28900	8		0.00	0.00	0.00	0.00	0.00	15
29000	8		0.00	0.00	0.00	0.00	0.00	16
29100	8		0.00	0.00	0.00	0.00	0.00	17
29200	8		0.00	0.01	0.02	0.02	0.03	18
29300	8		0.04	0.06	0.12	0.18	0.25	19
29400	8		0.31	0.38	0.45	0.52	0.58	20
29500	8		0.65	0.70	0.75	0.78	0.82	21
29600	8		0.87	0.97	1.18	1.41	1.59	22
29700	8		1.74	1.96	2.37	2.81	3.16	23
29800	8		3.67	8.21	23.55	42.91	59.10	24

29900	8	71.04	79.83	86.35	91.34	95.20	25
30000	8	98.12	91.33	66.23	39.45	23.60	26
30100	8	16.41	12.50	9.87	8.07	7.12	27
30200	8	6.65	6.23	5.57	4.89	4.50	28
30300	8	4.32	4.26	4.30	4.38	4.42	29
30400	8	4.44	4.43	4.35	4.26	4.21	30
30500	8	4.17	3.90	3.07	2.23	1.73	31
30600	8	1.50	1.39	1.33	1.30	1.29	32
30700	8	1.29	1.32	1.40	1.50	1.55	33
30800	8	1.58	1.56	1.48	1.39	1.33	34
30900	8	1.31	1.33	1.41	1.50	1.56	35
31000	8	1.58	1.60	1.60	1.60	1.61	36
31100	8	1.61	1.58	1.49	1.39	1.34	37
31200	8	1.31	1.33	1.42	1.51	1.56	38
31300	8	1.59	1.57	1.48	1.39	1.34	39
31400	8	1.31	1.30	1.29	1.29	1.29	40
31500	8	1.29	1.32	1.41	1.51	1.56	41
31600	8	1.59	1.57	1.48	1.40	1.34	42
31700	8	1.32	1.33	1.42	1.51	1.57	43
31800	8	1.59	1.57	1.49	1.40	1.34	44
31900	8	1.32	1.34	1.42	1.51	1.57	45
32000	8	1.59	1.57	1.49	1.40	1.34	46
32100	8	1.32	1.31	1.30	1.30	1.30	47
32200	8	1.30	1.33	1.42	1.51	1.57	48
32300	8	1.59	1.45	0.99	0.53	0.25	49
32400	8	0.12	0.06	0.03	0.01	0.00	50
32500	9 ENDTBL						

R*E

$

EDIT/READ 508007.IN

Input assumed unsequenced

Read: DUA0:[KC1DIR]508007.IN;1

R*P/C:*/*

3/27/85 AN Co Rend

4-18-83 50-YR

44 HS Starting Time (50-YR) Time Incr. = Hrs D.A. = sq. mi.

00100	7	READHD 8	4, #1					HYD	4
00200	7	READHD 9		0.0000	0.1000	1.9028	0.0000		
00300	8			0.00	0.00	0.00	0.00	0.00	1
00400	8			0.00	0.00	0.00	0.00	0.00	2
00500	8			0.00	0.00	0.00	0.00	0.00	3
00600	8			0.00	0.00	0.00	0.00	0.00	4
00700	8			0.00	0.00	0.00	0.00	0.00	5
00800	8			0.00	0.00	0.00	0.00	0.00	6
00900	8			0.00	0.00	0.00	0.00	0.00	7
01000	8			0.00	0.00	0.00	0.00	0.00	8
01100	8			0.00	0.00	0.00	0.00	0.00	9
01200	8			0.00	0.00	0.00	0.00	0.00	10
01300	8			0.00	0.00	0.00	0.01	0.02	11
01400	8			0.03	0.04	0.05	0.06	0.08	12
01500	8			0.10	0.12	0.14	0.16	0.18	13
01600	8			0.19	0.20	0.21	0.22	0.23	14
01700	8			0.25	0.28	0.30	0.32	0.34	15
01800	8			0.34	0.35	0.35	0.35	0.37	16
01900	8			0.39	0.42	0.44	0.47	0.48	17
02000	8			0.48	0.48	0.47	0.47	0.48	18
02100	8			0.51	0.54	0.57	0.63	0.74	19
02200	8			0.96	1.21	1.46	1.68	1.87	20
02300	8			2.04	2.21	2.38	2.56	2.74	21
02400	8			2.92	3.10	3.31	3.61	4.05	22
02500	8			4.65	5.34	6.15	7.15	8.44	23
02600	8			10.10	14.51	27.85	53.54	84.15	24
02700	8			119.88	157.27	193.21	225.85	259.24	25
02800	8			306.37	361.53	395.34	408.14	400.21	26
02900	8			387.33	371.71	356.47	342.43	327.12	27
03000	8			311.66	298.87	288.03	278.77	270.91	28
03100	8			263.79	257.19	250.76	244.45	238.07	29
03200	8			230.68	219.43	203.92	187.27	170.97	30
03300	8			155.47	140.52	125.62	111.11	97.45	31
03400	8			84.58	72.38	60.71	49.53	38.39	32
03500	8			26.43	16.70	13.69	12.88	12.72	33
03600	8			12.72	12.74	12.65	12.46	12.23	34
03700	8			11.99	11.79	11.73	11.79	11.91	35
03800	8			12.06	12.21	12.35	12.46	12.54	36
03900	8			12.60	12.59	12.45	12.22	11.95	37
04000	8			11.68	11.46	11.39	11.42	11.53	38
04100	8			11.66	11.75	11.73	11.60	11.42	39
04200	8			11.21	11.01	10.83	10.68	10.55	40
04300	8			10.45	10.41	10.50	10.69	10.91	41
04400	8			11.13	11.29	11.32	11.22	11.06	42
04500	8			10.87	10.72	10.70	10.79	10.93	43
04600	8			11.09	11.22	11.22	11.11	10.94	44
04700	8			10.76	10.61	10.59	10.68	10.83	45
04800	8			11.00	11.11	11.10	10.98	10.81	46
04900	8			10.61	10.42	10.25	10.11	9.99	47
05000	8			9.90	9.88	9.98	10.18	10.42	48
05100	8			10.67	10.67	10.09	9.04	7.85	49
05200	8			6.63	5.51	4.57	3.81	3.21	50
05300	8			2.76	2.45	2.24	2.09	1.99	51
05400	8			1.91	1.85	1.80	1.76	1.71	52
05500	8			1.67	1.62	1.58	1.53	1.48	53
05600	8			1.44	1.39	1.35	1.31	1.27	54
05700	8			1.23	1.20	1.17	1.14	1.11	55
05800	8			1.09	1.06	1.04	1.02	1.00	56
05900	8			0.98	0.96	0.94	0.92	0.90	57
06000	8			0.88	0.85	0.83	0.81	0.79	58
06100	8			0.77	0.75	0.72	0.70	0.67	59

Col. 2 Col. 11 Col. 13 Col. 25 Col. 37 Col. 49 Col. 61

Qp

Alpha 7

06200	8		0.65	0.62	0.60	0.58	0.55	60
06300	9	ENDTBL						
06400	7	READHD 8	98	#3 (50-Yr)			HYD	98
06500	7	READHD 9	0.0000	0.1000	0.9514	0.0000		
06600	8		0.00	0.00	0.00	0.00	0.00	1
06700	8		0.00	0.00	0.00	0.00	0.00	2
06800	8		0.00	0.00	0.00	0.00	0.00	3
06900	8		0.00	0.00	0.00	0.00	0.00	4
07000	8		0.00	0.00	0.00	0.00	0.00	5
07100	8		0.00	0.00	0.00	0.00	0.00	6
07200	8		0.00	0.00	0.00	0.00	0.00	7
07300	8		0.00	0.00	0.00	0.00	0.00	8
07400	8		0.00	0.00	0.00	0.00	0.00	9
07500	8		0.00	0.00	0.00	0.00	0.00	10
07600	8		0.00	0.00	0.00	0.01	0.02	11
07700	8		0.03	0.04	0.05	0.06	0.08	12
07800	8		0.10	0.12	0.14	0.16	0.18	13
07900	8		0.19	0.20	0.21	0.22	0.23	14
08000	8		0.25	0.28	0.30	0.32	0.34	15
08100	8		0.34	0.35	0.35	0.35	0.37	16
08200	8		0.39	0.42	0.44	0.47	0.48	17
08300	8		0.48	0.48	0.47	0.47	0.48	18
08400	8		0.51	0.54	0.57	0.63	0.76	19
08500	8		0.96	1.21	1.46	1.68	1.87	20
08600	8		2.04	2.21	2.38	2.56	2.74	21
08700	8		2.92	3.10	3.31	3.61	4.05	22
08800	8		4.65	5.34	6.15	7.15	8.44	23
08900	8		10.10	14.51	27.85	39.00	39.00	24
09000	8		39.00	39.00	39.00	39.00	39.00	25
09100	8		39.00	39.00	39.00	39.00 Qp	39.00	26
09200	8		39.00	39.00	39.00	39.00	39.00	27
09300	8		39.00	39.00	39.00	39.00	39.00	28
09400	8		39.00	39.00	39.00	39.00	39.00	29
09500	8		39.00	39.00	39.00	39.00	39.00	30
09600	8		39.00	39.00	39.00	39.00	39.00	31
09700	8		39.00	39.00	39.00	39.00	38.39	32
09800	8		26.43	16.70	13.69	12.88	12.72	33
09900	8		12.72	12.74	12.65	12.46	12.23	34
10000	8		11.99	11.79	11.73	11.79	11.91	35
10100	8		12.06	12.21	12.35	12.46	12.54	36
10200	8		12.60	12.59	12.45	12.22	11.95	37
10300	8		11.68	11.46	11.39	11.42	11.53	38
10400	8		11.66	11.75	11.73	11.60	11.42	39
10500	8		11.21	11.01	10.83	10.68	10.55	40
10600	8		10.45	10.41	10.50	10.69	10.91	41
10700	8		11.13	11.29	11.32	11.22	11.06	42
10800	8		10.87	10.72	10.70	10.79	10.93	43
10900	8		11.09	11.22	11.22	11.11	10.94	44
11000	8		10.76	10.61	10.59	10.68	10.83	45
11100	8		11.00	11.11	11.10	10.98	10.81	46
11200	8		10.61	10.42	10.25	10.11	9.99	47
11300	8		9.90	9.88	9.98	10.18	10.42	48
11400	8		10.67	10.67	10.09	9.04	7.85	49
11500	8		6.63	5.51	4.57	3.81	3.21	50
11600	8		2.76	2.45	2.24	2.09	1.99	51
11700	8		1.91	1.85	1.80	1.76	1.71	52
11800	8		1.67	1.62	1.58	1.53	1.48	53
11900	8		1.44	1.39	1.35	1.31	1.27	54
12000	8		1.23	1.20	1.17	1.14	1.11	55
12100	8		1.09	1.06	1.04	1.02	1.00	56
12200	8		0.98	0.96	0.94	0.92	0.90	57
12300	8		0.88	0.85	0.83	0.81	0.79	58
12400	8		0.77	0.75	0.72	0.70	0.67	59
12500	8		0.65	0.62	0.60	0.58	0.55	60
12600	9	ENDTBL						
12700	7	READHD 8	25	#2 (50-Yr)			HYD	25
12800	7	READHD 9	0.0000	0.1000	0.4757	0.0000		

12900	8		0.00	0.00	0.00	0.00	0.00	1
13000	8		0.00	0.00	0.00	0.00	0.00	2
13100	8		0.00	0.00	0.00	0.00	0.00	3
13200	8		0.00	0.00	0.00	0.00	0.00	4
13300	8		0.00	0.00	0.00	0.00	0.00	5
13400	8		0.00	0.00	0.00	0.00	0.00	6
13500	8		0.00	0.00	0.00	0.00	0.00	7
13600	8		0.00	0.00	0.00	0.00	0.00	8
13700	8		0.00	0.00	0.00	0.00	0.00	9
13800	8		0.00	0.00	0.00	0.00	0.00	10
13900	8		0.00	0.00	0.00	0.00	0.00	11
14000	8		0.00	0.00	0.00	0.00	0.00	12
14100	8		0.00	0.00	0.00	0.00	0.00	13
14200	8		0.00	0.00	0.00	0.00	0.00	14
14300	8		0.00	0.00	0.00	0.00	0.00	15
14400	8		0.00	0.00	0.00	0.00	0.00	16
14500	8		0.00	0.00	0.00	0.00	0.00	17
14600	8		0.00	0.00	0.00	0.00	0.00	18
14700	8		0.00	0.00	0.00	0.00	0.00	19
14800	8		0.00	0.00	0.00	0.00	0.00	20
14900	8		0.00	0.00	0.00	0.00	0.00	21
15000	8		0.00	0.00	0.00	0.00	0.00	22
15100	8		0.00	0.00	0.00	0.00	0.00	23
15200	8		0.00	0.00	0.00	14.54	45.15	24
15300	8		80.88	118.27	154.21	186.85	220.24	25
15400	8		267.37	322.53	356.34	369.14	361.21	26
15500	8		348.33	332.71	317.47	303.43	288.12	27
15600	8		272.66	259.87	249.03	239.77	231.91	28
15700	8		224.79	218.19	211.76	205.45	199.07	29
15800	8		191.68	180.43	164.92	148.27	131.97	30
15900	8		116.47	101.52	86.62	72.11	58.45	31
16000	8		45.58	33.38	21.71	10.53	0.00	32
16100	9	ENDTBL						
16200	7	READHD 8	2	#4 (50-YR) 40TH ST			HYD	2
16300	7	READHD 9	0.0000	0.1000	2.3527	0.0000		
16400	8		0 0.00	0.00	0.00	0.00	0.00	1
16500	8		0.00	0.00	0.00	0.00	0.00	2
16600	8		1 0.00	0.00	0.00	0.00	0.00	3
16700	8		0.00	0.00	0.00	0.00	0.00	4
16800	8		2 0.00	0.00	0.00	0.00	0.00	5
16900	8		0.00	0.00	0.00	0.00	0.00	6
17000	8		3 0.00	0.00	0.00	0.00	0.00	7
17100	8		0.00	0.00	0.00	0.00	0.00	8
17200	8		4 0.00	0.00	0.00	0.00	0.00	9
17300	8		0.00	0.00	0.00	0.00	0.00	10
17400	8		5 0.00	0.00	0.00	0.01	0.01	11
17500	8		0.02	0.03	0.04	0.05	0.06	12
17600	8		6 0.07	0.08	0.10	0.12	0.14	13
17700	8		0.16	0.18	0.19	0.21	0.24	14
17800	8		7 0.27	0.31	0.34	0.36	0.38	15
17900	8		0.39	0.40	0.41	0.42	0.45	16
18000	8		8 0.49	0.53	0.57	0.60	0.61	17
18100	8		0.62	0.62	0.63	0.66	0.70	18
18200	8		9 0.76	0.84	0.95	1.18	1.58	19
18300	8		2.16	2.84	3.55	4.28	5.03	20
18400	8		10 5.81	6.62	7.42	8.21	8.97	21
18500	8		9.71	10.49	11.47	12.83	14.70	22
18600	8		11 17.02	19.68	22.72	26.35	30.74	23
18700	8		36.25	49.01	88.79	174.14	309.48	24
18800	8		435.52	504.98	557.46	611.17	659.10	25
18900	8		702.12	732.94	738.17	722.83	701.20	26
19000	8		678.02	650.67	623.22	597.23	573.81	27
19100	8		552.20	532.70	516.31	503.25	493.23	28
19200	8		485.49	479.06	473.17	467.26	460.96	29
19300	8		453.88	444.10	429.66	412.79	393.64	30

Qp

19400	8		358.74	324.00	292.77	262.57	232.95	31
19500	8		204.09	176.78	151.86	129.76	110.25	32
19600	8		94.56	85.59	81.40	78.81	76.93	33
19700	8		75.49	74.25	72.94	71.50	69.97	34
19800	8		68.44	67.11	66.20	65.79	65.79	35
19900	8		66.04	66.41	66.72	66.88	66.89	36
20000	8		66.79	66.53	66.03	65.28	64.33	37
20100	8		63.25	62.24	61.53	61.24	61.29	38
20200	8		61.58	61.89	61.93	61.60	60.95	39
20300	8		60.09	59.17	58.33	57.65	57.11	40
20400	8		56.69	56.42	56.38	56.60	56.99	41
20500	8		57.50	57.94	58.08	57.85	57.31	42
20600	8		56.57	55.87	55.46	55.43	55.73	43
20700	8		56.24	56.75	56.98	56.83	56.34	44
20800	8		55.62	54.89	54.42	54.31	54.54	45
20900	8		54.97	55.40	55.56	55.34	54.82	46
21000	8		54.08	53.28	52.57	52.01	51.61	47
21100	8		51.33	51.19	51.29	51.64	52.18	48
21200	8		52.78	53.02	52.11	49.93	46.74	49
21300	8		42.87	38.91	35.45	32.78	30.85	50
21400	8		29.43	28.31	27.33	26.41	25.51	51
21500	8		24.63	23.78	22.98	22.21	21.49	52
21600	8		20.79	20.12	19.48	18.89	18.35	53
21700	8		17.85	17.39	16.97	16.59	16.24	54
21800	8		15.92	15.62	15.35	15.09	14.85	55
21900	8		14.62	14.40	14.19	13.98	13.78	56
22000	8		13.57	13.37	13.16	12.95	12.74	57
22100	8		12.53	12.31	12.08	11.85	11.61	58
22200	8		11.36	11.12	10.86	10.60	10.35	59
22300	8		10.11	9.88	9.58	8.95	8.32	60
22400	9	ENDTBL						
22500	7	READHD 8	96 #6 (50-YR)				HYD	96
22600	7	READHD 9	0.0000	0.1000	1.4142	0.0000		
22700	8		0.00	0.00	0.00	0.00	0.00	1
22800	8		0.00	0.00	0.00	0.00	0.00	2
22900	8		0.00	0.00	0.00	0.00	0.00	3
23000	8		0.00	0.00	0.00	0.00	0.00	4
23100	8		0.00	0.00	0.00	0.00	0.00	5
23200	8		0.00	0.00	0.00	0.00	0.00	6
23300	8		0.00	0.00	0.00	0.00	0.00	7
23400	8		0.00	0.00	0.00	0.00	0.00	8
23500	8		0.00	0.00	0.00	0.00	0.00	9
23600	8		0.00	0.00	0.00	0.00	0.00	10
23700	8		0.00	0.00	0.00	0.01	0.01	11
23800	8		0.02	0.03	0.04	0.05	0.06	12
23900	8		0.07	0.08	0.10	0.12	0.14	13
24000	8		0.16	0.18	0.19	0.21	0.24	14
24100	8		0.27	0.31	0.34	0.36	0.38	15
24200	8		0.39	0.40	0.41	0.42	0.45	16
24300	8		0.49	0.53	0.57	0.60	0.61	17
24400	8		0.62	0.62	0.63	0.66	0.70	18
24500	8		0.76	0.84	0.95	1.18	1.58	19
24600	8		2.16	2.84	3.55	4.28	5.03	20
24700	8		5.81	6.62	7.42	8.21	8.97	21
24800	8		9.71	10.49	11.47	12.83	14.70	22
24900	8		17.02	19.68	22.72	26.35	30.74	23
25000	8		36.25	49.01	88.79	177.81	290.00	24
25100	8		290.00	290.00	290.00	290.00	290.00	25
25200	8		290.00	290.00	290.00	290.00	290.00	26
25300	8		290.00	290.00	290.00	290.00	290.00	27
25400	8		290.00	290.00	290.00	290.00	290.00	28
25500	8		290.00	290.00	290.00	290.00	290.00	29
25600	8		290.00	290.00	290.00	290.00	290.00	30
25700	8		290.00	290.00	290.00	290.00	290.00	31
25800	8		260.61	220.52	183.47	149.77	119.20	32
25900	8		95.58	85.71	81.40	78.81	76.93	33
26000	8		75.49	74.25	72.94	71.50	69.97	34

26100	8		68.44	67.11	66.20	65.79	65.79	35
26200	8		66.04	66.41	66.72	66.88	66.89	36
26300	8		66.79	66.53	66.03	65.28	64.33	37
26400	8		63.25	62.24	61.53	61.24	61.29	38
26500	8		61.58	61.89	61.93	61.60	60.95	39
26600	8		60.09	59.17	58.33	57.65	57.11	40
26700	8		56.69	56.42	56.38	56.60	56.99	41
26800	8		57.50	57.94	58.08	57.85	57.31	42
26900	8		56.57	55.87	55.46	55.43	55.73	43
27000	8		56.24	56.75	56.98	56.83	56.34	44
27100	8		55.62	54.89	54.42	54.31	54.54	45
27200	8		54.97	55.40	55.56	55.34	54.82	46
27300	8		54.08	53.28	52.57	52.01	51.61	47
27400	8		51.33	51.19	51.29	51.64	52.18	48
27500	8		52.78	53.02	52.11	49.93	46.74	49
27600	8		42.87	38.91	35.45	32.78	30.85	50
27700	8		29.43	28.31	27.33	26.41	25.51	51
27800	8		24.63	23.78	22.98	22.21	21.49	52
27900	8		20.79	20.12	19.48	18.89	18.35	53
28000	8		17.85	17.39	16.97	16.59	16.24	54
28100	8		15.92	15.62	15.35	15.09	14.85	55
28200	8		14.62	14.40	14.19	13.98	13.78	56
28300	8		13.57	13.37	13.16	12.95	12.74	57
28400	8		12.53	12.31	12.08	11.85	11.61	58
28500	8		11.36	11.12	10.86	10.60	10.35	59
28600	8		10.11	9.88	9.58	8.95	8.32	60
28700	9	ENDTBL						
28800	7	READHD 8	32	#5 (50-YR)			HYD	32
28900	7	READHD 9		0.0000	0.1000	0.7071	0.0000	
29000	8			0.00	0.00	0.00	0.00	0.00	1
29100	8			0.00	0.00	0.00	0.00	0.00	2
29200	8			0.00	0.00	0.00	0.00	0.00	3
29300	8			0.00	0.00	0.00	0.00	0.00	4
29400	8			0.00	0.00	0.00	0.00	0.00	5
29500	8			0.00	0.00	0.00	0.00	0.00	6
29600	8			0.00	0.00	0.00	0.00	0.00	7
29700	8			0.00	0.00	0.00	0.00	0.00	8
29800	8			0.00	0.00	0.00	0.00	0.00	9
29900	8			0.00	0.00	0.00	0.00	0.00	10
30000	8			0.00	0.00	0.00	0.00	0.00	11
30100	8			0.00	0.00	0.00	0.00	0.00	12
30200	8			0.00	0.00	0.00	0.00	0.00	13
30300	8			0.00	0.00	0.00	0.00	0.00	14
30400	8			0.00	0.00	0.00	0.00	0.00	15
30500	8			0.00	0.00	0.00	0.00	0.00	16
30600	8			0.00	0.00	0.00	0.00	0.00	17
30700	8			0.00	0.00	0.00	0.00	0.00	18
30800	8			0.00	0.00	0.00	0.00	0.00	19
30900	8			0.00	0.00	0.00	0.00	0.00	20
31000	8			0.00	0.00	0.00	0.00	0.00	21
31100	8			0.00	0.00	0.00	0.00	0.00	22
31200	8			0.00	0.00	0.00	0.00	0.00	23
31300	8			0.00	0.00	0.00	0.00	40.52	24
31400	8			196.95	301.95	391.24	480.16	561.21	25
31500	8			641.07	719.87	774.04	788.93	776.85	26
31600	8			746.48	706.21	663.54	622.62	584.73	27
31700	8			547.87	513.61	484.70	461.01	441.92	28
31800	8			426.37	412.88	400.38	388.04	375.40	29
31900	8			361.70	343.63	317.21	284.94	249.38	30
32000	8			198.36	148.19	101.97	56.96	13.00	31
32100	8			0.00	0.00	0.00	0.00	0.00	32
32200	9	ENDTBL							
32300	7	READHD 8	2	#7 (50-YR)	36TH Street			HYD	2
32400	7	READHD 9		0.0000	0.1000	1.9432	0.0000		
32500	8		0	0.00	0.00	0.00	0.00	0.00	1

32600	8	0.00	0.00	0.00	0.00	0.00	2
32700	8	0.00	0.00	0.00	0.00	0.00	3
32800	8	0.00	0.00	0.00	0.00	0.00	4
32900	8	0.00	0.00	0.00	0.00	0.00	5
33000	8	0.00	0.00	0.00	0.00	0.00	6
33100	8	0.00	0.00	0.00	0.00	0.00	7
33200	8	0.00	0.00	0.00	0.00	0.00	8
33300	8	0.00	0.00	0.00	0.00	0.00	9
33400	8	0.00	0.00	0.00	0.00	0.00	10
33500	8	0.00	0.00	0.00	0.00	0.00	11
33600	8	0.00	0.00	0.00	0.00	0.00	12
33700	8	0.00	0.00	0.00	0.00	0.00	13
33800	8	0.00	0.00	0.00	0.00	0.00	14
33900	8	0.00	0.00	0.00	0.00	0.00	15
34000	8	0.00	0.00	0.00	0.00	0.00	16
34100	8	0.00	0.00	0.00	0.01	0.02	17
34200	8	0.03	0.04	0.05	0.08	0.10	18
34300	8	0.13	0.17	0.22	0.32	0.47	19
34400	8	0.66	0.89	1.12	1.37	1.64	20
34500	8	1.94	2.25	2.57	2.89	3.23	21
34600	8	3.60	4.03	4.58	5.33	6.29	22
34700	8	7.41	8.72	10.34	12.43	14.97	23
34800	8	17.97	27.26	54.13	108.53	192.61	24
34900	8	293.55	375.97	435.67	499.50	564.78	25
35000	8	624.05	666.02	673.35	657.30	633.19	26
35100	8	610.23	581.26	545.88	508.51	471.42	27
35200	8	436.41	403.81	374.20	349.15	329.54	28
35300	8	314.95	304.26	295.89	287.77	277.53	29
35400	8	264.97	247.12	216.80	179.34	144.65	30
35500	8	114.24	91.90	80.07	72.14	65.03	31
35600	8	58.06	51.10	44.44	38.62	34.04	32
35700	8	30.77	28.59	27.26	26.52	26.14	33
35800	8	25.99	25.94	25.82	25.55	25.10	34
35900	8	24.50	23.83	23.28	22.94	22.86	35
36000	8	23.02	23.36	23.80	24.24	24.59	36
36100	8	24.83	24.91	24.80	24.49	24.05	37
36200	8	23.52	22.98	22.58	22.40	22.45	38
36300	8	22.72	23.10	23.40	23.54	23.45	39
36400	8	23.16	22.71	22.19	21.69	21.29	40
36500	8	21.02	20.90	20.99	21.29	21.72	41
36600	8	22.25	22.78	23.18	23.35	23.30	42
36700	8	23.04	22.67	22.36	22.24	22.33	43
36800	8	22.63	23.03	23.36	23.52	23.46	44
36900	8	23.19	22.82	22.50	22.36	22.45	45
37000	8	22.73	23.12	23.45	23.59	23.52	46
37100	8	23.24	22.81	22.30	21.80	21.41	47
37200	8	21.14	21.03	21.13	21.43	21.86	48
37300	8	22.36	22.67	22.27	21.05	19.08	49
37400	8	16.57	13.63	10.59	7.86	5.70	50
37500	8	4.20	3.23	2.61	2.19	1.89	51
37600	8	1.64	1.42	1.22	1.05	0.89	52
37700	8	0.75	0.63	0.52	0.43	0.36	53
37800	8	0.29	0.24	0.20	0.17	0.14	54
37900	8	0.11	0.09	0.08	0.06	0.05	55
38000	8	0.04	0.03	0.03	0.02	0.00	56
38100	9	ENDTBL					
38200	7	READHD 8 95 #9 (50-YR)				HYD	95
38300	7	READHD 9 0.0000	0.1000	1.3251	0.0000		
38400	8	0.00	0.00	0.00	0.00	0.00	1
38500	8	0.00	0.00	0.00	0.00	0.00	2
38600	8	0.00	0.00	0.00	0.00	0.00	3
38700	8	0.00	0.00	0.00	0.00	0.00	4
38800	8	0.00	0.00	0.00	0.00	0.00	5
38900	8	0.00	0.00	0.00	0.00	0.00	6
39000	8	0.00	0.00	0.00	0.00	0.00	7
39100	8	0.00	0.00	0.00	0.00	0.00	8
39200	8	0.00	0.00	0.00	0.00	0.00	9

39300	8	0.00	0.00	0.00	0.00	0.00	10
39400	8	0.00	0.00	0.00	0.00	0.00	11
39500	8	0.00	0.00	0.00	0.00	0.00	12
39600	8	0.00	0.00	0.00	0.00	0.00	13
39700	8	0.00	0.00	0.00	0.00	0.00	14
39800	8	0.00	0.00	0.00	0.00	0.00	15
39900	8	0.00	0.00	0.00	0.00	0.00	16
40000	8	0.00	0.00	0.00	0.01	0.02	17
40100	8	0.03	0.04	0.05	0.08	0.10	18
40200	8	0.13	0.17	0.22	0.32	0.47	19
40300	8	0.66	0.89	1.12	1.37	1.64	20
40400	8	1.94	2.25	2.57	2.89	3.23	21
40500	8	3.60	4.03	4.58	5.33	6.29	22
40600	8	7.41	8.72	10.34	12.43	14.97	23
40700	8	17.97	27.26	54.13	108.53	198.76	24
40800	8	251.00	251.00	251.00	251.00	251.00	25
40900	8	251.00	251.00	251.00	251.00	251.00	26
41000	8	251.00	251.00	251.00	251.00	251.00	27
41100	8	251.00	251.00	251.00	251.00	251.00	28
41200	8	251.00	251.00	251.00	251.00	251.00	29
41300	8	251.00	251.00	251.00	251.00	251.00	30
41400	8	251.00	251.00	228.21	173.79	121.62	31
41500	8	75.23	53.52	44.78	38.67	34.04	32
41600	8	30.77	28.59	27.26	26.52	26.14	33
41700	8	25.99	25.94	25.82	25.55	25.10	34
41800	8	24.50	23.83	23.28	22.94	22.86	35
41900	8	23.02	23.36	23.80	24.24	24.59	36
42000	8	24.83	24.91	24.80	24.49	24.05	37
42100	8	23.52	22.98	22.58	22.40	22.45	38
42200	8	22.72	23.10	23.40	23.54	23.45	39
42300	8	23.16	22.71	22.19	21.69	21.29	40
42400	8	21.02	20.90	20.99	21.29	21.72	41
42500	8	22.25	22.78	23.18	23.35	23.30	42
42600	8	23.04	22.67	22.36	22.24	22.33	43
42700	8	22.63	23.03	23.36	23.52	23.46	44
42800	8	23.19	22.82	22.50	22.36	22.45	45
42900	8	22.73	23.12	23.45	23.59	23.52	46
43000	8	23.24	22.81	22.30	21.80	21.41	47
43100	8	21.14	21.03	21.13	21.43	21.86	48
43200	8	22.36	22.67	22.27	21.05	19.08	49
43300	8	16.57	13.63	10.59	7.86	5.70	50
43400	8	4.20	3.23	2.61	2.19	1.89	51
43500	8	1.64	1.42	1.22	1.05	0.89	52
43600	8	0.75	0.63	0.52	0.43	0.36	53
43700	8	0.29	0.24	0.20	0.17	0.14	54
43800	8	0.11	0.09	0.08	0.06	0.05	55
43900	8	0.04	0.03	0.03	0.02	0.00	56
44000	9 ENDTBL						
44100	7 READHD 8	40 #8 (50-YR)				HYD	40
44200	7 READHD 9	0.0000	0.1000	1.3251	0.0000		
44300	8	0.00	0.00	0.00	0.00	0.00	1
44400	8	0.00	0.00	0.00	0.00	0.00	2
44500	8	0.00	0.00	0.00	0.00	0.00	3
44600	8	0.00	0.00	0.00	0.00	0.00	4
44700	8	0.00	0.00	0.00	0.00	0.00	5
44800	8	0.00	0.00	0.00	0.00	0.00	6
44900	8	0.00	0.00	0.00	0.00	0.00	7
45000	8	0.00	0.00	0.00	0.00	0.00	8
45100	8	0.00	0.00	0.00	0.00	0.00	9
45200	8	0.00	0.00	0.00	0.00	0.00	10
45300	8	0.00	0.00	0.00	0.00	0.00	11
45400	8	0.00	0.00	0.00	0.00	0.00	12
45500	8	0.00	0.00	0.00	0.00	0.00	13
45600	8	0.00	0.00	0.00	0.00	0.00	14
45700	8	0.00	0.00	0.00	0.00	0.00	15

45800	8	0.00	0.00	0.00	0.00	0.00	16
45900	8	0.00	0.00	0.00	0.00	0.00	17
46000	8	0.00	0.00	0.00	0.00	0.00	18
46100	8	0.00	0.00	0.00	0.00	0.00	19
46200	8	0.00	0.00	0.00	0.00	0.00	20
46300	8	0.00	0.00	0.00	0.00	0.00	21
46400	8	0.00	0.00	0.00	0.00	0.00	22
46500	8	0.00	0.00	0.00	0.00	0.00	23
46600	8	0.00	0.00	0.00	0.00	0.00	24
46700	8	101.94	318.45	484.87	640.39	793.79	25
46800	8	934.92	1056.88	1139.44	1174.58	1166.38	26
46900	8	1132.51	1074.41	999.96	920.70	843.01	27
47000	8	769.89	700.65	637.25	583.40	540.07	28
47100	8	506.28	479.83	457.80	437.04	414.38	29
47200	8	389.04	356.97	307.85	244.16	177.55	30
47300	8	109.75	38.44	0.00	0.00	0.00	31
47400	9 ENDTBL						
47500	7 READHD 8	93 #10 (50-yr) 32ND Street				HYD	93
47600	7 READHD 9	0.0000	0.1000	1.6417	0.0000		
47700	8	0.00	0.00	0.00	0.00	0.00	1
47800	8	0.00	0.00	0.00	0.00	0.00	2
47900	8	10.00	0.00	0.00	0.00	0.00	3
48000	8	0.00	0.00	0.00	0.00	0.00	4
48100	8	20.00	0.00	0.00	0.00	0.00	5
48200	8	0.00	0.00	0.00	0.00	0.00	6
48300	8	30.00	0.00	0.00	0.00	0.00	7
48400	8	0.00	0.00	0.00	0.00	0.00	8
48500	8	40.00	0.00	0.00	0.00	0.00	9
48600	8	0.00	0.00	0.00	0.00	0.00	10
48700	8	50.00	0.00	0.00	0.00	0.00	11
48800	8	0.00	0.00	0.00	0.00	0.00	12
48900	8	60.00	0.00	0.00	0.00	0.00	13
49000	8	0.00	0.00	0.00	0.00	0.00	14
49100	8	70.00	0.00	0.00	0.00	0.00	15
49200	8	0.00	0.00	0.00	0.00	0.00	16
49300	8	80.00	0.00	0.00	0.00	0.00	17
49400	8	0.00	0.00	0.00	0.00	0.00	18
49500	8	90.00	0.00	0.00	0.02	0.06	19
49600	8	0.14	0.27	0.43	0.61	0.83	20
49700	8	1.05	1.30	1.56	1.87	2.25	21
49800	8	2.71	3.28	4.06	5.12	6.47	22
49900	8	8.07	9.95	12.27	15.11	18.43	23
50000	8	22.76	35.06	74.66	153.03	243.93	24
50100	8	310.65	374.22	443.22 Qp	521.98	607.22	25
50200	8	691.06	753.63	771.57	760.63	739.77	26
50300	8	714.36	677.53	631.01	578.68	524.07	27
50400	8	469.82	417.35	368.33	325.25	290.00	28
50500	8	262.89	242.36	225.88	209.42	189.71	29
50600	8	162.61	131.66	105.14	89.43	81.54	30
50700	8	77.15	73.50	68.77	62.66	55.78	31
50800	8	48.51	41.36	35.01	30.00	26.50	32
50900	8	24.30	23.09	22.65	22.74	23.17	33
51000	8	23.78	24.38	24.74	24.75	24.47	34
51100	8	23.96	23.43	23.12	23.14	23.46	35
51200	8	24.00	24.64	25.26	25.78	26.14	36
51300	8	26.37	26.42	26.20	25.73	25.09	37
51400	8	24.37	23.71	23.31	23.29	23.58	38
51500	8	24.09	24.64	24.97	24.95	24.63	39
51600	8	24.10	23.46	22.85	22.35	21.99	40
51700	8	21.78	21.74	21.97	22.45	23.10	41
51800	8	23.85	24.53	24.92	24.95	24.67	42
51900	8	24.17	23.63	23.33	23.35	23.67	43
52000	8	24.20	24.76	25.08	25.07	24.76	44
52100	8	24.23	23.68	23.37	23.39	23.71	45
52200	8	24.24	24.79	25.11	25.11	24.80	46
52300	8	24.28	23.64	23.02	22.51	22.15	47
52400	8	21.93	21.89	22.11	22.60	23.26	48

52500	8		24.00	24.32	23.51	21.40	18.38	49
52600	8		14.77	11.01	7.57	4.83	2.90	50
52700	8		1.68	0.96	0.54	0.30	0.16	51
52800	8		0.04	0.01	0.00	0.00	0.00	52
52900	9	ENDTBL						
53000	7	READHD 8	97	#12 (50-YR)			HYD	97
53100	7	READHD 9	0.0000	0.1000	1.4834	0.0000		
53200	8		0.00	0.00	0.00	0.00	0.00	1
53300	8		0.00	0.00	0.00	0.00	0.00	2
53400	8		0.00	0.00	0.00	0.00	0.00	3
53500	8		0.00	0.00	0.00	0.00	0.00	4
53600	8		0.00	0.00	0.00	0.00	0.00	5
53700	8		0.00	0.00	0.00	0.00	0.00	6
53800	8		0.00	0.00	0.00	0.00	0.00	7
53900	8		0.00	0.00	0.00	0.00	0.00	8
54000	8		0.00	0.00	0.00	0.00	0.00	9
54100	8		0.00	0.00	0.00	0.00	0.00	10
54200	8		0.00	0.00	0.00	0.00	0.00	11
54300	8		0.00	0.00	0.00	0.00	0.00	12
54400	8		0.00	0.00	0.00	0.00	0.00	13
54500	8		0.00	0.00	0.00	0.00	0.00	14
54600	8		0.00	0.00	0.00	0.00	0.00	15
54700	8		0.00	0.00	0.00	0.00	0.00	16
54800	8		0.00	0.00	0.00	0.00	0.00	17
54900	8		0.00	0.00	0.00	0.00	0.00	18
55000	8		0.00	0.00	0.00	0.02	0.06	19
55100	8		0.14	0.27	0.43	0.61	0.83	20
55200	8		1.05	1.30	1.56	1.87	2.25	21
55300	8		2.71	3.28	4.06	5.12	6.47	22
55400	8		8.07	9.95	12.27	15.11	18.43	23
55500	8		22.76	35.06	74.66	153.03	201.00	24
55600	8		201.00	201.00	201.00	201.00	201.00	25
55700	8		201.00	201.00	201.00	201.00	201.00	26
55800	8		201.00	201.00	201.00	201.00	201.00	27
55900	8		201.00	201.00	201.00	201.00	201.00	28
56000	8		201.00	201.00	201.00	201.00	201.00	29
56100	8		201.00	201.00	201.00	201.00	201.00	30
56200	8		201.00	190.52	121.82	75.75	57.28	31
56300	8		48.67	41.36	35.01	30.00	26.50	32
56400	8		24.30	23.09	22.65	22.74	23.17	33
56500	8		23.78	24.38	24.74	24.75	24.47	34
56600	8		23.96	23.43	23.12	23.14	23.46	35
56700	8		24.00	24.64	25.26	25.78	26.14	36
56800	8		26.37	26.42	26.20	25.73	25.09	37
56900	8		24.37	23.71	23.31	23.29	23.58	38
57000	8		24.09	24.64	24.97	24.95	24.63	39
57100	8		24.10	23.46	22.85	22.35	21.99	40
57200	8		21.78	21.74	21.97	22.45	23.10	41
57300	8		23.85	24.53	24.92	24.95	24.67	42
57400	8		24.17	23.63	23.33	23.35	23.67	43
57500	8		24.20	24.76	25.08	25.07	24.76	44
57600	8		24.23	23.68	23.37	23.39	23.71	45
57700	8		24.24	24.79	25.11	25.11	24.80	46
57800	8		24.28	23.64	23.02	22.51	22.15	47
57900	8		21.93	21.89	22.11	22.60	23.26	48
58000	8		24.00	24.32	23.51	21.40	18.38	49
58100	8		14.77	11.01	7.57	4.83	2.90	50
58200	8		1.68	0.96	0.54	0.30	0.16	51
58300	8		0.04	0.01	0.00	0.00	0.00	52
58400	9	ENDTBL						
58500	7	READHD 8	86	#11 (50-YR)			HYD	86
58600	7	READHD 9	0.0000	0.1000	0.7417	0.0000		
58700	8		0.00	0.00	0.00	0.00	0.00	1
58800	8		0.00	0.00	0.00	0.00	0.00	2
58900	8		0.00	0.00	0.00	0.00	0.00	3

59000	8		0.00	0.00	0.00	0.00	0.00	4
59100	8		0.00	0.00	0.00	0.00	0.00	5
59200	8		0.00	0.00	0.00	0.00	0.00	6
59300	8		0.00	0.00	0.00	0.00	0.00	7
59400	8		0.00	0.00	0.00	0.00	0.00	8
59500	8		0.00	0.00	0.00	0.00	0.00	9
59600	8		0.00	0.00	0.00	0.00	0.00	10
59700	8		0.00	0.00	0.00	0.00	0.00	11
59800	8		0.00	0.00	0.00	0.00	0.00	12
59900	8		0.00	0.00	0.00	0.00	0.00	13
60000	8		0.00	0.00	0.00	0.00	0.00	14
60100	8		0.00	0.00	0.00	0.00	0.00	15
60200	8		0.00	0.00	0.00	0.00	0.00	16
60300	8		0.00	0.00	0.00	0.00	0.00	17
60400	8		0.00	0.00	0.00	0.00	0.00	18
60500	8		0.00	0.00	0.00	0.00	0.00	19
60600	8		0.00	0.00	0.00	0.00	0.00	20
60700	8		0.00	0.00	0.00	0.00	0.00	21
60800	8		0.00	0.00	0.00	0.00	0.00	22
60900	8		0.00	0.00	0.00	0.00	0.00	23
61000	8		0.00	0.00	0.00	0.00	41.93	24
61100	8		128.24	287.78	528.97	781.80	1026.31	25
61200	8		1262.25	1465.75	1603.74	1677.72	1698.01	26
61300	8		1673.02	1606.27	1506.15	1383.82	1252.18	27
61400	8		1120.92	994.79	876.44	770.05	680.14	28
61500	8		608.33	552.43	507.99	468.26	426.91	29
61600	8		377.09	320.30	260.37	197.64	130.07	30
61700	8		60.17	0.00	0.00	0.00	0.00	31
61800	9	ENDTBL						
61900	7	READHD 8	2	#13 (50-YR) 28TH Street Hydrograph			HYD	2
62000	7	READHD 9	0.0000	0.1000	1.6258	0.0000		
62100	8		00.00	0.00	0.00	0.00	0.00	1
62200	8		0.00	0.00	0.00	0.00	0.00	2
62300	8		10.00	0.00	0.00	0.00	0.00	3
62400	8		0.00	0.00	0.00	0.00	0.00	4
62500	8		20.00	0.00	0.00	0.00	0.00	5
62600	8		0.00	0.00	0.00	0.00	0.00	6
62700	8		30.00	0.00	0.00	0.00	0.00	7
62800	8		0.00	0.00	0.00	0.00	0.00	8
62900	8		40.00	0.00	0.00	0.00	0.00	9
63000	8		0.00	0.00	0.00	0.00	0.00	10
63100	8		50.00	0.00	0.00	0.00	0.00	11
63200	8		0.00	0.00	0.00	0.00	0.00	12
63300	8		60.00	0.00	0.00	0.00	0.00	13
63400	8		0.00	0.00	0.00	0.00	0.00	14
63500	8		70.00	0.00	0.00	0.00	0.00	15
63600	8		0.00	0.00	0.00	0.00	0.00	16
63700	8		80.00	0.00	0.00	0.00	0.00	17
63800	8		0.00	0.00	0.00	0.00	0.00	18
63900	8		90.00	0.00	0.00	0.00	0.00	19
64000	8		940.04	0.15	0.32	0.56	0.86	20
64100	8		1.20	1.57	1.97	2.39	2.83	21
64200	8		3.28	3.82	4.55	5.39	6.41	22
64300	8		7.60	9.09	11.03	13.23	15.74	23
64400	8		18.92	31.47	67.35	125.86	210.45	24
64500	8		303.51 QP	325.17	334.44	340.57	345.20	25
64600	8		349.18	339.17	307.80	291.92	287.13	26
64700	8		282.23	274.55	264.46	254.08	245.20	27
64800	8		239.77	237.38	235.70	234.83	234.53	28
64900	8		234.42	234.44	233.30	222.28	193.90	29
65000	8		169.64	150.79	135.92	124.92	117.07	30
65100	8		111.23	106.40	101.63	96.30	90.16	31
65200	8		83.31	76.32	69.77	64.13	59.64	32
65300	8		56.23	53.73	51.96	50.66	49.71	33
65400	8		49.03	48.40	47.65	46.75	45.67	34
65500	8		44.41	43.16	42.09	41.21	40.58	35

00100	8	40.18	39.90	39.68	39.41	39.07	36
00200	8	38.65	38.10	37.34	36.46	35.47	37
00300	8	34.39	33.37	32.57	31.99	31.66	38
00400	8	31.54	31.49	31.32	30.98	30.43	39
00500	8	29.71	28.89	28.05	27.31	26.67	40
00600	8	26.15	25.80	25.67	25.71	25.88	41
00700	8	26.18	26.45	26.52	26.41	26.05	42
00800	8	25.50	24.92	24.49	24.23	24.21	43
00900	8	24.39	24.60	24.67	24.58	24.27	44
01000	8	23.77	23.23	22.86	22.66	22.69	45
01100	8	22.93	23.21	23.32	23.27	23.01	46
01200	8	22.55	21.98	21.40	20.88	20.48	47
01300	8	20.18	20.04	20.12	20.35	20.73	48
01400	8	21.22	21.36	20.59	19.17	17.05	49
01500	8	14.33	11.38	8.58	6.22	4.44	50
01600	8	3.22	2.43	1.93	1.63	1.42	51
01700	8	1.28	1.15	1.10	1.06	1.02	52
01800	8	0.99	0.95	0.92	0.88	0.85	53
01900	8	0.82	0.79	0.77	0.74	0.71	54
02000	8	0.69	0.66	0.64	0.62	0.60	55
02100	8	0.57	0.55	0.53	0.52	0.50	56
02200	8	0.48	0.46	0.45	0.43	0.42	57
02300	8	0.40	0.39	0.37	0.36	0.35	58
02400	8	0.34	0.32	0.31	0.30	0.29	59
02500	8	0.24	0.03	0.00	0.00	0.00	60
02600	9	ENDTBL					
02700	7	READHD 8	6 #15 (50-YR)			HYD	6
02800	7	READHD 9	0.0000	0.1000	1.1838	0.0000	
02900	8	0.00	0.00	0.00	0.00	0.00	1
03000	8	0.00	0.00	0.00	0.00	0.00	2
03100	8	0.00	0.00	0.00	0.00	0.00	3
03200	8	0.00	0.00	0.00	0.00	0.00	4
03300	8	0.00	0.00	0.00	0.00	0.00	5
03400	8	0.00	0.00	0.00	0.00	0.00	6
03500	8	0.00	0.00	0.00	0.00	0.00	7
03600	8	0.00	0.00	0.00	0.00	0.00	8
03700	8	0.00	0.00	0.00	0.00	0.00	9
03800	8	0.00	0.00	0.00	0.00	0.00	10
03900	8	0.00	0.00	0.00	0.00	0.00	11
04000	8	0.00	0.00	0.00	0.00	0.00	12
04100	8	0.00	0.00	0.00	0.00	0.00	13
04200	8	0.00	0.00	0.00	0.00	0.00	14
04300	8	0.00	0.00	0.00	0.00	0.00	15
04400	8	0.00	0.00	0.00	0.00	0.00	16
04500	8	0.00	0.00	0.00	0.00	0.00	17
04600	8	0.00	0.00	0.00	0.00	0.00	18
04700	8	0.00	0.00	0.00	0.00	0.00	19
04800	8	0.04	0.15	0.32	0.56	0.86	20
04900	8	1.20	1.57	1.97	2.39	2.83	21
05000	8	3.28	3.82	4.55	5.39	6.41	22
05100	8	7.60	9.09	11.03	13.23	15.74	23
05200	8	18.92	31.47	67.35	125.86	217.93	24
05300	8	236.00	236.00	236.00	236.00	236.00	25
05400	8	236.00	236.00	236.00	236.00	236.00	26
05500	8	236.00	236.00	236.00	236.00	236.00	27
05600	8	236.00	236.00	236.00	236.00	236.00	28
05700	8	236.00	236.00	236.00	236.00	236.00	29
05800	8	236.00	236.00	236.00	236.00	236.00	30
05900	8	236.00	164.67	109.43	97.34	90.30	31
06000	8	83.31	76.32	69.77	64.13	59.64	32
06100	8	56.23	53.73	51.96	50.66	49.71	33
06200	8	49.03	48.40	47.65	46.75	45.67	34
06300	8	44.41	43.16	42.09	41.21	40.58	35
06400	8	40.18	39.90	39.68	39.41	39.07	36

06500	8		38.65	38.10	37.34	36.46	35.47	37
06600	8		34.39	33.37	32.57	31.99	31.66	38
06700	8		31.54	31.49	31.32	30.98	30.43	39
06800	8		29.71	28.89	28.05	27.31	26.67	40
06900	8		26.15	25.80	25.67	25.71	25.88	41
07000	8		26.18	26.45	26.52	26.41	26.05	42
07100	8		25.50	24.92	24.49	24.23	24.21	43
07200	8		24.39	24.60	24.67	24.58	24.27	44
07300	8		23.77	23.23	22.86	22.66	22.69	45
07400	8		22.93	23.21	23.32	23.27	23.01	46
07500	8		22.55	21.98	21.40	20.88	20.48	47
07600	8		20.18	20.04	20.12	20.35	20.73	48
07700	8		21.22	21.36	20.59	19.17	17.05	49
07800	8		14.33	11.38	8.58	6.22	4.44	50
07900	8		3.22	2.43	1.93	1.63	1.42	51
08000	8		1.28	1.15	1.10	1.06	1.02	52
08100	8		0.99	0.95	0.92	0.88	0.85	53
08200	8		0.82	0.79	0.77	0.74	0.71	54
08300	8		0.69	0.66	0.64	0.62	0.60	55
08400	8		0.57	0.55	0.53	0.52	0.50	56
08500	8		0.48	0.46	0.45	0.43	0.42	57
08600	8		0.40	0.39	0.37	0.36	0.35	58
08700	8		0.34	0.32	0.31	0.30	0.29	59
08800	8		0.24	0.03	0.00	0.00	0.00	60
08900	9	ENDTBL						
09000	7	READHD 8	66	#14 (50-YR)			HYD	66
09100	7	READHD 9	0.0000	0.1000	1.1838	0.0000		
09200	8		0.00	0.00	0.00	0.00	0.00	1
09300	8		0.00	0.00	0.00	0.00	0.00	2
09400	8		0.00	0.00	0.00	0.00	0.00	3
09500	8		0.00	0.00	0.00	0.00	0.00	4
09600	8		0.00	0.00	0.00	0.00	0.00	5
09700	8		0.00	0.00	0.00	0.00	0.00	6
09800	8		0.00	0.00	0.00	0.00	0.00	7
09900	8		0.00	0.00	0.00	0.00	0.00	8
10000	8		0.00	0.00	0.00	0.00	0.00	9
10100	8		0.00	0.00	0.00	0.00	0.00	10
10200	8		0.00	0.00	0.00	0.00	0.00	11
10300	8		0.00	0.00	0.00	0.00	0.00	12
10400	8		0.00	0.00	0.00	0.00	0.00	13
10500	8		0.00	0.00	0.00	0.00	0.00	14
10600	8		0.00	0.00	0.00	0.00	0.00	15
10700	8		0.00	0.00	0.00	0.00	0.00	16
10800	8		0.00	0.00	0.00	0.00	0.00	17
10900	8		0.00	0.00	0.00	0.00	0.00	18
11000	8		0.00	0.00	0.00	0.00	0.00	19
11100	8		0.00	0.00	0.00	0.00	0.00	20
11200	8		0.00	0.00	0.00	0.00	0.00	21
11300	8		0.00	0.00	0.00	0.00	0.00	22
11400	8		0.00	0.00	0.00	0.00	0.00	23
11500	8		0.00	0.00	0.00	0.00	0.00	24
11600	8		120.22	235.76	410.33	649.58	902.92	25
11700	8		1150.44	1371.60	1535.75	1654.15	1721.83	26
11800	8		1736.13	1701.93	1624.52	1514.45	1384.61	27
11900	8		1249.04	1116.45	989.48	871.46	766.27	28
12000	8		677.48	606.26	549.21	493.07	423.94	29
12100	8		356.90	287.93	216.60	145.64	79.57	30
12200	8		1.32	0.00	0.00	0.00	0.00	31
12300	9	ENDTBL						
12400	7	READHD 8	2	#16 (50-YR)	24TH Street		HYD	2
12500	7	READHD 9	0.0000	0.1000	1.9456	0.0000		
12600	8		00.00	0.00	0.00	0.00	0.00	1
12700	8		0.00	0.00	0.00	0.00	0.00	2
12800	8		0.00	0.00	0.00	0.00	0.00	3
12900	8		0.00	0.00	0.00	0.00	0.00	4
13000	8		0.00	0.00	0.00	0.00	0.00	5
13100	8		0.00	0.00	0.00	0.00	0.00	6

13200	8		30.00	0.00	0.00	0.00	0.00	7
13300	8		0.00	0.00	0.00	0.00	0.00	8
13400	8		40.00	0.00	0.00	0.00	0.00	9
13500	8		0.00	0.00	0.00	0.00	0.00	10
13600	8		50.00	0.00	0.00	0.00	0.00	11
13700	8		0.00	0.00	0.00	0.00	0.00	12
13800	8		60.00	0.00	0.00	0.00	0.00	13
13900	8		0.00	0.00	0.00	0.00	0.00	14
14000	8		70.00	0.00	0.00	0.00	0.00	15
14100	8		0.00	0.00	0.00	0.00	0.00	16
14200	8		8 0.01	0.01	0.01	0.01	0.02	17
14300	8		0.02	0.02	0.02	0.03	0.03	18
14400	8		9 0.03	0.05	0.08	0.15	0.24	19
14500	8		0.36	0.51	0.69	0.89	1.12	20
14600	8		10 1.37	1.66	1.98	2.36	2.77	21
14700	8		3.22	3.74	4.44	5.40	6.60	22
14800	8		11 7.99	9.59	11.60	14.16	17.20	23
14900	8		20.87	31.32	65.44	135.50	209.09	24
15000	8		12 259.22	298.85	330.28	356.86	381.49	25
15100	8		405.67	422.73	417.06	394.94	372.08	26
15200	8		360.04	355.96	352.76	345.78	334.56	27
15300	8		320.34	304.84	289.10	272.97	256.26	28
15400	8		239.33	222.53	206.29	187.19	165.05	29
15500	8		153.87	150.24	148.97	148.35	147.94	30
15600	8		147.54	146.69	144.64	140.85	133.74	31
15700	8		123.00	110.57	98.07	86.39	76.07	32
15800	8		67.37	60.38	55.03	51.12	48.27	33
15900	8		46.19	44.59	43.18	41.80	40.42	34
16000	8		39.03	37.70	36.57	35.74	35.18	35
16100	8		34.86	34.75	34.80	34.94	35.11	36
16200	8		35.25	35.25	34.99	34.46	33.74	37
16300	8		32.92	32.13	31.53	31.20	31.11	38
16400	8		31.24	31.46	31.63	31.62	31.46	39
16500	8		31.13	30.68	30.12	29.54	28.98	40
16600	8		28.51	28.21	28.21	28.52	29.04	41
16700	8		29.69	30.35	30.82	31.04	31.03	42
16800	8		30.82	30.52	30.29	30.24	30.36	43
16900	8		30.63	30.99	31.25	31.32	31.22	44
17000	8		30.96	30.61	30.36	30.30	30.42	45
17100	8		30.69	31.05	31.31	31.39	31.28	46
17200	8		31.01	30.60	30.09	29.53	29.00	47
17300	8		28.56	28.28	28.29	28.62	29.16	48
17400	8		29.81	30.17	29.61	27.86	25.25	49
17500	8		22.11	18.64	15.04	11.56	8.43	50
17600	8		5.85	3.89	2.50	1.58	0.98	51
17700	8		0.61	0.37	0.22	0.12	0.00	52
17800	9	ENDTBL						
17900	7	READHD 8	6 #18 (50-YR)				HYD	6
18000	7	READHD 9	0.0000	0.1000	1.5647	0.0000		
18100	8		0.00	0.00	0.00	0.00	0.00	1
18200	8		0.00	0.00	0.00	0.00	0.00	2
18300	8		0.00	0.00	0.00	0.00	0.00	3
18400	8		0.00	0.00	0.00	0.00	0.00	4
18500	8		0.00	0.00	0.00	0.00	0.00	5
18600	8		0.00	0.00	0.00	0.00	0.00	6
18700	8		0.00	0.00	0.00	0.00	0.00	7
18800	8		0.00	0.00	0.00	0.00	0.00	8
18900	8		0.00	0.00	0.00	0.00	0.00	9
19000	8		0.00	0.00	0.00	0.00	0.00	10
19100	8		0.00	0.00	0.00	0.00	0.00	11
19200	8		0.00	0.00	0.00	0.00	0.00	12
19300	8		0.00	0.00	0.00	0.00	0.00	13
19400	8		0.00	0.00	0.00	0.00	0.00	14
19500	8		0.00	0.00	0.00	0.00	0.00	15
19600	8		0.00	0.00	0.00	0.00	0.00	16

19700	8		0.01	0.01	0.01	0.01	0.02	17
19800	8		0.02	0.02	0.02	0.03	0.03	18
19900	8		0.03	0.05	0.08	0.15	0.24	19
20000	8		0.36	0.51	0.69	0.89	1.12	20
20100	8		1.37	1.66	1.98	2.36	2.77	21
20200	8		3.22	3.74	4.44	5.40	6.60	22
20300	8		7.99	9.59	11.60	14.16	17.20	23
20400	8		20.87	31.32	65.44	129.00	129.00	24
20500	8		129.00	129.00	129.00	129.00	129.00	25
20600	8		129.00	129.00	129.00	129.00	129.00	26
20700	8		129.00	129.00	129.00	129.00	129.00	27
20800	8		129.00	129.00	129.00	129.00	129.00	28
20900	8		129.00	129.00	129.00	129.00	129.00	29
21000	8		129.00	129.00	129.00	129.00	129.00	30
21100	8		129.00	129.00	129.00	129.00	129.00	31
21200	8		123.00	110.57	98.07	86.39	76.07	32
21300	8		67.37	60.38	55.03	51.12	48.27	33
21400	8		46.19	44.59	43.18	41.80	40.42	34
21500	8		39.03	37.70	36.57	35.74	35.18	35
21600	8		34.86	34.75	34.80	34.94	35.11	36
21700	8		35.25	35.25	34.99	34.46	33.74	37
21800	8		32.92	32.13	31.53	31.20	31.11	38
21900	8		31.24	31.46	31.63	31.62	31.46	39
22000	8		31.13	30.68	30.12	29.54	28.98	40
22100	8		28.51	28.21	28.21	28.52	29.04	41
22200	8		29.69	30.35	30.82	31.04	31.03	42
22300	8		30.82	30.52	30.29	30.24	30.36	43
22400	8		30.63	30.99	31.25	31.32	31.22	44
22500	8		30.96	30.61	30.36	30.30	30.42	45
22600	8		30.69	31.05	31.31	31.39	31.28	46
22700	8		31.01	30.60	30.09	29.53	29.00	47
22800	8		28.56	28.28	28.29	28.62	29.16	48
22900	8		29.81	30.17	29.61	27.86	25.25	49
23000	8		22.11	18.64	15.04	11.56	8.43	50
23100	8		5.85	3.89	2.50	1.58	0.98	51
23200	8		0.61	0.37	0.22	0.12	0.00	52
23300	9	ENDTBL						
23400	7	READHD 8	69 #17 (50-YR)				HYD	69
23500	7	READHD 9	0.0000	0.1000	0.7823	0.0000		
23600	8		0.00	0.00	0.00	0.00	0.00	1
23700	8		0.00	0.00	0.00	0.00	0.00	2
23800	8		0.00	0.00	0.00	0.00	0.00	3
23900	8		0.00	0.00	0.00	0.00	0.00	4
24000	8		0.00	0.00	0.00	0.00	0.00	5
24100	8		0.00	0.00	0.00	0.00	0.00	6
24200	8		0.00	0.00	0.00	0.00	0.00	7
24300	8		0.00	0.00	0.00	0.00	0.00	8
24400	8		0.00	0.00	0.00	0.00	0.00	9
24500	8		0.00	0.00	0.00	0.00	0.00	10
24600	8		0.00	0.00	0.00	0.00	0.00	11
24700	8		0.00	0.00	0.00	0.00	0.00	12
24800	8		0.00	0.00	0.00	0.00	0.00	13
24900	8		0.00	0.00	0.00	0.00	0.00	14
25000	8		0.00	0.00	0.00	0.00	0.00	15
25100	8		0.00	0.00	0.00	0.00	0.00	16
25200	8		0.00	0.00	0.00	0.00	0.00	17
25300	8		0.00	0.00	0.00	0.00	0.00	18
25400	8		0.00	0.00	0.00	0.00	0.00	19
25500	8		0.00	0.00	0.00	0.00	0.00	20
25600	8		0.00	0.00	0.00	0.00	0.00	21
25700	8		0.00	0.00	0.00	0.00	0.00	22
25800	8		0.00	0.00	0.00	0.00	0.00	23
25900	8		0.00	0.00	0.00	6.50	80.09	24
26000	8		154.92	301.72	459.76	668.13	927.62	25
26100	8		1201.61	1461.06	1667.53	1806.23	1896.72	26
26200	8		1947.18	1953.53	1912.90	1826.86	1705.44	27
26300	8		1562.69	1413.12	1265.76	1123.91	990.85	28

26400	8		870.67	766.86	680.32	602.68	521.43	29
26500	8		442.82	371.70	301.16	229.55	158.15	30
26600	8		86.24	27.14	16.84	12.01	4.74	31
26700	8		0.00	0.00	0.00	0.00	0.00	32
26800	9	ENDTBL						
26900	7	READHD 8	1	#19 (50-YR)			HYD	1
27000	7	READHD 9	0.0000	0.1000	0.0710	0.0000		
27100	8		0.00	0.00	0.00	0.00	0.00	1
27200	8		0.00	0.00	0.00	0.00	0.00	2
27300	8		0.00	0.00	0.00	0.00	0.00	3
27400	8		0.00	0.00	0.00	0.00	0.00	4
27500	8		0.00	0.00	0.00	0.00	0.00	5
27600	8		0.00	0.00	0.00	0.00	0.00	6
27700	8		0.00	0.00	0.00	0.00	0.00	7
27800	8		0.00	0.00	0.00	0.00	0.00	8
27900	8		0.00	0.00	0.00	0.00	0.00	9
28000	8		0.00	0.00	0.00	0.00	0.00	10
28100	8		0.00	0.00	0.00	0.00	0.00	11
28200	8		0.00	0.00	0.00	0.00	0.00	12
28300	8		0.00	0.00	0.00	0.00	0.00	13
28400	8		0.00	0.00	0.00	0.00	0.00	14
28500	8		0.00	0.00	0.00	0.00	0.00	15
28600	8		0.00	0.00	0.00	0.00	0.00	16
28700	8		0.00	0.00	0.00	0.00	0.00	17
28800	8		0.00	0.00	0.00	0.00	0.00	18
28900	8		0.00	0.00	0.00	0.01	0.04	19
29000	8		0.08	0.13	0.18	0.23	0.29	20
29100	8		0.34	0.39	0.43	0.46	0.50	21
29200	8		0.54	0.62	0.77	0.93	1.07	22
29300	8		1.19	1.36	1.67	2.01	2.29	23
29400	8		2.69	6.21	18.31	34.09	47.82	24
29500	8		58.35	66.35	72.44	77.19	80.93	25
29600	8		83.82	78.27	56.86	33.90	20.30	26
29700	8		14.13	10.77	8.52	6.97	6.15	27
29800	8		5.74	5.38	4.81	4.22	3.89	28
29900	8		3.73	3.68	3.72	3.78	3.82	29
30000	8		3.84	3.83	3.76	3.68	3.64	30
30100	8		3.61	3.37	2.65	1.93	1.50	31
30200	8		1.30	1.20	1.15	1.13	1.12	32
30300	8		1.11	1.14	1.22	1.30	1.34	33
30400	8		1.37	1.35	1.28	1.20	1.15	34
30500	8		1.13	1.15	1.22	1.30	1.35	35
30600	8		1.37	1.38	1.39	1.39	1.39	36
30700	8		1.39	1.37	1.29	1.21	1.16	37
30800	8		1.14	1.15	1.23	1.31	1.35	38
30900	8		1.37	1.36	1.28	1.21	1.16	39
31000	8		1.14	1.13	1.12	1.12	1.12	40
31100	8		1.12	1.15	1.22	1.31	1.35	41
31200	8		1.37	1.36	1.29	1.21	1.16	42
31300	8		1.14	1.16	1.23	1.31	1.36	43
31400	8		1.38	1.36	1.29	1.21	1.16	44
31500	8		1.14	1.16	1.23	1.31	1.36	45
31600	8		1.38	1.36	1.29	1.21	1.17	46
31700	8		1.14	1.13	1.13	1.12	1.12	47
31800	8		1.13	1.15	1.23	1.31	1.36	48
31900	8		1.38	1.26	0.86	0.46	0.22	49
32000	8		0.11	0.05	0.02	0.01	0.00	50
32100	9	ENDTBL						
R*E								
$								

19700	8		0.01	0.01	0.01	0.01	0.02	17
19800	8		0.02	0.02	0.02	0.03	0.03	18
19900	8		0.03	0.05	0.08	0.15	0.24	19
20000	8		0.36	0.51	0.69	0.89	1.12	20
20100	8		1.37	1.66	1.98	2.36	2.77	21
20200	8		3.22	3.74	4.44	5.40	6.60	22
20300	8		7.99	9.59	11.60	14.16	17.20	23
20400	8		20.87	31.32	65.44	129.00	129.00	24
20500	8		129.00	129.00	129.00	129.00	129.00	25
20600	8		129.00	129.00	129.00	129.00	129.00	26
20700	8		129.00	129.00	129.00	129.00	129.00	27
20800	8		129.00	129.00	129.00	129.00	129.00	28
20900	8		129.00	129.00	129.00	129.00	129.00	29
21000	8		129.00	129.00	129.00	129.00	129.00	30
21100	8		129.00	129.00	129.00	129.00	129.00	31
21200	8		123.00	110.57	98.07	86.39	76.07	32
21300	8		67.37	60.38	55.03	51.12	48.27	33
21400	8		46.19	44.59	43.18	41.80	40.42	34
21500	8		39.03	37.70	36.57	35.74	35.18	35
21600	8		34.86	34.75	34.80	34.94	35.11	36
21700	8		35.25	35.25	34.99	34.46	33.74	37
21800	8		32.92	32.13	31.53	31.20	31.11	38
21900	8		31.24	31.46	31.63	31.62	31.46	39
22000	8		31.13	30.68	30.12	29.54	28.98	40
22100	8		28.51	28.21	28.21	28.52	29.04	41
22200	8		29.69	30.35	30.82	31.04	31.03	42
22300	8		30.82	30.52	30.29	30.24	30.36	43
22400	8		30.63	30.99	31.25	31.32	31.22	44
22500	8		30.96	30.61	30.36	30.30	30.42	45
22600	8		30.69	31.05	31.31	31.39	31.28	46
22700	8		31.01	30.60	30.09	29.53	29.00	47
22800	8		28.56	28.28	28.29	28.62	29.16	48
22900	8		29.81	30.17	29.61	27.86	25.25	49
23000	8		22.11	18.64	15.04	11.56	8.43	50
23100	8		5.85	3.89	2.50	1.58	0.98	51
23200	8		0.61	0.37	0.22	0.12	0.00	52
23300	9	ENDTBL						
23400	7	READHD 8	69 #17 (50-YR)				HYD	69
23500	7	READHD 9	0.0000	0.1000	0.7823	0.0000		
23600	8		0.00	0.00	0.00	0.00	0.00	1
23700	8		0.00	0.00	0.00	0.00	0.00	2
23800	8		0.00	0.00	0.00	0.00	0.00	3
23900	8		0.00	0.00	0.00	0.00	0.00	4
24000	8		0.00	0.00	0.00	0.00	0.00	5
24100	8		0.00	0.00	0.00	0.00	0.00	6
24200	8		0.00	0.00	0.00	0.00	0.00	7
24300	8		0.00	0.00	0.00	0.00	0.00	8
24400	8		0.00	0.00	0.00	0.00	0.00	9
24500	8		0.00	0.00	0.00	0.00	0.00	10
24600	8		0.00	0.00	0.00	0.00	0.00	11
24700	8		0.00	0.00	0.00	0.00	0.00	12
24800	8		0.00	0.00	0.00	0.00	0.00	13
24900	8		0.00	0.00	0.00	0.00	0.00	14
25000	8		0.00	0.00	0.00	0.00	0.00	15
25100	8		0.00	0.00	0.00	0.00	0.00	16
25200	8		0.00	0.00	0.00	0.00	0.00	17
25300	8		0.00	0.00	0.00	0.00	0.00	18
25400	8		0.00	0.00	0.00	0.00	0.00	19
25500	8		0.00	0.00	0.00	0.00	0.00	20
25600	8		0.00	0.00	0.00	0.00	0.00	21
25700	8		0.00	0.00	0.00	0.00	0.00	22
25800	8		0.00	0.00	0.00	0.00	0.00	23
25900	8		0.00	0.00	0.00	6.50	80.09	24
26000	8		154.92	301.72	459.76	668.13	927.62	25
26100	8		1201.61	1461.06	1667.53	1806.23	1896.72	26
26200	8		1947.18	1953.53	1912.90	1826.86	1705.44	27
26300	8		1562.69	1413.12	1265.76	1123.91	990.85	28

26400	8		870.67	766.86	680.32	602.68	521.43	29
26500	8		442.82	371.70	301.16	229.55	158.15	30
26600	8		86.24	27.14	16.84	12.01	4.74	31
26700	8		0.00	0.00	0.00	0.00	0.00	32
26800	9	ENDTBL						
26900	7	READHD 8	1	#19 (50-YR)			HYD	1
27000	7	READHD 9	0.0000	0.1000	0.0710	0.0000		
27100	8		0.00	0.00	0.00	0.00	0.00	1
27200	8		0.00	0.00	0.00	0.00	0.00	2
27300	8		0.00	0.00	0.00	0.00	0.00	3
27400	8		0.00	0.00	0.00	0.00	0.00	4
27500	8		0.00	0.00	0.00	0.00	0.00	5
27600	8		0.00	0.00	0.00	0.00	0.00	6
27700	8		0.00	0.00	0.00	0.00	0.00	7
27800	8		0.00	0.00	0.00	0.00	0.00	8
27900	8		0.00	0.00	0.00	0.00	0.00	9
28000	8		0.00	0.00	0.00	0.00	0.00	10
28100	8		0.00	0.00	0.00	0.00	0.00	11
28200	8		0.00	0.00	0.00	0.00	0.00	12
28300	8		0.00	0.00	0.00	0.00	0.00	13
28400	8		0.00	0.00	0.00	0.00	0.00	14
28500	8		0.00	0.00	0.00	0.00	0.00	15
28600	8		0.00	0.00	0.00	0.00	0.00	16
28700	8		0.00	0.00	0.00	0.00	0.00	17
28800	8		0.00	0.00	0.00	0.00	0.00	18
28900	8		0.00	0.00	0.00	0.01	0.04	19
29000	8		0.08	0.13	0.18	0.23	0.29	20
29100	8		0.34	0.39	0.43	0.46	0.50	21
29200	8		0.54	0.62	0.77	0.93	1.07	22
29300	8		1.19	1.36	1.67	2.01	2.29	23
29400	8		2.69	6.21	18.31	34.09	47.82	24
29500	8		58.35	66.35	72.44	77.19	80.93	25
29600	8		83.82	78.27	56.86	33.90	20.30	26
29700	8		14.13	10.77	8.52	6.97	6.15	27
29800	8		5.74	5.38	4.81	4.22	3.89	28
29900	8		3.73	3.68	3.72	3.78	3.82	29
30000	8		3.84	3.83	3.76	3.68	3.64	30
30100	8		3.61	3.37	2.65	1.93	1.50	31
30200	8		1.30	1.20	1.15	1.13	1.12	32
30300	8		1.11	1.14	1.22	1.30	1.34	33
30400	8		1.37	1.35	1.28	1.20	1.15	34
30500	8		1.13	1.15	1.22	1.30	1.35	35
30600	8		1.37	1.38	1.39	1.39	1.39	36
30700	8		1.39	1.37	1.29	1.21	1.16	37
30800	8		1.14	1.15	1.23	1.31	1.35	38
30900	8		1.37	1.36	1.28	1.21	1.16	39
31000	8		1.14	1.13	1.12	1.12	1.12	40
31100	8		1.12	1.15	1.22	1.31	1.35	41
31200	8		1.37	1.36	1.29	1.21	1.16	42
31300	8		1.14	1.16	1.23	1.31	1.36	43
31400	8		1.38	1.36	1.29	1.21	1.16	44
31500	8		1.14	1.16	1.23	1.31	1.36	45
31600	8		1.38	1.36	1.29	1.21	1.17	46
31700	8		1.14	1.13	1.13	1.12	1.12	47
31800	8		1.13	1.15	1.23	1.31	1.36	48
31900	8		1.38	1.26	0.86	0.46	0.22	49
32000	8		0.11	0.05	0.02	0.01	0.00	50
32100	9	ENDTBL						
R*E								
$								

16600	8	0.00	0.00	0.00	0.00	0.00	6
16700	8	0.00	0.00	0.00	0.00	0.00	7
16800	8	0.00	0.00	0.00	0.00	0.00	8
16900	8	0.00	0.00	0.00	0.00	0.00	9
17000	8	0.00	0.00	0.00	0.00	0.00	10
17100	8	0.00	0.00	0.00	0.00	0.00	11
17200	8	0.00	0.00	0.00	0.00	0.00	12
17300	8	0.00	0.00	0.00	0.00	0.00	13
17400	8	0.00	0.00	0.00	0.00	0.00	14
17500	8	0.00	0.00	0.00	0.00	0.00	15
17600	8	0.00	0.00	0.00	0.00	0.00	16
17700	8	0.00	0.00	0.00	0.00	0.00	17
17800	8	0.00	0.00	0.00	0.00	0.00	18
17900	8	0.00	0.00	0.00	0.00	0.00	19
18000	8	0.00	0.00	0.00	0.00	0.00	20
18100	8	0.00	0.00	0.00	0.00	0.00	21
18200	8	0.00	0.00	0.00	0.00	0.00	22
18300	8	0.00	0.00	0.00	0.00	0.00	23
18400	8	0.00	0.00	0.00	0.00	0.00	24
18500	8	0.00	0.00	4.56	12.05	15.46	25
18600	8	18.32	16.09	3.39	0.45	0.12	26
18700	8	0.00	0.00	0.00	0.00	0.00	27
18800	9 ENDTBL						
18900	7 READHD 8 85					HYD	85
19000	7 READHD 9	0.0000	0.1000	0.5771	0.0000		
19100	8	0.00	0.00	0.00	0.00	0.00	1
19200	8	0.00	0.00	0.00	0.00	0.00	2
19300	8	0.00	0.00	0.00	0.00	0.00	3
19400	8	0.00	0.00	0.00	0.00	0.00	4
19500	8	0.00	0.00	0.00	0.00	0.00	5
19600	8	0.00	0.00	0.00	0.00	0.00	6
19700	8	0.00	0.00	0.00	0.00	0.00	7
19800	8	0.00	0.00	0.00	0.00	0.00	8
19900	8	0.00	0.00	0.00	0.00	0.00	9
20000	8	0.00	0.00	0.00	0.00	0.00	10
20100	8	0.00	0.00	0.00	0.00	0.00	11
20200	8	0.00	0.00	0.00	0.00	0.00	12
20300	8	0.00	0.00	0.00	0.00	0.00	13
20400	8	0.00	0.00	0.00	0.00	0.00	14
20500	8	0.00	0.00	0.00	0.00	0.00	15
20600	8	0.00	0.00	0.00	0.00	0.00	16
20700	8	0.00	0.00	0.00	0.00	0.00	17
20800	8	0.00	0.00	0.00	0.00	0.00	18
20900	8	0.00	0.00	0.00	0.00	0.00	19
21000	8	0.00	0.00	0.00	0.00	0.00	20
21100	8	0.00	0.00	0.00	0.00	0.00	21
21200	8	0.00	0.00	0.00	0.00	0.00	22
21300	8	0.00	0.00	0.00	0.00	0.00	23
21400	8	0.00	0.00	0.00	0.00	0.00	24
21500	8	0.00	0.00	14.34	51.39	69.22	25
21600	8	78.20	82.09	74.23	51.01	24.68	26
21700	8	8.57	1.90	0.42	0.09	0.02	27
21800	8	0.00	0.00	0.00	0.00	0.00	28
21900	9 ENDTBL						
22000	7 READHD 8 97	#12				HYD	97
22100	7 READHD 9	0.0000	0.1000	1.4834	0.0000		
22200	8	0.00	0.00	0.00	0.00	0.00	1
22300	8	0.00	0.00	0.00	0.00	0.00	2
22400	8	0.00	0.00	0.00	0.00	0.00	3
22500	8	0.00	0.00	0.00	0.00	0.00	4
22600	8	0.00	0.00	0.00	0.00	0.00	5
22700	8	0.00	0.00	0.00	0.00	0.00	6
22800	8	0.00	0.00	0.00	0.00	0.00	7
22900	8	0.00	0.00	0.00	0.00	0.00	8

10 yr.
Flow along
Grand Canal
at Freeway
S.E. Corner

18800	9	ENDTBL					
18900	7	READHD 8	84				HY
19000	7	READHD 9	0.0000	0.1000	0.5771	0.0000	
19100	8		0.00	0.00	0.00	0.00	0.00
19200	8		0.00	0.00	0.00	0.00	0.00
19300	8		0.00	0.00	0.00	0.00	0.00
19400	8		0.00	0.00	0.00	0.00	0.00
19500	8		0.00	0.00	0.00	0.00	0.00
19600	8		0.00	0.00	0.00	0.00	0.00
19700	8		0.00	0.00	0.00	0.00	0.00
19800	8		0.00	0.00	0.00	0.00	0.00
19900	8		0.00	0.00	0.00	0.00	0.00
20000	8		0.00	0.00	0.00	0.00	0.00
20100	8		0.00	0.00	0.00	0.00	0.00
20200	8		0.00	0.00	0.00	0.00	0.00
20300	8		0.00	0.00	0.00	0.00	0.00
20400	8		0.00	0.00	0.00	0.00	0.00
20500	8		0.00	0.00	0.00	0.00	0.00
20600	8		0.00	0.00	0.00	0.00	0.00
20700	8		0.00	0.00	0.00	0.00	0.00
20800	8		0.00	0.00	0.00	0.00	0.00
20900	8		0.00	0.00	0.00	0.00	0.00
21000	8		0.00	0.00	0.00	0.00	0.00
21100	8		0.00	0.00	0.00	0.00	0.00
21200	8		0.00	0.00	0.00	0.00	0.00
21300	8		0.00	0.00	0.00	0.00	0.00
21400	8		0.00	0.00	0.00	0.00	0.00
21500	8		0.78	15.77	22.64	27.28	31.17
21600	8		34.40	30.88	13.49	0.80	0.35
21700	8		0.14	0.03	0.00	0.00	0.00
21800	9	ENDTBL					
21900	7	READHD 8	85				HY
22000	7	READHD 9	0.0000	0.1000	0.5771	0.0000	
22100	8		0.00	0.00	0.00	0.00	0.00
22200	8	25yr.	0.00	0.00	0.00	0.00	0.00
22300	8		0.00	0.00	0.00	0.00	0.00
22400	8		0.00	0.00	0.00	0.00	0.00
22500	8		0.00	0.00	0.00	0.00	0.00
22600	8		0.00	0.00	0.00	0.00	0.00
22700	8		0.00	0.00	0.00	0.00	0.00
22800	8		0.00	0.00	0.00	0.00	0.00
22900	8		0.00	0.00	0.00	0.00	0.00
23000	8		0.00	0.00	0.00	0.00	0.00
23100	8		0.00	0.00	0.00	0.00	0.00
23200	8		0.00	0.00	0.00	0.00	0.00
23300	8		0.00	0.00	0.00	0.00	0.00
23400	8		0.00	0.00	0.00	0.00	0.00
23500	8		0.00	0.00	0.00	0.00	0.00
23600	8		0.00	0.00	0.00	0.00	0.00
23700	8		0.00	0.00	0.00	0.00	0.00
23800	8		0.00	0.00	0.00	0.00	0.00
23900	8		0.00	0.00	0.00	0.00	0.00
24000	8		0.00	0.00	0.00	0.00	0.00
24100	8		0.00	0.00	0.00	0.00	0.00
24200	8		0.00	0.00	0.00	0.00	0.00
24300	8		0.00	0.00	0.00	0.00	0.00
24400	8		0.00	0.00	0.00	0.00	0.00
24500	8		9.22	41.64	73.97	90.99	101.70
24600	8		109.87	113.52	102.39	73.08	42.37
24700	8		20.80	8.97	2.94	0.69	0.16
24800	8		0.04	0.00	0.00	0.00	0.00
24900	9	ENDTBL					
25000	7	READHD 8	97	#17			HY

20800	8		0.00	0.00	0.00	0.00	0.00	16
20900	8		0.00	0.00	0.00	0.00	0.00	17
21000	8		0.00	0.00	0.00	0.00	0.00	18
21100	8		0.00	0.00	0.00	0.00	0.00	19
21200	8		0.00	0.00	0.00	0.00	0.00	20
21300	8		0.00	0.00	0.00	0.00	0.00	21
21400	8		0.00	0.00	0.00	0.00	0.00	22
21500	8		0.00	0.00	0.00	0.00	0.00	23
21600	8		0.00	0.00	0.00	0.00	0.21	24
21700	8		17.19	28.92	35.12	40.21	44.45	25
21800	8		47.92	43.26	21.96	2.63	0.55	26
21900	8		0.29	0.16	0.07	0.00	0.00	27
22000	9	ENDTBL						
22100	7	READHD 8	85				HYD	85
22200	7	READHD 9.	0.0000	0.1000	0.5771	0.0000		
22300	8		0 0.00	0.00	0.00	0.00	0.00	1
22400	8	50yr.	0.00	0.00	0.00	0.00	0.00	2
22500	8		1 0.00	0.00	0.00	0.00	0.00	3
22600	8		0.00	0.00	0.00	0.00	0.00	4
22700	8		2 0.00	0.00	0.00	0.00	0.00	5
22800	8		0.00	0.00	0.00	0.00	0.00	6
22900	8		3 0.00	0.00	0.00	0.00	0.00	7
23000	8		0.00	0.00	0.00	0.00	0.00	8
23100	8		4 0.00	0.00	0.00	0.00	0.00	9
23200	8		0.00	0.00	0.00	0.00	0.00	10
23300	8		5 0.00	0.00	0.00	0.00	0.00	11
23400	8		0.00	0.00	0.00	0.00	0.00	12
23500	8		6 0.00	0.00	0.00	0.00	0.00	13
23600	8		0.00	0.00	0.00	0.00	0.00	14
23700	8		70.00	0.00	0.00	0.00	0.00	15
23800	8		0.00	0.00	0.00	0.00	0.00	16
23900	8		80.00	0.00	0.00	0.00	0.00	17
24000	8		0.00	0.00	0.00	0.00	0.00	18
24100	8		90.00	0.00	0.00	0.00	0.00	19
24200	8		0.00	0.00	0.00	0.00	0.00	20
24300	8		100.00	0.00	0.00	0.00	0.00	21
24400	8		0.00	0.00	0.00	0.00	0.00	22
24500	8		→ 110.00	0.00	0.00	0.00	0.00	23
24600	8		115 0.00	0.00	0.00	0.00	2.43	24
24700	8		25.22	74.24	101.21	116.56	127.57	25
24800	8		136.29	139.89	125.94	91.06	56.23	26
24900	8		31.28	17.14	9.17	3.94	0.97	27
25000	8		0.23	0.05	0.00	0.00	0.00	28
25100	9	ENDTBL						
25200	7	READHD 8	97 #12				HYD	97
25300	7	READHD 9	0.0000	0.1000	1.4834	0.0000		
25400	8		0.00	0.00	0.00	0.00	0.00	1
25500	8		0.00	0.00	0.00	0.00	0.00	2
25600	8		0.00	0.00	0.00	0.00	0.00	3
25700	8		0.00	0.00	0.00	0.00	0.00	4
25800	8		0.00	0.00	0.00	0.00	0.00	5
25900	8		0.00	0.00	0.00	0.00	0.00	6
26000	8		0.00	0.00	0.00	0.00	0.00	7
26100	8		0.00	0.00	0.00	0.00	0.00	8
26200	8		0.00	0.00	0.00	0.00	0.00	9
26300	8		0.00	0.00	0.00	0.00	0.00	10
26400	8		0.00	0.00	0.00	0.00	0.00	11
26500	8		0.00	0.00	0.00	0.00	0.00	12
26600	8		0.00	0.00	0.00	0.00	0.00	13
26700	8		0.00	0.00	0.00	0.00	0.00	14
26800	8		0.00	0.00	0.00	0.00	0.00	15
26900	8		0.00	0.00	0.00	0.00	0.00	16
27000	8		0.00	0.00	0.00	0.00	0.00	17
27100	8		0.00	0.00	0.00	0.00	0.00	18

19500	8	0.00	0.00	0.00	0.00	0.00	1
19600	8	0.00	0.00	0.00	0.00	0.00	2
19700	8	0.00	0.00	0.00	0.00	0.00	3
19800	8	0.00	0.00	0.00	0.00	0.00	4
19900	8	0.00	0.00	0.00	0.00	0.00	5
20000	8	0.00	0.00	0.00	0.00	0.00	6
20100	8	0.00	0.00	0.00	0.00	0.00	7
20200	8	0.00	0.00	0.00	0.00	0.00	8
20300	8	0.00	0.00	0.00	0.00	0.00	9
20400	8	0.00	0.00	0.00	0.00	0.00	10
20500	8	0.00	0.00	0.00	0.00	0.00	11
20600	8	0.00	0.00	0.00	0.00	0.00	12
20700	8	0.00	0.00	0.00	0.00	0.00	13
20800	8	0.00	0.00	0.00	0.00	0.00	14
20900	8	0.00	0.00	0.00	0.00	0.00	15
21000	8	0.00	0.00	0.00	0.00	0.00	16
21100	8	0.00	0.00	0.00	0.00	0.00	17
21200	8	0.00	0.00	0.00	0.00	0.00	18
21300	8	0.00	0.00	0.00	0.00	0.00	19
21400	8	0.00	0.00	0.00	0.00	0.00	20
21500	8	0.00	0.00	0.00	0.00	0.00	21
21600	8	0.00	0.00	0.00	0.00	0.00	22
21700	8	0.00	0.00	0.00	0.00	0.00	23
21800	8	0.00	0.00	0.00	0.00	13.88	24
21900	8	32.72	41.19	47.94	53.42	57.94	25
22000	8	61.58	55.75	30.51	7.69	0.75	26
22100	8	0.45	0.30	0.19	0.12	0.08	27
22200	8	0.06	0.05	0.01	0.00	0.00	28
22300	9 ENDTBL						
22400	7 READHD 8	85				HYD	85
22500	7 READHD 9	0.0000	0.1000 hr	0.5771	0.0000		
22600	8 100yr.	0.00	0.00	0.00	0.00	0.00	1
22700	8	0.00	0.00	0.00	0.00	0.00	2
22800	8	1.0 0.00	0.00	0.00	0.00	0.00	3
22900	8	0.00	0.00	0.00	0.00	0.00	4
23000	8	2.0 0.00	0.00	0.00	0.00	0.00	5
23100	8	0.00	0.00	0.00	0.00	0.00	6
23200	8	3.0 0.00	0.00	0.00	0.00	0.00	7
23300	8	0.00	0.00	0.00	0.00	0.00	8
23400	8	4.0 0.00	0.00	0.00	0.00	0.00	9
23500	8	0.00	0.00	0.00	0.00	0.00	10
23600	8	5.0 0.00	0.00	0.00	0.00	0.00	11
23700	8	0.00	0.00	0.00	0.00	0.00	12
23800	8	6.0 0.00	0.00	0.00	0.00	0.00	13
23900	8	0.00	0.00	0.00	0.00	0.00	14
24000	8	7.0 0.00	0.00	0.00	0.00	0.00	15
24100	8	0.00	0.00	0.00	0.00	0.00	16
24200	8	8.0 0.00	0.00	0.00	0.00	0.00	17
24300	8	0.00	0.00	0.00	0.00	0.00	18
24400	8	9.0 0.00	0.00	0.00	0.00	0.00	19
24500	8	0.00	0.00	0.00	0.00	0.00	20
24600	8	10.0 0.00	0.00	0.00	0.00	0.00	21
24700	8	0.00	0.00	0.00	0.00	0.00	22
24800	8	11.0 0.00	0.00	0.00	0.00	0.00	23
24900	8	0.00	0.00	0.00	0.00	17.10	24
25000	8	12.0 70.08	106.78	127.72	142.45	153.89	25
25100	8	163.10	166.58	149.82	108.58	68.45	26
25200	8	13.0 41.58	25.52	16.34	10.31	6.48	27
25300	8	13.6 4.43	3.33	2.15	0.75	0.18	28
25400	8	14.0 0.04	0.00	0.00	0.00	0.00	29
25500	9 ENDTBL						
25600	7 READHD 8	97 #12				HYD	97
25700	7 READHD 9	0.0000	0.1000	1.4834	0.0000		
25800	8	0.00	0.00	0.00	0.00	0.00	1

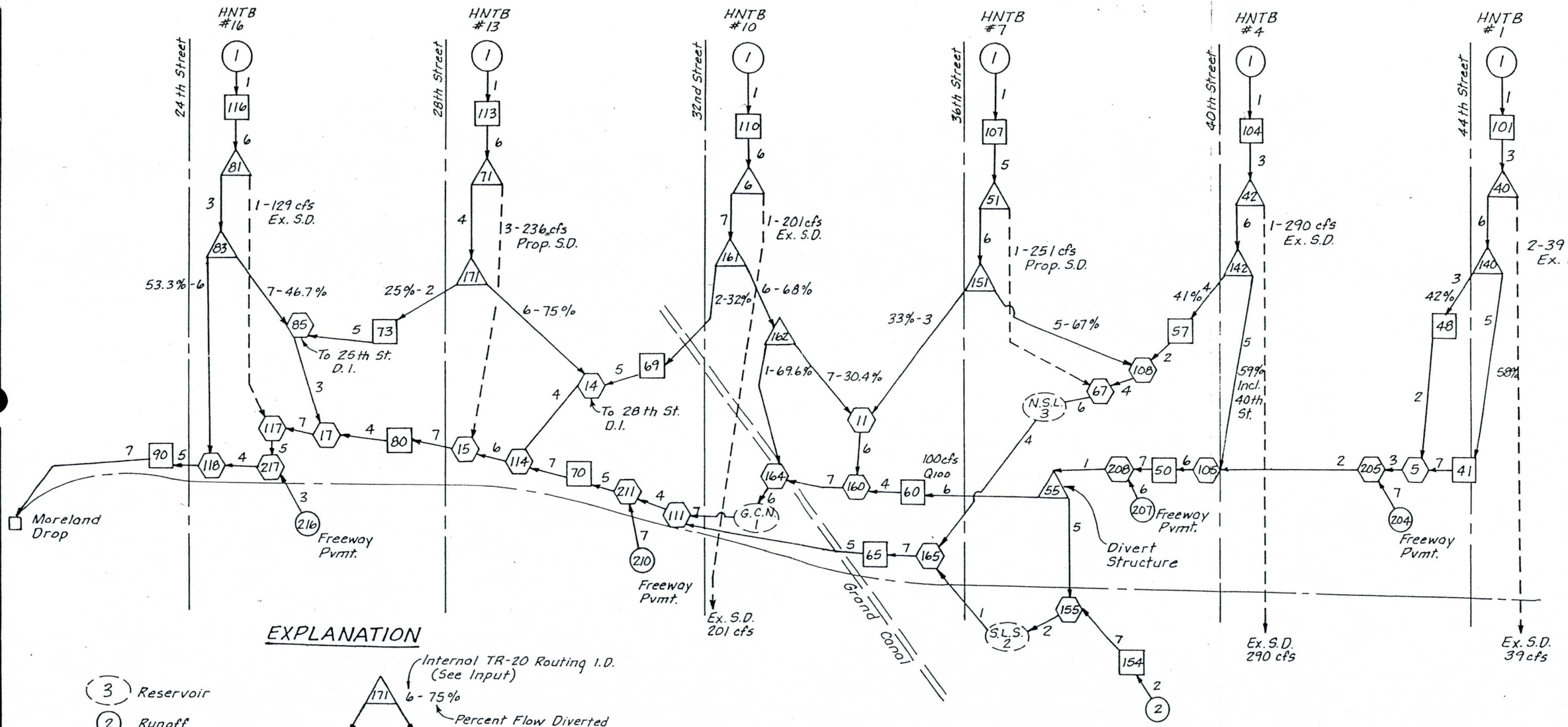

EXPLANATION

- (3) Reservoir
- (2) Runoff
- [90] Route
- (B3) Divert
- (118) Combine

171 — Internal TR-20 Routing I.D. (See Input)

6 - 75% — Percent Flow Diverted

G.C.N. Grand Canal Basin - North - Structure I.D. 1

N.S.L. North State Land Basin - Structure I.D. 3

S.L.S. South State Land Basin - Structure I.D. 2

D.I. Drop Inlet

Ex. S.D. Existing Storm Drain

EAST PAPAGO STORM DRAIN

TR-20 SCHEMATIC WITH (3) COP STORM DRAINS

A-N WEST INC.

EAST PAPAGO FREEWAY (SR 217)
JUNCTION I-10- GRAND CANAL
MARICOPA COUNTY

COORDINATE TABLE					
Baseline "F"			Baseline "D"		
F1	894643.0000	472191.0000	D1	894547.4452	472234.5036
F2	894604.0000	472218.0000	D2	894528.0862	472229.4806
F3	894566.0000	472239.0000	D3	894526.9678	472041.5177
F4	894537.0000	472274.0000	D4	894526.8197	471851.6282
F5	894504.9000	472274.0000	D5	894565.7730	471791.5815
F6	894504.9000	472269.0000	D6	894652.1079	471788.4154
F7	894504.9000	472241.0000	D7	894712.8994	471861.6448
F8	894505.5807	471771.3987	D8	894666.3401	472059.7351
F9	894644.8182	471771.2849			
F10	894644.9446	471681.2747	Construction ℄ 54" RCP		
F11	894707.4034	471681.2423			
F12	894707.5354	471596.2445	E1	895321.0886	471712.8373
F13	894802.8473	471596.2022	E2	895231.8871	471727.6594
F14	894755.0000	471735.0000	E3	894660.0653	471854.3439

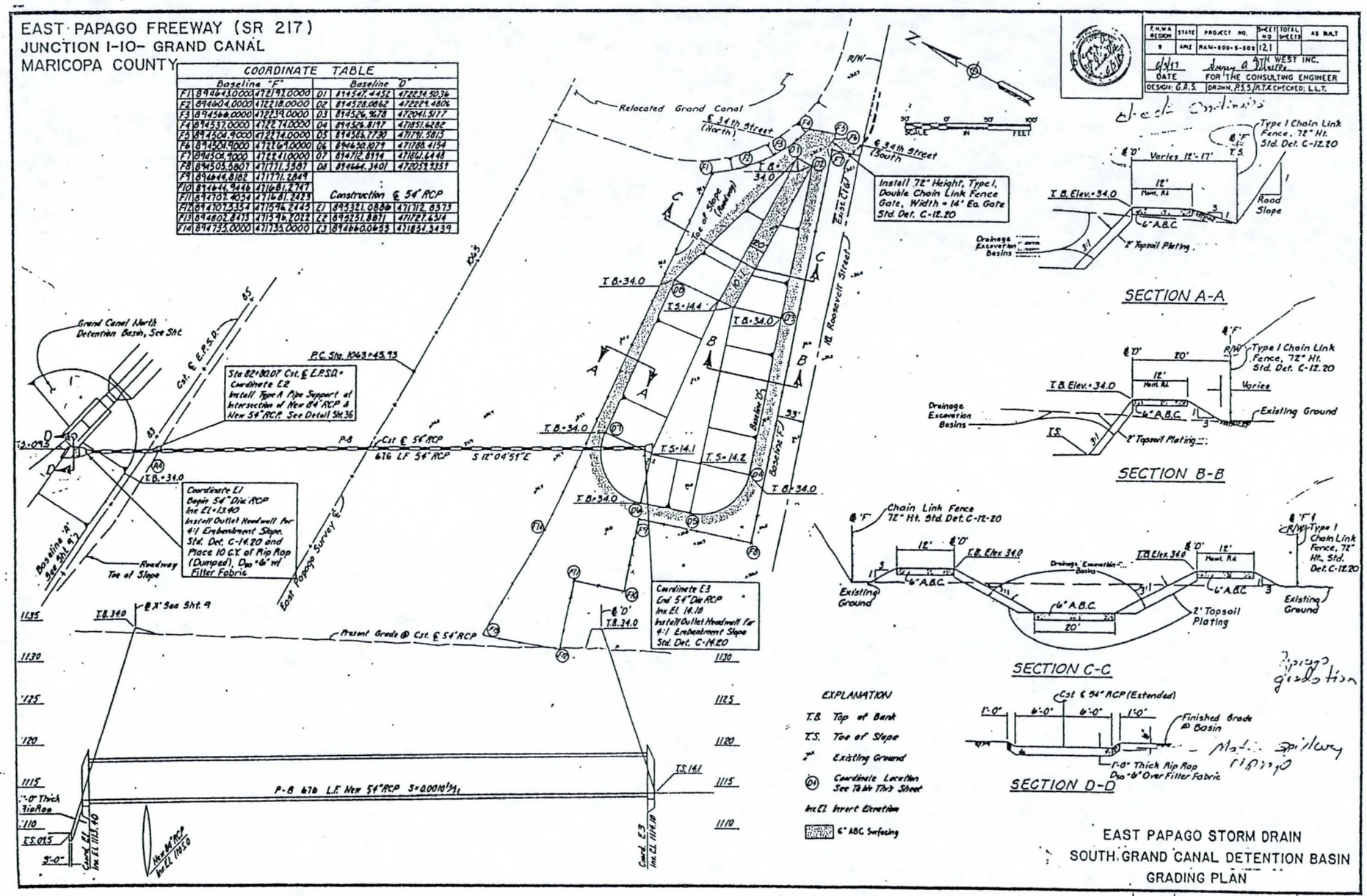

EAST PAPAGO STORM DRAIN
SOUTH GRAND CANAL DETENTION BASIN
GRADING PLAN

F.H.W.A. REGION	STATE	PROJECT NO.	SHEET NO.	TOTAL SHEETS	AS BUILT
9	ARIZ	NAM-800-S-303	12.1		

6/3/91 DATE — ANN WEST INC. FOR THE CONSULTING ENGINEER
DESIGN: G.A.S. DRAWN: P.S.S./K.T.K. CHECKED: L.L.T.

AZM-800-S-303 SHT 10 OF 39

A-79

EAST PAPAGO FREEWAY (SR 217)
JUNCTION I-10- GRAND CANAL
MARICOPA COUNTY

CATCH BASIN & PIPE FOR CONNECTION			
No.	℄ Station	Type	Size & L.F.
1	13+85.0, 45' Rt.	Mod. Det. C15.20	P3
		Type 3, 1 Wing L=31	24" x 105'
2	13+85.0, 55' Rt.	Mod. Det. C13.20	P4
		Type 3, 1 Wing L=31	30" x 110'

SCALE 100 50 0 100 FEET

COORDINATE TABLE					
Baseline "A"			Baseline "C"		
A1	895847.1858	471026.3655	C1	896037.3547	471039.5365
A2	895913.2952	471166.4472	C2	896039.5105	471058.6321
A3	895407.9808	471779.6019	C3	895595.5343	471592.2030
A4	895271.3070	471700.7164	C4	895141.2502	472139.2418
A5	895345.3833	471524.4812	C5	895178.0000	472221.0000
A6	894661.1929	472428.8199	C6	895070.0000	472234.0000
A7	895534.1573	471030.4770	C7	895018.0000	472228.0000
			C8	895335.0000	471520.0000
			C9	895505.7021	471059.0016
BAFFLED SPILLWAY No. 4			C10	895587.6877	471006.9106
B1	895850.7871	471114.9328	C11	895702.6814	471005.9469
B2	895954.5166	471067.6446	C12	895842.6863	471001.9081
			C13	896031.8506	470985.8177
			C14	896034.3985	470910.6875

EXPLANATION

T.B. Top of Bank

T.S. Toe of Slope

340 Existing Ground

A4 Coordinate Location See Table This Sheet

Inv. EL= Invert Elevation

6" ABC Surfacing

F.H.W.A. REGION	STATE	PROJECT NO.	SHEET NO.	TOTAL SHEETS	AS BUILT
9	ARIZ.	RAM-600-S-303	120		

6/3/87 DATE — ADAMS WEST INC. FOR THE CONSULTING ENGINEER

DESIGN: G.A.J. DRAWN: R.D.G./K.T.M. CHECKED: M.G.S.

Type 1 Chainlink Fence, 72" Ht. Std. Det. C-12.20

SECTION A-A

STD. DET. C-05.20 (MODIFIED)

Delete or change to Dwg.

SECTION B-B

SECTION C-C

Drainage Excavation Limits for Qty. Est.

Type 1 Chain Link Fence 72" Ht. Std. Det. C-12.20

Exist. Ground (Varies)

Slope Varies

Grader Ditch Inv. (See Plan Left)

Toe of Roadway Slope

Roadway Slope Varies 6" to 2'-0"

Type 1 Chain Link Fence, 72" Ht. Std. Det. C-12.20

Sta 12+26.0, 40' Lt (Survey ℄ 32nd St) Install 30' D/W-Slope C, G & S/W to East. See Std. Det. C-05.20 (Mod.) This Sht. and 32nd St. Improvement Plans

Install 72" Height, Type 1 Double Chain Link Fence Gate, Width = 14' ea. Gate Std. Det. C-12.20

Grader Ditch Inv. EL= 1133.0

Grand Canal Detention Basin Baffled Spillway No. 4 See Detail Sht. 31

GRAND CANAL

Grader Ditch

Grader Ditch Grade Break Inv. El.=1134.5

513.59' Lt. Surv. ℄ P.O.T. 1058+50.88

511.91' Lt. Surv. ℄ P.O.T. 1058+63.32

Baseline "A"

Grand Canal R/W

Grand Canal Detention Basin Baffled Spillway No. 8 See Detail Sht. 30

Grader Ditch Inv. EL= 1133.0

Sta. 429+47.6 Cst. ℄ E.P. Channel 30' Wide Inlet, Inv. El.= 33.0 See Detail Sht. 11

258.53' Lt. Surv. ℄ P.O.C. 1065+52.17

CAUTION (See Note 1)

Bellview St. West

Surv. ℄ Sta. 14+63.70 Angle Pt. Fnd 3" B.C.

12' Wide Access Road @ 5+10.1

To Be Abandoned

CAUTION, See Note 1

Sta. 74+33.16 = Sta. 17+32.00 32nd St.

S. 76° 45' 45.1" E.

Sta. 17+98.91 Fnd 3" B.C.

Moreland (East)

Moreland (West)

Sta. 18+13.66 Fnd 3" B.C.

Cst. ℄ E.P.S.D. See Plan / Profile Sht.

Roadway Toe of Slope (See Roadway Plans)

Sta 75+06.08 (Cst. ℄ E.P.S.D.) Construct 32nd St. Drop Inlet Structure. See Det. Sht. 16

NOTE 1: CAUTION
Existing Fiber Optic Telephone Conduit. Excavate with Extreme Care.

Cst. ℄ 54" R.C.P. For Det. See Sht. 10

Cst. ℄ East Papago Channel

Canal Bank T/S

S 12° 06' 57" E

P.T.= 1051+35.93

P.O.T. 20+00.0 32nd St.= P.O.C. 1053+41.36 Survey ℄

1055

1060

East Papago Survey ℄

EAST PAPAGO STORM DRAIN
NORTH GRAND CANAL DETENTION BASIN
GRADING PLAN

A-60

EAST PAPAGO FREEWAY (SR 217)
JUNCTION I-10- GRAND CANAL
MARICOPA COUNTY

CATCH BASIN & PIPE FOR CONNECTION			
No.	℄ Station	Type	Size x L.F.
1	13+85.0, 45' Rt.	Mod. C15.20 Type 3, 1 Wing L=31	P3 24" x 105'
2	13+85.0, 55'	Mod. C15.20 Type 3, 1 Wing, L=31	P4 30" x 110'

100' 50' 0' 100'
SCALE IN FEET

COORDINATE TABLE					
Baseline "A"			Baseline "C"		
A1	895847.1858	471026.3655	C1	896037.3542	471039.5365
A2	895913.2952	471166.9472	C2	896039.3105	471058.6321
A3	895407.9808	471779.6019	C3	895595.5343	471592.2038
A4	895271.3070	471700.7164	C4	895141.2582	472139.2415
A5	895345.3833	471524.4812	C5	895118.0000	472221.0000
A6	894661.1929	474218.8999	C6	895070.0000	472234.0000
A7	895594.1579	471030.4770	C7	895018.0000	472228.0000
			C8	895335.0000	471520.0000
BAFFLED SPILLWAY No. 4			C9	895505.7021	471059.0016
			C10	895587.6877	471006.9788
B1	895850.7871	471114.9328	C11	895702.6874	471005.9469
B2	895954.5166	471067.6446	C12	895842.6863	471001.9081
			C13	896031.8506	470985.8177
			C14	896034.3985	471010.6875

EXPLANATION

T.B. Top of Bank
T.S. Toe of Slope
34.0 Existing Ground
A4 Coordinate Location See Table This Sheet
Inv. El.= Invert Elevation
6" ABC Surfacing

F.H.W.A. REGION	STATE	PROJECT NO.	SHEET NO.	TOTAL SHEETS	AS BUILT
9	ARIZ.	RAM-800-5-602	120		

6/3/87 DATE — ADPI WEST INC. FOR THE CONSULTING ENGINEER
DESIGN: G.A.S DRAWN: R.O.G./K.T.A.G CHECKED: W.C.S

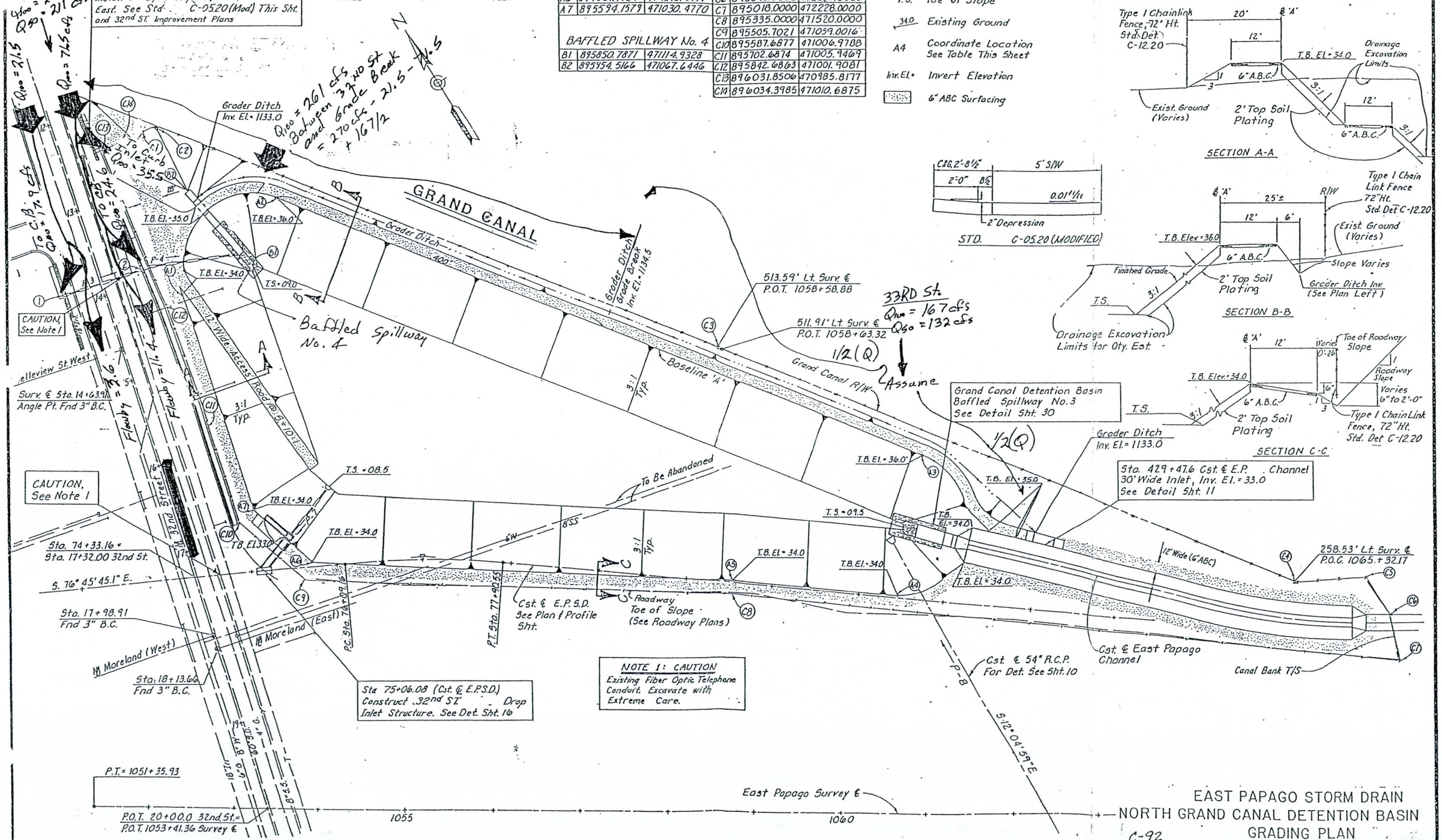

EAST PAPAGO STORM DRAIN
NORTH GRAND CANAL DETENTION BASIN
GRADING PLAN

C-92

East Papago Storm Drain 10/15/86 GAS
32ND Street Storm Drain

32ND Street Catch Basin and Storm Drain - Hydraulic Grade Line Calcs.

6/6

STORM SEWER LINE AND LOCATION	PIPE DIA. (in.)	REACH LENGTH (ft.)	SLOPE OF REACH (ft./ft.)	INVERT ELEV. (ft.)	DESIGN DISCHARGE (cfs)	FULL PIPE DISCHARGE (cfs)	DEPTH OF FLOW (ft.)	ACTUAL VELOCITY (fps)	ACTUAL VELOCITY HEAD (fps)	HEAD LOSSES FRICTION H_f (ft.)	HEAD LOSSES SHOCK OR FORM ΔH (ft.)	SLOPE OF ENERGY GRADE (ft./ft.)	GRADE LINE ELEV. ENERGY	GRADE LINE ELEV. HYDRAULIC	REMARKS
Condition 1 - Grand Canal Empty - I.E. No TW	Basin														
At Baffled Spillway, No 4 (P-4)	30	—	—	1113.5	42.5	V=27.0 Q=132									Inlet Control for No Tailwater Condition
13+85, 45' Lt. (32ND St.) P-4	30	110	0.1045	1125.0	42.5	V=27.0 Q=132		8.65	1.16	1.17			1129.00	1127.84	By Inlet Control HEC-5 $H_w/D = 1.6$ for Type 2 Entrance $H_w = 1.6 \times 2.5 = 4.0$
13+85, 45' Lt. (32ND St.) P-3	24	—	—	1125.25	17.9		Full	5.69	0.50		$K_e = 0.2 \times \Delta H_v$ 0.13		1129.13	1128.63	
13+85, 55' Rt (32ND St) P-3	24	105	0.0071	1126.0	17.9		Full	5.69	0.50	0.65	$K_{ent} = 0.2 \times H_v$ 0.1		1129.88	1129.38	Gutter El. = 1133.6± (∴ ok)
Condition 2 Grand Canal Basin @ El. 1130.5															
At Baff. Spillway No 4 (P-4)	30	—	—	1113.5	42.5	V=27.0 Q=132	Full	8.65	1.16	—	$K_e = 0.9 \times \Delta H_v$ 1.04		1131.54	1130.38	TW El = 1130.5
13+85, 45' Lt (32ND St) (P-4)	30	110	0.1045	1125.0	42.5	"	Full	8.65	1.16	1.17			1132.71	1131.55	
13+85, 45' Lt (32ND St.) (P-3)	24	—	—	1125.25	17.9		Full	5.69	0.50		0.13		1132.84	1132.34	
13+85, 55' Rt. (32ND St (P-3)	24	105	0.0071	1126.0	17.9		Full	5.69	0.50	0.65	0.1		1133.59	1133.09	Gutter El. = 1133.6± (Marginal but OK for case of high basin WSEL., i.e., unlikely to have Q peak occur during peak basin WSEL!)

APPENDIX C
C.O.P. Floodplain Analysis
List of Addresses for Survey Notification

Discharge vs. Headwater Elevation for the Weir
Plotted Curves for Sharp Crested Rectangular Weir

Project Description	
Worksheet	Grate Opening as Weir (Up tc
Type	Sharp Crested Rectangular V
Solve For	Discharge

Input Data		
Crest Elevation	00.00	ft
Tailwater Elevation	98.50	ft
Discharge Coefficic	3.33	US
Crest Length	32.00	ft
Number of Contrac	1	

Attribute	Minimum	Maximum	Increment
Headwater Elevation	100.10	102.80	0.10

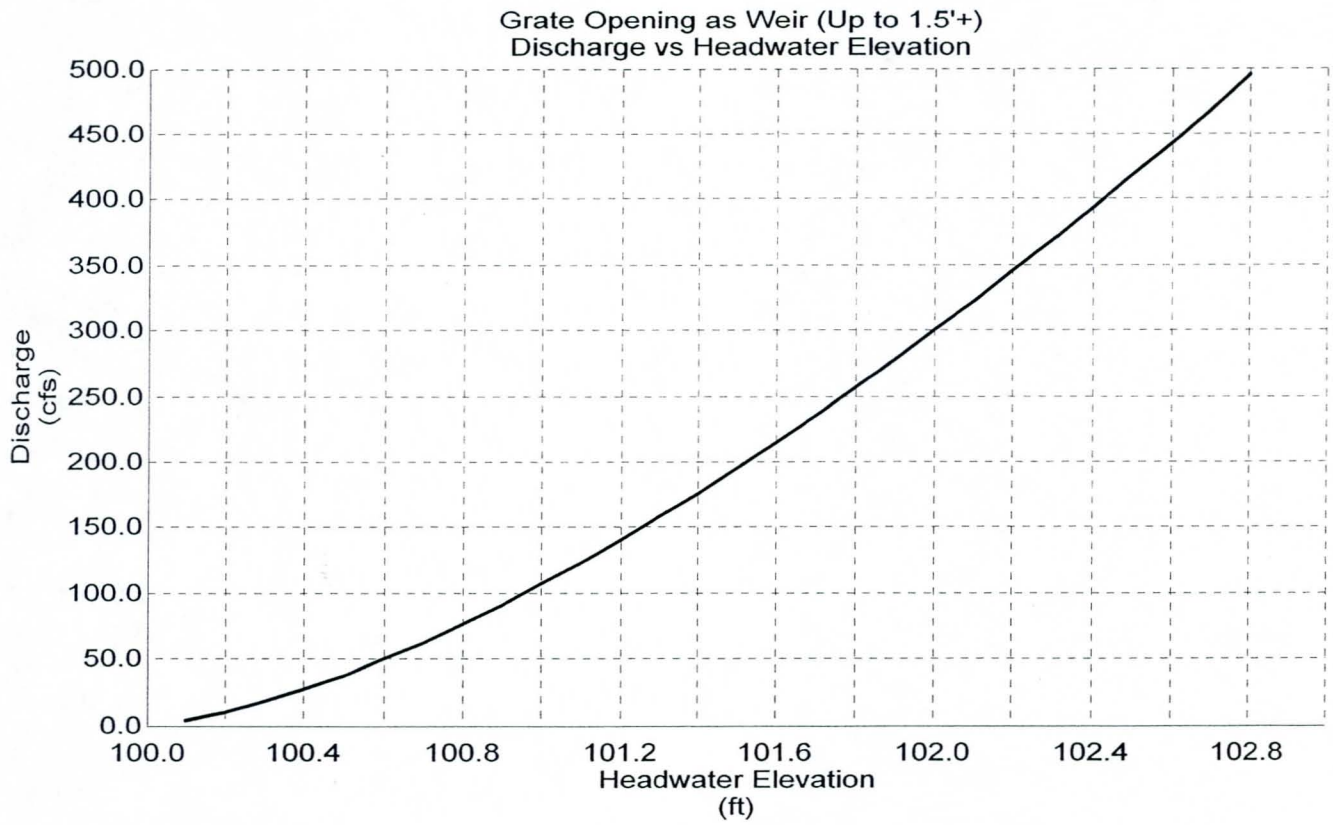

Table of Discharge vs. Headwater Elevation
Rating Table for Sharp Crested Rectangular Weir

Project Description	
Worksheet	Grate Opening as Weir (Up t
Type	Sharp Crested Rectangular V
Solve For	Discharge

Input Data		
Crest Elevation	00.00	ft
Tailwater Elevation	98.50	ft
Discharge Coefficie	3.33	US
Crest Length	32.00	ft
Number of Contrac	1	

Attribute	Minimum	Maximum	Increment
Headwater Elevation	100.10	102.80	0.10

Headwater Elevation (ft)	Discharge (cfs)	Velocity (ft/s)
100.10	3.37	1.05
100.20	9.53	1.49
100.30	17.49	1.82
100.40	26.92	2.10
100.50	37.62	2.35
100.60	49.43	2.57
100.70	62.27	2.78
100.80	76.06	2.97
100.90	90.73	3.15
101.00	106.23	3.32
101.10	122.51	3.48
101.20	139.55	3.63
101.30	157.30	3.78
101.40	175.74	3.92
101.50	194.85	4.06
101.60	214.58	4.19
101.70	234.94	4.32
101.80	255.89	4.44
101.90	277.42	4.56
102.00	299.51	4.68
102.10	322.15	4.79
102.20	345.33	4.91
102.30	369.02	5.01
102.40	393.23	5.12
102.50	417.92	5.22
102.60	443.11	5.33
102.70	468.77	5.43
102.80	494.90	5.52

Notes: At a headwater depth of approximatly 2.2, Qmin(Qorifice,Qweir) the discharge is more conservative for the orifice. For depths less than 2.2 feet, the grate acts as a weir.

Discharge vs. Headwater Elevation for Orifice
Plotted Curves for Rectangular Orifice

Project Description	
Worksheet	Grate Acting as Orifice (Greater than 1.
Type	Rectangular Orifice
Solve For	Discharge

Input Data		
Centroid Elevatior	01.00	ft
Tailwater Elevatio	98.50	ft
Discharge Coeffic	0.60	
Opening Width	32.00	ft
Opening Height	2.00	ft

Attribute	Minimum	Maximum	Increment
Headwater Elevation	100.10	103.00	0.10

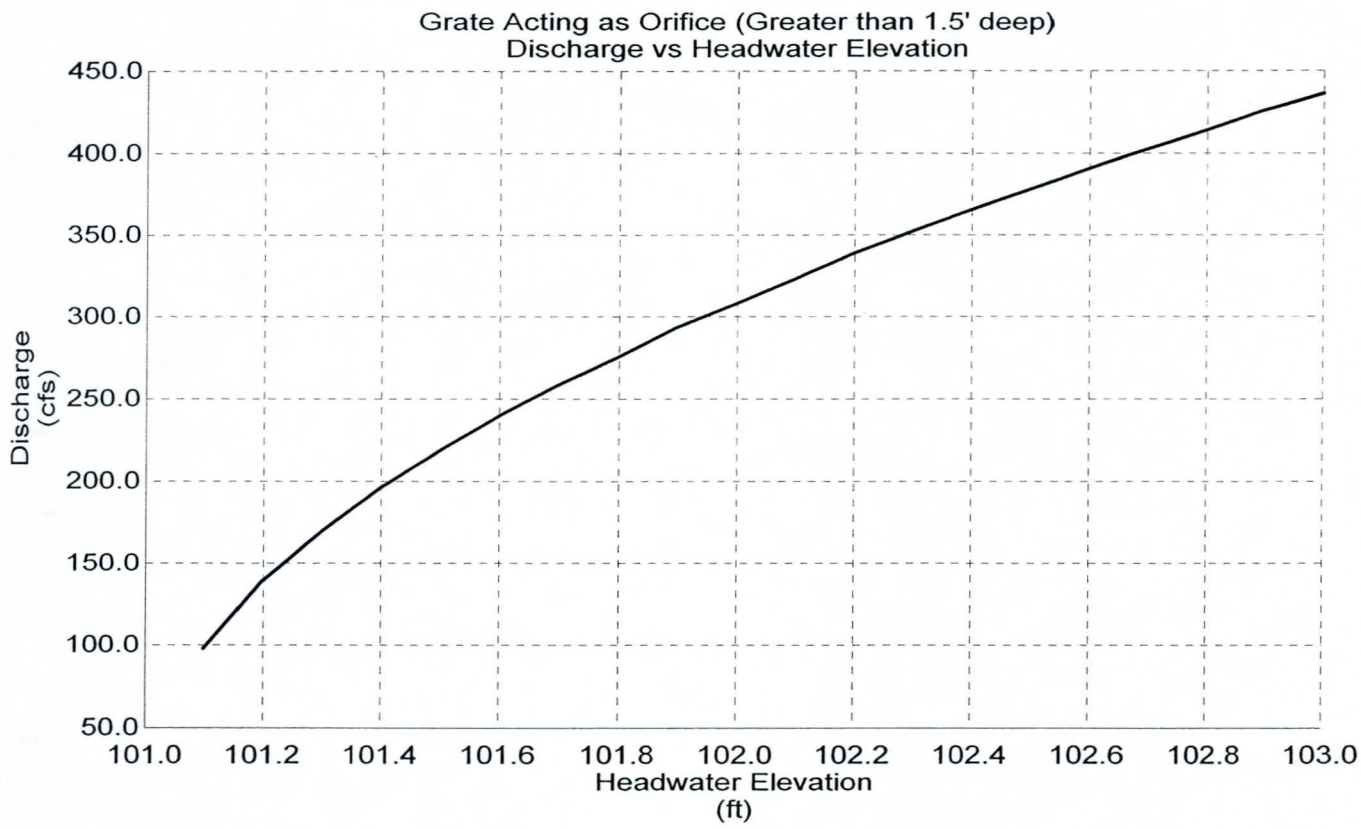

Table of Discharge vs. Headwater Elevation
Rating Table for Rectangular Orifice

Project Description	
Worksheet	Grate Acting as Orifice (Greater than 1.
Type	Rectangular Orifice
Solve For	Discharge

Input Data		
Centroid Elevatior	01.00	ft
Tailwater Elevatio	98.50	ft
Discharge Coeffic	0.60	
Opening Width	32.00	ft
Opening Height	2.00	ft

Attribute	Minimum	Maximum	Increment
Headwater Elevation	100.10	103.00	0.10

Headwate Elevation (ft)	Discharge (cfs)	Velocity (ft/s)
100.10	N/A	N/A
100.20	N/A	N/A
100.30	N/A	N/A
100.40	N/A	N/A
100.50	N/A	N/A
100.60	N/A	N/A
100.70	N/A	N/A
100.80	N/A	N/A
100.90	N/A	N/A
101.00	N/A	N/A
101.10	97.41	1.52
101.20	137.76	2.15
101.30	168.72	2.64
101.40	194.82	3.04
101.50	217.81	3.40
101.60	238.60	3.73
101.70	257.72	4.03
101.80	275.51	4.30
101.90	292.23	4.57
102.00	308.03	4.81
102.10	323.07	5.05
102.20	337.43	5.27
102.30	351.21	5.49
102.40	364.47	5.69
102.50	377.26	5.89
102.60	389.64	6.09
102.70	401.63	6.28
102.80	413.27	6.46
102.90	424.60	6.63
103.00	435.63	6.81

Notes: At a headwater depth of approximatly 2.2, Qmin(Qorifice,Qweir) the discharge is more conservative for the orifice.

APPENDIX D

C.O.P. Floodplain Analysis

FEMA Elevation Certificates

Lot	
26	SALAHADIN ABERRA 3220 E WILLETTA ST PHOENIX, AZ 85008 USA Parcel: 121-07-104
27	BELTRAN RODRIGO 3214 E WILLETTA ST PHOENIX, AZ 85008 USA Parcel: 121-07-05
28	VASQUEZ ELMER HEAD 3219 E WILETTA ST PHOENIX , AZ 85008 USA Parcel: 121-07-106
29	DURAN BLANCA 3225 E WILLETTA ST PHOENIX, AZ 85008 USA Parcel: 121-07-107
30	VILLALOBOS HEMINIA 3229 E WILLETTA ST PHOENIX, AZ 85008 USA Parcel: 121-07-108
31	OCHOA JOSEPHINE/PATRICIA 3235 E WILLETTA ST PHOENIX, AZ 85008 USA Parcel: 121-07-109
36	SHADE VICKI A 1245 N OAKLEAF PHOENIX, AZ 85008 USA Parcel: 121-07-114
37	ANZALDUA LEONOR 1239 N OAKLEAF PHOENIX, AZ 85008 USA Parcel: 121-07-115
38	HERRERA ISRAEL 1233 N OAKLEAF PHOENIX, AZ 85008 USA Parcel: 121-07-116
43	RENTERIA PRUDENCIO B/DORA R 1223 N OAKLEAF DR PHOENIX, AZ 85008 USA Parcel: 121-07-121
44	JUAREZ ANTONIO 1219 N OAKLEAF DR PHOENIX, AZ 85008 USA Parcel: 121-07-122
67	JUAREZ PAULINO T/ROSALES NOEL G 1213 N OAKLEAF PHOENIX, AZ 85008 USA Parcel: 121-07-007

68 CHAVARRIA GILBERTO
1209 N OAKLEAF DR
PHOENIX , AZ 85008 USA
Parcel: 121-07-008

69 LOPEZ ROBERT N
1201 N OAKLEAF
PHOENIX, AZ 85008 USA
Parcel: 121-07-009

78 VASQUEZ ELMER
1205 N 33RD ST
PHOENIX, AZ 85008 USA
Parcel: 121-07-019

77 COTA LOUIS C & HORTENCIA H
1149 N 33RD ST
PHOENIX, AZ 85008 USA
Parcel: 121-07-018

67 SILLARIO SAM G & PRISCILLA G
1145 N OAKLEAF DR
PHOENIX, AZ 85008 USA
Parcel: 121-08-056

66 PASTRANA ISABEL V/HERNANDEZ ELIGIA P
1139 N OAK LEAF DR
PHOENIX, AZ 85008 USA
Parcel: 121-08-055

65 Peralta, Vincent Sr. / Carmen
1131 N OAKLEAF
PHOENIX, AZ 85008 USA
Parcel: 121-08-054

64 JAQUEZ MANUEL A/RIVERA TERESA J
1140 N 34TH ST
PHOENIX, AZ 85008 USA
Parcel: 121-08-053

70 MISIC DRAGA
1132 N 34TH ST
PHOENIX, AZ 85008 USA
Parcel: 121-08-059

79 RIVERA ROBERT J/BERNICE A
1131 N 34TH ST
PHOENIX, AZ 85008 USA
Parcel: 121-08-069

78 GUZMAN ROBERT A/ SANDRA
1127 N 34TH ST
PHOENIX, AZ 85008 USA
Parcel: 121-08-068

77 COLLINS MILDRED MARGARET
1121 N 34TH ST
PHOENIX, AZ 85008 USA
Parcel: 121-08-067

60 STEVENS ROBERT G JR
3201 E WILLETTA
PHOENIX, AZ 85008 USA
Parcel: 121-07-136

59 CARDENAS FINA
1268 N OAKLEAF DR
PHOENIX, AZ 85008 USA
Parcel: 121-07-135

58 OLSKER TIMOTHY D/SHIRLEY L
1154 N OAKLEAF DR
PHOENIX, AZ 85008 USA
Parcel: 121-07-134

57 GILMORE IRMA G
1260 N OAKLEAF DR
PHOENIX, AZ 85008 USA
Parcel: 121-07-133

56 HACKBARTH CARMELLA R
1256 N OAKLEAF DR
PHOENIX, AZ 85008 USA
Parcel: 121-07-132

55 RODRIGUEZ ANGEL/ELVIA
1250 N OAKLEAF DR
PHOENIX, AZ 85008 USA
Parcel: 121-07-131

54 RAMOS RUBEN P & MARY H
1246 N OAKLEAF DR
PHOENIX, AZ 85008 USA
Parcel: 121-07-130

53 KENNEDY NEALES & FRANCES JEAN
1240 N OAKLEAF DR
PHOENIX, AZ 85008 USA
Parcel: 121-07-129

52 HERNANDEZ BALTAZAR/ELENA S
1235 N OAKLEAF DR
PHOENIX , AZ 85008 USA
Parcel: 121-07-128

51 WIMBISH BOBBIE J
1232 N OAKLEAF DR
PHOENIX, AZ 85008 USA
Parcel: 121-07-127

50 LISTON LYDIA Y
1226 N OAKLEAF DR
PHOENIX , AZ 85008 USA
Parcel: 121-07-126

49 HERNANDEZ BALTAZAR/ELENA
1222 N OAKLEAF DR
PHOENIX, AZ 850080000 USA
Parcel: 121-07-125

48 DAHL ALAN J
1216 N OAKLEAF DR
PHOENIX, AZ 85008 USA
Parcel: 121-07-124

47 PAYAN ANTONIO T/VICKIE M
1212 N OAKLEAF DR
PHOENIX, AZ 85008 USA
Parcel: 121-07-123

70 SULLIVAN MARY
1208 N OAKLEAF DR
PHOENIX, AZ 85008 USA
Parcel: 121-08-044

71 CARAVEO STEVE D & MARY H
1202 N OAKLEAF
PHOENIX, AZ 85008 USA
Parcel: 121-08-045

72 BOSS LEROY & GERALDINE
1164 N OAKLEAF DR
PHOENIX, AZ 85008 USA
Parcel: 121-08-046

73 OLSKER TIMOTHY D & SHIRLEY L
1158 N OAKLEAF DR
PHOENIX, AZ 85008 USA
Parcel: 121-08-047

74 OLSKER TIMOTHY D/SHIRLEY L
1154 N OAKLEAF
PHOENIX, AZ 85040 USA
Parcel: 121-08-048

75 SPRINGSTEEN LOUISE M
1154 N OAKLEAF DR
PHOENIX, AZ 85008 USA
Parcel: 121-08-049

76 SPRINGSTEEN JANELLE L
1144 N OAKLEAF DR
PHOENIX, AZ 850080000 USA
Parcel: 121-08-051

68 SEKERAK DANIEL P/MERCY W/DEANDA RUBEN WA
1140 N OAKLEAF DR
PHOENIX, AZ 85008 USA
Parcel: 121-08-057 A

69 PERALTA VINCENT SR & CARMEN
1132 N OAKLEAF
PHOENIX, AZ 85008 USA
Parcel: 121-08-058

71 HILL ANN HELEN
1124 N 34TH ST
PHOENIX, AZ 85008 USA
Parcel: 121-08-060

72 DOZAL ALBERTO
1120 N 34TH ST
PHOENIX, AZ 85008 USA
Parcel: 121-08-061

73 LOPEZ JOSE SOCORRO
1118 N 34TH ST
PHOENIX, AZ 85008 USA
Parcel: 121-08-062

76 NAVARRO ANTONIO A/PEREZ MARIA/JUAREZ HIG
1115 N 34TH ST
PHOENIX, AZ 85008 USA
Parcel: 121-08-066

75 BARRON DONNA C TR
1111 N 34TH ST
PHOENIX, AZ 850080000 USA
Parcel: 121-08-065

74 DOYLE FRED & FRANCES
1101 N 34TH ST
PHOENIX, AZ 85008 USA
Parcel: 121-08-063

FEDERAL EMERGENCY MANAGEMENT AGENCY

ELEVATION FORM

O.M.B. NO. 3067-0147
Expires September 30, 2005

PAPERWORK BURDEN DISCLOSURE NOTICE

Public reporting burden for this form is estimated to average 1 hour per response. The burden estimate includes the time for reviewing instructions, searching existing data sources, gathering and maintaining the needed data, and completing, reviewing, and submitting the form. You are not required to respond to this collection of information unless a valid OMB control number appears in the upper right corner of this form. Send comments regarding the accuracy of the burden estimate and any suggestions for reducing this burden to: Information Collections Management, Federal Emergency Management Agency, 500 C Street, SW, Washington DC 20472, Paperwork Reduction Project (3067-0147). Submission of the form is required to obtain or retain benefits under the National Flood Insurance Program. **Please do not send your completed survey to the above address.**

This form must be completed for requests and must be completed and signed by a registered professional engineer or licensed land surveyor. **A FEMA National Flood Insurance Program (NFIP) Elevation Certificate may be submitted in addition to this form for single structure requests.**

For requests to remove a structure on natural grade OR on engineered fill from the Special Flood Hazard Area (SFHA), submit the lowest adjacent grade (the lowest ground touching the structure), including an attached deck or garage. For requests to remove an entire parcel of land from the SFHA, provide the lowest lot elevation; or, if the request involves an area described by metes and bounds, provide the lowest elevation within the metes and bounds description.

1. NFIP Community Number: 040051 Property Name or Address: Papago Terrace Two

2. Are the elevations listed below based on ☑ existing or ☐ proposed conditions? (Check one)

3. What is the elevation datum? If any of the elevations listed below were computed using a datum different than the datum used for the effective Flood Insurance Rate Map (FIRM) (e.g., NGVD 29 or NAVD 88), what was the conversion factor?

   Local Elevation +/- ft. = FIRM Datum

4. For the existing or proposed structures listed below, what are the types of construction? (check all that apply)
   ☐ crawl space ☑ slab on grade ☐ basement/enclosure ☐ other (explain)

5. Has FEMA identified this area as subject to land subsidence or uplift? (see instructions) ☐ Yes ☑ No
   If yes, what is the date of the current releveling? / (month/year)

Lot Number	Block Number	Lowest Lot Elevation	Lowest Adjacent Grade To Structure	Base Flood Elevation	For FEMA Use Only
78	121-08-065	N/A	1137.13	1137.55	
79	121-08-069	N/A	1137.61	1137.51	
70	121-08-059	N/A	1137.09	1137.29	

This certification is to be signed and sealed by a licensed land surveyor, registered professional engineer, or architect authorized by law to certify elevation information. All documents submitted in support of this request are correct to the best of my knowledge. I understand that any false statement may be punishable by fine or imprisonment under Title 18 of the United States Code, Section 1001.

Certifier's Name: James D. Lemon, P.E., R.L.S.	License No.: 12890	Expiration Date: None
Company Name: Landmark Engineering	Telephone No.: 602.861.2005	Fax No.: 602.861.2175
Signature:	Date: 6/16/03	

Registered Professional Engineer (Civil) CERTIFICATE NO. 12890 JAMES D. LEMON Date Signed 6/16/03 ARIZONA, U.S.A.

Seal (optional)

Continued from Page 1.

Lot Number	Block Number	Lowest Lot Elevation	Lowest Adjacent Grade To Structure	Base Flood Elevation	For FEMA Use Only
64	121-08-053	N/A	1137.52	1137.14	
65	121-08-054	N/A	1136.57	1136.89	
66	121-08-055	N/A	1136.57	1136.79	
67	121-08-056	N/A	1136.63	1136.78	
77	121-07-018	N/A	N/A	1137.19	
78	121-07-019	N/A	1137.04	1137.19	
69	121-07-009	N/A	1135.96	1137.02	
68	121-07-008	N/A	1136.59	1136.87	
67	121-07-007	N/A	1136.30	1136.83	
44	121-07-122	N/A	1136.27	1136.80	
43	121-07-121	N/A	N/A	1136.90	
38	121-07-116	N/A	1136.00	1137.39	
37	121-07-115	N/A	1136.12	1137.74	
36	121-07-114	N/A	1136.11	138.30	
30	121-07-108	N/A	1136.25	1138.18	
29	121-07-107	N/A	N/A	1138.62	
28	121-07-106	N/A	1135.91	1138.62	
27	121-07-105	N/A	1136.94	1138.16	
26	121-07-104	N/A	1137.02	1138.34	

This certification is to be signed and sealed by a licensed land surveyor, registered professional engineer, or architect authorized by law to certify elevation information. All documents submitted in support of this request are correct to the best of my knowledge. I understand that any false statement may be punishable by fine or imprisonment under Title 18 of the United States Code, Section 1001.

Certifier's Name: James D. Lemon, P.E., R.L.S.	License No.: 12890	Expiration Date: NONE
Company Name: Landmark Engineering, Inc.	Telephone No.: 602.861.2005	Fax No.: 602.861.2175
Signature:	Date:	

Seal (optional)

FEDERAL EMERGENCY MANAGEMENT AGENCY

ELEVATION FORM

O.M.B. NO. 3067-0147
Expires September 30, 2005

PAPERWORK BURDEN DISCLOSURE NOTICE

Public reporting burden for this form is estimated to average 1 hour per response. The burden estimate includes the time for reviewing instructions, searching existing data sources, gathering and maintaining the needed data, and completing, reviewing, and submitting the form. You are not required to respond to this collection of information unless a valid OMB control number appears in the upper right corner of this form. Send comments regarding the accuracy of the burden estimate and any suggestions for reducing this burden to: Information Collections Management, Federal Emergency Management Agency, 500 C Street, SW, Washington DC 20472, Paperwork Reduction Project (3067-0147). Submission of the form is required to obtain or retain benefits under the National Flood Insurance Program. **Please do not send your completed survey to the above address.**

This form must be completed for requests and must be completed and signed by a registered professional engineer or licensed land surveyor. **A FEMA National Flood Insurance Program (NFIP) Elevation Certificate may be submitted in addition to this form for single structure requests.**

For requests to remove a structure on natural grade OR on engineered fill from the Special Flood Hazard Area (SFHA), submit the lowest adjacent grade (the lowest ground touching the structure), including an attached deck or garage. For requests to remove an entire parcel of land from the SFHA, provide the lowest lot elevation; or, if the request involves an area described by metes and bounds, provide the lowest elevation within the metes and bounds description.

1. NFIP Community Number: 040051 Property Name or Address: Papago Terrace Two

2. Are the elevations listed below based on ☑ existing or ☐ proposed conditions? (Check one)

3. What is the elevation datum? If any of the elevations listed below were computed using a datum different than the datum used for the effective Flood Insurance Rate Map (FIRM) (e.g., NGVD 29 or NAVD 88), what was the conversion factor?

Local Elevation +/- ft. = FIRM Datum

4. For the existing or proposed structures listed below, what are the types of construction? (check all that apply)
☐ crawl space ☑ slab on grade ☐ basement/enclosure ☐ other (explain)

5. Has FEMA identified this area as subject to land subsidence or uplift? (see instructions) ☐ Yes ☑ No
If yes, what is the date of the current releveling? / (month/year)

Lot Number	Block Number	Lowest Lot Elevation	Lowest Adjacent Grade To Structure	Base Flood Elevation	For FEMA Use Only
79	121-08-069	N/A	1137.61	1137.51	
64	121-08-053	N/A	1137.52	1137.14	
65	121-08-054	N/A	1136.94	1136.89	

This certification is to be signed and sealed by a licensed land surveyor, registered professional engineer, or architect authorized by law to certify elevation information. All documents submitted in support of this request are correct to the best of my knowledge. I understand that any false statement may be punishable by fine or imprisonment under Title 18 of the United States Code, Section 1001.

Certifier's Name: James D. Lemon, P.E., R.L.S.	License No.: 12890	Expiration Date: None
Company Name: Landmark Engineering	Telephone No.: 602.861.2005	Fax No.: 602.861.2175
Signature:	Date: 6/16/03	

Registered Professional Engineer (Civil) CERTIFICATE NO. 12890 JAMES D. LEMON Date Signed 6/16/03 ARIZONA, U.S.A.

Seal (optional)

Continued from Page 1.

Lot Number	Block Number	Lowest Lot Elevation	Lowest Adjacent Grade To Structure	Base Flood Elevation	For FEMA Use Only

This certification is to be signed and sealed by a licensed land surveyor, registered professional engineer, or architect authorized by law to certify elevation information. All documents submitted in support of this request are correct to the best of my knowledge. I understand that any false statement may be punishable by fine or imprisonment under Title 18 of the United States Code, Section 1001.

Certifier's Name:	License No.:	Expiration Date:
Company Name:	Telephone No.:	Fax No.:
Signature:	Date:	

Seal (optional)

FEDERAL EMERGENCY MANAGEMENT AGENCY
NATIONAL FLOOD INSURANCE PROGRAM

ELEVATION CERTIFICATE

O.M.B. No. 3067-0077
Expires December 31, 2005

Important: Read the instructions on pages 1 - 7.

SECTION A - PROPERTY OWNER INFORMATION

For Insurance Company Use:
Policy Number
Company NAIC Number

BUILDING OWNER'S NAME
Salahadin, Aberra

BUILDING STREET ADDRESS (Including Apt., Unit, Suite, and/or Bldg. No.) OR P.O. ROUTE AND BOX NO.
3220 E. Willetta Street

CITY	STATE	ZIP CODE
Phoenix	AZ	85008

PROPERTY DESCRIPTION (Lot and Block Numbers, Tax Parcel Number, Legal Description, etc.)
Lot #26 Parcel #121-07-104

BUILDING USE (e.g., Residential, Non-residential, Addition, Accessory, etc. Use a Comments area, if necessary.)
Residential

LATITUDE/LONGITUDE (OPTIONAL) (##° - ##' - ##.##" or ##.#####°)
HORIZONTAL DATUM: ☒ NAD 1927 ☐ NAD 1983
SOURCE: ☒ GPS (Type):____ ☐ USGS Quad Map ☐ Other: ____

SECTION B - FLOOD INSURANCE RATE MAP (FIRM) INFORMATION

B1. NFIP COMMUNITY NAME & COMMUNITY NUMBER	B2. COUNTY NAME	B3. STATE
Phoenix, City of Community Number 040051	Maricopa County	AZ

B4. MAP AND PANEL NUMBER	B5. SUFFIX	B6. FIRM INDEX DATE	B7. FIRM PANEL EFFECTIVE/REVISED DATE	B8. FLOOD ZONE(S)	B9. BASE FLOOD ELEVATION(S) (Zone AO, use depth of flooding)
04013C2135	E	09/30/95	07/19/01	A	1138.34

B10. Indicate the source of the Base Flood Elevation (BFE) data or base flood depth entered in B9.
☐ FIS Profile ☐ FIRM ☐ Community Determined ☒ Other (Describe): Canal Bank

B11. Indicate the elevation datum used for the BFE in B9: ☒ NGVD 1929 ☐ NAVD 1988 ☐ Other (Describe): ____

B12. Is the building located in a Coastal Barrier Resources System (CBRS) area or Otherwise Protected Area (OPA)? ☐ Yes ☒ No Designation Date____

SECTION C - BUILDING ELEVATION INFORMATION (SURVEY REQUIRED)

C1. Building elevations are based on: ☐ Construction Drawings* ☐ Building Under Construction* ☒ Finished Construction

*A new Elevation Certificate will be required when construction of the building is complete.

C2. Building Diagram Number 1 (Select the building diagram most similar to the building for which this certificate is being completed - see pages 6 and 7. If no diagram accurately represents the building, provide a sketch or photograph.)

C3. Elevations – Zones A1-A30, AE, AH, A (with BFE), VE, V1-V30, V (with BFE), AR, AR/A, AR/AE, AR/A1-A30, AR/AH, AR/AO

Complete Items C3.-a-i below according to the building diagram specified in Item C2. State the datum used. If the datum is different from the datum used for the BFE in Section B, convert the datum to that used for the BFE. Show field measurements and datum conversion calculation. Use the space provided or the Comments area of Section D or Section G, as appropriate, to document the datum conversion.

Datum NGVD Conversion/Comments Benchmark: Brass cap in hand hole; elevation =1138.77 ft. @ centerline intersection o f 32nd Street & McDowell Road

Elevation reference mark used C.O. Phoenix Does the elevation reference mark used appear on the FIRM? ☐ Yes ☒ No

- o a) Top of bottom floor (including basement or enclosure) 1138. 08 ft.(m)
- o b) Top of next higher floor ____. __ft.(m)
- o c) Bottom of lowest horizontal structural member (V zones only) ____. __ft.(m)
- o d) Attached garage (top of slab) 1137. 48 ft.(m)
- o e) Lowest elevation of machinery and/or equipment servicing the building (Describe in a Comments area) ____. __ft.(m)
- o f) Lowest adjacent (finished) grade (LAG) 1137 . 02 ft.(m)
- o g) Highest adjacent (finished) grade (HAG) 1137. 96 ft.(m)
- o h) No. of permanent openings (flood vents) within 1 ft. above adjacent grade ____
- o i) Total area of all permanent openings (flood vents) in C3.h _____sq. in. (sq. cm)

License Number, Embossed Seal, Signature, and Date

Registered Professional Engineer (Civil) CERTIFICATE NO. 12890 JAMES D. LEMON Date Signed 6/16/03 ARIZONA, U.S.A.

SECTION D - SURVEYOR, ENGINEER, OR ARCHITECT CERTIFICATION

This certification is to be signed and sealed by a land surveyor, engineer, or architect authorized by law to certify elevation information.
I certify that the information in Sections A, B, and C on this certificate represents my best efforts to interpret the data available.
I understand that any false statement may be punishable by fine or imprisonment under 18 U.S. Code, Section 1001.

CERTIFIER'S NAME	LICENSE NUMBER		
James D. Lemon, P.E., R.L.S.	# 12890		
TITLE	COMPANY NAME		
President	Landmark Engineering, Inc.		
ADDRESS	CITY	STATE	ZIP CODE
7310 North 16th Street, Suite #285	Phoenix	AZ	85020
SIGNATURE	DATE	TELEPHONE	
	6/16/03	602.861.2005	

IMPORTANT: In these spaces, copy the corresponding information from Section A.

For Insurance Company Use:

BUILDING STREET ADDRESS (Including Apt., Unit, Suite, and/or Bldg. No.) OR P.O. ROUTE AND BOX NO.
3220 E. Willetta Street

Policy Number

CITY	STATE	ZIP CODE
Phoenix	AZ	85008

Company NAIC Number

SECTION D - SURVEYOR, ENGINEER, OR ARCHITECT CERTIFICATION (CONTINUED)

Copy both sides of this Elevation Certificate for (1) community official, (2) insurance agent/company, and (3) building owner.

COMMENTS

☒ Check here if attachments

SECTION E - BUILDING ELEVATION INFORMATION (SURVEY NOT REQUIRED) FOR ZONE AO AND ZONE A (WITHOUT BFE)

For Zone AO and Zone A (without BFE), complete Items E1 through E4. If the Elevation Certificate is intended for use as supporting information for a LOMA or LOMR-F, Section C must be completed.

E1. Building Diagram Number _ (Select the building diagram most similar to the building for which this certificate is being completed – see pages 6 and 7. If no diagram accurately represents the building, provide a sketch or photograph.)

E2. The top of the bottom floor (including basement or enclosure) of the building is__ ft.(m) __in.(cm) ☐ above or ☐ below (check one) the highest adjacent grade. (Use natural grade, if available).

E3. For Building Diagrams 6-8 with openings (see page 7), the next higher floor or elevated floor (elevation b) of the building is __ ft.(m) __in.(cm) above the highest adjacent grade. Complete items C3.h and C3.i on front of form.

E4. The top of the platform of machinery and/or equipment servicing the building is __ ft.(m) __in.(cm) ☐ above or ☐ below (check one) the highest adjacent grade. (Use natural grade, if available).

E5. For Zone AO only: If no flood depth number is available, is the top of the bottom floor elevated in accordance with the community's floodplain management ordinance?
☐ Yes ☐ No ☐ Unknown. The local official must certify this information in Section G.

SECTION F - PROPERTY OWNER (OR OWNER'S REPRESENTATIVE) CERTIFICATION

The property owner or owner's authorized representative who completes Sections A, B, C (Items C3.h and C3.i only), and E for Zone A (without a FEMA-issued or community-issued BFE) or Zone AO must sign here. *The statements in Sections A, B, C, and E are correct to the best of my knowledge.*

PROPERTY OWNER'S OR OWNER'S AUTHORIZED REPRESENTATIVE'S NAME

ADDRESS | CITY | STATE | ZIP CODE

SIGNATURE | DATE | TELEPHONE

COMMENTS

☐ Check here if attachments

SECTION G - COMMUNITY INFORMATION (OPTIONAL)

The local official who is authorized by law or ordinance to administer the community's floodplain management ordinance can complete Sections A, B, C (or E), and G of this Elevation Certificate. Complete the applicable item(s) and sign below.

G1. ☐ The information in Section C was taken from other documentation that has been signed and embossed by a licensed surveyor, engineer, or architect who is authorized by state or local law to certify elevation information. (Indicate the source and date of the elevation data in the Comments area below.)

G2. ☐ A community official completed Section E for a building located in Zone A (without a FEMA-issued or community-issued BFE) or Zone AO.

G3. ☐ The following information (Items G4-G9) is provided for community floodplain management purposes.

G4. PERMIT NUMBER	G5. DATE PERMIT ISSUED	G6. DATE CERTIFICATE OF COMPLIANCE/OCCUPANCY ISSUED

G7. This permit has been issued for: ☐ New Construction ☐ Substantial Improvement

G8. Elevation of as-built lowest floor (including basement) of the building is: ____. __ft.(m) Datum: _____

G9. BFE or (in Zone AO) depth of flooding at the building site is: ____. __ ft.(m) Datum: _____

LOCAL OFFICIAL'S NAME | TITLE

COMMUNITY NAME | TELEPHONE

SIGNATURE | DATE

COMMENTS

☐ Check here if attachments

FEDERAL EMERGENCY MANAGEMENT AGENCY
NATIONAL FLOOD INSURANCE PROGRAM

ELEVATION CERTIFICATE

O.M.B. No. 3067-0077
Expires December 31, 2005

Important: Read the instructions on pages 1 - 7.

SECTION A - PROPERTY OWNER INFORMATION

For Insurance Company Use:
Policy Number
Company NAIC Number

BUILDING OWNER'S NAME
Beltran, Rodrigo

BUILDING STREET ADDRESS (Including Apt., Unit, Suite, and/or Bldg. No.) OR P.O. ROUTE AND BOX NO.
3214 E. Willetta Street

CITY	STATE	ZIP CODE
Phoenix	AZ	85008

PROPERTY DESCRIPTION (Lot and Block Numbers, Tax Parcel Number, Legal Description, etc.)
Lot #27 Parcel #121-07-105

BUILDING USE (e.g., Residential, Non-residential, Addition, Accessory, etc. Use a Comments area, if necessary.)
Residential

LATITUDE/LONGITUDE (OPTIONAL) (##° - ##' - ##.##" or ##.#####°)
HORIZONTAL DATUM: ☒ NAD 1927 ☐ NAD 1983
SOURCE: ☒ GPS (Type):_____ ☐ USGS Quad Map ☐ Other: _____

SECTION B - FLOOD INSURANCE RATE MAP (FIRM) INFORMATION

B1. NFIP COMMUNITY NAME & COMMUNITY NUMBER	B2. COUNTY NAME	B3. STATE
Phoenix, City of Community Number 040051	Maricopa County	AZ

B4. MAP AND PANEL NUMBER	B5. SUFFIX	B6. FIRM INDEX DATE	B7. FIRM PANEL EFFECTIVE/REVISED DATE	B8. FLOOD ZONE(S)	B9. BASE FLOOD ELEVATION(S) (Zone AO, use depth of flooding)
04013C2135	E	09/30/95	07/19/01	A	1138.16

B10. Indicate the source of the Base Flood Elevation (BFE) data or base flood depth entered in B9.
☐ FIS Profile ☐ FIRM ☐ Community Determined ☒ Other (Describe): Canal Bank
B11. Indicate the elevation datum used for the BFE in B9: ☒ NGVD 1929 ☐ NAVD 1988 ☐ Other (Describe): _____
B12. Is the building located in a Coastal Barrier Resources System (CBRS) area or Otherwise Protected Area (OPA)? ☐ Yes ☒ No Designation Date_____

SECTION C - BUILDING ELEVATION INFORMATION (SURVEY REQUIRED)

C1. Building elevations are based on: ☐ Construction Drawings* ☐ Building Under Construction* ☒ Finished Construction
*A new Elevation Certificate will be required when construction of the building is complete.

C2. Building Diagram Number 1 (Select the building diagram most similar to the building for which this certificate is being completed - see pages 6 and 7. If no diagram accurately represents the building, provide a sketch or photograph.)

C3. Elevations – Zones A1-A30, AE, AH, A (with BFE), VE, V1-V30, V (with BFE), AR, AR/A, AR/AE, AR/A1-A30, AR/AH, AR/AO
Complete Items C3.-a-i below according to the building diagram specified in Item C2. State the datum used. If the datum is different from the datum used for the BFE in Section B, convert the datum to that used for the BFE. Show field measurements and datum conversion calculation. Use the space provided or the Comments area of Section D or Section G, as appropriate, to document the datum conversion.
Datum NGVD Conversion/Comments Benchmark: Brass cap in hand hole; elevation =1138.77 ft. @ centerline intersection o f 32nd Street & McDowell Road
Elevation reference mark used C.O. Phoenix Does the elevation reference mark used appear on the FIRM? ☐ Yes ☒ No

- o a) Top of bottom floor (including basement or enclosure) 1137. 92 ft.(m)
- o b) Top of next higher floor ____. __ft.(m)
- o c) Bottom of lowest horizontal structural member (V zones only) ____. __ft.(m)
- o d) Attached garage (top of slab) 1137. 27 ft.(m)
- o e) Lowest elevation of machinery and/or equipment servicing the building (Describe in a Comments area) ____. __ft.(m)
- o f) Lowest adjacent (finished) grade (LAG) 1136 . 94 ft.(m)
- o g) Highest adjacent (finished) grade (HAG) 1137. 64 ft.(m)
- o h) No. of permanent openings (flood vents) within 1 ft. above adjacent grade _____
- o i) Total area of all permanent openings (flood vents) in C3.h _____sq. in. (sq. cm)

License Number, Embossed Seal, Signature, and Date

Registered Professional Engineer (Civil) CERTIFICATE NO. 12890 JAMES D. LEMON Date Signed 6/16/03 ARIZONA, U.S.A.

SECTION D - SURVEYOR, ENGINEER, OR ARCHITECT CERTIFICATION

This certification is to be signed and sealed by a land surveyor, engineer, or architect authorized by law to certify elevation information.
I certify that the information in Sections A, B, and C on this certificate represents my best efforts to interpret the data available.
I understand that any false statement may be punishable by fine or imprisonment under 18 U.S. Code, Section 1001.

CERTIFIER'S NAME	LICENSE NUMBER	
James D. Lemon, P.E., R.L.S.	# 12890	
TITLE	COMPANY NAME	
President	Landmark Engineering, Inc.	

ADDRESS	CITY	STATE	ZIP CODE
7310 North 16th Street, Suite #285	Phoenix	AZ	85020

SIGNATURE	DATE	TELEPHONE
	6/16/03	602.861.2005

IMPORTANT: In these spaces, copy the corresponding information from Section A.

BUILDING STREET ADDRESS (Including Apt., Unit, Suite, and/or Bldg. No.) OR P.O. ROUTE AND BOX NO.			For Insurance Company Use:
3214 E. Willetta Street			Policy Number
CITY	STATE	ZIP CODE	Company NAIC Number
Phoenix	AZ	85008	

SECTION D - SURVEYOR, ENGINEER, OR ARCHITECT CERTIFICATION (CONTINUED)

Copy both sides of this Elevation Certificate for (1) community official, (2) insurance agent/company, and (3) building owner.

COMMENTS

☒ Check here if attachments

SECTION E - BUILDING ELEVATION INFORMATION (SURVEY NOT REQUIRED) FOR ZONE AO AND ZONE A (WITHOUT BFE)

For Zone AO and Zone A (without BFE), complete Items E1 through E4. If the Elevation Certificate is intended for use as supporting information for a LOMA or LOMR-F, Section C must be completed.

E1. Building Diagram Number _(Select the building diagram most similar to the building for which this certificate is being completed – see pages 6 and 7. If no diagram accurately represents the building, provide a sketch or photograph.)

E2. The top of the bottom floor (including basement or enclosure) of the building is __ ft.(m) __in.(cm) ☐ above or ☐ below (check one) the highest adjacent grade. (Use natural grade, if available).

E3. For Building Diagrams 6-8 with openings (see page 7), the next higher floor or elevated floor (elevation b) of the building is __ ft.(m) __in.(cm) above the highest adjacent grade. Complete items C3.h and C3.i on front of form.

E4. The top of the platform of machinery and/or equipment servicing the building is __ ft.(m) __in.(cm) ☐ above or ☐ below (check one) the highest adjacent grade. (Use natural grade, if available).

E5. For Zone AO only: If no flood depth number is available, is the top of the bottom floor elevated in accordance with the community's floodplain management ordinance?
☐ Yes ☐ No ☐ Unknown. The local official must certify this information in Section G.

SECTION F - PROPERTY OWNER (OR OWNER'S REPRESENTATIVE) CERTIFICATION

The property owner or owner's authorized representative who completes Sections A, B, C (Items C3.h and C3.i only), and E for Zone A (without a FEMA-issued or community-issued BFE) or Zone AO must sign here. *The statements in Sections A, B, C, and E are correct to the best of my knowledge.*

PROPERTY OWNER'S OR OWNER'S AUTHORIZED REPRESENTATIVE'S NAME

ADDRESS | CITY | STATE | ZIP CODE

SIGNATURE | DATE | TELEPHONE

COMMENTS

☐ Check here if attachments

SECTION G - COMMUNITY INFORMATION (OPTIONAL)

The local official who is authorized by law or ordinance to administer the community's floodplain management ordinance can complete Sections A, B, C (or E), and G of this Elevation Certificate. Complete the applicable item(s) and sign below.

G1. ☐ The information in Section C was taken from other documentation that has been signed and embossed by a licensed surveyor, engineer, or architect who is authorized by state or local law to certify elevation information. (Indicate the source and date of the elevation data in the Comments area below.)

G2. ☐ A community official completed Section E for a building located in Zone A (without a FEMA-issued or community-issued BFE) or Zone AO.

G3. ☐ The following information (Items G4-G9) is provided for community floodplain management purposes.

G4. PERMIT NUMBER	G5. DATE PERMIT ISSUED	G6. DATE CERTIFICATE OF COMPLIANCE/OCCUPANCY ISSUED

G7. This permit has been issued for: ☐ New Construction ☐ Substantial Improvement

G8. Elevation of as-built lowest floor (including basement) of the building is: ____. __ft.(m) Datum: ____

G9. BFE or (in Zone AO) depth of flooding at the building site is: ____. __ ft.(m) Datum: ____

LOCAL OFFICIAL'S NAME | TITLE

COMMUNITY NAME | TELEPHONE

SIGNATURE | DATE

COMMENTS

☐ Check here if attachments

LOT NUMBER : 26 (SEE MAP)

DATE : 08-29-02

PLEASE INDICATE APPROX. MEASUREMENT LOCATION

ADDRESS : 3220 EAST WILLETTA STREET PHX AZ 85008

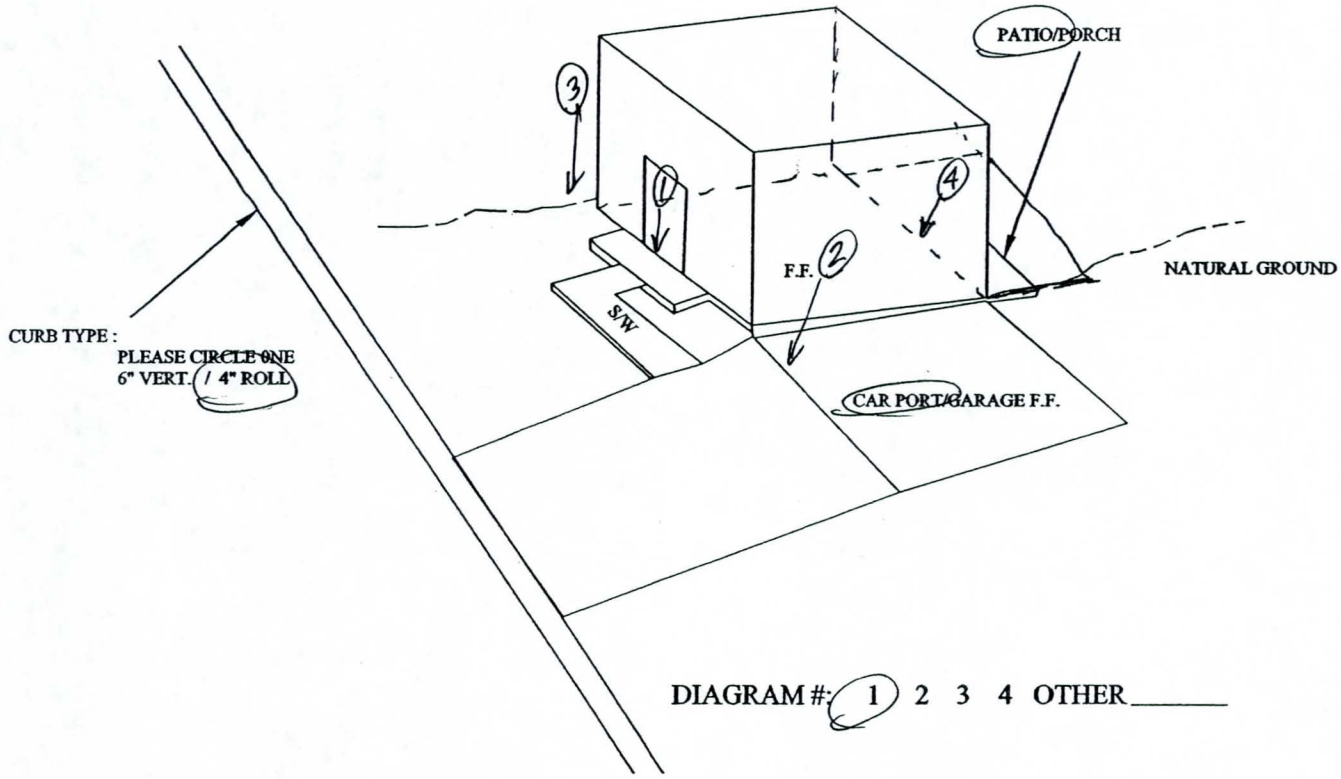

DIAGRAM #: 1 2 3 4 OTHER_____

ELEVATIONS REQUIRED:

1. F.F. RESIDENCE 1138.08
2. F.F. CAR PORT/GARAGE 1137.48
3. L.A.G. 1137.02 (NATURAL GROUND)
4. H.A.G. 1137.96

L.A.G. - LOWEST ADJACENT GRADE (TO F.F.)
H.A.G. - HIGHEST ADJACENT GRADE (TO F.F.)

RELAVENT NOTES FOR ENGINEER : CONCRETE PATIO SLAB LOCATED IMMEDIATELY NEXT TO BUILDING IN BACKYARD.

LANDMARK ENGINEERING, INC.
7310 N. 16TH STREET SUITE 285
PHOENIX, ARIZONA 85020 (602) 861-2005

COP ELEVATION CERT

LOT : 26

FIGURE

LOT NUMBER : 27 (SEE MAP)

DATE : 08-29-02

PLEASE INDICATE APPROX. MEASUREMENT LOCATION

ADDRESS : 3214 EAST WILLETTA STREET PHX AZ 85008

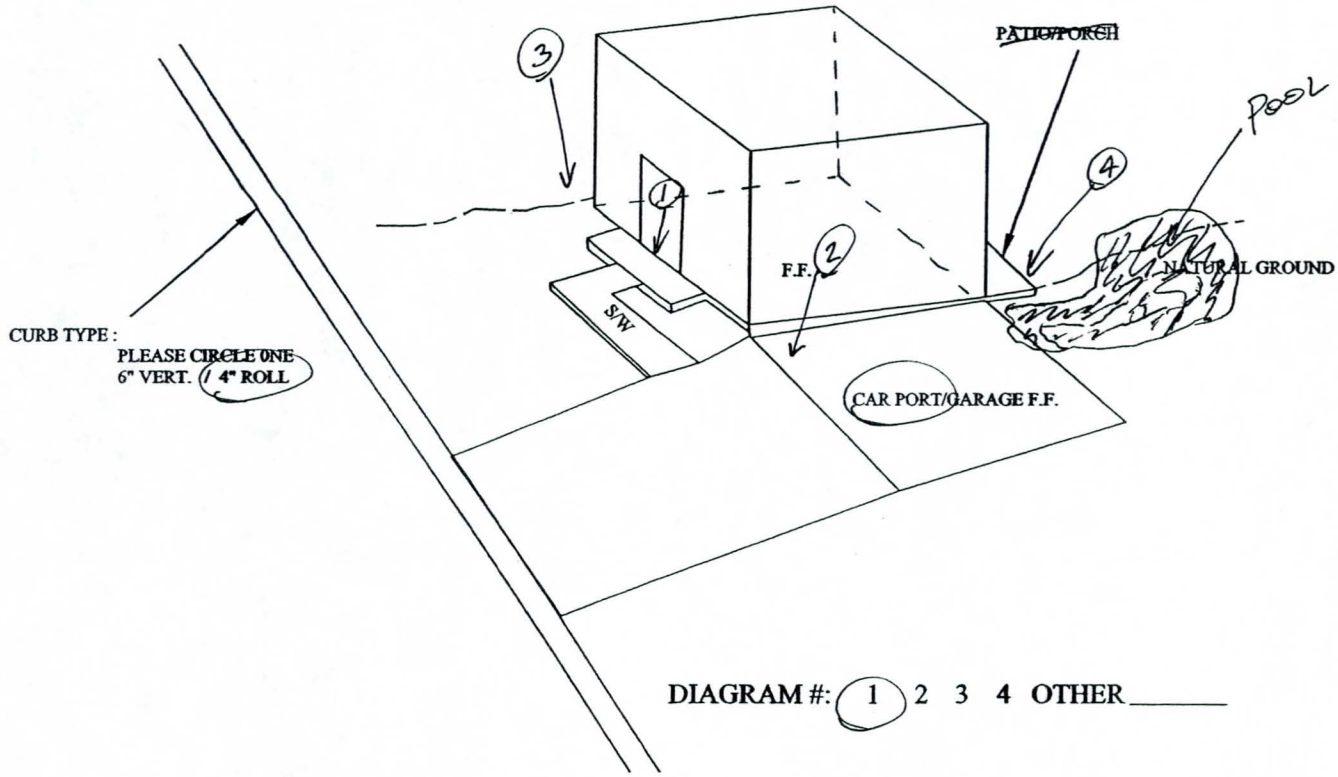

DIAGRAM #: (1) 2 3 4 OTHER _____

ELEVATIONS REQUIRED:

(1) F.F. RESIDENCE	1137.92
(2) F.F. CAR PORT/GARAGE	1137.27
(3) L.A.G.	1136.94 (NATURAL GROUND)
(4) H.A.G.	1137.64

L.A.G. - LOWEST ADJACENT GRADE (TO F.F.)
H.A.G. - HIGHEST ADJACENT GRADE (TO F.F.)

RELAVENT NOTES FOR ENGINEER : * POOL LOCATED ON NE CORNER OF BUILDING
* ALLEY WAY BOUNDS LOT ON WESTSIDE OF RESIDENCE

LANDMARK ENGINEERING, INC.
7310 N. 16TH STREET SUITE 285
PHOENIX, ARIZONA 85020 (602) 861-2005

COP ELEVATION CERT

LOT : 27

FIGURE

FEDERAL EMERGENCY MANAGEMENT AGENCY
NATIONAL FLOOD INSURANCE PROGRAM

ELEVATION CERTIFICATE

O.M.B. No. 3067-0077
Expires December 31, 2005

Important: Read the instructions on pages 1 - 7.

SECTION A - PROPERTY OWNER INFORMATION

For Insurance Company Use:
Policy Number
Company NAIC Number

BUILDING OWNER'S NAME
Vasquez, Elmer Head

BUILDING STREET ADDRESS (Including Apt., Unit, Suite, and/or Bldg. No.) OR P.O. ROUTE AND BOX NO.
3219 E. Willetta Street

CITY	STATE	ZIP CODE
Phoenix	AZ	85008

PROPERTY DESCRIPTION (Lot and Block Numbers, Tax Parcel Number, Legal Description, etc.)
Lot #28 Parcel #121-07-106

BUILDING USE (e.g., Residential, Non-residential, Addition, Accessory, etc. Use a Comments area, if necessary.)
Residential

LATITUDE/LONGITUDE (OPTIONAL) (##° - ##' - ##.##" or ##.#####°)
HORIZONTAL DATUM: ☒ NAD 1927 ☐ NAD 1983
SOURCE: ☒ GPS (Type):____ ☐ USGS Quad Map ☐ Other: ____

SECTION B - FLOOD INSURANCE RATE MAP (FIRM) INFORMATION

B1. NFIP COMMUNITY NAME & COMMUNITY NUMBER	B2. COUNTY NAME	B3. STATE
Phoenix, City of Community Number 040051	Maricopa County	AZ

B4. MAP AND PANEL NUMBER	B5. SUFFIX	B6. FIRM INDEX DATE	B7. FIRM PANEL EFFECTIVE/REVISED DATE	B8. FLOOD ZONE(S)	B9. BASE FLOOD ELEVATION(S) (Zone AO, use depth of flooding)
04013C2135	E	09/30/95	07/19/01	A	1138.62

B10. Indicate the source of the Base Flood Elevation (BFE) data or base flood depth entered in B9.
☐ FIS Profile ☐ FIRM ☐ Community Determined ☒ Other (Describe): Canal Bank

B11. Indicate the elevation datum used for the BFE in B9: ☒ NGVD 1929 ☐ NAVD 1988 ☐ Other (Describe): ____

B12. Is the building located in a Coastal Barrier Resources System (CBRS) area or Otherwise Protected Area (OPA)? ☐ Yes ☒ No Designation Date____

SECTION C - BUILDING ELEVATION INFORMATION (SURVEY REQUIRED)

C1. Building elevations are based on: ☐ Construction Drawings* ☐ Building Under Construction* ☒ Finished Construction
*A new Elevation Certificate will be required when construction of the building is complete.

C2. Building Diagram Number 1 (Select the building diagram most similar to the building for which this certificate is being completed - see pages 6 and 7. If no diagram accurately represents the building, provide a sketch or photograph.)

C3. Elevations – Zones A1-A30, AE, AH, A (with BFE), VE, V1-V30, V (with BFE), AR, AR/A, AR/AE, AR/A1-A30, AR/AH, AR/AO
Complete Items C3.-a-i below according to the building diagram specified in Item C2. State the datum used. If the datum is different from the datum used for the BFE in Section B, convert the datum to that used for the BFE. Show field measurements and datum conversion calculation. Use the space provided or the Comments area of Section D or Section G, as appropriate, to document the datum conversion.
Datum NGVD Conversion/Comments Benchmark: Brass cap in hand hole; elevation =1138.77 ft. @ centerline intersection o f 32nd Street & McDowell Road
Elevation reference mark used C.O. Phoenix Does the elevation reference mark used appear on the FIRM? ☐ Yes ☒ No

- o a) Top of bottom floor (including basement or enclosure) 1136. 18 ft.(m)
- o b) Top of next higher floor ____. __ft.(m)
- o c) Bottom of lowest horizontal structural member (V zones only) ____. __ft.(m)
- o d) Attached garage (top of slab) 1136. 70 ft.(m)
- o e) Lowest elevation of machinery and/or equipment servicing the building (Describe in a Comments area) ____. __ft.(m)
- o f) Lowest adjacent (finished) grade (LAG) 1135. 91 ft.(m)
- o g) Highest adjacent (finished) grade (HAG) 1136. 24 ft.(m)
- o h) No. of permanent openings (flood vents) within 1 ft. above adjacent grade _____
- o i) Total area of all permanent openings (flood vents) in C3.h _____sq. in. (sq. cm)

License Number, Embossed Seal, Signature, and Date

Registered Professional Engineer (Civil) CERTIFICATE NO. 12890 JAMES D. LEMON Date Signed 6/16/03 ARIZONA, U.S.A.

SECTION D - SURVEYOR, ENGINEER, OR ARCHITECT CERTIFICATION

This certification is to be signed and sealed by a land surveyor, engineer, or architect authorized by law to certify elevation information.
I certify that the information in Sections A, B, and C on this certificate represents my best efforts to interpret the data available.
I understand that any false statement may be punishable by fine or imprisonment under 18 U.S. Code, Section 1001.

CERTIFIER'S NAME	LICENSE NUMBER		
James D. Lemon, P.E., R.L.S.	# 12890		
TITLE	COMPANY NAME		
President	Landmark Engineering, Inc.		
ADDRESS	CITY	STATE	ZIP CODE
7310 North 16th Street, Suite #285	Phoenix	AZ	85020
SIGNATURE	DATE	TELEPHONE	
	6/16/03	602.861.2005	

IMPORTANT: In these spaces, copy the corresponding information from Section A.

BUILDING STREET ADDRESS (Including Apt., Unit, Suite, and/or Bldg. No.) OR P.O. ROUTE AND BOX NO.			For Insurance Company Use:
3219 E. Willetta Street			Policy Number
CITY	STATE	ZIP CODE	Company NAIC Number
Phoenix	AZ	85008	

SECTION D - SURVEYOR, ENGINEER, OR ARCHITECT CERTIFICATION (CONTINUED)

Copy both sides of this Elevation Certificate for (1) community official, (2) insurance agent/company, and (3) building owner.

COMMENTS

☒ Check here if attachments

SECTION E - BUILDING ELEVATION INFORMATION (SURVEY NOT REQUIRED) FOR ZONE AO AND ZONE A (WITHOUT BFE)

For Zone AO and Zone A (without BFE), complete Items E1 through E4. If the Elevation Certificate is intended for use as supporting information for a LOMA or LOMR-F, Section C must be completed.

E1. Building Diagram Number _(Select the building diagram most similar to the building for which this certificate is being completed – see pages 6 and 7. If no diagram accurately represents the building, provide a sketch or photograph.)

E2. The top of the bottom floor (including basement or enclosure) of the building is __ ft.(m) __in.(cm) ☐ above or ☐ below (check one) the highest adjacent grade. (Use natural grade, if available).

E3. For Building Diagrams 6-8 with openings (see page 7), the next higher floor or elevated floor (elevation b) of the building is __ ft.(m) __in.(cm) above the highest adjacent grade. Complete items C3.h and C3.i on front of form.

E4. The top of the platform of machinery and/or equipment servicing the building is __ ft.(m) __in.(cm) ☐ above or ☐ below (check one) the highest adjacent grade. (Use natural grade, if available).

E5. For Zone AO only: If no flood depth number is available, is the top of the bottom floor elevated in accordance with the community's floodplain management ordinance?
☐ Yes ☐ No ☐ Unknown. The local official must certify this information in Section G.

SECTION F - PROPERTY OWNER (OR OWNER'S REPRESENTATIVE) CERTIFICATION

The property owner or owner's authorized representative who completes Sections A, B, C (Items C3.h and C3.i only), and E for Zone A (without a FEMA-issued or community-issued BFE) or Zone AO must sign here. *The statements in Sections A, B, C, and E are correct to the best of my knowledge.*

PROPERTY OWNER'S OR OWNER'S AUTHORIZED REPRESENTATIVE'S NAME

ADDRESS | CITY | STATE | ZIP CODE

SIGNATURE | DATE | TELEPHONE

COMMENTS

☐ Check here if attachments

SECTION G - COMMUNITY INFORMATION (OPTIONAL)

The local official who is authorized by law or ordinance to administer the community's floodplain management ordinance can complete Sections A, B, C (or E), and G of this Elevation Certificate. Complete the applicable item(s) and sign below.

G1. ☐ The information in Section C was taken from other documentation that has been signed and embossed by a licensed surveyor, engineer, or architect who is authorized by state or local law to certify elevation information. (Indicate the source and date of the elevation data in the Comments area below.)

G2. ☐ A community official completed Section E for a building located in Zone A (without a FEMA-issued or community-issued BFE) or Zone AO.

G3. ☐ The following information (Items G4-G9) is provided for community floodplain management purposes.

G4. PERMIT NUMBER	G5. DATE PERMIT ISSUED	G6. DATE CERTIFICATE OF COMPLIANCE/OCCUPANCY ISSUED

G7. This permit has been issued for: ☐ New Construction ☐ Substantial Improvement

G8. Elevation of as-built lowest floor (including basement) of the building is: ____. __ft.(m) Datum: _____

G9. BFE or (in Zone AO) depth of flooding at the building site is: ____. __ ft.(m) Datum: _____

LOCAL OFFICIAL'S NAME | TITLE

COMMUNITY NAME | TELEPHONE

SIGNATURE | DATE

COMMENTS

☐ Check here if attachments

LOT NUMBER : 28 (SEE MAP)

DATE : 08-29-02

PLEASE INDICATE APPROX. MEASUREMENT LOCATION

ADDRESS : 3219 E. WILLETTA STREET PHX AZ 85008

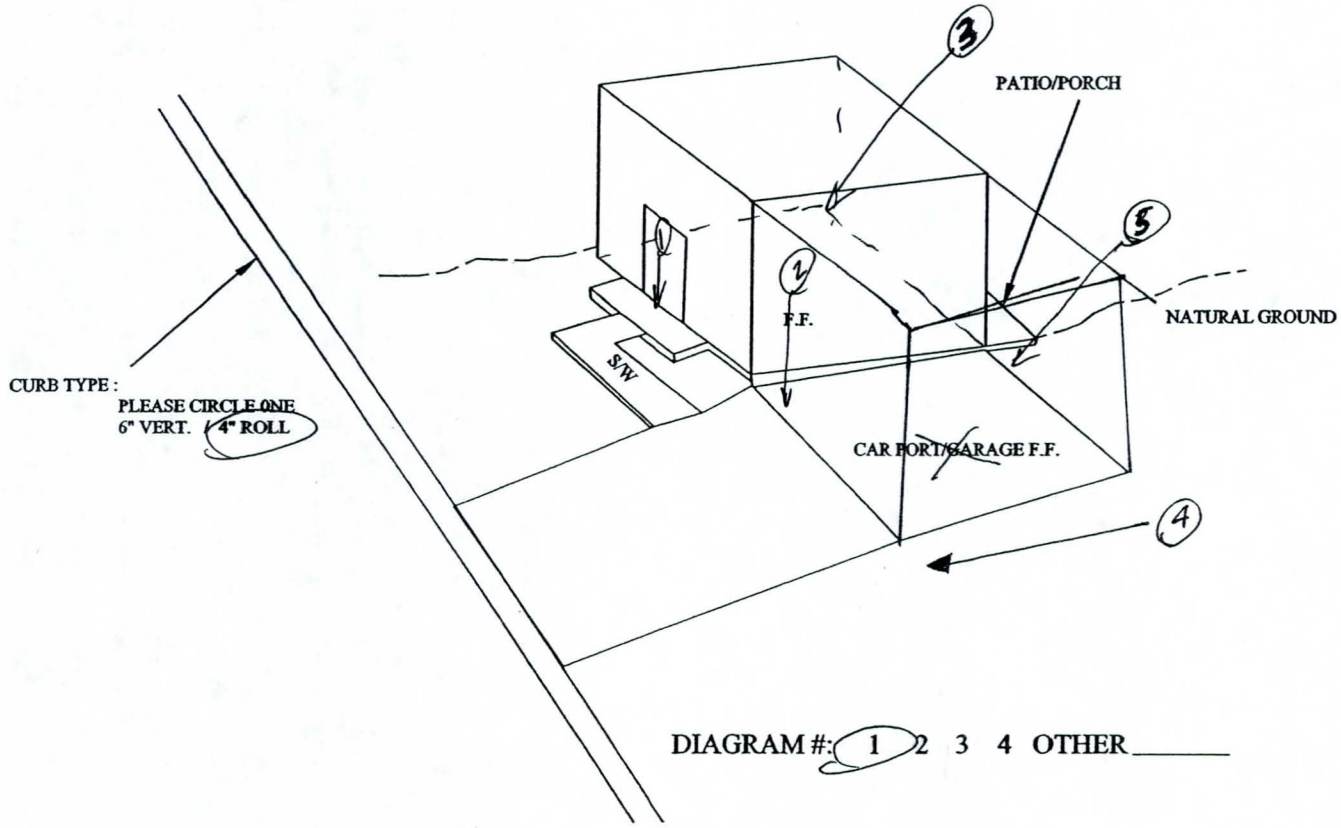

DIAGRAM #: 1 2 3 4 OTHER _____

ELEVATIONS REQUIRED:

① F.F. RESIDENCE	1136.18
② F.F. CAR PORT/GARAGE	1136.70
③ L.A.G.	1135.91
④ H.A.G.	1136.24 (CONC.)

L.A.G. - LOWEST ADJACENT GRADE (TO F.F.)
H.A.G. - HIGHEST ADJACENT GRADE (TO F.F.)

⑤ 1136.17

* ADDING ONTO HOUSE TO SOUTH. BUILDING PERMIT APPROVED BY CITY OF PHOENIX.

RELAVENT NOTES FOR ENGINEER : *NO CARPORT/GARAGE ON LOT – CONCRETE PAD LOCATED IN FRONT OF HOUSE

LANDMARK ENGINEERING, INC.
7310 N. 16TH STREET SUITE 285
PHOENIX, ARIZONA 85020 (602) 861-2005

COP ELEVATION CERT

LOT : 28

FIGURE

FEDERAL EMERGENCY MANAGEMENT AGENCY

ELEVATION FORM

O.M.B. NO. 3067-0147
Expires September 30, 2005

PAPERWORK BURDEN DISCLOSURE NOTICE

Public reporting burden for this form is estimated to average 1 hour per response. The burden estimate includes the time for reviewing instructions, searching existing data sources, gathering and maintaining the needed data, and completing, reviewing, and submitting the form. You are not required to respond to this collection of information unless a valid OMB control number appears in the upper right corner of this form. Send comments regarding the accuracy of the burden estimate and any suggestions for reducing this burden to: Information Collections Management, Federal Emergency Management Agency, 500 C Street, SW, Washington DC 20472, Paperwork Reduction Project (3067-0147). Submission of the form is required to obtain or retain benefits under the National Flood Insurance Program. **Please do not send your completed survey to the above address.**

This form must be completed for requests and must be completed and signed by a registered professional engineer or licensed land surveyor. **A FEMA National Flood Insurance Program (NFIP) Elevation Certificate may be submitted in addition to this form for single structure requests.**

For requests to remove a structure on natural grade OR on engineered fill from the Special Flood Hazard Area (SFHA), submit the lowest adjacent grade (the lowest ground touching the structure), including an attached deck or garage. For requests to remove an entire parcel of land from the SFHA, provide the lowest lot elevation; or, if the request involves an area described by metes and bounds, provide the lowest elevation within the metes and bounds description.

1. NFIP Community Number: 040051 Property Name or Address: Papago Terrace Two

2. Are the elevations listed below based on ☑ existing or ☐ proposed conditions? (Check one)

3. What is the elevation datum? If any of the elevations listed below were computed using a datum different than the datum used for the effective Flood Insurance Rate Map (FIRM) (e.g., NGVD 29 or NAVD 88), what was the conversion factor?

   Local Elevation +/- ft. = FIRM Datum

4. For the existing or proposed structures listed below, what are the types of construction? (check all that apply)
   ☐ crawl space ☑ slab on grade ☐ basement/enclosure ☐ other (explain)

5. Has FEMA identified this area as subject to land subsidence or uplift? (see instructions) ☐ Yes ☑ No
   If yes, what is the date of the current releveling? / (month/year)

Lot Number	Block Number	Lowest Lot Elevation	Lowest Adjacent Grade To Structure	Base Flood Elevation	For FEMA Use Only
78	121-08-065	N/A	1137.13	1137.55	
79	121-08-069	N/A	1137.61	1137.51	
70	121-08-059	N/A	1137.09	1137.29	

This certification is to be signed and sealed by a licensed land surveyor, registered professional engineer, or architect authorized by law to certify elevation information. All documents submitted in support of this request are correct to the best of my knowledge. I understand that any false statement may be punishable by fine or imprisonment under Title 18 of the United States Code, Section 1001.

Certifier's Name: James D. Lemon, P.E., R.L.S.	License No.: 12890	Expiration Date: None
Company Name: Landmark Engineering	Telephone No.: 602.861.2005	Fax No.: 602.861.2175
Signature:	Date: 6/16/03	

Registered Professional Engineer (Civil) CERTIFICATE NO. 12890 JAMES D. LEMON Date Signed 6/16/03 ARIZONA, U.S.A.

Seal (optional)

Continued from Page 1.

Lot Number	Block Number	Lowest Lot Elevation	Lowest Adjacent Grade To Structure	Base Flood Elevation	For FEMA Use Only
64	121-08-053	N/A	1137.52	1137.14	
65	121-08-054	N/A	1136.57	1136.89	
66	121-08-055	N/A	1136.57	1136.79	
67	121-08-056	N/A	1136.63	1136.78	
77	121-07-018	N/A	N/A	1137.19	
78	121-07-019	N/A	1137.04	1137.19	
69	121-07-009	N/A	1135.96	1137.02	
68	121-07-008	N/A	1136.59	1136.87	
67	121-07-007	N/A	1136.30	1136.83	
44	121-07-122	N/A	1136.27	1136.80	
43	121-07-121	N/A	N/A	1136.90	
38	121-07-116	N/A	1136.00	1137.39	
37	121-07-115	N/A	1136.12	1137.74	
36	121-07-114	N/A	1136.11	138.30	
30	121-07-108	N/A	1136.25	1138.18	
29	121-07-107	N/A	N/A	1138.62	
28	121-07-106	N/A	1135.91	1138.62	
27	121-07-105	N/A	1136.94	1138.16	
26	121-07-104	N/A	1137.02	1138.34	

This certification is to be signed and sealed by a licensed land surveyor, registered professional engineer, or architect authorized by law to certify elevation information. All documents submitted in support of this request are correct to the best of my knowledge. I understand that any false statement may be punishable by fine or imprisonment under Title 18 of the United States Code, Section 1001.

Certifier's Name: James D. Lemon, P.E., R.L.S.	License No.: 12890	Expiration Date: NONE
Company Name: Landmark Engineering, Inc.	Telephone No.: 602.861.2005	Fax No.: 602.861.2175
Signature:	Date:	

Seal (optional)

FEDERAL EMERGENCY MANAGEMENT AGENCY

ELEVATION FORM

O.M.B. NO. 3067-0147
Expires September 30, 2005

PAPERWORK BURDEN DISCLOSURE NOTICE

Public reporting burden for this form is estimated to average 1 hour per response. The burden estimate includes the time for reviewing instructions, searching existing data sources, gathering and maintaining the needed data, and completing, reviewing, and submitting the form. You are not required to respond to this collection of information unless a valid OMB control number appears in the upper right corner of this form. Send comments regarding the accuracy of the burden estimate and any suggestions for reducing this burden to: Information Collections Management, Federal Emergency Management Agency, 500 C Street, SW, Washington DC 20472, Paperwork Reduction Project (3067-0147). Submission of the form is required to obtain or retain benefits under the National Flood Insurance Program. **Please do not send your completed survey to the above address.**

This form must be completed for requests and must be completed and signed by a registered professional engineer or licensed land surveyor. **A FEMA National Flood Insurance Program (NFIP) Elevation Certificate may be submitted in addition to this form for single structure requests.**

For requests to remove a structure on natural grade OR on engineered fill from the Special Flood Hazard Area (SFHA), submit the lowest adjacent grade (the lowest ground touching the structure), including an attached deck or garage. For requests to remove an entire parcel of land from the SFHA, provide the lowest lot elevation; or, if the request involves an area described by metes and bounds, provide the lowest elevation within the metes and bounds description.

1. NFIP Community Number: 040051 Property Name or Address: Papago Terrace Two

2. Are the elevations listed below based on ☑ existing or ☐ proposed conditions? (Check one)

3. What is the elevation datum? If any of the elevations listed below were computed using a datum different than the datum used for the effective Flood Insurance Rate Map (FIRM) (e.g., NGVD 29 or NAVD 88), what was the conversion factor?

Local Elevation +/- ft. = FIRM Datum

4. For the existing or proposed structures listed below, what are the types of construction? (check all that apply)
☐ crawl space ☑ slab on grade ☐ basement/enclosure ☐ other (explain)

5. Has FEMA identified this area as subject to land subsidence or uplift? (see instructions) ☐ Yes ☑ No
If yes, what is the date of the current releveling? / (month/year)

Lot Number	Block Number	Lowest Lot Elevation	Lowest Adjacent Grade To Structure	Base Flood Elevation	For FEMA Use Only
79	121-08-069	N/A	1137.61	1137.51	
64	121-08-053	N/A	1137.52	1137.14	
65	121-08-054	N/A	1136.94	1136.89	

This certification is to be signed and sealed by a licensed land surveyor, registered professional engineer, or architect authorized by law to certify elevation information. All documents submitted in support of this request are correct to the best of my knowledge. I understand that any false statement may be punishable by fine or imprisonment under Title 18 of the United States Code, Section 1001.

Certifier's Name: James D. Lemon, P.E., R.L.S.	License No.: 12890	Expiration Date: None
Company Name: Landmark Engineering	Telephone No.: 602.861.2005	Fax No.: 602.861.2175
Signature:	Date: 6/16/03	

Registered Professional Engineer (Civil) CERTIFICATE NO. 12890 JAMES D. LEMON Date Signed 6/16/03 ARIZONA, U.S.A.

Seal (optional)

Continued from Page 1.

Lot Number	Block Number	Lowest Lot Elevation	Lowest Adjacent Grade To Structure	Base Flood Elevation	For FEMA Use Only

This certification is to be signed and sealed by a licensed land surveyor, registered professional engineer, or architect authorized by law to certify elevation information. All documents submitted in support of this request are correct to the best of my knowledge. I understand that any false statement may be punishable by fine or imprisonment under Title 18 of the United States Code, Section 1001.

Certifier's Name:	License No.:	Expiration Date:
Company Name:	Telephone No.:	Fax No.:
Signature:	Date:	

Seal (optional)

FEDERAL EMERGENCY MANAGEMENT AGENCY
NATIONAL FLOOD INSURANCE PROGRAM

ELEVATION CERTIFICATE

O.M.B. No. 3067-0077
Expires December 31, 2005

Important: Read the instructions on pages 1 - 7.

SECTION A - PROPERTY OWNER INFORMATION

For Insurance Company Use:
Policy Number
Company NAIC Number

BUILDING OWNER'S NAME
Salahadin, Aberra

BUILDING STREET ADDRESS (Including Apt., Unit, Suite, and/or Bldg. No.) OR P.O. ROUTE AND BOX NO.
3220 E. Willetta Street

CITY	STATE	ZIP CODE
Phoenix	AZ	85008

PROPERTY DESCRIPTION (Lot and Block Numbers, Tax Parcel Number, Legal Description, etc.)
Lot #26 Parcel #121-07-104

BUILDING USE (e.g., Residential, Non-residential, Addition, Accessory, etc. Use a Comments area, if necessary.)
Residential

LATITUDE/LONGITUDE (OPTIONAL) (##° - ##' - ##.##" or ##.#####°)
HORIZONTAL DATUM: ☒ NAD 1927 ☐ NAD 1983
SOURCE: ☒ GPS (Type):____ ☐ USGS Quad Map ☐ Other: ____

SECTION B - FLOOD INSURANCE RATE MAP (FIRM) INFORMATION

B1. NFIP COMMUNITY NAME & COMMUNITY NUMBER	B2. COUNTY NAME	B3. STATE
Phoenix, City of Community Number 040051	Maricopa County	AZ

B4. MAP AND PANEL NUMBER	B5. SUFFIX	B6. FIRM INDEX DATE	B7. FIRM PANEL EFFECTIVE/REVISED DATE	B8. FLOOD ZONE(S)	B9. BASE FLOOD ELEVATION(S) (Zone AO, use depth of flooding)
04013C2135	E	09/30/95	07/19/01	A	1138.34

B10. Indicate the source of the Base Flood Elevation (BFE) data or base flood depth entered in B9.
☐ FIS Profile ☐ FIRM ☐ Community Determined ☒ Other (Describe): Canal Bank

B11. Indicate the elevation datum used for the BFE in B9: ☒ NGVD 1929 ☐ NAVD 1988 ☐ Other (Describe): ____

B12. Is the building located in a Coastal Barrier Resources System (CBRS) area or Otherwise Protected Area (OPA)? ☐ Yes ☒ No Designation Date____

SECTION C - BUILDING ELEVATION INFORMATION (SURVEY REQUIRED)

C1. Building elevations are based on: ☐ Construction Drawings* ☐ Building Under Construction* ☒ Finished Construction

*A new Elevation Certificate will be required when construction of the building is complete.

C2. Building Diagram Number 1 (Select the building diagram most similar to the building for which this certificate is being completed - see pages 6 and 7. If no diagram accurately represents the building, provide a sketch or photograph.)

C3. Elevations – Zones A1-A30, AE, AH, A (with BFE), VE, V1-V30, V (with BFE), AR, AR/A, AR/AE, AR/A1-A30, AR/AH, AR/AO

Complete Items C3.-a-i below according to the building diagram specified in Item C2. State the datum used. If the datum is different from the datum used for the BFE in Section B, convert the datum to that used for the BFE. Show field measurements and datum conversion calculation. Use the space provided or the Comments area of Section D or Section G, as appropriate, to document the datum conversion.

Datum NGVD Conversion/Comments Benchmark: Brass cap in hand hole; elevation =1138.77 ft. @ centerline intersection o f 32nd Street & McDowell Road

Elevation reference mark used C.O. Phoenix Does the elevation reference mark used appear on the FIRM? ☐ Yes ☒ No

- o a) Top of bottom floor (including basement or enclosure) 1138. 08 ft.(m)
- o b) Top of next higher floor ____. __ft.(m)
- o c) Bottom of lowest horizontal structural member (V zones only) ____. __ft.(m)
- o d) Attached garage (top of slab) 1137. 48 ft.(m)
- o e) Lowest elevation of machinery and/or equipment servicing the building (Describe in a Comments area) ____. __ft.(m)
- o f) Lowest adjacent (finished) grade (LAG) 1137 . 02 ft.(m)
- o g) Highest adjacent (finished) grade (HAG) 1137. 96 ft.(m)
- o h) No. of permanent openings (flood vents) within 1 ft. above adjacent grade ____
- o i) Total area of all permanent openings (flood vents) in C3.h _____sq. in. (sq. cm)

License Number, Embossed Seal, Signature, and Date

Registered Professional Engineer (Civil) CERTIFICATE NO. 12890 JAMES D. LEMON Date Signed 6/16/03 ARIZONA, U.S.A.

SECTION D - SURVEYOR, ENGINEER, OR ARCHITECT CERTIFICATION

This certification is to be signed and sealed by a land surveyor, engineer, or architect authorized by law to certify elevation information.
I certify that the information in Sections A, B, and C on this certificate represents my best efforts to interpret the data available.
I understand that any false statement may be punishable by fine or imprisonment under 18 U.S. Code, Section 1001.

CERTIFIER'S NAME	LICENSE NUMBER		
James D. Lemon, P.E., R.L.S.	# 12890		
TITLE	COMPANY NAME		
President	Landmark Engineering, Inc.		
ADDRESS	CITY	STATE	ZIP CODE
7310 North 16th Street, Suite #285	Phoenix	AZ	85020
SIGNATURE	DATE	TELEPHONE	
	6/16/03	602.861.2005	

IMPORTANT: In these spaces, copy the corresponding information from Section A.

For Insurance Company Use:

BUILDING STREET ADDRESS (Including Apt., Unit, Suite, and/or Bldg. No.) OR P.O. ROUTE AND BOX NO.
3220 E. Willetta Street

Policy Number

CITY	STATE	ZIP CODE
Phoenix	AZ	85008

Company NAIC Number

SECTION D - SURVEYOR, ENGINEER, OR ARCHITECT CERTIFICATION (CONTINUED)

Copy both sides of this Elevation Certificate for (1) community official, (2) insurance agent/company, and (3) building owner.

COMMENTS

☒ Check here if attachments

SECTION E - BUILDING ELEVATION INFORMATION (SURVEY NOT REQUIRED) FOR ZONE AO AND ZONE A (WITHOUT BFE)

For Zone AO and Zone A (without BFE), complete Items E1 through E4. If the Elevation Certificate is intended for use as supporting information for a LOMA or LOMR-F, Section C must be completed.

E1. Building Diagram Number _ (Select the building diagram most similar to the building for which this certificate is being completed – see pages 6 and 7. If no diagram accurately represents the building, provide a sketch or photograph.)

E2. The top of the bottom floor (including basement or enclosure) of the building is__ ft.(m) __in.(cm) ☐ above or ☐ below (check one) the highest adjacent grade. (Use natural grade, if available).

E3. For Building Diagrams 6-8 with openings (see page 7), the next higher floor or elevated floor (elevation b) of the building is __ ft.(m) __in.(cm) above the highest adjacent grade. Complete items C3.h and C3.i on front of form.

E4. The top of the platform of machinery and/or equipment servicing the building is __ ft.(m) __in.(cm) ☐ above or ☐ below (check one) the highest adjacent grade. (Use natural grade, if available).

E5. For Zone AO only: If no flood depth number is available, is the top of the bottom floor elevated in accordance with the community's floodplain management ordinance?
☐ Yes ☐ No ☐ Unknown. The local official must certify this information in Section G.

SECTION F - PROPERTY OWNER (OR OWNER'S REPRESENTATIVE) CERTIFICATION

The property owner or owner's authorized representative who completes Sections A, B, C (Items C3.h and C3.i only), and E for Zone A (without a FEMA-issued or community-issued BFE) or Zone AO must sign here. *The statements in Sections A, B, C, and E are correct to the best of my knowledge.*

PROPERTY OWNER'S OR OWNER'S AUTHORIZED REPRESENTATIVE'S NAME

ADDRESS | CITY | STATE | ZIP CODE

SIGNATURE | DATE | TELEPHONE

COMMENTS

☐ Check here if attachments

SECTION G - COMMUNITY INFORMATION (OPTIONAL)

The local official who is authorized by law or ordinance to administer the community's floodplain management ordinance can complete Sections A, B, C (or E), and G of this Elevation Certificate. Complete the applicable item(s) and sign below.

G1. ☐ The information in Section C was taken from other documentation that has been signed and embossed by a licensed surveyor, engineer, or architect who is authorized by state or local law to certify elevation information. (Indicate the source and date of the elevation data in the Comments area below.)

G2. ☐ A community official completed Section E for a building located in Zone A (without a FEMA-issued or community-issued BFE) or Zone AO.

G3. ☐ The following information (Items G4-G9) is provided for community floodplain management purposes.

G4. PERMIT NUMBER	G5. DATE PERMIT ISSUED	G6. DATE CERTIFICATE OF COMPLIANCE/OCCUPANCY ISSUED

G7. This permit has been issued for: ☐ New Construction ☐ Substantial Improvement

G8. Elevation of as-built lowest floor (including basement) of the building is: ____. __ft.(m) Datum: _____

G9. BFE or (in Zone AO) depth of flooding at the building site is: ____. __ ft.(m) Datum: _____

LOCAL OFFICIAL'S NAME | TITLE

COMMUNITY NAME | TELEPHONE

SIGNATURE | DATE

COMMENTS

☐ Check here if attachments

FEDERAL EMERGENCY MANAGEMENT AGENCY
NATIONAL FLOOD INSURANCE PROGRAM

ELEVATION CERTIFICATE

O.M.B. No. 3067-0077
Expires December 31, 2005

Important: Read the instructions on pages 1 - 7.

SECTION A - PROPERTY OWNER INFORMATION

For Insurance Company Use:
Policy Number
Company NAIC Number

BUILDING OWNER'S NAME
Beltran, Rodrigo

BUILDING STREET ADDRESS (Including Apt., Unit, Suite, and/or Bldg. No.) OR P.O. ROUTE AND BOX NO.
3214 E. Willetta Street

CITY	STATE	ZIP CODE
Phoenix	AZ	85008

PROPERTY DESCRIPTION (Lot and Block Numbers, Tax Parcel Number, Legal Description, etc.)
Lot #27 Parcel #121-07-105

BUILDING USE (e.g., Residential, Non-residential, Addition, Accessory, etc. Use a Comments area, if necessary.)
Residential

LATITUDE/LONGITUDE (OPTIONAL) (##° - ##' - ##.##" or ##.#####°)
HORIZONTAL DATUM: ☒ NAD 1927 ☐ NAD 1983
SOURCE: ☒ GPS (Type):_____ ☐ USGS Quad Map ☐ Other: _____

SECTION B - FLOOD INSURANCE RATE MAP (FIRM) INFORMATION

B1. NFIP COMMUNITY NAME & COMMUNITY NUMBER	B2. COUNTY NAME	B3. STATE
Phoenix, City of Community Number 040051	Maricopa County	AZ

B4. MAP AND PANEL NUMBER	B5. SUFFIX	B6. FIRM INDEX DATE	B7. FIRM PANEL EFFECTIVE/REVISED DATE	B8. FLOOD ZONE(S)	B9. BASE FLOOD ELEVATION(S) (Zone AO, use depth of flooding)
04013C2135	E	09/30/95	07/19/01	A	1138.16

B10. Indicate the source of the Base Flood Elevation (BFE) data or base flood depth entered in B9.
☐ FIS Profile ☐ FIRM ☐ Community Determined ☒ Other (Describe): Canal Bank
B11. Indicate the elevation datum used for the BFE in B9: ☒ NGVD 1929 ☐ NAVD 1988 ☐ Other (Describe): _____
B12. Is the building located in a Coastal Barrier Resources System (CBRS) area or Otherwise Protected Area (OPA)? ☐ Yes ☒ No Designation Date_____

SECTION C - BUILDING ELEVATION INFORMATION (SURVEY REQUIRED)

C1. Building elevations are based on: ☐ Construction Drawings* ☐ Building Under Construction* ☒ Finished Construction
*A new Elevation Certificate will be required when construction of the building is complete.

C2. Building Diagram Number 1 (Select the building diagram most similar to the building for which this certificate is being completed - see pages 6 and 7. If no diagram accurately represents the building, provide a sketch or photograph.)

C3. Elevations – Zones A1-A30, AE, AH, A (with BFE), VE, V1-V30, V (with BFE), AR, AR/A, AR/AE, AR/A1-A30, AR/AH, AR/AO
Complete Items C3.-a-i below according to the building diagram specified in Item C2. State the datum used. If the datum is different from the datum used for the BFE in Section B, convert the datum to that used for the BFE. Show field measurements and datum conversion calculation. Use the space provided or the Comments area of Section D or Section G, as appropriate, to document the datum conversion.
Datum NGVD Conversion/Comments Benchmark: Brass cap in hand hole; elevation =1138.77 ft. @ centerline intersection o f 32nd Street & McDowell Road
Elevation reference mark used C.O. Phoenix Does the elevation reference mark used appear on the FIRM? ☐ Yes ☒ No

- o a) Top of bottom floor (including basement or enclosure) 1137. 92 ft.(m)
- o b) Top of next higher floor ____. __ft.(m)
- o c) Bottom of lowest horizontal structural member (V zones only) ____. __ft.(m)
- o d) Attached garage (top of slab) 1137. 27 ft.(m)
- o e) Lowest elevation of machinery and/or equipment servicing the building (Describe in a Comments area) ____. __ft.(m)
- o f) Lowest adjacent (finished) grade (LAG) 1136 . 94 ft.(m)
- o g) Highest adjacent (finished) grade (HAG) 1137. 64 ft.(m)
- o h) No. of permanent openings (flood vents) within 1 ft. above adjacent grade _____
- o i) Total area of all permanent openings (flood vents) in C3.h _____sq. in. (sq. cm)

License Number, Embossed Seal, Signature, and Date

Registered Professional Engineer (Civil) CERTIFICATE NO. 12890 JAMES D. LEMON Date Signed 6/16/03 ARIZONA, U.S.A.

SECTION D - SURVEYOR, ENGINEER, OR ARCHITECT CERTIFICATION

This certification is to be signed and sealed by a land surveyor, engineer, or architect authorized by law to certify elevation information.
I certify that the information in Sections A, B, and C on this certificate represents my best efforts to interpret the data available.
I understand that any false statement may be punishable by fine or imprisonment under 18 U.S. Code, Section 1001.

CERTIFIER'S NAME	LICENSE NUMBER	
James D. Lemon, P.E., R.L.S.	# 12890	
TITLE	COMPANY NAME	
President	Landmark Engineering, Inc.	

ADDRESS	CITY	STATE	ZIP CODE
7310 North 16th Street, Suite #285	Phoenix	AZ	85020

SIGNATURE	DATE	TELEPHONE
	6/16/03	602.861.2005

IMPORTANT: In these spaces, copy the corresponding information from Section A.

BUILDING STREET ADDRESS (Including Apt., Unit, Suite, and/or Bldg. No.) OR P.O. ROUTE AND BOX NO.			For Insurance Company Use:
3214 E. Willetta Street			Policy Number
CITY	STATE	ZIP CODE	Company NAIC Number
Phoenix	AZ	85008	

SECTION D - SURVEYOR, ENGINEER, OR ARCHITECT CERTIFICATION (CONTINUED)

Copy both sides of this Elevation Certificate for (1) community official, (2) insurance agent/company, and (3) building owner.

COMMENTS

☒ Check here if attachments

SECTION E - BUILDING ELEVATION INFORMATION (SURVEY NOT REQUIRED) FOR ZONE AO AND ZONE A (WITHOUT BFE)

For Zone AO and Zone A (without BFE), complete Items E1 through E4. If the Elevation Certificate is intended for use as supporting information for a LOMA or LOMR-F, Section C must be completed.

E1. Building Diagram Number _(Select the building diagram most similar to the building for which this certificate is being completed – see pages 6 and 7. If no diagram accurately represents the building, provide a sketch or photograph.)

E2. The top of the bottom floor (including basement or enclosure) of the building is __ ft.(m) __in.(cm) ☐ above or ☐ below (check one) the highest adjacent grade. (Use natural grade, if available).

E3. For Building Diagrams 6-8 with openings (see page 7), the next higher floor or elevated floor (elevation b) of the building is __ ft.(m) __in.(cm) above the highest adjacent grade. Complete items C3.h and C3.i on front of form.

E4. The top of the platform of machinery and/or equipment servicing the building is __ ft.(m) __in.(cm) ☐ above or ☐ below (check one) the highest adjacent grade. (Use natural grade, if available).

E5. For Zone AO only: If no flood depth number is available, is the top of the bottom floor elevated in accordance with the community's floodplain management ordinance?
☐ Yes ☐ No ☐ Unknown. The local official must certify this information in Section G.

SECTION F - PROPERTY OWNER (OR OWNER'S REPRESENTATIVE) CERTIFICATION

The property owner or owner's authorized representative who completes Sections A, B, C (Items C3.h and C3.i only), and E for Zone A (without a FEMA-issued or community-issued BFE) or Zone AO must sign here. *The statements in Sections A, B, C, and E are correct to the best of my knowledge.*

PROPERTY OWNER'S OR OWNER'S AUTHORIZED REPRESENTATIVE'S NAME

ADDRESS | CITY | STATE | ZIP CODE

SIGNATURE | DATE | TELEPHONE

COMMENTS

☐ Check here if attachments

SECTION G - COMMUNITY INFORMATION (OPTIONAL)

The local official who is authorized by law or ordinance to administer the community's floodplain management ordinance can complete Sections A, B, C (or E), and G of this Elevation Certificate. Complete the applicable item(s) and sign below.

G1. ☐ The information in Section C was taken from other documentation that has been signed and embossed by a licensed surveyor, engineer, or architect who is authorized by state or local law to certify elevation information. (Indicate the source and date of the elevation data in the Comments area below.)

G2. ☐ A community official completed Section E for a building located in Zone A (without a FEMA-issued or community-issued BFE) or Zone AO.

G3. ☐ The following information (Items G4-G9) is provided for community floodplain management purposes.

G4. PERMIT NUMBER	G5. DATE PERMIT ISSUED	G6. DATE CERTIFICATE OF COMPLIANCE/OCCUPANCY ISSUED

G7. This permit has been issued for: ☐ New Construction ☐ Substantial Improvement

G8. Elevation of as-built lowest floor (including basement) of the building is: ____. __ft.(m) Datum: ____

G9. BFE or (in Zone AO) depth of flooding at the building site is: ____. __ ft.(m) Datum: ____

LOCAL OFFICIAL'S NAME | TITLE

COMMUNITY NAME | TELEPHONE

SIGNATURE | DATE

COMMENTS

☐ Check here if attachments

LOT NUMBER : 26 (SEE MAP)

DATE : 08-29-02

PLEASE INDICATE APPROX. MEASUREMENT LOCATION

ADDRESS : 3220 EAST WILLETTA STREET PHX AZ 85008

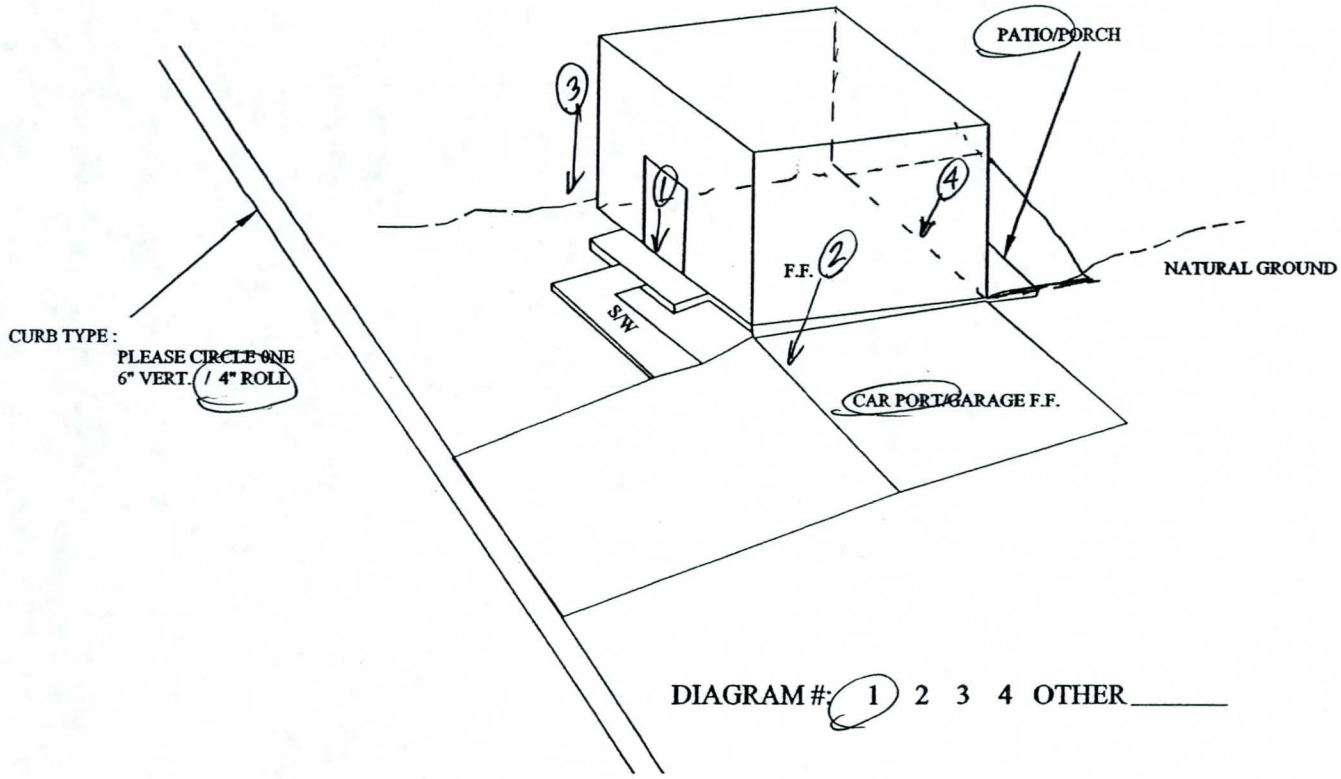

DIAGRAM #: 1 2 3 4 OTHER_____

ELEVATIONS REQUIRED:

1. F.F. RESIDENCE 1138.08
2. F.F. CAR PORT/GARAGE 1137.48
3. L.A.G. 1137.02 (NATURAL GROUND)
4. H.A.G. 1137.96

L.A.G. - LOWEST ADJACENT GRADE (TO F.F.)
H.A.G. - HIGHEST ADJACENT GRADE (TO F.F.)

RELAVENT NOTES FOR ENGINEER : CONCRETE PATIO SLAB LOCATED IMMEDIATELY NEXT TO BUILDING IN BACKYARD.

LANDMARK ENGINEERING, INC.
7310 N. 16TH STREET SUITE 285
PHOENIX, ARIZONA 85020 (602) 861-2005

COP ELEVATION CERT

LOT : 26

FIGURE

LOT NUMBER : 27 (SEE MAP)

DATE : 08-29-02

PLEASE INDICATE APPROX. MEASUREMENT LOCATION

ADDRESS : 3214 EAST WILLETTA STREET PHX AZ 85008

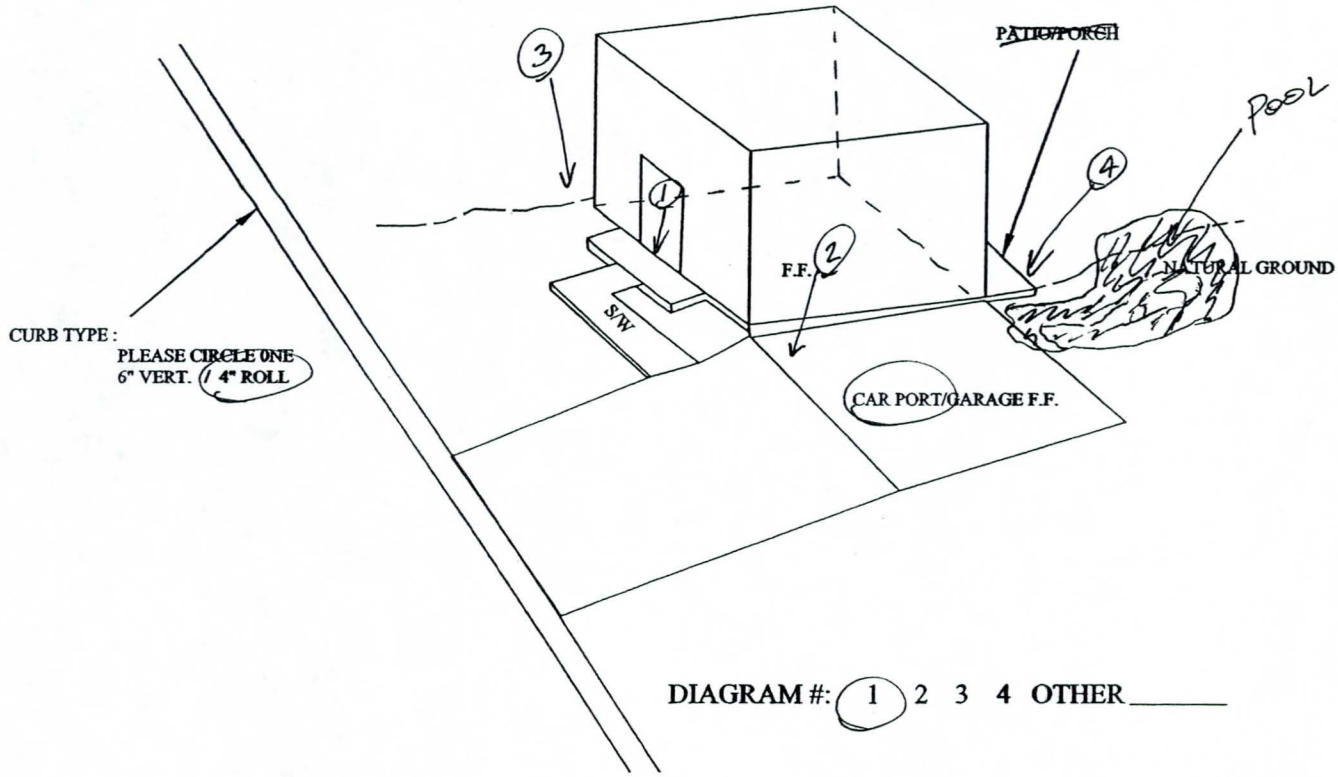

DIAGRAM #: (1) 2 3 4 OTHER _____

ELEVATIONS REQUIRED:

(1) F.F. RESIDENCE	1137.92
(2) F.F. CAR PORT/GARAGE	1137.27
(3) L.A.G.	1136.94 (NATURAL GROUND)
(4) H.A.G.	1137.64

L.A.G. - LOWEST ADJACENT GRADE (TO F.F.)
H.A.G. - HIGHEST ADJACENT GRADE (TO F.F.)

RELAVENT NOTES FOR ENGINEER : * POOL LOCATED ON NE CORNER OF BUILDING
* ALLEY WAY BOUNDS LOT ON WESTSIDE OF RESIDENCE

LANDMARK ENGINEERING, INC.
7310 N. 16TH STREET SUITE 285
PHOENIX, ARIZONA 85020 (602) 861-2005

COP ELEVATION CERT

LOT : 27

FIGURE

FEDERAL EMERGENCY MANAGEMENT AGENCY
NATIONAL FLOOD INSURANCE PROGRAM

ELEVATION CERTIFICATE

O.M.B. No. 3067-0077
Expires December 31, 2005

Important: Read the instructions on pages 1 - 7.

SECTION A - PROPERTY OWNER INFORMATION

For Insurance Company Use:
Policy Number
Company NAIC Number

BUILDING OWNER'S NAME
Vasquez, Elmer Head

BUILDING STREET ADDRESS (Including Apt., Unit, Suite, and/or Bldg. No.) OR P.O. ROUTE AND BOX NO.
3219 E. Willetta Street

CITY	STATE	ZIP CODE
Phoenix	AZ	85008

PROPERTY DESCRIPTION (Lot and Block Numbers, Tax Parcel Number, Legal Description, etc.)
Lot #28 Parcel #121-07-106

BUILDING USE (e.g., Residential, Non-residential, Addition, Accessory, etc. Use a Comments area, if necessary.)
Residential

LATITUDE/LONGITUDE (OPTIONAL) (##° - ##' - ##.##" or ##.#####°)
HORIZONTAL DATUM: ☒ NAD 1927 ☐ NAD 1983
SOURCE: ☒ GPS (Type):____ ☐ USGS Quad Map ☐ Other: ____

SECTION B - FLOOD INSURANCE RATE MAP (FIRM) INFORMATION

B1. NFIP COMMUNITY NAME & COMMUNITY NUMBER	B2. COUNTY NAME	B3. STATE
Phoenix, City of Community Number 040051	Maricopa County	AZ

B4. MAP AND PANEL NUMBER	B5. SUFFIX	B6. FIRM INDEX DATE	B7. FIRM PANEL EFFECTIVE/REVISED DATE	B8. FLOOD ZONE(S)	B9. BASE FLOOD ELEVATION(S) (Zone AO, use depth of flooding)
04013C2135	E	09/30/95	07/19/01	A	1138.62

B10. Indicate the source of the Base Flood Elevation (BFE) data or base flood depth entered in B9.
☐ FIS Profile ☐ FIRM ☐ Community Determined ☒ Other (Describe): Canal Bank

B11. Indicate the elevation datum used for the BFE in B9: ☒ NGVD 1929 ☐ NAVD 1988 ☐ Other (Describe): ____

B12. Is the building located in a Coastal Barrier Resources System (CBRS) area or Otherwise Protected Area (OPA)? ☐ Yes ☒ No Designation Date____

SECTION C - BUILDING ELEVATION INFORMATION (SURVEY REQUIRED)

C1. Building elevations are based on: ☐ Construction Drawings* ☐ Building Under Construction* ☒ Finished Construction
*A new Elevation Certificate will be required when construction of the building is complete.

C2. Building Diagram Number 1 (Select the building diagram most similar to the building for which this certificate is being completed - see pages 6 and 7. If no diagram accurately represents the building, provide a sketch or photograph.)

C3. Elevations – Zones A1-A30, AE, AH, A (with BFE), VE, V1-V30, V (with BFE), AR, AR/A, AR/AE, AR/A1-A30, AR/AH, AR/AO
Complete Items C3.-a-i below according to the building diagram specified in Item C2. State the datum used. If the datum is different from the datum used for the BFE in Section B, convert the datum to that used for the BFE. Show field measurements and datum conversion calculation. Use the space provided or the Comments area of Section D or Section G, as appropriate, to document the datum conversion.
Datum NGVD Conversion/Comments Benchmark: Brass cap in hand hole; elevation =1138.77 ft. @ centerline intersection o f 32nd Street & McDowell Road
Elevation reference mark used C.O. Phoenix Does the elevation reference mark used appear on the FIRM? ☐ Yes ☒ No

- o a) Top of bottom floor (including basement or enclosure) 1136. 18 ft.(m)
- o b) Top of next higher floor ____. __ft.(m)
- o c) Bottom of lowest horizontal structural member (V zones only) ____. __ft.(m)
- o d) Attached garage (top of slab) 1136. 70 ft.(m)
- o e) Lowest elevation of machinery and/or equipment servicing the building (Describe in a Comments area) ____. __ft.(m)
- o f) Lowest adjacent (finished) grade (LAG) 1135. 91 ft.(m)
- o g) Highest adjacent (finished) grade (HAG) 1136. 24 ft.(m)
- o h) No. of permanent openings (flood vents) within 1 ft. above adjacent grade _____
- o i) Total area of all permanent openings (flood vents) in C3.h _____sq. in. (sq. cm)

License Number, Embossed Seal, Signature, and Date

Registered Professional Engineer (Civil) CERTIFICATE NO. 12890 JAMES D. LEMON Date Signed 6/16/03 ARIZONA, U.S.A.

SECTION D - SURVEYOR, ENGINEER, OR ARCHITECT CERTIFICATION

This certification is to be signed and sealed by a land surveyor, engineer, or architect authorized by law to certify elevation information.
I certify that the information in Sections A, B, and C on this certificate represents my best efforts to interpret the data available.
I understand that any false statement may be punishable by fine or imprisonment under 18 U.S. Code, Section 1001.

CERTIFIER'S NAME	LICENSE NUMBER		
James D. Lemon, P.E., R.L.S.	# 12890		
TITLE	COMPANY NAME		
President	Landmark Engineering, Inc.		
ADDRESS	CITY	STATE	ZIP CODE
7310 North 16th Street, Suite #285	Phoenix	AZ	85020
SIGNATURE	DATE	TELEPHONE	
	6/16/03	602.861.2005	

IMPORTANT: In these spaces, copy the corresponding information from Section A.

BUILDING STREET ADDRESS (Including Apt., Unit, Suite, and/or Bldg. No.) OR P.O. ROUTE AND BOX NO.			For Insurance Company Use:
3219 E. Willetta Street			Policy Number
CITY	STATE	ZIP CODE	Company NAIC Number
Phoenix	AZ	85008	

SECTION D - SURVEYOR, ENGINEER, OR ARCHITECT CERTIFICATION (CONTINUED)

Copy both sides of this Elevation Certificate for (1) community official, (2) insurance agent/company, and (3) building owner.

COMMENTS

☒ Check here if attachments

SECTION E - BUILDING ELEVATION INFORMATION (SURVEY NOT REQUIRED) FOR ZONE AO AND ZONE A (WITHOUT BFE)

For Zone AO and Zone A (without BFE), complete Items E1 through E4. If the Elevation Certificate is intended for use as supporting information for a LOMA or LOMR-F, Section C must be completed.

E1. Building Diagram Number _(Select the building diagram most similar to the building for which this certificate is being completed – see pages 6 and 7. If no diagram accurately represents the building, provide a sketch or photograph.)

E2. The top of the bottom floor (including basement or enclosure) of the building is __ ft.(m) __in.(cm) ☐ above or ☐ below (check one) the highest adjacent grade. (Use natural grade, if available).

E3. For Building Diagrams 6-8 with openings (see page 7), the next higher floor or elevated floor (elevation b) of the building is __ ft.(m) __in.(cm) above the highest adjacent grade. Complete items C3.h and C3.i on front of form.

E4. The top of the platform of machinery and/or equipment servicing the building is __ ft.(m) __in.(cm) ☐ above or ☐ below (check one) the highest adjacent grade. (Use natural grade, if available).

E5. For Zone AO only: If no flood depth number is available, is the top of the bottom floor elevated in accordance with the community's floodplain management ordinance?
☐ Yes ☐ No ☐ Unknown. The local official must certify this information in Section G.

SECTION F - PROPERTY OWNER (OR OWNER'S REPRESENTATIVE) CERTIFICATION

The property owner or owner's authorized representative who completes Sections A, B, C (Items C3.h and C3.i only), and E for Zone A (without a FEMA-issued or community-issued BFE) or Zone AO must sign here. *The statements in Sections A, B, C, and E are correct to the best of my knowledge.*

PROPERTY OWNER'S OR OWNER'S AUTHORIZED REPRESENTATIVE'S NAME

ADDRESS | CITY | STATE | ZIP CODE

SIGNATURE | DATE | TELEPHONE

COMMENTS

☐ Check here if attachments

SECTION G - COMMUNITY INFORMATION (OPTIONAL)

The local official who is authorized by law or ordinance to administer the community's floodplain management ordinance can complete Sections A, B, C (or E), and G of this Elevation Certificate. Complete the applicable item(s) and sign below.

G1. ☐ The information in Section C was taken from other documentation that has been signed and embossed by a licensed surveyor, engineer, or architect who is authorized by state or local law to certify elevation information. (Indicate the source and date of the elevation data in the Comments area below.)

G2. ☐ A community official completed Section E for a building located in Zone A (without a FEMA-issued or community-issued BFE) or Zone AO.

G3. ☐ The following information (Items G4-G9) is provided for community floodplain management purposes.

G4. PERMIT NUMBER	G5. DATE PERMIT ISSUED	G6. DATE CERTIFICATE OF COMPLIANCE/OCCUPANCY ISSUED

G7. This permit has been issued for: ☐ New Construction ☐ Substantial Improvement

G8. Elevation of as-built lowest floor (including basement) of the building is: ____. __ft.(m) Datum: _____

G9. BFE or (in Zone AO) depth of flooding at the building site is: ____. __ ft.(m) Datum: _____

LOCAL OFFICIAL'S NAME | TITLE

COMMUNITY NAME | TELEPHONE

SIGNATURE | DATE

COMMENTS

☐ Check here if attachments

LOT NUMBER : 28 (SEE MAP)

DATE : 08-29-02

PLEASE INDICATE APPROX. MEASUREMENT LOCATION

ADDRESS : 3219 E. WILLETTA STREET PHX AZ 85008

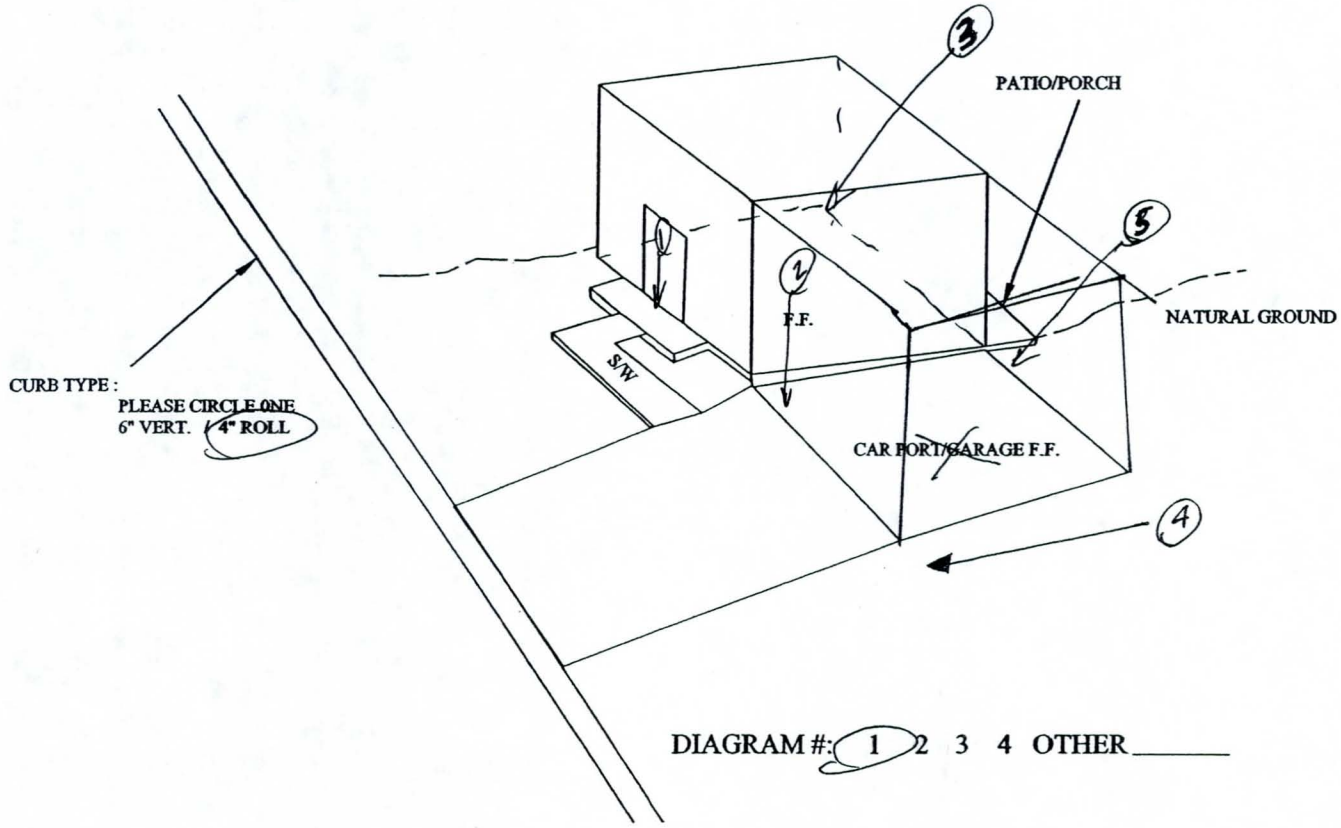

DIAGRAM #: 1 2 3 4 OTHER _____

ELEVATIONS REQUIRED:

① F.F. RESIDENCE	1136.18
② F.F. CAR PORT/GARAGE	1136.70
③ L.A.G.	1135.91
④ H.A.G.	1136.24 (CONC.)

L.A.G. - LOWEST ADJACENT GRADE (TO F.F.)
H.A.G. - HIGHEST ADJACENT GRADE (TO F.F.)

⑤ 1136.17

* ADDING ONTO HOUSE TO SOUTH. BUILDING PERMIT APPROVED BY CITY OF PHOENIX.

RELAVENT NOTES FOR ENGINEER : *NO CARPORT/GARAGE ON LOT – CONCRETE PAD LOCATED IN FRONT OF HOUSE

LANDMARK ENGINEERING, INC.
7310 N. 16TH STREET SUITE 285
PHOENIX, ARIZONA 85020 (602) 861-2005

COP ELEVATION CERT

LOT : 28

FIGURE

FEDERAL EMERGENCY MANAGEMENT AGENCY
NATIONAL FLOOD INSURANCE PROGRAM

ELEVATION CERTIFICATE

O.M.B. No. 3067-0077
Expires December 31, 2005

Important: Read the instructions on pages 1 - 7.

SECTION A - PROPERTY OWNER INFORMATION

For Insurance Company Use:
Policy Number
Company NAIC Number

BUILDING OWNER'S NAME
Duran, Blanca

BUILDING STREET ADDRESS (Including Apt., Unit, Suite, and/or Bldg. No.) OR P.O. ROUTE AND BOX NO.
3225 E. Willetta Street

CITY	STATE	ZIP CODE
Phoenix	AZ	85008

PROPERTY DESCRIPTION (Lot and Block Numbers, Tax Parcel Number, Legal Description, etc.)
Lot #29 Parcel #121-07-107

BUILDING USE (e.g., Residential, Non-residential, Addition, Accessory, etc. Use a Comments area, if necessary.)
Residential

LATITUDE/LONGITUDE (OPTIONAL) (##° - ##' - ##.##" or ##.#####°)

HORIZONTAL DATUM: ☒ NAD 1927 ☐ NAD 1983

SOURCE: ☒ GPS (Type):____ ☐ USGS Quad Map ☐ Other: ____

SECTION B - FLOOD INSURANCE RATE MAP (FIRM) INFORMATION

B1. NFIP COMMUNITY NAME & COMMUNITY NUMBER	B2. COUNTY NAME	B3. STATE
Phoenix, City of Community Number 040051	Maricopa County	AZ

B4. MAP AND PANEL NUMBER	B5. SUFFIX	B6. FIRM INDEX DATE	B7. FIRM PANEL EFFECTIVE/REVISED DATE	B8. FLOOD ZONE(S)	B9. BASE FLOOD ELEVATION(S) (Zone AO, use depth of flooding)
04013C2135	E	09/30/95	07/19/01	A	1138.62

B10. Indicate the source of the Base Flood Elevation (BFE) data or base flood depth entered in B9.
☐ FIS Profile ☐ FIRM ☐ Community Determined ☒ Other (Describe): Canal Bank

B11. Indicate the elevation datum used for the BFE in B9: ☒ NGVD 1929 ☐ NAVD 1988 ☐ Other (Describe): ____

B12. Is the building located in a Coastal Barrier Resources System (CBRS) area or Otherwise Protected Area (OPA)? ☐ Yes ☒ No Designation Date____

SECTION C - BUILDING ELEVATION INFORMATION (SURVEY REQUIRED)

C1. Building elevations are based on: ☐ Construction Drawings* ☐ Building Under Construction* ☒ Finished Construction
*A new Elevation Certificate will be required when construction of the building is complete.

C2. Building Diagram Number 1 (Select the building diagram most similar to the building for which this certificate is being completed - see pages 6 and 7. If no diagram accurately represents the building, provide a sketch or photograph.)

C3. Elevations – Zones A1-A30, AE, AH, A (with BFE), VE, V1-V30, V (with BFE), AR, AR/A, AR/AE, AR/A1-A30, AR/AH, AR/AO
Complete Items C3.-a-i below according to the building diagram specified in Item C2. State the datum used. If the datum is different from the datum used for the BFE in Section B, convert the datum to that used for the BFE. Show field measurements and datum conversion calculation. Use the space provided or the Comments area of Section D or Section G, as appropriate, to document the datum conversion.
Datum NGVD Conversion/Comments Benchmark: Brass cap in hand hole; elevation =1138.77 ft. @ centerline intersection o f 32nd Street & McDowell Road
Elevation reference mark used C.O. Phoenix Does the elevation reference mark used appear on the FIRM? ☐ Yes ☒ No

- o a) Top of bottom floor (including basement or enclosure) 1136. .85 ft.(m)
- o b) Top of next higher floor ____. __ft.(m)
- o c) Bottom of lowest horizontal structural member (V zones only) ____. __ft.(m)
- o d) Attached garage (top of slab) 1136. .53 ft.(m)
- o e) Lowest elevation of machinery and/or equipment servicing the building (Describe in a Comments area) ____. __ft.(m)
- o f) Lowest adjacent (finished) grade (LAG) N/A . __ft.(m)
- o g) Highest adjacent (finished) grade (HAG) N/A . __ft.(m)
- o h) No. of permanent openings (flood vents) within 1 ft. above adjacent grade _____
- o i) Total area of all permanent openings (flood vents) in C3.h _____sq. in. (sq. cm)

License Number, Embossed Seal, Signature, and Date

Registered Professional Engineer (Civil) CERTIFICATE NO. 12890 JAMES D. LEMON Date Signed 6/16/03 ARIZONA, U.S.A.

SECTION D - SURVEYOR, ENGINEER, OR ARCHITECT CERTIFICATION

This certification is to be signed and sealed by a land surveyor, engineer, or architect authorized by law to certify elevation information.
I certify that the information in Sections A, B, and C on this certificate represents my best efforts to interpret the data available.
I understand that any false statement may be punishable by fine or imprisonment under 18 U.S. Code, Section 1001.

CERTIFIER'S NAME	LICENSE NUMBER		
James D. Lemon, P.E., R.L.S.	# 12890		
TITLE	COMPANY NAME		
President	Landmark Engineering, Inc.		
ADDRESS	CITY	STATE	ZIP CODE
7310 North 16th Street, Suite #285	Phoenix	AZ	85020
SIGNATURE	DATE	TELEPHONE	
	6/16/03	602.861.2005	

IMPORTANT: In these spaces, copy the corresponding information from Section A.			For Insurance Company Use:
BUILDING STREET ADDRESS (Including Apt., Unit, Suite, and/or Bldg. No.) OR P.O. ROUTE AND BOX NO. 3225 E. Willetta Street			Policy Number
CITY Phoenix	STATE AZ	ZIP CODE 85008	Company NAIC Number

SECTION D - SURVEYOR, ENGINEER, OR ARCHITECT CERTIFICATION (CONTINUED)

Copy both sides of this Elevation Certificate for (1) community official, (2) insurance agent/company, and (3) building owner.

COMMENTS
Homeowner was not home at time of survey.

☒ Check here if attachments

SECTION E - BUILDING ELEVATION INFORMATION (SURVEY NOT REQUIRED) FOR ZONE AO AND ZONE A (WITHOUT BFE)

For Zone AO and Zone A (without BFE), complete Items E1 through E4. If the Elevation Certificate is intended for use as supporting information for a LOMA or LOMR-F, Section C must be completed.

E1. Building Diagram Number _(Select the building diagram most similar to the building for which this certificate is being completed – see pages 6 and 7. If no diagram accurately represents the building, provide a sketch or photograph.)

E2. The top of the bottom floor (including basement or enclosure) of the building is __ ft.(m) __in.(cm) ☐ above or ☐ below (check one) the highest adjacent grade. (Use natural grade, if available).

E3. For Building Diagrams 6-8 with openings (see page 7), the next higher floor or elevated floor (elevation b) of the building is __ ft.(m) __in.(cm) above the highest adjacent grade. Complete items C3.h and C3.i on front of form.

E4. The top of the platform of machinery and/or equipment servicing the building is __ ft.(m) __in.(cm) ☐ above or ☐ below (check one) the highest adjacent grade. (Use natural grade, if available).

E5. For Zone AO only: If no flood depth number is available, is the top of the bottom floor elevated in accordance with the community's floodplain management ordinance?
☐ Yes ☐ No ☐ Unknown. The local official must certify this information in Section G.

SECTION F - PROPERTY OWNER (OR OWNER'S REPRESENTATIVE) CERTIFICATION

The property owner or owner's authorized representative who completes Sections A, B, C (Items C3.h and C3.i only), and E for Zone A (without a FEMA-issued or community-issued BFE) or Zone AO must sign here. *The statements in Sections A, B, C, and E are correct to the best of my knowledge.*

PROPERTY OWNER'S OR OWNER'S AUTHORIZED REPRESENTATIVE'S NAME

ADDRESS | CITY | STATE | ZIP CODE

SIGNATURE | DATE | TELEPHONE

COMMENTS

☐ Check here if attachments

SECTION G - COMMUNITY INFORMATION (OPTIONAL)

The local official who is authorized by law or ordinance to administer the community's floodplain management ordinance can complete Sections A, B, C (or E), and G of this Elevation Certificate. Complete the applicable item(s) and sign below.

G1. ☐ The information in Section C was taken from other documentation that has been signed and embossed by a licensed surveyor, engineer, or architect who is authorized by state or local law to certify elevation information. (Indicate the source and date of the elevation data in the Comments area below.)

G2. ☐ A community official completed Section E for a building located in Zone A (without a FEMA-issued or community-issued BFE) or Zone AO.

G3. ☐ The following information (Items G4-G9) is provided for community floodplain management purposes.

G4. PERMIT NUMBER	G5. DATE PERMIT ISSUED	G6. DATE CERTIFICATE OF COMPLIANCE/OCCUPANCY ISSUED

G7. This permit has been issued for: ☐ New Construction ☐ Substantial Improvement

G8. Elevation of as-built lowest floor (including basement) of the building is: ____. __ft.(m) Datum: ____

G9. BFE or (in Zone AO) depth of flooding at the building site is: ____. __ft.(m) Datum: ____

LOCAL OFFICIAL'S NAME | TITLE

COMMUNITY NAME | TELEPHONE

SIGNATURE | DATE

COMMENTS

☐ Check here if attachments

LOT NUMBER : 29 (SEE MAP)

DATE : 08-29-02

PLEASE INDICATE APPROX. MEASUREMENT LOCATION

ADDRESS : 3225 EAST WILLETTA STREET PHX AZ 85008

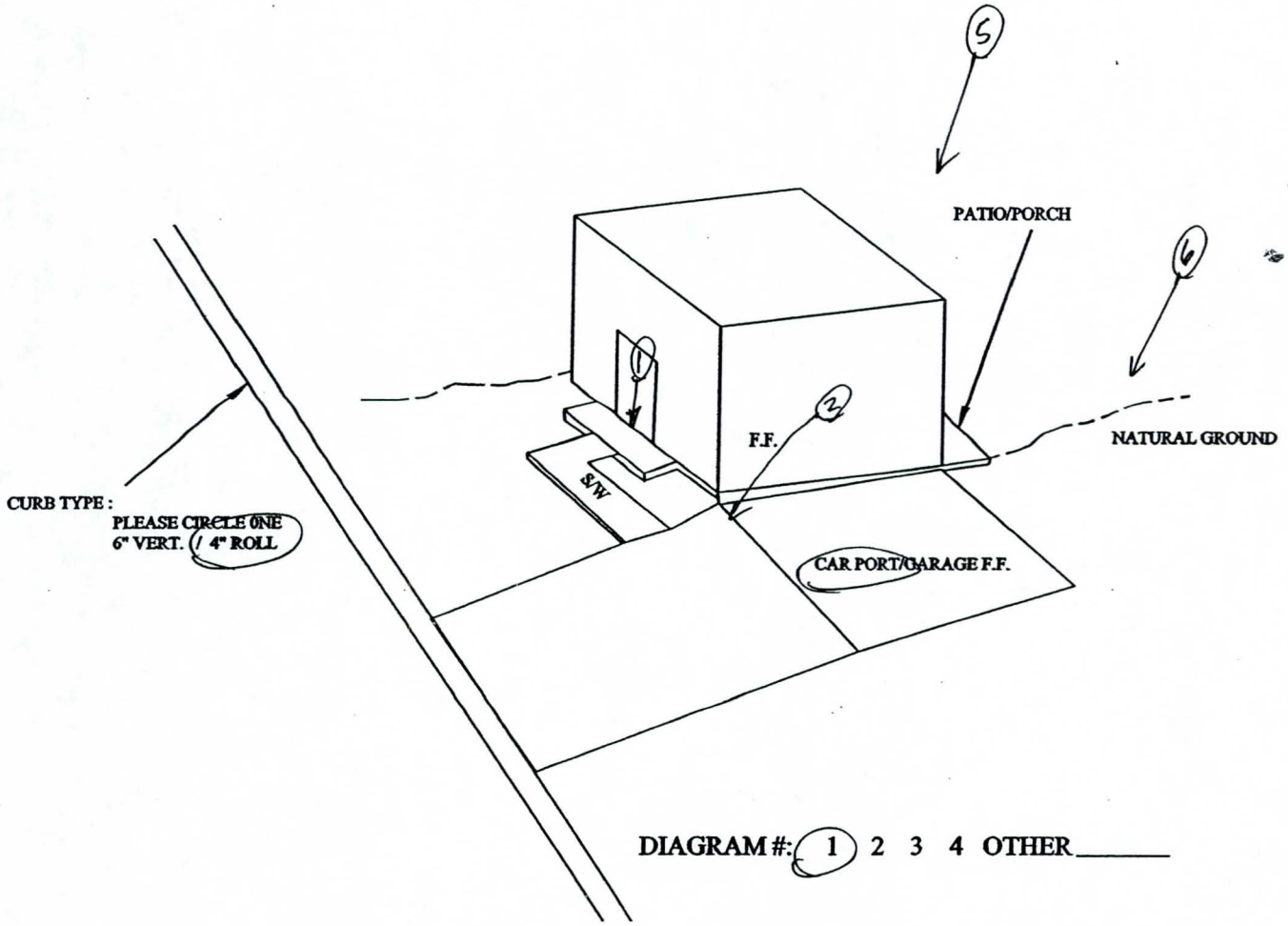

DIAGRAM #: 1 2 3 4 OTHER_____

ELEVATIONS REQUIRED:

1 F.F. RESIDENCE	1136.85	5	1136.69
2 F.F. CAR PORT/GARAGE	1136.53	6	1136.88
3 L.A.G.	N/A		
4 H.A.G.	N/A		

L.A.G. - LOWEST ADJACENT GRADE (TO F.F.)
H.A.G. - HIGHEST ADJACENT GRADE (TO F.F.)

RELAVENT NOTES FOR ENGINEER : * HOMEOWNER WAS NOT HOME TO ALLOW ACCESS TO REAR YARD * LOT CORNER POINTS TAKEN FROM SOUTH ALLEY WAY.

LANDMARK ENGINEERING, INC.
7310 N. 16TH STREET SUITE 285
PHOENIX, ARIZONA 85020 (602) 861-2005

COP ELEVATION CERT

LOT : 29

FIGURE

FEDERAL EMERGENCY MANAGEMENT AGENCY
NATIONAL FLOOD INSURANCE PROGRAM

ELEVATION CERTIFICATE

O.M.B. No. 3067-0077
Expires December 31, 2005

Important: Read the instructions on pages 1 - 7.

SECTION A - PROPERTY OWNER INFORMATION

For Insurance Company Use:
Policy Number
Company NAIC Number

BUILDING OWNER'S NAME
Villalobos, Heminia

BUILDING STREET ADDRESS (Including Apt., Unit, Suite, and/or Bldg. No.) OR P.O. ROUTE AND BOX NO.
3229 E. Willetta Street

CITY	STATE	ZIP CODE
Phoenix	AZ	85008

PROPERTY DESCRIPTION (Lot and Block Numbers, Tax Parcel Number, Legal Description, etc.)
Lot #30 Parcel #121-07-108

BUILDING USE (e.g., Residential, Non-residential, Addition, Accessory, etc. Use a Comments area, if necessary.)
Residential

LATITUDE/LONGITUDE (OPTIONAL) (##° - ## - ##.##" or ##.#####°)
HORIZONTAL DATUM: ☒ NAD 1927 ☐ NAD 1983
SOURCE: ☒ GPS (Type):_____ ☐ USGS Quad Map ☐ Other: _____

SECTION B - FLOOD INSURANCE RATE MAP (FIRM) INFORMATION

B1. NFIP COMMUNITY NAME & COMMUNITY NUMBER	B2. COUNTY NAME	B3. STATE
Phoenix, City of Community Number 040051	Maricopa County	AZ

B4. MAP AND PANEL NUMBER	B5. SUFFIX	B6. FIRM INDEX DATE	B7. FIRM PANEL EFFECTIVE/REVISED DATE	B8. FLOOD ZONE(S)	B9. BASE FLOOD ELEVATION(S) (Zone AO, use depth of flooding)
04013C2135	E	09/30/95	07/19/01	A	1138.18

B10. Indicate the source of the Base Flood Elevation (BFE) data or base flood depth entered in B9.
☐ FIS Profile ☐ FIRM ☐ Community Determined ☒ Other (Describe): Canal Bank
B11. Indicate the elevation datum used for the BFE in B9: ☒ NGVD 1929 ☐ NAVD 1988 ☐ Other (Describe): _____
B12. Is the building located in a Coastal Barrier Resources System (CBRS) area or Otherwise Protected Area (OPA)? ☐ Yes ☒ No Designation Date_____

SECTION C - BUILDING ELEVATION INFORMATION (SURVEY REQUIRED)

C1. Building elevations are based on: ☐ Construction Drawings* ☐ Building Under Construction* ☒ Finished Construction
*A new Elevation Certificate will be required when construction of the building is complete.

C2. Building Diagram Number 1 (Select the building diagram most similar to the building for which this certificate is being completed - see pages 6 and 7. If no diagram accurately represents the building, provide a sketch or photograph.)

C3. Elevations – Zones A1-A30, AE, AH, A (with BFE), VE, V1-V30, V (with BFE), AR, AR/A, AR/AE, AR/A1-A30, AR/AH, AR/AO
Complete Items C3.-a-i below according to the building diagram specified in Item C2. State the datum used. If the datum is different from the datum used for the BFE in Section B, convert the datum to that used for the BFE. Show field measurements and datum conversion calculation. Use the space provided or the Comments area of Section D or Section G, as appropriate, to document the datum conversion.
Datum NGVD Conversion/Comments Benchmark: Brass cap in hand hole; elevation =1138.77 ft. @ centerline intersection o f 32nd Street & McDowell Road
Elevation reference mark used C.O. Phoenix Does the elevation reference mark used appear on the FIRM? ☐ Yes ☒ No

- o a) Top of bottom floor (including basement or enclosure) 1136. 88 ft.(m)
- o b) Top of next higher floor ____. __ft.(m)
- o c) Bottom of lowest horizontal structural member (V zones only) ____. __ft.(m)
- o d) Attached garage (top of slab) 1136. .65 ft.(m)
- o e) Lowest elevation of machinery and/or equipment servicing the building (Describe in a Comments area) ____. __ft.(m)
- o f) Lowest adjacent (finished) grade (LAG) 1136 . 25 ft.(m)
- o g) Highest adjacent (finished) grade (HAG) 1137. 15 ft.(m)
- o h) No. of permanent openings (flood vents) within 1 ft. above adjacent grade _____
- o i) Total area of all permanent openings (flood vents) in C3.h _____sq. in. (sq. cm)

License Number, Embossed Seal, Signature, and Date

Registered Professional Engineer (Civil)
CERTIFICATE NO.
12890
JAMES D.
LEMON
Date Signed 6/16/03
ARIZONA, U.S.A.

SECTION D - SURVEYOR, ENGINEER, OR ARCHITECT CERTIFICATION

This certification is to be signed and sealed by a land surveyor, engineer, or architect authorized by law to certify elevation information.
I certify that the information in Sections A, B, and C on this certificate represents my best efforts to interpret the data available.
I understand that any false statement may be punishable by fine or imprisonment under 18 U.S. Code, Section 1001.

CERTIFIER'S NAME	LICENSE NUMBER
James D. Lemon, P.E., R.L.S.	# 12890

TITLE	COMPANY NAME
President	Landmark Engineering, Inc.

ADDRESS	CITY	STATE	ZIP CODE
7310 North 16th Street, Suite #285	Phoenix	AZ	85020

SIGNATURE	DATE	TELEPHONE
	6/16/03	602.861.2005

IMPORTANT: In these spaces, copy the corresponding information from Section A.

BUILDING STREET ADDRESS (Including Apt., Unit, Suite, and/or Bldg. No.) OR P.O. ROUTE AND BOX NO.			For Insurance Company Use:
3229 E. Willetta Street			Policy Number
CITY	STATE	ZIP CODE	Company NAIC Number
Phoenix	AZ	85008	

SECTION D - SURVEYOR, ENGINEER, OR ARCHITECT CERTIFICATION (CONTINUED)

Copy both sides of this Elevation Certificate for (1) community official, (2) insurance agent/company, and (3) building owner.

COMMENTS

☒ Check here if attachments

SECTION E - BUILDING ELEVATION INFORMATION (SURVEY NOT REQUIRED) FOR ZONE AO AND ZONE A (WITHOUT BFE)

For Zone AO and Zone A (without BFE), complete Items E1 through E4. If the Elevation Certificate is intended for use as supporting information for a LOMA or LOMR-F, Section C must be completed.

E1. Building Diagram Number _(Select the building diagram most similar to the building for which this certificate is being completed – see pages 6 and 7. If no diagram accurately represents the building, provide a sketch or photograph.)

E2. The top of the bottom floor (including basement or enclosure) of the building is __ ft.(m) __in.(cm) ☐ above or ☐ below (check one) the highest adjacent grade. (Use natural grade, if available).

E3. For Building Diagrams 6-8 with openings (see page 7), the next higher floor or elevated floor (elevation b) of the building is __ ft.(m) __in.(cm) above the highest adjacent grade. Complete items C3.h and C3.i on front of form.

E4. The top of the platform of machinery and/or equipment servicing the building is __ ft.(m) __in.(cm) ☐ above or ☐ below (check one) the highest adjacent grade. (Use natural grade, if available).

E5. For Zone AO only: If no flood depth number is available, is the top of the bottom floor elevated in accordance with the community's floodplain management ordinance?
☐ Yes ☐ No ☐ Unknown. The local official must certify this information in Section G.

SECTION F - PROPERTY OWNER (OR OWNER'S REPRESENTATIVE) CERTIFICATION

The property owner or owner's authorized representative who completes Sections A, B, C (Items C3.h and C3.i only), and E for Zone A (without a FEMA-issued or community-issued BFE) or Zone AO must sign here. *The statements in Sections A, B, C, and E are correct to the best of my knowledge.*

PROPERTY OWNER'S OR OWNER'S AUTHORIZED REPRESENTATIVE'S NAME

ADDRESS | CITY | STATE | ZIP CODE

SIGNATURE | DATE | TELEPHONE

COMMENTS

☐ Check here if attachments

SECTION G - COMMUNITY INFORMATION (OPTIONAL)

The local official who is authorized by law or ordinance to administer the community's floodplain management ordinance can complete Sections A, B, C (or E), and G of this Elevation Certificate. Complete the applicable item(s) and sign below.

G1. ☐ The information in Section C was taken from other documentation that has been signed and embossed by a licensed surveyor, engineer, or architect who is authorized by state or local law to certify elevation information. (Indicate the source and date of the elevation data in the Comments area below.)

G2. ☐ A community official completed Section E for a building located in Zone A (without a FEMA-issued or community-issued BFE) or Zone AO.

G3. ☐ The following information (Items G4-G9) is provided for community floodplain management purposes.

G4. PERMIT NUMBER	G5. DATE PERMIT ISSUED	G6. DATE CERTIFICATE OF COMPLIANCE/OCCUPANCY ISSUED

G7. This permit has been issued for: ☐ New Construction ☐ Substantial Improvement

G8. Elevation of as-built lowest floor (including basement) of the building is: ____. __ft.(m) Datum: _____

G9. BFE or (in Zone AO) depth of flooding at the building site is: ____. __ ft.(m) Datum: _____

LOCAL OFFICIAL'S NAME | TITLE

COMMUNITY NAME | TELEPHONE

SIGNATURE | DATE

COMMENTS

☐ Check here if attachments

LOT NUMBER : 30 (SEE MAP)

DATE : 08-29-02

PLEASE INDICATE APPROX. MEASUREMENT LOCATION

ADDRESS : 3229 EAST WILLETTA STREET PHX AZ 85008

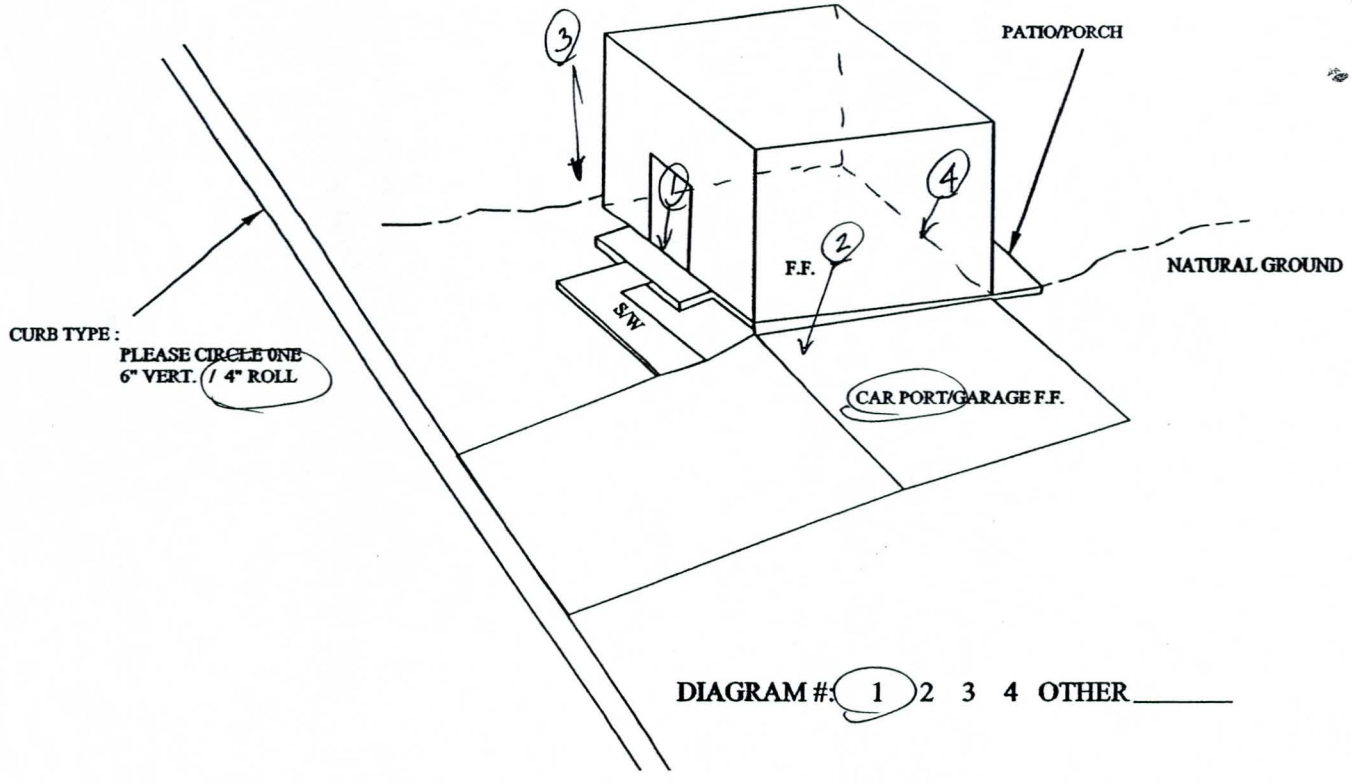

DIAGRAM #: 1 2 3 4 OTHER _____

ELEVATIONS REQUIRED:

1 F.F. RESIDENCE	1136.88
2 F.F. CAR PORT/GARAGE	1136.65
3 L.A.G.	1136.25 (NATURAL GROUND)
4 H.A.G.	1137.15

L.A.G. - LOWEST ADJACENT GRADE (TO F.F.)
H.A.G. - HIGHEST ADJACENT GRADE (TO F.F.)

RELAVENT NOTES FOR ENGINEER : _____

LANDMARK ENGINEERING, INC.
7310 N. 16TH STREET SUITE 285
PHOENIX, ARIZONA 85020 (602) 861-2005

COP ELEVATION CERT

LOT : 30

FIGURE

FEDERAL EMERGENCY MANAGEMENT AGENCY
NATIONAL FLOOD INSURANCE PROGRAM

ELEVATION CERTIFICATE

O.M.B. No. 3067-0077
Expires December 31, 2005

Important: Read the instructions on pages 1 - 7.

SECTION A - PROPERTY OWNER INFORMATION

For Insurance Company Use:
Policy Number
Company NAIC Number

BUILDING OWNER'S NAME
Shade, Vicki A.

BUILDING STREET ADDRESS (Including Apt., Unit, Suite, and/or Bldg. No.) OR P.O. ROUTE AND BOX NO.
1245 N. Oakleaf Drive

CITY	STATE	ZIP CODE
Phoenix	AZ	85008

PROPERTY DESCRIPTION (Lot and Block Numbers, Tax Parcel Number, Legal Description, etc.)
Lot #36 Parcel #121-07-114

BUILDING USE (e.g., Residential, Non-residential, Addition, Accessory, etc. Use a Comments area, if necessary.)
Residential

LATITUDE/LONGITUDE (OPTIONAL) (##° - ## - ##.##" or ##.#####°)
HORIZONTAL DATUM: ☒ NAD 1927 ☐ NAD 1983
SOURCE: ☒ GPS (Type):_____ ☐ USGS Quad Map ☐ Other: _____

SECTION B - FLOOD INSURANCE RATE MAP (FIRM) INFORMATION

B1. NFIP COMMUNITY NAME & COMMUNITY NUMBER	B2. COUNTY NAME	B3. STATE
Phoenix, City of Community Number 040051	Maricopa County	AZ

B4. MAP AND PANEL NUMBER	B5. SUFFIX	B6. FIRM INDEX DATE	B7. FIRM PANEL EFFECTIVE/REVISED DATE	B8. FLOOD ZONE(S)	B9. BASE FLOOD ELEVATION(S) (Zone AO, use depth of flooding)
04013C2135	E	09/30/95	07/19/01	A	1138.30

B10. Indicate the source of the Base Flood Elevation (BFE) data or base flood depth entered in B9.
☐ FIS Profile ☐ FIRM ☐ Community Determined ☒ Other (Describe): Canal Bank

B11. Indicate the elevation datum used for the BFE in B9: ☒ NGVD 1929 ☐ NAVD 1988 ☐ Other (Describe): _____

B12. Is the building located in a Coastal Barrier Resources System (CBRS) area or Otherwise Protected Area (OPA)? ☐ Yes ☒ No Designation Date_____

SECTION C - BUILDING ELEVATION INFORMATION (SURVEY REQUIRED)

C1. Building elevations are based on: ☐ Construction Drawings* ☐ Building Under Construction* ☒ Finished Construction
*A new Elevation Certificate will be required when construction of the building is complete.

C2. Building Diagram Number 1 (Select the building diagram most similar to the building for which this certificate is being completed - see pages 6 and 7. If no diagram accurately represents the building, provide a sketch or photograph.)

C3. Elevations – Zones A1-A30, AE, AH, A (with BFE), VE, V1-V30, V (with BFE), AR, AR/A, AR/AE, AR/A1-A30, AR/AH, AR/AO
Complete Items C3.-a-i below according to the building diagram specified in Item C2. State the datum used. If the datum is different from the datum used for the BFE in Section B, convert the datum to that used for the BFE. Show field measurements and datum conversion calculation. Use the space provided or the Comments area of Section D or Section G, as appropriate, to document the datum conversion.
Datum NGVD Conversion/Comments Benchmark: Brass cap in hand hole; elevation =1138.77 ft. @ centerline intersection o f 32nd Street & McDowell Road
Elevation reference mark used C.O. Phoenix Does the elevation reference mark used appear on the FIRM? ☐ Yes ☒ No

- o a) Top of bottom floor (including basement or enclosure) 1136. 83 ft.(m)
- o b) Top of next higher floor ____. __ft.(m)
- o c) Bottom of lowest horizontal structural member (V zones only) ____. __ft.(m)
- o d) Attached garage (top of slab) 1136. 54 ft.(m)
- o e) Lowest elevation of machinery and/or equipment servicing the building (Describe in a Comments area) ____. __ft.(m)
- o f) Lowest adjacent (finished) grade (LAG) 1136. 11 ft.(m)
- o g) Highest adjacent (finished) grade (HAG) 1136. 60 ft.(m)
- o h) No. of permanent openings (flood vents) within 1 ft. above adjacent grade _____
- o i) Total area of all permanent openings (flood vents) in C3.h _____sq. in. (sq. cm)

License Number, Embossed Seal, Signature, and Date

Registered Professional Engineer (Civil) CERTIFICATE NO. 12890 JAMES D. LEMON Date Signed 6/16/03 ARIZONA, U.S.A.

SECTION D - SURVEYOR, ENGINEER, OR ARCHITECT CERTIFICATION

This certification is to be signed and sealed by a land surveyor, engineer, or architect authorized by law to certify elevation information.
I certify that the information in Sections A, B, and C on this certificate represents my best efforts to interpret the data available.
I understand that any false statement may be punishable by fine or imprisonment under 18 U.S. Code, Section 1001.

CERTIFIER'S NAME	LICENSE NUMBER	
James D. Lemon, P.E., R.L.S.	# 12890	
TITLE	COMPANY NAME	
President	Landmark Engineering, Inc.	

ADDRESS	CITY	STATE	ZIP CODE
7310 North 16th Street, Suite #285	Phoenix	AZ	85020

SIGNATURE	DATE	TELEPHONE
James D. Lemon	6/16/03	602.861.2005

IMPORTANT: In these spaces, copy the corresponding information from Section A.

BUILDING STREET ADDRESS (Including Apt., Unit, Suite, and/or Bldg. No.) OR P.O. ROUTE AND BOX NO.			For Insurance Company Use:
1245 N. Oakleaf Drive			Policy Number
CITY	STATE	ZIP CODE	Company NAIC Number
Phoenix	AZ	85008	

SECTION D - SURVEYOR, ENGINEER, OR ARCHITECT CERTIFICATION (CONTINUED)

Copy both sides of this Elevation Certificate for (1) community official, (2) insurance agent/company, and (3) building owner.

COMMENTS

☒ Check here if attachments

SECTION E - BUILDING ELEVATION INFORMATION (SURVEY NOT REQUIRED) FOR ZONE AO AND ZONE A (WITHOUT BFE)

For Zone AO and Zone A (without BFE), complete Items E1 through E4. If the Elevation Certificate is intended for use as supporting information for a LOMA or LOMR-F, Section C must be completed.

E1. Building Diagram Number _(Select the building diagram most similar to the building for which this certificate is being completed – see pages 6 and 7. If no diagram accurately represents the building, provide a sketch or photograph.)

E2. The top of the bottom floor (including basement or enclosure) of the building is __ ft.(m) __in.(cm) ☐ above or ☐ below (check one) the highest adjacent grade. (Use natural grade, if available).

E3. For Building Diagrams 6-8 with openings (see page 7), the next higher floor or elevated floor (elevation b) of the building is __ ft.(m) __in.(cm) above the highest adjacent grade. Complete items C3.h and C3.i on front of form.

E4. The top of the platform of machinery and/or equipment servicing the building is __ ft.(m) __in.(cm) ☐ above or ☐ below (check one) the highest adjacent grade. (Use natural grade, if available).

E5. For Zone AO only: If no flood depth number is available, is the top of the bottom floor elevated in accordance with the community's floodplain management ordinance?
☐ Yes ☐ No ☐ Unknown. The local official must certify this information in Section G.

SECTION F - PROPERTY OWNER (OR OWNER'S REPRESENTATIVE) CERTIFICATION

The property owner or owner's authorized representative who completes Sections A, B, C (Items C3.h and C3.i only), and E for Zone A (without a FEMA-issued or community-issued BFE) or Zone AO must sign here. *The statements in Sections A, B, C, and E are correct to the best of my knowledge.*

PROPERTY OWNER'S OR OWNER'S AUTHORIZED REPRESENTATIVE'S NAME

ADDRESS | CITY | STATE | ZIP CODE

SIGNATURE | DATE | TELEPHONE

COMMENTS

☐ Check here if attachments

SECTION G - COMMUNITY INFORMATION (OPTIONAL)

The local official who is authorized by law or ordinance to administer the community's floodplain management ordinance can complete Sections A, B, C (or E), and G of this Elevation Certificate. Complete the applicable item(s) and sign below.

G1. ☐ The information in Section C was taken from other documentation that has been signed and embossed by a licensed surveyor, engineer, or architect who is authorized by state or local law to certify elevation information. (Indicate the source and date of the elevation data in the Comments area below.)

G2. ☐ A community official completed Section E for a building located in Zone A (without a FEMA-issued or community-issued BFE) or Zone AO.

G3. ☐ The following information (Items G4-G9) is provided for community floodplain management purposes.

G4. PERMIT NUMBER	G5. DATE PERMIT ISSUED	G6. DATE CERTIFICATE OF COMPLIANCE/OCCUPANCY ISSUED

G7. This permit has been issued for: ☐ New Construction ☐ Substantial Improvement

G8. Elevation of as-built lowest floor (including basement) of the building is: ____. __ft.(m) Datum: ____

G9. BFE or (in Zone AO) depth of flooding at the building site is: ____. __ ft.(m) Datum: ____

LOCAL OFFICIAL'S NAME | TITLE

COMMUNITY NAME | TELEPHONE

SIGNATURE | DATE

COMMENTS

☐ Check here if attachments

LOT NUMBER : 36 (SEE MAP)

DATE : 08-29-02

PLEASE INDICATE APPROX. MEASUREMENT LOCATION

ADDRESS : 1245 NORTH OAKLEAF DRIVE PHX AZ 85008

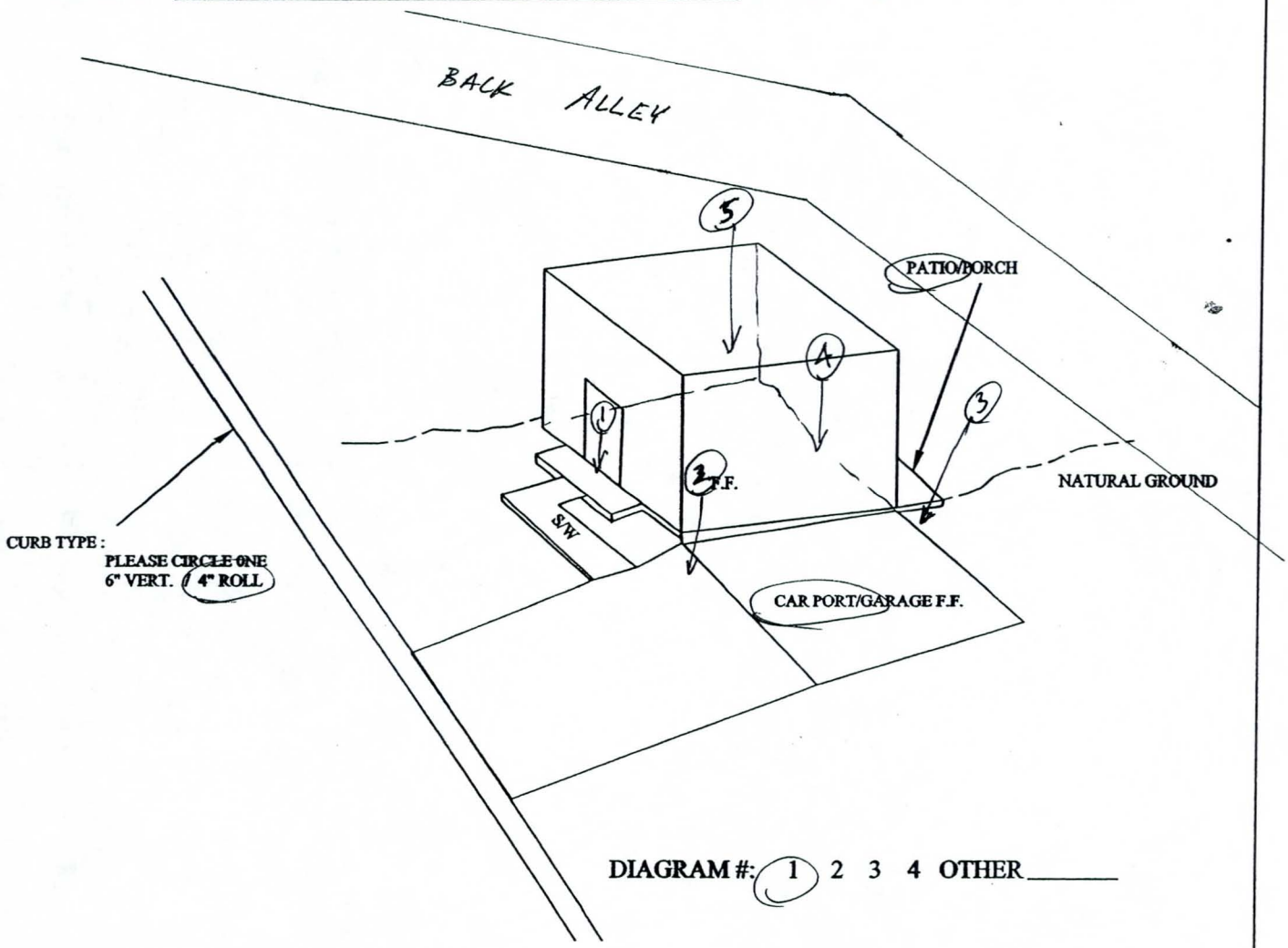

DIAGRAM #: 1 2 3 4 OTHER_____

ELEVATIONS REQUIRED:

1 F.F. RESIDENCE	1136.83	5 1136.12
2 F.F. CAR PORT/GARAGE	1136.54	
3 L.A.G.	1136.11	
4 H.A.G.	1136.60	

L.A.G. - LOWEST ADJACENT GRADE (TO F.F.)
H.A.G. - HIGHEST ADJACENT GRADE (TO F.F.)

RELAVENT NOTES FOR ENGINEER : * 4 FT. HIGH CHAIN LINK FENCE SURROUNDS BACKYARD
*15-20 PARKING CURBS LOCATED ON NW SIDE OF LOT

LANDMARK ENGINEERING, INC.
7310 N. 16TH STREET SUITE 285
PHOENIX, ARIZONA 85020 (602) 861-2005

COP ELEVATION CERT

LOT : 36

FIGURE

FEDERAL EMERGENCY MANAGEMENT AGENCY
NATIONAL FLOOD INSURANCE PROGRAM

ELEVATION CERTIFICATE

O.M.B. No. 3067-0077
Expires December 31, 2005

Important: Read the instructions on pages 1 - 7.

SECTION A - PROPERTY OWNER INFORMATION

For Insurance Company Use:
Policy Number
Company NAIC Number

BUILDING OWNER'S NAME
Anzaldua, Leonor

BUILDING STREET ADDRESS (Including Apt., Unit, Suite, and/or Bldg. No.) OR P.O. ROUTE AND BOX NO.
1239 N. Oakleaf Drive

CITY	STATE	ZIP CODE
Phoenix	AZ	85008

PROPERTY DESCRIPTION (Lot and Block Numbers, Tax Parcel Number, Legal Description, etc.)
Lot #37 Parcel #121-07-115

BUILDING USE (e.g., Residential, Non-residential, Addition, Accessory, etc. Use a Comments area, if necessary.)
Residential

LATITUDE/LONGITUDE (OPTIONAL) (##° - ## - ##.##" or ##.#####°)

HORIZONTAL DATUM: ☒ NAD 1927 ☐ NAD 1983

SOURCE: ☒ GPS (Type):____ ☐ USGS Quad Map ☐ Other: ____

SECTION B - FLOOD INSURANCE RATE MAP (FIRM) INFORMATION

B1. NFIP COMMUNITY NAME & COMMUNITY NUMBER	B2. COUNTY NAME	B3. STATE
Phoenix, City of Community Number 040051	Maricopa County	AZ

B4. MAP AND PANEL NUMBER	B5. SUFFIX	B6. FIRM INDEX DATE	B7. FIRM PANEL EFFECTIVE/REVISED DATE	B8. FLOOD ZONE(S)	B9. BASE FLOOD ELEVATION(S) (Zone AO, use depth of flooding)
04013C2135	E	09/30/95	07/19/01	A	1137.74

B10. Indicate the source of the Base Flood Elevation (BFE) data or base flood depth entered in B9.
☐ FIS Profile ☐ FIRM ☐ Community Determined ☒ Other (Describe): Canal Bank

B11. Indicate the elevation datum used for the BFE in B9: ☒ NGVD 1929 ☐ NAVD 1988 ☐ Other (Describe): ____

B12. Is the building located in a Coastal Barrier Resources System (CBRS) area or Otherwise Protected Area (OPA)? ☐ Yes ☒ No Designation Date____

SECTION C - BUILDING ELEVATION INFORMATION (SURVEY REQUIRED)

C1. Building elevations are based on: ☐ Construction Drawings* ☐ Building Under Construction* ☒ Finished Construction

*A new Elevation Certificate will be required when construction of the building is complete.

C2. Building Diagram Number 1 (Select the building diagram most similar to the building for which this certificate is being completed - see pages 6 and 7. If no diagram accurately represents the building, provide a sketch or photograph.)

C3. Elevations – Zones A1-A30, AE, AH, A (with BFE), VE, V1-V30, V (with BFE), AR, AR/A, AR/AE, AR/A1-A30, AR/AH, AR/AO

Complete Items C3.-a-i below according to the building diagram specified in Item C2. State the datum used. If the datum is different from the datum used for the BFE in Section B, convert the datum to that used for the BFE. Show field measurements and datum conversion calculation. Use the space provided or the Comments area of Section D or Section G, as appropriate, to document the datum conversion.

Datum NGVD Conversion/Comments Benchmark: Brass cap in hand hole; elevation =1138.77 ft. @ centerline intersection o f 32nd Street & McDowell Road

Elevation reference mark used C.O. Phoenix Does the elevation reference mark used appear on the FIRM? ☐ Yes ☒ No

- o a) Top of bottom floor (including basement or enclosure) 1136. 72 ft.(m)
- o b) Top of next higher floor ____. __ft.(m)
- o c) Bottom of lowest horizontal structural member (V zones only) ____. __ft.(m)
- o d) Attached garage (top of slab) 1136. 49 ft.(m)
- o e) Lowest elevation of machinery and/or equipment servicing the building (Describe in a Comments area) ____. __ft.(m)
- o f) Lowest adjacent (finished) grade (LAG) 1136 . 12 ft.(m)
- o g) Highest adjacent (finished) grade (HAG) 1136. 40 ft.(m)
- o h) No. of permanent openings (flood vents) within 1 ft. above adjacent grade ____
- o i) Total area of all permanent openings (flood vents) in C3.h ____sq. in. (sq. cm)

License Number, Embossed Seal, Signature, and Date

Registered Professional Engineer (Civil) CERTIFICATE NO. 12890 JAMES D. LEMON Date Signed 6/16/03 ARIZONA, U.S.A.

SECTION D - SURVEYOR, ENGINEER, OR ARCHITECT CERTIFICATION

This certification is to be signed and sealed by a land surveyor, engineer, or architect authorized by law to certify elevation information.
I certify that the information in Sections A, B, and C on this certificate represents my best efforts to interpret the data available.
I understand that any false statement may be punishable by fine or imprisonment under 18 U.S. Code, Section 1001.

CERTIFIER'S NAME	LICENSE NUMBER		
James D. Lemon, P.E., R.L.S.	# 12890		
TITLE	COMPANY NAME		
President	Landmark Engineering, Inc.		
ADDRESS	CITY	STATE	ZIP CODE
7310 North 16th Street, Suite #285	Phoenix	AZ	85020
SIGNATURE	DATE	TELEPHONE	
James D. Lemon	6/16/03	602.861.2005	

IMPORTANT: In these spaces, copy the corresponding information from Section A.			For Insurance Company Use:
BUILDING STREET ADDRESS (Including Apt., Unit, Suite, and/or Bldg. No.) OR P.O. ROUTE AND BOX NO. 1239 N. Oakleaf Drive			Policy Number
CITY Phoenix	STATE AZ	ZIP CODE 85008	Company NAIC Number

SECTION D - SURVEYOR, ENGINEER, OR ARCHITECT CERTIFICATION (CONTINUED)

Copy both sides of this Elevation Certificate for (1) community official, (2) insurance agent/company, and (3) building owner.

COMMENTS

☒ Check here if attachments

SECTION E - BUILDING ELEVATION INFORMATION (SURVEY NOT REQUIRED) FOR ZONE AO AND ZONE A (WITHOUT BFE)

For Zone AO and Zone A (without BFE), complete Items E1 through E4. If the Elevation Certificate is intended for use as supporting information for a LOMA or LOMR-F, Section C must be completed.

E1. Building Diagram Number _(Select the building diagram most similar to the building for which this certificate is being completed – see pages 6 and 7. If no diagram accurately represents the building, provide a sketch or photograph.)

E2. The top of the bottom floor (including basement or enclosure) of the building is __ ft.(m) __in.(cm) ☐ above or ☐ below (check one) the highest adjacent grade. (Use natural grade, if available).

E3. For Building Diagrams 6-8 with openings (see page 7), the next higher floor or elevated floor (elevation b) of the building is __ ft.(m) __in.(cm) above the highest adjacent grade. Complete items C3.h and C3.i on front of form.

E4. The top of the platform of machinery and/or equipment servicing the building is __ ft.(m) __in.(cm) ☐ above or ☐ below (check one) the highest adjacent grade. (Use natural grade, if available).

E5. For Zone AO only: If no flood depth number is available, is the top of the bottom floor elevated in accordance with the community's floodplain management ordinance?
☐ Yes ☐ No ☐ Unknown. The local official must certify this information in Section G.

SECTION F - PROPERTY OWNER (OR OWNER'S REPRESENTATIVE) CERTIFICATION

The property owner or owner's authorized representative who completes Sections A, B, C (Items C3.h and C3.i only), and E for Zone A (without a FEMA-issued or community-issued BFE) or Zone AO must sign here. *The statements in Sections A, B, C, and E are correct to the best of my knowledge.*

PROPERTY OWNER'S OR OWNER'S AUTHORIZED REPRESENTATIVE'S NAME

ADDRESS | CITY | STATE | ZIP CODE

SIGNATURE | DATE | TELEPHONE

COMMENTS

☐ Check here if attachments

SECTION G - COMMUNITY INFORMATION (OPTIONAL)

The local official who is authorized by law or ordinance to administer the community's floodplain management ordinance can complete Sections A, B, C (or E), and G of this Elevation Certificate. Complete the applicable item(s) and sign below.

G1. ☐ The information in Section C was taken from other documentation that has been signed and embossed by a licensed surveyor, engineer, or architect who is authorized by state or local law to certify elevation information. (Indicate the source and date of the elevation data in the Comments area below.)

G2. ☐ A community official completed Section E for a building located in Zone A (without a FEMA-issued or community-issued BFE) or Zone AO.

G3. ☐ The following information (Items G4-G9) is provided for community floodplain management purposes.

G4. PERMIT NUMBER	G5. DATE PERMIT ISSUED	G6. DATE CERTIFICATE OF COMPLIANCE/OCCUPANCY ISSUED

G7. This permit has been issued for: ☐ New Construction ☐ Substantial Improvement

G8. Elevation of as-built lowest floor (including basement) of the building is: ____. __ft.(m) Datum: _____

G9. BFE or (in Zone AO) depth of flooding at the building site is: ____. __ ft.(m) Datum: _____

LOCAL OFFICIAL'S NAME | TITLE

COMMUNITY NAME | TELEPHONE

SIGNATURE | DATE

COMMENTS

☐ Check here if attachments

LOT NUMBER : 37 (SEE MAP)

DATE : 08-29-02

PLEASE INDICATE APPROX. MEASUREMENT LOCATION

ADDRESS : 1239 NORTH OAKLEAF DRIVE PHX AZ 85008

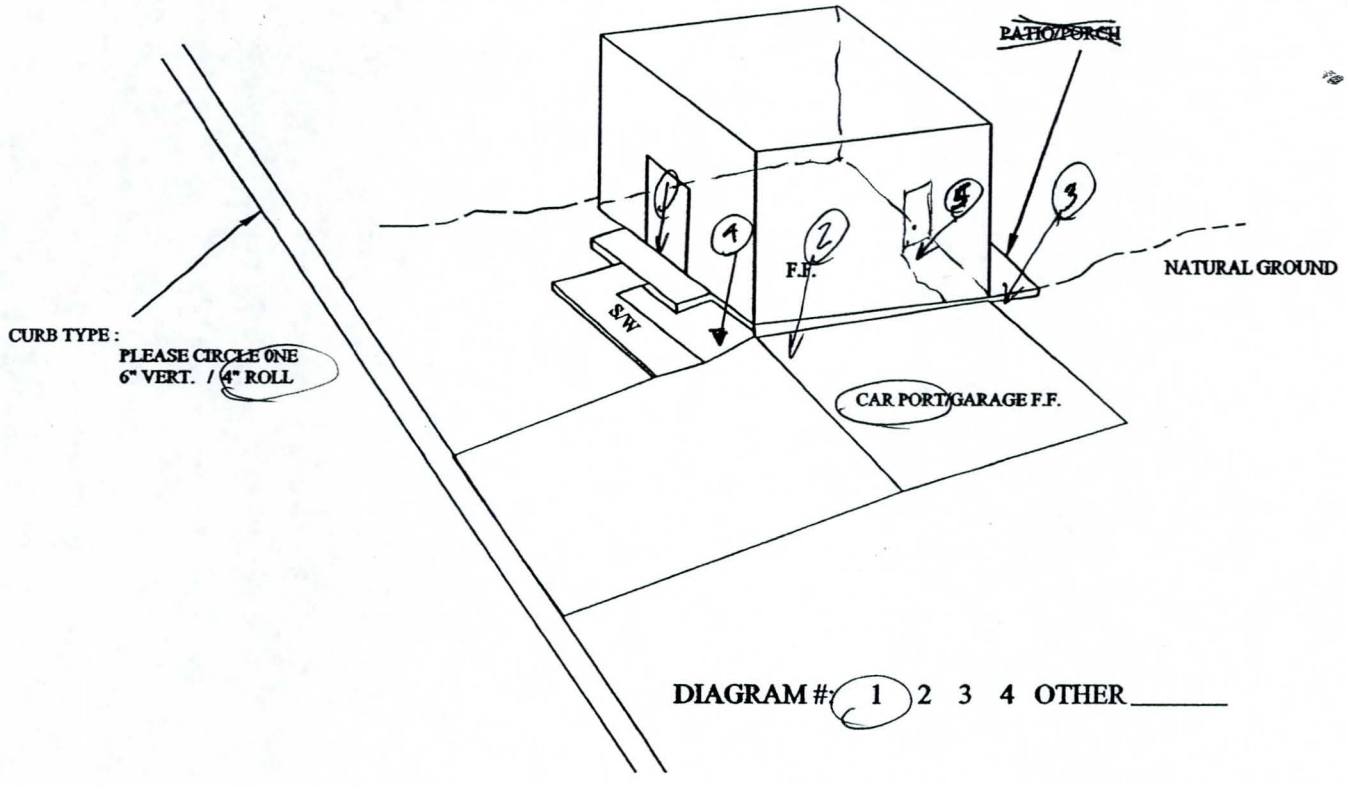

DIAGRAM #: 1 2 3 4 OTHER _____

ELEVATIONS REQUIRED:

1 F.F. RESIDENCE	1136.72	
2 F.F. CAR PORT/GARAGE	1136.49	
3 L.A.G.	1136.12	
4 H.A.G.	1136.40 NG	
5	1136.72	

L.A.G. - LOWEST ADJACENT GRADE (TO F.F.)
H.A.G. - HIGHEST ADJACENT GRADE (TO F.F.)

RELAVENT NOTES FOR ENGINEER: *NO PATIO/PORCH IMMEDIATELY NEXT TO BUILDING
*BACK DOOR OPENS TO NATURAL GROUND STEP DOWN

LANDMARK ENGINEERING, INC.
7310 N. 16TH STREET SUITE 285
PHOENIX, ARIZONA 85020 (602) 861-2005

COP ELEVATION CERT

LOT : 37

FIGURE

FEDERAL EMERGENCY MANAGEMENT AGENCY
NATIONAL FLOOD INSURANCE PROGRAM

ELEVATION CERTIFICATE

O.M.B. No. 3067-0077
Expires December 31, 2005

Important: Read the instructions on pages 1 - 7.

SECTION A - PROPERTY OWNER INFORMATION

For Insurance Company Use:
Policy Number
Company NAIC Number

BUILDING OWNER'S NAME
Herrera, Israel

BUILDING STREET ADDRESS (Including Apt., Unit, Suite, and/or Bldg. No.) OR P.O. ROUTE AND BOX NO.
1233 N. Oakleaf Drive

CITY	STATE	ZIP CODE
Phoenix	AZ	85008

PROPERTY DESCRIPTION (Lot and Block Numbers, Tax Parcel Number, Legal Description, etc.)
Lot #38 Parcel #121-07-116

BUILDING USE (e.g., Residential, Non-residential, Addition, Accessory, etc. Use a Comments area, if necessary.)
Residential

LATITUDE/LONGITUDE (OPTIONAL) (##° - ## - ##.##" or ##.#####°)
HORIZONTAL DATUM: ☒ NAD 1927 ☐ NAD 1983
SOURCE: ☒ GPS (Type):_____ ☐ USGS Quad Map ☐ Other: _____

SECTION B - FLOOD INSURANCE RATE MAP (FIRM) INFORMATION

B1. NFIP COMMUNITY NAME & COMMUNITY NUMBER	B2. COUNTY NAME	B3. STATE
Phoenix, City of Community Number 040051	Maricopa County	AZ

B4. MAP AND PANEL NUMBER	B5. SUFFIX	B6. FIRM INDEX DATE	B7. FIRM PANEL EFFECTIVE/REVISED DATE	B8. FLOOD ZONE(S)	B9. BASE FLOOD ELEVATION(S) (Zone AO, use depth of flooding)
04013C2135	E	09/30/95	07/19/01	A	1137.39

B10. Indicate the source of the Base Flood Elevation (BFE) data or base flood depth entered in B9.
☐ FIS Profile ☐ FIRM ☐ Community Determined ☒ Other (Describe): Canal Bank

B11. Indicate the elevation datum used for the BFE in B9: ☒ NGVD 1929 ☐ NAVD 1988 ☐ Other (Describe): _____

B12. Is the building located in a Coastal Barrier Resources System (CBRS) area or Otherwise Protected Area (OPA)? ☐ Yes ☒ No Designation Date_____

SECTION C - BUILDING ELEVATION INFORMATION (SURVEY REQUIRED)

C1. Building elevations are based on: ☐ Construction Drawings* ☐ Building Under Construction* ☒ Finished Construction
*A new Elevation Certificate will be required when construction of the building is complete.

C2. Building Diagram Number 1 (Select the building diagram most similar to the building for which this certificate is being completed - see pages 6 and 7. If no diagram accurately represents the building, provide a sketch or photograph.)

C3. Elevations – Zones A1-A30, AE, AH, A (with BFE), VE, V1-V30, V (with BFE), AR, AR/A, AR/AE, AR/A1-A30, AR/AH, AR/AO
Complete Items C3.-a-i below according to the building diagram specified in Item C2. State the datum used. If the datum is different from the datum used for the BFE in Section B, convert the datum to that used for the BFE. Show field measurements and datum conversion calculation. Use the space provided or the Comments area of Section D or Section G, as appropriate, to document the datum conversion.
Datum NGVD Conversion/Comments Benchmark: Brass cap in hand hole; elevation =1138.77 ft. @ centerline intersection o f 32nd Street & McDowell Road
Elevation reference mark used C.O. Phoenix Does the elevation reference mark used appear on the FIRM? ☐ Yes ☒ No

- o a) Top of bottom floor (including basement or enclosure) 1136. 70 ft.(m)
- o b) Top of next higher floor ____. __ft.(m)
- o c) Bottom of lowest horizontal structural member (V zones only) ____. __ft.(m)
- o d) Attached garage (top of slab) 1136. 68 ft.(m)
- o e) Lowest elevation of machinery and/or equipment servicing the building (Describe in a Comments area) ____. __ft.(m)
- o f) Lowest adjacent (finished) grade (LAG) 1136 . 00 ft.(m)
- o g) Highest adjacent (finished) grade (HAG) 1136. 58 ft.(m)
- o h) No. of permanent openings (flood vents) within 1 ft. above adjacent grade _____
- o i) Total area of all permanent openings (flood vents) in C3.h _____sq. in. (sq. cm)

License Number, Embossed Seal, Signature, and Date

Registered Professional Engineer (Civil) CERTIFICATE NO. 12890 JAMES D. LEMON Date Signed 6/16/03 ARIZONA, U.S.A.

SECTION D - SURVEYOR, ENGINEER, OR ARCHITECT CERTIFICATION

This certification is to be signed and sealed by a land surveyor, engineer, or architect authorized by law to certify elevation information.
I certify that the information in Sections A, B, and C on this certificate represents my best efforts to interpret the data available.
I understand that any false statement may be punishable by fine or imprisonment under 18 U.S. Code, Section 1001.

CERTIFIER'S NAME	LICENSE NUMBER
James D. Lemon, P.E., R.L.S.	# 12890

TITLE	COMPANY NAME
President	Landmark Engineering, Inc.

ADDRESS	CITY	STATE	ZIP CODE
7310 North 16th Street, Suite #285	Phoenix	AZ	85020

SIGNATURE	DATE	TELEPHONE
James D. Lemon	6/16/03	602.861.2005

IMPORTANT: In these spaces, copy the corresponding information from Section A.

BUILDING STREET ADDRESS (Including Apt., Unit, Suite, and/or Bldg. No.) OR P.O. ROUTE AND BOX NO.			For Insurance Company Use:
1233 N. Oakleaf Drive			Policy Number
CITY	STATE	ZIP CODE	Company NAIC Number
Phoenix	AZ	85008	

SECTION D - SURVEYOR, ENGINEER, OR ARCHITECT CERTIFICATION (CONTINUED)

Copy both sides of this Elevation Certificate for (1) community official, (2) insurance agent/company, and (3) building owner.

COMMENTS

☒ Check here if attachments

SECTION E - BUILDING ELEVATION INFORMATION (SURVEY NOT REQUIRED) FOR ZONE AO AND ZONE A (WITHOUT BFE)

For Zone AO and Zone A (without BFE), complete Items E1 through E4. If the Elevation Certificate is intended for use as supporting information for a LOMA or LOMR-F, Section C must be completed.

E1. Building Diagram Number _(Select the building diagram most similar to the building for which this certificate is being completed – see pages 6 and 7. If no diagram accurately represents the building, provide a sketch or photograph.)

E2. The top of the bottom floor (including basement or enclosure) of the building is __ ft.(m) __in.(cm) ☐ above or ☐ below (check one) the highest adjacent grade. (Use natural grade, if available).

E3. For Building Diagrams 6-8 with openings (see page 7), the next higher floor or elevated floor (elevation b) of the building is __ ft.(m) __in.(cm) above the highest adjacent grade. Complete items C3.h and C3.i on front of form.

E4. The top of the platform of machinery and/or equipment servicing the building is __ ft.(m) __in.(cm) ☐ above or ☐ below (check one) the highest adjacent grade. (Use natural grade, if available).

E5. For Zone AO only: If no flood depth number is available, is the top of the bottom floor elevated in accordance with the community's floodplain management ordinance?
☐ Yes ☐ No ☐ Unknown. The local official must certify this information in Section G.

SECTION F - PROPERTY OWNER (OR OWNER'S REPRESENTATIVE) CERTIFICATION

The property owner or owner's authorized representative who completes Sections A, B, C (Items C3.h and C3.i only), and E for Zone A (without a FEMA-issued or community-issued BFE) or Zone AO must sign here. *The statements in Sections A, B, C, and E are correct to the best of my knowledge.*

PROPERTY OWNER'S OR OWNER'S AUTHORIZED REPRESENTATIVE'S NAME

ADDRESS | CITY | STATE | ZIP CODE

SIGNATURE | DATE | TELEPHONE

COMMENTS

☐ Check here if attachments

SECTION G - COMMUNITY INFORMATION (OPTIONAL)

The local official who is authorized by law or ordinance to administer the community's floodplain management ordinance can complete Sections A, B, C (or E), and G of this Elevation Certificate. Complete the applicable item(s) and sign below.

G1. ☐ The information in Section C was taken from other documentation that has been signed and embossed by a licensed surveyor, engineer, or architect who is authorized by state or local law to certify elevation information. (Indicate the source and date of the elevation data in the Comments area below.)

G2. ☐ A community official completed Section E for a building located in Zone A (without a FEMA-issued or community-issued BFE) or Zone AO.

G3. ☐ The following information (Items G4-G9) is provided for community floodplain management purposes.

G4. PERMIT NUMBER	G5. DATE PERMIT ISSUED	G6. DATE CERTIFICATE OF COMPLIANCE/OCCUPANCY ISSUED

G7. This permit has been issued for: ☐ New Construction ☐ Substantial Improvement

G8. Elevation of as-built lowest floor (including basement) of the building is: ____.__ft.(m) Datum: _____

G9. BFE or (in Zone AO) depth of flooding at the building site is: ____.__ ft.(m) Datum: _____

LOCAL OFFICIAL'S NAME | TITLE

COMMUNITY NAME | TELEPHONE

SIGNATURE | DATE

COMMENTS

☐ Check here if attachments

LOT NUMBER : 38 (SEE MAP)

DATE : 08-29-02

PLEASE INDICATE APPROX. MEASUREMENT LOCATION

ADDRESS : 1233 NORTH OAKLEAF DRIVE PHX AZ 85008

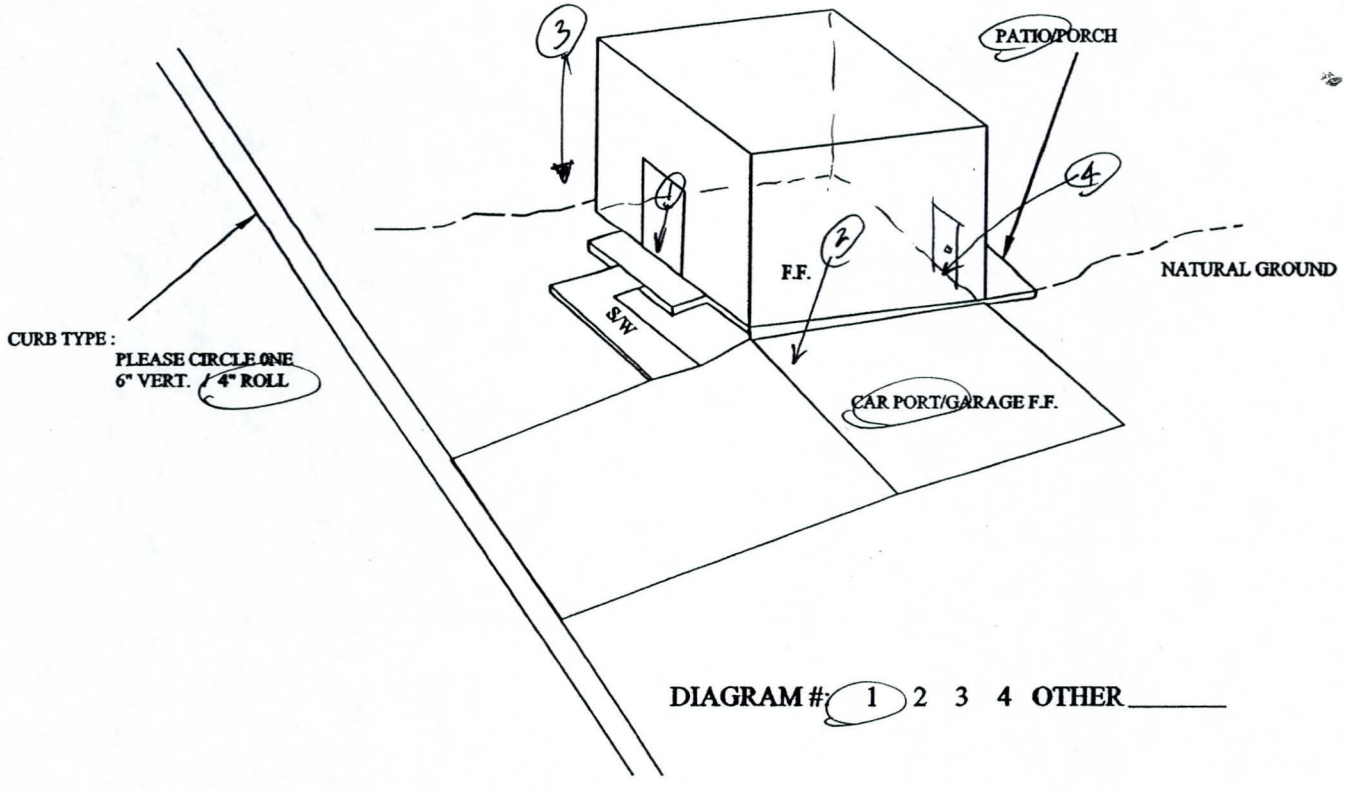

DIAGRAM #: 1 2 3 4 OTHER _____

ELEVATIONS REQUIRED:

1 F.F. RESIDENCE	1136.70
2 F.F. CAR PORT/GARAGE	1136.68
3 L.A.G.	1136.00
4 H.A.G.	1136.58

L.A.G. - LOWEST ADJACENT GRADE (TO F.F.)
H.A.G. - HIGHEST ADJACENT GRADE (TO F.F.)

RELAVENT NOTES FOR ENGINEER : _____

LANDMARK ENGINEERING, INC.
7310 N. 16TH STREET SUITE 285
PHOENIX, ARIZONA 85020 (602) 861-2005

COP ELEVATION CERT

LOT : 38

FIGURE

FEDERAL EMERGENCY MANAGEMENT AGENCY
NATIONAL FLOOD INSURANCE PROGRAM

ELEVATION CERTIFICATE

O.M.B. No. 3067-0077
Expires December 31, 2005

Important: Read the instructions on pages 1 - 7.

SECTION A - PROPERTY OWNER INFORMATION

For Insurance Company Use:
Policy Number
Company NAIC Number

BUILDING OWNER'S NAME
Renteria, Prudencio B. / Dora R.

BUILDING STREET ADDRESS (Including Apt., Unit, Suite, and/or Bldg. No.) OR P.O. ROUTE AND BOX NO.
1223 N. Oakleaf Drive

CITY	STATE	ZIP CODE
Phoenix	AZ	85008

PROPERTY DESCRIPTION (Lot and Block Numbers, Tax Parcel Number, Legal Description, etc.)
Lot #43 Parcel #121-07-121

BUILDING USE (e.g., Residential, Non-residential, Addition, Accessory, etc. Use a Comments area, if necessary.)
Residential

LATITUDE/LONGITUDE (OPTIONAL) (##° - ##' - ##.##" or ##.#####°)

HORIZONTAL DATUM: ☒ NAD 1927 ☐ NAD 1983

SOURCE: ☒ GPS (Type):____ ☐ USGS Quad Map ☐ Other: ____

SECTION B - FLOOD INSURANCE RATE MAP (FIRM) INFORMATION

B1. NFIP COMMUNITY NAME & COMMUNITY NUMBER	B2. COUNTY NAME	B3. STATE
Phoenix, City of Community Number 040051	Maricopa County	AZ

B4. MAP AND PANEL NUMBER	B5. SUFFIX	B6. FIRM INDEX DATE	B7. FIRM PANEL EFFECTIVE/REVISED DATE	B8. FLOOD ZONE(S)	B9. BASE FLOOD ELEVATION(S) (Zone AO, use depth of flooding)
04013C2135	E	09/30/95	07/19/01	A	1136.90

B10. Indicate the source of the Base Flood Elevation (BFE) data or base flood depth entered in B9.
☐ FIS Profile ☐ FIRM ☐ Community Determined ☒ Other (Describe): Canal Bank

B11. Indicate the elevation datum used for the BFE in B9: ☒ NGVD 1929 ☐ NAVD 1988 ☐ Other (Describe): ____

B12. Is the building located in a Coastal Barrier Resources System (CBRS) area or Otherwise Protected Area (OPA)? ☐ Yes ☒ No Designation Date____

SECTION C - BUILDING ELEVATION INFORMATION (SURVEY REQUIRED)

C1. Building elevations are based on: ☐ Construction Drawings* ☐ Building Under Construction* ☒ Finished Construction

*A new Elevation Certificate will be required when construction of the building is complete.

C2. Building Diagram Number 1 (Select the building diagram most similar to the building for which this certificate is being completed - see pages 6 and 7. If no diagram accurately represents the building, provide a sketch or photograph.)

C3. Elevations – Zones A1-A30, AE, AH, A (with BFE), VE, V1-V30, V (with BFE), AR, AR/A, AR/AE, AR/A1-A30, AR/AH, AR/AO

Complete Items C3.-a-i below according to the building diagram specified in Item C2. State the datum used. If the datum is different from the datum used for the BFE in Section B, convert the datum to that used for the BFE. Show field measurements and datum conversion calculation. Use the space provided or the Comments area of Section D or Section G, as appropriate, to document the datum conversion.

Datum NGVD Conversion/Comments Benchmark: Brass cap in hand hole; elevation =1138.77 ft. @ centerline intersection o f 32nd Street & McDowell Road

Elevation reference mark used C.O. Phoenix Does the elevation reference mark used appear on the FIRM? ☐ Yes ☒ No

- o a) Top of bottom floor (including basement or enclosure) DNP. __ft.(m)
- o b) Top of next higher floor ____. __ft.(m)
- o c) Bottom of lowest horizontal structural member (V zones only) ____. __ft.(m)
- o d) Attached garage (top of slab) DNP. __ft.(m)
- o e) Lowest elevation of machinery and/or equipment servicing the building (Describe in a Comments area) ____. __ft.(m)
- o f) Lowest adjacent (finished) grade (LAG) DNP. __ft.(m)
- o g) Highest adjacent (finished) grade (HAG) DNP. __ft.(m)
- o h) No. of permanent openings (flood vents) within 1 ft. above adjacent grade ____
- o i) Total area of all permanent openings (flood vents) in C3.h ____sq. in. (sq. cm)

License Number, Embossed Seal, Signature, and Date

Registered Professional Engineer (Civil) CERTIFICATE NO. 12890 JAMES D. LEMON Date Signed 6/16/03 ARIZONA, U.S.A.

SECTION D - SURVEYOR, ENGINEER, OR ARCHITECT CERTIFICATION

This certification is to be signed and sealed by a land surveyor, engineer, or architect authorized by law to certify elevation information.
I certify that the information in Sections A, B, and C on this certificate represents my best efforts to interpret the data available.
I understand that any false statement may be punishable by fine or imprisonment under 18 U.S. Code, Section 1001.

CERTIFIER'S NAME	LICENSE NUMBER		
James D. Lemon, P.E., R.L.S.	# 12890		
TITLE	COMPANY NAME		
President	Landmark Engineering, Inc.		
ADDRESS	CITY	STATE	ZIP CODE
7310 North 16th Street, Suite #285	Phoenix	AZ	85020
SIGNATURE	DATE	TELEPHONE	
James D. Lemon	6/16/03	602.861.2005	

IMPORTANT: In these spaces, copy the corresponding information from Section A.			For Insurance Company Use:
BUILDING STREET ADDRESS (Including Apt., Unit, Suite, and/or Bldg. No.) OR P.O. ROUTE AND BOX NO. 1223 N. Oakleaf Drive			Policy Number
CITY Phoenix	STATE AZ	ZIP CODE 85008	Company NAIC Number

SECTION D - SURVEYOR, ENGINEER, OR ARCHITECT CERTIFICATION (CONTINUED)

Copy both sides of this Elevation Certificate for (1) community official, (2) insurance agent/company, and (3) building owner.

COMMENTS

Homeowner came out of house and said that he did not want us to survey. Instructed us that we could take elevation shots close to street but nothing else.

☒ Check here if attachments

SECTION E - BUILDING ELEVATION INFORMATION (SURVEY NOT REQUIRED) FOR ZONE AO AND ZONE A (WITHOUT BFE)

For Zone AO and Zone A (without BFE), complete Items E1 through E4. If the Elevation Certificate is intended for use as supporting information for a LOMA or LOMR-F, Section C must be completed.

E1. Building Diagram Number _(Select the building diagram most similar to the building for which this certificate is being completed – see pages 6 and 7. If no diagram accurately represents the building, provide a sketch or photograph.)

E2. The top of the bottom floor (including basement or enclosure) of the building is __ ft.(m) __in.(cm) ☐ above or ☐ below (check one) the highest adjacent grade. (Use natural grade, if available).

E3. For Building Diagrams 6-8 with openings (see page 7), the next higher floor or elevated floor (elevation b) of the building is __ ft.(m) __in.(cm) above the highest adjacent grade. Complete items C3.h and C3.i on front of form.

E4. The top of the platform of machinery and/or equipment servicing the building is __ ft.(m) __in.(cm) ☐ above or ☐ below (check one) the highest adjacent grade. (Use natural grade, if available).

E5. For Zone AO only: If no flood depth number is available, is the top of the bottom floor elevated in accordance with the community's floodplain management ordinance?
☐ Yes ☐ No ☐ Unknown. The local official must certify this information in Section G.

SECTION F - PROPERTY OWNER (OR OWNER'S REPRESENTATIVE) CERTIFICATION

The property owner or owner's authorized representative who completes Sections A, B, C (Items C3.h and C3.i only), and E for Zone A (without a FEMA-issued or community-issued BFE) or Zone AO must sign here. *The statements in Sections A, B, C, and E are correct to the best of my knowledge.*

PROPERTY OWNER'S OR OWNER'S AUTHORIZED REPRESENTATIVE'S NAME

ADDRESS | CITY | STATE | ZIP CODE

SIGNATURE | DATE | TELEPHONE

COMMENTS

☐ Check here if attachments

SECTION G - COMMUNITY INFORMATION (OPTIONAL)

The local official who is authorized by law or ordinance to administer the community's floodplain management ordinance can complete Sections A, B, C (or E), and G of this Elevation Certificate. Complete the applicable item(s) and sign below.

G1. ☐ The information in Section C was taken from other documentation that has been signed and embossed by a licensed surveyor, engineer, or architect who is authorized by state or local law to certify elevation information. (Indicate the source and date of the elevation data in the Comments area below.)

G2. ☐ A community official completed Section E for a building located in Zone A (without a FEMA-issued or community-issued BFE) or Zone AO.

G3. ☐ The following information (Items G4-G9) is provided for community floodplain management purposes.

G4. PERMIT NUMBER	G5. DATE PERMIT ISSUED	G6. DATE CERTIFICATE OF COMPLIANCE/OCCUPANCY ISSUED

G7. This permit has been issued for: ☐ New Construction ☐ Substantial Improvement

G8. Elevation of as-built lowest floor (including basement) of the building is: ____. __ft.(m) Datum: _____

G9. BFE or (in Zone AO) depth of flooding at the building site is: ____. __ ft.(m) Datum: _____

LOCAL OFFICIAL'S NAME | TITLE

COMMUNITY NAME | TELEPHONE

SIGNATURE | DATE

COMMENTS

☐ Check here if attachments

LOT NUMBER : 43 (SEE MAP)

DATE : 08-29-02

PLEASE INDICATE APPROX. MEASUREMENT LOCATION

ADDRESS : 1223 NORTH OAKLEAF DRIVE PHX AZ 85008

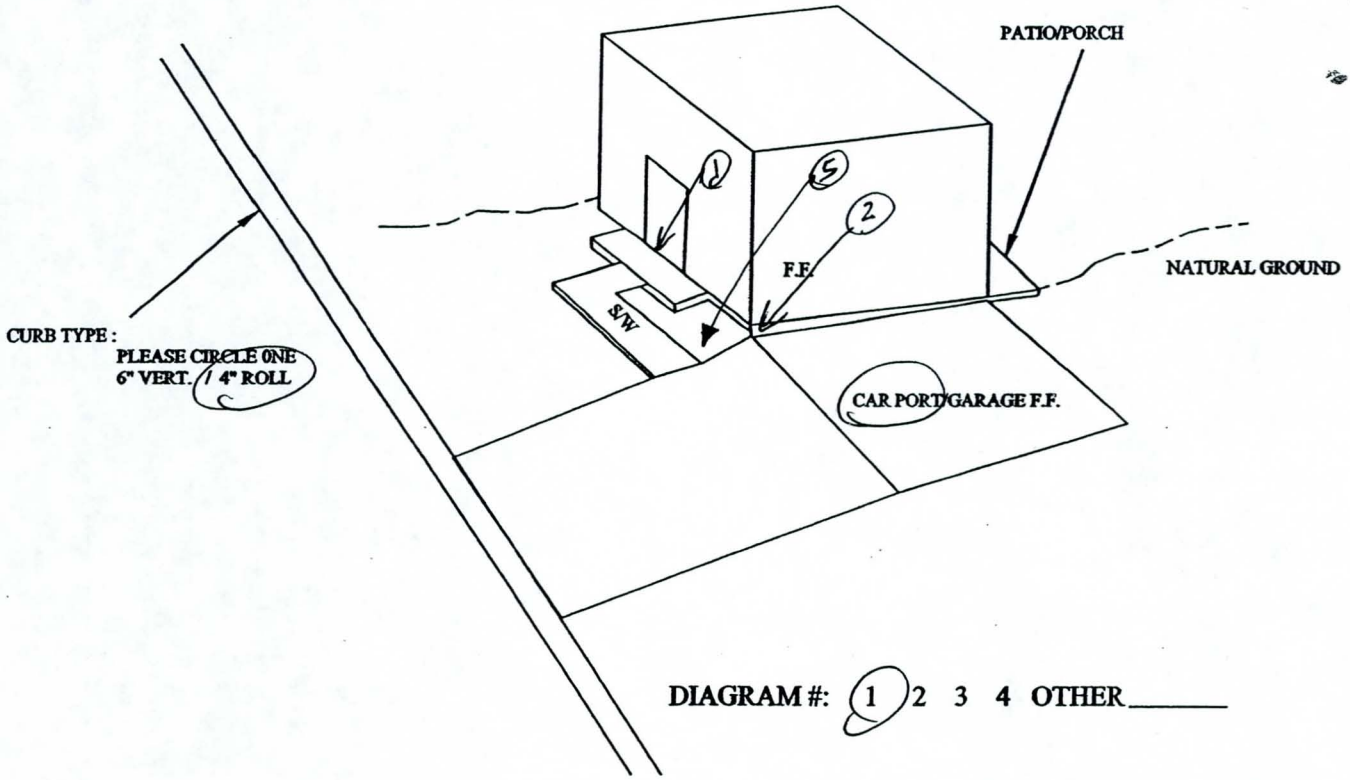

DIAGRAM #: 1 2 3 4 OTHER_____

ELEVATIONS REQUIRED:

① F.F. RESIDENCE N/A

② F.F. CAR PORT/GARAGE N/A

③ L.A.G. N/A

④ H.A.G. N/A

⑤ 1136.39

L.A.G. - LOWEST ADJACENT GRADE (TO F.F.)
H.A.G. - HIGHEST ADJACENT GRADE (TO F.F.)

RELAVENT NOTES FOR ENGINEER : * OWNER DENIED ACCESS TO HIS BACKYARD AND WANTED US TO LEAVE HIS PROPERTY.

LANDMARK ENGINEERING, INC.
7310 N. 16TH STREET SUITE 285
PHOENIX, ARIZONA 85020 (602) 861-2005

COP ELEVATION CERT

LOT : 43

FIGURE

FEDERAL EMERGENCY MANAGEMENT AGENCY
NATIONAL FLOOD INSURANCE PROGRAM

ELEVATION CERTIFICATE

O.M.B. No. 3067-0077
Expires December 31, 2005

Important: Read the instructions on pages 1 - 7.

SECTION A - PROPERTY OWNER INFORMATION

For Insurance Company Use:
Policy Number
Company NAIC Number

BUILDING OWNER'S NAME
Juarez, Antonio

BUILDING STREET ADDRESS (Including Apt., Unit, Suite, and/or Bldg. No.) OR P.O. ROUTE AND BOX NO.
1219 N. Oakleaf Drive

CITY	STATE	ZIP CODE
Phoenix	AZ	85008

PROPERTY DESCRIPTION (Lot and Block Numbers, Tax Parcel Number, Legal Description, etc.)
Lot #44 Parcel #121-07-122

BUILDING USE (e.g., Residential, Non-residential, Addition, Accessory, etc. Use a Comments area, if necessary.)
Residential

LATITUDE/LONGITUDE (OPTIONAL) (##° - ##' - ##.##" or ##.#####°)

HORIZONTAL DATUM: ☒ NAD 1927 ☐ NAD 1983

SOURCE: ☒ GPS (Type):____ ☐ USGS Quad Map ☐ Other: _____

SECTION B - FLOOD INSURANCE RATE MAP (FIRM) INFORMATION

B1. NFIP COMMUNITY NAME & COMMUNITY NUMBER	B2. COUNTY NAME	B3. STATE
Phoenix, City of Community Number 040051	Maricopa County	AZ

B4. MAP AND PANEL NUMBER	B5. SUFFIX	B6. FIRM INDEX DATE	B7. FIRM PANEL EFFECTIVE/REVISED DATE	B8. FLOOD ZONE(S)	B9. BASE FLOOD ELEVATION(S) (Zone AO, use depth of flooding)
04013C2135	E	09/30/95	07/19/01	A	1136.80

B10. Indicate the source of the Base Flood Elevation (BFE) data or base flood depth entered in B9.
☐ FIS Profile ☐ FIRM ☐ Community Determined ☒ Other (Describe): Canal Bank

B11. Indicate the elevation datum used for the BFE in B9: ☒ NGVD 1929 ☐ NAVD 1988 ☐ Other (Describe): _____

B12. Is the building located in a Coastal Barrier Resources System (CBRS) area or Otherwise Protected Area (OPA)? ☐ Yes ☒ No Designation Date_____

SECTION C - BUILDING ELEVATION INFORMATION (SURVEY REQUIRED)

C1. Building elevations are based on: ☐ Construction Drawings* ☐ Building Under Construction* ☒ Finished Construction

*A new Elevation Certificate will be required when construction of the building is complete.

C2. Building Diagram Number 1 (Select the building diagram most similar to the building for which this certificate is being completed - see pages 6 and 7. If no diagram accurately represents the building, provide a sketch or photograph.)

C3. Elevations – Zones A1-A30, AE, AH, A (with BFE), VE, V1-V30, V (with BFE), AR, AR/A, AR/AE, AR/A1-A30, AR/AH, AR/AO

Complete Items C3.-a-i below according to the building diagram specified in Item C2. State the datum used. If the datum is different from the datum used for the BFE in Section B, convert the datum to that used for the BFE. Show field measurements and datum conversion calculation. Use the space provided or the Comments area of Section D or Section G, as appropriate, to document the datum conversion.

Datum NGVD Conversion/Comments Benchmark: Brass cap in hand hole; elevation =1138.77 ft. @ centerline intersection o f 32nd Street & McDowell Road

Elevation reference mark used C.O. Phoenix Does the elevation reference mark used appear on the FIRM? ☐ Yes ☒ No

o a) Top of bottom floor (including basement or enclosure)	1137. 80 ft.(m)
o b) Top of next higher floor	____. __ft.(m)
o c) Bottom of lowest horizontal structural member (V zones only)	____. __ft.(m)
o d) Attached garage (top of slab)	1136. 68 ft.(m)
o e) Lowest elevation of machinery and/or equipment servicing the building (Describe in a Comments area)	____. __ft.(m)
o f) Lowest adjacent (finished) grade (LAG)	1136. 27 ft.(m)
o g) Highest adjacent (finished) grade (HAG)	1136. 90 ft.(m)
o h) No. of permanent openings (flood vents) within 1 ft. above adjacent grade ____	
o i) Total area of all permanent openings (flood vents) in C3.h _____sq. in. (sq. cm)	

License Number, Embossed Seal, Signature, and Date

Registered Professional Engineer (Civil) CERTIFICATE NO. 12890 JAMES D. LEMON Date Signed 6/16/03 ARIZONA, U.S.A.

SECTION D - SURVEYOR, ENGINEER, OR ARCHITECT CERTIFICATION

This certification is to be signed and sealed by a land surveyor, engineer, or architect authorized by law to certify elevation information.
I certify that the information in Sections A, B, and C on this certificate represents my best efforts to interpret the data available.
I understand that any false statement may be punishable by fine or imprisonment under 18 U.S. Code, Section 1001.

CERTIFIER'S NAME	LICENSE NUMBER		
James D. Lemon, P.E., R.L.S.	# 12890		
TITLE	COMPANY NAME		
President	Landmark Engineering, Inc.		
ADDRESS	CITY	STATE	ZIP CODE
7310 North 16th Street, Suite #285	Phoenix	AZ	85020
SIGNATURE	DATE	TELEPHONE	
	6/16/03	602.861.2005	

IMPORTANT: In these spaces, copy the corresponding information from Section A.

BUILDING STREET ADDRESS (Including Apt., Unit, Suite, and/or Bldg. No.) OR P.O. ROUTE AND BOX NO.			For Insurance Company Use:
1219 N. Oakleaf Drive			Policy Number
CITY	STATE	ZIP CODE	Company NAIC Number
Phoenix	AZ	85008	

SECTION D - SURVEYOR, ENGINEER, OR ARCHITECT CERTIFICATION (CONTINUED)

Copy both sides of this Elevation Certificate for (1) community official, (2) insurance agent/company, and (3) building owner.

COMMENTS

☒ Check here if attachments

SECTION E - BUILDING ELEVATION INFORMATION (SURVEY NOT REQUIRED) FOR ZONE AO AND ZONE A (WITHOUT BFE)

For Zone AO and Zone A (without BFE), complete Items E1 through E4. If the Elevation Certificate is intended for use as supporting information for a LOMA or LOMR-F, Section C must be completed.

E1. Building Diagram Number _(Select the building diagram most similar to the building for which this certificate is being completed – see pages 6 and 7. If no diagram accurately represents the building, provide a sketch or photograph.)

E2. The top of the bottom floor (including basement or enclosure) of the building is __ ft.(m) __in.(cm) ☐ above or ☐ below (check one) the highest adjacent grade. (Use natural grade, if available).

E3. For Building Diagrams 6-8 with openings (see page 7), the next higher floor or elevated floor (elevation b) of the building is __ ft.(m) __in.(cm) above the highest adjacent grade. Complete items C3.h and C3.i on front of form.

E4. The top of the platform of machinery and/or equipment servicing the building is __ ft.(m) __in.(cm) ☐ above or ☐ below (check one) the highest adjacent grade. (Use natural grade, if available).

E5. For Zone AO only: If no flood depth number is available, is the top of the bottom floor elevated in accordance with the community's floodplain management ordinance?
☐ Yes ☐ No ☐ Unknown. The local official must certify this information in Section G.

SECTION F - PROPERTY OWNER (OR OWNER'S REPRESENTATIVE) CERTIFICATION

The property owner or owner's authorized representative who completes Sections A, B, C (Items C3.h and C3.i only), and E for Zone A (without a FEMA-issued or community-issued BFE) or Zone AO must sign here. *The statements in Sections A, B, C, and E are correct to the best of my knowledge.*

PROPERTY OWNER'S OR OWNER'S AUTHORIZED REPRESENTATIVE'S NAME

ADDRESS | CITY | STATE | ZIP CODE

SIGNATURE | DATE | TELEPHONE

COMMENTS

☐ Check here if attachments

SECTION G - COMMUNITY INFORMATION (OPTIONAL)

The local official who is authorized by law or ordinance to administer the community's floodplain management ordinance can complete Sections A, B, C (or E), and G of this Elevation Certificate. Complete the applicable item(s) and sign below.

G1. ☐ The information in Section C was taken from other documentation that has been signed and embossed by a licensed surveyor, engineer, or architect who is authorized by state or local law to certify elevation information. (Indicate the source and date of the elevation data in the Comments area below.)

G2. ☐ A community official completed Section E for a building located in Zone A (without a FEMA-issued or community-issued BFE) or Zone AO.

G3. ☐ The following information (Items G4-G9) is provided for community floodplain management purposes.

G4. PERMIT NUMBER	G5. DATE PERMIT ISSUED	G6. DATE CERTIFICATE OF COMPLIANCE/OCCUPANCY ISSUED

G7. This permit has been issued for: ☐ New Construction ☐ Substantial Improvement

G8. Elevation of as-built lowest floor (including basement) of the building is: ____. __ft.(m) Datum: ____

G9. BFE or (in Zone AO) depth of flooding at the building site is: ____. __ ft.(m) Datum: ____

LOCAL OFFICIAL'S NAME | TITLE

COMMUNITY NAME | TELEPHONE

SIGNATURE | DATE

COMMENTS

☐ Check here if attachments

LOT NUMBER : 44 (SEE MAP)

DATE : 08-29-02

PLEASE INDICATE APPROX. MEASUREMENT LOCATION

ADDRESS : 1219 NORTH OAKLEAF DRIVE PHX AZ 85008

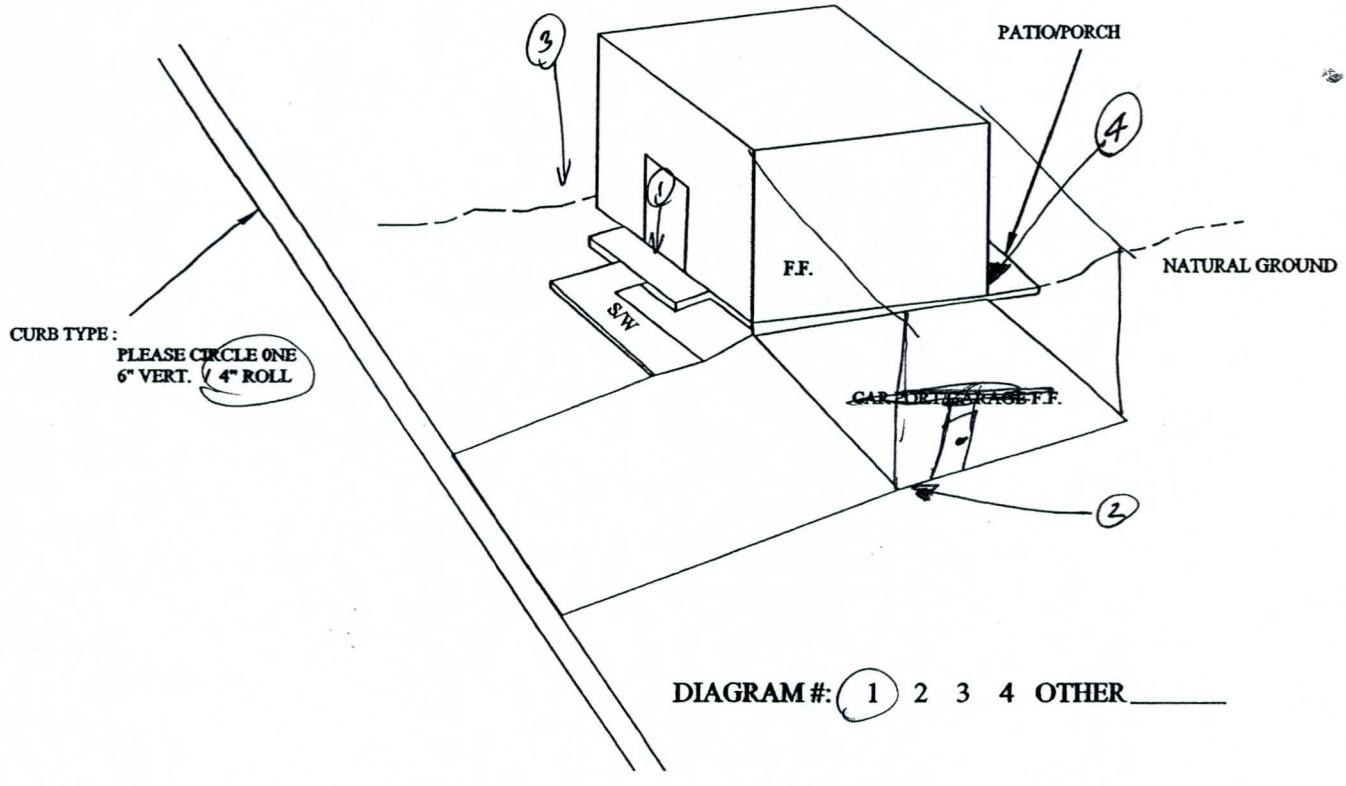

DIAGRAM #: (1) 2 3 4 OTHER_____

ELEVATIONS REQUIRED:

(1) F.F. RESIDENCE 1137.80

(2) F.F. CAR PORT/GARAGE 1136.85

(3) L.A.G. 1136.27 NATURAL GROUND

(4) H.A.G. 1136.90

L.A.G. - LOWEST ADJACENT GRADE (TO F.F.)
H.A.G. - HIGHEST ADJACENT GRADE (TO F.F.)

RELAVENT NOTES FOR ENGINEER : NO CARPORT OR GARAGE

LANDMARK ENGINEERING, INC.
7310 N. 16TH STREET SUITE 285
PHOENIX, ARIZONA 85020 (602) 861-2005

COP ELEVATION CERT

LOT : 44

FIGURE

FEDERAL EMERGENCY MANAGEMENT AGENCY
NATIONAL FLOOD INSURANCE PROGRAM

ELEVATION CERTIFICATE

O.M.B. No. 3067-0077
Expires December 31, 2005

Important: Read the instructions on pages 1 - 7.

SECTION A - PROPERTY OWNER INFORMATION

For Insurance Company Use:
Policy Number
Company NAIC Number

BUILDING OWNER'S NAME
Juarez, Paulino T. / Rosales, Noel G.

BUILDING STREET ADDRESS (Including Apt., Unit, Suite, and/or Bldg. No.) OR P.O. ROUTE AND BOX NO.
1213 N. Oakleaf Drive

CITY	STATE	ZIP CODE
Phoenix	AZ	85008

PROPERTY DESCRIPTION (Lot and Block Numbers, Tax Parcel Number, Legal Description, etc.)
Lot #67 Parcel #121-07-007

BUILDING USE (e.g., Residential, Non-residential, Addition, Accessory, etc. Use a Comments area, if necessary.)
Residential

LATITUDE/LONGITUDE (OPTIONAL) (##° - ##' - ##.##" or ##.#####°)
HORIZONTAL DATUM: ☒ NAD 1927 ☐ NAD 1983
SOURCE: ☒ GPS (Type):____ ☐ USGS Quad Map ☐ Other: ____

SECTION B - FLOOD INSURANCE RATE MAP (FIRM) INFORMATION

B1. NFIP COMMUNITY NAME & COMMUNITY NUMBER	B2. COUNTY NAME	B3. STATE
Phoenix, City of Community Number 040051	Maricopa County	AZ

B4. MAP AND PANEL NUMBER	B5. SUFFIX	B6. FIRM INDEX DATE	B7. FIRM PANEL EFFECTIVE/REVISED DATE	B8. FLOOD ZONE(S)	B9. BASE FLOOD ELEVATION(S) (Zone AO, use depth of flooding)
04013C2135	E	09/30/95	07/19/01	A	1136.83

B10. Indicate the source of the Base Flood Elevation (BFE) data or base flood depth entered in B9.
☐ FIS Profile ☐ FIRM ☐ Community Determined ☒ Other (Describe): Canal Bank

B11. Indicate the elevation datum used for the BFE in B9: ☒ NGVD 1929 ☐ NAVD 1988 ☐ Other (Describe): ____

B12. Is the building located in a Coastal Barrier Resources System (CBRS) area or Otherwise Protected Area (OPA)? ☐ Yes ☒ No Designation Date____

SECTION C - BUILDING ELEVATION INFORMATION (SURVEY REQUIRED)

C1. Building elevations are based on: ☐ Construction Drawings* ☐ Building Under Construction* ☒ Finished Construction
*A new Elevation Certificate will be required when construction of the building is complete.

C2. Building Diagram Number 1 (Select the building diagram most similar to the building for which this certificate is being completed - see pages 6 and 7. If no diagram accurately represents the building, provide a sketch or photograph.)

C3. Elevations – Zones A1-A30, AE, AH, A (with BFE), VE, V1-V30, V (with BFE), AR, AR/A, AR/AE, AR/A1-A30, AR/AH, AR/AO
Complete Items C3.-a-i below according to the building diagram specified in Item C2. State the datum used. If the datum is different from the datum used for the BFE in Section B, convert the datum to that used for the BFE. Show field measurements and datum conversion calculation. Use the space provided or the Comments area of Section D or Section G, as appropriate, to document the datum conversion.
Datum NGVD Conversion/Comments Benchmark: Brass cap in hand hole; elevation =1138.77 ft. @ centerline intersection o f 32nd Street & McDowell Road
Elevation reference mark used C.O. Phoenix Does the elevation reference mark used appear on the FIRM? ☐ Yes ☒ No

- o a) Top of bottom floor (including basement or enclosure) 1137. 12 ft.(m)
- o b) Top of next higher floor ____. __ft.(m)
- o c) Bottom of lowest horizontal structural member (V zones only) ____. __ft.(m)
- o d) Attached garage (top of slab) 1136. 80 ft.(m)
- o e) Lowest elevation of machinery and/or equipment servicing the building (Describe in a Comments area) ____. __ft.(m)
- o f) Lowest adjacent (finished) grade (LAG) 1136 . 30 ft.(m)
- o g) Highest adjacent (finished) grade (HAG) 1137. 00 ft.(m)
- o h) No. of permanent openings (flood vents) within 1 ft. above adjacent grade ____
- o i) Total area of all permanent openings (flood vents) in C3.h _____sq. in. (sq. cm)

License Number, Embossed Seal, Signature, and Date

Registered Professional Engineer (Civil)
CERTIFICATE NO.
12890
JAMES D.
LEMON
Date Signed 6/16/03
ARIZONA, U.S.A.

SECTION D - SURVEYOR, ENGINEER, OR ARCHITECT CERTIFICATION

This certification is to be signed and sealed by a land surveyor, engineer, or architect authorized by law to certify elevation information.
I certify that the information in Sections A, B, and C on this certificate represents my best efforts to interpret the data available.
I understand that any false statement may be punishable by fine or imprisonment under 18 U.S. Code, Section 1001.

CERTIFIER'S NAME	LICENSE NUMBER
James D. Lemon, P.E., R.L.S.	# 12890

TITLE	COMPANY NAME
President	Landmark Engineering, Inc.

ADDRESS	CITY	STATE	ZIP CODE
7310 North 16th Street, Suite #285	Phoenix	AZ	85020

SIGNATURE	DATE	TELEPHONE
	6/16/03	602.861.2005

IMPORTANT: In these spaces, copy the corresponding information from Section A.

BUILDING STREET ADDRESS (Including Apt., Unit, Suite, and/or Bldg. No.) OR P.O. ROUTE AND BOX NO.			For Insurance Company Use:
1213 N. Oakleaf Drive			Policy Number
CITY	STATE	ZIP CODE	Company NAIC Number
Phoenix	AZ	85008	

SECTION D - SURVEYOR, ENGINEER, OR ARCHITECT CERTIFICATION (CONTINUED)

Copy both sides of this Elevation Certificate for (1) community official, (2) insurance agent/company, and (3) building owner.

COMMENTS

☒ Check here if attachments

SECTION E - BUILDING ELEVATION INFORMATION (SURVEY NOT REQUIRED) FOR ZONE AO AND ZONE A (WITHOUT BFE)

For Zone AO and Zone A (without BFE), complete Items E1 through E4. If the Elevation Certificate is intended for use as supporting information for a LOMA or LOMR-F, Section C must be completed.

E1. Building Diagram Number _(Select the building diagram most similar to the building for which this certificate is being completed – see pages 6 and 7. If no diagram accurately represents the building, provide a sketch or photograph.)

E2. The top of the bottom floor (including basement or enclosure) of the building is __ ft.(m) __in.(cm) ☐ above or ☐ below (check one) the highest adjacent grade. (Use natural grade, if available).

E3. For Building Diagrams 6-8 with openings (see page 7), the next higher floor or elevated floor (elevation b) of the building is __ ft.(m) __in.(cm) above the highest adjacent grade. Complete items C3.h and C3.i on front of form.

E4. The top of the platform of machinery and/or equipment servicing the building is __ ft.(m) __in.(cm) ☐ above or ☐ below (check one) the highest adjacent grade. (Use natural grade, if available).

E5. For Zone AO only: If no flood depth number is available, is the top of the bottom floor elevated in accordance with the community's floodplain management ordinance?
☐ Yes ☐ No ☐ Unknown. The local official must certify this information in Section G.

SECTION F - PROPERTY OWNER (OR OWNER'S REPRESENTATIVE) CERTIFICATION

The property owner or owner's authorized representative who completes Sections A, B, C (Items C3.h and C3.i only), and E for Zone A (without a FEMA-issued or community-issued BFE) or Zone AO must sign here. *The statements in Sections A, B, C, and E are correct to the best of my knowledge.*

PROPERTY OWNER'S OR OWNER'S AUTHORIZED REPRESENTATIVE'S NAME

ADDRESS | CITY | STATE | ZIP CODE

SIGNATURE | DATE | TELEPHONE

COMMENTS

☐ Check here if attachments

SECTION G - COMMUNITY INFORMATION (OPTIONAL)

The local official who is authorized by law or ordinance to administer the community's floodplain management ordinance can complete Sections A, B, C (or E), and G of this Elevation Certificate. Complete the applicable item(s) and sign below.

G1. ☐ The information in Section C was taken from other documentation that has been signed and embossed by a licensed surveyor, engineer, or architect who is authorized by state or local law to certify elevation information. (Indicate the source and date of the elevation data in the Comments area below.)

G2. ☐ A community official completed Section E for a building located in Zone A (without a FEMA-issued or community-issued BFE) or Zone AO.

G3. ☐ The following information (Items G4-G9) is provided for community floodplain management purposes.

G4. PERMIT NUMBER	G5. DATE PERMIT ISSUED	G6. DATE CERTIFICATE OF COMPLIANCE/OCCUPANCY ISSUED

G7. This permit has been issued for: ☐ New Construction ☐ Substantial Improvement

G8. Elevation of as-built lowest floor (including basement) of the building is: ____. __ft.(m) Datum: _____

G9. BFE or (in Zone AO) depth of flooding at the building site is: _____. __ ft.(m) Datum: _____

LOCAL OFFICIAL'S NAME | TITLE

COMMUNITY NAME | TELEPHONE

SIGNATURE | DATE

COMMENTS

☐ Check here if attachments

LOT NUMBER : 67 (SEE MAP)

DATE : 08-29-02

PLEASE INDICATE APPROX. MEASUREMENT LOCATION

ADDRESS : 1213 NORTH OAKLEAF DRIVE PHX AZ 85008

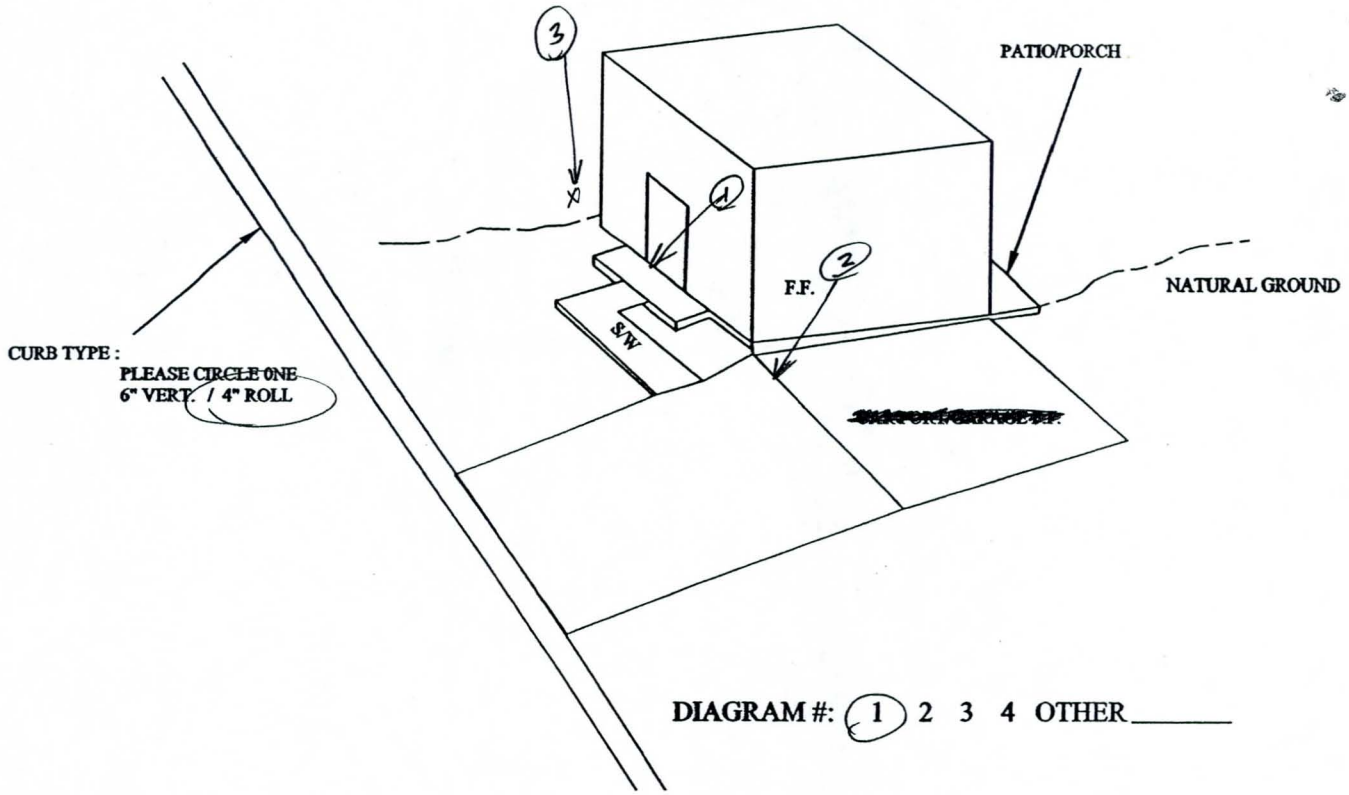

DIAGRAM #: (1) 2 3 4 OTHER _____

ELEVATIONS REQUIRED:

(1) F.F. RESIDENCE	1137.12
(2) F.F. CAR PORT/GARAGE	1136.80
(3) L.A.G.	1136.30
(4) H.A.G.	1137.00

L.A.G. - LOWEST ADJACENT GRADE (TO F.F.)
H.A.G. - HIGHEST ADJACENT GRADE (TO F.F.)

RELAVENT NOTES FOR ENGINEER : _____

LANDMARK ENGINEERING, INC.
7310 N. 16TH STREET SUITE 285
PHOENIX, ARIZONA 85020 (602) 861-2005

COP ELEVATION CERT

LOT : 67

FIGURE

FEDERAL EMERGENCY MANAGEMENT AGENCY
NATIONAL FLOOD INSURANCE PROGRAM

ELEVATION CERTIFICATE

O.M.B. No. 3067-0077
Expires December 31, 2005

Important: Read the instructions on pages 1 - 7.

SECTION A - PROPERTY OWNER INFORMATION

For Insurance Company Use:
Policy Number
Company NAIC Number

BUILDING OWNER'S NAME
Chavarria, Gilberto

BUILDING STREET ADDRESS (Including Apt., Unit, Suite, and/or Bldg. No.) OR P.O. ROUTE AND BOX NO.
1209 N. Oakleaf Drive

CITY	STATE	ZIP CODE
Phoenix	AZ	85008

PROPERTY DESCRIPTION (Lot and Block Numbers, Tax Parcel Number, Legal Description, etc.)
Lot #68 Pacel #121-07-008

BUILDING USE (e.g., Residential, Non-residential, Addition, Accessory, etc. Use a Comments area, if necessary.)
Residential

LATITUDE/LONGITUDE (OPTIONAL) (##° - ##' - ##.##" or ##.#####°)
HORIZONTAL DATUM: ☒ NAD 1927 ☐ NAD 1983
SOURCE: ☒ GPS (Type):____ ☐ USGS Quad Map ☐ Other: _____

SECTION B - FLOOD INSURANCE RATE MAP (FIRM) INFORMATION

B1. NFIP COMMUNITY NAME & COMMUNITY NUMBER	B2. COUNTY NAME	B3. STATE
Phoenix, City of Community Number 040051	Maricopa County	AZ

B4. MAP AND PANEL NUMBER	B5. SUFFIX	B6. FIRM INDEX DATE	B7. FIRM PANEL EFFECTIVE/REVISED DATE	B8. FLOOD ZONE(S)	B9. BASE FLOOD ELEVATION(S) (Zone AO, use depth of flooding)
04013C2135	E	09/30/95	07/19/01	A	1136.87

B10. Indicate the source of the Base Flood Elevation (BFE) data or base flood depth entered in B9.
☐ FIS Profile ☐ FIRM ☐ Community Determined ☒ Other (Describe): Canal Bank

B11. Indicate the elevation datum used for the BFE in B9: ☒ NGVD 1929 ☐ NAVD 1988 ☐ Other (Describe): ____

B12. Is the building located in a Coastal Barrier Resources System (CBRS) area or Otherwise Protected Area (OPA)? ☐ Yes ☒ No Designation Date____

SECTION C - BUILDING ELEVATION INFORMATION (SURVEY REQUIRED)

C1. Building elevations are based on: ☐ Construction Drawings* ☐ Building Under Construction* ☒ Finished Construction
*A new Elevation Certificate will be required when construction of the building is complete.

C2. Building Diagram Number 1 (Select the building diagram most similar to the building for which this certificate is being completed - see pages 6 and 7. If no diagram accurately represents the building, provide a sketch or photograph.)

C3. Elevations – Zones A1-A30, AE, AH, A (with BFE), VE, V1-V30, V (with BFE), AR, AR/A, AR/AE, AR/A1-A30, AR/AH, AR/AO
Complete Items C3.-a-i below according to the building diagram specified in Item C2. State the datum used. If the datum is different from the datum used for the BFE in Section B, convert the datum to that used for the BFE. Show field measurements and datum conversion calculation. Use the space provided or the Comments area of Section D or Section G, as appropriate, to document the datum conversion.
Datum NGVD Conversion/Comments Benchmark: Brass cap in hand hole; elevation =1138.77 ft. @ centerline intersection o f 32nd Street & McDowell Road
Elevation reference mark used C.O. Phoenix Does the elevation reference mark used appear on the FIRM? ☐ Yes ☒ No

- o a) Top of bottom floor (including basement or enclosure) 1137. 17 ft.(m)
- o b) Top of next higher floor ____. __ft.(m)
- o c) Bottom of lowest horizontal structural member (V zones only) ____. __ft.(m)
- o d) Attached garage (top of slab) 1136. 88 ft.(m)
- o e) Lowest elevation of machinery and/or equipment servicing the building (Describe in a Comments area) ____. __ft.(m)
- o f) Lowest adjacent (finished) grade (LAG) 1136 . 59 ft.(m)
- o g) Highest adjacent (finished) grade (HAG) 1136. 77 ft.(m)
- o h) No. of permanent openings (flood vents) within 1 ft. above adjacent grade _____
- o i) Total area of all permanent openings (flood vents) in C3.h _____sq. in. (sq. cm)

License Number, Embossed Seal, Signature, and Date

Registered Professional Engineer (Civil) CERTIFICATE NO. 12890 JAMES D. LEMON Date Signed 6/16/03 ARIZONA, U.S.A.

SECTION D - SURVEYOR, ENGINEER, OR ARCHITECT CERTIFICATION

This certification is to be signed and sealed by a land surveyor, engineer, or architect authorized by law to certify elevation information.
I certify that the information in Sections A, B, and C on this certificate represents my best efforts to interpret the data available.
I understand that any false statement may be punishable by fine or imprisonment under 18 U.S. Code, Section 1001.

CERTIFIER'S NAME	LICENSE NUMBER
James D. Lemon, P.E., R.L.S.	# 12890

TITLE	COMPANY NAME
President	Landmark Engineering, Inc.

ADDRESS	CITY	STATE	ZIP CODE
7310 North 16th Street, Suite #285	Phoenix	AZ	85020

SIGNATURE	DATE	TELEPHONE
James D. Lemon	6/16/03	602.861.2005

IMPORTANT: In these spaces, copy the corresponding information from Section A.

BUILDING STREET ADDRESS (Including Apt., Unit, Suite, and/or Bldg. No.) OR P.O. ROUTE AND BOX NO.			For Insurance Company Use:
1209 N. Oakleaf Drive			Policy Number
CITY	STATE	ZIP CODE	Company NAIC Number
Phoenix	AZ	85008	

SECTION D - SURVEYOR, ENGINEER, OR ARCHITECT CERTIFICATION (CONTINUED)

Copy both sides of this Elevation Certificate for (1) community official, (2) insurance agent/company, and (3) building owner.

COMMENTS

☒ Check here if attachments

SECTION E - BUILDING ELEVATION INFORMATION (SURVEY NOT REQUIRED) FOR ZONE AO AND ZONE A (WITHOUT BFE)

For Zone AO and Zone A (without BFE), complete Items E1 through E4. If the Elevation Certificate is intended for use as supporting information for a LOMA or LOMR-F, Section C must be completed.

E1. Building Diagram Number _(Select the building diagram most similar to the building for which this certificate is being completed – see pages 6 and 7. If no diagram accurately represents the building, provide a sketch or photograph.)

E2. The top of the bottom floor (including basement or enclosure) of the building is __ ft.(m) __in.(cm) ☐ above or ☐ below (check one) the highest adjacent grade. (Use natural grade, if available).

E3. For Building Diagrams 6-8 with openings (see page 7), the next higher floor or elevated floor (elevation b) of the building is __ ft.(m) __in.(cm) above the highest adjacent grade. Complete items C3.h and C3.i on front of form.

E4. The top of the platform of machinery and/or equipment servicing the building is __ ft.(m) __in.(cm) ☐ above or ☐ below (check one) the highest adjacent grade. (Use natural grade, if available).

E5. For Zone AO only: If no flood depth number is available, is the top of the bottom floor elevated in accordance with the community's floodplain management ordinance?
☐ Yes ☐ No ☐ Unknown. The local official must certify this information in Section G.

SECTION F - PROPERTY OWNER (OR OWNER'S REPRESENTATIVE) CERTIFICATION

The property owner or owner's authorized representative who completes Sections A, B, C (Items C3.h and C3.i only), and E for Zone A (without a FEMA-issued or community-issued BFE) or Zone AO must sign here. *The statements in Sections A, B, C, and E are correct to the best of my knowledge.*

PROPERTY OWNER'S OR OWNER'S AUTHORIZED REPRESENTATIVE'S NAME

ADDRESS | CITY | STATE | ZIP CODE

SIGNATURE | DATE | TELEPHONE

COMMENTS

☐ Check here if attachments

SECTION G - COMMUNITY INFORMATION (OPTIONAL)

The local official who is authorized by law or ordinance to administer the community's floodplain management ordinance can complete Sections A, B, C (or E), and G of this Elevation Certificate. Complete the applicable item(s) and sign below.

G1. ☐ The information in Section C was taken from other documentation that has been signed and embossed by a licensed surveyor, engineer, or architect who is authorized by state or local law to certify elevation information. (Indicate the source and date of the elevation data in the Comments area below.)

G2. ☐ A community official completed Section E for a building located in Zone A (without a FEMA-issued or community-issued BFE) or Zone AO.

G3. ☐ The following information (Items G4-G9) is provided for community floodplain management purposes.

G4. PERMIT NUMBER	G5. DATE PERMIT ISSUED	G6. DATE CERTIFICATE OF COMPLIANCE/OCCUPANCY ISSUED

G7. This permit has been issued for: ☐ New Construction ☐ Substantial Improvement

G8. Elevation of as-built lowest floor (including basement) of the building is: ____. __ft.(m) Datum: _____

G9. BFE or (in Zone AO) depth of flooding at the building site is: ____. __ft.(m) Datum: _____

LOCAL OFFICIAL'S NAME | TITLE

COMMUNITY NAME | TELEPHONE

SIGNATURE | DATE

COMMENTS

☐ Check here if attachments

LOT NUMBER : 68 (SEE MAP)

DATE : 08-29-02

PLEASE INDICATE APPROX. MEASUREMENT LOCATION

ADDRESS : 1209 NORTH OAKLEAF DRIVE PHX AZ 85008

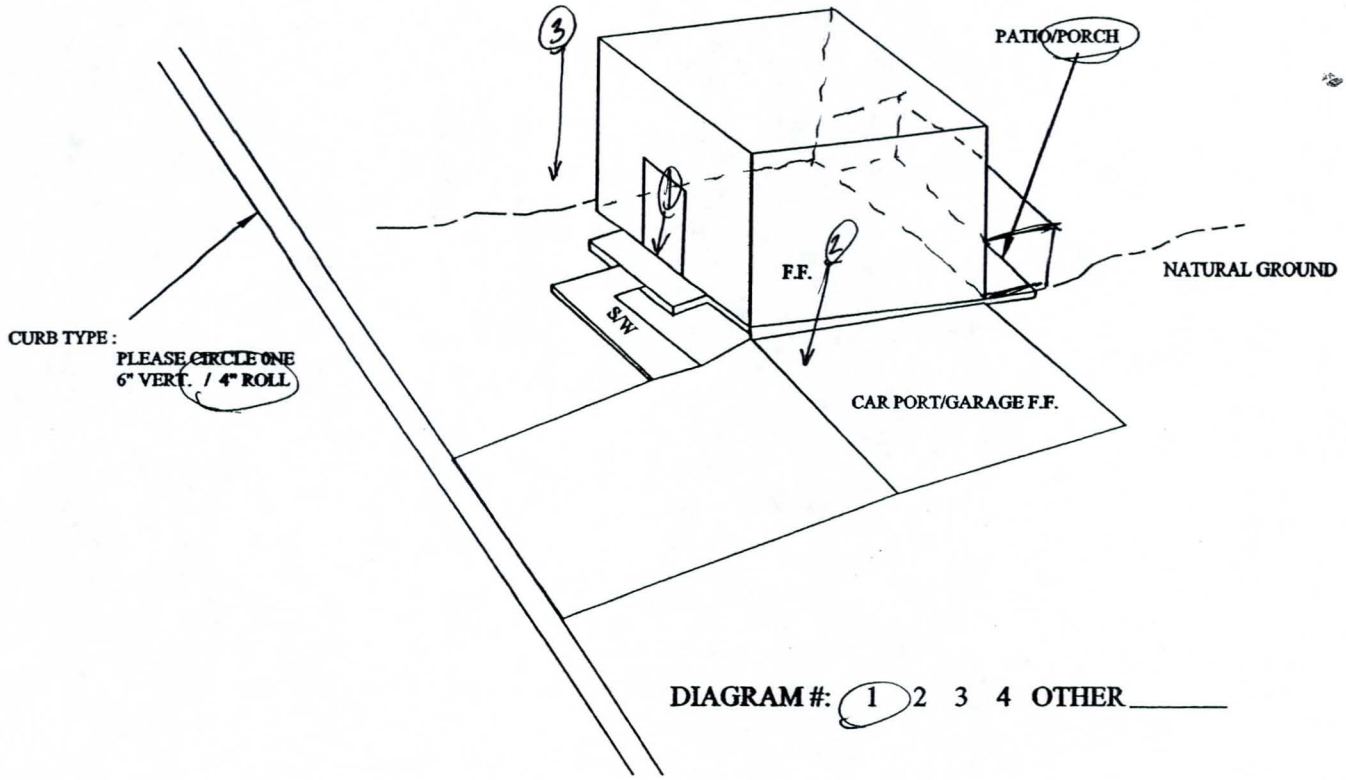

DIAGRAM #: 1 2 3 4 OTHER_____

ELEVATIONS REQUIRED:

1 F.F. RESIDENCE	1137.17
2 F.F. CAR PORT/GARAGE	1136.88
3 L.A.G.	1136.59
4 H.A.G.	1136.77

L.A.G. - LOWEST ADJACENT GRADE (TO F.F.)
H.A.G. - HIGHEST ADJACENT GRADE (TO F.F.)

RELAVENT NOTES FOR ENGINEER : * NO GRASS IN BACKYARD. VARIOUS HOLES DUG OUT FROM DOGS

LANDMARK ENGINEERING, INC.
7310 N. 16TH STREET SUITE 285
PHOENIX, ARIZONA 85020 (602) 861-2005

COP ELEVATION CERT

LOT : 68

FIGURE

FEDERAL EMERGENCY MANAGEMENT AGENCY
NATIONAL FLOOD INSURANCE PROGRAM

ELEVATION CERTIFICATE

O.M.B. No. 3067-0077
Expires December 31, 2005

Important: Read the instructions on pages 1 - 7.

SECTION A - PROPERTY OWNER INFORMATION

For Insurance Company Use:
Policy Number
Company NAIC Number

BUILDING OWNER'S NAME
Cota, Louis C. / Hortencia H.

BUILDING STREET ADDRESS (Including Apt., Unit, Suite, and/or Bldg. No.) OR P.O. ROUTE AND BOX NO.
1201 N. 33rd Street

CITY	STATE	ZIP CODE
Phoenix	AZ	85008

PROPERTY DESCRIPTION (Lot and Block Numbers, Tax Parcel Number, Legal Description, etc.)
Lot #77 Pacel #121-07-018

BUILDING USE (e.g., Residential, Non-residential, Addition, Accessory, etc. Use a Comments area, if necessary.)
Residential

LATITUDE/LONGITUDE (OPTIONAL) (##° - ##' - ##.##" or ##.#####°)
HORIZONTAL DATUM: ☒ NAD 1927 ☐ NAD 1983
SOURCE: ☒ GPS (Type):____ ☐ USGS Quad Map ☐ Other: ____

SECTION B - FLOOD INSURANCE RATE MAP (FIRM) INFORMATION

B1. NFIP COMMUNITY NAME & COMMUNITY NUMBER	B2. COUNTY NAME	B3. STATE
Phoenix, City of Community Number 040051	Maricopa County	AZ

B4. MAP AND PANEL NUMBER	B5. SUFFIX	B6. FIRM INDEX DATE	B7. FIRM PANEL EFFECTIVE/REVISED DATE	B8. FLOOD ZONE(S)	B9. BASE FLOOD ELEVATION(S) (Zone AO, use depth of flooding)
04013C2135	E	09/30/95	07/19/01	A	1137.19

B10. Indicate the source of the Base Flood Elevation (BFE) data or base flood depth entered in B9.
☐ FIS Profile ☐ FIRM ☐ Community Determined ☒ Other (Describe): Canal Bank

B11. Indicate the elevation datum used for the BFE in B9: ☒ NGVD 1929 ☐ NAVD 1988 ☐ Other (Describe): ____

B12. Is the building located in a Coastal Barrier Resources System (CBRS) area or Otherwise Protected Area (OPA)? ☐ Yes ☒ No Designation Date____

SECTION C - BUILDING ELEVATION INFORMATION (SURVEY REQUIRED)

C1. Building elevations are based on: ☐ Construction Drawings* ☐ Building Under Construction* ☒ Finished Construction

*A new Elevation Certificate will be required when construction of the building is complete.

C2. Building Diagram Number 1 (Select the building diagram most similar to the building for which this certificate is being completed - see pages 6 and 7. If no diagram accurately represents the building, provide a sketch or photograph.)

C3. Elevations – Zones A1-A30, AE, AH, A (with BFE), VE, V1-V30, V (with BFE), AR, AR/A, AR/AE, AR/A1-A30, AR/AH, AR/AO

Complete Items C3.-a-i below according to the building diagram specified in Item C2. State the datum used. If the datum is different from the datum used for the BFE in Section B, convert the datum to that used for the BFE. Show field measurements and datum conversion calculation. Use the space provided or the Comments area of Section D or Section G, as appropriate, to document the datum conversion.

Datum NGVD Conversion/Comments Benchmark: Brass cap in hand hole; elevation =1138.77 ft. @ centerline intersection o f 32nd Street & McDowell Road

Elevation reference mark used C.O. Phoenix Does the elevation reference mark used appear on the FIRM? ☐ Yes ☒ No

- o a) Top of bottom floor (including basement or enclosure) 1137. 42 ft.(m)
- o b) Top of next higher floor ____. __ft.(m)
- o c) Bottom of lowest horizontal structural member (V zones only) ____. __ft.(m)
- o d) Attached garage (top of slab) 1137. 17 ft.(m)
- o e) Lowest elevation of machinery and/or equipment servicing the building (Describe in a Comments area) ____. __ft.(m)
- o f) Lowest adjacent (finished) grade (LAG) 1136. 45 ft.(m)
- o g) Highest adjacent (finished) grade (HAG) N/A __ft.(m)
- o h) No. of permanent openings (flood vents) within 1 ft. above adjacent grade ____
- o i) Total area of all permanent openings (flood vents) in C3.h ____sq. in. (sq. cm)

License Number, Embossed Seal, Signature, and Date

Registered Professional Engineer (Civil) CERTIFICATE NO. 12890 JAMES D. LEMON Date Signed 6/16/03 ARIZONA, U.S.A.

SECTION D - SURVEYOR, ENGINEER, OR ARCHITECT CERTIFICATION

This certification is to be signed and sealed by a land surveyor, engineer, or architect authorized by law to certify elevation information.
I certify that the information in Sections A, B, and C on this certificate represents my best efforts to interpret the data available.
I understand that any false statement may be punishable by fine or imprisonment under 18 U.S. Code, Section 1001.

CERTIFIER'S NAME	LICENSE NUMBER		
James D. Lemon, P.E., R.L.S.	# 12890		
TITLE	COMPANY NAME		
President	Landmark Engineering, Inc.		
ADDRESS	CITY	STATE	ZIP CODE
7310 North 16th Street, Suite #285	Phoenix	AZ	85020
SIGNATURE	DATE	TELEPHONE	
	6/16/03	602.861.2005	

IMPORTANT: In these spaces, copy the corresponding information from Section A.			For Insurance Company Use:
BUILDING STREET ADDRESS (Including Apt., Unit, Suite, and/or Bldg. No.) OR P.O. ROUTE AND BOX NO. 1201 N. 33rd Street			Policy Number
CITY Phoenix	STATE AZ	ZIP CODE 85008	Company NAIC Number

SECTION D - SURVEYOR, ENGINEER, OR ARCHITECT CERTIFICATION (CONTINUED)

Copy both sides of this Elevation Certificate for (1) community official, (2) insurance agent/company, and (3) building owner.

COMMENTS
Homeowner was not home at time of survey to allow access into the backyard. Landmark Engineering, Inc. was unable to complete the survey.

☒ Check here if attachments

SECTION E - BUILDING ELEVATION INFORMATION (SURVEY NOT REQUIRED) FOR ZONE AO AND ZONE A (WITHOUT BFE)

For Zone AO and Zone A (without BFE), complete Items E1 through E4. If the Elevation Certificate is intended for use as supporting information for a LOMA or LOMR-F, Section C must be completed.

E1. Building Diagram Number _(Select the building diagram most similar to the building for which this certificate is being completed – see pages 6 and 7. If no diagram accurately represents the building, provide a sketch or photograph.)

E2. The top of the bottom floor (including basement or enclosure) of the building is __ ft.(m) __in.(cm) ☐ above or ☐ below (check one) the highest adjacent grade. (Use natural grade, if available).

E3. For Building Diagrams 6-8 with openings (see page 7), the next higher floor or elevated floor (elevation b) of the building is __ ft.(m) __in.(cm) above the highest adjacent grade. Complete items C3.h and C3.i on front of form.

E4. The top of the platform of machinery and/or equipment servicing the building is __ ft.(m) __in.(cm) ☐ above or ☐ below (check one) the highest adjacent grade. (Use natural grade, if available).

E5. For Zone AO only: If no flood depth number is available, is the top of the bottom floor elevated in accordance with the community's floodplain management ordinance?
☐ Yes ☐ No ☐ Unknown. The local official must certify this information in Section G.

SECTION F - PROPERTY OWNER (OR OWNER'S REPRESENTATIVE) CERTIFICATION

The property owner or owner's authorized representative who completes Sections A, B, C (Items C3.h and C3.i only), and E for Zone A (without a FEMA-issued or community-issued BFE) or Zone AO must sign here. *The statements in Sections A, B, C, and E are correct to the best of my knowledge.*

PROPERTY OWNER'S OR OWNER'S AUTHORIZED REPRESENTATIVE'S NAME

ADDRESS | CITY | STATE | ZIP CODE

SIGNATURE | DATE | TELEPHONE

COMMENTS

☐ Check here if attachments

SECTION G - COMMUNITY INFORMATION (OPTIONAL)

The local official who is authorized by law or ordinance to administer the community's floodplain management ordinance can complete Sections A, B, C (or E), and G of this Elevation Certificate. Complete the applicable item(s) and sign below.

G1. ☐ The information in Section C was taken from other documentation that has been signed and embossed by a licensed surveyor, engineer, or architect who is authorized by state or local law to certify elevation information. (Indicate the source and date of the elevation data in the Comments area below.)

G2. ☐ A community official completed Section E for a building located in Zone A (without a FEMA-issued or community-issued BFE) or Zone AO.

G3. ☐ The following information (Items G4-G9) is provided for community floodplain management purposes.

G4. PERMIT NUMBER	G5. DATE PERMIT ISSUED	G6. DATE CERTIFICATE OF COMPLIANCE/OCCUPANCY ISSUED

G7. This permit has been issued for: ☐ New Construction ☐ Substantial Improvement

G8. Elevation of as-built lowest floor (including basement) of the building is: ____. __ft.(m) Datum: _____

G9. BFE or (in Zone AO) depth of flooding at the building site is: ____. __ft.(m) Datum: _____

LOCAL OFFICIAL'S NAME | TITLE

COMMUNITY NAME | TELEPHONE

SIGNATURE | DATE

COMMENTS

☐ Check here if attachments

LOT NUMBER : 77 (SEE MAP)

DATE : 08-29-02

PLEASE INDICATE APPROX. MEASUREMENT LOCATION

ADDRESS : 1149 EAST OAKLEAF DRIVE PHX AZ 85008

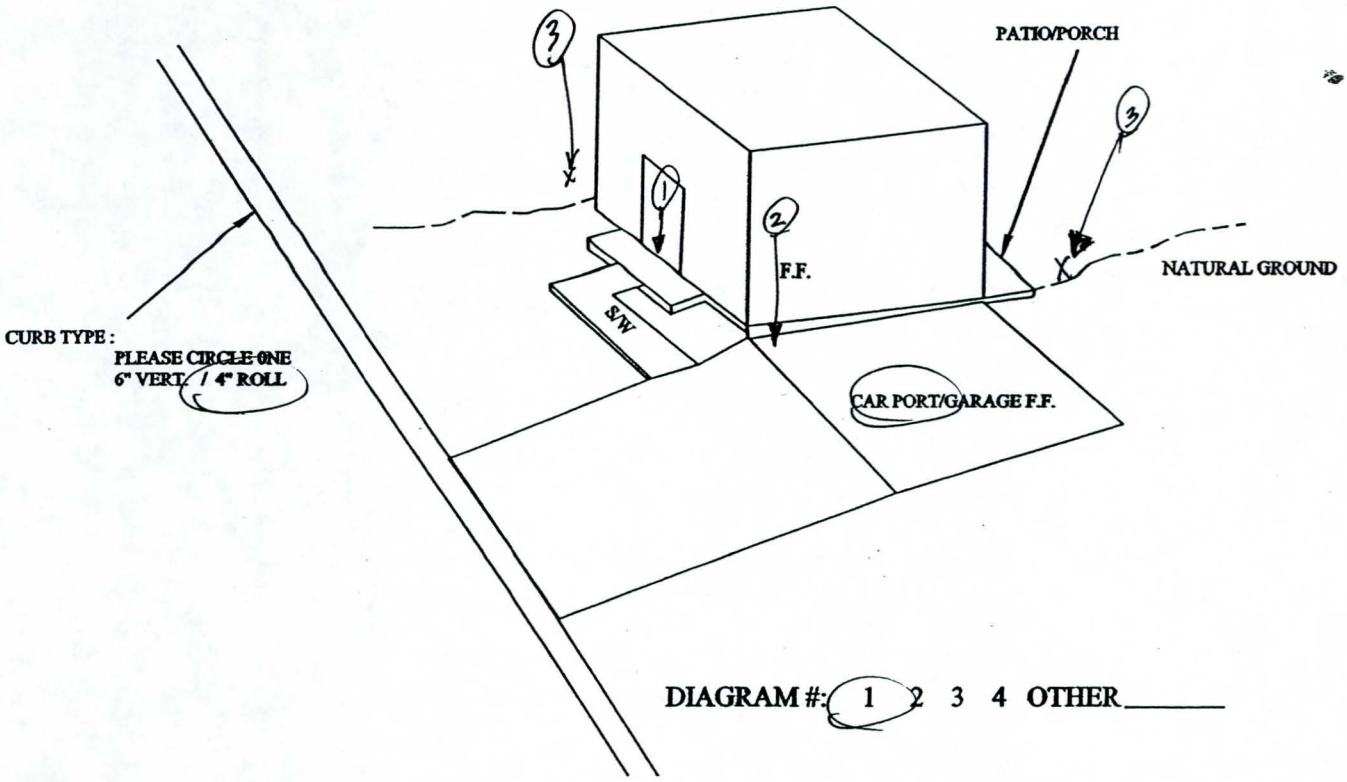

DIAGRAM #: 1 2 3 4 OTHER_____

ELEVATIONS REQUIRED:

① F.F. RESIDENCE	1137.42
② F.F. CAR PORT/GARAGE	1137.17
③ L.A.G.	1136.45*
④ H.A.G.	

NOTE: HOMEOWNER HAS BACKYARD FENCE LOCKED & WAS NOT HOME AT TIME OF SURVEY

L.A.G. - LOWEST ADJACENT GRADE (TO F.F.)
H.A.G. - HIGHEST ADJACENT GRADE (TO F.F.)

RELAVENT NOTES FOR ENGINEER: *ELEVATION FOR L.A.G WAS TAKEN WHILE TURNED INTO NEIGHBORS YARD.
*SMALL FENCE DIVIDES RESIDENCE & NEIGHBORS TO SSE

LANDMARK ENGINEERING, INC.
7310 N. 16TH STREET SUITE 285
PHOENIX, ARIZONA 85020 (602) 861-2005

COP ELEVATION CERT

LOT : 77

FIGURE

FEDERAL EMERGENCY MANAGEMENT AGENCY
NATIONAL FLOOD INSURANCE PROGRAM

ELEVATION CERTIFICATE

O.M.B. No. 3067-0077
Expires December 31, 2005

Important: Read the instructions on pages 1 - 7.

SECTION A - PROPERTY OWNER INFORMATION

For Insurance Company Use:
Policy Number
Company NAIC Number

BUILDING OWNER'S NAME
Lopez, Robert N.

BUILDING STREET ADDRESS (Including Apt., Unit, Suite, and/or Bldg. No.) OR P.O. ROUTE AND BOX NO.
1201 N. Oakleaf Drive

CITY	STATE	ZIP CODE
Phoenix	AZ	85008

PROPERTY DESCRIPTION (Lot and Block Numbers, Tax Parcel Number, Legal Description, etc.)
Lot #69 Pacel #121-07-009

BUILDING USE (e.g., Residential, Non-residential, Addition, Accessory, etc. Use a Comments area, if necessary.)
Residential

LATITUDE/LONGITUDE (OPTIONAL) (##° - ##' - ##.##" or ##.#####°)
HORIZONTAL DATUM: ☒ NAD 1927 ☐ NAD 1983
SOURCE: ☒ GPS (Type):____ ☐ USGS Quad Map ☐ Other: ____

SECTION B - FLOOD INSURANCE RATE MAP (FIRM) INFORMATION

B1. NFIP COMMUNITY NAME & COMMUNITY NUMBER	B2. COUNTY NAME	B3. STATE
Phoenix, City of Community Number 040051	Maricopa County	AZ

B4. MAP AND PANEL NUMBER	B5. SUFFIX	B6. FIRM INDEX DATE	B7. FIRM PANEL EFFECTIVE/REVISED DATE	B8. FLOOD ZONE(S)	B9. BASE FLOOD ELEVATION(S) (Zone AO, use depth of flooding)
04013C2135	E	09/30/95	07/19/01	A	1137.02

B10. Indicate the source of the Base Flood Elevation (BFE) data or base flood depth entered in B9.
☐ FIS Profile ☐ FIRM ☐ Community Determined ☒ Other (Describe): Canal Bank

B11. Indicate the elevation datum used for the BFE in B9: ☒ NGVD 1929 ☐ NAVD 1988 ☐ Other (Describe): ____

B12. Is the building located in a Coastal Barrier Resources System (CBRS) area or Otherwise Protected Area (OPA)? ☐ Yes ☒ No Designation Date____

SECTION C - BUILDING ELEVATION INFORMATION (SURVEY REQUIRED)

C1. Building elevations are based on: ☐ Construction Drawings* ☐ Building Under Construction* ☒ Finished Construction
*A new Elevation Certificate will be required when construction of the building is complete.

C2. Building Diagram Number 1 (Select the building diagram most similar to the building for which this certificate is being completed - see pages 6 and 7. If no diagram accurately represents the building, provide a sketch or photograph.)

C3. Elevations – Zones A1-A30, AE, AH, A (with BFE), VE, V1-V30, V (with BFE), AR, AR/A, AR/AE, AR/A1-A30, AR/AH, AR/AO
Complete Items C3.-a-i below according to the building diagram specified in Item C2. State the datum used. If the datum is different from the datum used for the BFE in Section B, convert the datum to that used for the BFE. Show field measurements and datum conversion calculation. Use the space provided or the Comments area of Section D or Section G, as appropriate, to document the datum conversion.
Datum NGVD Conversion/Comments Benchmark: Brass cap in hand hole; elevation =1138.77 ft. @ centerline intersection o f 32nd Street & McDowell Road
Elevation reference mark used C.O. Phoenix Does the elevation reference mark used appear on the FIRM? ☐ Yes ☒ No

- o a) Top of bottom floor (including basement or enclosure) 1137. 21 ft.(m)
- o b) Top of next higher floor ____. __ft.(m)
- o c) Bottom of lowest horizontal structural member (V zones only) ____. __ft.(m)
- o d) Attached garage (top of slab) 1136. 46 ft.(m)
- o e) Lowest elevation of machinery and/or equipment servicing the building (Describe in a Comments area) ____. __ft.(m)
- o f) Lowest adjacent (finished) grade (LAG) 1135 . 96 ft.(m)
- o g) Highest adjacent (finished) grade (HAG) 1136. 46 ft.(m)
- o h) No. of permanent openings (flood vents) within 1 ft. above adjacent grade ____
- o i) Total area of all permanent openings (flood vents) in C3.h _____sq. in. (sq. cm)

License Number, Embossed Seal, Signature, and Date

Registered Professional Engineer (Civil) CERTIFICATE NO. 12890 JAMES D. LEMON Date Signed 6/16/03 ARIZONA, U.S.A.

SECTION D - SURVEYOR, ENGINEER, OR ARCHITECT CERTIFICATION

This certification is to be signed and sealed by a land surveyor, engineer, or architect authorized by law to certify elevation information.
I certify that the information in Sections A, B, and C on this certificate represents my best efforts to interpret the data available.
I understand that any false statement may be punishable by fine or imprisonment under 18 U.S. Code, Section 1001.

CERTIFIER'S NAME	LICENSE NUMBER		
James D. Lemon, P.E., R.L.S.	# 12890		
TITLE	COMPANY NAME		
President	Landmark Engineering, Inc.		
ADDRESS	CITY	STATE	ZIP CODE
7310 North 16th Street, Suite #285	Phoenix	AZ	85020
SIGNATURE	DATE	TELEPHONE	
	6/16/03	602.861.2005	

IMPORTANT: In these spaces, copy the corresponding information from Section A.

BUILDING STREET ADDRESS (Including Apt., Unit, Suite, and/or Bldg. No.) OR P.O. ROUTE AND BOX NO.			For Insurance Company Use:
1201 N. Oakleaf Drive			Policy Number
CITY	STATE	ZIP CODE	Company NAIC Number
Phoenix	AZ	85008	

SECTION D - SURVEYOR, ENGINEER, OR ARCHITECT CERTIFICATION (CONTINUED)

Copy both sides of this Elevation Certificate for (1) community official, (2) insurance agent/company, and (3) building owner.

COMMENTS

☒ Check here if attachments

SECTION E - BUILDING ELEVATION INFORMATION (SURVEY NOT REQUIRED) FOR ZONE AO AND ZONE A (WITHOUT BFE)

For Zone AO and Zone A (without BFE), complete Items E1 through E4. If the Elevation Certificate is intended for use as supporting information for a LOMA or LOMR-F, Section C must be completed.

E1. Building Diagram Number _(Select the building diagram most similar to the building for which this certificate is being completed – see pages 6 and 7. If no diagram accurately represents the building, provide a sketch or photograph.)

E2. The top of the bottom floor (including basement or enclosure) of the building is __ ft.(m) __in.(cm) ☐ above or ☐ below (check one) the highest adjacent grade. (Use natural grade, if available).

E3. For Building Diagrams 6-8 with openings (see page 7), the next higher floor or elevated floor (elevation b) of the building is __ ft.(m) __in.(cm) above the highest adjacent grade. Complete items C3.h and C3.i on front of form.

E4. The top of the platform of machinery and/or equipment servicing the building is __ ft.(m) __in.(cm) ☐ above or ☐ below (check one) the highest adjacent grade. (Use natural grade, if available).

E5. For Zone AO only: If no flood depth number is available, is the top of the bottom floor elevated in accordance with the community's floodplain management ordinance?
☐ Yes ☐ No ☐ Unknown. The local official must certify this information in Section G.

SECTION F - PROPERTY OWNER (OR OWNER'S REPRESENTATIVE) CERTIFICATION

The property owner or owner's authorized representative who completes Sections A, B, C (Items C3.h and C3.i only), and E for Zone A (without a FEMA-issued or community-issued BFE) or Zone AO must sign here. *The statements in Sections A, B, C, and E are correct to the best of my knowledge.*

PROPERTY OWNER'S OR OWNER'S AUTHORIZED REPRESENTATIVE'S NAME

ADDRESS | CITY | STATE | ZIP CODE

SIGNATURE | DATE | TELEPHONE

COMMENTS

☐ Check here if attachments

SECTION G - COMMUNITY INFORMATION (OPTIONAL)

The local official who is authorized by law or ordinance to administer the community's floodplain management ordinance can complete Sections A, B, C (or E), and G of this Elevation Certificate. Complete the applicable item(s) and sign below.

G1. ☐ The information in Section C was taken from other documentation that has been signed and embossed by a licensed surveyor, engineer, or architect who is authorized by state or local law to certify elevation information. (Indicate the source and date of the elevation data in the Comments area below.)

G2. ☐ A community official completed Section E for a building located in Zone A (without a FEMA-issued or community-issued BFE) or Zone AO.

G3. ☐ The following information (Items G4-G9) is provided for community floodplain management purposes.

G4. PERMIT NUMBER	G5. DATE PERMIT ISSUED	G6. DATE CERTIFICATE OF COMPLIANCE/OCCUPANCY ISSUED

G7. This permit has been issued for: ☐ New Construction ☐ Substantial Improvement

G8. Elevation of as-built lowest floor (including basement) of the building is: ____. __ft.(m) Datum: _____

G9. BFE or (in Zone AO) depth of flooding at the building site is: ____. __ ft.(m) Datum: _____

LOCAL OFFICIAL'S NAME | TITLE

COMMUNITY NAME | TELEPHONE

SIGNATURE | DATE

COMMENTS

☐ Check here if attachments

LOT NUMBER : 69 (SEE MAP)

DATE : 08-29-02

PLEASE INDICATE APPROX. MEASUREMENT LOCATION

ADDRESS : 1201 NORTH OAKLEAF DRIVE PHX AZ 85008

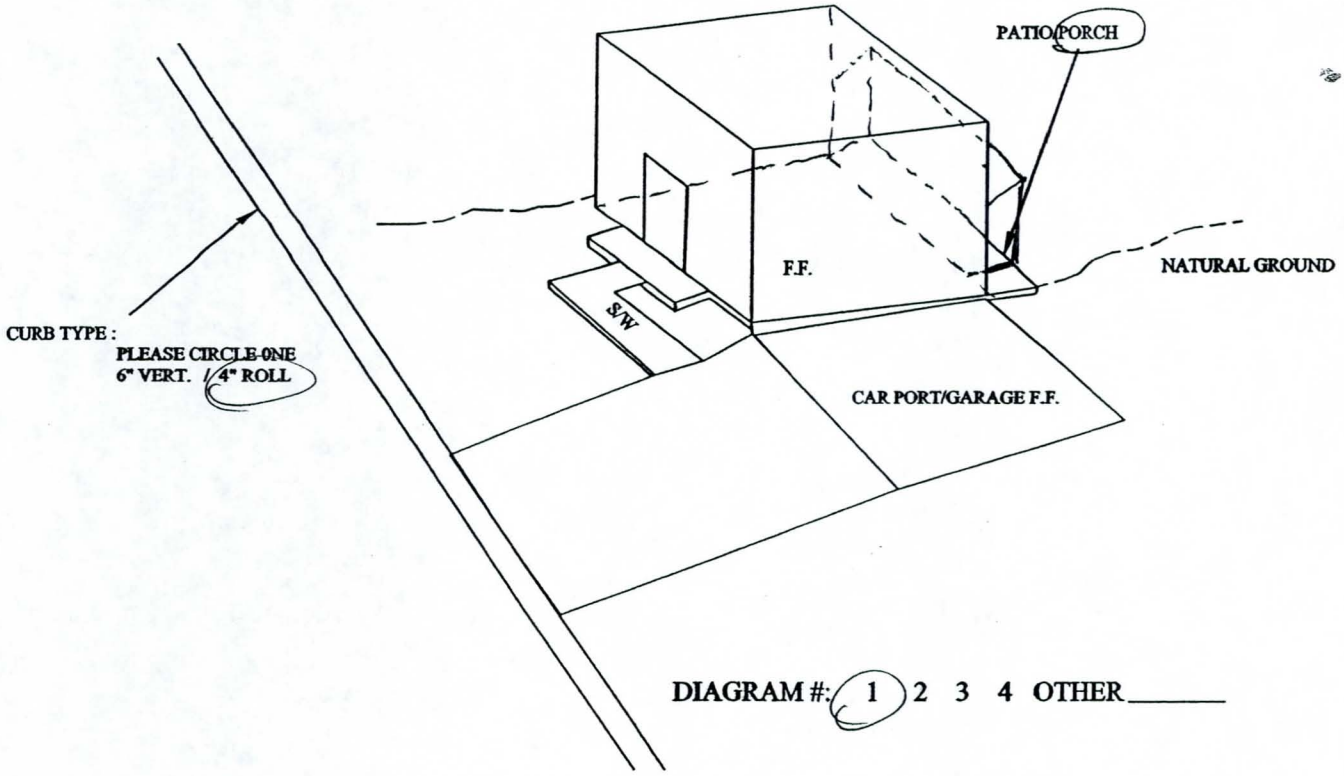

DIAGRAM #: 1 2 3 4 OTHER _____

ELEVATIONS REQUIRED:

① F.F. RESIDENCE	1137.21
② F.F. CAR PORT/GARAGE	1136.46
③ L.A.G.	1135.96
④ H.A.G.	1136.46

L.A.G. - LOWEST ADJACENT GRADE (TO F.F.)
H.A.G. - HIGHEST ADJACENT GRADE (TO F.F.)

RELAVENT NOTES FOR ENGINEER : * LOCATED ON INTERSECTION OF OAKLEAF STREET & 33 RD STREET

LANDMARK ENGINEERING, INC.
7310 N. 16TH STREET SUITE 285
PHOENIX, ARIZONA 85020 (602) 861-2005

COP ELEVATION CERT

LOT : 69

FIGURE

FEDERAL EMERGENCY MANAGEMENT AGENCY
NATIONAL FLOOD INSURANCE PROGRAM

ELEVATION CERTIFICATE

O.M.B. No. 3067-0077
Expires December 31, 2005

Important: Read the instructions on pages 1 - 7.

SECTION A - PROPERTY OWNER INFORMATION

For Insurance Company Use:
Policy Number
Company NAIC Number

BUILDING OWNER'S NAME
Vasquez, Elmer

BUILDING STREET ADDRESS (Including Apt., Unit, Suite, and/or Bldg. No.) OR P.O. ROUTE AND BOX NO.
1205 N. 33rd Street

CITY	STATE	ZIP CODE
Phoenix	AZ	85008

PROPERTY DESCRIPTION (Lot and Block Numbers, Tax Parcel Number, Legal Description, etc.)
Lot #78 Pacel #121-07-019

BUILDING USE (e.g., Residential, Non-residential, Addition, Accessory, etc. Use a Comments area, if necessary.)
Residential

LATITUDE/LONGITUDE (OPTIONAL) (##° - ##' - ##.##" or ##.#####°)
HORIZONTAL DATUM: ☒ NAD 1927 ☐ NAD 1983
SOURCE: ☒ GPS (Type):_____ ☐ USGS Quad Map ☐ Other: _____

SECTION B - FLOOD INSURANCE RATE MAP (FIRM) INFORMATION

B1. NFIP COMMUNITY NAME & COMMUNITY NUMBER	B2. COUNTY NAME	B3. STATE
Phoenix, City of Community Number 040051	Maricopa County	AZ

B4. MAP AND PANEL NUMBER	B5. SUFFIX	B6. FIRM INDEX DATE	B7. FIRM PANEL EFFECTIVE/REVISED DATE	B8. FLOOD ZONE(S)	B9. BASE FLOOD ELEVATION(S) (Zone AO, use depth of flooding)
04013C2135	E	09/30/95	07/19/01	A	1137.19

B10. Indicate the source of the Base Flood Elevation (BFE) data or base flood depth entered in B9.
☐ FIS Profile ☐ FIRM ☐ Community Determined ☒ Other (Describe): Canal Bank
B11. Indicate the elevation datum used for the BFE in B9: ☒ NGVD 1929 ☐ NAVD 1988 ☐ Other (Describe): _____
B12. Is the building located in a Coastal Barrier Resources System (CBRS) area or Otherwise Protected Area (OPA)? ☐ Yes ☒ No Designation Date_____

SECTION C - BUILDING ELEVATION INFORMATION (SURVEY REQUIRED)

C1. Building elevations are based on: ☐ Construction Drawings* ☐ Building Under Construction* ☒ Finished Construction
*A new Elevation Certificate will be required when construction of the building is complete.

C2. Building Diagram Number 1 (Select the building diagram most similar to the building for which this certificate is being completed - see pages 6 and 7. If no diagram accurately represents the building, provide a sketch or photograph.)

C3. Elevations – Zones A1-A30, AE, AH, A (with BFE), VE, V1-V30, V (with BFE), AR, AR/A, AR/AE, AR/A1-A30, AR/AH, AR/AO
Complete Items C3.-a-i below according to the building diagram specified in Item C2. State the datum used. If the datum is different from the datum used for the BFE in Section B, convert the datum to that used for the BFE. Show field measurements and datum conversion calculation. Use the space provided or the Comments area of Section D or Section G, as appropriate, to document the datum conversion.
Datum NGVD Conversion/Comments Benchmark: Brass cap in hand hole; elevation =1138.77 ft. @ centerline intersection o f 32nd Street & McDowell Road
Elevation reference mark used C.O. Phoenix Does the elevation reference mark used appear on the FIRM? ☐ Yes ☒ No

- o a) Top of bottom floor (including basement or enclosure) 1137. 67 ft.(m)
- o b) Top of next higher floor ____. __ft.(m)
- o c) Bottom of lowest horizontal structural member (V zones only) ____. __ft.(m)
- o d) Attached garage (top of slab) 1137. 30 ft.(m)
- o e) Lowest elevation of machinery and/or equipment servicing the building (Describe in a Comments area) ____. __ft.(m)
- o f) Lowest adjacent (finished) grade (LAG) 1137 . .04 ft.(m)
- o g) Highest adjacent (finished) grade (HAG) 1137. 61 ft.(m)
- o h) No. of permanent openings (flood vents) within 1 ft. above adjacent grade _____
- o i) Total area of all permanent openings (flood vents) in C3.h _____sq. in. (sq. cm)

License Number, Embossed Seal, Signature, and Date

Registered Professional Engineer (Civil) CERTIFICATE NO. 12890 JAMES D. LEMON Date Signed 6/16/03 ARIZONA, U.S.A.

SECTION D - SURVEYOR, ENGINEER, OR ARCHITECT CERTIFICATION

This certification is to be signed and sealed by a land surveyor, engineer, or architect authorized by law to certify elevation information.
I certify that the information in Sections A, B, and C on this certificate represents my best efforts to interpret the data available.
I understand that any false statement may be punishable by fine or imprisonment under 18 U.S. Code, Section 1001.

CERTIFIER'S NAME	LICENSE NUMBER		
James D. Lemon, P.E., R.L.S.	# 12890		
TITLE	COMPANY NAME		
President	Landmark Engineering, Inc.		
ADDRESS	CITY	STATE	ZIP CODE
7310 North 16th Street, Suite #285	Phoenix	AZ	85020
SIGNATURE	DATE	TELEPHONE	
	6/16/03	602.861.2005	

IMPORTANT: In these spaces, copy the corresponding information from Section A.

For Insurance Company Use:

BUILDING STREET ADDRESS (Including Apt., Unit, Suite, and/or Bldg. No.) OR P.O. ROUTE AND BOX NO.
1205 N. 33rd Street

Policy Number

CITY	STATE	ZIP CODE
Phoenix	AZ	85008

Company NAIC Number

SECTION D - SURVEYOR, ENGINEER, OR ARCHITECT CERTIFICATION (CONTINUED)

Copy both sides of this Elevation Certificate for (1) community official, (2) insurance agent/company, and (3) building owner.

COMMENTS

☒ Check here if attachments

SECTION E - BUILDING ELEVATION INFORMATION (SURVEY NOT REQUIRED) FOR ZONE AO AND ZONE A (WITHOUT BFE)

For Zone AO and Zone A (without BFE), complete Items E1 through E4. If the Elevation Certificate is intended for use as supporting information for a LOMA or LOMR-F, Section C must be completed.

E1. Building Diagram Number _(Select the building diagram most similar to the building for which this certificate is being completed – see pages 6 and 7. If no diagram accurately represents the building, provide a sketch or photograph.)

E2. The top of the bottom floor (including basement or enclosure) of the building is __ ft.(m) __in.(cm) ☐ above or ☐ below (check one) the highest adjacent grade. (Use natural grade, if available).

E3. For Building Diagrams 6-8 with openings (see page 7), the next higher floor or elevated floor (elevation b) of the building is __ ft.(m) __in.(cm) above the highest adjacent grade. Complete items C3.h and C3.i on front of form.

E4. The top of the platform of machinery and/or equipment servicing the building is __ ft.(m) __in.(cm) ☐ above or ☐ below (check one) the highest adjacent grade. (Use natural grade, if available).

E5. For Zone AO only: If no flood depth number is available, is the top of the bottom floor elevated in accordance with the community's floodplain management ordinance?
☐ Yes ☐ No ☐ Unknown. The local official must certify this information in Section G.

SECTION F - PROPERTY OWNER (OR OWNER'S REPRESENTATIVE) CERTIFICATION

The property owner or owner's authorized representative who completes Sections A, B, C (Items C3.h and C3.i only), and E for Zone A (without a FEMA-issued or community-issued BFE) or Zone AO must sign here. *The statements in Sections A, B, C, and E are correct to the best of my knowledge.*

PROPERTY OWNER'S OR OWNER'S AUTHORIZED REPRESENTATIVE'S NAME

ADDRESS | CITY | STATE | ZIP CODE

SIGNATURE | DATE | TELEPHONE

COMMENTS

☐ Check here if attachments

SECTION G - COMMUNITY INFORMATION (OPTIONAL)

The local official who is authorized by law or ordinance to administer the community's floodplain management ordinance can complete Sections A, B, C (or E), and G of this Elevation Certificate. Complete the applicable item(s) and sign below.

G1. ☐ The information in Section C was taken from other documentation that has been signed and embossed by a licensed surveyor, engineer, or architect who is authorized by state or local law to certify elevation information. (Indicate the source and date of the elevation data in the Comments area below.)

G2. ☐ A community official completed Section E for a building located in Zone A (without a FEMA-issued or community-issued BFE) or Zone AO.

G3. ☐ The following information (Items G4-G9) is provided for community floodplain management purposes.

G4. PERMIT NUMBER	G5. DATE PERMIT ISSUED	G6. DATE CERTIFICATE OF COMPLIANCE/OCCUPANCY ISSUED

G7. This permit has been issued for: ☐ New Construction ☐ Substantial Improvement

G8. Elevation of as-built lowest floor (including basement) of the building is: ____. __ft.(m) Datum: _____

G9. BFE or (in Zone AO) depth of flooding at the building site is: ____. __ ft.(m) Datum: _____

LOCAL OFFICIAL'S NAME | TITLE

COMMUNITY NAME | TELEPHONE

SIGNATURE | DATE

COMMENTS

☐ Check here if attachments

LOT NUMBER : 78 (SEE MAP)

DATE : 08-29-02

PLEASE INDICATE APPROX. MEASUREMENT LOCATION

ADDRESS : 1205 NORTH 33RD STREET PHX AZ 85008

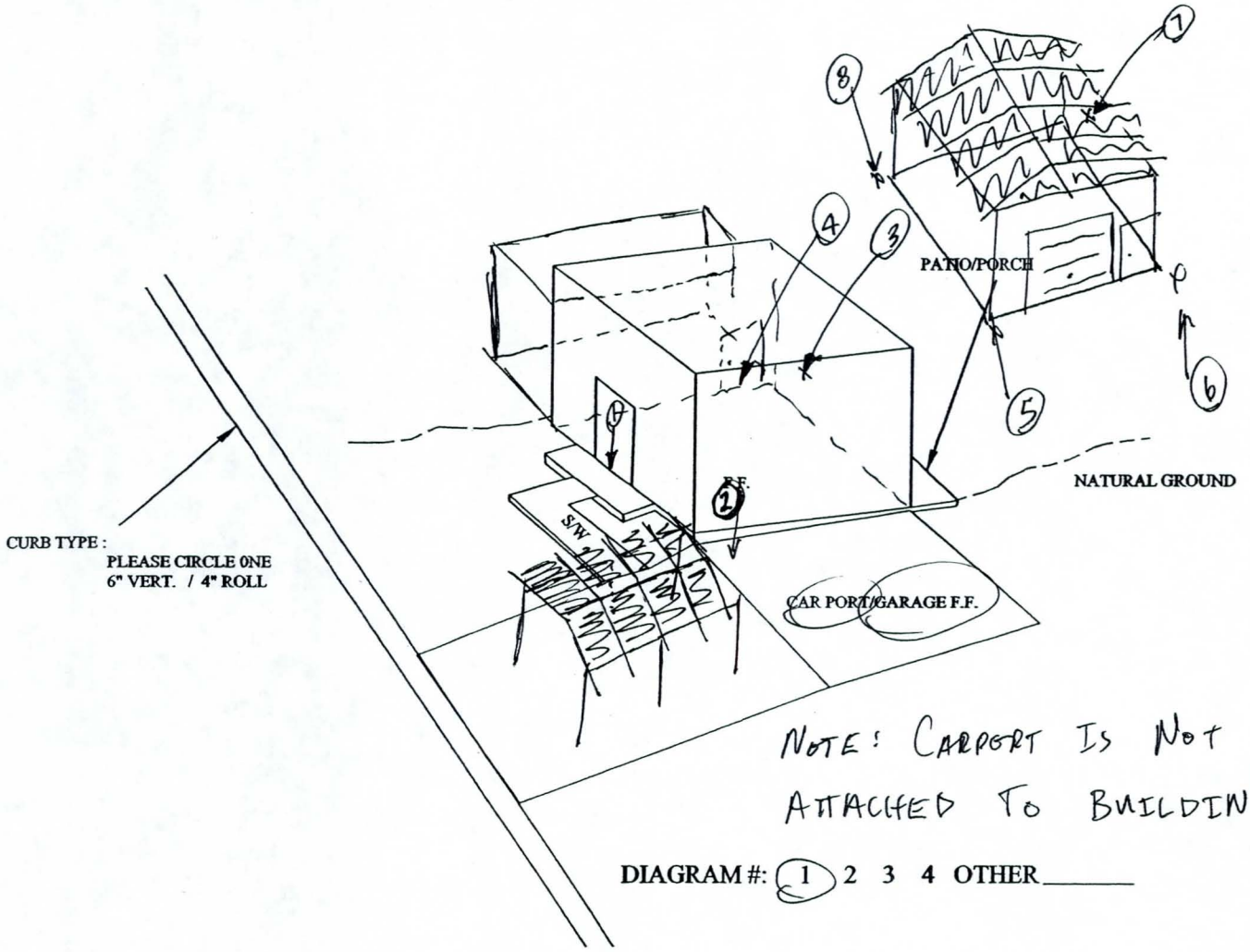

NOTE: CARPORT IS NOT ATTACHED TO BUILDING!

DIAGRAM #: 1 2 3 4 OTHER_____

ELEVATIONS REQUIRED:

① F.F. RESIDENCE	1137.67	⑤	1137.53
② F.F. CAR PORT/GARAGE	1137.30	⑥	1137.07
③ L.A.G.	1137.04 (NATURAL GROUND)	⑦	1137.28
④ H.A.G.	1137.61	⑧	1137.41
		⑨	1137.39

L.A.G. - LOWEST ADJACENT GRADE (TO F.F.)
H.A.G. - HIGHEST ADJACENT GRADE (TO F.F.)

RELAVENT NOTES FOR ENGINEER: *DETACHED GARAGE IN BACKYARD
* 3' HIGH RETAINING WALL DEVIDING FRONT YARD FROM 33RD STREET.

LANDMARK ENGINEERING, INC.
7310 N. 16TH STREET SUITE 285
PHOENIX, ARIZONA 85020 (602) 861-2005

COP ELEVATION CERT

LOT : 78

FIGURE

FEDERAL EMERGENCY MANAGEMENT AGENCY
NATIONAL FLOOD INSURANCE PROGRAM

ELEVATION CERTIFICATE

O.M.B. No. 3067-0077
Expires December 31, 2005

Important: Read the instructions on pages 1 - 7.

SECTION A - PROPERTY OWNER INFORMATION

For Insurance Company Use:
Policy Number
Company NAIC Number

BUILDING OWNER'S NAME
Pastrana, Isabel V. / Hernandez, Eligia P.

BUILDING STREET ADDRESS (Including Apt., Unit, Suite, and/or Bldg. No.) OR P.O. ROUTE AND BOX NO.
1139 N. Oakleaf Drive

CITY	STATE	ZIP CODE
Phoenix	AZ	85008

PROPERTY DESCRIPTION (Lot and Block Numbers, Tax Parcel Number, Legal Description, etc.)
Lot #66 Pacel #121-08-055

BUILDING USE (e.g., Residential, Non-residential, Addition, Accessory, etc. Use a Comments area, if necessary.)
Residential

LATITUDE/LONGITUDE (OPTIONAL) (##° - ##' - ##.##" or ##.#####°)
HORIZONTAL DATUM: ☒ NAD 1927 ☐ NAD 1983
SOURCE: ☒ GPS (Type):____ ☐ USGS Quad Map ☐ Other: _____

SECTION B - FLOOD INSURANCE RATE MAP (FIRM) INFORMATION

B1. NFIP COMMUNITY NAME & COMMUNITY NUMBER	B2. COUNTY NAME	B3. STATE
Phoenix, City of Community Number 040051	Maricopa County	AZ

B4. MAP AND PANEL NUMBER	B5. SUFFIX	B6. FIRM INDEX DATE	B7. FIRM PANEL EFFECTIVE/REVISED DATE	B8. FLOOD ZONE(S)	B9. BASE FLOOD ELEVATION(S) (Zone AO, use depth of flooding)
04013C2135	E	09/30/95	07/19/01	A	1136.79

B10. Indicate the source of the Base Flood Elevation (BFE) data or base flood depth entered in B9.
☐ FIS Profile ☐ FIRM ☐ Community Determined ☒ Other (Describe): Canal Bank

B11. Indicate the elevation datum used for the BFE in B9: ☒ NGVD 1929 ☐ NAVD 1988 ☐ Other (Describe): _____

B12. Is the building located in a Coastal Barrier Resources System (CBRS) area or Otherwise Protected Area (OPA)? ☐ Yes ☒ No Designation Date_____

SECTION C - BUILDING ELEVATION INFORMATION (SURVEY REQUIRED)

C1. Building elevations are based on: ☐ Construction Drawings* ☐ Building Under Construction* ☒ Finished Construction
*A new Elevation Certificate will be required when construction of the building is complete.

C2. Building Diagram Number 1 (Select the building diagram most similar to the building for which this certificate is being completed - see pages 6 and 7. If no diagram accurately represents the building, provide a sketch or photograph.)

C3. Elevations – Zones A1-A30, AE, AH, A (with BFE), VE, V1-V30, V (with BFE), AR, AR/A, AR/AE, AR/A1-A30, AR/AH, AR/AO
Complete Items C3.-a-i below according to the building diagram specified in Item C2. State the datum used. If the datum is different from the datum used for the BFE in Section B, convert the datum to that used for the BFE. Show field measurements and datum conversion calculation. Use the space provided or the Comments area of Section D or Section G, as appropriate, to document the datum conversion.
Datum NGVD Conversion/Comments Benchmark: Brass cap in hand hole; elevation =1138.77 ft. @ centerline intersection o f 32nd Street & McDowell Road
Elevation reference mark used C.O. Phoenix Does the elevation reference mark used appear on the FIRM? ☐ Yes ☒ No

- o a) Top of bottom floor (including basement or enclosure) 1137. 53 ft.(m)
- o b) Top of next higher floor ____. __ft.(m)
- o c) Bottom of lowest horizontal structural member (V zones only) ____. __ft.(m)
- o d) Attached garage (top of slab) 1137. 15 ft.(m)
- o e) Lowest elevation of machinery and/or equipment servicing the building (Describe in a Comments area) ____. __ft.(m)
- o f) Lowest adjacent (finished) grade (LAG) 1136 . 57 ft.(m)
- o g) Highest adjacent (finished) grade (HAG) 1137. 23 ft.(m)
- o h) No. of permanent openings (flood vents) within 1 ft. above adjacent grade _____
- o i) Total area of all permanent openings (flood vents) in C3.h _____sq. in. (sq. cm)

License Number, Embossed Seal, Signature, and Date

Registered Professional Engineer (Civil) CERTIFICATE NO. 12890 JAMES D. LEMON Date Signed 6/16/03 ARIZONA, U.S.A.

SECTION D - SURVEYOR, ENGINEER, OR ARCHITECT CERTIFICATION

This certification is to be signed and sealed by a land surveyor, engineer, or architect authorized by law to certify elevation information.
I certify that the information in Sections A, B, and C on this certificate represents my best efforts to interpret the data available.
I understand that any false statement may be punishable by fine or imprisonment under 18 U.S. Code, Section 1001.

CERTIFIER'S NAME	LICENSE NUMBER		
James D. Lemon, P.E., R.L.S.	# 12890		
TITLE	COMPANY NAME		
President	Landmark Engineering, Inc.		
ADDRESS	CITY	STATE	ZIP CODE
7310 North 16th Street, Suite #285	Phoenix	AZ	85020
SIGNATURE	DATE	TELEPHONE	
James D. Lemon	6/16/03	602.861.2005	

IMPORTANT: In these spaces, copy the corresponding information from Section A.

BUILDING STREET ADDRESS (Including Apt., Unit, Suite, and/or Bldg. No.) OR P.O. ROUTE AND BOX NO.			For Insurance Company Use:
1139 N. Oakleaf Drive			Policy Number
CITY	STATE	ZIP CODE	Company NAIC Number
Phoenix	AZ	85008	

SECTION D - SURVEYOR, ENGINEER, OR ARCHITECT CERTIFICATION (CONTINUED)

Copy both sides of this Elevation Certificate for (1) community official, (2) insurance agent/company, and (3) building owner.

COMMENTS

☒ Check here if attachments

SECTION E - BUILDING ELEVATION INFORMATION (SURVEY NOT REQUIRED) FOR ZONE AO AND ZONE A (WITHOUT BFE)

For Zone AO and Zone A (without BFE), complete Items E1 through E4. If the Elevation Certificate is intended for use as supporting information for a LOMA or LOMR-F, Section C must be completed.

E1. Building Diagram Number _(Select the building diagram most similar to the building for which this certificate is being completed – see pages 6 and 7. If no diagram accurately represents the building, provide a sketch or photograph.)

E2. The top of the bottom floor (including basement or enclosure) of the building is __ ft.(m) __in.(cm) ☐ above or ☐ below (check one) the highest adjacent grade. (Use natural grade, if available).

E3. For Building Diagrams 6-8 with openings (see page 7), the next higher floor or elevated floor (elevation b) of the building is __ ft.(m) __in.(cm) above the highest adjacent grade. Complete items C3.h and C3.i on front of form.

E4. The top of the platform of machinery and/or equipment servicing the building is __ ft.(m) __in.(cm) ☐ above or ☐ below (check one) the highest adjacent grade. (Use natural grade, if available).

E5. For Zone AO only: If no flood depth number is available, is the top of the bottom floor elevated in accordance with the community's floodplain management ordinance?
☐ Yes ☐ No ☐ Unknown. The local official must certify this information in Section G.

SECTION F - PROPERTY OWNER (OR OWNER'S REPRESENTATIVE) CERTIFICATION

The property owner or owner's authorized representative who completes Sections A, B, C (Items C3.h and C3.i only), and E for Zone A (without a FEMA-issued or community-issued BFE) or Zone AO must sign here. *The statements in Sections A, B, C, and E are correct to the best of my knowledge.*

PROPERTY OWNER'S OR OWNER'S AUTHORIZED REPRESENTATIVE'S NAME

ADDRESS | CITY | STATE | ZIP CODE

SIGNATURE | DATE | TELEPHONE

COMMENTS

☐ Check here if attachments

SECTION G - COMMUNITY INFORMATION (OPTIONAL)

The local official who is authorized by law or ordinance to administer the community's floodplain management ordinance can complete Sections A, B, C (or E), and G of this Elevation Certificate. Complete the applicable item(s) and sign below.

G1. ☐ The information in Section C was taken from other documentation that has been signed and embossed by a licensed surveyor, engineer, or architect who is authorized by state or local law to certify elevation information. (Indicate the source and date of the elevation data in the Comments area below.)

G2. ☐ A community official completed Section E for a building located in Zone A (without a FEMA-issued or community-issued BFE) or Zone AO.

G3. ☐ The following information (Items G4-G9) is provided for community floodplain management purposes.

G4. PERMIT NUMBER	G5. DATE PERMIT ISSUED	G6. DATE CERTIFICATE OF COMPLIANCE/OCCUPANCY ISSUED

G7. This permit has been issued for: ☐ New Construction ☐ Substantial Improvement

G8. Elevation of as-built lowest floor (including basement) of the building is: ____. __ft.(m) Datum: _____

G9. BFE or (in Zone AO) depth of flooding at the building site is: ____. __ ft.(m) Datum: _____

LOCAL OFFICIAL'S NAME | TITLE

COMMUNITY NAME | TELEPHONE

SIGNATURE | DATE

COMMENTS

☐ Check here if attachments

LOT NUMBER : 66 (SEE MAP)

DATE : 08-29-02

PLEASE INDICATE APPROX. MEASUREMENT LOCATION

ADDRESS : 1139 N OAKLEAF DRIVE PHX AZ 85008

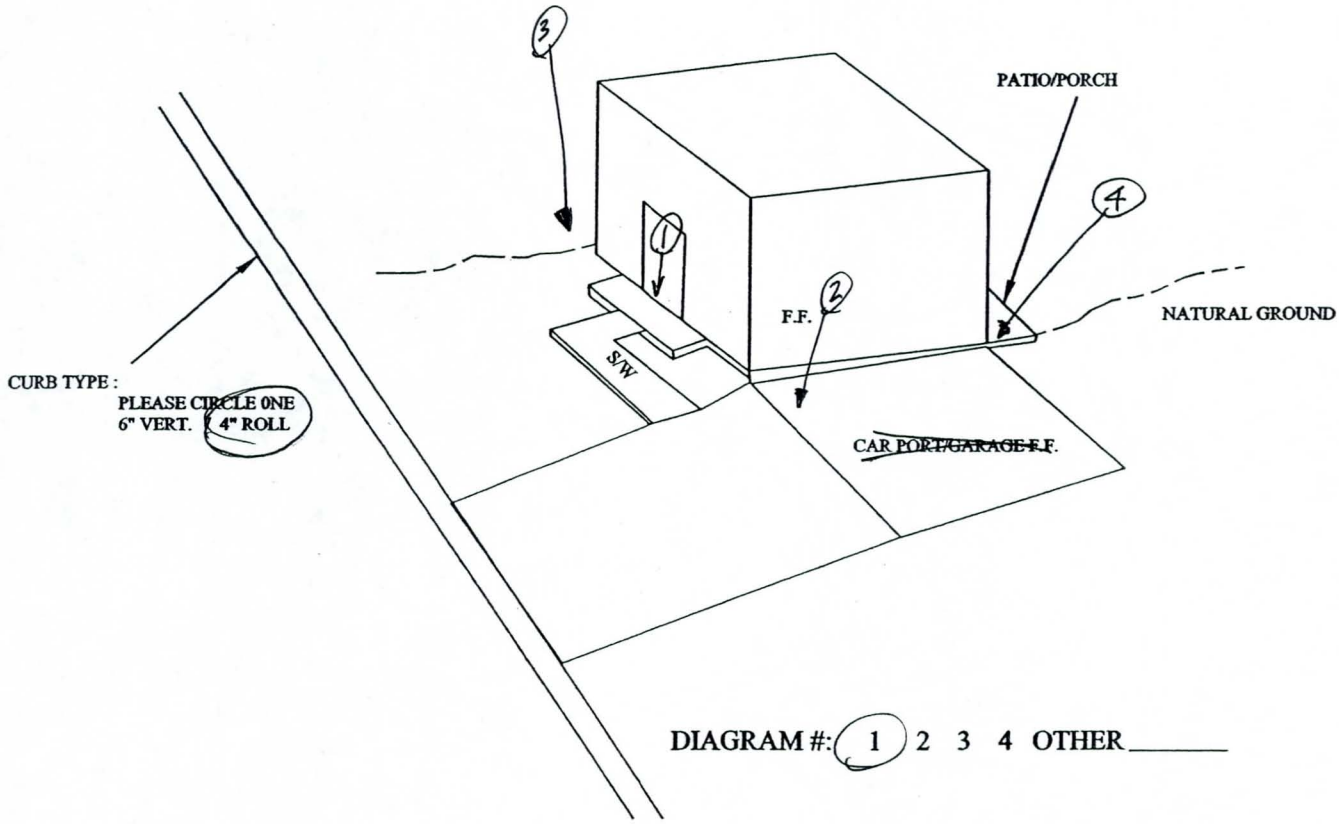

DIAGRAM #: 1 2 3 4 OTHER _____

ELEVATIONS REQUIRED:

1 F.F. RESIDENCE	1137.53
2 F.F. CAR PORT/GARAGE	1137.15
3 L.A.G.	1136.57
4 H.A.G.	1137.23

L.A.G. - LOWEST ADJACENT GRADE (TO F.F.)
H.A.G. - HIGHEST ADJACENT GRADE (TO F.F.)

RELAVENT NOTES FOR ENGINEER : _____

LANDMARK ENGINEERING, INC.
7310 N. 16TH STREET SUITE 285
PHOENIX, ARIZONA 85020 (602) 861-2005

COP ELEVATION CERT
LOT : 66

FIGURE

FEDERAL EMERGENCY MANAGEMENT AGENCY
NATIONAL FLOOD INSURANCE PROGRAM

ELEVATION CERTIFICATE

O.M.B. No. 3067-0077
Expires December 31, 2005

Important: Read the instructions on pages 1 - 7.

SECTION A - PROPERTY OWNER INFORMATION

For Insurance Company Use:
Policy Number
Company NAIC Number

BUILDING OWNER'S NAME
Sillario, Sam G. / Priscilla G.

BUILDING STREET ADDRESS (Including Apt., Unit, Suite, and/or Bldg. No.) OR P.O. ROUTE AND BOX NO.
1145 N. Oakleaf Drive

CITY	STATE	ZIP CODE
Phoenix	AZ	85008

PROPERTY DESCRIPTION (Lot and Block Numbers, Tax Parcel Number, Legal Description, etc.)
Lot #67 Pacel #121-08-056

BUILDING USE (e.g., Residential, Non-residential, Addition, Accessory, etc. Use a Comments area, if necessary.)
Residential

LATITUDE/LONGITUDE (OPTIONAL) (##° - ##' - ##.##" or ##.#####°)
HORIZONTAL DATUM: ☒ NAD 1927 ☐ NAD 1983
SOURCE: ☒ GPS (Type):_____ ☐ USGS Quad Map ☐ Other: _____

SECTION B - FLOOD INSURANCE RATE MAP (FIRM) INFORMATION

B1. NFIP COMMUNITY NAME & COMMUNITY NUMBER	B2. COUNTY NAME	B3. STATE
Phoenix, City of Community Number 040051	Maricopa County	AZ

B4. MAP AND PANEL NUMBER	B5. SUFFIX	B6. FIRM INDEX DATE	B7. FIRM PANEL EFFECTIVE/REVISED DATE	B8. FLOOD ZONE(S)	B9. BASE FLOOD ELEVATION(S) (Zone AO, use depth of flooding)
04013C2135	E	09/30/95	07/19/01	A	1136.78

B10. Indicate the source of the Base Flood Elevation (BFE) data or base flood depth entered in B9.
☐ FIS Profile ☐ FIRM ☐ Community Determined ☒ Other (Describe): Canal Bank

B11. Indicate the elevation datum used for the BFE in B9: ☒ NGVD 1929 ☐ NAVD 1988 ☐ Other (Describe): _____

B12. Is the building located in a Coastal Barrier Resources System (CBRS) area or Otherwise Protected Area (OPA)? ☐ Yes ☒ No Designation Date_____

SECTION C - BUILDING ELEVATION INFORMATION (SURVEY REQUIRED)

C1. Building elevations are based on: ☐ Construction Drawings* ☐ Building Under Construction* ☒ Finished Construction
*A new Elevation Certificate will be required when construction of the building is complete.

C2. Building Diagram Number 1 (Select the building diagram most similar to the building for which this certificate is being completed - see pages 6 and 7. If no diagram accurately represents the building, provide a sketch or photograph.)

C3. Elevations – Zones A1-A30, AE, AH, A (with BFE), VE, V1-V30, V (with BFE), AR, AR/A, AR/AE, AR/A1-A30, AR/AH, AR/AO
Complete Items C3.-a-i below according to the building diagram specified in Item C2. State the datum used. If the datum is different from the datum used for the BFE in Section B, convert the datum to that used for the BFE. Show field measurements and datum conversion calculation. Use the space provided or the Comments area of Section D or Section G, as appropriate, to document the datum conversion.
Datum NGVD Conversion/Comments Benchmark: Brass cap in hand hole; elevation =1138.77 ft. @ centerline intersection o f 32nd Street & McDowell Road
Elevation reference mark used C.O. Phoenix Does the elevation reference mark used appear on the FIRM? ☐ Yes ☒ No

- o a) Top of bottom floor (including basement or enclosure) 1137. 55 ft.(m)
- o b) Top of next higher floor ____. __ft.(m)
- o c) Bottom of lowest horizontal structural member (V zones only) ____. __ft.(m)
- o d) Attached garage (top of slab) 1137. 16 ft.(m)
- o e) Lowest elevation of machinery and/or equipment servicing the building (Describe in a Comments area) ____. __ft.(m)
- o f) Lowest adjacent (finished) grade (LAG) 1136 . 63 ft.(m)
- o g) Highest adjacent (finished) grade (HAG) 1137. 55 ft.(m)
- o h) No. of permanent openings (flood vents) within 1 ft. above adjacent grade _____
- o i) Total area of all permanent openings (flood vents) in C3.h _____sq. in. (sq. cm)

License Number, Embossed Seal, Signature, and Date

Registered Professional Engineer (Civil) CERTIFICATE NO. 12890 JAMES D. LEMON Date Signed 6/16/03 ARIZONA, U.S.A.

SECTION D - SURVEYOR, ENGINEER, OR ARCHITECT CERTIFICATION

This certification is to be signed and sealed by a land surveyor, engineer, or architect authorized by law to certify elevation information.
I certify that the information in Sections A, B, and C on this certificate represents my best efforts to interpret the data available.
I understand that any false statement may be punishable by fine or imprisonment under 18 U.S. Code, Section 1001.

CERTIFIER'S NAME	LICENSE NUMBER		
James D. Lemon, P.E., R.L.S.	# 12890		
TITLE	COMPANY NAME		
President	Landmark Engineering, Inc.		
ADDRESS	CITY	STATE	ZIP CODE
7310 North 16th Street, Suite #285	Phoenix	AZ	85020
SIGNATURE	DATE	TELEPHONE	
	6/16/03	602.861.2005	

IMPORTANT: In these spaces, copy the corresponding information from Section A.

For Insurance Company Use:

BUILDING STREET ADDRESS (Including Apt., Unit, Suite, and/or Bldg. No.) OR P.O. ROUTE AND BOX NO.
1145 N. Oakleaf Drive

Policy Number

CITY	STATE	ZIP CODE
Phoenix	AZ	85008

Company NAIC Number

SECTION D - SURVEYOR, ENGINEER, OR ARCHITECT CERTIFICATION (CONTINUED)

Copy both sides of this Elevation Certificate for (1) community official, (2) insurance agent/company, and (3) building owner.

COMMENTS

☒ Check here if attachments

SECTION E - BUILDING ELEVATION INFORMATION (SURVEY NOT REQUIRED) FOR ZONE AO AND ZONE A (WITHOUT BFE)

For Zone AO and Zone A (without BFE), complete Items E1 through E4. If the Elevation Certificate is intended for use as supporting information for a LOMA or LOMR-F, Section C must be completed.

E1. Building Diagram Number _(Select the building diagram most similar to the building for which this certificate is being completed – see pages 6 and 7. If no diagram accurately represents the building, provide a sketch or photograph.)

E2. The top of the bottom floor (including basement or enclosure) of the building is __ ft.(m) __in.(cm) ☐ above or ☐ below (check one) the highest adjacent grade. (Use natural grade, if available).

E3. For Building Diagrams 6-8 with openings (see page 7), the next higher floor or elevated floor (elevation b) of the building is __ ft.(m) __in.(cm) above the highest adjacent grade. Complete items C3.h and C3.i on front of form.

E4. The top of the platform of machinery and/or equipment servicing the building is __ ft.(m) __in.(cm) ☐ above or ☐ below (check one) the highest adjacent grade. (Use natural grade, if available).

E5. For Zone AO only: If no flood depth number is available, is the top of the bottom floor elevated in accordance with the community's floodplain management ordinance?
☐ Yes ☐ No ☐ Unknown. The local official must certify this information in Section G.

SECTION F - PROPERTY OWNER (OR OWNER'S REPRESENTATIVE) CERTIFICATION

The property owner or owner's authorized representative who completes Sections A, B, C (Items C3.h and C3.i only), and E for Zone A (without a FEMA-issued or community-issued BFE) or Zone AO must sign here. *The statements in Sections A, B, C, and E are correct to the best of my knowledge.*

PROPERTY OWNER'S OR OWNER'S AUTHORIZED REPRESENTATIVE'S NAME

ADDRESS | CITY | STATE | ZIP CODE

SIGNATURE | DATE | TELEPHONE

COMMENTS

☐ Check here if attachments

SECTION G - COMMUNITY INFORMATION (OPTIONAL)

The local official who is authorized by law or ordinance to administer the community's floodplain management ordinance can complete Sections A, B, C (or E), and G of this Elevation Certificate. Complete the applicable item(s) and sign below.

G1. ☐ The information in Section C was taken from other documentation that has been signed and embossed by a licensed surveyor, engineer, or architect who is authorized by state or local law to certify elevation information. (Indicate the source and date of the elevation data in the Comments area below.)

G2. ☐ A community official completed Section E for a building located in Zone A (without a FEMA-issued or community-issued BFE) or Zone AO.

G3. ☐ The following information (Items G4-G9) is provided for community floodplain management purposes.

G4. PERMIT NUMBER	G5. DATE PERMIT ISSUED	G6. DATE CERTIFICATE OF COMPLIANCE/OCCUPANCY ISSUED

G7. This permit has been issued for: ☐ New Construction ☐ Substantial Improvement

G8. Elevation of as-built lowest floor (including basement) of the building is: ____. __ft.(m) Datum: _____

G9. BFE or (in Zone AO) depth of flooding at the building site is: ____. __ ft.(m) Datum: _____

LOCAL OFFICIAL'S NAME | TITLE

COMMUNITY NAME | TELEPHONE

SIGNATURE | DATE

COMMENTS

☐ Check here if attachments

LOT NUMBER : 67 (SEE MAP)

DATE : 08-29-02

PLEASE INDICATE APPROX. MEASUREMENT LOCATION

ADDRESS : 1145 NORTH OAKLEAF DRIVE PHX AZ 85008

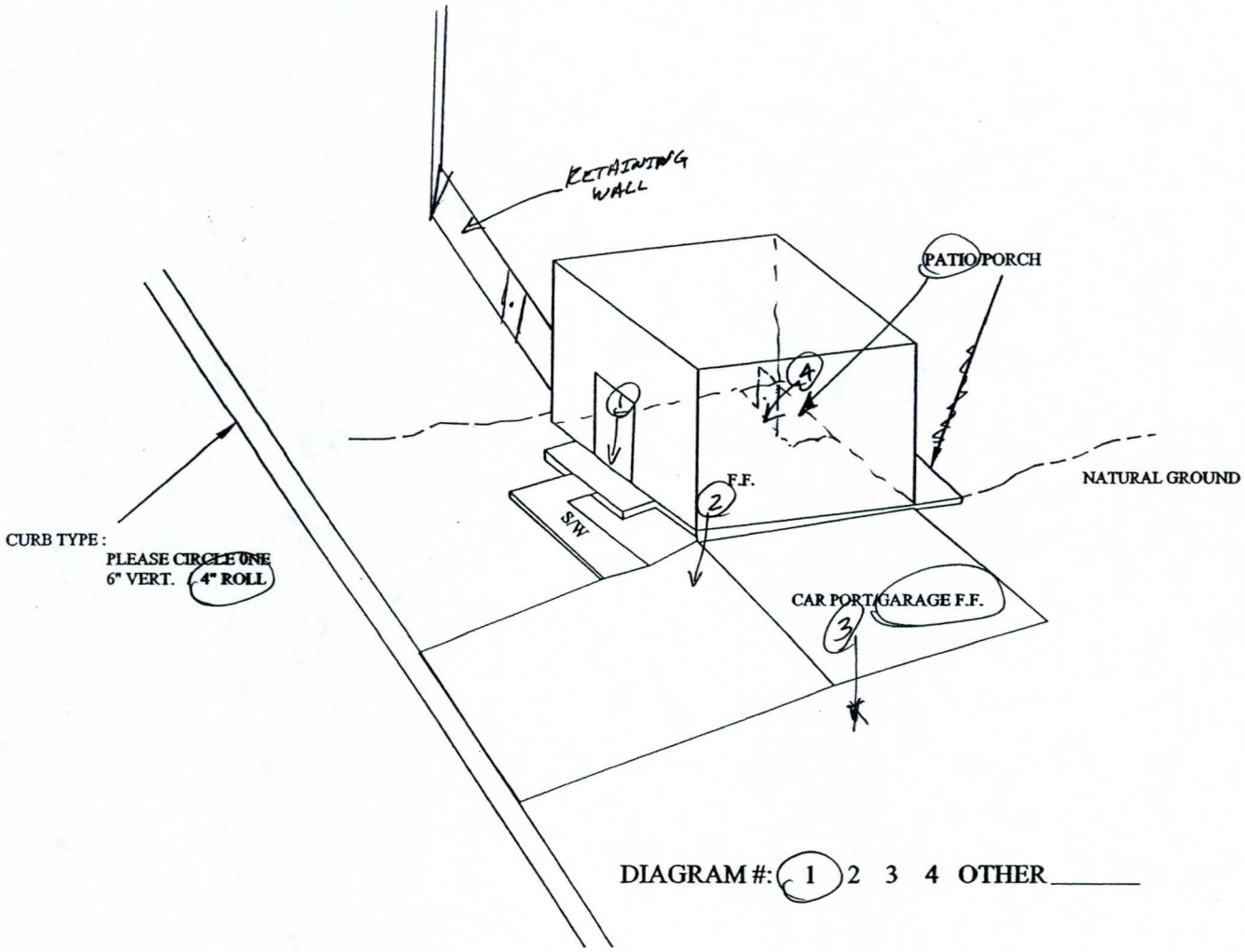

DIAGRAM #: 1 2 3 4 OTHER_____

ELEVATIONS REQUIRED:

1 F.F. RESIDENCE	1137.55
2 F.F. CAR PORT/GARAGE	1137.16
3 L.A.G.	1136.63
4 H.A.G.	1137.55 (PATIO)

L.A.G. - LOWEST ADJACENT GRADE (TO F.F.)
H.A.G. - HIGHEST ADJACENT GRADE (TO F.F.)

RELAVENT NOTES FOR ENGINEER: *GARAGE IS ATTACHED TO RESIDENCE
*PATIO IS ATTACHED TO HOUSE, WHICH CARRIES SAME PITCH SLOPE OF ROOF.

LANDMARK ENGINEERING, INC.
7310 N. 16TH STREET SUITE 285
PHOENIX, ARIZONA 85020 (602) 861-2005

COP ELEVATION CERT

LOT : 67

FIGURE

FEDERAL EMERGENCY MANAGEMENT AGENCY
NATIONAL FLOOD INSURANCE PROGRAM

ELEVATION CERTIFICATE

O.M.B. No. 3067-0077
Expires December 31, 2005

Important: Read the instructions on pages 1 - 7.

SECTION A - PROPERTY OWNER INFORMATION

For Insurance Company Use:
Policy Number
Company NAIC Number

BUILDING OWNER'S NAME
Peralta, Vincent Sr. / Carmen

BUILDING STREET ADDRESS (Including Apt., Unit, Suite, and/or Bldg. No.) OR P.O. ROUTE AND BOX NO.
1131 N. Oakleaf Drive

CITY	STATE	ZIP CODE
Phoenix	AZ	85008

PROPERTY DESCRIPTION (Lot and Block Numbers, Tax Parcel Number, Legal Description, etc.)
Lot #65 Pacel #121-08-054

BUILDING USE (e.g., Residential, Non-residential, Addition, Accessory, etc. Use a Comments area, if necessary.)
Residential

LATITUDE/LONGITUDE (OPTIONAL) (##° - ##' - ##.##" or ##.#####°)

HORIZONTAL DATUM: ☒ NAD 1927 ☐ NAD 1983

SOURCE: ☒ GPS (Type):____ ☐ USGS Quad Map ☐ Other: _____

SECTION B - FLOOD INSURANCE RATE MAP (FIRM) INFORMATION

B1. NFIP COMMUNITY NAME & COMMUNITY NUMBER	B2. COUNTY NAME	B3. STATE
Phoenix, City of Community Number 040051	Maricopa County	AZ

B4. MAP AND PANEL NUMBER	B5. SUFFIX	B6. FIRM INDEX DATE	B7. FIRM PANEL EFFECTIVE/REVISED DATE	B8. FLOOD ZONE(S)	B9. BASE FLOOD ELEVATION(S) (Zone AO, use depth of flooding)
04013C2135	E	09/30/95	07/19/01	A	1136.89

B10. Indicate the source of the Base Flood Elevation (BFE) data or base flood depth entered in B9.
☐ FIS Profile ☐ FIRM ☐ Community Determined ☒ Other (Describe): Canal Bank

B11. Indicate the elevation datum used for the BFE in B9: ☒ NGVD 1929 ☐ NAVD 1988 ☐ Other (Describe): ____

B12. Is the building located in a Coastal Barrier Resources System (CBRS) area or Otherwise Protected Area (OPA)? ☐ Yes ☒ No Designation Date____

SECTION C - BUILDING ELEVATION INFORMATION (SURVEY REQUIRED)

C1. Building elevations are based on: ☐ Construction Drawings* ☐ Building Under Construction* ☒ Finished Construction
*A new Elevation Certificate will be required when construction of the building is complete.

C2. Building Diagram Number 1 (Select the building diagram most similar to the building for which this certificate is being completed - see pages 6 and 7. If no diagram accurately represents the building, provide a sketch or photograph.)

C3. Elevations – Zones A1-A30, AE, AH, A (with BFE), VE, V1-V30, V (with BFE), AR, AR/A, AR/AE, AR/A1-A30, AR/AH, AR/AO
Complete Items C3.-a-i below according to the building diagram specified in Item C2. State the datum used. If the datum is different from the datum used for the BFE in Section B, convert the datum to that used for the BFE. Show field measurements and datum conversion calculation. Use the space provided or the Comments area of Section D or Section G, as appropriate, to document the datum conversion.
Datum NGVD Conversion/Comments Benchmark: Brass cap in hand hole; elevation =1138.77 ft. @ centerline intersection o f 32nd Street & McDowell Road
Elevation reference mark used C.O. Phoenix Does the elevation reference mark used appear on the FIRM? ☐ Yes ☒ No

- o a) Top of bottom floor (including basement or enclosure) 1137. 97 ft.(m)
- o b) Top of next higher floor ____. __ft.(m)
- o c) Bottom of lowest horizontal structural member (V zones only) ____. __ft.(m)
- o d) Attached garage (top of slab) 1137. 59 ft.(m)
- o e) Lowest elevation of machinery and/or equipment servicing the building (Describe in a Comments area) ____. __ft.(m)
- o f) Lowest adjacent (finished) grade (LAG) 1136. 94 ft.(m)
- o g) Highest adjacent (finished) grade (HAG) 1137. 18 ft.(m)
- o h) No. of permanent openings (flood vents) within 1 ft. above adjacent grade _____
- o i) Total area of all permanent openings (flood vents) in C3.h _____sq. in. (sq. cm)

License Number, Embossed Seal, Signature, and Date

Registered Professional Engineer (Civil) CERTIFICATE NO. 12890 JAMES D. LEMON Date Signed 6/16/03 ARIZONA, U.S.A.

SECTION D - SURVEYOR, ENGINEER, OR ARCHITECT CERTIFICATION

This certification is to be signed and sealed by a land surveyor, engineer, or architect authorized by law to certify elevation information.
I certify that the information in Sections A, B, and C on this certificate represents my best efforts to interpret the data available.
I understand that any false statement may be punishable by fine or imprisonment under 18 U.S. Code, Section 1001.

CERTIFIER'S NAME	LICENSE NUMBER
James D. Lemon, P.E., R.L.S.	# 12890

TITLE	COMPANY NAME
President	Landmark Engineering, Inc.

ADDRESS	CITY	STATE	ZIP CODE
7310 North 16th Street, Suite #285	Phoenix	AZ	85020

SIGNATURE	DATE	TELEPHONE
James D. Lemon	6/16/03	602.861.2005

IMPORTANT: In these spaces, copy the corresponding information from Section A.			For Insurance Company Use:
BUILDING STREET ADDRESS (Including Apt., Unit, Suite, and/or Bldg. No.) OR P.O. ROUTE AND BOX NO. 1131 N. Oakleaf Drive			Policy Number
CITY Phoenix	STATE AZ	ZIP CODE 85008	Company NAIC Number

SECTION D - SURVEYOR, ENGINEER, OR ARCHITECT CERTIFICATION (CONTINUED)

Copy both sides of this Elevation Certificate for (1) community official, (2) insurance agent/company, and (3) building owner.

COMMENTS

Homeowner was not home at time of survey for rear yard access. Landmark Engineering was unable to complete survey. Neighbor noted that homeowner had passed away recently.

☒ Check here if attachments

SECTION E - BUILDING ELEVATION INFORMATION (SURVEY NOT REQUIRED) FOR ZONE AO AND ZONE A (WITHOUT BFE)

For Zone AO and Zone A (without BFE), complete Items E1 through E4. If the Elevation Certificate is intended for use as supporting information for a LOMA or LOMR-F, Section C must be completed.

E1. Building Diagram Number _(Select the building diagram most similar to the building for which this certificate is being completed – see pages 6 and 7. If no diagram accurately represents the building, provide a sketch or photograph.)

E2. The top of the bottom floor (including basement or enclosure) of the building is __ ft.(m) __in.(cm) ☐ above or ☐ below (check one) the highest adjacent grade. (Use natural grade, if available).

E3. For Building Diagrams 6-8 with openings (see page 7), the next higher floor or elevated floor (elevation b) of the building is __ ft.(m) __in.(cm) above the highest adjacent grade. Complete items C3.h and C3.i on front of form.

E4. The top of the platform of machinery and/or equipment servicing the building is __ ft.(m) __in.(cm) ☐ above or ☐ below (check one) the highest adjacent grade. (Use natural grade, if available).

E5. For Zone AO only: If no flood depth number is available, is the top of the bottom floor elevated in accordance with the community's floodplain management ordinance?
☐ Yes ☐ No ☐ Unknown. The local official must certify this information in Section G.

SECTION F - PROPERTY OWNER (OR OWNER'S REPRESENTATIVE) CERTIFICATION

The property owner or owner's authorized representative who completes Sections A, B, C (Items C3.h and C3.i only), and E for Zone A (without a FEMA-issued or community-issued BFE) or Zone AO must sign here. *The statements in Sections A, B, C, and E are correct to the best of my knowledge.*

PROPERTY OWNER'S OR OWNER'S AUTHORIZED REPRESENTATIVE'S NAME

ADDRESS | CITY | STATE | ZIP CODE

SIGNATURE | DATE | TELEPHONE

COMMENTS

☐ Check here if attachments

SECTION G - COMMUNITY INFORMATION (OPTIONAL)

The local official who is authorized by law or ordinance to administer the community's floodplain management ordinance can complete Sections A, B, C (or E), and G of this Elevation Certificate. Complete the applicable item(s) and sign below.

G1. ☐ The information in Section C was taken from other documentation that has been signed and embossed by a licensed surveyor, engineer, or architect who is authorized by state or local law to certify elevation information. (Indicate the source and date of the elevation data in the Comments area below.)

G2. ☐ A community official completed Section E for a building located in Zone A (without a FEMA-issued or community-issued BFE) or Zone AO.

G3. ☐ The following information (Items G4-G9) is provided for community floodplain management purposes.

G4. PERMIT NUMBER	G5. DATE PERMIT ISSUED	G6. DATE CERTIFICATE OF COMPLIANCE/OCCUPANCY ISSUED

G7. This permit has been issued for: ☐ New Construction ☐ Substantial Improvement

G8. Elevation of as-built lowest floor (including basement) of the building is: ____. __ft.(m) Datum: _____

G9. BFE or (in Zone AO) depth of flooding at the building site is: ____. __ ft.(m) Datum: _____

LOCAL OFFICIAL'S NAME | TITLE

COMMUNITY NAME | TELEPHONE

SIGNATURE | DATE

COMMENTS

☐ Check here if attachments

LOT NUMBER : 65 (SEE MAP)

DATE : 08-29-02

PLEASE INDICATE APPROX. MEASUREMENT LOCATION

ADDRESS : 1131 NORTH OAKLEAF DRIVE PHX AZ 85008

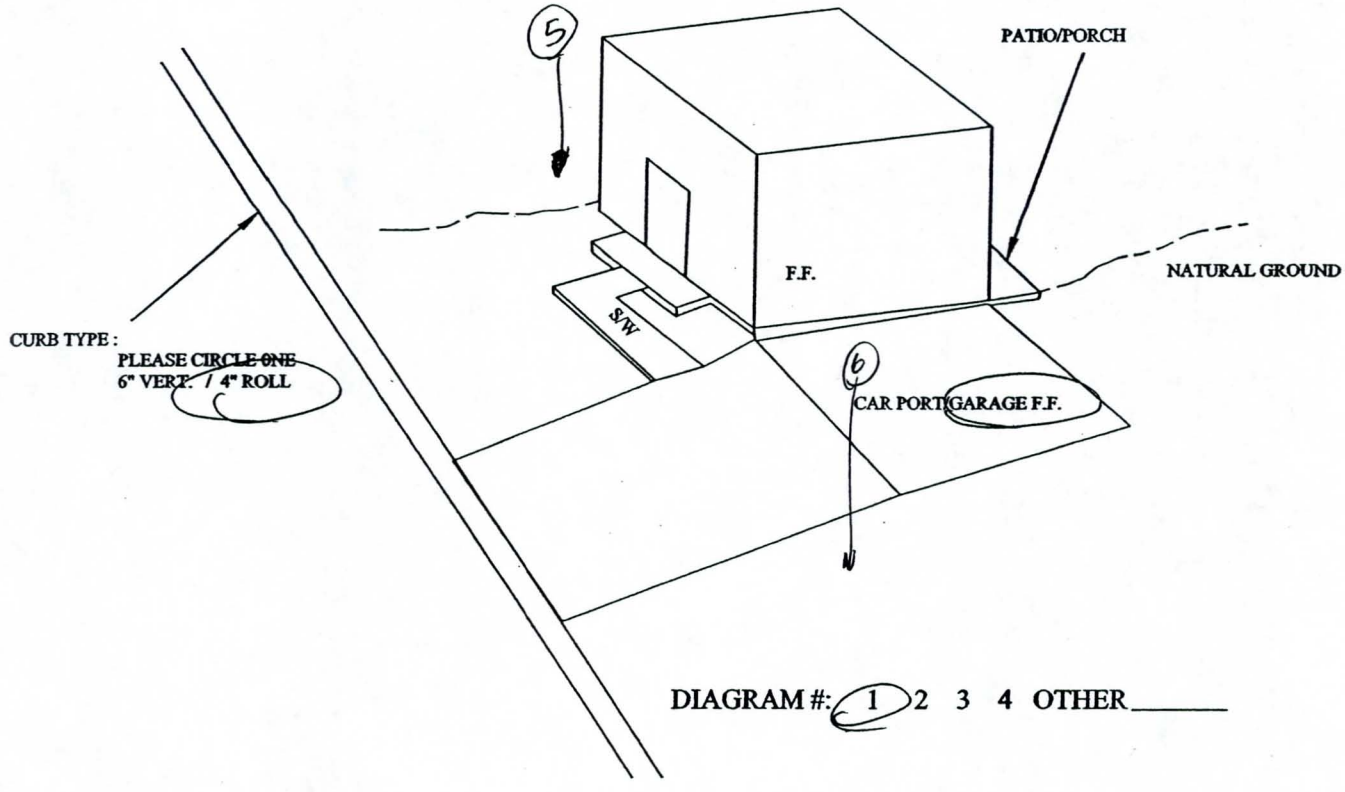

DIAGRAM #: 1 2 3 4 OTHER_____

ELEVATIONS REQUIRED:

① F.F. RESIDENCE	1137.97'	⑤	1136.94'
② F.F. CAR PORT/GARAGE	1137.59'	⑥	1137.18'
③ L.A.G.	N/A		
④ H.A.G.	N/A		

L.A.G. - LOWEST ADJACENT GRADE (TO F.F.)
H.A.G. - HIGHEST ADJACENT GRADE (TO F.F.)

RELAVENT NOTES FOR ENGINEER : *NO BODY WAS HOME AT TIME OF SURVEY
*NEIGHBOR NOTED THAT RESIDENT HAD RECENTLY PASSED AWAY & DAUGHTER WAS WATCHING HOUSE

LANDMARK ENGINEERING, INC.
7310 N. 16TH STREET SUITE 285
PHOENIX, ARIZONA 85020 (602) 861-2005

COP ELEVATION CERT

LOT : 65

FIGURE

FEDERAL EMERGENCY MANAGEMENT AGENCY
NATIONAL FLOOD INSURANCE PROGRAM

ELEVATION CERTIFICATE

O.M.B. No. 3067-0077
Expires December 31, 2005

Important: Read the instructions on pages 1 - 7.

SECTION A - PROPERTY OWNER INFORMATION

For Insurance Company Use:
Policy Number
Company NAIC Number

BUILDING OWNER'S NAME
Jaquez, Manuel A. / Rivera, Teresa J.

BUILDING STREET ADDRESS (Including Apt., Unit, Suite, and/or Bldg. No.) OR P.O. ROUTE AND BOX NO.
1140 N. 34th Street

CITY	STATE	ZIP CODE
Phoenix	AZ	85008

PROPERTY DESCRIPTION (Lot and Block Numbers, Tax Parcel Number, Legal Description, etc.)
Lot #64 Pacel #121-08-053

BUILDING USE (e.g., Residential, Non-residential, Addition, Accessory, etc. Use a Comments area, if necessary.)
Residential

LATITUDE/LONGITUDE (OPTIONAL) (##° - ## - ##.##" or ##.#####°)
HORIZONTAL DATUM: ☒ NAD 1927 ☐ NAD 1983
SOURCE: ☒ GPS (Type):____ ☐ USGS Quad Map ☐ Other: _____

SECTION B - FLOOD INSURANCE RATE MAP (FIRM) INFORMATION

B1. NFIP COMMUNITY NAME & COMMUNITY NUMBER	B2. COUNTY NAME	B3. STATE
Phoenix, City of Community Number 040051	Maricopa County	AZ

B4. MAP AND PANEL NUMBER	B5. SUFFIX	B6. FIRM INDEX DATE	B7. FIRM PANEL EFFECTIVE/REVISED DATE	B8. FLOOD ZONE(S)	B9. BASE FLOOD ELEVATION(S) (Zone AO, use depth of flooding)
04013C2135	E	09/30/95	07/19/01	A	1137.14

B10. Indicate the source of the Base Flood Elevation (BFE) data or base flood depth entered in B9.
☐ FIS Profile ☐ FIRM ☐ Community Determined ☒ Other (Describe): Canal Bank

B11. Indicate the elevation datum used for the BFE in B9: ☒ NGVD 1929 ☐ NAVD 1988 ☐ Other (Describe): _____

B12. Is the building located in a Coastal Barrier Resources System (CBRS) area or Otherwise Protected Area (OPA)? ☐ Yes ☒ No Designation Date_____

SECTION C - BUILDING ELEVATION INFORMATION (SURVEY REQUIRED)

C1. Building elevations are based on: ☐ Construction Drawings* ☐ Building Under Construction* ☒ Finished Construction
*A new Elevation Certificate will be required when construction of the building is complete.

C2. Building Diagram Number 1 (Select the building diagram most similar to the building for which this certificate is being completed - see pages 6 and 7. If no diagram accurately represents the building, provide a sketch or photograph.)

C3. Elevations – Zones A1-A30, AE, AH, A (with BFE), VE, V1-V30, V (with BFE), AR, AR/A, AR/AE, AR/A1-A30, AR/AH, AR/AO
Complete Items C3.-a-i below according to the building diagram specified in Item C2. State the datum used. If the datum is different from the datum used for the BFE in Section B, convert the datum to that used for the BFE. Show field measurements and datum conversion calculation. Use the space provided or the Comments area of Section D or Section G, as appropriate, to document the datum conversion.
Datum NGVD Conversion/Comments Benchmark: Brass cap in hand hole; elevation =1138.77 ft. @ centerline intersection o f 32nd Street & McDowell Road
Elevation reference mark used C.O. Phoenix Does the elevation reference mark used appear on the FIRM? ☐ Yes ☒ No

- o a) Top of bottom floor (including basement or enclosure) 1138. 49 ft.(m)
- o b) Top of next higher floor ____. __ft.(m)
- o c) Bottom of lowest horizontal structural member (V zones only) ____. __ft.(m)
- o d) Attached garage (top of slab) 1138. 05 ft.(m)
- o e) Lowest elevation of machinery and/or equipment servicing the building (Describe in a Comments area) ____. __ft.(m)
- o f) Lowest adjacent (finished) grade (LAG) 1137 . 52 ft.(m)
- o g) Highest adjacent (finished) grade (HAG) 1138. 10 ft.(m)
- o h) No. of permanent openings (flood vents) within 1 ft. above adjacent grade _____
- o i) Total area of all permanent openings (flood vents) in C3.h _____sq. in. (sq. cm)

License Number, Embossed Seal, Signature, and Date

Registered Professional Engineer (Civil) CERTIFICATE NO. 12890 JAMES D. LEMON Date Signed 6/16/03 ARIZONA, U.S.A.

SECTION D - SURVEYOR, ENGINEER, OR ARCHITECT CERTIFICATION

This certification is to be signed and sealed by a land surveyor, engineer, or architect authorized by law to certify elevation information.
I certify that the information in Sections A, B, and C on this certificate represents my best efforts to interpret the data available.
I understand that any false statement may be punishable by fine or imprisonment under 18 U.S. Code, Section 1001.

CERTIFIER'S NAME	LICENSE NUMBER		
James D. Lemon, P.E., R.L.S.	# 12890		
TITLE	COMPANY NAME		
President	Landmark Engineering, Inc.		
ADDRESS	CITY	STATE	ZIP CODE
7310 North 16th Street, Suite #285	Phoenix	AZ	85020
SIGNATURE	DATE	TELEPHONE	
	6/16/03	602.861.2005	

IMPORTANT: In these spaces, copy the corresponding information from Section A.

For Insurance Company Use:

BUILDING STREET ADDRESS (Including Apt., Unit, Suite, and/or Bldg. No.) OR P.O. ROUTE AND BOX NO.			Policy Number
1140 N. 34th Street			
CITY	STATE	ZIP CODE	Company NAIC Number
Phoenix	AZ	85008	

SECTION D - SURVEYOR, ENGINEER, OR ARCHITECT CERTIFICATION (CONTINUED)

Copy both sides of this Elevation Certificate for (1) community official, (2) insurance agent/company, and (3) building owner.

COMMENTS

Homeowner was not home at time of survey for rear yard access. Landmark Engineering was unable to complete survey. Neighbor noted that homeowner had passed away recently.

☒ Check here if attachments

SECTION E - BUILDING ELEVATION INFORMATION (SURVEY NOT REQUIRED) FOR ZONE AO AND ZONE A (WITHOUT BFE)

For Zone AO and Zone A (without BFE), complete Items E1 through E4. If the Elevation Certificate is intended for use as supporting information for a LOMA or LOMR-F, Section C must be completed.

E1. Building Diagram Number _(Select the building diagram most similar to the building for which this certificate is being completed – see pages 6 and 7. If no diagram accurately represents the building, provide a sketch or photograph.)

E2. The top of the bottom floor (including basement or enclosure) of the building is __ ft.(m) __in.(cm) ☐ above or ☐ below (check one) the highest adjacent grade. (Use natural grade, if available).

E3. For Building Diagrams 6-8 with openings (see page 7), the next higher floor or elevated floor (elevation b) of the building is __ ft.(m) __in.(cm) above the highest adjacent grade. Complete items C3.h and C3.i on front of form.

E4. The top of the platform of machinery and/or equipment servicing the building is __ ft.(m) __in.(cm) ☐ above or ☐ below (check one) the highest adjacent grade. (Use natural grade, if available).

E5. For Zone AO only: If no flood depth number is available, is the top of the bottom floor elevated in accordance with the community's floodplain management ordinance?
☐ Yes ☐ No ☐ Unknown. The local official must certify this information in Section G.

SECTION F - PROPERTY OWNER (OR OWNER'S REPRESENTATIVE) CERTIFICATION

The property owner or owner's authorized representative who completes Sections A, B, C (Items C3.h and C3.i only), and E for Zone A (without a FEMA-issued or community-issued BFE) or Zone AO must sign here. *The statements in Sections A, B, C, and E are correct to the best of my knowledge.*

PROPERTY OWNER'S OR OWNER'S AUTHORIZED REPRESENTATIVE'S NAME

ADDRESS | CITY | STATE | ZIP CODE

SIGNATURE | DATE | TELEPHONE

COMMENTS

☐ Check here if attachments

SECTION G - COMMUNITY INFORMATION (OPTIONAL)

The local official who is authorized by law or ordinance to administer the community's floodplain management ordinance can complete Sections A, B, C (or E), and G of this Elevation Certificate. Complete the applicable item(s) and sign below.

G1. ☐ The information in Section C was taken from other documentation that has been signed and embossed by a licensed surveyor, engineer, or architect who is authorized by state or local law to certify elevation information. (Indicate the source and date of the elevation data in the Comments area below.)

G2. ☐ A community official completed Section E for a building located in Zone A (without a FEMA-issued or community-issued BFE) or Zone AO.

G3. ☐ The following information (Items G4-G9) is provided for community floodplain management purposes.

G4. PERMIT NUMBER	G5. DATE PERMIT ISSUED	G6. DATE CERTIFICATE OF COMPLIANCE/OCCUPANCY ISSUED

G7. This permit has been issued for: ☐ New Construction ☐ Substantial Improvement

G8. Elevation of as-built lowest floor (including basement) of the building is: ____. __ft.(m) Datum: ____

G9. BFE or (in Zone AO) depth of flooding at the building site is: ____. __ ft.(m) Datum: ____

LOCAL OFFICIAL'S NAME | TITLE

COMMUNITY NAME | TELEPHONE

SIGNATURE | DATE

COMMENTS

☐ Check here if attachments

LOT NUMBER : 64 (SEE MAP)

DATE : 08-29-02

PLEASE INDICATE APPROX. MEASUREMENT LOCATION

ADDRESS : 1140 N. 34TH ST PHX AZ 85008

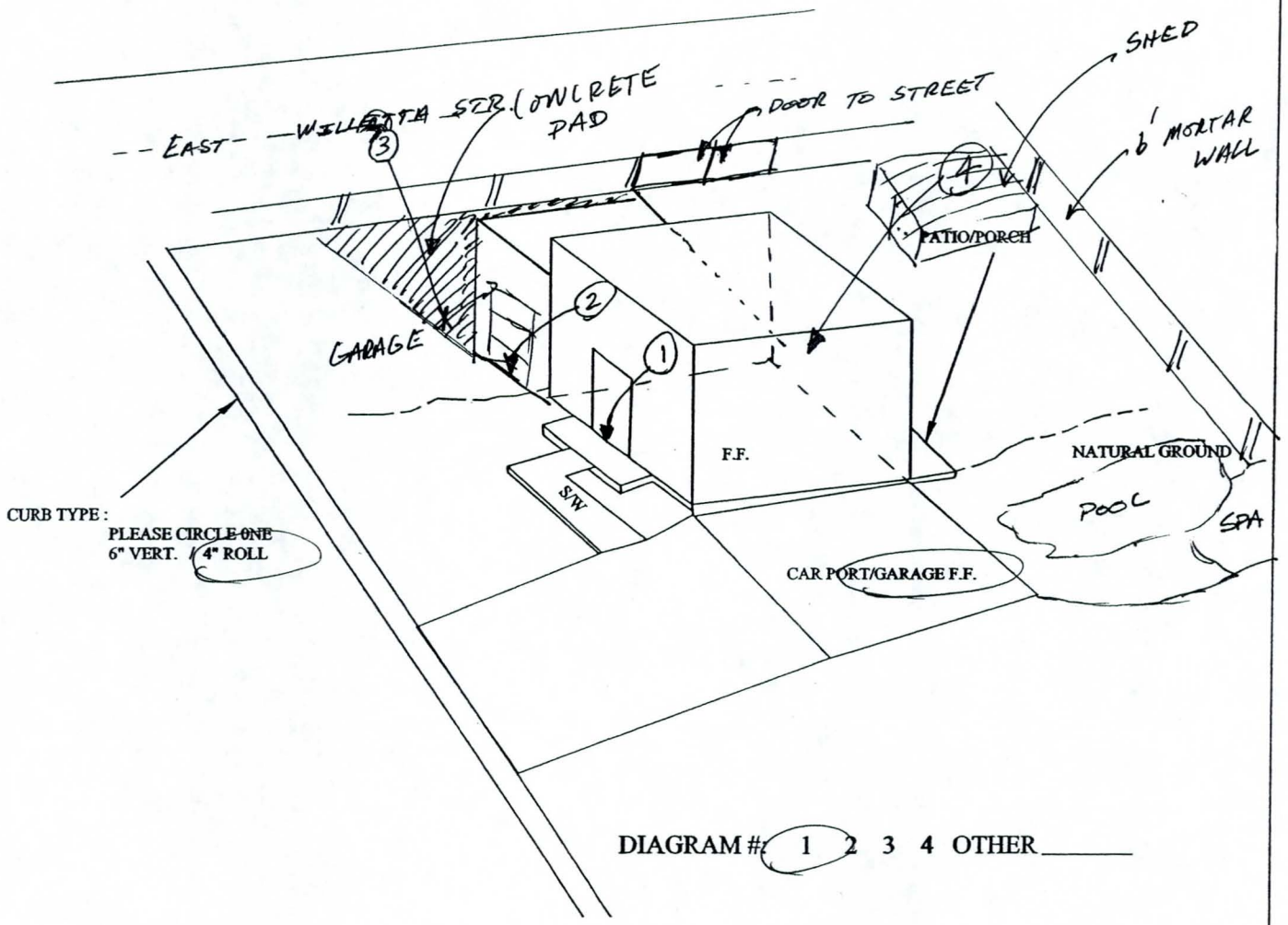

DIAGRAM #: 1 2 3 4 OTHER _____

ELEVATIONS REQUIRED:

① F.F. RESIDENCE	1138.49
② F.F. CAR PORT/GARAGE	1138.05
③ L.A.G.	1137.52
④ H.A.G.	1138.10

L.A.G. - LOWEST ADJACENT GRADE (TO F.F.)
H.A.G. - HIGHEST ADJACENT GRADE (TO F.F.)

RELAVENT NOTES FOR ENGINEER : * SWIMMING POOL, ABOVE-GROUND SPA, SMALL SHED LOCATED IN BACK YARD
* CONCRETE PAD BETWEEN SOUTH GARAGE WALL & LOT WALL

LANDMARK ENGINEERING, INC.
7310 N. 16TH STREET SUITE 285
PHOENIX, ARIZONA 85020 (602) 861-2005

COP ELEVATION CERT

LOT : 64

FIGURE

FEDERAL EMERGENCY MANAGEMENT AGENCY
NATIONAL FLOOD INSURANCE PROGRAM

ELEVATION CERTIFICATE

O.M.B. No. 3067-0077
Expires December 31, 2005

Important: Read the instructions on pages 1 - 7.

SECTION A - PROPERTY OWNER INFORMATION

For Insurance Company Use:
Policy Number
Company NAIC Number

BUILDING OWNER'S NAME
Misic, Praga

BUILDING STREET ADDRESS (Including Apt., Unit, Suite, and/or Bldg. No.) OR P.O. ROUTE AND BOX NO.
1132 N. 34th Street

CITY	STATE	ZIP CODE
Phoenix	AZ	85008

PROPERTY DESCRIPTION (Lot and Block Numbers, Tax Parcel Number, Legal Description, etc.)
Lot #70 Pacel #121-08-059

BUILDING USE (e.g., Residential, Non-residential, Addition, Accessory, etc. Use a Comments area, if necessary.)
Residential

LATITUDE/LONGITUDE (OPTIONAL) (##° - ## - ##.##" or ##.#####°)
HORIZONTAL DATUM: ☒ NAD 1927 ☐ NAD 1983
SOURCE: ☒ GPS (Type):_____ ☐ USGS Quad Map ☐ Other: _____

SECTION B - FLOOD INSURANCE RATE MAP (FIRM) INFORMATION

B1. NFIP COMMUNITY NAME & COMMUNITY NUMBER	B2. COUNTY NAME	B3. STATE
Phoenix, City of Community Number 040051	Maricopa County	AZ

B4. MAP AND PANEL NUMBER	B5. SUFFIX	B6. FIRM INDEX DATE	B7. FIRM PANEL EFFECTIVE/REVISED DATE	B8. FLOOD ZONE(S)	B9. BASE FLOOD ELEVATION(S) (Zone AO, use depth of flooding)
04013C2135	E	09/30/95	07/19/01	A	1137.29

B10. Indicate the source of the Base Flood Elevation (BFE) data or base flood depth entered in B9.
☐ FIS Profile ☐ FIRM ☐ Community Determined ☒ Other (Describe): Canal Bank

B11. Indicate the elevation datum used for the BFE in B9: ☒ NGVD 1929 ☐ NAVD 1988 ☐ Other (Describe): _____

B12. Is the building located in a Coastal Barrier Resources System (CBRS) area or Otherwise Protected Area (OPA)? ☐ Yes ☒ No Designation Date_____

SECTION C - BUILDING ELEVATION INFORMATION (SURVEY REQUIRED)

C1. Building elevations are based on: ☐ Construction Drawings* ☐ Building Under Construction* ☒ Finished Construction
*A new Elevation Certificate will be required when construction of the building is complete.

C2. Building Diagram Number 1 (Select the building diagram most similar to the building for which this certificate is being completed - see pages 6 and 7. If no diagram accurately represents the building, provide a sketch or photograph.)

C3. Elevations – Zones A1-A30, AE, AH, A (with BFE), VE, V1-V30, V (with BFE), AR, AR/A, AR/AE, AR/A1-A30, AR/AH, AR/AO
Complete Items C3.-a-i below according to the building diagram specified in Item C2. State the datum used. If the datum is different from the datum used for the BFE in Section B, convert the datum to that used for the BFE. Show field measurements and datum conversion calculation. Use the space provided or the Comments area of Section D or Section G, as appropriate, to document the datum conversion.
Datum NGVD Conversion/Comments Benchmark: Brass cap in hand hole; elevation =1138.77 ft. @ centerline intersection o f 32nd Street & McDowell Road
Elevation reference mark used C.O. Phoenix Does the elevation reference mark used appear on the FIRM? ☐ Yes ☒ No

- o a) Top of bottom floor (including basement or enclosure) 1138. 05 ft.(m)
- o b) Top of next higher floor ____. __ft.(m)
- o c) Bottom of lowest horizontal structural member (V zones only) ____. __ft.(m)
- o d) Attached garage (top of slab) 1137. 76 ft.(m)
- o e) Lowest elevation of machinery and/or equipment servicing the building (Describe in a Comments area) ____. __ft.(m)
- o f) Lowest adjacent (finished) grade (LAG) 1137 . 09 ft.(m)
- o g) Highest adjacent (finished) grade (HAG) 1137. 43 ft.(m)
- o h) No. of permanent openings (flood vents) within 1 ft. above adjacent grade _____
- o i) Total area of all permanent openings (flood vents) in C3.h _____sq. in. (sq. cm)

License Number, Embossed Seal, Signature, and Date

Registered Professional Engineer (Civil) CERTIFICATE NO. 12890 JAMES D. LEMON Date Signed 6/16/03 ARIZONA, U.S.A.

SECTION D - SURVEYOR, ENGINEER, OR ARCHITECT CERTIFICATION

This certification is to be signed and sealed by a land surveyor, engineer, or architect authorized by law to certify elevation information.
I certify that the information in Sections A, B, and C on this certificate represents my best efforts to interpret the data available.
I understand that any false statement may be punishable by fine or imprisonment under 18 U.S. Code, Section 1001.

CERTIFIER'S NAME	LICENSE NUMBER		
James D. Lemon, P.E., R.L.S.	# 12890		
TITLE	COMPANY NAME		
President	Landmark Engineering, Inc.		
ADDRESS	CITY	STATE	ZIP CODE
7310 North 16th Street, Suite #285	Phoenix	AZ	85020
SIGNATURE	DATE	TELEPHONE	
James D. Lemon	6/16/03	602.861.2005	

IMPORTANT: In these spaces, copy the corresponding information from Section A.

BUILDING STREET ADDRESS (Including Apt., Unit, Suite, and/or Bldg. No.) OR P.O. ROUTE AND BOX NO.			For Insurance Company Use:
1132 N. 34th Street			Policy Number
CITY	STATE	ZIP CODE	Company NAIC Number
Phoenix	AZ	85008	

SECTION D - SURVEYOR, ENGINEER, OR ARCHITECT CERTIFICATION (CONTINUED)

Copy both sides of this Elevation Certificate for (1) community official, (2) insurance agent/company, and (3) building owner.

COMMENTS

Homeowner was not home at time of survey for rear yard access. Landmark Engineering was unable to complete survey. Neighbor noted that homeowner had passed away recently.

☒ Check here if attachments

SECTION E - BUILDING ELEVATION INFORMATION (SURVEY NOT REQUIRED) FOR ZONE AO AND ZONE A (WITHOUT BFE)

For Zone AO and Zone A (without BFE), complete Items E1 through E4. If the Elevation Certificate is intended for use as supporting information for a LOMA or LOMR-F, Section C must be completed.

E1. Building Diagram Number _(Select the building diagram most similar to the building for which this certificate is being completed – see pages 6 and 7. If no diagram accurately represents the building, provide a sketch or photograph.)

E2. The top of the bottom floor (including basement or enclosure) of the building is __ ft.(m) __in.(cm) ☐ above or ☐ below (check one) the highest adjacent grade. (Use natural grade, if available).

E3. For Building Diagrams 6-8 with openings (see page 7), the next higher floor or elevated floor (elevation b) of the building is __ ft.(m) __in.(cm) above the highest adjacent grade. Complete items C3.h and C3.i on front of form.

E4. The top of the platform of machinery and/or equipment servicing the building is __ ft.(m) __in.(cm) ☐ above or ☐ below (check one) the highest adjacent grade. (Use natural grade, if available).

E5. For Zone AO only: If no flood depth number is available, is the top of the bottom floor elevated in accordance with the community's floodplain management ordinance?
☐ Yes ☐ No ☐ Unknown. The local official must certify this information in Section G.

SECTION F - PROPERTY OWNER (OR OWNER'S REPRESENTATIVE) CERTIFICATION

The property owner or owner's authorized representative who completes Sections A, B, C (Items C3.h and C3.i only), and E for Zone A (without a FEMA-issued or community-issued BFE) or Zone AO must sign here. *The statements in Sections A, B, C, and E are correct to the best of my knowledge.*

PROPERTY OWNER'S OR OWNER'S AUTHORIZED REPRESENTATIVE'S NAME

ADDRESS | CITY | STATE | ZIP CODE

SIGNATURE | DATE | TELEPHONE

COMMENTS

☐ Check here if attachments

SECTION G - COMMUNITY INFORMATION (OPTIONAL)

The local official who is authorized by law or ordinance to administer the community's floodplain management ordinance can complete Sections A, B, C (or E), and G of this Elevation Certificate. Complete the applicable item(s) and sign below.

G1. ☐ The information in Section C was taken from other documentation that has been signed and embossed by a licensed surveyor, engineer, or architect who is authorized by state or local law to certify elevation information. (Indicate the source and date of the elevation data in the Comments area below.)

G2. ☐ A community official completed Section E for a building located in Zone A (without a FEMA-issued or community-issued BFE) or Zone AO.

G3. ☐ The following information (Items G4-G9) is provided for community floodplain management purposes.

G4. PERMIT NUMBER	G5. DATE PERMIT ISSUED	G6. DATE CERTIFICATE OF COMPLIANCE/OCCUPANCY ISSUED

G7. This permit has been issued for: ☐ New Construction ☐ Substantial Improvement

G8. Elevation of as-built lowest floor (including basement) of the building is: ____. __ft.(m) Datum: _____

G9. BFE or (in Zone AO) depth of flooding at the building site is: ____. __ ft.(m) Datum: _____

LOCAL OFFICIAL'S NAME | TITLE

COMMUNITY NAME | TELEPHONE

SIGNATURE | DATE

COMMENTS

☐ Check here if attachments

LOT NUMBER : 70 (SEE MAP)

DATE : 08-29-02

PLEASE INDICATE APPROX. MEASUREMENT LOCATION

ADDRESS : 1132 34nd St. PHX AZ 85008

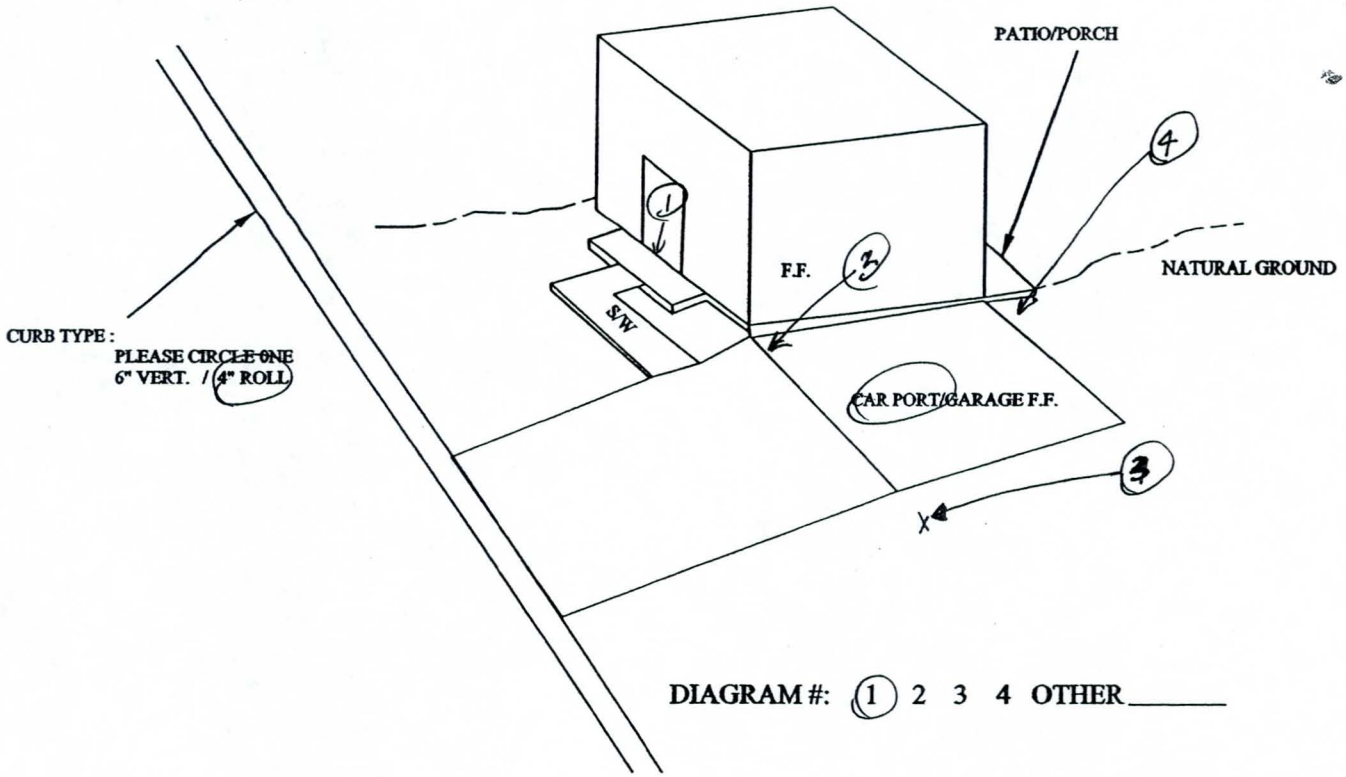

DIAGRAM #: 1 2 3 4 OTHER_____

ELEVATIONS REQUIRED:

1 F.F. RESIDENCE	1138.05
2 F.F. CAR PORT/GARAGE	1137.76
3 L.A.G.	1137.09
4 H.A.G.	1137.43

L.A.G. - LOWEST ADJACENT GRADE (TO F.F.)
H.A.G. - HIGHEST ADJACENT GRADE (TO F.F.)

RELAVENT NOTES FOR ENGINEER : *EMPTY POOL LOCATED IN BACKYARD

LANDMARK ENGINEERING, INC.
7310 N. 16TH STREET SUITE 285
PHOENIX, ARIZONA 85020 (602) 861-2005

COP ELEVATION CERT
LOT : 70

FIGURE

FEDERAL EMERGENCY MANAGEMENT AGENCY
NATIONAL FLOOD INSURANCE PROGRAM

ELEVATION CERTIFICATE

O.M.B. No. 3067-0077
Expires December 31, 2005

Important: Read the instructions on pages 1 - 7.

SECTION A - PROPERTY OWNER INFORMATION

For Insurance Company Use:
Policy Number
Company NAIC Number

BUILDING OWNER'S NAME
Guzman, Robert A. / Sandra

BUILDING STREET ADDRESS (Including Apt., Unit, Suite, and/or Bldg. No.) OR P.O. ROUTE AND BOX NO.
1127 N. 34th Street

CITY	STATE	ZIP CODE
Phoenix	AZ	85008

PROPERTY DESCRIPTION (Lot and Block Numbers, Tax Parcel Number, Legal Description, etc.)
Lot #78 Pacel #121-08-068

BUILDING USE (e.g., Residential, Non-residential, Addition, Accessory, etc. Use a Comments area, if necessary.)
Residential

LATITUDE/LONGITUDE (OPTIONAL) (##° - ## - ##.##" or ##.#####°)
HORIZONTAL DATUM: ☒ NAD 1927 ☐ NAD 1983
SOURCE: ☒ GPS (Type):____ ☐ USGS Quad Map ☐ Other: ____

SECTION B - FLOOD INSURANCE RATE MAP (FIRM) INFORMATION

B1. NFIP COMMUNITY NAME & COMMUNITY NUMBER	B2. COUNTY NAME	B3. STATE
Phoenix, City of Community Number 040051	Maricopa County	AZ

B4. MAP AND PANEL NUMBER	B5. SUFFIX	B6. FIRM INDEX DATE	B7. FIRM PANEL EFFECTIVE/REVISED DATE	B8. FLOOD ZONE(S)	B9. BASE FLOOD ELEVATION(S) (Zone AO, use depth of flooding)
04013C2135	E	09/30/95	07/19/01	A	1137.55

B10. Indicate the source of the Base Flood Elevation (BFE) data or base flood depth entered in B9.
☐ FIS Profile ☐ FIRM ☐ Community Determined ☒ Other (Describe): Canal Bank

B11. Indicate the elevation datum used for the BFE in B9: ☒ NGVD 1929 ☐ NAVD 1988 ☐ Other (Describe): ____

B12. Is the building located in a Coastal Barrier Resources System (CBRS) area or Otherwise Protected Area (OPA)? ☐ Yes ☒ No Designation Date____

SECTION C - BUILDING ELEVATION INFORMATION (SURVEY REQUIRED)

C1. Building elevations are based on: ☐ Construction Drawings* ☐ Building Under Construction* ☒ Finished Construction
*A new Elevation Certificate will be required when construction of the building is complete.

C2. Building Diagram Number 1 (Select the building diagram most similar to the building for which this certificate is being completed - see pages 6 and 7. If no diagram accurately represents the building, provide a sketch or photograph.)

C3. Elevations – Zones A1-A30, AE, AH, A (with BFE), VE, V1-V30, V (with BFE), AR, AR/A, AR/AE, AR/A1-A30, AR/AH, AR/AO
Complete Items C3.-a-i below according to the building diagram specified in Item C2. State the datum used. If the datum is different from the datum used for the BFE in Section B, convert the datum to that used for the BFE. Show field measurements and datum conversion calculation. Use the space provided or the Comments area of Section D or Section G, as appropriate, to document the datum conversion.
Datum NGVD Conversion/Comments Benchmark: Brass cap in hand hole; elevation =1138.77 ft. @ centerline intersection o f 32nd Street & McDowell Road
Elevation reference mark used C.O. Phoenix Does the elevation reference mark used appear on the FIRM? ☐ Yes ☒ No

- o a) Top of bottom floor (including basement or enclosure) 1138. 08 ft.(m)
- o b) Top of next higher floor ____. __ft.(m)
- o c) Bottom of lowest horizontal structural member (V zones only) ____. __ft.(m)
- o d) Attached garage (top of slab) 1137. 75 ft.(m)
- o e) Lowest elevation of machinery and/or equipment servicing the building (Describe in a Comments area) ____. __ft.(m)
- o f) Lowest adjacent (finished) grade (LAG) 1137. 13 ft.(m)
- o g) Highest adjacent (finished) grade (HAG) 1137. 54 ft.(m)
- o h) No. of permanent openings (flood vents) within 1 ft. above adjacent grade ____
- o i) Total area of all permanent openings (flood vents) in C3.h ____sq. in. (sq. cm)

License Number, Embossed Seal, Signature, and Date

Registered Professional Engineer (Civil) CERTIFICATE NO. 12890 JAMES D. LEMON Date Signed 6/16/03 ARIZONA, U.S.A.

SECTION D - SURVEYOR, ENGINEER, OR ARCHITECT CERTIFICATION

This certification is to be signed and sealed by a land surveyor, engineer, or architect authorized by law to certify elevation information.
I certify that the information in Sections A, B, and C on this certificate represents my best efforts to interpret the data available.
I understand that any false statement may be punishable by fine or imprisonment under 18 U.S. Code, Section 1001.

CERTIFIER'S NAME	LICENSE NUMBER	
James D. Lemon, P.E., R.L.S.	# 12890	
TITLE	COMPANY NAME	
President	Landmark Engineering, Inc.	

ADDRESS	CITY	STATE	ZIP CODE
7310 North 16th Street, Suite #285	Phoenix	AZ	85020

SIGNATURE	DATE	TELEPHONE
	6/16/03	602.861.2005

IMPORTANT: In these spaces, copy the corresponding information from Section A.

BUILDING STREET ADDRESS (Including Apt., Unit, Suite, and/or Bldg. No.) OR P.O. ROUTE AND BOX NO.			For Insurance Company Use:
1127 N. 34th Street			Policy Number
CITY	STATE	ZIP CODE	Company NAIC Number
Phoenix	AZ	85008	

SECTION D - SURVEYOR, ENGINEER, OR ARCHITECT CERTIFICATION (CONTINUED)

Copy both sides of this Elevation Certificate for (1) community official, (2) insurance agent/company, and (3) building owner.

COMMENTS

☒ Check here if attachments

SECTION E - BUILDING ELEVATION INFORMATION (SURVEY NOT REQUIRED) FOR ZONE AO AND ZONE A (WITHOUT BFE)

For Zone AO and Zone A (without BFE), complete Items E1 through E4. If the Elevation Certificate is intended for use as supporting information for a LOMA or LOMR-F, Section C must be completed.

E1. Building Diagram Number _(Select the building diagram most similar to the building for which this certificate is being completed – see pages 6 and 7. If no diagram accurately represents the building, provide a sketch or photograph.)

E2. The top of the bottom floor (including basement or enclosure) of the building is __ ft.(m) __in.(cm) ☐ above or ☐ below (check one) the highest adjacent grade. (Use natural grade, if available).

E3. For Building Diagrams 6-8 with openings (see page 7), the next higher floor or elevated floor (elevation b) of the building is __ ft.(m) __in.(cm) above the highest adjacent grade. Complete items C3.h and C3.i on front of form.

E4. The top of the platform of machinery and/or equipment servicing the building is __ ft.(m) __in.(cm) ☐ above or ☐ below (check one) the highest adjacent grade. (Use natural grade, if available).

E5. For Zone AO only: If no flood depth number is available, is the top of the bottom floor elevated in accordance with the community's floodplain management ordinance?
☐ Yes ☐ No ☐ Unknown. The local official must certify this information in Section G.

SECTION F - PROPERTY OWNER (OR OWNER'S REPRESENTATIVE) CERTIFICATION

The property owner or owner's authorized representative who completes Sections A, B, C (Items C3.h and C3.i only), and E for Zone A (without a FEMA-issued or community-issued BFE) or Zone AO must sign here. *The statements in Sections A, B, C, and E are correct to the best of my knowledge.*

PROPERTY OWNER'S OR OWNER'S AUTHORIZED REPRESENTATIVE'S NAME

ADDRESS | CITY | STATE | ZIP CODE

SIGNATURE | DATE | TELEPHONE

COMMENTS

☐ Check here if attachments

SECTION G - COMMUNITY INFORMATION (OPTIONAL)

The local official who is authorized by law or ordinance to administer the community's floodplain management ordinance can complete Sections A, B, C (or E), and G of this Elevation Certificate. Complete the applicable item(s) and sign below.

G1. ☐ The information in Section C was taken from other documentation that has been signed and embossed by a licensed surveyor, engineer, or architect who is authorized by state or local law to certify elevation information. (Indicate the source and date of the elevation data in the Comments area below.)

G2. ☐ A community official completed Section E for a building located in Zone A (without a FEMA-issued or community-issued BFE) or Zone AO.

G3. ☐ The following information (Items G4-G9) is provided for community floodplain management purposes.

G4. PERMIT NUMBER	G5. DATE PERMIT ISSUED	G6. DATE CERTIFICATE OF COMPLIANCE/OCCUPANCY ISSUED

G7. This permit has been issued for: ☐ New Construction ☐ Substantial Improvement

G8. Elevation of as-built lowest floor (including basement) of the building is: ____. __ft.(m) Datum: ____

G9. BFE or (in Zone AO) depth of flooding at the building site is: ____. __ ft.(m) Datum: ____

LOCAL OFFICIAL'S NAME | TITLE

COMMUNITY NAME | TELEPHONE

SIGNATURE | DATE

COMMENTS

☐ Check here if attachments

LOT NUMBER : 78 (SEE MAP)

DATE : 08-29-02

PLEASE INDICATE APPROX. MEASUREMENT LOCATION

ADDRESS : 1127 NORTH 34TH STREET
PHX AZ 85008

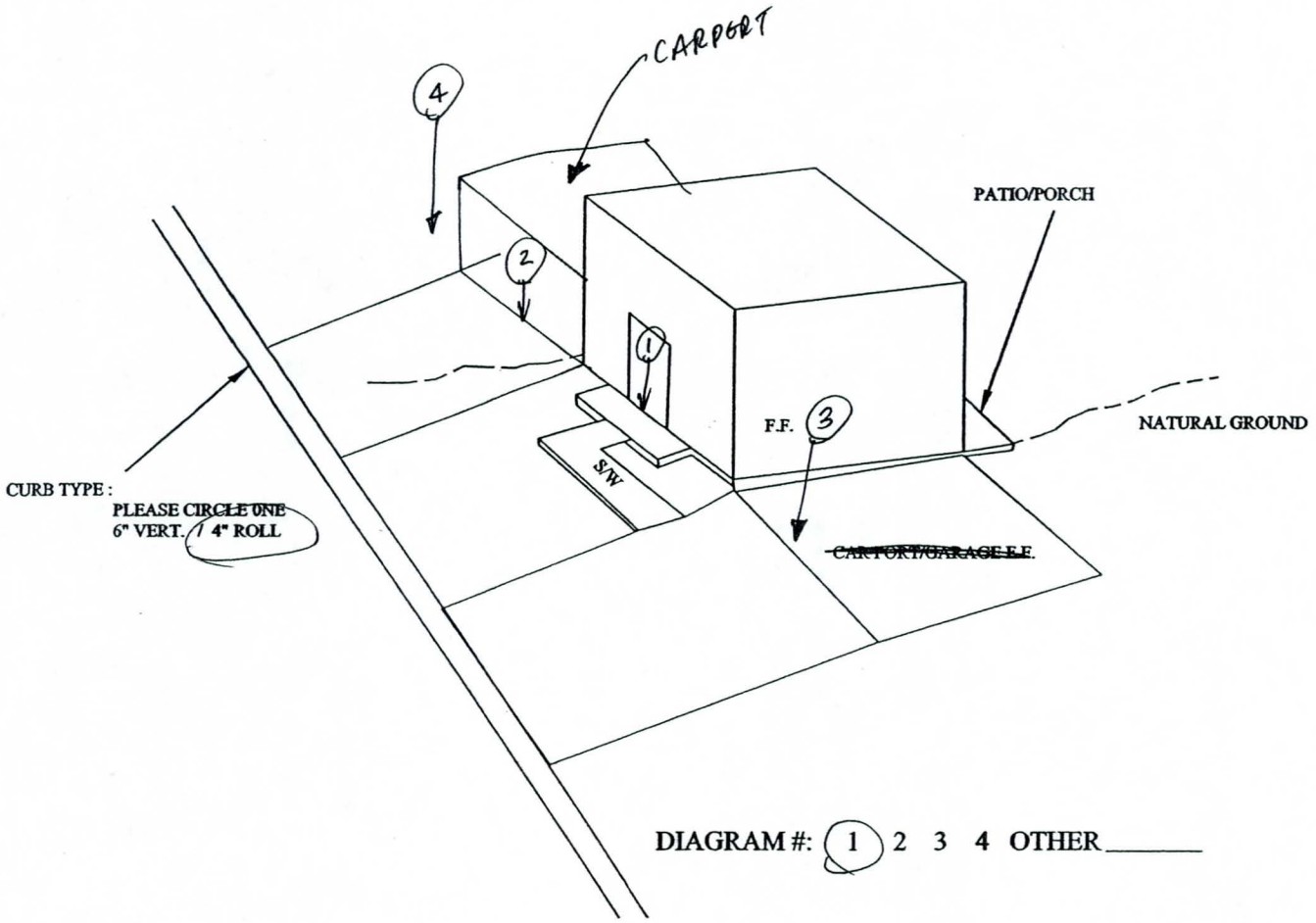

DIAGRAM #: (1) 2 3 4 OTHER_____

ELEVATIONS REQUIRED:

(1) F.F. RESIDENCE	1138.08
(2) F.F. CAR PORT/GARAGE	1137.75
(3) L.A.G.	1137.13
(4) H.A.G.	1137.54

L.A.G. - LOWEST ADJACENT GRADE (TO F.F.)
H.A.G. - HIGHEST ADJACENT GRADE (TO F.F.)

RELAVENT NOTES FOR ENGINEER : * MORTAR WALL SURROUNDS LOT
* CARPORT ON NORTH SIDE OF RESIDENCE

LANDMARK ENGINEERING, INC.
7310 N. 16TH STREET SUITE 285
PHOENIX, ARIZONA 85020 (602) 861-2005

COP ELEVATION CERT
LOT : 78

FIGURE

FEDERAL EMERGENCY MANAGEMENT AGENCY
NATIONAL FLOOD INSURANCE PROGRAM

ELEVATION CERTIFICATE

O.M.B. No. 3067-0077
Expires December 31, 2005

Important: Read the instructions on pages 1 - 7.

SECTION A - PROPERTY OWNER INFORMATION

For Insurance Company Use:
Policy Number
Company NAIC Number

BUILDING OWNER'S NAME
Rivera, Robert J. / Bernice A.

BUILDING STREET ADDRESS (Including Apt., Unit, Suite, and/or Bldg. No.) OR P.O. ROUTE AND BOX NO.
1131 N. 34th Street

CITY	STATE	ZIP CODE
Phoenix	AZ	85008

PROPERTY DESCRIPTION (Lot and Block Numbers, Tax Parcel Number, Legal Description, etc.)
Lot #79 Pacel #121-08-069

BUILDING USE (e.g., Residential, Non-residential, Addition, Accessory, etc. Use a Comments area, if necessary.)
Residential

LATITUDE/LONGITUDE (OPTIONAL) (##° - ## - ##.##" or ##.#####°)
HORIZONTAL DATUM: ☒ NAD 1927 ☐ NAD 1983
SOURCE: ☒ GPS (Type):____ ☐ USGS Quad Map ☐ Other: ____

SECTION B - FLOOD INSURANCE RATE MAP (FIRM) INFORMATION

B1. NFIP COMMUNITY NAME & COMMUNITY NUMBER	B2. COUNTY NAME	B3. STATE
Phoenix, City of Community Number 040051	Maricopa County	AZ

B4. MAP AND PANEL NUMBER	B5. SUFFIX	B6. FIRM INDEX DATE	B7. FIRM PANEL EFFECTIVE/REVISED DATE	B8. FLOOD ZONE(S)	B9. BASE FLOOD ELEVATION(S) (Zone AO, use depth of flooding)
04013C2135	E	09/30/95	07/19/01	A	1137.51

B10. Indicate the source of the Base Flood Elevation (BFE) data or base flood depth entered in B9.
☐ FIS Profile ☐ FIRM ☐ Community Determined ☒ Other (Describe): Canal Bank
B11. Indicate the elevation datum used for the BFE in B9: ☒ NGVD 1929 ☐ NAVD 1988 ☐ Other (Describe): ____
B12. Is the building located in a Coastal Barrier Resources System (CBRS) area or Otherwise Protected Area (OPA)? ☐ Yes ☒ No Designation Date____

SECTION C - BUILDING ELEVATION INFORMATION (SURVEY REQUIRED)

C1. Building elevations are based on: ☐ Construction Drawings* ☐ Building Under Construction* ☒ Finished Construction
*A new Elevation Certificate will be required when construction of the building is complete.

C2. Building Diagram Number 1 (Select the building diagram most similar to the building for which this certificate is being completed - see pages 6 and 7. If no diagram accurately represents the building, provide a sketch or photograph.)

C3. Elevations – Zones A1-A30, AE, AH, A (with BFE), VE, V1-V30, V (with BFE), AR, AR/A, AR/AE, AR/A1-A30, AR/AH, AR/AO
Complete Items C3.-a-i below according to the building diagram specified in Item C2. State the datum used. If the datum is different from the datum used for the BFE in Section B, convert the datum to that used for the BFE. Show field measurements and datum conversion calculation. Use the space provided or the Comments area of Section D or Section G, as appropriate, to document the datum conversion.
Datum NGVD Conversion/Comments Benchmark: Brass cap in hand hole; elevation =1138.77 ft. @ centerline intersection o f 32nd Street & McDowell Road
Elevation reference mark used C.O. Phoenix Does the elevation reference mark used appear on the FIRM? ☐ Yes ☒ No

- o a) Top of bottom floor (including basement or enclosure) 1138. 23 ft.(m)
- o b) Top of next higher floor ____. __ft.(m)
- o c) Bottom of lowest horizontal structural member (V zones only) ____. __ft.(m)
- o d) Attached garage (top of slab) 1137. 88 ft.(m)
- o e) Lowest elevation of machinery and/or equipment servicing the building (Describe in a Comments area) ____. __ft.(m)
- o f) Lowest adjacent (finished) grade (LAG) 1137 . 61 ft.(m)
- o g) Highest adjacent (finished) grade (HAG) 1137. 91 ft.(m)
- o h) No. of permanent openings (flood vents) within 1 ft. above adjacent grade ____
- o i) Total area of all permanent openings (flood vents) in C3.h ____sq. in. (sq. cm)

License Number, Embossed Seal, Signature, and Date

Registered Professional Engineer (Civil)
CERTIFICATE NO.
12890
JAMES D.
LEMON
Date Signed 6/16/03
ARIZONA, U.S.A.

SECTION D - SURVEYOR, ENGINEER, OR ARCHITECT CERTIFICATION

This certification is to be signed and sealed by a land surveyor, engineer, or architect authorized by law to certify elevation information.
I certify that the information in Sections A, B, and C on this certificate represents my best efforts to interpret the data available.
I understand that any false statement may be punishable by fine or imprisonment under 18 U.S. Code, Section 1001.

CERTIFIER'S NAME	LICENSE NUMBER		
James D. Lemon, P.E., R.L.S.	# 12890		
TITLE	COMPANY NAME		
President	Landmark Engineering, Inc.		
ADDRESS	CITY	STATE	ZIP CODE
7310 North 16th Street, Suite #285	Phoenix	AZ	85020
SIGNATURE	DATE	TELEPHONE	
	6/16/03	602.861.2005	

IMPORTANT: In these spaces, copy the corresponding information from Section A.

For Insurance Company Use:

BUILDING STREET ADDRESS (Including Apt., Unit, Suite, and/or Bldg. No.) OR P.O. ROUTE AND BOX NO.			Policy Number
1131 N. 34th Street			
CITY	STATE	ZIP CODE	Company NAIC Number
Phoenix	AZ	85008	

SECTION D - SURVEYOR, ENGINEER, OR ARCHITECT CERTIFICATION (CONTINUED)

Copy both sides of this Elevation Certificate for (1) community official, (2) insurance agent/company, and (3) building owner.

COMMENTS

Homeowner was not home at time of survey for rear yard access. Landmark Engineering was unable to complete survey. Neighbor noted that homeowner had passed away recently.

☒ Check here if attachments

SECTION E - BUILDING ELEVATION INFORMATION (SURVEY NOT REQUIRED) FOR ZONE AO AND ZONE A (WITHOUT BFE)

For Zone AO and Zone A (without BFE), complete Items E1 through E4. If the Elevation Certificate is intended for use as supporting information for a LOMA or LOMR-F, Section C must be completed.

E1. Building Diagram Number _(Select the building diagram most similar to the building for which this certificate is being completed – see pages 6 and 7. If no diagram accurately represents the building, provide a sketch or photograph.)

E2. The top of the bottom floor (including basement or enclosure) of the building is __ ft.(m) __in.(cm) ☐ above or ☐ below (check one) the highest adjacent grade. (Use natural grade, if available).

E3. For Building Diagrams 6-8 with openings (see page 7), the next higher floor or elevated floor (elevation b) of the building is __ ft.(m) __in.(cm) above the highest adjacent grade. Complete items C3.h and C3.i on front of form.

E4. The top of the platform of machinery and/or equipment servicing the building is __ ft.(m) __in.(cm) ☐ above or ☐ below (check one) the highest adjacent grade. (Use natural grade, if available).

E5. For Zone AO only: If no flood depth number is available, is the top of the bottom floor elevated in accordance with the community's floodplain management ordinance?
☐ Yes ☐ No ☐ Unknown. The local official must certify this information in Section G.

SECTION F - PROPERTY OWNER (OR OWNER'S REPRESENTATIVE) CERTIFICATION

The property owner or owner's authorized representative who completes Sections A, B, C (Items C3.h and C3.i only), and E for Zone A (without a FEMA-issued or community-issued BFE) or Zone AO must sign here. *The statements in Sections A, B, C, and E are correct to the best of my knowledge.*

PROPERTY OWNER'S OR OWNER'S AUTHORIZED REPRESENTATIVE'S NAME

ADDRESS | CITY | STATE | ZIP CODE

SIGNATURE | DATE | TELEPHONE

COMMENTS

☐ Check here if attachments

SECTION G - COMMUNITY INFORMATION (OPTIONAL)

The local official who is authorized by law or ordinance to administer the community's floodplain management ordinance can complete Sections A, B, C (or E), and G of this Elevation Certificate. Complete the applicable item(s) and sign below.

G1. ☐ The information in Section C was taken from other documentation that has been signed and embossed by a licensed surveyor, engineer, or architect who is authorized by state or local law to certify elevation information. (Indicate the source and date of the elevation data in the Comments area below.)

G2. ☐ A community official completed Section E for a building located in Zone A (without a FEMA-issued or community-issued BFE) or Zone AO.

G3. ☐ The following information (Items G4-G9) is provided for community floodplain management purposes.

G4. PERMIT NUMBER	G5. DATE PERMIT ISSUED	G6. DATE CERTIFICATE OF COMPLIANCE/OCCUPANCY ISSUED

G7. This permit has been issued for: ☐ New Construction ☐ Substantial Improvement

G8. Elevation of as-built lowest floor (including basement) of the building is: ____. __ft.(m) Datum: _____

G9. BFE or (in Zone AO) depth of flooding at the building site is: ____. __ ft.(m) Datum: _____

LOCAL OFFICIAL'S NAME | TITLE

COMMUNITY NAME | TELEPHONE

SIGNATURE | DATE

COMMENTS

☐ Check here if attachments

LOT NUMBER : 79 (SEE MAP)

DATE : 08-29-02

PLEASE INDICATE APPROX. MEASUREMENT LOCATION

ADDRESS : 1131 NORTH 34TH STREET
PHX AZ 85008

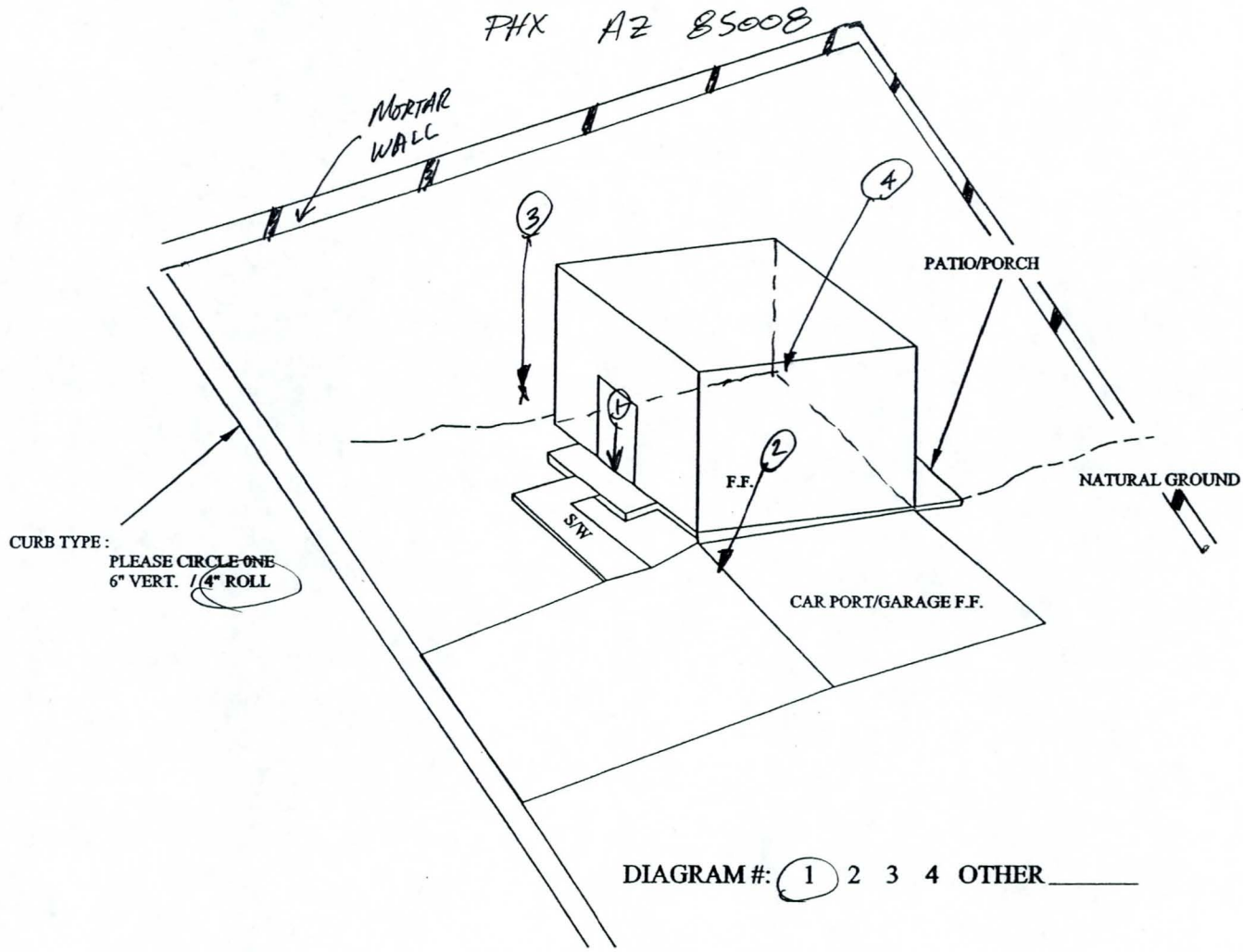

DIAGRAM #: (1) 2 3 4 OTHER _____

ELEVATIONS REQUIRED:

(1) F.F. RESIDENCE	1138.23
(2) F.F. CAR PORT/GARAGE	1137.88
(3) L.A.G.	1137.61
(4) H.A.G.	1137.91

L.A.G. - LOWEST ADJACENT GRADE (TO F.F.)
H.A.G. - HIGHEST ADJACENT GRADE (TO F.F.)

RELAVENT NOTES FOR ENGINEER : A/C UNIT ON TOP OF ROOF

LANDMARK ENGINEERING, INC.
7310 N. 16TH STREET SUITE 285
PHOENIX, ARIZONA 85020 (602) 861-2005

COP ELEVATION CERT

LOT : 79

FIGURE

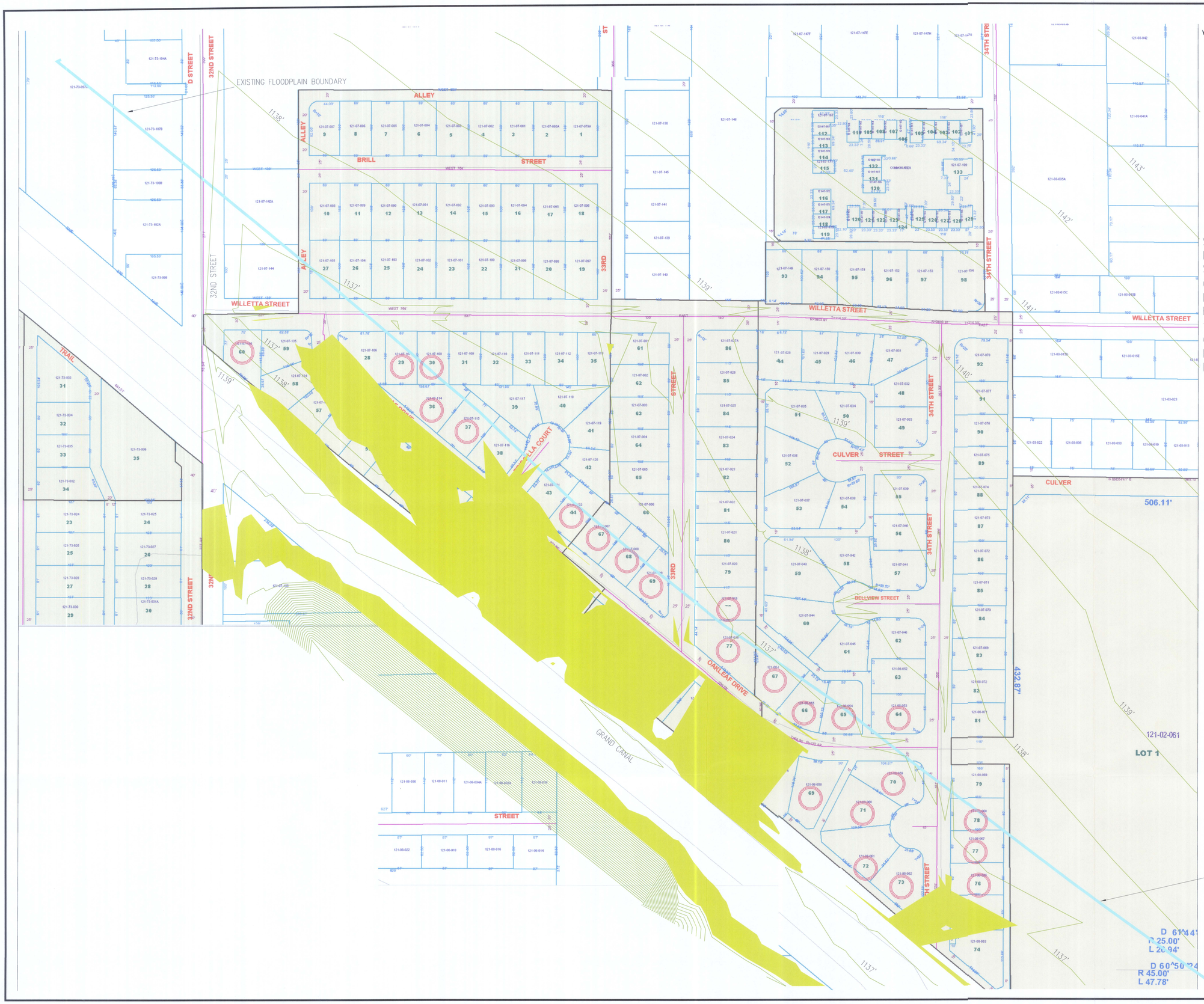

REVISIONS		
NO.	DESCRIPTION/DATE	BY

LANDMARK ENGINEERING, INC.
7310 N. 16th STREET SUITE 285
PHOENIX, ARIZONA 85020 (602) 861-2005

RECOMMENDATION FOR ELEVATION CERTIFICATE

FLOODPLAIN CERTIFICATE PROGRAM
ST83130143
PHOENIX, ARIZONA
EXHIBIT 1

EXHIBIT 1

KEY MAP

JOB NO.	01094
DESIGNED	—
DRAWN	—
ACAD FILE	—
CHECKED	—
DATE	01-03-03

1 OF 2 SHEETS

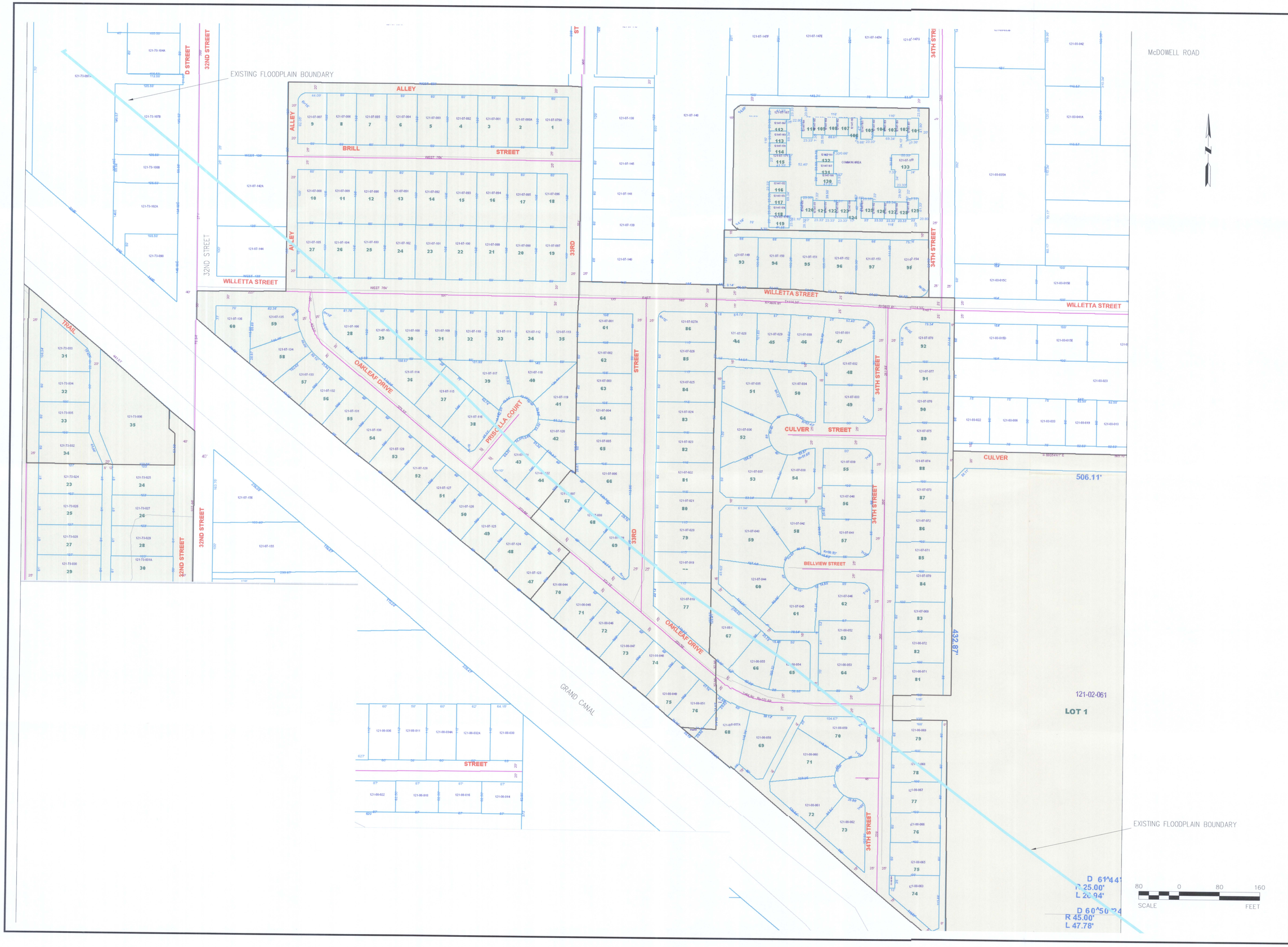

REVISIONS		
NO.	DESCRIPTION/DATE	BY

LANDMARK ENGINEERING, INC.
7310 N. 16th STREET SUITE 285
PHOENIX, ARIZONA 85020 (602) 861-2005

ADDRESS MAP
FLOODPLAIN CERTIFICATE PROGRAM

S7831,301.43
PHOENIX, ARIZONA
EXHIBIT 2

EXHIBIT 2

KEY MAP

JOB NO.	01094
DESIGNED	—
DRAWN	—
ACAD FILE	—
CHECKED	—
DATE	01-03-03

2 OF 2 SHEETS

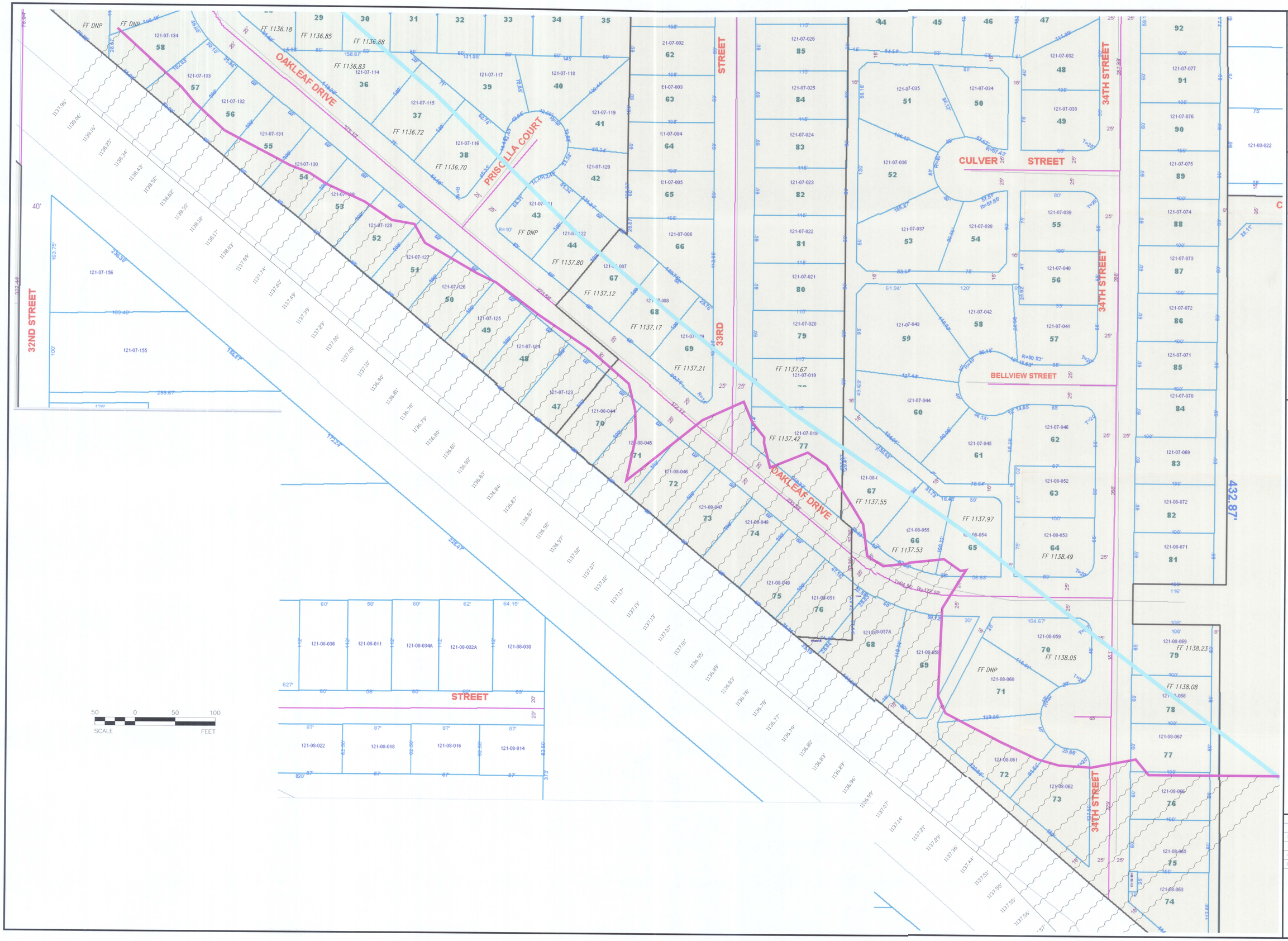

REVISIONS

NO.	DESCRIPTION/DATE	BY

LANDMARK ENGINEERING INC
7310 North 16th Street
Suite 285
Phoenix, Arizona 85020
602.861.2005

BASE FLOOD & F.F. ELEVATIONS
FLOODPLAIN CERTIFICATE PROGRAM

ST83130143
PHOENIX, ARIZONA
EXHIBIT 3

JOB NO.	01094
DESIGNED	
DRAWN	
ACAD FILE	FFELEV
CHECKED	
DATE	02-03-03

EXHIBIT 3