METRO

DESIGN CRITERIA MANUAL

JANUARY 2007

Metro Light Rail Transit Projects

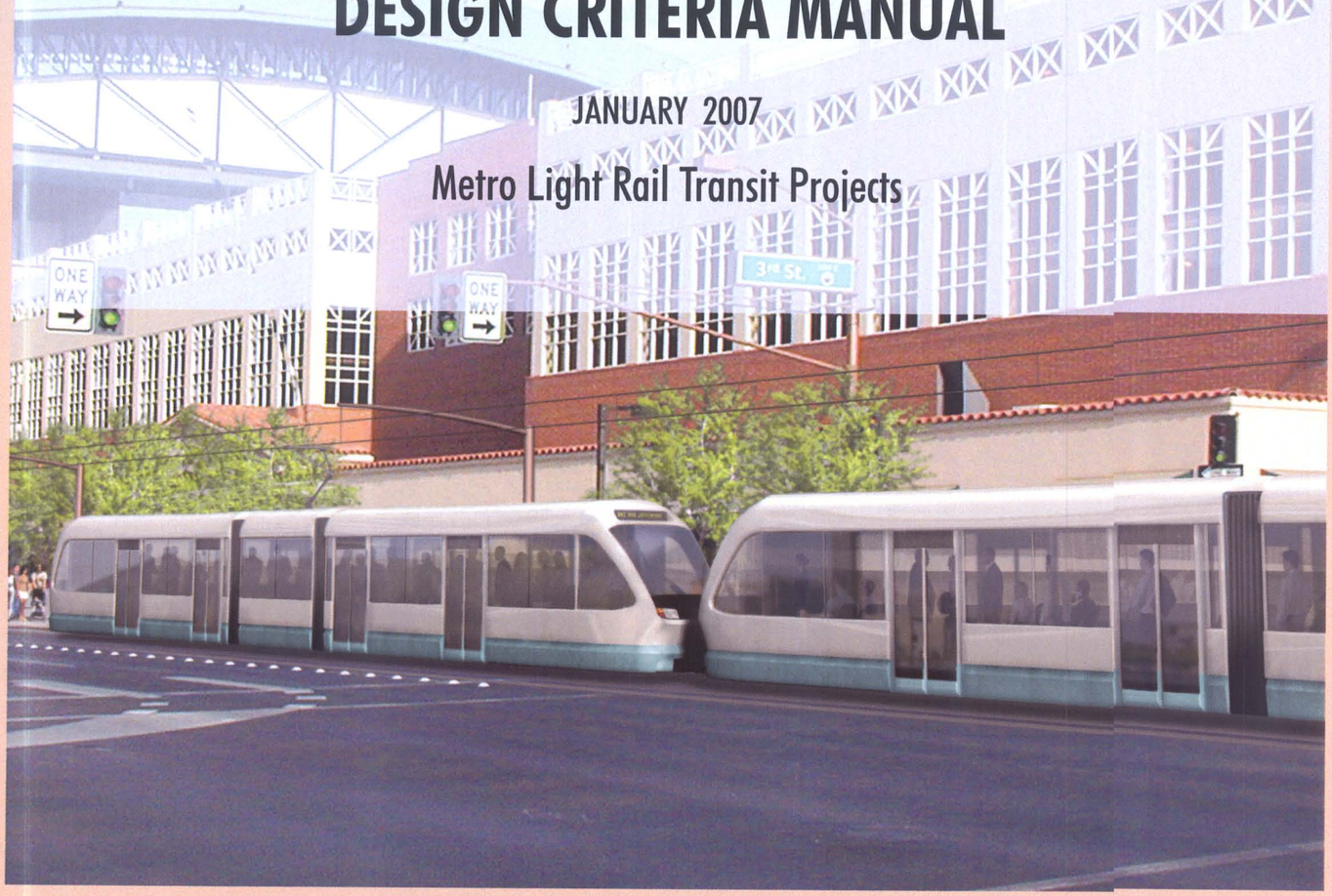

MT 07317

METRO

TRANSMITTAL

CONTROLLED DOCUMENT

Instructions for Design Criteria Manual Update

August 2007 Update

DATE: August 3, 2007

FROM: Lisa Alvarado – Metro Document Control

SUBJECT: CONTROLLED COPY DISTRIBUTION

The attached Controlled Document has been assigned to you and consists of the most recent revision to the Design Criteria Manual. Any subsequent revisions to this document that have been approved by Valley Metro Rail will be transmitted to you.

You are responsible for updating your personally assigned copy and maintaining the document in current status.

The enclosed revision record indicates the pages revised herewith. The attached items REPLACE previously distributed pages or sections with the same page/procedure number. Those pages and/or sections should be removed from your book and the new pages/sections inserted in your book in the appropriate order. Please discard the removed items. (The preceding paragraph does not apply to the initial [Rev 0] distribution of a document. Or to the distribution of a new document in its entirety)

Please sign and return the attached receipt to Lisa Alvarado in Document Control. If you do not wish to maintain this document, please return the document to Mary Denson in Document Control immediately and fill out the attached receipt accordingly.

If you have any questions, please contact Document Control at 602.495.8202.

Attachments: Design Criteria Manual updates & Controlled Document Receipt

TRANSMITTAL
CONTROLLED DOCUMENT

Design Criteria Manual Rev: FINAL
January 2007

DATE: March 2, 2007

To: Kelli Sertich

CONTROL NO: 463

FROM: Tami Delgado – Document Control

SUBJECT: CONTROLLED COPY DISTRIBUTION

The attached Controlled Document has been assigned to you and consists of the most recent revision to the Design Criteria Manual. Any subsequent revisions to this document that have been approved by Valley Metro Rail will be transmitted to you.

You are responsible for updating your personally assigned copy and maintaining the document in current status.

The enclosed revision record indicates the pages revised herewith. The attached items REPLACE previously distributed pages or sections with the same page/procedure number. Those pages and/or sections should be removed from your book and the new pages/sections inserted in your book in the appropriate order. Please discard the removed items. (The preceding paragraph does not apply to the initial [Rev 0] distribution of a document. Or to the distribution of a new document in its entirety)

Please sign and return the attached receipt to Mary Denson in Document Control. If you do not wish to maintain this document, please return the document to Mary Denson in Document Control immediately and fill out the attached receipt accordingly.

If you have any questions, please contact Document Control at 602.495.8202.

Attachments: Design Criteria Manual Rev: FINAL
Controlled Document Receipt

. SELECT FOI

Valley Metro
Smartmove

PROVIDING PUBLIC TRANSPORTATION
ALTERNATIVES FOR THE GREATER
PHOENIX METRO AREA

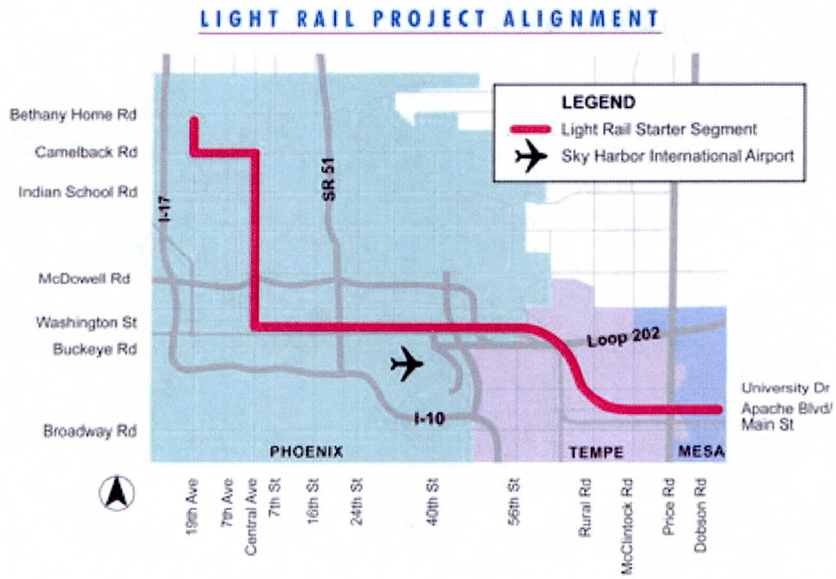

Alignment Maps

METRO Light Rail Starter Line
Phoenix Alignment
Tempe/Mesa Alignment
Line Section 1
Line Section 2
Line Section 3
Line Section 4
Line Section 5
Corridor Extensions

© Copyright 2

LIGHT RAIL STARTER SEGMENT

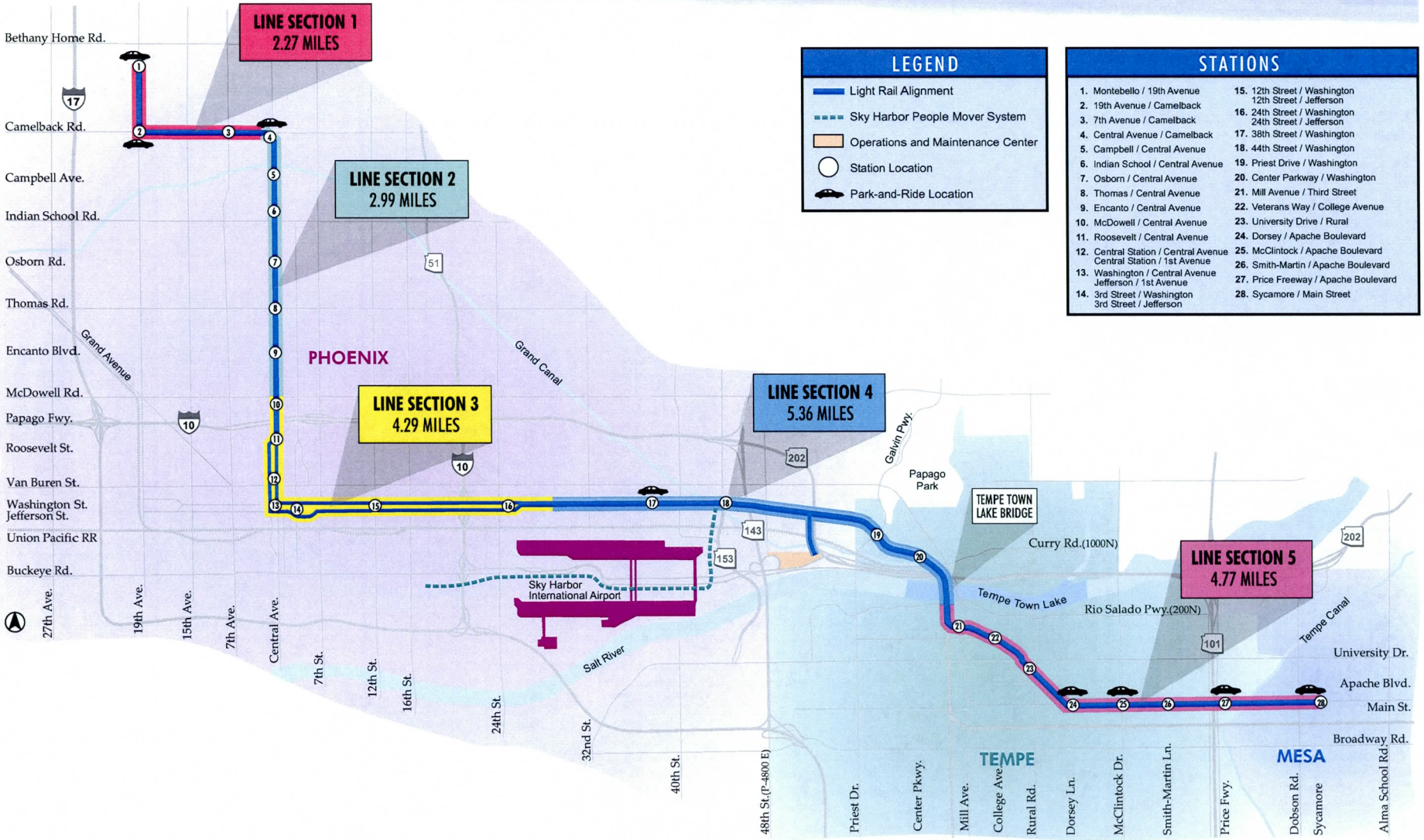

PHOENIX ALIGNMENT

TEMPE/MESA ALIGNMENT

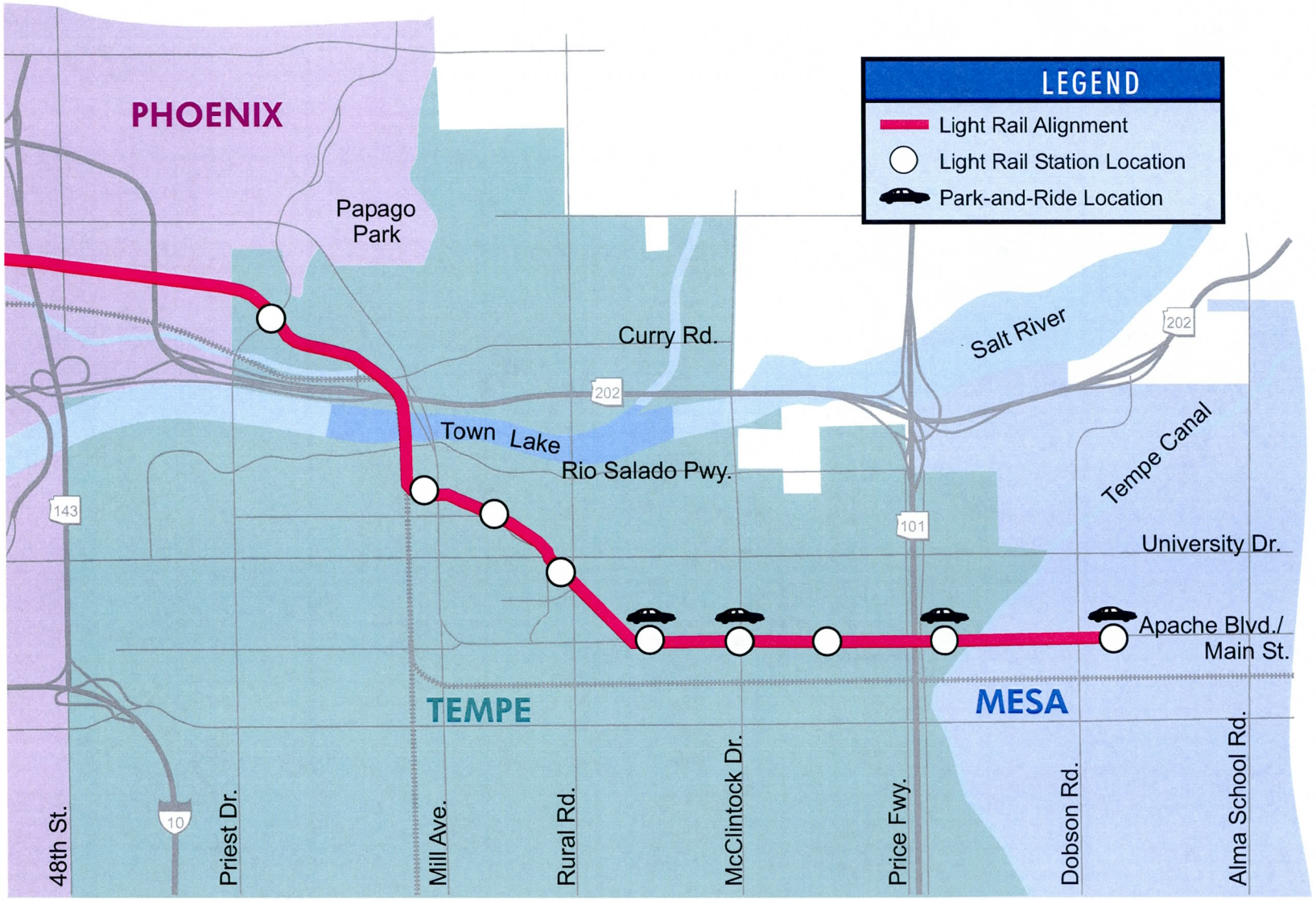

LINE SECTION 1

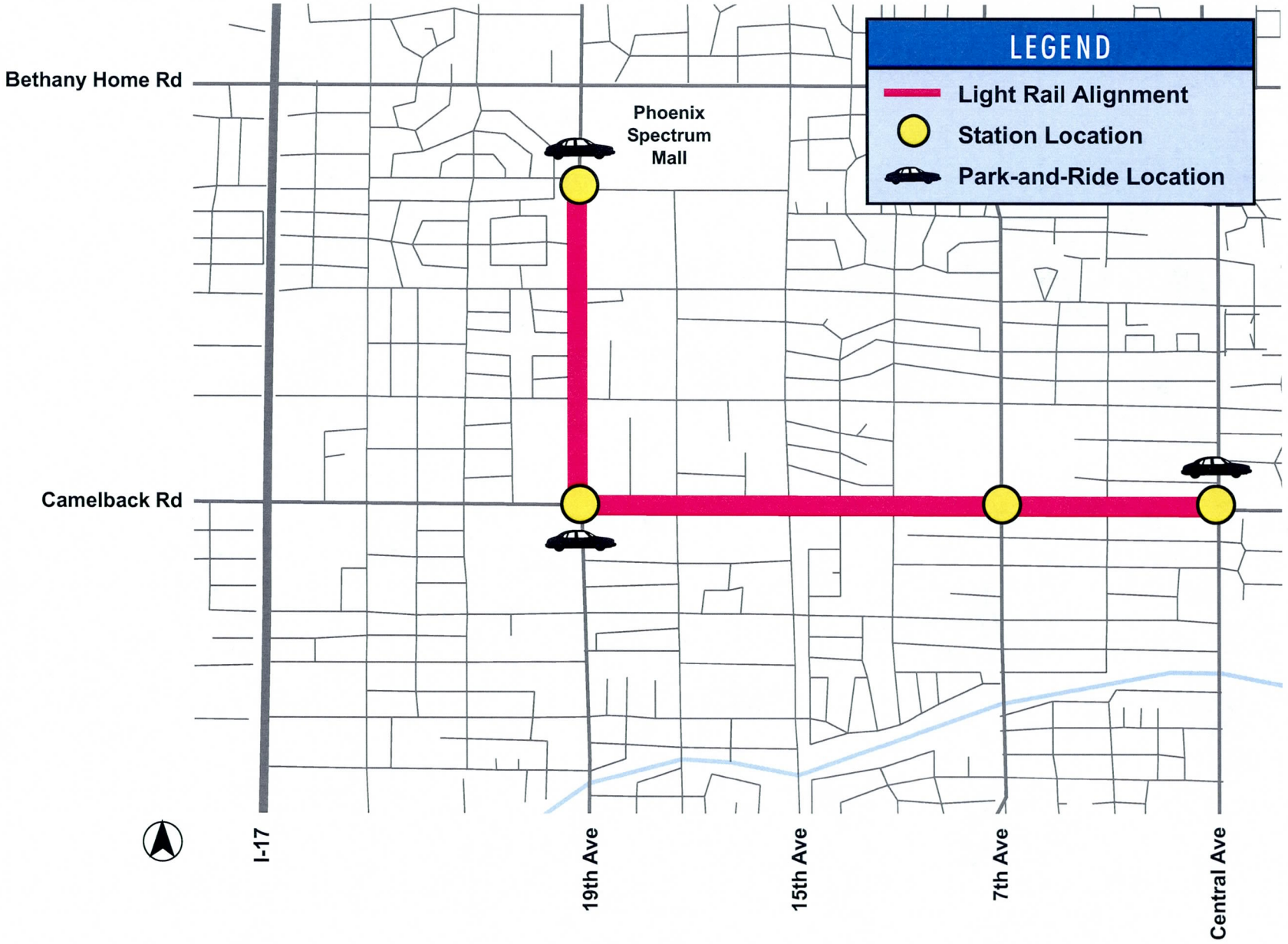

LINE SECTION 2

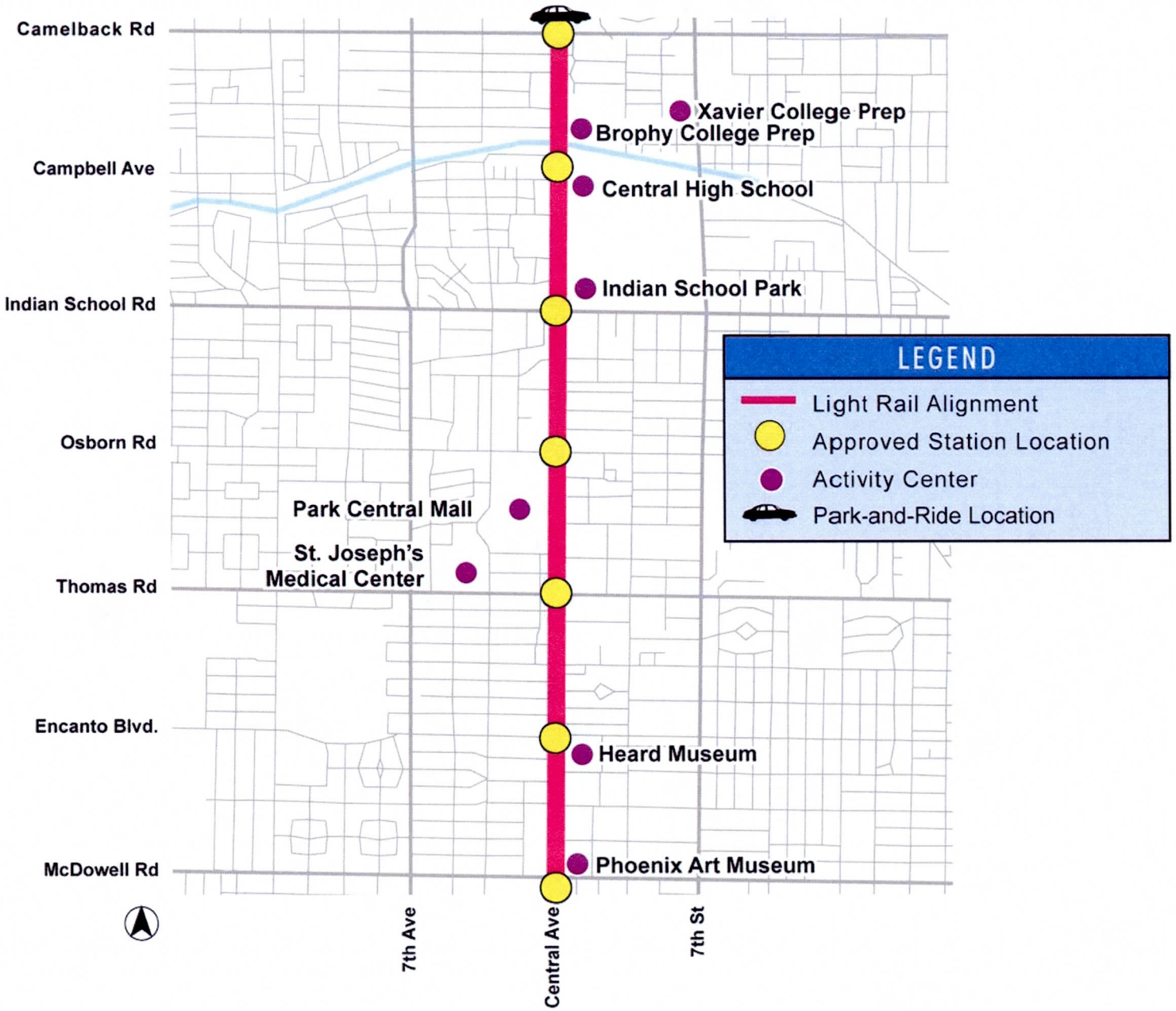

LINE SECTION 3

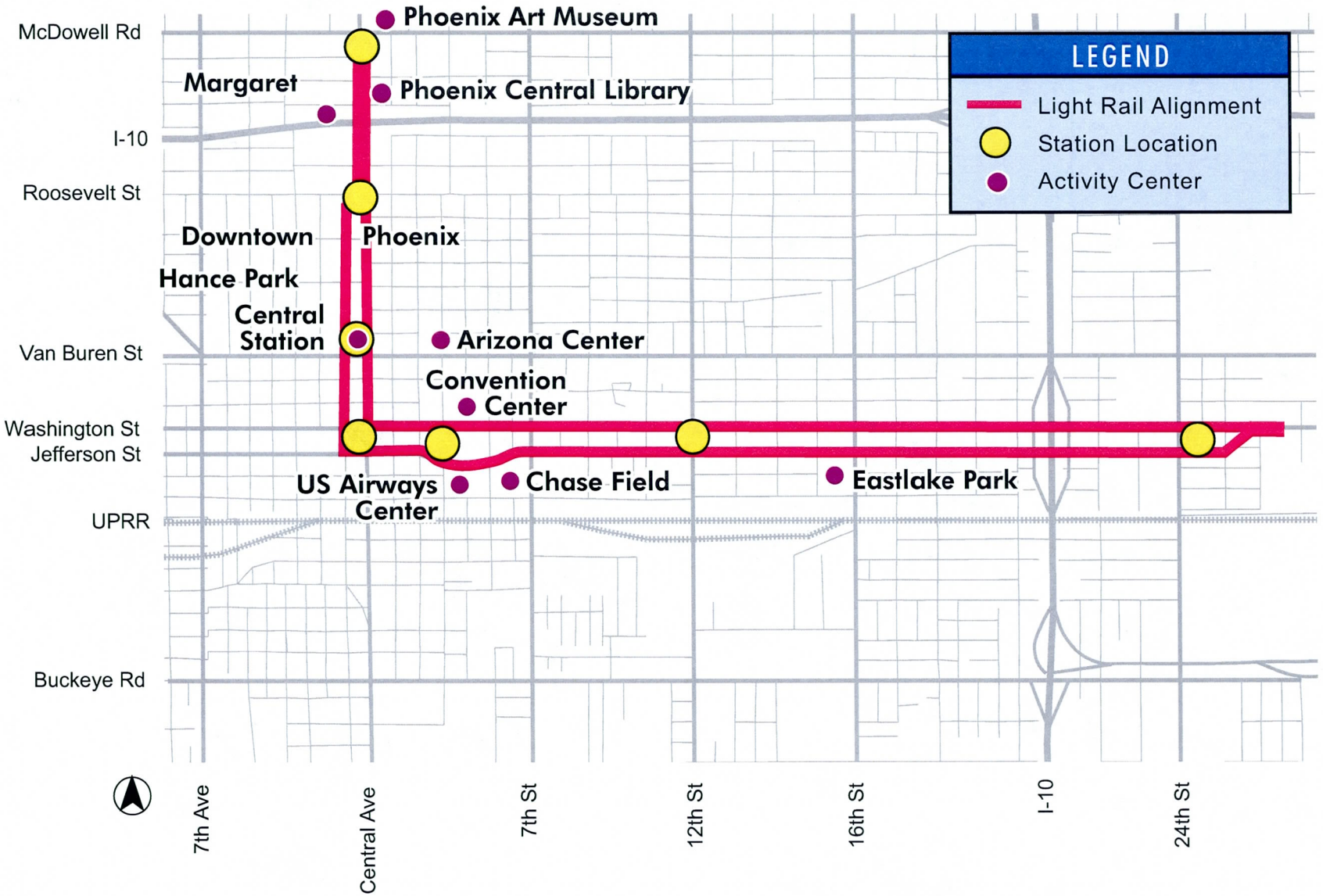

LINE SECTION 4

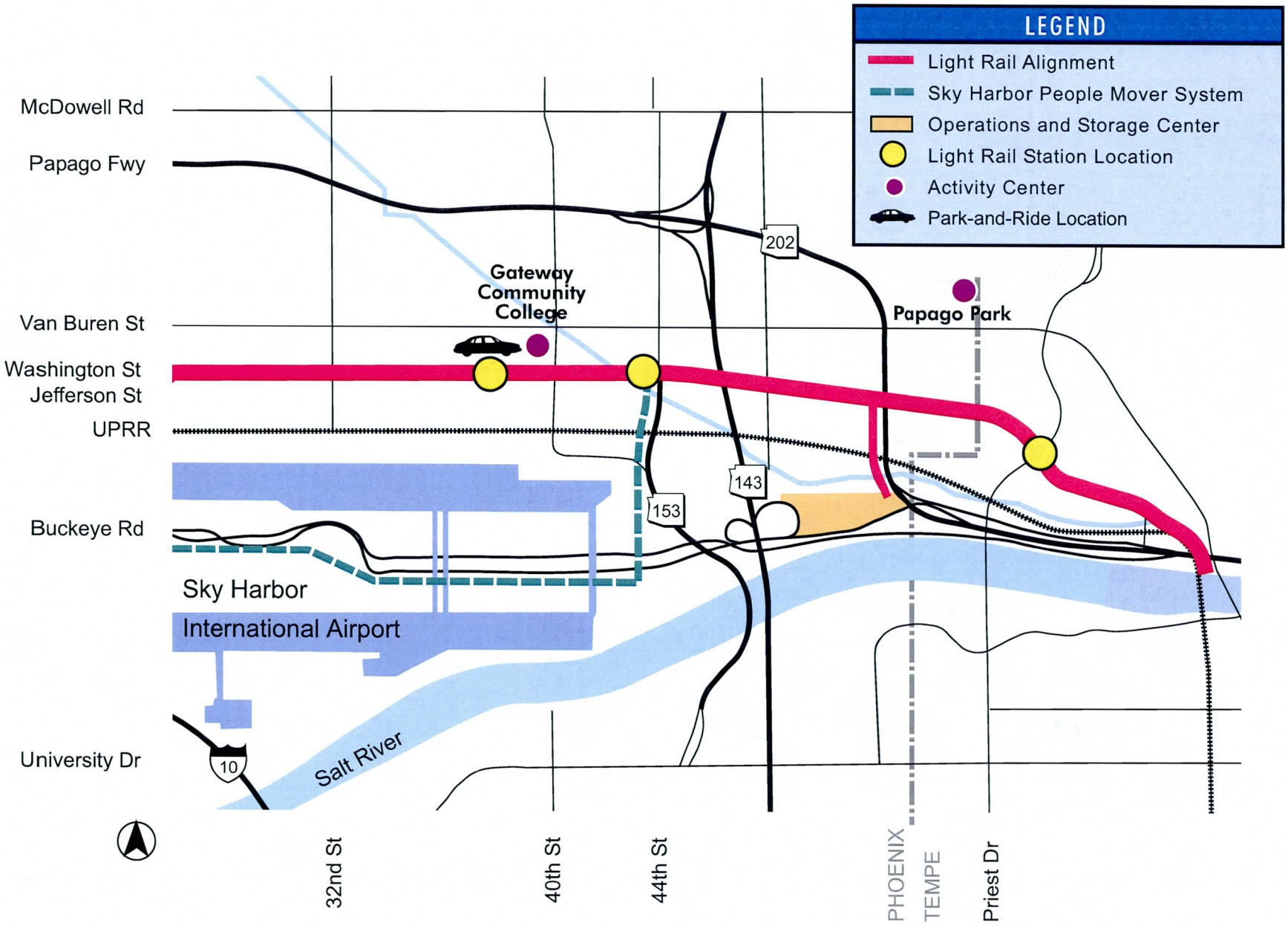

LINE SECTION 5

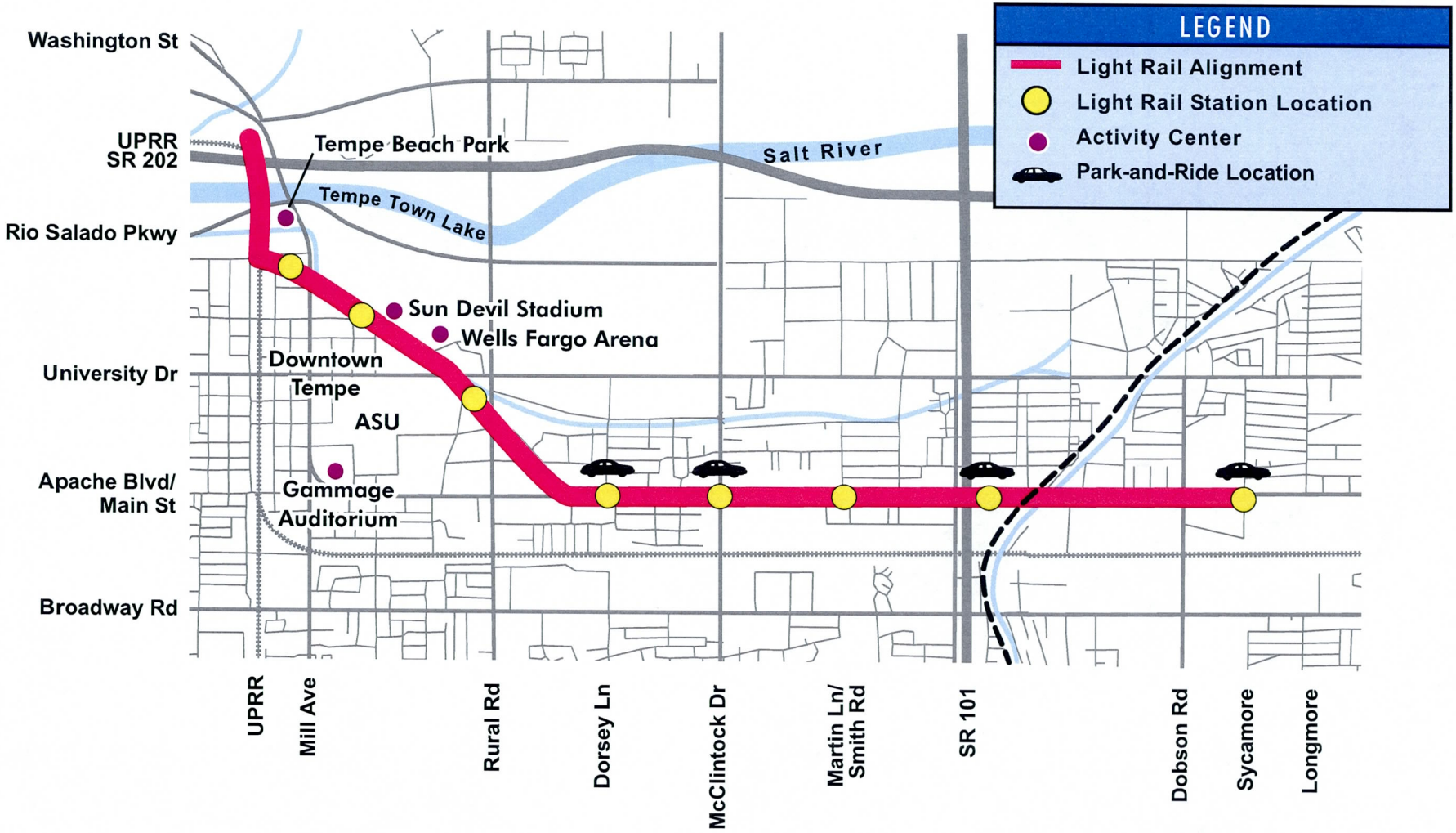

TRANSIT CORRIDORS

HIGH CAPACITY/LIGHT RAIL

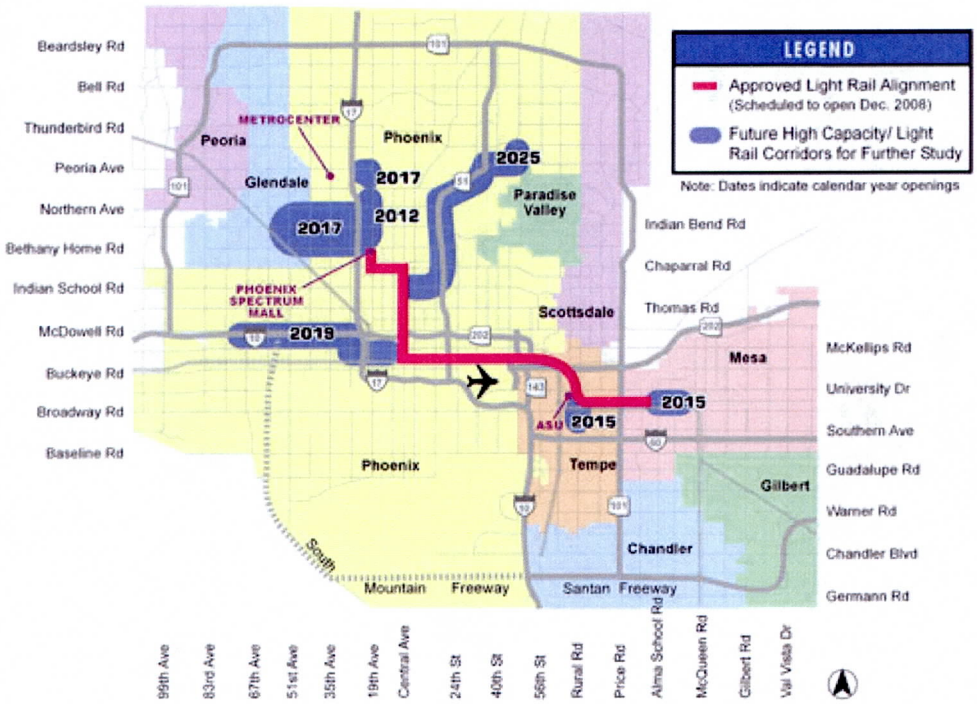

METRO LRT DESIGN CRITERIA MANUAL

PREFACE

The METRO LRT Design Criteria Manual has been developed as a set of general guidelines as well as providing specific criteria to be employed in the preparation and implementation of the planning, design and construction of new light rail corridors and the extension of existing corridors. This 2007 issue of the Light Rail Design Criteria Manual was developed to remain in compliance with accepted practices with regard to safety and compatibility with METRO's existing system and the intended future systems that will be constructed by METRO. The manual reflects the most current accepted practices and applicable codes in use by the industry.

The intent of this manual is to establish general criteria to be used in the planning and design process. However, deviations from these accepted criteria may be required in specific instances. Any such deviations from these accepted criteria must be submitted on the design deviation request included in Appendix B.

Coordination with local agencies and jurisdictions is still required for the determination and approval for fire protection, life safety, and security measures that will be implemented as part of the planning and design of the LRT system. Conflicting information or directives between the criteria set forth in this manual shall be brought to the attention of METRO and will be addressed and resolved between METRO and the local agencies and/or jurisdictions.

This manual will be updated periodically either in part or in whole as deemed appropriate by METRO. Any updates or modifications to the manual will take precedence over previous versions or criteria at the time of approval of the updated material or sections of the manual.

Procedure for Design Criteria Manual Revisions

The request for a change shall be submitted to METRO. The request shall be submitted on the REQUEST for REVISION/DEVIATION form included in Appendix B.

Description: Describe the modification and why the current Section does not adequately capture the criteria presented in the January 2007 DCM.

Background: Provide detailed background information describing the modification and other relevant information. If this modification is a significantly different means of performing the design that is already described in the manual, this difference should be clearly described. The manner in which the design is currently described along with information from the requestor on why they believe the current section is not appropriate or needs updating.

Justification: Possible new or revised criteria shall then be recommended.

METRO staff will review and update the requestor's modification for presentation at a DCM Focus Group Meeting. The REQUEST for REVISION/DEVIATION form will include a METRO staff recommendation on any proposed criteria revisions; however, alternative suggestions will be considered at the meeting. The REQUEST for REVISION/DEVIATION form is distributed for discussion at the DCM Focus Group meeting and is also included in a summary report.

A presentation is made at the DCM Focus Group meeting, which describes the modification issues and the procedure. The requestor will be given the opportunity to provide a presenter to make a presentation on the nature of the modification. METRO staff will lead a discussion of possible DCM revisions. The participants at the meeting are encouraged to ask questions concerning the issues and to offer recommendations. Recommendations concerning proposed revisions made both in person at the DCM Focus Group meeting and in writing will be considered. Final decisions on revisions are made through a clearance process within METRO and listed on the following DESIGN CRITERIA MANUAL, REVISIONS TRACKING FORM.

Notice of DCM Revisions: Depending on the number of revisions presented to METRO, periodic updates of the manual will be placed on the METRO web site, distributed to local jurisdictions, private utility companies and consultants currently under contract with METRO.

METRO

DESIGN CRITERIA MANUAL

Revisions Tracking Form

Section	Reference	Revisions General Description	Issue Date
Preface	Revisions	Page 2 – Focus Group Meeting	06-28-07
Preface	Tracking Form	Page 3 – Updated Tracking Form	06-28-07
-	Table of Contents	Chapter 2 and Chapter 8 Revisions	06-28-07
Chapter 5	Structural	Page 5-2, Eliminate Reference to IBC	06-28-07
Chapter 5	Structural	Page 5-4, Eliminate Reference to IBC	06-28-07
Chapter 2	Track Alignment	Add Structural Clearance Requirements	06-28-07
Chapter 8	Vehicle	Move Vehicle Performance from Chapter 2	06-28-07
-	Chapter 2 Tab	Replace the Divider with New Tab	06-28-07

Procedure for Design Criteria Manual Revisions

The request for a change shall be submitted to METRO. The request shall be submitted on the REQUEST for REVISION/DEVIATION form included in Appendix B.

Description: Describe the modification and why the current Section does not adequately capture the criteria presented in the January 2007 DCM.

Background: Provide detailed background information describing the modification and other relevant information. If this modification is a significantly different means of performing the design that is already described in the manual, this difference should be clearly described. The manner in which the design is currently described along with information from the requestor on why they believe the current section is not appropriate or needs updating.

Justification: Possible new or revised criteria shall then be recommended.

METRO staff will review and update the requestor's modification for presentation at METRO's Executive Committee meeting. The REQUEST for REVISION/DEVIATION form will include a METRO staff recommendation on any proposed criteria revisions; however, alternative suggestions will be considered at the meeting. The REQUEST for REVISION/DEVIATION form is distributed for discussion at the METRO Executive Committee meeting and is also included in a summary report.

A presentation is made at the METRO Executive Committee meeting, which describes the modification issues and the procedure. The requestor will be given the opportunity to provide a presenter to make a presentation on the nature of the modification. METRO staff will lead a discussion of possible DCM revisions. The participants at the meeting are encouraged to ask questions concerning the issues and to offer recommendations. Recommendations concerning proposed revisions made both in person at the METRO Executive Committee meeting and in writing will be considered. Final decisions on revisions are made through a clearance process within METRO and listed on the following DESIGN CRITERIA MANUAL, REVISIONS TRACKING FORM.

Notice of DCM Revisions: Depending on the number of revisions presented to METRO, periodic updates of the manual will be placed on the METRO web site, distributed to local jurisdictions, private utility companies and consultants currently under contract with METRO.

METRO

DESIGN CRITERIA MANUAL

Revisions Tracking Form

Section	Reference	Revision General Desciption	Issue Date

DESIGN CRITERIA MANUAL FOCUS GROUP PARTICIPATION CONCENSUS

This document serves as a record that the undersigned has been part of the METRO design criteria manual focus group meetings. The purpose of these meetings was to create a forum for agencies, utility companies and municipalities to work collaboratively with METRO to update the Central Phoenix East Valley (CPEV) light rail project design guidelines. METRO has updated each section of the design criteria manual based upon my input as representing my employer with the understanding that this document is a "living" document and is subject to change or revisions. By signing this document, I agree that to the best of my knowledge and understanding, this document is an accurate representation of the data/input I have collaboratively provided as part of the focus group meetings. I also understand that if anything should change or deviate from information I have provided it is my responsibility to notify the METRO project manager of any such modification in writing so that METRO can provide the appropriate updates to our manual as deemed necessary.

METRO
Brian Buchanan
- Alvin Livingstone
- Wulf Grote
- Roy Alvarado
- Bill Bugge
- Bill Gustafson
- Avrum Lowenstein
- Larry Isaac
- Barry Mora
- Jim Mathien
- John Swanson
- Arkady Bernshteyn
- Larry Engleman
- Jay Harper
- Steve Bethel

APS
Lois Winkler
- Ron Gandara
- Mike Caglio
- John Rael

COX COMMUNICATIONS
Carl McKay

MAG
Eric Anderson
- Paul Ward

SRP-POWER
Curtis Freeman
- Bruce Souder

SRP-WATER
Kyle Tilghman
- Robert Gooch
- Joel Gilmore
- Hector Buenrostro

SOUTHWEST GAS
Zach Stevenson
- Mark Durazo

CITY of PHOENIX
Tom Callow
- Clare Fletcher
- Paul Driver
- Luiz Moreno
- Tom Godbee
- Heide Young
- Ray Almanzar
- Sandy Zwick
- Kelly Kvetko
- Chuck Italiano
- Mark Melnychenko
- Maria Hyatt
- Karen Bienas

CITY of PHOENIX (Water Services)
Aimee Conroy
- Gary Griffith

BROWN & CALDWELL
- Larry Ayers
- Noel Herrera
- Arno Leskinen

CITY of TEMPE
Jyme Sue McLaren
- Gregg Kent
- Ken Olmstead
- Ron Conway
- Jim Decker
- Glenn Kephart

CITY of MESA
Jeff Martin
- Mike James
- Ross Renner
- Sheri Pilgram
- Dan Cleavenger

CITY of GLENDALE
Robert Knighten
- Terry Johnson
- Katherine Emery
- Steve Hancock
- Chris Lemka

TIME WARNER
Rick Young

QWEST
Rob Hardy
- Marvin Lomax

Table of Contents

Table of Contents

1.0 GENERAL 1-1
1.1 METRO LRT PROJECT 1-1
1.2 PURPOSE AND SCOPE 1-1
1.3 DEFINITIONS 1-1
1.4 CLIMATE CONDITIONS 1-9
1.5 SYSTEM TECHNOLOGY DESCRIPTION 1-9
1.6 SYSTEMWIDE GOALS 1-9
1.6.1 Proven Hardware 1-10
1.6.2 Design Life 1-10
1.6.3 Service Integration 1-10
1.6.4 Urban Design Guidelines 1-10
1.7 CONCURRENT NON PROJECT ACTIVITIES 1-11
1.7.1 Waterline Clearance 1-11

2.0 TRACK ALIGNMENT AND VEHICLE CLEARANCE 2-1
2.1 PURPOSE AND SCOPE 2-1
2.2 TRACK ALIGNMENT 2-1
2.2.1 Horizontal Alignment 2-2
2.2.1.1 Tangent Alignment 2-3
2.2.1.2 Curved Alignment 2-4
2.2.2 Vertical Alignment 2-8
2.2.2.1 Vertical Tangents 2-8
2.2.2.2. Vertical Grades 2-9
2.2.2.3 Vertical Curves 2-10
2.3 VEHICLE CLEARANCE REQUIREMENTS 2-11
2.3.1 General 2-11
2.3.2 Clearance Envelope 2-12
2.3.2.1 Vehicle Dynamic Envelope 2-12
2.3.2.2 Other Wayside Factors 2-13
2.3.2.3 Running Clearances 2-13
2.3.3 Special Clearance Situations 2-14
2.3.3.1 Vehicle Interface at Station Platforms 2-14
2.3.3.2 Retaining Walls 2-14
2.3.3.3 Maintenance and Emergency Evacuation Paths 2-15
2.3.4 Vertical Clearances 2-15
2.3.5 Track Spacing 2-15

3.0 CIVIL WORK 3-1
3.1 SURVEY CONTROL 3-1
3.1.1 Horizontal Control 3-1
3.1.2 Vertical Control 3-1
3.1.3 Survey Control - Right-of-Way 3-1
3.1.4 Design Surveys 3-2
3.1.5 Guideway 3-3
3.1.6 Transition Slabs 3-3

Table of Contents

2.0 TRACK ALIGNMENT AND STRUCTURE CLEARANCE 2-1
2.1 PURPOSE AND SCOPE 2-1
2.2 TRACK ALIGNMENT 2-1
2.2.1 Horizontal Alignment 2-3
2.2.1.1 Mainline Track Tangent Alingnment 2-3
2.2.1.2 Mainline Track Curved Alignment 2-4
2.2.2 Vertical Alignment 2-9
2.2.2.1 Vertical Tangents 2-9
2.2.2.2 Vertical Grades 2-10
2.2.2.3 Vertical Curves 2-11
2.3 TRACK CLEARANCE REQUIREMENTS 2-12
2.3.1 General 2-12
2.3.2 Track Clearance Envelope (Horizontal) 2-13
2.3.2.1 Vehicle Dynamic Envelope 2-13
2.3.2.2 Other Wayside Factors 2-13
2.3.2.3 Running Clearances 2-14
2.3.3 Special Clearance Situations 2-14
2.3.3.1 Vehicle Interface at Station Platforms 2-14
2.3.3.2 Retaining Walls 2-15
2.3.3.3 Maintenance and Emergency Evacuation Paths 2-15
2.3.4 Track Clearance Envelope (Vertical) 2-15
2.3.4.1 Transit Structures 2-16
2.3.5 Track Spacing 2-16

List of Figures

Figure 2-1 Horizontal Curve and Spiral Nomenclature 2-17
Figure 2-2 Superelevation Transitions for Reverse Spirals 2-18
Figure 2-3 Standard Vertical Curves 2-19
Figure 2-4 Track Clearance Envelope with Vehicle Dynamic Envelope 2-20
Figure 2-5 Additional Width for Chorded Construction 2-21
Figure 2-6 Additional Width for Chorded Construction 50″Chord Length 2-22
Figure 2-7 Light Rail Clearance Diagram 2-23
Figure 2-8 Ballasted and Embedded Track at Station Platform 2-24
Figure 2-9 Typical Retained Cut and Retained Fill 2-25

3.2 UTILITIES 3-4
3.2.1 Utility Location and Relocation Requirements 3-4
3.2.2 METRO RUA Requirements 3-4
3.2.3 City of Phoenix RUA Requirements (Water and Sewer) 3-6
3.2.4 Definitions 3-7
3.2.5 Utility Design Reference 3-8
3.2.6 Utility Base Maps 3-8
3.2.7 Municipal Utilities 3-9
3.2.8 Private Utilities 3-9
3.2.9 Utility Service Requests 3-10
3.2.10 Salt River Project (SRP) License Requirements 3-10
3.2.11 Utility Coordination Meetings 3-11
3.3 DRAINAGE 3-11
3.3.1 Drainage Facilities Design 3-12
3.3.2 Precipitation – Intensity – Duration 3-12
3.3.3 Design Discharge 3-12
3.3.4 Storm Drain Design 3-13
3.3.5 Minimum Velocities 3-13
3.3.6 Minimum Pipe Sizes 3-13
3.3.7 Minimum Pipe Clearance 3-14
3.3.8 Pipe Material and Loading 3-14
3.3.9 Corrosion Protection 3-15
3.3.10 Manholes 3-15
3.3.11 Underdrains and Location 3-16
3.3.12 Slope Protection 3-16
3.3.13 Structural Design Codes, Manuals and Specifications 3-16
3.3.14 LRT Loading 3-16
3.4 RIGHT-OF-WAY 3-16
3.4.1 Types of Right-of-Way 3-17
3.4.1.1 Fee Simple 3-17
3.4.1.2 Permanent Easement 3-17
3.4.1.3 Temporary Construction Easement 3-17
3.4.1.4 Utility Easements 3-17
3.4.1.5 Traffic Easements 3-17
3.4.2 Right-of-Way Criteria 3-18
3.4.2.1 Right-of-Way Limits 3-18
3.4.3 Right-of-Way Information Requirements 3-19
3.4.4 Fencing 3-20
3.5 ACQUISITION PROCESS 3-20
3.6 ROADWAYS 3-20
3.6.1 General 3-20
3.6.2 Roadway Geometrics 3-21
3.6.3 Traffic Lane Widths 3-21
3.6.4 Bus Bays 3-22
3.6.5 Paving 3-22
3.6.6 Curbs and Curb Cuts 3-23
3.6.7 Driveways and Alleys 3-23
3.6.8 Sidewalks 3-23

4.0 TRACKWORK 4-1

4.1 GENERAL 4-1
4.2 TRACK SYSTEM 4-1
4.2.1 Trackwork Classification 4-2
4.2.2 Track Construction Types 4-2
4.2.3 Transition Slabs 4-3
4.3 TRACK GAUGE AND WHEEL GAUGE 4-4
4.3.1 Track Gauge 4-4
4.3.2 Wheel Profile and Gauge 4-4
4.4 TRACK CONSTRUCTION TOLERANCES 4-4
4.5 TRACK COMPONENTS 4-5
4.5.1 Ballast-Subballast-Subgrade 4-5
4.5.2 Crossties and Switch Ties 4-6
4.5.3 Tee Rail and Girder Groove Rail 4-7
4.5.4 Restraining Guardrail for Curved Track 4-8
4.5.5 Special Trackwork Plates for Timber Switch Ties 4-8
4.5.6 Direct Fixation Rail Fasteners 4-9
4.5.7 Direct Fixation Steel Shims 4-9
4.5.8 Direct Fixation Special Trackwork 4-10
4.5.9 Insulated Joint Bars 4-10
4.5.10 Joint Bars 4-10
4.5.11 Compromise Joints (Transition Rails) 4-10
4.5.12 Derails 4-10
4.5.13 Miscellaneous Track Appurtenances 4-11
4.6 SPECIAL TRACKWORK 4-11
4.6.1 Switch Machines – Power Operated and Manual 4-14
4.7 AT – GRADE HIGHWAY CROSSINGS 4-14
4.8 TRACTION POWER – IMPACT ON TRACK 4-15
4.9 SIGNALING AND TRAIN CONTROL – IMPACT ON TRACK 4-15
4.10 RAIL GRINDING 4-16
4.11 NOISE AND VIBRATION ATTENUATION 4-16

5.0 STRUCTURAL 5-1

5.1 INTRODUCTION 5-1
5.2 DESIGN CODES, MANUALS AND SPECIFICATIONS 5-1
5.3 LOADS AND FORCES 5-2
5.3.1 Dead Load 5-2
5.3.2 Live Loads 5-2
5.3.3 Impact 5-3
5.3.4 Derailment Loads 5-3
5.3.4.1 Application of Derailment Loads 5-3
5.3.4.2 Vertical Derailment Loads 5-3
5.3.4.3 Horizontal Derailment Loads 5-4
5.3.5 Other Loads and Forces 5-4
5.4 SEISMIC DESIGN 5-5
5.5 SOILS AND GEOLOGIC DATA 5-5

5.6 REINFORCED AND PRESTRESSED CONCRETE 5-5
5.7 STRUCTURAL STEEL 5-5
5.8 EARTH RETAINING STRUCTURES 5-6
5.9 UNDERGROUND STRUCTURES 5-6
5.9.1 Reinforced Concrete Box Line and Station Section 5-6
5.9.2 Reinforced Concrete Retaining Walls 5-7
5.9.3 Shafts 5-7
5.9.4 Sound Walls 5-8
5.10 PORTALS AND U-SECTIONS 5-8
5.11 AERIAL STRUCTURES 5-8
5.11.1 Design Specifications 5-9
5.11.2 Application of Loadings 5-9
5.11.3 Reduction in Load Intensity 5-9
5.11.4 Special Design Considerations 5-9
5.11.4.1 Vibration and Deflection Control 5-9
5.11.4.2 Trackwork 5-10
5.11.4.3 Fatigue 5-10
5.11.4.4 Uplift 5-10
5.11.4.5 Friction 5-10
5.11.4.6 LRT Stray Current Provisions 5-10
5.11.4.7 Rail Break 5-10
5.12 SUPPORT AND UNDERPINNING OF EXISTING STRUCTURES 5-10
5.13 SUPPORT OF EXCAVATION STRUCTURES 5-11

6.0 STATION AND OTHER LRT FACILITIES DESIGN CRITERIA 6-1

6.1 SCOPE 6-1
6.2 CODES AND STANDARDS 6-1
6.2.1 Applicable Codes and Standards Include 6-1
6.2.2 Development Permitting Process 6-3
6.2.2.1 Introduction 6-3
6.2.2.2 Permitting Process 6-3
6.2.2.3 Pre-Application 6-3
6.2.2.4 95% Design Submittal 6-4
6.2.2.5 100% Design Submittal 6-4
6.2.2.6 Permit Fees 6-4
6.3 STATION GEOMETRICS 6-4
6.3.1 Configuration 6-5
6.3.2 Platform Length (Calculated Platform) 6-5
6.3.3 Platform Width 6-5
6.3.4 Travel Lanes/Exit Lanes 6-5
6.3.4.1 Patron Lane Requirement 6-6
6.3.5 Vertical Clearances 6-6
6.4 STATION AMENITIES 6-7
6.4.1 Shading and Climate Protection 6-7
6.4.2 Seating 6-7
6.4.3 Restrooms 6-7
6.4.4 System Support Element 6-8

6.4.5 Advertising 6-8
6.4.6 Drinking fountains 6-8
6.4.7 Trash Receptacles 6-8
6.4.8 Hose Bibs 6-8
6.4.9 Electrical Convenience Outlets 6-9
6.4.10 Patron Information (Maps) 6-9
6.4.11 Emergency Call Boxes (ECBs) 6-9
6.4.12 Closed Circuit Television Cameras (CCTVs) 6-9
6.4.13 Public Address System (PA)/Variable Message Boards (VMBs) 6-10
6.4.14 Art 6-10
6.5 ACCESSIBILITY FOR INDIVIDUALS WITH DISABILITIES 6-10
6.6 LIGHTING 6-10
6.7 VERTICAL CIRCULATION 6-10
6.8 STATION SITE 6-11
6.8.1 Pedestrian Access 6-11
6.8.2 Bus 6-11
6.8.3 Bicycles 6-12
6.8.4 Kiss-and-Ride 6-12
6.8.5 Park-and-Ride 6-12
6.8.5.1 Parking for Individuals with Disabilities 6-13
6.8.5.2 Emergency 6-13
6.8.5.3 Site Layout 6-13
6.8.5.4 Wheel Stops 6-13
6.8.5.5 Landscaping 6-13
6.8.6 Fencing 6-14
6.8.7 Signing 6-14
6.8.8 Landscaping 6-14
6.8.8.1 Trees 6-15
6.8.8.2 Station Vines 6-16
6.9 MATERIALS 6-17
6.9.1 Safety 6-17
6.9.1.1 Fire Resistant and Smoke Generation 6-17
6.9.1.2 Attachment 6-17
6.9.1.3 Slip-Resistant Walking Surface 6-17
6.9.1.4 Electrical Characteristics 6-17
6.9.1.5 Durability 6-17
6.9.2 Ease of Maintenance 6-18
6.9.2.1 Cleaning 6-18
6.9.2.2 Repair or Replacement 6-18
6.9.2.3 Resistanve to Vandalism 6-18
6.9.2.4 Color 6-18
6.9.2.5 Unit Size 6-18
6.9.2.6 Joints 6-18
6.9.2.7 Installation Standards 6-18
6.9.3 List of Potential Finish Materials 6-18

7.0 OPERATIONS 7-1
7.1 OPERATIONAL OBJECTIVES 7-1

7.2 SAFETY AND SECURITY RELATED CRITERIA 7-1
7.2.1 LRT Transportation 7-2
7.2.1.1 Control and Supervision Considerations 7-2
7.2.1.2 Operational Considerations 7-2
7.2.1.3 Personnel Considerations 7-2
7.2.2 Light Rail Vehicles 7-3
7.2.3 Train Movements 7-3
7.2.4 Passenger Facilities 7-4
7.2.5 Grade Crossings 7-5
7.2.6 Regulatory Considerations 7-5
7.3 RELIABILITY RELATED CRITERIA 7-5
7.3.1 Service Reliability Tolerances 7-5
7.3.2 Operational Considerations 7-6
7.3.2.1 LRT Transportation 7-6
7.3.2.2 Intermodal Connections 7-6
7.3.2.3 Light Rail Vehicles 7-6
7.3.2.4 Passenger Facilities and Fare Collection 7-6
7.3.2.5 Main Tracks 7-6
7.3.2.6 Systems 7-7
7.3.3 Preventive Maintenance Measures 7-7
7.3.3.1 Vehicle Maintenance 7-7
7.3.3.2 Facilites and System Maintenance 7-7
7.3.3.3 Reserved 7-7
7.3.3.4 Computerized Maintenance Management System 7-7
7.3.4 Preparatory Measures 7-7
7.3.4.1 Light Rail Vehicles 7-7
7.3.4.2 Passenger Facilities 7-8
7.3.4.3 Main Tracks 7-8
7.3.4.4 Junctions 7-8
7.3.4.5 Terminals 7-8
7.3.4.6 Crossovers 7-9
7.3.4.7 Yards and Auxiliary Tracks 7-9
7.3.4.8 Shop & Vehicle Maintenance 7-10
7.3.5 Traction Power Systems 7-10
7.4 PASSENGER CONVENIENCE RELATED CRITERIA 7-10
7.4.1 Operational Planning Considerations 7-10
7.4.1.1 LRT Operating Speeds 7-10
7.4.1.2 LRT Service Configuration 7-11
7.4.1.3 LRT Level of Service 7-11
7.4.1.4 Intermodal Connections 7-11
7.4.2 Light Rail Vehicles 7-14
7.4.3 Passenger Facilities 7-14
7.5 OPERATIONAL COST-EFFECTIVENESS 7-15
7.5.1 Operational Planning Considerations 7-15
7.5.1.1 Service Effectiveness 7-15
7.5.1.2 Operating Expense 7-15
7.5.1.3 Capital Expense 7-15
7.5.2 Maintenance Planning Considerations 7-15
7.5.2.1 Maintenance Effectiveness 7-15

7.5.2.2 Operaing Expense 7-15
7.5.2.3 Capital Expense 7-16

8.0 VEHICLE 8-1
8.1 WAYSIDE CHARACTERISTICS 8-1
8.2 GENERAL VEHICLE CHARACTERISTICS 8-2
8.2.1 General 8-2
8.2.2 Operating Characteristics 8-3
8.2.3 Vehicle Body Dimensions 8-3
8.2.4 Passenger Doors 8-3
8.2.5 Wheel Dimensions 8-4
8.2.6 Truck Dimensions 8-4
8.2.7 Anticlimber Bumpers 8-4
8.2.8 Couplers 8-4
8.2.9 Controlled Collapse Cab 8-5
8.3 DYNAMIC ENVELOPE 8-5
8.4 VEHICLE WEIGHT AND DESIGN LOADING 8-5
8.5 VEHICLE PERFORMANCE 8-6
8.5.1 Supply Voltage 8-6
8.5.2 Operation Under Reduced Voltage 8-6
8.5.3 Maximum Line Current 8-6
8.5.4 Acceleration 8-6
8.5.5 Service Braking 8-7
8.5.6 Emergency Braking 8-7
8.5.7 Parking Brake 8-7
8.5.8 Operating Speed 8-7
8.5.9 Duty Cycle 8-7
8.5.10 Annual Average Mileage 8-7
8.5.11 On-Board Diagnostics 8-8
8.6 PASSENGER COMFORT 8-8
8.6.1 Heating Ventilation and Air Conditioning 8-8
8.6.2 Interior Noise 8-9
8.6.3 Ride Comfort 8-9
8.6.4 Interior Lighting 8-9
8.6.5 Interior Design 8-10
8.7 RELIABILITY 8-10
8.8 MAINTAINABILITY 8-11

9.0 MAINTENANCE & STORAGE FACILITY (MSF) 9-1
9.1 GENERAL 9-1
9.1.1 Site Selection 9-2
9.1.2 Maintenance of Equipment Shop (MOE) 9-3
9.1.3 Service and Cleaning Area (S&C) 9-4
9.1.4 LRV Washer 9-5
9.1.5 LRV Storage and Yard Tracks 9-5
9.1.6 Maintenance of Way Shop (MOW) 9-6
9.1.7 Entry Station 9-6
9.1.8 Employee, Visitor and Authority Parking 9-7

9.1.9 Traction Power Substations 9-7
9.1.10 Signal and Communication Houses 9-7
9.1.11 Internal Road Circulation System 9-7
9.1.12 Utilities 9-8
9.1.13 Landscaping 9-8
9.1.14 Miscellaneous Structures 9-8
9.1.15 Historical Trolley (Future) 9-8
9.1.16 Special Site Requirements 9-8
9.1.17 Items not included in MSF 9-8
9.1.18 Codes, Ordinances and Guidelines 9-9

10.0 TRACTION POWER SUPPLY AND DISTRIBUTION SYSTEM 10-1

10.1 GENERAL 10-1
10.2 REQUIREMENTS 10-1
10.3 SYSTEM VOLTAGES 10-2
10.4 BASIS FOR SUBSTATION LOCATION, SPACING, AND RATING 10-3
10.4.1 Normal Operation 10-3
10.4.2 Contingency Operation 10-3
10.4.3 Special Events Operation 10-4
10.5 TRACTION POWER SUBSTATIONS 10-4
10.5.1 General 10-4
10.5.2 Substation Traction Power Equipment 10-4
10.5.3 Metering 10-5
10.5.4 Protection 10-6
10.5.5 Substation Enclosure 10-7
10.5.6 Substation Foundation 10-7
10.5.7 Substation Grounding 10-7
10.5.8 Drainage Cables and Stray Current Measurement 10-8
10.5.9 Ventilation 10-8
10.5.10 Miscellaneous 10-9
10.6 DC FEEDER SYSTEM 10-12
10.6.1 General 10-12
10.6.2 Cables 10-12
10.6.3 Raceways 10-13
10.7 OVERHEAD CONTACT SYSTEM 10-13
10.7.1 General 10-13
10.7.2 Sectionalization 10-14
10.7.3 Disconnect Switches 10-15
10.7.4 OCS Configuration 10-15
10.7.5 Operations 10-16
10.7.6 Contact Wire Height 10-16
10.7.7 Loading 10-17
10.7.8 Spans Length and Staggers 10-17
10.7.9 Catenary Conductors 10-18
10.7.10 Construction and Maintenance Tolerance 10-18
10.7.11 Poles and Foundation 10-19
10.7.12 Electrical Clearances 10-20
10.7.13 OCS Support Assemblies 10-20

10.7.14 OCS Tensioning 10-21
10.7.15 OCS Grounding and Bonding 10-21
10.8 NEGATIVE RETURN SYSTEM 10-22
10.9 CORROSION CONTROL 10-22
10.10 TRACTION POWER REMOTE CONTROL 10-23
10.11 LIGHT RAIL VEHICLES 10-23

11.0 SIGNALING 10-1
11.1 INTRODUCTION 11-1
11.2 FUNCTIONAL DESIGN REQUIREMENTS 11-2
11.3 OPERATIONAL DESIGN REQUIREMENTS 11-3
11.4 ENVIRONMENTAL DESIGN 11-3
11.5 ELECTROMAGNETIC INTERFERENCE (EMI) 11-4
11.6 GROWTH AND EXPANSION 11-4
11.7 CODES AND STANDARDS 11-5
11.8 SIGNAL CIRCUITRY 11-5
11.9 TRAIN-TO-WAYSIDE COMMUNICATIONS (TWC) 11-6
11.10 STORAGE YARDS 11-7
11.11 SWITCH MACHINES 11-7
11.12 SIGNALS 11-8
11.12.1 LRT (Bar) Signal Aspects 11-8
11.12.2 Color Light Signal Aspects 11-8
11.12.3 Switch Position Indicator Aspects 11-9
11.13 AUTOMATIC HIGHWAY CROSSING WARNING SYSTEMS 11-9
11.14 INTERFACE REQUIREMENTS 11-9
11.14.1 Street Traffic Signal System Interface 11-9
11.14.2 Vehicle Interface 11-10
11.14.3 Trackwork Interface 11-10
11.14.4 Traction Power Subsystem Interface 11-11
11.14.5 Communications Interface 11-11
11.15 TRACK CIRCUITS 11-11
11.16 POWER 11-12
11.17 HOUSES 11-12
11.18 INSTALLATION 11-13
11.19 QUALITY, RELIABILITY AND MAINTAINABILITY 11-13

12.0 COMMUNICATIONS 12-1
12.1 GENERAL 12-1
12.2 COMMUNICATIONS SUBYSTEMS 12-2
12.2.1 Radio 12-2
12.2.2 Telephone 12-4
12.2.3 Public Address 12-4
12.2.4 Variable Message Boards 12-5

12.2.5 Closed Circuit Television 12-6
12.2.6 Carrier Transmission Subsystem 12-6
12.3 SUPERVISORY CONTROL AND DATA ACQUISITION 12-7
12.4 CENTRAL CONTROL SYSTEM (CCS) 12-8
12.5 ACCESS CONTROL 12-9
12.5.1 Functional Requirements 12-9
12.5.2 MOW Facilities 12-10
12.5.3 Yard and Shop Facilities 12-10
12.6 FIRE DETECTION AND SUPPRESSIONS MONITORING 12-10
12.6.1 Description 12-10
12.6.2 Fire Detection 12-10
12.6.3 Suppression Monitoring 12-11
12.6.4 Power 12-11

13.0 AUTOMATED FARE COLLECTION SYSTEM 13-1
13.1 DESIGN OBJECTIVES 13-1
13.2 DESIGN APPROACH 13-1
13.2.1 System Conformity 13-1
13.2.2 LRT Fare Control 13-1
13.3 DESIGN CRITERIA 13-2
13.3.1 Fare Structure and Ticket Media 13-2
13.3.2 Fare Equipment Varieties 13-2
13.3.3 Fare Equipment Locations 13-2
13.3.4 Fare Equipment Quantities 13-3
13.3.5 Installation Requirements and Restrictions 13-3
13.3.6 Conduits and Cabling 13-3
13.3.7 General Equipment Requirements 13-4
13.3.7.1 Design Life 13-4
13.3.7.2 Codes and Standards 13-4
13.3.7.3 Americans with Disabilities Act (ADA) Requirements 13-4
13.3.7.4 Climate and Environment 13-4
13.3.7.5 Electrical Design Requirements 13-4
13.3.7.6 Transaction Speeds 13-5
13.3.7.7 Modularity and Maintainability 13-5
13.3.7.8 Reliability 13-6
13.3.7.9 Safety 13-6
13.3.7.10 Security 13-6
13.3.8 Handheld Verifier 13-7
13.3.8.1 Operational Requirements 13-7
13.3.9 Ticket Vending Machine 13-7
13.3.9.1 Operation 13-7
13.3.9.2 Enclosure 13-8
13.3.9.3 User Interface 13-8
13.3.9.4 Passenger Display 13-8
13.3.9.5 Recorded Voice Instruction 13-9
13.3.9.6 Instructional Graphics 13-9
13.3.9.7 Coin Return/Ticket Cup 13-9

13.3.9.8 Coin System 13-9
13.3.9.8.1 Coin Acceptor 13-10
13.3.9.8.2 Coin Escrow and Recirculation Unit 13-10
13.3.9.8.3 Coin Vault 13-10
13.3.9.8.4 Supplemental Coin Cassettes 13-10
13.3.9.9 Exact Fare Only Mode 13-11
13.3.9.10 Overpayment Mode 13-11
13.3.9.11 Bill System 13-11
13.3.9.12 Ticket Printing and Encoding System 13-11
13.3.9.13 Ticket Stocks 13-11
13.3.9.14 Ticket Printer/Encoder 13-12
13.3.9.15 Ticket Cutter 13-12
13.3.9.16 Receipt Printer 13-12
13.3.9.17 Credit/Debit Card System 13-12
13.3.9.18 Electronic Control Unit 13-13
13.3.9.19 Communications 13-13
13.3.9.20 Timing and Synchronization 13-13
13.3.9.21 Alarm System 13-14
13.3.9.22 Power System 13-14
13.3.9.23 Maintenance Interference 13-14
13.3.9.24 Revenue Servicing 13-14
13.3.10 Data Collection and Information System (DCIS) 13-14

14.0 LANDSCAPE 14-1
14.1 BASIC GOALS 14-1
14.2 STATION AND TRACKWAY GOALS 14-2
14.2.1 Design Intent 14-2
14.2.2 Pedestrian Shade 14-3
14.2.3 Plant Longevity 14-3
14.2.4 Pedestrian Safety or Security 14-3
14.2.5 Structural Soil 14-3
14.3 PARK-AND-RIDE LOTS 14-4
14.3.1 Design Intent 14-4
14.3.2 Parking Lots 14-4
14.3.3 Pedestrian Shade 14-5
14.3.4 Wayfinding 14-5
14.4 HARDSCAPE 14-5
14.5 GRADING AND SLOPES 14-6
14.6 PLANT MATERIAL 14-6
14.7 CODES AND STANDARDS 14-7

15.0 FACILITIES ELECTRICAL 15-1
15.1 INTRODUCTION 15-1
15.1.1 General 15-1
15.1.2 Scope 15-1
15.1.3 Codes, Regulations and Standards 15-2
15.1.4 Local Codes and Regulations 15-2
15.1.5 National Codes and Standards 15-2

15.1.6 Interpretation 15-3
15.1.7 Design Guidelines 15-3
15.1.8 Definitions 15-4
15.1.9 Environmental Considerations 15-5
15.1.10 Selection of Materials and Equipment 15-5
15.2 DISTRIBUTION SYSTEM 15-5
15.2.1 General 15-5
15.2.2 Classification of Electrical Loads 15-7
15.2.3 Reliability and Load Transfer Requirements 15-7
15.2.4 Loading of Distribution Equipment and Feeders 15-8
15.2.5 Voltage Levels and Control 15-9
15.2.6 Spare Capacity 15-9
15.2.7 Spaces for Electrical Equipment 15-10
15.2.8 Wiring Methods and Materials 15-10
15.2.9 Electrical Equipment and Devices 15-13
15.2.10 Supply from Traction Power Substations 15-15
15.3 ELECTRICAL SERVICE 15-16
15.3.1 General 15-16
15.3.2 Supply Voltage Levels and Limits 15-16
15.4 EMERGENCY POWER SUPPLY 15-16
15.5 GROUNDING 15-17
15.5.1 Passenger Station Grounding System 15-17
15.5.2 Grounding Requirements 15-17
15.6 LIGHTING 15-19
15.6.1 General 15-19
15.6.1.1 Requirements 15-19
15.6.2 Calculations 15-19
15.6.3 Illuminance Values 15-21
15.6.4 Light Control 15-23
15.6.5 Emergency Illuminance Values 15-23
15.6.6 Emergency Lighting 15-24
15.6.7 Emergency Lighting Control 15-24
15.7 STREET LIGHTING 15-24
15.7.1 General 15-24
15.7.2 City of Phoenix 15-24
15.7.2.1 Design Guideline 15-25
15.7.2.2 General Requirements 15-28
15.7.3 City of Mesa 15-28
15.7.3.1 Design Guideline 15-28
15.7.3.2 General Requirements 15-31
15.7.4 City of Tempe 15-31
15.7.4.1 Design Guideline 15-31
15.7.4.2 General Requirements 15-32
15.7.5 City of Glendale 15-33
15.7.5.1 Design Guideline 15-33
15.7.5.2 General Requirements 15-35
15.7.6 SRP General Notes 15-36
15.7.7 Arizona Public Service (APS) Notes 15-37

16.0 TRAFFIC CONTROL 16-1
16.1 GENERAL 16-1
16.2 APPLICABLE STANDARDS 16-1
16.3 GENERAL DESIGN CRITERIA 16-1
16.4 LOCATIONS OF TRAIN INTERFACE WITH TRAFFIC 16-1
16.5 CONTROL OF TRAIN INTERFACE WITH TRAFFIC 16-2
16.6 SIGN DESIGN 16-4
16.7 PAVEMENT MARKING DESIGN 16-4
16.8 GENERAL OPERATIONS 16-4

17.0 SAFETY 17-1
17.1 INTRODUCTION 17-1
17.2 SYSTEM SAFETY PROGRAM 17-1
17.2.1 System Safety Criteria 17-1
17.2.2 System Safety Program Plan 17-3
17.2.2.1. Purpose, Goal, Objectives 17-3
17.2.2.2. Codes and Standards 17-4
17.3 PROJECT SAFETY ORGANIZATION 17-5
17.3.1 Fire/Life Safety and Security Committee 17-5
17.3.2 Safety and Security Certification Review Committee 17-5
17.4 HAZARD IDENTIFICATION, ANALYSIS AND RESOLUTION 17-6
17.5 CONSTRUCTION SAFETY 17-6
17.6 SAFETY AND SECURITY CERTIFICATION PROGRAM 17-6
17.7 DETAILED SAFETY CRITERIA 17-8

18.0 SECURITY 18-1
18.1 INTRODUCTION 18-1
18.2 PASSENGER SECURITY 18-1
18.3 EMPLOYEE SECURITY 18-2
18.4 FACILITY SECURITY 18-2
18.5 SYSTEM SECURITY PROGRAM PLAN 18-2
18.5.1 Purpose of the System Security Program Plan 18-2
18.5.2 Implementing the System Security Program Plan 18-3
18.6 INFORMATION & INFORMATION SYSTEMS SECURITY 18-4
18.7 DETAILED SECURITY CRITERIA 18-5

19.0 STRAY CURRENT AND CORROSION CONTROL 19-1
19.1 GENERAL 19-1
19.2 SCOPE 19-1
19.3 PRE-DESIGN SURVEYING AND TESTING 19-1
19.4 STRAY CURRENT CONTROL 19-2
19.5 TRACKWORK 19-2
19.5.1 Ballasted Track Construction 19-2

19.5.2 Embedded Track Construction 19-2
19.5.3 Direct Fixation Track Construction 19-3
19.5.4 Track-to-Earth Resistance Testing 19-3
19.5.5 Special Trackwork and Hardware 19-3
19.5.5.1 Crossovers Turnouts 19-3
19.5.5.2 Hardware 19-3
19.6 TRACTION POWER FACILITIES AND SUBSYSTEMS 19-3
19.6.1 Traction Power Substations 19-3
19.6.1.1 Mode of Operation 19-3
19.6.1.2 AC Ground System 19-3
19.6.2 Overhead Contact System 19-4
19.6.2.1 Minimum Resistance-to-Earth Requirements 19-4
19.6.2.2 Catenary System Support Poles 19-4
19.6.3 Negative Distribution System 19-4
19.6.3.1 Negative System to Earth Potential Detection 19-4
19.6.3.2 Crossbonds 19-5
19.7 REINFORCED CONCRETE STRUCTURES 19-5
19.7.1 General Provisions 19-5
19.7.2 Bridge Structures 19-5
19.7.3 Retaining Walls 19-6
19.7.4 Embedded Track Slabs 19-7
19.8 MAINTENANCE FACILITY 19-7
19.8.1 Track 19-7
19.8.2 Traction Power 19-7
19.8.3 Buried Structures 19-7
19.8.4 Overhead Catenary System (OCS) 19-7
19.9 CORROSION CONTROL FOR BURIED STRUCTURES 19-8
19.9.1 General 19-8
19.9.1.1 Pressure Piping 19-8
19.9.1.2 Cast Iron, Ductile Iron and Steel Pressure Pipe 19-8
19.9.1.3 Copper Pipe (Pressure) 19-9
19.9.1.4 Reinforced/Prestressed Concrete Pipe (Pressure) 19-9
19.9.1.5 Gravity Flow Piping (Non-Pressurized) 19-10
19.9.1.6 Corrugated Steel Pipe (Non-Pressure) 19-10
19.9.1.7 Cast Iron And Ductile Iron Pipes (Non-Pressure) 19-10
19.9.1.8 Reinforced Concrete Pipe (Non-Pressure) 19-10
19.9.1.9 Electrical Conduits 19-10
19.9.1.10 Piles 19-11
19.9.2 Facilities Owned by Others 19-11
19.9.2.1 Replacement/Relocation of Facilities 19-11
19.9.3 Corrosion Control Components and Subsystems 19-11
19.9.3.1 Electrical Continuity for Piping 19-11
19.9.3.2 Electrical, Insulating Joints for Piping 19-12
19.9.3.3 Sacrificial Anodes 19-12
19.9.3.4 Pipeline Coatings 19-12
19.10 ATMOSPHERIC CORROSION CONTROL 19-13
19.10.1 General 19-13
19.10.2 Traction Power Substations 19-13

19.10.3 Electrical Equipment & Enclosures Installed Within Substation Enclosure 19-13
19.10.4 Overhead Contact System Support Structures 19-13
19.10.4.1 Poles 19-13
19.10.4.2 Overhead System 19-13

APPENDIX A REVIEW COMMENTS

APPENDIX B REQUEST FOR REVISION/DEVIATION TO THE DESIGN CRITERIA MANUAL

List of Tables

Table 2-1 Light Rail Vehicle Dimensions and Coordinate Point Locations 2-27
Table 2-2 Car Body Movements Included in the Vehicle Dynamic Envelope 2-28
Table 2-3 Curve Offsets for Vehicle Dynamic Envelope 2-29

Table 4-1 Turnout Operating Speeds 4-13
Table 4-2 Application of Turnouts
Turnout – Ballast/direct fixation 4-13

Table 8-1 Vehicle Weights for Design Purposes 8-5
Table 8-2 Reliability Requirements 8-11
Table 8-3 Weighted Average of MTTR Values 8-11

Table 15-1 Equipment Demands 15-8
Table 15-2 Control Room, Recommended Percent Reflective Values 15-20
Table 15-3 General Areas, Design Percent Reflective Values 15-20
Table 15-4 Normal Lighting Levels, Target Illuminance Values 15-22
Table 15-5 Normal Lighting Levels, Target Brightness Ratios 15-23
Table 15-6 Emergency Lighting Levels, Target Illuminance Values 15-24
Table 15-7 Spacing Criteria 15-27

List of Figures

Figure 2-1 Horizontal Curve and Spiral Nomenclature 2-17
Figure 2-2 Super Elevation Transitions for Reverse Curves 2-18
Figure 2-3 Standard Vertical Curves 2-19
Figure 2-4 Vehicle Dynamic Envelope 2-20
Figure 2-5 Double-Articulated Light Rail Vehicle Plan Geometry on Curves 2-21
Figure 2-6 Additional Width for Chorded Construction 25' Chord Length 2-22
Figure 2-7 Additional Width for Chorded Constructions 50' Chord Length 2-23
Figure 2-8 Light Rail Clearance Diagram 2-24
Figure 2-9 Typical 10 Foot Retained Cut 2-25
Figure 2-10 Typical 10 Foot Retained Fill 2-26

Figure 3-1 Survey Monumentation 3-25
Figure 3-2 Civil Monumentation 3-26
Figure 3-3 LRT Instreet Tracks – No Utility Zone for Underground Utilities 3-27
Figure 3-4 Typical Utility Locations Open Ballasted Track Section 3-28
Figure 3-5 Utility Zone 3-29
Figure 3-6 COP Utility Zone 3-30
Figure 3-7 COP Water Service Crossing METRO 3-31
Figure 3-8 COP Sanitary Sewer Service Crossing METRO 3-32
Figure 3-9 COP METRO Crossing Casing Detail 3-33
Figure 3-10 SRP Criteria for Utility Crossing or Parallel to SRP Irrigation Pipe 3-34
Figure 3-11 SRP Rail Crossing Standard Detail 3-35
Figure 3-12 Typical Four Lane Roadway with Center Platform 3-36
Figure 3-13 Typical Two Lane Roadway 3-37
Figure 3-14 Typical Four Lane Roadway 3-38
Figure 3-15 Typical Two Lane Roadway Single Track 3-39
Figure 3-16 Typical In-Street Ballast Track 3-40
Figure 3-17 Typical Embedded Track 3-41

Figure 4-1 Tangent Direct Fixation Track 4-17
Figure 4-2 Curved Superelevation Direct Fixation Track 4-18
Figure 4-3 Curved Superelevation Direct Fixation Track w/ Restraining Rail 4-19
Figure 4-4 Direct Fixation Rail Fastener Clearance Envelope 4-20
Figure 4-5 Point of Switch to Point of Switch 4-21
Figure 4-6 Heel of Frog to Point of Switch (Similar Hand Turnouts) 4-22
Figure 4-7 Point of Switch to Point of Switch (Opposite Hand Turnouts) 4-23
Figure 4-8 Heel of Frog to Point of Switch (Opposite Hand Turnouts) 4-24

Figure 5-1 Light Rail Vehicle Loading 5-12

Acronyms and Abbreviations

ACRONYMS AND ABBREVIATIONS

A	Ampere or Algebraic difference in grades on a vertical curve
A/E	Architect Engineer
AT	Auto Tension
AASHTO	American Association of State Highway and Transportation Officials
AC	Asphalt Concrete, Alternating Current
ACI	American Concrete Institute
ADA	Americans with Disability Act
ADAAG	Americans with Disability Act Accessibility Guidelines
ADT	Average Daily Traffic
ADOT	Arizona Department of Transportation
AHCW	Automatic Highway Crossing Warning
AHJ	Authority Having Jurisdiction
AIA	American Institute of Architects
AISC	American Institute of Steel Construction
AISI	American Iron and Steel Institute
ANSI	American National Standards Institute
APS	Arizona Public Service
APTA	American Public Transportation Association
AREA	American Railway Engineering Association
AREMA	American Railway Engineering and Maintenance-of-Way Association
ASCE	American Society of Civil Engineers
ASME	American Society of Mechanical Engineers
ASTM	American Society of Testing and Materials
AT&T	American Telephone and Telegraph Company

ATC	Automatic Train Control
ATC&C	Automatic Train Control and Communication
ATM	Automatic Teller Machine
ATMS	Advanced Transportation Management Systems
AW0	Assigned Weight Empty (Empty Weight)
AW1	Assigned Weight Seated load including operator (Seated Weight)
AW2	Assigned Weight 4 person per square meter
AW3	Assigned Weight 6 person per square meter
AW4	Assigned Weight 8 person per square meter
AWG	American Wire Gauge
AWS	American Welding Society
AWWA	American Water Works Association
°C	Degrees Celsius (Centigrade)
CADD	Computer Aided Design and Drafting
CBD	Central Business District
CBM	Certified Ballast Manufacturers
CCF	Coordination and Control Facility
CCTV	Closed Circuit Television
CCTX	Closed Circuit Television Transmission
CE	Clearance Envelope or Civil Engineer
CFR	Code of Federal Regulations
CLOMR	Conditional Letter of Map Revision
CMT	Construction Maintenance Tolerance
CP/EV LRT	Central Phoenix/East Valley Light Rail Transit
CPTED	Crime Prevention through Environmental Design

CREST	Highest point on a vertical curve with a positive grade into and negative grade out of a curve
Cs	Station Capacity
CTS	Cable Transmission System
CW	Chorded Wall, Contact Wire
CWH	Contact Wire Height
CWR	Continuous Welded Rail
d	Minimum Allowable Track Centers
DC	Direct Current
DF	Direct Fixation
DL	Dead Load
E	Superelevation
Ea	Actual Superelevation
ECU	Electronic Control Unit
E_{eq}	Equilibrium Superelevation
Eu	Unbalanced Superelevation
EIA	Electronic Industries Association
EIS	Environmental Impact Statement
EMC	Electro Magnetic Compatibility
EMI	Electro Magnetic Interference
EMP	Energy Management Panel
EPR	Ethylene Propylene Rubber
Eq	Total Superelevation
ETELS	Emergency Telephones
°F	Degrees Fahrenheit
F-C	Foot-Candle

FCC	Federal Communications Commission
FD&SM	Fire Detection and Suppression Monitoring
FM	Factory Mutual
FRA	Federal Railroad Administration
FTA	Federal Transit Administration
ft	Feet
g	Gravity
G1	Grade approaching a vertical curve
G2	Grade departing a vertical curve
GPS	Global Positioning System
HP	Horse Power
HR	Heavy Repairs
HVAC	Heating, Ventilation, and Air Conditioning
Hz	Hertz
ICBO	International Conference of Building Officials
ICEA	Insulated Cable Engineers Associations
ID	Derailment Impact
IEC	International Electrotechnical Commission
IEEE	Institute of Electrical and Electronics Engineers
IES	Illumination Engineering Society
in	Inch
I/O	Input/Output
IOS	Initial Operating Segment
ITE	Institute of Transportation Engineers
kcmil	Thousand Circular Mils
kV	Kilovolts

kVA	Kilovolt-Amperes
Lcomfort	Passenger Comfort Load
Lcrush	Passenger Crush Load
LED	Light Emitting Diode
LOMR	Letter of Map Revision
LOS	Level of Service
LPSCAT	Low Profile Simple Catenary Auto Tension
LPSCFT	Low Profile Simple Catenary Fixed Termination
Ls	Length of Spiral
LRT	Light Rail Transit
LRV	Light Rail Vehicle
Lvc	Length of vertical curve
MAG	Maricopa Association of Governments
MAS	Maximum Authorized Speed
MOE	Maintenance of Equipment Shop
MIL	Military
min	Minimum
MOE	Maintenance of Equipment
MOS	Minimum Operable Segment
MOW	Maintenance of Way
MSE	Mechanically Stabilized Earth
MSF	Maintenance and Storage Facility
MTBF	Mean Time Between Failures
MTP	Magnetic Ticket Processor
MUTCD	Manual of Uniform Traffic Control Devices
mv	Millivolt

MVA	Mega Volt Amperes
NACE	National Association of Corrosion Engineers
NAD	North American Datum
NEC	National Electrical Code
NEMA	National Electrical Manufacturers Association
NESC	National Electrical Safety Code
NFPA	National Fire Protection Association
NGS	National Geodetic Survey
NGVD	National Geodetic Vertical Datum
NOAA	National Oceanic and Atmospheric Administration
OCC	Operations Control Center
OCS	Overhead Contact System
OMSF	Operations, Maintenance, and Shop Facilities
OSHA	Occupational Safety and Health Administration
OTM	Other Track Material
OWF	Other Wayside Factors
P	Passenger Demand
P##	## Minute Passenger Demand
PA	Public Address
PC	Point of Curvature
PE	Preliminary Engineering
PITO	Point of Intersections of Turnout
PM	Project Manager or Preventive Maintenance
POP	Proof of Payment
ppm	Parts per Million
psf	Pounds per Square Foot

psi	Pounds per Square Inch
PT	Point of Tangen cy
Pt	Peak Train Passenger Demand
PTELS	Patron Assistance Telephones
PVC	Poly Vinyl Chloride
PVI	Point of Vertical Intersection
Pweekday	Weekday Passenger Demand
R	Radius
Rc	Running Clearance
RPTA	Regional Public Transportation Authority
Rv	Minimum radius of curvature
R/W	Right-of-Way
Sag	Lowest point on vertical curve with a negative grade into and positive grade out of the curve
SAV	Stand Alone Validators
SCADA	Supervisory Control and Data Acquisition
SCAT	Simple Catenary Auto Tension
Sps	Passenger Space
SRP	Salt River Project
SWAT	Single Wire Auto Tension
SWFT	Single Wire Fixed Tension
SYF	Shop Yard Facilities
Ta	Dynamic half width of vehicle away from curve centerline
TCP/IP	Transmission Control Protocol/Internet Protocol
TCRP	Transportation Cooperative Research Program
TES	Traction Electrification System

T/MWF	Track/Maintenance of Way Facility
TOM	Ticket Office Machine
TPSS	Traction Power Substations
Tt	Dynamic half width of vehicle toward curve centerline
TVM	Ticket Vending Machine
TWC	Train to Wayside Control
UBC	Uniform Building Code
UL	Underwriters Laboratories
UPRR	Union Pacific Railroad
UPS	Uninterruptible Power Supply
USDOT	United States Department of Transportation
V	Velocity
VDC	Volts Direct Current
VDE	Vehicle Dynamic Envelope
VMB	Variable Message Board
Vo	Operating Speed

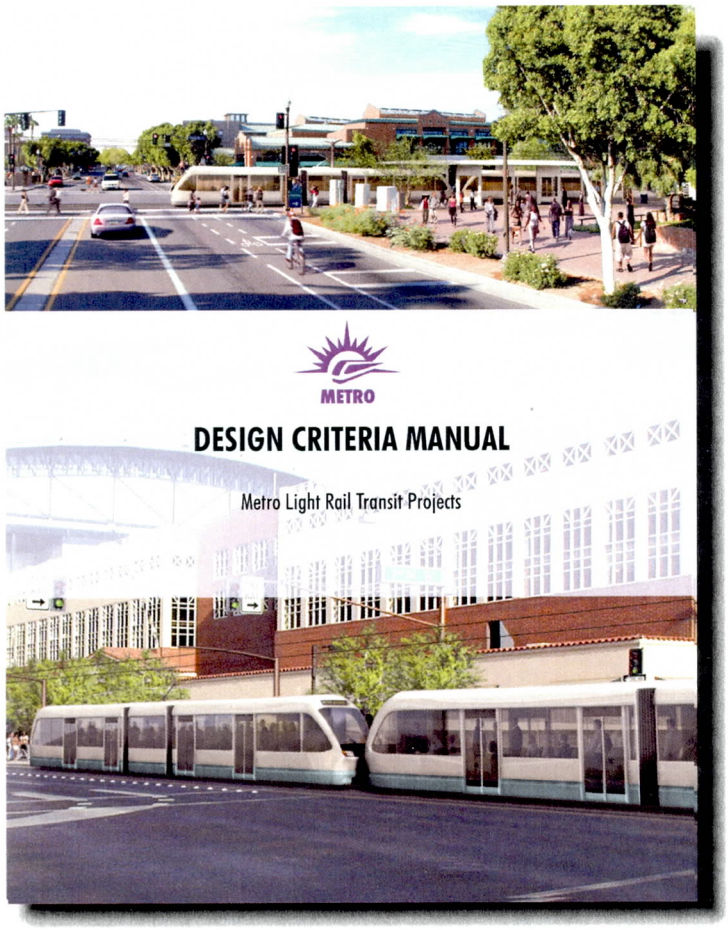

Chapter 1.0

General

1.0 GENERAL

1.1 METRO LRT Project

The purpose of the METRO LRT project is to:

- Improve the amount and reliability of transit service to the system;
- Improve regional transit connectivity in the system;
- Connect the system's major activity centers via a high capacity transit system;
- Reduce vehicle miles of travel in the system;
- Enhance the region's economic potential through increased mobility;
- Help attain a quality of life consistent with local, state, and federal initiatives by enhancing transit through supportive land use, planning and design strategies; and
- Provide expanded transportation choices.

1.2 Purpose and Scope

The purpose of this chapter is to establish the standards and design criteria for design of current and future METRO LRT Projects. Its purpose is to provide sufficient information to allow the development of designs, estimates of capital, operating, and maintenance costs, and determination of the potential impacts of operations and construction on adjacent properties.

These criteria and express requirements are intended to serve as guidelines, and do not substitute for engineering judgment and sound engineering practice. Specific exceptions may apply in special cases. Project designers are responsible for identifying any necessary departure from the criteria contained in this document and bringing it to the attention of the METRO Project Manager. Applications for such modifications should be submitted in writing to the METRO Project Manager. Any changes or additions to the criteria must be submitted for approval to METRO prior to use in the design. The process to follow for revising or deviating from the Manual is outlined in the document entitled "REQUEST FOR REVISION/DEVIATION TO THE DESIGN CRITERIA MANUAL" located in APPENDIX B.

1.3 Definitions

ASSEMBLY is a combination of subassemblies, components, or both fitted together to form an integrated functional unit.

AUXILIARY TRACK is a track other than a Main Track.

BILL ESCROW is a secure, temporary storage area in a Ticket Vending Machine (TVM) for paper currency that has been validated and accepted until a transaction is completed or cancelled.

BILL VALIDATOR is a component that authenticates the validity of bills inserted for payment of fare purchases.

BILL VAULT is a locked box within a TVM in which paper currency is stacked and held upon completion of a transaction.

BLOCK is a length of track with defined limits on which movements are governed by cab signals.

BURLINGTON NORTHERN-SANTA FE (BNSF) is a Class 1 operator of freight railroad trains and facilities under the jurisdiction of the Federal Railroad Administration.

CAR is an individual passenger-carrying unit which cannot operate individually, but must be connected and share equipment with other cars to form a vehicle.

CASH-ONLY MODE is a mode of TVM operation in which fare purchases can only be completed using valid paper currency or coins. CERTIFICATION is the action of determining, verifying, and attesting in writing to the qualifications of personnel and materials.

CHECKS are tests, measurements, verifications, or controls placed on an activity by means of investigations and examinations to determine satisfactory conditions, accuracy, safety, or performance.

COIN ACCEPTOR is a component that authenticates the validity of coins inserted for payment of fare purchases.

COIN CASSETTE is a recirculating coin storage unit within a TVM that receives coins from the coin acceptor and dispenses coins as change.

COIN VAULT is a locked box within a TVM in which coins that exceed the capacity of the coin cassettes are held upon completion of a transaction.

COMPONENT is a piece or part of an assembly or equipment (such as a mechanical or electrical part, valve, or support structure) that is combined with other components to form a system, subsystem, assembly, sub assembly, or part.

CONSIST is the number of cars in a train.

CONTROLLED POINT (CP) is a place designated in the Timetable where signals are remotely controlled by the Operations Control Center.

CREDIT CARDS/DEBIT CARDS are magnetically encoded instruments issued by financial institutions to purchase items.

CROSSOVER is a pair of turnouts with the track connecting their frogs arranged to form a passage between two nearby and generally parallel tracks.

CURRENT OF TRAFFIC is the assigned direction of a main track, as specified in the Timetable.

DEFECT is the non fulfillment of an intended usage requirement or reasonable expectation.

DERAIL is a track safety device to guide rolling stock and other on-track equipment off the rails at a selected spot as a means of protection against collisions or other accidents.

DIAMOND CROSSOVER: see DOUBLE CROSSOVER.

DIRECTION is the assigned orientation of a train movement on an LRT line. As a matter of convention, all movements shall be assigned as either *north south* or *east west*, regardless of the actual geographic orientation of the movement.

DOUBLE CROSSOVER is a pair of crossovers physically integrated to form a universal crossover; also referred to as a DIAMOND CROSSOVER.

EMPLOYEE STATION is a place where only employees and other authorized personnel may board and alight LRVs. EVENT is any action that results in a data record, or any hardware/software condition indication (e.g.: part failure indication, completion of an internal activity).

EXACT-CHANGE MODE is a mode of TVM operation in which the machine cannot dispense change to complete ticketing transactions (passenger must insert exact combinations of currency to complete fare purchases).

FAILURE is the malfunction of a component, assembly, or system resulting from a cause other than misuse, mishandling, or vandalism, requiring replacement to restore the intended function.

FARE is the requirement payment by a passenger for transportation on a transit network.

FARE COLLECTION AREA is a discrete cluster of fare collection equipment (e.g.: TVMs, SAVs) on or adjacent to a station platform. A single station may have multiple fare collection areas.

FARE COLLECTION SYSTEM is the procedures and devices used to collect fares and to accumulate and account for fares paid.

FARE-PAID AREA is a designated area within a station environment in which all passengers must be able to furnish proof of fare payment upon request.

FARE STRUCTURE is the system that determines how much fare is paid by passengers using the transit network under specified conditions.

FAULT CONDITION is the malfunction of a component, assembly, or system that is not a failure other than vandalism.

FEDERAL RAILROAD ADMINISTRATION (FRA) is a government authority under the U. S. Department of Transportation.

FIXED SIGNAL is a signal at a fixed location affecting the movement of trains (including LRT signal aspects under the control of a highway traffic signal appliance).

FLAG STOP STATION is an employee station where LRVs stop only upon signal or advance request.

FREQUENCY (*f*) is the number of train departures or arrivals per unit time (usually expressed in terms of the number of trains per hour).

FROG is a device used where two running rails intersect, providing flangeways to permit wheels and wheel flanges on either rail to cross the other.

GRADE CROSSING is a crossing or intersection of a railroad and a highway at the same level or grade.

HEADWAY is the time separation between successive train movements in the same direction (usually expressed in terms of minutes or seconds).

HIGH VOLUME STATION is a passenger station where weekday passenger demand represents ten percent or more of the system's weekday passenger demand.

IN-SERVICE MODE is a mode of TVM operation in which the machine is operational and available for ticket purchases.

INTERLOCKING APPLIANCES include switches, derails, locks, control mechanisms, moveable point frogs, or movable bridges.

INTERLOCKING is an arrangement of signals and interlocking appliances interconnected so that their movements must succeed each other in a prearranged sequence and through which movements are governed by interlocking signals in conjunction with cab signals.

INTERLOCKING LIMITS are the tracks between opposing home signals for an interlocking.

INTERLOCKING SIGNALS are the fixed signals of an interlocking.

INTERSECTION SIGNALS is a fixed signal, usually associated with grade crossings in semi-exclusive right-of-way and non-exclusive right-of-way operating environments, which govern LRT movements under the control of a highway traffic signal appliance.

LIGHT RAIL TRANSIT (LRT) is a light capacity transit mode utilizing predominately semi-exclusive right-of-way and electrically propelled rail vehicles capable of multiple unit operation.

LIGHT RAIL VEHICLE (LRV) is a self-propelled unit operated in revenue passenger service on the LRT system.

LINE CAPACITY is the maximum number of passenger spaces, which transit vehicles on a line can transport past a fixed point in one direction line per unit of time. Line Capacity typically equals either the minimum Way Capacity or the minimum Station Capacity of an LRT facility; which ever is the lesser.

LINE is the right-of-way and facilities over which LRT routes operate.

LOAD FACTOR is the ratio of passengers carried to offered passenger spaces.

MAINTAINABILITY is the ability to retain or restore an item to a specified functional state within a given time period when maintenance is performed in conformance with prescribed procedures and resources.

MAIN TRACK is a track designated by Timetable upon which train movements are authorized by timetable, cab, or interlocking signals.

MAXIMUM AUTHORIZED SPEED is the highest speed at which LRVs are permitted to operate, subject to safety, civil, operating environment, and other operational considerations that may warrant a further reduction in speed (e.g.: grade crossings, curves, signal, and interlockings).

METRO is defined as Valley Metro Rail, Inc.

NONCONFORMANCE is any part, procedure, specification, or drawing that does not conform to contractual or specified requirements.

NORMAL SPEED is the maximum authorized speed.

OPERATING ENVIRONMENT refers to the right-of-way category applied to a particular main track.

OPERATING SPEED is the speed of travel on the line which passengers experience.

OPERATIONS CONTROL CENTER (OCC) is a place controlling all train movements and operational functions on the LRT system and the primary personnel reporting and administrative center for the LRT system.

OUT-OF-SERVICE MODE is a mode of TVM operation in which the machine is not operational and available for ticket purchases due to error or failure rendering the machine inoperable.

PASSENGER DEMAND is the number of passenger trips forecasted to use the LRT service or the transit network per unit time based on patronage forecasts.

PASSENGER is a member of the public patronizing transit service.

PASSENGER LOADING STANDARD, COMFORT LOAD is the number of passenger spaces within an LRV represented by the sum of the seats plus the effective standee passenger spaces remaining, calculated at three (3) passengers per square meter [0.28 passengers per square foot]. This is the basic loading standard for LRT operations acceptable under most circumstances (approximately 156 passengers per LRV, depending on the design of the car).

PASSENGER LOADING STANDARD, CRUSH LOAD is the number of passenger spaces within an LRV represented by the sum of the seats plus the effective standee passenger spaces remaining, calculated at six (6) passengers per square meter [0.56 passengers per square foot]. This is a loading standard unacceptable for LRT operations under normal circumstances (approximately 238 passengers per LRV, depending on the design of the car).

PASSENGER LOADING STANDARD, DESIGN LOAD is the number of passenger spaces within an LRV represented by the sum of the seats plus the effective standee passenger spaces remaining, calculated at four (4) passengers per square meter [0.37 passengers per square foot]. This is a loading standard for LRT operations acceptable for limited durations following special events for periods not anticipated to exceed ten minutes (approximately 186 passengers per LRV, depending on the design of the car).

PASSENGER PLATFORM is the actual area within a passenger station used for boarding and alighting passengers.

PASSENGER SPACE is the area occupied by a passenger.

PASSENGER STATION is a place where passengers may board and alight LRVs. The term is inclusive of the passenger platforms, walkways, and surrounding environment.

PLATFORM, CENTER, is a platform located between two operating tracks where both edges are used for passenger boarding and alighting.

PLATFORM, SIDE, is a platform where only one edge is used for passenger boarding and alighting.

POCKET TRACK is a track adjacent to a main track used for meeting or passing of trains.

PROOF-OF-PAYMENT (POP) is a barrier-free method of fare collection relying upon passengers furnishing a proof of fare payment (e.g., validated ticket, prepaid pass, valid transfer) upon request while on-board transit vehicles or within designated fare-paid zones of stations. Compliance is monitored through random checking by designated transit employees or police.

PULL-THROUGH TERMINAL is a terminal so configured that trains reversing direction must do so by changing control cabs at a tail track situated beyond the passenger platform.

RAIL is a rolled steel shape designed to be laid end-to-end in parallel lines as part of a track.

RAILROAD is a travel way made of track.

RELIABLITY is the ability of an item to perform a required function under stated conditions.

RIGHT-OF-WAY, EXCLUSIVE is an operating environment in which transit vehicle operations are conducted independent of adjacent vehicular traffic movements except at controlled grade crossings where priority is generally yielded to transit vehicle movements. Exclusive rights-of-way may be at grade, elevated, or below grade. Access into the operating environment by other vehicles or people is prohibited except at defined, controlled grade crossings. Maximum authorized speeds are limited by LRV performance capabilities and site-specific civil or operating conditions that may warrant a further reduction in speed (e.g.: grade crossings, curves, signal, and interlockings).

RIGHT-OF-WAY, SEMI-EXCLUSIVE is an at-grade operating environment in which transit vehicle operations are influenced by adjacent vehicular and pedestrian traffic. Semi-exclusive rights-of-way are typically separated from other traffic by physical barriers such as non-mountable curbing or fencing. Access into the operating environment by other vehicles or people is prohibited except at defined, controlled grade crossings. Although maximum authorized speeds for semi-exclusive right-of-way are technically the same as exclusive right-of-way, the applied influences of adjacent vehicular and pedestrian traffic generally result in a significant reduction in overall speeds.

RIGHT-OF-WAY, SHARED EXCLUSIVE is an operating environment in which transit vehicle operations are conducted on shared trackage owned by the UPRR and on which freight rail operations will also occur.

RIGHT-OF-WAY, NON-EXCLUSIVE is an at-grade operating environment in which transit vehicle operations are fully integrated with adjacent vehicular and/or pedestrian traffic. Transit vehicles may be afforded preferential surface treatments (such as reserved travel lanes separated by lines, mountable curbs, or special signals) or occupy travel lanes mixed with other traffic. The maximum authorized speed for transit vehicle movements in a non-exclusive right-of-way operating environment shall not exceed the speed limit of the street that the alignment occupies, subject to civil limitations.

RIGHT-OF-WAY (R/W) is the strip of land on which the transit vehicles operate.

ROUTE is a consistent path and set of endpoints traversed by a transit vehicle in revenue service as described for the convenience of the traveling public.

SCHEDULE is that part of the Timetable which prescribes direction, number, frequency and times for movement of all scheduled trains.

SCHEDULED TRAIN is a train designated by the Timetable schedule.

SHOP is a facility for maintenance and repair activities.

SIGNAL ASPECT is the appearance of a fixed signal conveying an indication as viewed from the direction of an approaching train conveying an indication as viewed by the train operator in the control compartment.

SIGNAL INDICATION is the information conveyed by the aspect of a signal.

STAND-ALONE VALIDATOR (SAV) is a tamper-proof assembly to time-stamp pre-purchased tickets at the time of use.

STATION is a place designated by the Timetable by name.

STATION CAPACITY is the maximum number of passenger spaces, which transit vehicles can transport to or from a particular passenger station in one direction line per unit of time.

STREET CONDITION BANK NOTES are paper currency found in everyday use, excluding approximately five (5) percent of which are not torn, creased, crumpled, folded, or worn.

STRINGLINE (a.k.a.: time-distance diagram) refers to a graphical representation of train movements and operating schedules with time plotted along the horizontal axis and distance plotted along the vertical axis.

STUB TERMINAL is a terminal so configured that trains reversing direction must do so by changing control cabs at the passenger platform.

SWITCH is a pair of moveable rails with their fastenings and operating rods, providing a connection over which to divert the movement of rolling stock and other on-track equipment.

TAIL TRACK is an auxiliary track usually associated with a pull-through terminal primarily provided to allow trains to change direction without occupying tracks in active revenue service.

TERMINAL is a passenger station located at the end of a route.

TICKET is a printed fare instrument that is used to verify payment of transportation aboard transit vehicles.

TICKET OFFICE MACHINE (TOM) is a secure, employee-operated, computer controlled assembly that prints and issues tickets, and accounts for ticket sales that supplements station-based TVM sales at remote sales offices and under special circumstances.

TICKET VENDING MACHINE (TVM) is a secure, passenger-operated, station-based, and computer controlled assembly that prints and issues tickets, accounts for ticket sales, and temporarily stores monies inserted by passengers.

TIE is a transverse support to which rails are fastened to keep them in line, gauge, and grade, usually fabricated out of wood or concrete.

TIMETABLE is a printed, controlled document, which defines the Operating Schedule and Special Instructions that govern the movement of trains.

TRACK is the rail, ties, rail fastenings, hardware and roadbed between points four feet outside of a parallel pair of rails so configured as to support and allow the movement of rolling stock and other on-track equipment.

TRAIN is a set of one or more System vehicles coupled together and operated as a single unit. For this project, all trains shall be 1) configured with the same types of vehicles, and 2) be of equal length.

TRAIN OPERATOR is the individual directly in control of a train.

TRANSFER CENTER is a passenger station at which the means of access for the majority of boarding passengers is another transit vehicle.

TRANSIT NETWORK is the collective services provided by the LRT and interrelated modes of transportation.

TRANSIT SERVICES are those aspects of the transit network seen and experienced by actual and potential passengers.

TURNOUT is a particular grouping of two tracks joined together with a frog and switch so arranged to allow for the transfer of rolling stock and on-track equipment to cross from one track to another.

UNION PACIFIC RAILROAD (UPRR) is a Class 1 operator of freight railroad trains and facilities under the jurisdiction of the Federal Railroad Administration.

VEHICLE is the smallest passenger carrying unit that can operate individually, which may be a single unit or a permanently coupled set of dependent cars. A vehicle can also be coupled with one or more other vehicles to form a train.

VERIFICATION is the act of reviewing, inspecting, testing, checking, auditing, or otherwise establishing and documenting whether items, processes, services, or documents conform to specified requirements.

WAY CAPACITY is the maximum number of passenger spaces which transit vehicles on a line can transport past a particular point in one direction line per unit of time without stopping.

YARD is a system of tracks used for making up trains and the storage of LRVs and other rolling stock.

1.4 Climate Conditions

The Phoenix metropolitan area is located in the Sonoran Desert. Climate conditions can be varied, however summer temperatures are hot with an average high temperature of 105° Fahrenheit (F) and a record high of 122° F recorded in 1990. The metropolitan area has mild winters with the average low of 41° F and a record low of 17° F recorded in 1950.

Like typical deserts, the Phoenix metropolitan area is arid with the exception of the monsoon (change of air flow from the south) during late June to mid September. The monsoon flow raises dew points above 55° F. The average annual rainfall is 7.66 inches with most of it coming during the Monsoon months. Summer storms have the propensity for development of Towering Cumulus clouds with considerable thunder and lighting. In a few cases, large storms will develop microbursts with strong downward and outward winds (50 miles per hour plus) and heavy down pours.

1.5 System Technology Description

The rail transit technology planned for the METRO LRT project is characterized as a LRT system. The system will use articulated 70 percent low-floor vehicles, powered by an overhead contact system, and running on a fixed guideway with steel wheels on steel rails. Trains will accommodate up to three-car trains. Trains will run on exclusive and semi-exclusive right-of-ways.

1.6 Systemwide Goals

The purpose of the METRO LRT Project is to provide the citizens of the region with the benefits of improved public transportation in a cost-effective, environmentally sensitive, and socially responsible manner. To this end, the following systemwide policies concerning proven hardware, design life, and service integration shall be adhered to.

1.6.1 Proven Hardware

The design of the METRO LRT Project shall incorporate proven subsystems hardware and design concepts. All of the major subsystems, including vehicles, track, signaling, communications, fare collection and traction power equipment, shall be procured from established manufacturers, have a documented operating history of previous and current usage, and be available off the shelf, to the greatest extent possible. The same requirements shall apply to spare parts. Waiver of these requirements will be considered only where the alternative subsystem offers substantial technical and cost advantages, is in an advanced state of development, and has accumulated substantial test data under near-revenue conditions and as approved by METRO.

1.6.2 Design Life

The transit system's fixed facilities (structures, buildings, track system, traction power, and overhead catenary system) shall be designed for continued operation over a minimum period of 50 years before complete refurbishment and renovations are necessary due to wear and tear and obsolescence. The 50-year service life shall be used unless stated otherwise for particular pieces of equipment or systems in other chapters.

Major fixed system equipment (substation gear, shop machinery, etc.) and light rail vehicles (LRVs) shall be designed for continued operation over a minimum period of 30 years before complete replacement becomes necessary, provided that approved maintenance policies are followed.

1.6.3 Service Integration

The LRT system shall be designed as an integral part of the overall regional transportation system. Specific provisions shall be made for the efficient transfer of passengers to and from private and other public transportation modes.

Transfer facilities, including park-and-ride, are currently being studied throughout the valley to provide an effective interface with the various transportation modes based on use and ridership. These transfer facilities shall include LRT to bus, personal vehicle to bus, LRT to LRT and bus to bus.

LRT station areas, on line and off line, shall be located and finalized during the Preliminary Engineering Phase to assure the best and most convenient transfer for the traveling public. The LRT development shall also provide a number of park-and-ride facilities along its corridor for easy access.

1.6.4 Urban Design Guidelines

The Urban Design Guidelines define a set of shared values and design priorities for the entire system that METRO, design review boards and system designers have agreed upon with the Communities that the system serves. The Guidelines will assist METRO in establishing a level of excellence in the design of all system elements and shall be used as a performance checklist by the METRO in the design review process.

1.7 Concurrent Non Project Activities (CNPA)

Concurrent Non Project Activities (CNPA) are activities that are implemented as part of the LRT project that deviate from the standard, defined by this Design Criteria Manual (DCM).

CNPA activities are created due to an agency's special requirements that are not related to infrastructure needs of METRO. Consequently the resulting cost of CNPA's are eligible for cost sharing by the member agencies.

An example of a typical CNPA is illustrated below:

1.7.1 Waterline Clearance

Section 3.2.2 of the DCM defines the standard clearance of water lines from the LRT guideway to be 10 feet. However, the City of Phoenix (COP) requires that the separation distance between a waterline and the LRT guideway to be 16 feet. This is typically called the "16 feet rule" by COP.

Therefore an eligible CNPA for the COP would be the "16 feet rule" for waterline.

CNPA activities must be identified as early in the design process as possible. METRO requires the designers to complete a CNPA review during the 30 percent design submittal. Identification of a CNPA will be achieved by completing the deviation form (ENG-003 Rev 1) that is included in Appendix B of the DCM.

These Deviation forms must be included as part of the designers regularly scheduled design submittal reports starting with the 30% submittal.

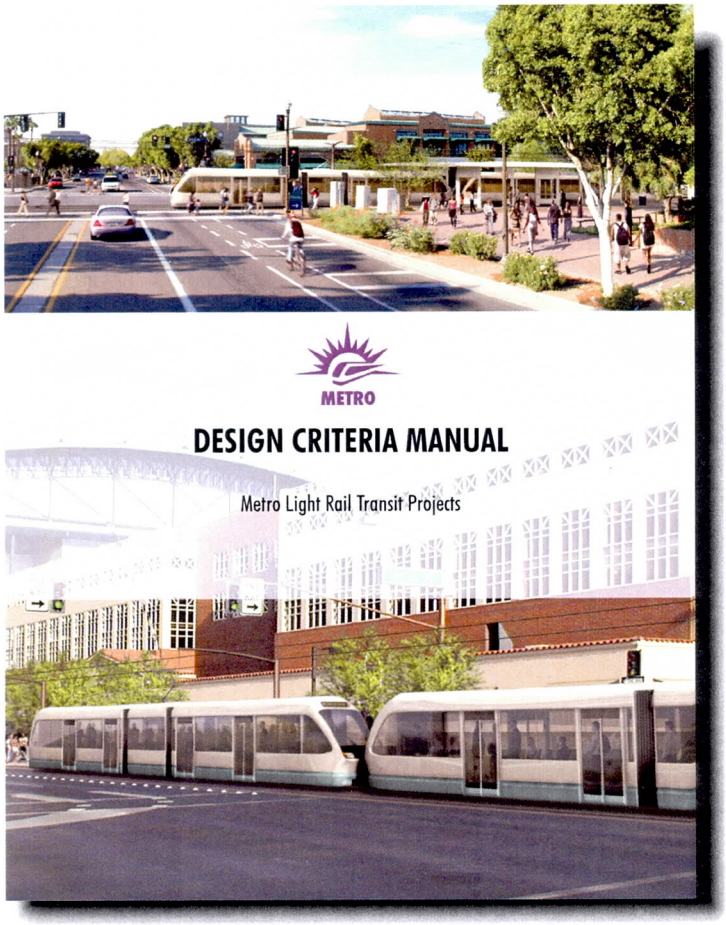

Chapter 2.0

Track Alignment and Structure Clearance

2.0 TRACK ALIGNMENT AND STRUCTURE CLEARANCES

2.1 Purpose and Scope

The purpose of this Chapter is to establish the standards and design policies for the basic track alignment (vertical and horizontal) and structure clearance criteria to be used in the design of the METRO LRT project.

It includes criteria for the design of LRT system alignments and establishes the minimum dimensions required to insure proper clearances between the track and wayside structures. For specific Vehicle Clearance Envelope and charts, refer to Chapter 8 Vehicle – Paragraph 8.4 Vehicle Dynamic Swept Envelopes.

The LRT design must allow for the safe travel through restrictive alignments typical of urban central business districts, including rights of way shared with automotive traffic. LRVs are also typically designed to travel at relatively high operating speeds in suburban and rural settings.

In this chapter, terms like Desirable, Minimum, and Absolute Minimum are used to denote METRO's order of preference for track alignment selections.

- Desirable shall be considered METRO's preferred design limits.
- Minimum shall be considered METRO's design minimum when restrictions prohibit the use of Desirable. METRO should be made aware of minimum design, but no approval is required.
- Absolute Minimum shall only be used at the approval of METRO or its representative.

Criteria for the use of shared right-of-way with railroads shall conform to joint Federal Railroad Administration/Federal Transit Administration (FRA/FTA) policy. As of March 2007, shared right-of-way and/or tracks are not anticipated or required.

2.2 Track Alignment

The criteria set forth in this chapter for the LRT track alignments have been established to allow the provision of safe, economical, efficient and comfortable transportation for passengers while maintaining adequate factors of protection with respect to overall operation, maintenance, and vehicle stability. They have been developed by utilizing accepted engineering practices, the experiences of currently operating LRT systems and set parameters considering the light rail transit vehicles.

It includes criteria for the design of horizontal track alignment, vertical track alignment, alignment through areas of special trackwork, and horizontal and vertical clearance requirements. Except for areas where the LRT operates within or adjacent to surface streets, the track alignment shall be designed to accommodate the maximum design speed of 55 miles per hour (mph). Physical constraints along various portions of the system, together with other design limitations, may preclude achievement of this objective. Where the LRT operates within or adjacent to surface streets, the maximum design speed for the track alignment shall be limited to the legal speed of the parallel street traffic.

Track Extensions to the system should have survey track stationing beginning with a station equation and increase in the direction of the extension. Extension into Mesa should continue with the initial segment stationing. Stationing protocol shall remain independent of any mile posting system which may be instituted for operational purposes and which may actually run in the opposite direction from the engineering stationing.

Extension survey stationing from the initial LRT segment shall commence at the connection (end of track or point of switch, should a turnout be required) off the existing track.

When viewing any LRT alignment looking in the direction of increasing stationing, the track on the viewer's right shall be designated as the "Right Track" or Track "R" while the track to the left shall be designated the "Left Track" or Track "L". Each route segment shall be stationed independently based on the centerline of the Right Track. Stationing shall be continuous along the length of the Right Track and this track shall be the basic control for locating all other system facilities along the route. Independent stationing shall be required for the Left Track when tracks are not parallel or concentric, where widened track centers are required around curves, where parallel tracks have independent profiles, or where tracks are in separate track structures. Where curvature results in different stationing lengths at the end of a curve, the Left Track stationing shall be equated to the Right Track stationing at the spiral to tangent (ST) point of whichever track has the spiral which extends the furthest ahead station. Geometrics shall be developed for all tracks.

Where the LRT system includes at-grade portions where LRVs will operate in mixed traffic with rubber-tired vehicles in surface streets, the applicable geometric design criteria for such streets shall be met in the track alignment.

The chapter details minimum standards and design policies to govern the engineering, materials, and construction standards for trackwork and its interfaces with other elements of the METRO system.

All track material, special trackwork, and practices specified herein shall govern the design of the LRT system and contain the interfacing of trackwork with other elements of the system, including but not limited to, trackway, bridges, box structures, transition slabs, signal system, drainage, etc. Except for the requirements established in these criteria and METRO's CADD Standards, all construction plans and specifications shall generally follow the TCRP Report 57 *Track Design Handbook for Light Rail Transit*; the AREMA *Manual for Railway Engineering* and *Portfolio of Trackwork Plans*; and the APTA *Guidelines for Design of Rapid Transit Facilities*, and modified as necessary to reflect the physical requirements and the operating characteristics of the METRO system.

2.2.1 Horizontal Alignment

The alignment of mainline horizontal tracks shall be composed of a series of tangents joined together by spiralized curves or circular curves, unless otherwise approved by METRO. Spiral transitions in yards and service areas are desired, but not required when speeds are 10 miles per hour or less. However, they are required for speeds greater than 10 miles per hour.

Actual superelevation shall be used to maximize running speeds where possible. The nomenclature used to describe horizontal alignments shall be consistent with that illustrated in Figure 2-1 at the end of this Chapter.

In exclusive right-of-way, the design speed shall be the maximum attainable. In semi-exclusive and non-exclusive right-of-way, the track alignment shall be designed to accommodate the legal posted design speed of the parallel street traffic. Maximum speed through shared intersections shall not exceed requirements of Manual of Uniform Traffic Control Devices (MUTCD) for un-gated crossings; currently 35 mph.

2.2.1.1 Mainline Track Tangent Alignment

The minimum length of tangent track between curved sections of track and track curves of reverse direction shall be as follows:

Condition	Tangent Length
Desirable	200 feet
Minimum	100 feet or 3 times the design speed in mph, whichever is greater
* Absolute Minimum	50 feet

(* Not to be used without prior approval from METRO)

For curves oriented in the same direction, it is preferable to incorporate a single simple curve, compound curve(s) or compound spiral rather than have a short tangent between curves. If a tangent is required, the minimum tangent length requirement for the reverse curves will apply.

Station Stops

At pedestrian Station Stops, the horizontal and vertical track alignments shall be tangent throughout the entire length of the station platform except where authorized by METRO for certain locations where it's been evaluated that the design can comply with operating and safety requirements. The tangent shall be extended beyond both ends of the Station platform as follows:

Condition	Tangent Length
Desirable	75 feet
Minimum	60 feet
*Absolute Minimum	45 feet

(* Not to be used without prior METRO approval)

The placement of a portion of a curved track within the Station platform limits shall require prior METRO approval.

The normal length of a Station platform is 280 feet (3 car trains).

The normal platform width for a single track or wayside station platform location shall be 14 feet desirable, and 12 feet minimum. The normal width for a double track center station platform shall be 18 feet desirable and 16 feet 4 inches minimum.

Special Trackwork

The minimum length of tangent track preceding a point of switch and beyond the frog shall be as follows:

Embedded Mainline Track:

Condition	Tangent Length
Desirable	45 feet
Minimum	25 feet
*Absolute Minimum	10 feet beyond bathtub limits

Direct Fixation or Ballasted Mainline Track:

Condition	Tangent Length
Desirable	45 feet
Minimum	25 feet
*Absolute Minimum	beyond the last long concrete tie limit

Ballasted Yard Track:

Condition	Tangent Length
Desirable	45 feet (stock rail length projections + one 39' rail length
Minimum	8 feet
*Absolute Minimum	Within last long 16 foot concrete tie

(These turnouts and rails to be procured as a layout complete with concrete ties)

2.2.1.2. Mainline Track Curved Alignment

Intersections of horizontal tangents shall be connected by spiral transition curves or simple circular curves.

Circular Curves

Minimum radii for in-street LRT mainline trackwork shall be designed to permit the LRVs to operate at no less than the speed limit for that street section, except when the LRT is turning from one street to another or in the immediate vicinity of a Station.

Circular curves shall be specified by their radii.

The minimum radii for mainline track curves shall be as follows:

Location	Minimum Curve Radius
At-grade ballasted, direct fixation and bridge segment:	300 feet desirable
Embedded In-street:	100 feet desirable (for alignment at turning intersections only) *82 feet absolute minimum (meets vehicle minimum criteria) *(Not to be used without prior METRO approval)

Curve alignments that include circular curve and spirals shall be calculated by establishing the greatest spiral length using the formulas that follow. There is no minimum length for a central circular curve except the rate of twist on the vehicle based on superelevation runoff.

At reverse spiral curves with or without superelevation, the minimum tangent length shall be as specified in Mainline Track Tangent Alignment section.

Yard Track

The minimum radii for yard and service tracks shall be as follows:

Location	Minimum Radius
Yard and service tracks:	100 feet desirable *82 feet absolute minimum *(Not to be used without prior METRO approval)

Superelevation

Superelevation is defined as the difference in inches of the top of rail plane when the outer (high) rail is rotated (raised) above the inner (low) rail. This is called actual superelevation. Mainline track curves shall be designed with superelevation to permit desired design speeds to be achieved without resorting to an excessively longer curved radius.
Actual superelevation (E_a) is the physical height difference between the held low rail position and the rotated high rail position holding the top of rail plane position.

Equilibrium superelevation (E_q) is reached when both wheels bear equally on the rails, where q is sufficient to bring the resultant centrifugal force to right angles to the plane of the top of rails.

Unbalanced superelevation (E_u) is the theoretical calculated value of non superelevation height. Due to varying speeds of trains on the tracks, actual superelevation is reduced by introducing no superelevation or unbalanced superelevation up to 3 inches for both safe and comfortable operation.

The design speed for a given horizontal curve shall be based on its actual radius, length of spiral transition, and actual and unbalanced superelevation through the curve as described here. The design speed criteria stated herein is based on a maximum lateral acceleration of the passenger of 0.1 g.

Equilibrium superelevation shall be determined by the following equation:

$$E_q = E_a + E_u = 3.96\left(\frac{V^2}{R}\right)$$

Where E_q = total amount of superelevation required for equilibrium, in inches

E_a = actual superelevation, in inches

E_u = unbalanced superelevation, in inches

V = design speed through the curve, in mph

R = radius of track curve, in feet

In practice, the full equilibrium superelevation (E_q) is rarely installed in track, as doing so would require excessively long spiral transition curves. It could also produce passenger discomfort on board a train that is moving much slower than the design speed or stopped in the middle of a steeply superelevated curve. Therefore, only a portion of the calculated E_q, the actual superelevation E_a, shall be designed into the curve. The difference between the equilibrium superelevation and the actual superelevation is called the unbalance, and is designated as E_u.

The desired relationship between E_a and E_u shall be defined by the following equation:

$$E_u - \left(\frac{E_a}{2}\right) = 1$$

Desirable values of actual superelevation (E_a) shall be determined by the following formula:

$$E_a = 2.64\left(\frac{V^2}{R}\right) - 0.66$$

Use of the above equation shall result in the gradual introduction of both actual and unbalanced superelevation and avoid unnecessary lateral acceleration of LRVs and their passengers.

The calculated values for actual superelevation shall be rounded to the nearest 1/4-inch. For a total superelevation ($E_a + E_u$) of 1 inch or less, no actual superelevation (E_a) shall be applied. In specific cases where physical constraints limit the amount of E_a, which can be introduced, a maximum of 1-1/2 inch of E_u shall be permitted without introduction of E_a.

Actual superelevation (E_a) shall be attained and removed linearly throughout the full length of the spiral transition curve by rotating the top of rail plane (raising the outside rail) while maintaining the inside rail at the profile grade.

The desirable and maximum values for actual and unbalanced superelevation shall be as follows:

Superelevation		**Values**
E_a	=	4 inches desirable *
E_u	=	3 inches desirable *

(* Not to be exceeded without prior METRO approval)

Yard and secondary tracks shall be marginally superelevated to compensate for track settlement. In-street trackage shall be superelevated where practical. Superelevation shall be avoided through road crossings and to the greatest extent possible through street intersections.

Spiral Transition Curves

Spiral transition curves shall be used in order to limit lateral acceleration during the horizontal transition of the LRV as it enters the curve and to develop the superelevation of the track. Spiral transition curves shall be clothoid spirals as depicted in Figure 2.1 and as defined by Hickerson[1]. Spirals shall be required on all mainline track horizontal curves with a radius less than 10,000 feet.

The desirable lengths of spiral shall be the greater of the lengths determined from the following formula (rounded up to the nearest 10 feet), but preferably not less than 60 feet:

$$L_s = 1.10E_aV$$

$$L_s = 0.82E_uV$$

$$L_s = 42E_a \text{ [2]}$$

Where: L_s = spiral length in feet

V = design speed through curves in mph

E_a = actual superelevation in inches

E_u = unbalanced superelevation in inches

Where geometric conditions are extremely restricted, such as in unsuperelevated, embedded track in a Central Business District (CBD) area, the spiral length may be reduced to the absolute minimum of 30 feet if prior METRO approval has been obtained.

A spiral transition is desired, but not required for yard and secondary tracks where design speeds are less than 10 mph. Yard and secondary tracks, which have design speeds greater than 10 mph, shall have spirals, and superelevation is required when at all feasible.

---

[1] Thomas F. Hickerson, Route Location Design, 5th ed (New York: McGraw Hill 1964) pp 168-171, 374-375

[2] It has been determined that superelevation length with low floor cars having independent rotating wheels on the center truck should not be less than 1:500 or 1 inch in 42 feet.

Under normal situations, superelevation shall be introduced and run off uniformly through the length of a spiral transition curve. In extraordinary cases where METRO has granted approval for the introduction of superelevation in a curve with no spirals, the superelevation shall be developed along the tangent immediately preceding the point of curvature (PC), and shall be run out in the tangent immediately beyond the point of tangency (PT). The transition length is then determined from the minimum spiral length formula of this subsection. The maximum amount of superelevation that may be run out in tangent track shall be 1 inch.

Compound Circular Curves

Where compound curves are used, they shall be connected by a spiral transition curve. The absolute minimum spiral length shall be the greater of the lengths as determined by the following (rounded up to the next 10 feet):

$$L_s = 42\ (E_{a2} - E_{a1})$$

$$L_s = 0.82\ (E_{u2} - E_{u1})\ V$$

$$L_s = 1.10\ (E_{a2} - E_{a1})\ V$$

Where: L_s = minimum length of spiral, in feet.

E_{a1} = actual superelevation of the first circular curve, in inches

E_{a2} = actual superelevation of the second circular curve, in inches

E_{u1} = unbalanced superelevation of the first circular curve, in inches

E_{u2} = unbalanced superelevation of the second circular curve, in inches

V = design speed through the circular curves, in mph

Spiral transition curves connecting compound curves are not required when both (E_a2-E_a1) and (E_u2-E_u1) are less than 1 inch. For compound circular curves without a spiral, the change in superelevation shall be run out entirely within the curve of the larger radius.

Reverse Curves

Where extremely restrictive horizontal geometrics make it impossible to provide sufficient tangent length between reversed superelevated curves, the curves may meet at a point of reverse spiral upon approval from METRO. The point of reverse spiral shall be set so that:

$$L_{s1} \times E_{a\,2} = L_{s2} \times E_{a1}$$

Where E_{a1} = actual superelevation applied to the first curve in inches

E_{a2} = actual superelevation of the second circular curve, in inches

L_{s1} = the length of the spiral leaving the first curve in feet

L_{s2} = the length of the spiral entering the second curve in feet

The superelevation transition between reversed spirals shall be accomplished by sloping both rails of the track throughout the entire transition spiral as shown in Figure 2-2. Note that through the transition, both rails will be at an elevation above the theoretical profile grade line. This method of superelevation transition creates additional design considerations including an increased ballast section width at the point of reverse spiral and possible increased clearances.

Such issues shall be investigated in detail and any impacts identified in the waiver request to METRO.

On embedded tracks in city streets, if alignment constraints make providing a tangent between two superelevated spiraled reversed curves impossible, a tangent shall not be required provided that the operating speed is limited so that the lateral acceleration is held to maximum of 0.1g.

Note: Any locations that may require a combination of minimum radius and maximum unbalanced superelevation are to be brought to the attention of METRO.

2.2.2 Vertical Alignment

The vertical track alignment shall be composed of constant grade tangent segments connected at their intersection by parabolic curves having a constant rate of change in grade. The profile grade line in tangent track shall be along the centerline of track between the two running rails and in the plane defined by the top of the two rails. In curved track, the inside rail of the curve shall remain at the profile grade line and superelevation achieved by rotating the top of rail plane (raising the outer rail) about the inner rail. The nomenclature used to describe vertical alignments shall be consistent with that illustrated in Figure 2-3.

2.2.2.1 Vertical Tangents

The minimum length of constant profile grade between vertical curves shall be as follows:

Condition	Minimum Length
Desirable	200 feet
Minimum	100 feet or 3 times the design speed in mph, whichever is greater
*Absolute Minimum	40 feet

(*Not to be used without prior METRO approval)

In CBD areas, where the need to conform to existing street profiles makes compliance with the above criteria economically unfeasible, the above requirement may be waived with prior approval of METRO. Where a tangent between vertical curves is shorter than 40 feet, consideration shall be given to reverse or compound vertical curves to avoid abrupt changes in vertical acceleration, which could result in both passenger discomfort and excessive vehicle suspension system wear and tear.

The profile at Stations shall be on a vertical tangent that extends 40 feet beyond each end of the platform.

2.2.2.2 Vertical Grades

The following profile grade limitations shall apply:

Mainline Tracks

Maximum (sustained grade unlimited length)	4.0%
Maximum (sustained grade with up to 1500 feet between PVIs of vertical curves)	6.0%
Minimum (for drainage on direct fixation track)	0.2%

Station Area

Desirable	0.00%
Maximum	1.0%

Minimum grade is specified at Stations provided adequate track drainage can be maintained. In CBD areas, the existing street profile may govern the profile grade within the Station. In this case, the profile grade may exceed the values above, but shall be restricted to an absolute maximum of 2 percent.

Shop Tracks

Desirable	0.0%
Maximum	0.5%

Yard Storage & Pocket Tracks

Desirable	0.5%
Maximum	0.75%

All track grades entering the yard shall either be sloped downward away from the mainline, or dished to prevent parked rail vehicles from rolling onto the mainline. For yard storage tracks, it is desirable to have a slight grade of 0.5 percent, to achieve good track drainage at the subballast level.

It is desirable that the profile grade of a stub end storage track descends toward the stub end, and, if adjacent to a mainline or secondary track, is curved away from that track at its stub end. If it is necessary for the profile grade of a storage track to slope up toward the stub end, the grade shall not exceed 0.2 percent.

Tracks located in the canopy (barn) area and the maintenance shop building area shall be level.

2.2.2.3 Vertical Curves

All changes in grade shall be connected by vertical curves. Vertical curves shall be defined by parabolic curves having a constant rate of change in grade. The nomenclature used to describe vertical curves shall be consistent with that illustrated in Figure 2-3.

Vertical Curve Lengths

The minimum length of vertical curves shall be determined as follows:

$$L = 100\ (G_1 - G_2) \text{ for } V \geq 35$$

$$L = 50\ \ (G_1 - G_2) \text{ for } 15 \leq V < 35$$

Absolute minimum length

$$\text{Crest curves} \quad LVC = \frac{AV^2}{25}$$

$$\text{Sag curves} \quad LVC = \frac{AV^2}{45}$$

Where LVC = length of vertical curve, in feet

A = $(G_2 - G_1)$ = algebraic difference in gradients in percent

G_1 = percent grade of approaching tangent

G_2 = percent grade of departing tangent

V = design speed, in mph

Both sag and crest vertical curves shall have the maximum possible length, especially if approach and departure tangents are long. Vertical broken back curves and short horizontal curves at sags and crest of vertical curves shall be avoided.

The minimum equivalent radius of curvature for vertical curves located on mainline tangent track shall not be less than 820 feet for crests and 1150 feet for sags. This equivalent radius of curvature can be calculated from the following formula:

$$R_v = \frac{LVC}{0.01(G_2 - G_1)}$$

Where R_v = minimum radius of curvature of a vertical curve in feet.

Minimum vertical curve length and/or design speed may be governed by the overhead contact system (OCS) due to the maximum permissible rate of separation of convergence between the track grade and the contact wire grade. Coordination with the OCS designer shall be required to assure compliance with this limitation.

a. Compound Vertical Curves

Compound and unsymmetrical vertical curves shall be permitted provided each curve conforms to the requirements and prior METRO approval has been obtained.

b. Reverse Vertical Curves

Reverse vertical curves shall be permitted; provided each curve conforms to the requirements stated in Section 2.2.2.3 and prior METRO approval has been obtained.

c. Combined Vertical and Horizontal Curvature

Where possible, areas of combined vertical and horizontal curvature shall be avoided. Where areas of combined vertical and horizontal curvature cannot be avoided, the geometrics shall not be more restrictive than 82-foot radius horizontal curve combined with an 820-foot equivalent radius vertical crest curve.

2.3 Track Clearance Requirements

The current LRV operating on the system is outlined in Chapter 8 – Vehicle. Specific vehicle information and details are included in that section.

2.3.1 General

This section establishes the minimum dimensions required to assure proper clearances between the LRVs and the transit structures and wayside obstructions involved. All designs shall meet or exceed the minimum clearance criteria as specified herein. Since the provision of adequate clearances for the safe passage of LRVs is one of the most fundamental concerns inherent in the design of the track system, it shall be rigorously monitored during both the design and construction phases.

For preliminary and final design, the following generalized lateral clearances and track center-to-center distances shall be adhered to. These dimensions apply to tangent and track curve radii less than 1,000 feet. In track curves, less than 1,000 foot radius, a more detailed clearance calculation shall be prepared. Where unusually restrictive or sensitive conditions warrant a more detailed calculation, the methodology presented in Chapter 8 Vehicles – Vehicle Dynamic Envelope and Sections 2.3.2 through Sections 2.3.5 shall be utilized.

Location	Desirable	Minimum
• Standard ballasted/direct fixation or embedded track, center to center spacing with center overhead contact system poles	14'-0"	13'-6"
• Standard ballasted/direct fixation or embedded track, center to center spacing without center overhead contact system poles	13'-0"	12'-0"
• Clearance centerline of track to a retaining wall or fence with side maintenance and emergency evacuation path	10'-0"	*9'-0"
• Distance between centerline of LRT track and adjacent centerline of railroad track assuming fencing between LRT track and railroad track.	25'-0"	20'-0"
• Centerline of track to outer face of curb of adjacent traffic lane	8'-0"	6'-6"

* 9'-0" unless otherwise authorized by METRO

2.3.2 Track Clearance Envelope (Horizontal)

The Track Clearance Envelope (TCE) is defined as the space occupied by the Vehicle Dynamic Envelope (VDE from Chapter 8 – Vehicles Section 8.4.1 and 8.4.2) plus the effects of Other Wayside Factors (OWF) including construction and maintenance tolerances for track and various facilities, plus Running Clearances (RC). This relationship can be expressed as follows:

$$TCE = VDE + OWF + RC$$

The Track Clearance Envelope represents the space into which no physical part of the system (other than the LRV) shall be placed, constructed or protruded. The Track Clearance Envelope shall be referenced from the centerline of track at the top of rail plane.

The Track Clearance Envelope outline with Vehicle Dynamic Envelope outline is shown in Figure 2-4.

2.3.2.1 Vehicle Dynamic Envelope

The Vehicle Dynamic Envelope developed in Section 8 Vehicles shall be used to develop the Track Clearance Envelope. The Vehicle Dynamic Envelope begins with the cross sectional outline of the static vehicle. The dynamic outline of the vehicle is then developed by making allowances for the car body movements that occur when the vehicle is operating on level, tangent track. In addition to car body movements on level, tangent track, the effects of track curvature and superelevation must also be considered to allow additional space for vehicle outswing (overhang on curve) and inswing (mid ordinate on curve) and for vehicle lean, when the track curves are superelevated.

The key vehicle characteristics used to outline the vehicle are shown in Chapter 8 Vehicle Section 8.4.1 and Section 8.4.2.

The Track Clearance Envelope through turnouts shall be calculated based on the centerline radius of the turnout.

2.3.2.2 Other Wayside Factors

Other Wayside Factors (OWF) is the second component of the Track Clearance Envelope. Other Wayside Factors is the sum of certain Construction and Maintenance Tolerances (CMT) plus a Chorded Wall (CW) construction factor where applicable. This relationship can be expressed as follows:

$$OWF = CMT + CW$$

The following define the Other Wayside Factors and are applicable to and shall be included in the horizontal component of the Track Clearance Envelope.

Construction and Maintenance (Location) Tolerances (CMT)	Distance
• Construction Tolerance Along Proposed Soldier Pile and Lagging Wall	6 inches
• Construction Tolerance Along All Other Proposed Structures	2 inches
• Construction Tolerance at Poles or Signal Equipment	1.5 inches
• Track Construction and Maintenance Tolerance for Mainline, Ballasted Track	1.5 inches

• Track Construction and Maintenance Tolerance for Embedded or Direct Fixation Track	0.5 inches
• Track Construction and Maintenance Tolerance for Secondary and Yard Tracks	1 inch
• Allowance for Acoustical Treatment, Where Required	3 inches
• Chorded Wall (CW) construction factor, additional width for chorded Construction Walls to be added on the Outside of Curves Only	See Figures 2-5 and 2-6

2.3.2.3 Running Clearances

In addition to the Vehicle Dynamic Envelope and Other Wayside Factors, the Track Clearance Envelope includes an allowance for Running Clearance (RC) to provide clear passage for a LRV, which has moved to the extreme position within the Vehicle Dynamic Envelope.

The following define the minimum running clearances to be included in the horizontal component of the Track Clearance Envelope.

Running Clearances (RC)	Distance
• Running Clearance at Overhead Contact System (OCS) Poles, Signals, Signs, and Other Non-Structural Members	2 inches
• Running Clearance Along Structural Members	6 inches
• Running Clearance for Adjacent Light Rail Vehicles	6 inches

2.3.3 Special Clearance Situations

In addition to the Track Clearance Envelope requirements described above, there are several special clearance situations warranting further definition. These special situations include the vehicle interface at station platforms; retaining walls in both cut and fill sections, through girder bridges, and maintenance and emergency evacuation paths.

- All structures installed above the top of nearest rail must be set either at, or beyond, the Track Clearance Envelope outline shown in Figure 2-4 .

2.3.3.1 Vehicle Interface at Station Platforms

At passenger stations, the distance from the centerline of the track to the edge of platform shall be based on the vehicle threshold, a set gap and with a tolerance of +0.00 inch and – 0.125 inch. The nominal horizontal gap shown between the platform edge and the edge of vehicle floor is in accordance with ADA requirements. Station clearance requirements are shown in Figures 2-7 and 2-8.

2.3.3.2 Retaining Walls

Cut Sections

In those cases where a retaining wall along the LRT System is in a cut section, the preferred minimum clearance from the centerline of track to the near face of a retaining wall shall be a minimum of 9 feet. Where no maintenance and emergency evacuation path is required adjacent to the retaining wall, the absolute minimum clearance from the centerline of track to the near face of a retaining wall shall be no less than that required to clear the Track Clearance Envelope. See Figure 2-9 for a typical cut section.

Fill Sections

In retained fill sections, the top of a retaining wall shall be 1 foot above the elevation of the top of the adjacent rail (the rail nearest to the wall), and the preferred minimum distance from the centerline of track to the face of the wall shall be a minimum of 9 feet. Where no maintenance and emergency evacuation path is required adjacent to a curb or retaining wall without a fence or railing, the absolute minimum clearance from the centerline of track to the near face of the curb or wall shall be no less than 9' feet. See Figure 2-9 for typical fill sections.

2.3.3.3 Maintenance and Emergency Evacuation Paths

A minimum clear path width of 30 inches (48 inches desirable) shall be provided between the Track Clearance Envelope and any continuous obstruction alongside the track in a designated passenger emergency evacuation area. A minimum clear distance of 24 inches shall be provided between the Track Clearance Envelope and any continuous obstruction along a path, which is used by maintenance employees in the performance of their duties.

2.3.4 Track Clearance Envelope (Vertical)

Since the LRT system will draw electric traction power from an overhead contact wire system (OCS), the following vertical clearances from the top of the high rail along any given section of track to the soffit of any overhead structure, within the horizontal limits of the Track Clearance Envelope, shall be provided:

Location	Minimum Vertical Clearance
At Overhead Bridges	18'-0" desirable (NESC)
	16'-0", minimum
	*14'-6", absolute minimum

* (Not to be used without prior METRO approval)

The absolute minimum vertical clearance of 14'-6" is based upon a minimum pantograph operating height of 13 feet.

2.3.4.1 Transit Structures

Transit structures over public highways shall be in accordance with American Association of State Highway and Transportation Official Standard Specifications for Highway Bridges or as modified by the Arizona Department of Transportation or local jurisdiction, whichever is applicable. Vertical clearances for transit structures over local public streets and roads shall be as required by METRO and the local jurisdiction.

Minimum vertical clearance for transit structures over railroad tracks shall be 23 feet 6 inches from top of rail to nearest structure point within the Clearance Envelope of the railway.

2.3.5 Track Spacing

The minimum allowable spacing between two exclusive LRT mainline tracks, with equal superelevation and no OCS support poles between them shall be determined from the following formula:

$$S = T_i + T_o + 2(OWF) + RC$$

T_i = Dynamic half width of Track Clearance Envelope inswing towards curve center, in inches (See Figure 2-4)

T_o = Dynamic half width of Track Clearance Envelope outswing away from curve center, in inches (See Figure 2-4)

OWF = Other wayside factors, in inches

RC = Running clearance, in inches

Along track sections where OCS poles are located between track centerlines, the minimum track spacing shall be determined from the following formula:

$$S = T_i + T_o + 2(OWF + RC) + P$$

Where P = maximum allowable OCS pole diameter (including deflection) of 18 inches

The minimum track spacing to be used along tangent track with center OCS support poles shall be 13 feet 6 inches.

The minimum track spacing to be used along tangent track without center OCS support poles shall be 12 feet 0 inch. (Not to be used without prior METRO approval.)

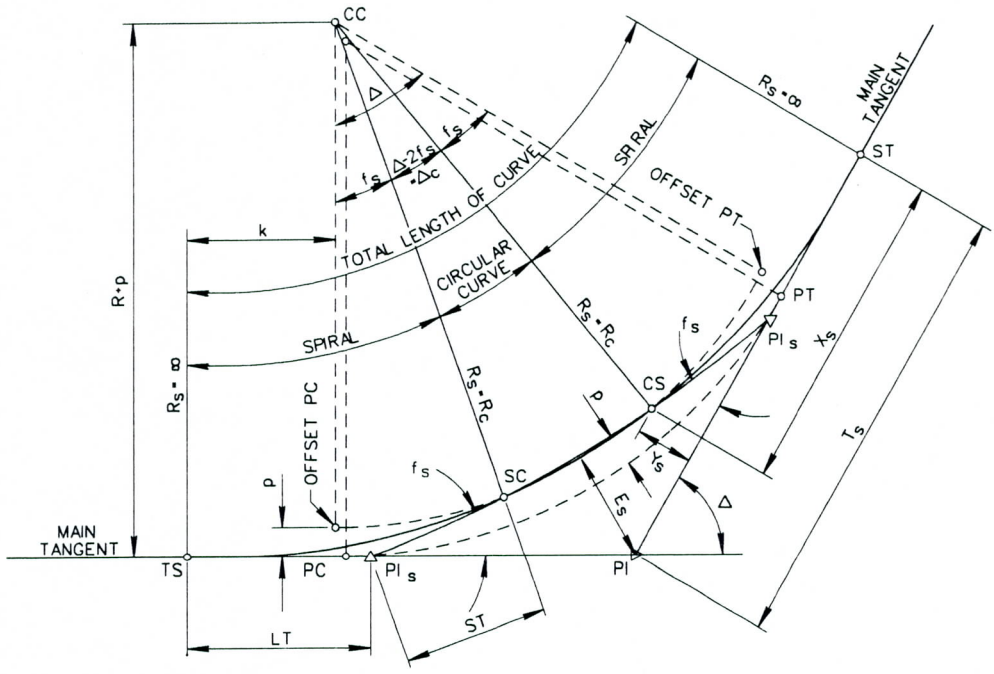

NOTATIONS

CC - CENTER OF CIRCULAR CURVE

CS - POINT OF CHANGE FROM CIRCULAR CURVE TO SPIRAL

D_C - DEGREE OF CIRCULAR CURVE, ARC DEFINITION

E_S - TOTAL EXTERNAL DISTANCE OF A SPIRALIZED CURVE

k - TANGENT DISTANCE FROM TS OR ST TO PC OR PT OF THE SHIFTED CIRCULAR CURVE

L_C - TOTAL LENGTH OF CIRCULAR CURVE ARC

L_S - TOTAL LENGTH OF SPIRAL

L.T. - LONG TANGENT OF SPIRAL

p - OFFSET FROM THE MAIN TANGENT TO THE PC OR PT OF THE SHIFTED CIRCULAR CURVE

PC - POINT OF CHANGE FROM TANGENT TO CIRCULAR CURVE

PI - POINT OF INTERSECTION OF MAIN TANGENTS

PI_S - POINT OF INTERSECTION OF MAIN TANGENT WITH TANGENT THROUGH SC OR CS POINT

PT - POINT OF CHANGE FROM CIRCULAR CURVE TO TANGENT

R - RADIUS OF CIRCULAR CURVE

SC - POINT OF CHANGE FROM SPIRAL TO CIRCULAR CURVE

ST - POINT OF CHANGE FROM SPIRAL TO TANGENT

S.T. - SHORT TANGENT OF SPIRAL

T_S - TOTAL TANGENT DISTANCE FROM TS OR ST TO PI

TS - POINT OF CHANGE FROM TANGENT TO SPIRAL

X_S - TANGENT DISTANCE FROM TS TO SC OR ST TO CS

Y_S - TANGENT OFFSET AT SC OR CS

Δ - TOTAL CENTRAL ANGLE OF SPIRAL AND CIRCULAR CURVES

Δ_C - CENTRAL ANGLE OF THE CIRCULAR CURVE

f_S - CENTRAL ANGLE OF SPIRAL

CURVE FORMULAS

$$D_C = \frac{5729.578}{R}$$

$$T_S = (R+p)\tan\frac{\Delta}{2} + k$$

$$E_S = (R+p)\left(\frac{1}{\cos\frac{\Delta}{2}} - 1\right) + p$$

$$L_C = \frac{\Delta_C}{D_C} \times 100 = \frac{\Delta - 2f_S}{D_C} \times 100$$

SPIRAL FORMULAS
f_S IN RADIANS

$$X_S = L_S\left(1 - \frac{f_S^2}{10} + \frac{f_S^4}{216} - \frac{f_S^6}{9360} \cdots\right)$$

$$Y_S = L_S\left(\frac{f_S}{3} - \frac{f_S^3}{42} + \frac{f_S^5}{1320} - \frac{f_S^7}{75600} \cdots\right)$$

$$k = L_S\left(\frac{1}{2} - \frac{f_S^2}{60} + \frac{f_S^4}{2160} - \frac{f_S^6}{131040} \cdots\right)$$

$$p = L_S\left(\frac{f_S}{12} - \frac{f_S^3}{336} + \frac{f_S^5}{15840} \cdots\right)$$

$$L_S = 2Rf_S$$

$$f_S = \frac{1}{2}\frac{L_S}{R}$$

$$LT = X_S - \frac{Y_S}{\tan f_S}$$

$$ST = \frac{Y_S}{\sin f_S}$$

HORIZONTAL CURVE AND SPIRAL NOMENCLATURE

METRO	VALLEY METRO RAIL, INC.	DESIGN CRITERIA	DATE January, 2007
		HORIZONTAL CURVE AND SPIRAL NOMENCLATURE	FIGURE NO. 2-1

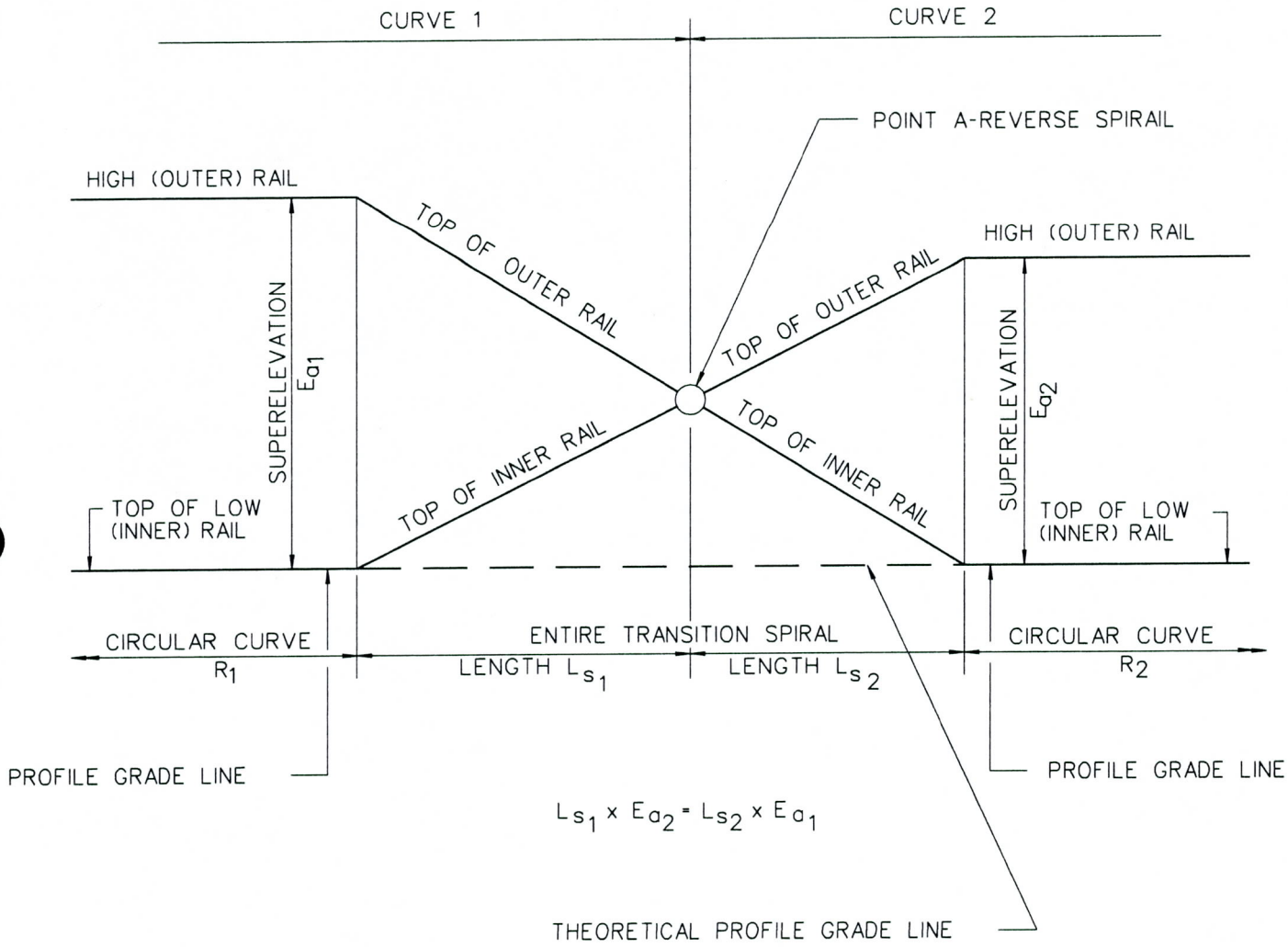

METRO	VALLEY METRO RAIL, INC.	DESIGN CRITERIA	DATE January, 2007 Revised June, 2007
		SUPERELEVATION TRANSITIONS FOR REVERSE SPIRALS	FIGURE NO. 2–2

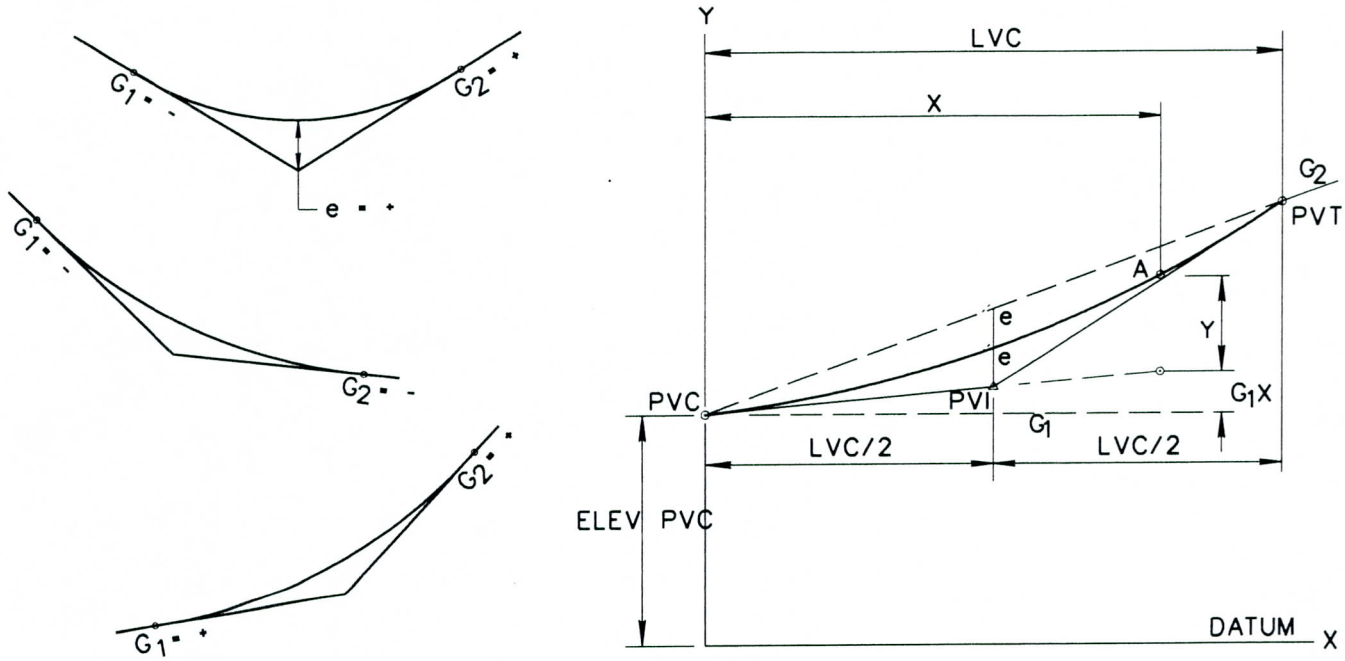

SAG VERTICAL CURVES

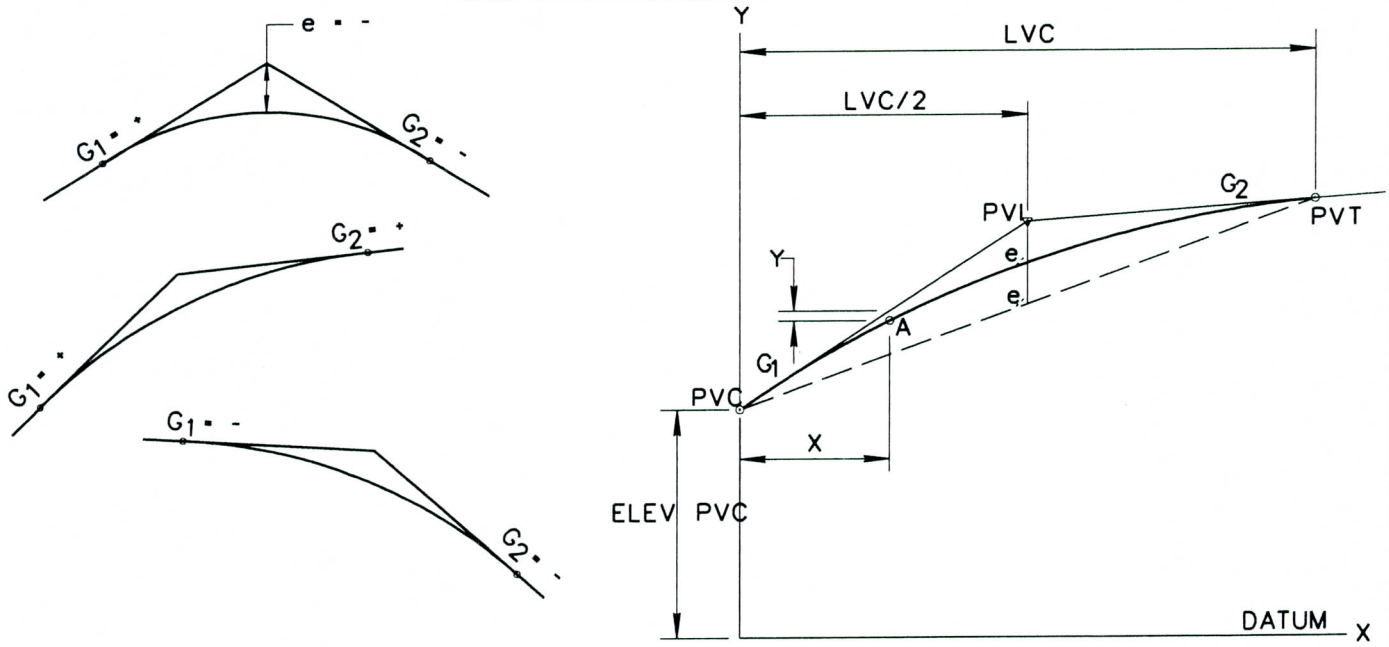

CREST VERTICAL CURVES

PARABOLIC VERTICAL CURVE FORMULAS

$$e = \left(\frac{G_2 - G_1}{8}\right) LVC = \frac{1}{8} A(LVC)$$

$$Y = \frac{1}{2}\left(\frac{G_2 - G_1}{LVC}\right)X^2 = \frac{1}{2} rX^2$$

$$\text{ELEV } A = \left(\frac{r}{2}\right)X^2 \pm G_1X + \text{ELEV PVC}$$

$$r = \left(\frac{G_2 - G_1}{LVC}\right) = \text{RATE OF CHANGE IN GRADE}$$

METRO	VALLEY METRO RAIL, INC.	DESIGN CRITERIA	DATE January, 2007
		STANDARD VERTICAL CURVES	FIGURE NO. 2-3

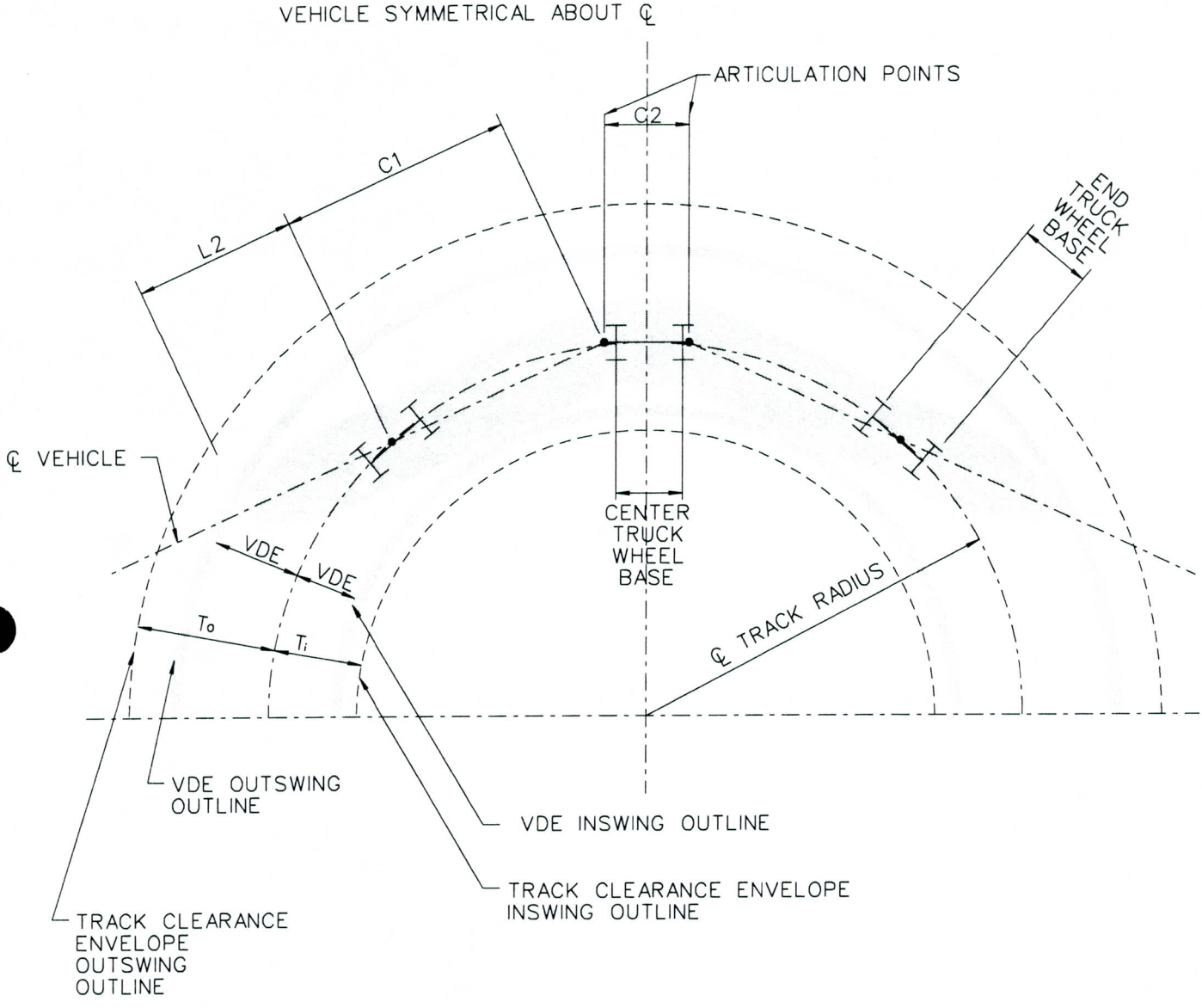

TRACK CLEARANCE ENVELOPE WITH VEHICLE

NOTES:

1. FOR VALUES OF C1,C2,L2 AND VEHICLE DIMENSIONS REFER TO CHAPTER 8 TABLE 8-1 & FIGURE 8-5.
2. FOR FORMULA TO ESTABLISH TRACK CLEARANCE ENVELOPE (T_o AND T_i) REFER TO SECTION 2.3.2

METRO	VALLEY METRO RAIL, INC.	DESIGN CRITERIA	DATE January, 2007 Revised June, 2007
		TRACK CLEARANCE ENVELOPE WITH VEHICLE DYNAMIC ENVELOPE	FIGURE NO. 2-4

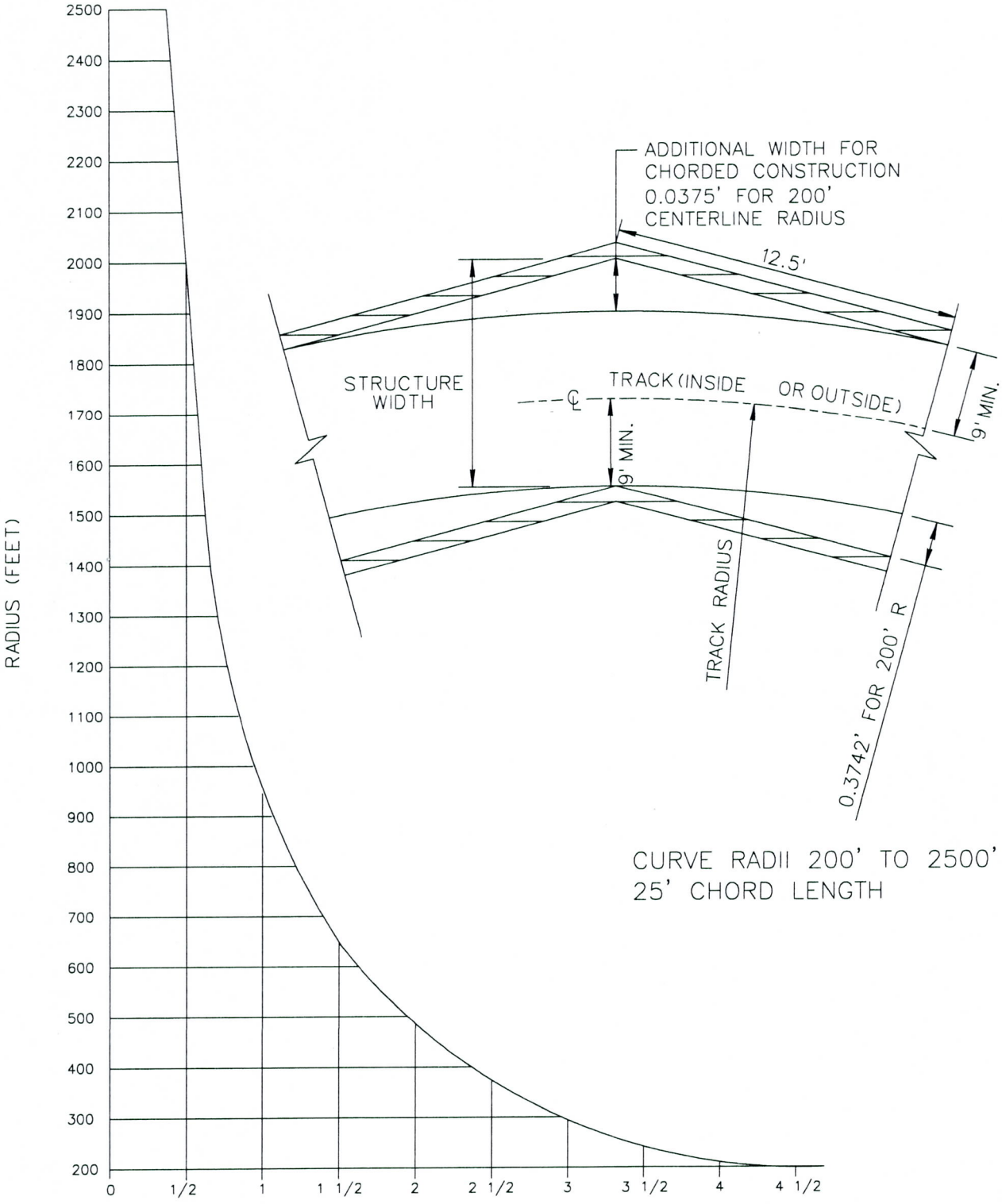

CURVE RADII 200' TO 2500'
25' CHORD LENGTH

METRO	VALLEY METRO RAIL, INC.	DESIGN CRITERIA	DATE January, 2007 Revised June, 2007
		ADDITIONAL WIDTH FOR CHORDED CONSTRUCTION 25' CHORD LENGTH	FIGURE NO. 2-5

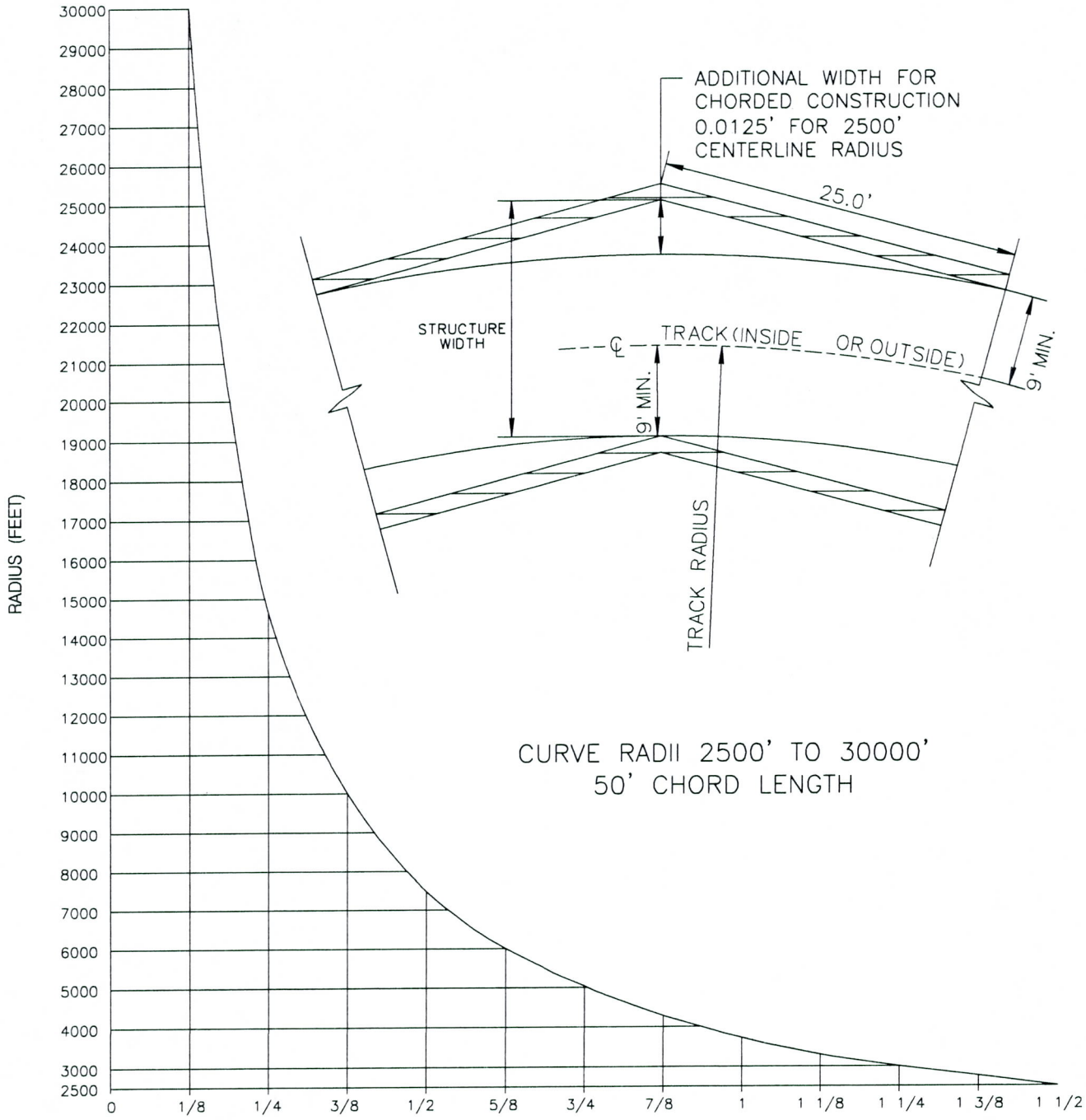

METRO	VALLEY METRO RAIL, INC.	DESIGN CRITERIA	DATE January, 2007 Revised June, 2007
		ADDITIONAL WIDTH FOR CHORDED CONSTRUCTION 50' CHORD LENGTH	FIGURE NO. 2-6

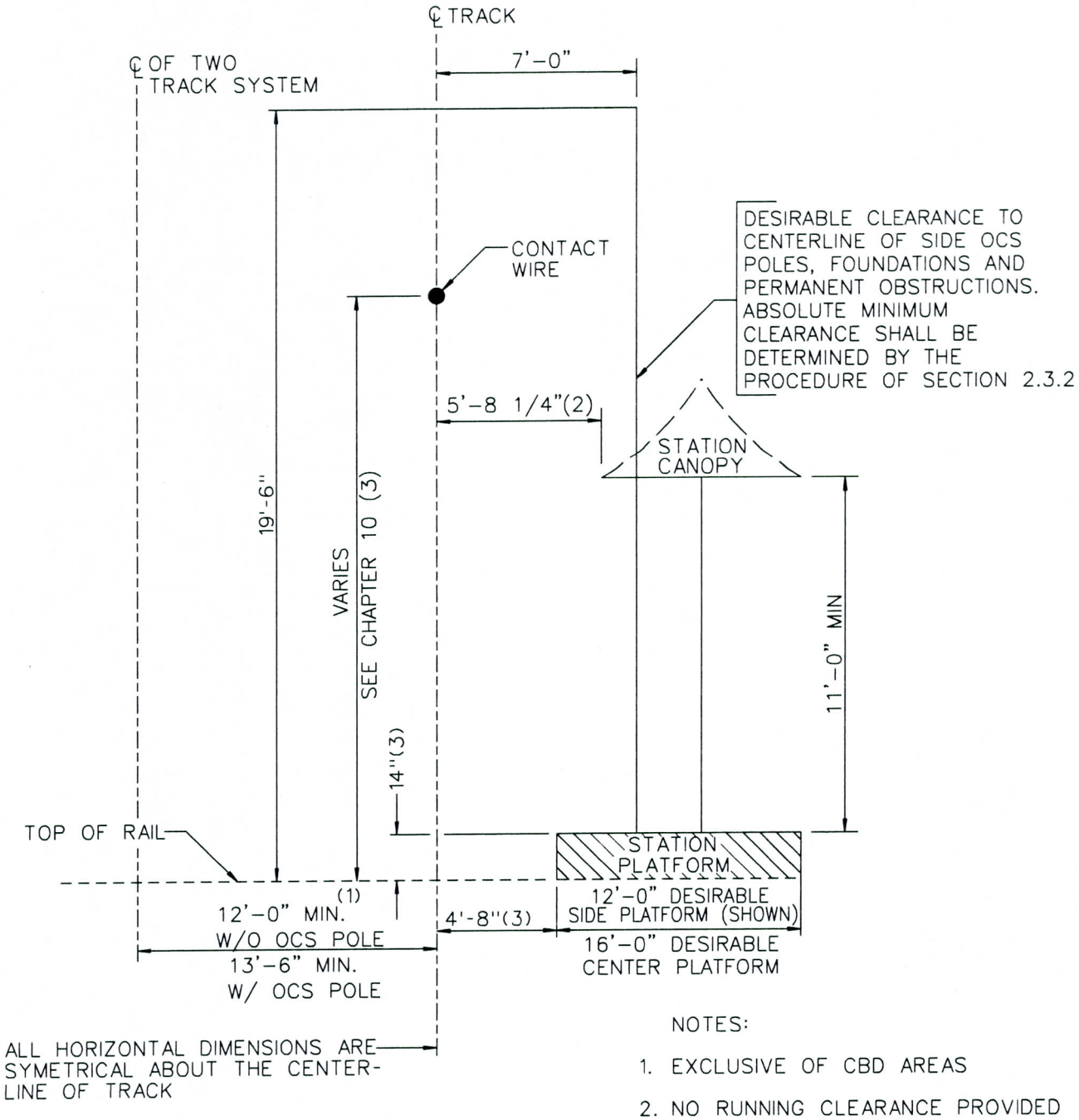

NOTES:

1. EXCLUSIVE OF CBD AREAS
2. NO RUNNING CLEARANCE PROVIDED AT STATION CANOPIES
3. REFER TO FIGURE 2-8

MAINLINE - TANGENT TRACK
NTS

METRO	VALLEY METRO RAIL, INC.	DESIGN CRITERIA	DATE January, 2007 Revised June, 2007
		LIGHT RAIL CLEARANCE DIAGRAM	FIGURE NO. 2-7

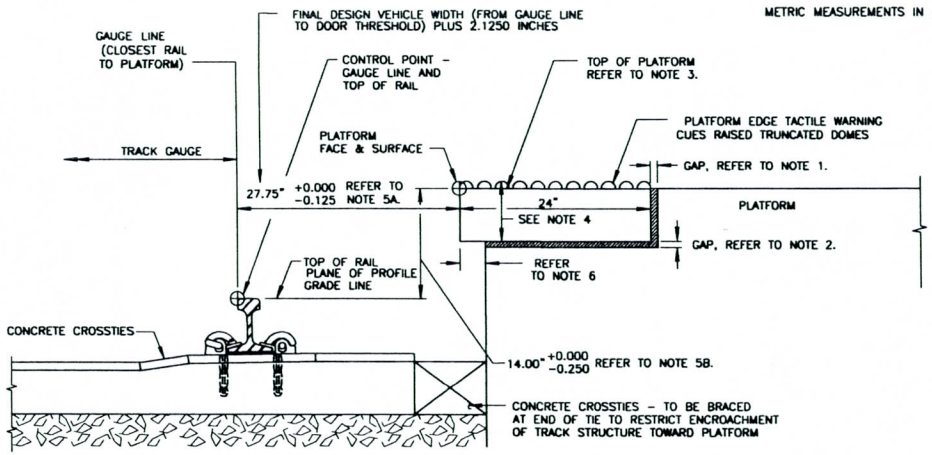

BALLASTED TRACK SECTION AT STATION PLATFORM

SCALE: 1"=2'-0" RAIL TO PLATFORM GUIDELINES

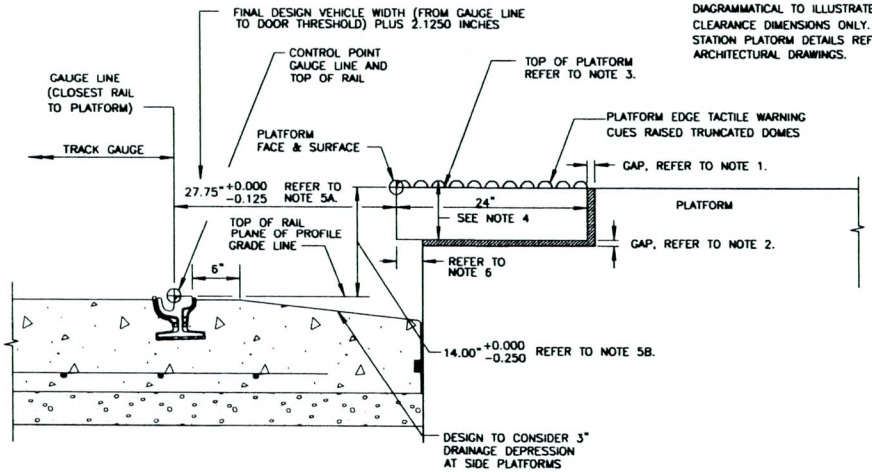

EMBEDDED TRACK SECTION AT STATION PLATFORM

SCALE: 1"=2'-0" RAIL TO PLATFORM GUIDELINES

DESIGN COMMENT:

DETAILS OF STATION PLATFORM ARE DIAGRAMMATICAL TO ILLUSTRATE LOCATION AND CLEARANCE DIMENSIONS ONLY. FOR ACTUAL STATION PLATORM DETAILS REFER TO ARCHITECTURAL DRAWINGS.

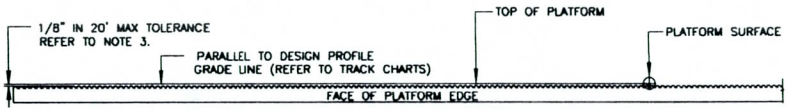

LONGITUDINAL PLATFORM TOLERANCES

SCALE: 1 1/2"=1'-0"

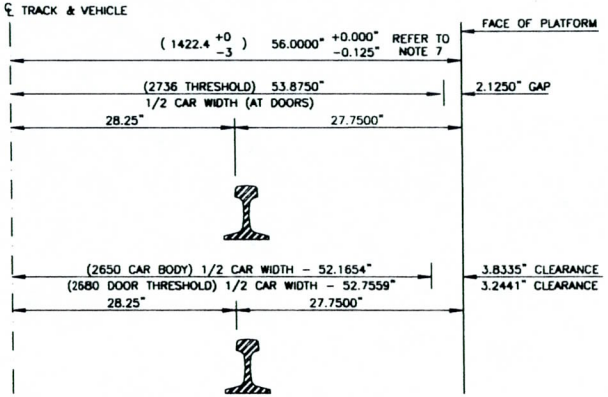

VEHICLE - PLATFORM RELATIONSHIP

SCALE: 1"=2'-0"

NOTES:

1. EDGE PAVERS TO BE INSTALLED AFTER TRACK IS BROUGHT TO ITS FINAL ELEVATION AND ALIGNMENT. CONSTRUCTION GAP MINIMUM DIMENSION SHALL BE OF SUFFICIENT WIDTH TO ALLOW INSTALLATION CONTRACTOR TO ESTABLISH REQUIRED DISTANCE FROM GAUGE LINE TO PLATFORM FACE WITHIN STATED HORIZONTAL TOLERANCE.
2. CONSTRUCTION GAP MINIMUM DIMENSION SHALL BE OF SUFFICIENT HEIGHT TO ALLOW INSTALLATION CONTRACTOR TO ESTABLISH REQUIRED DISTANCE FROM TOP OF RAIL TO PLATFORM SURFACE WITHIN STATED VERTICAL TOLERANCE.
3. FOR THE ENTIRE LONGITUDINAL LENGTH OF PLATFORM, THE SURFACE DEVIATION SHALL HAVE A TOLERANCE OF 1/8 INCH IN 20 FEET AND MUST BE CONSTRUCTED WITHIN THE STATED CRITICAL VERTICAL (TOP OF RAIL TO PLATFORM SURFACE) TOLERATED LIMITS.
4. DIMENSION TO BE DETERMINED BY CONTRACTOR TO MEET REQUIREMENTS FOR RAISED TRUNCATED DOMES.

5A. THE GAUGE LINE ALIGNMENT OF THE CLOSEST RAIL TO THE PLATFORM SHALL MAINTAIN A SPECIFIC HORIZONTAL RELATIONSHIP TO THE PLATFORM FACE WITHIN THE STATED HORIZONTAL CLEARANCE THROUGHOUT THE LENGTH OF THE STATION PLATFORM.

5B. THE TOP OF RAIL ALIGNMENT SHALL MAINTAIN A SPECIFIC VERTICAL RELATIONSHIP TO THE PLATFORM SURFACE WITHIN THE STATED VERTICAL CLEARANCE THROUGHOUT THE LENGTH OF THE STATION PLATFORM.

6. PLATFORM EDGE OVERHANG SHALL BE OF SUFFICIENT LENGTH TO ALLOW INSTALLATION CONTRACTOR TO MEET THE REQUIREMENTS OF NOTE 1 AND A PLATFORM VEHICLE CLEARANCE, AT DOORS, OF 2.1250 INCHES WITH VEHICLE IN NORMAL STATIC POSITION.
7. CENTERLINE OF TRACK TO FACE OF PLATFORM DIMENSION (56 INCHES) IS SUBJECT TO CHANGE AT SPECIAL CURVED TRACK STATION LOCATIONS TO SUIT CLEARANCE CONDITIONS. HOWEVER, A.D.A GAP OF 3 INCHES MAXIMUM MUST BE HELD.

METRO

VALLEY METRO RAIL, INC.

DESIGN CRITERIA

DATE January, 2007 Revised June, 2007

BALLASTED AND EMBEDDED TRACK AT STATION PLATFORM

FIGURE NO. 2-8

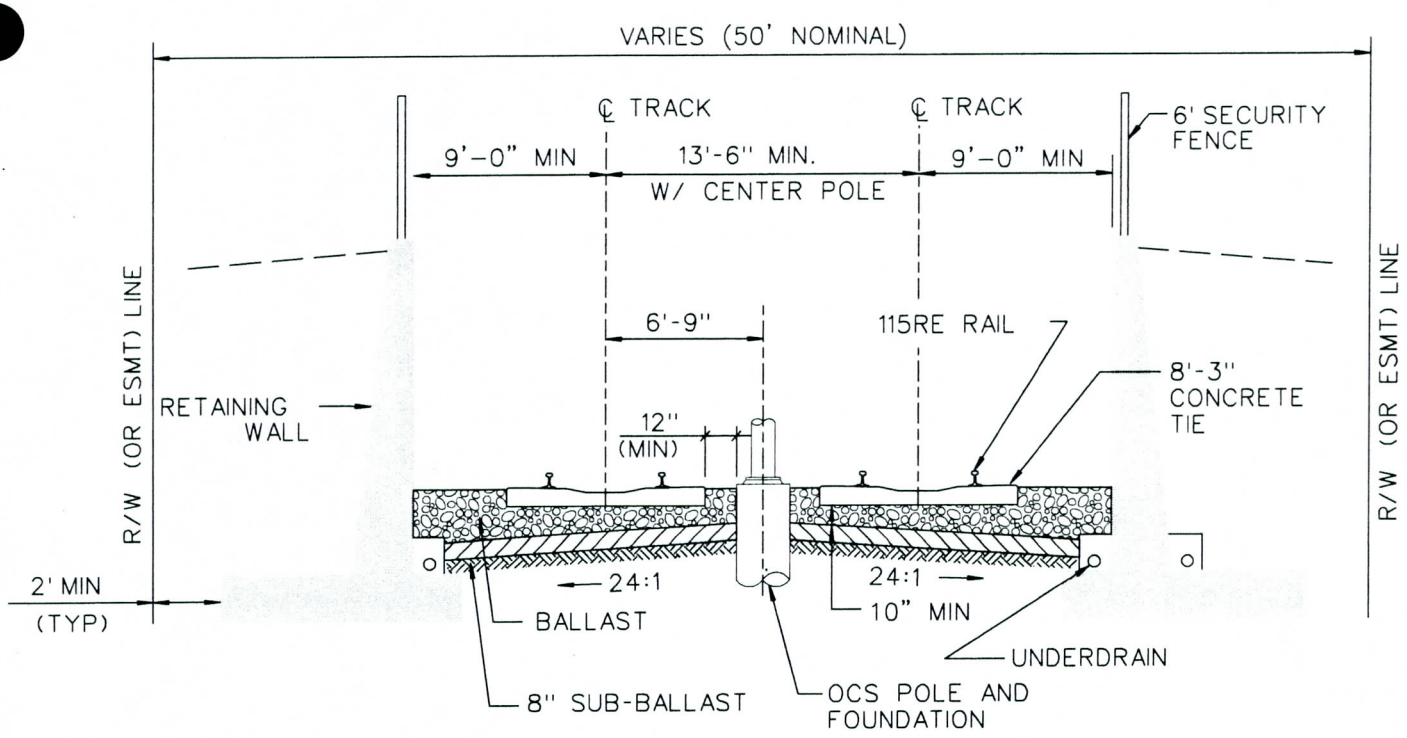

TYPICAL RETAINED CUT

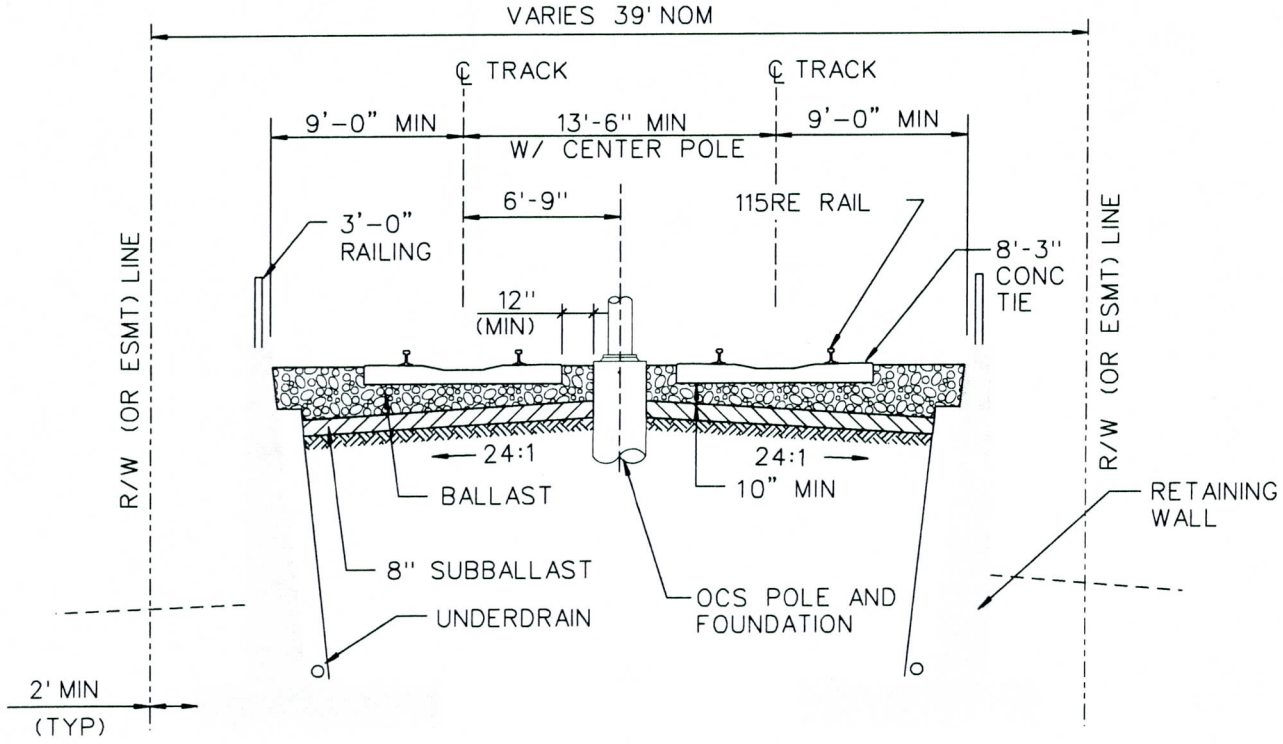

TYPICAL RETAINED FILL

METRO	VALLEY METRO RAIL, INC.	DESIGN CRITERIA	DATE January, 2007 Revised June, 2007
		TYPICAL RETAINED CUT AND RETAINED FILL	FIGURE NO. 2–9

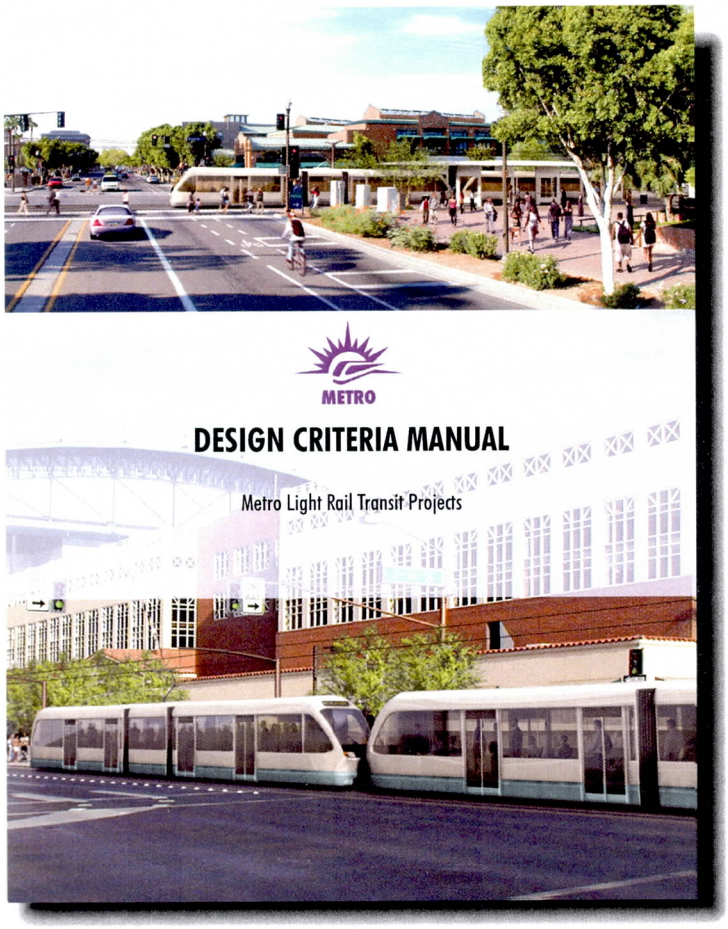

Chapter 3.0

Civil Work

3.0 CIVIL WORK

The purpose of this chapter is to establish the standards and design policies for the civil engineering design to be used in the preliminary engineering and final design of the METRO LRT project.

It includes criteria for the design of light rail transit system surveys, utilities, drainage, roadways, paving, and determination of the required rights-of-way and various easement types.

3.1 Survey Control

A permanent horizontal and vertical survey control system (benchmark description) shall be developed during the Final Design phase of the project. Control points shall be permanently marked, clearly described and shall be placed a maximum of 1000 LF intervals along the survey corridor. A control diagram and report shall be prepared and provided to all parties involved in the completion of the project.

Design Engineer and Land Surveyor shall meet with the local jurisdiction prior to beginning survey work to discuss local concerns and ties to the jurisdiction horizontal and vertical control.

3.1.1 Horizontal Control

The horizontal control for the project shall be based on control surveys provided for the Maricopa County GDACS system. All control work shall be tied back to established and recognized NGS monuments for verification of accuracy.

The accuracy of the horizontal ground control and of supporting horizontal ground control surveys shall as a minimum be Second Order, Class I, as defined by the Federal Geodetic Control Committee and published under the title Classification, Standards of Accuracy and General Specifications of Geodetic Control Stations, published by the National Geodetic Survey (NGS) in February 1974.

Existing survey monuments which lie within the LRT way shall be replaced as described and shown on Figure No. 3-1 and 3-2.

3.1.2 Vertical Control

Vertical control for the project shall be based on the National Geodetic Vertical Datum (NGVD) of 1988.

The accuracy of the vertical ground control and of supporting vertical ground control surveys shall be, as minimum, Second Order, Class 1, as defined in the preceding section.

3.1.3 Survey Control – Right-of-Way

A record of survey is required to establish and identify the existing right-of-way condition prior to any new right-of-way requirements being determined. Right-of-way surveys is the composite total requirement of all interests and uses of real property needed to construct, maintain, protect and operate the transit system. Some right-of-way survey requirements are temporary and reversionary in nature, while other requirements are permanent as dictated by operating needs. The intent is to acquire and maintain the minimum right-of-way required consistent with the requirements of the system and good right-of-way practices. Because right-of-way plans are

METRO

used as a basis for acquisition of property, all interests and uses shall be shown on the right-of-way plans together with the detailed property dispositions. A physical survey is to be performed at the site and is to be provided for every parcel of land affected by a right-of-way acquisition identifying the right-of-way to be acquired and the remainder of the parcel. The right-of-way to be acquired is to be marked (painted or staked) on the property in a manner that will clearly identify the right-of-way being acquired and any improvements lying within said right-of-way being acquired. A title report is required for all property to be acquired by METRO.

The taking envelope is influenced by the topography, drainage, ditches, retaining walls, service roads, utilities, and the nature of the structure and side slope selected.

3.1.4 Design Surveys

The survey must be supervised by a professional Land Surveyor registered in the state of Arizona. This section contains general survey requirements and standards. More specific survey requirements may be found under general/survey information for each local jurisdiction in which the METRO LRT project is located.

Benchmarks, either permanent or temporary, shall be a maximum of 1,000 feet apart. At least two benchmarks on a project shall be existing local jurisdiction recognized benchmark monuments. The Land Surveyor shall check the location of all found benchmarks and monuments with known local jurisdiction data.

Existing monuments shall be located by the Design Engineer and Land Surveyor, especially if they are covered by pavement or a seal coat, and their location confirmed in order to determine the available ROW for the proposed improvements.

The Design Engineer shall check the design detail requirements for each type of project to make sure the survey contains all necessary information. The following is a list of general requirements for the survey:

- The survey shall show finished floor elevations of all structures within the ROW and 30 feet beyond unless exempted in the detail design section.
- All distances in the survey notes shall be from the face of the object being measured to the monument line.
- Show all subdivision names, block numbers, lot numbers, property splits, lot dimensions, addresses, names of major businesses, schools, fire stations, and other public facilities within the project boundaries.
- All above ground utilities and appurtenances and their distance from the monument line shall be located.
- All topography to at least 10 feet beyond the ultimate ROW shall be located.
- Detailed cross sections shall be taken at a minimum of 50-foot intervals and Design Engineer shall consider developing a digital terrain model (DTM) for the project.

- All subdivision entrance structures and any associated lighting and power connections shall be located.
- In the absence of record drawings, sufficient elevations shall be obtained to indicate the direction of surface flow on all intersecting streets, frontage roads, and paved parking lots. Show the direction of flow using small arrows in the plan view on every plan sheet.
- Where certain items such as monuments, water valves, etc., are supposed to be according to plan records, but cannot be found in the field, they shall be labeled "**NOT FOUND**" or "**NF**" on the plans.
- Locate all existing irrigation lines and appurtences within all agencies ROW (eg, COP, COT, COM, COG, ADOT, etc.).
- Each plan sheet shall refer to the nearest benchmark by name and stationing.
- All driveways and alleys shall be located and profiled. Driveways may be profiled using a smart level for ADA retrofit projects in which all driveways identified as over 2% slope shall be profiled.
- All water valve boxes shall be located and the elevations of the top of the operating valve nuts shall be determined. This data will be shown in the profile section of the plans using the symbol for water valves.
- The elevations of all existing sewer and storm drain manhole rims and inverts shall be shown on the plan views or in the profiles.

3.1.5 Guideway

Guideway is defined as that portion of the light rail line, which has been prepared to support the track and its appurtenant structures (See Chapter 4 Trackwork for other criteria.)

This section establishes criteria for the preliminary and final design of at-grade sections of the light rail system guideway and provides guidelines for determining right-of-way requirements for line sections of the system.

The guideway shall be designed in conformance with these criteria and the current standards of the American Railway Engineering and Maintenance-of- Way Association (AREMA) Manual for Railway Engineering and the appropriate standards, modified as required to reflect the physical requirements and the operating characteristics of the light rail system. The guideway may contain longitudinal and transverse duct banks, electrical conduits, and utility structures.

3.1.6 Transition Slabs

A transition slab shall be provided at all transitions between ballasted track, direct fixation, or embedded track.

3.2 Utilities

This criterion establishes the policies, procedures, and guidelines relating to utilities within the METRO LRT project and are incorporated herein (see Figures 3-3, 3-4 and 3-5).

General Compliance with the utility design and coordination procedures contained herein is required unless otherwise agreed to by METRO.

Coordination with Governmental Agencies and Utility Companies shall be the responsibility of METRO.

3.2.1 Utility Location and Relocation Requirements

It is the paramount for METRO to maintain a safe and continuous operation of the guideway. Access for construction or maintenance purposes to the guideway shall be restricted to LRT personnel only or to others under the direction of authorized LRT personnel.

The Restricted Utility Area (RUA) is defined as the area where restrictions apply to existing and new utilities in the vicinity of the METRO facility to protect both the utility and the guideway. All utilities not part of the LRT system shall be maintained from outside of the RUA.

The City of Phoenix has supplemented the requirements for construction of water and sewer utilities in the vicinity of the METRO facility. The City of Phoenix is responsible for payment for these additional improvements.

3.2.2 METRO RUA Requirements

The METRO RUA requirements apply to all utilities in the vicinity of the track. The METRO RUA is defined horizontally as follows: (See Figures 3-3, 3-4 and 3-5)

- Double Track – 10 feet left and right of the centerline of tracks; width is 33.5 feet;
- Single Track – 10 feet left and right of the centerline of track; width is 20 feet;
- Center Station Platform – 10 feet left and right of the centerline of tracks; width is 47 feet; and
- Curb Side Station Platform – 10 feet left or right of centerline of track on rail side and 20 feet from centerline of track on platform side; width is 30 feet.

The METRO RUA is defined vertically as follows:

- The top of existing utilities within the RUA shall be a minimum of 4 feet below top of rail; and
- The top of new utilities crossing the RUA shall be a minimum of 5.5 feet below top of rail.

METRO

Utilities within the METRO RUA are restricted as follows:

- Existing Longitudinally Oriented Utilities: Utilities are not generally permitted within the RUA. However utilities will be addressed on a case-by-case basis. Subject to the approval of METRO, a minimum vertical distance of 4 feet from the top of rail to top of utility (or encasement) is provided and evidence that the material, type, condition and load capacity of the utility is sufficient, the utility shall be considered to remain in place. Encasement of the existing utility may be required. In all cases, access for maintenance, inspection, new services or other purposes to the longitudinal utility by way of manholes, vaults, valve boxes, clean outs, taps, etc., shall be made from outside the guideway.

  Longitudinally oriented utilities located within the RUA shall be relocated to outside the RUA, unless approved by METRO to remain. Design for relocated utilities shall be in accordance with applicable METRO, City and State criteria.

- Existing Utility Crossings: Existing utilities that cross the guideway may remain if the vertical distance from the top of rail to the top of the utility (or encasement) is not less than 4 feet, material type, condition and load capacity meets LRT requirements and the distance from the centerline of a OCS support pole foundation to the face of the utility or encasement is not less than 4 feet. Access to the utility by way of manholes, etc. shall be from outside the guideway.

  Existing utilities crossing the track within the RUA shall be relocated (lowered) to provide a minimum vertical distance from top of rail to top of encasement of 5.5 feet extending to the outside of the RUA. Design for relocated utilities shall be in accordance with applicable METRO, City and State criteria.

- New Longitudinally Oriented Utilities: New utilities that are essentially longitudinally oriented with the track alignment shall be constructed outside of the guideway. Access to the utility shall be from outside the guideway. Design for new utilities shall be in accordance with applicable METRO, City and State criteria.

- New Utility Crossings: New utilities that cross the guideway shall be encased in a casing pipe (sleeve) or approved encasement, provide a minimum vertical distance from top of rail to top of encasement of 5.5 feet extending to the outsides of the guideway, and be approved by METRO. Access (i.e. manhole) shall be from outside the guideway. Design for new utilities shall be in accordance with applicable METRO, City and State criteria.

Additional water and sewer design requirements relative to the METRO facility include:

- Fire hydrants shall be added to meet City standards as required by the City and the Fire Marshall. The Fire Marshall may require fire hydrants on both sides of the track.

- Odor control will be required for all sanitary sewer tie-ins and by-pass pumping during construction as indicated in the METRO specifications.

- Facilities with critical service shall be identified, and methodology to maintain service during construction shall be included with the design.

- Permits shall be obtained from Maricopa County Department of Environmental Services for construction of water and sewer utilities.

- Cathodic protection shall be provided for all metallic piping as required by the City and utility company.
- Water and sewer services provided by METRO for existing services only. No allowances made for future service connections.

On a case-by-case basis under certain circumstances, METRO may allow deviations from the RUA Requirements. The Consultant/private utility shall prepare a Request for Revision/Deviation to the Design Criteria Manual for submittal to METRO for approval outlining why the deviation is required. (See Appendix B). The Consultant/private utility shall not proceed with the design until approval is received from METRO for the deviation.

3.2.3 City of Phoenix RUA Requirements (Water and Sewer)

The RUA criteria within the City of Phoenix is presented in the City of Phoenix Light Rail Addendum to the City of Phoenix Design Standards Manual for Water and Wastewater Systems and is summarized below. (See Figure 3-6) The cost difference between the METRO RUA criteria and the City of Phoenix RUA criteria is borne by the City of Phoenix.

- The RUA extends 16 feet left and right of the centerline of the track.
- The top of sleeve for existing and new utilities within the RUA shall be a minimum of 6 feet below top of rail.
- All existing water and sewer utilities shall be relocated out of the RUA.
- All water and sewer crossings shall be sleeved through the RUA.
- All relocations shall be new material.

Other specific requirements for the City of Phoenix water and sewer lines relative to the METRO are as follows:

Water

- A valve shall be provided on each side of the RUA for water crossings, either with new or existing valves outside of the RUA.
- Water service pipe shall be continuous from main to meter, including through the casing. (See Figure 3-7)

Sewer

- Sewer pipes crossing the track shall be ceramic lined ductile iron pipe, for mains and services, unless specified otherwise in the City of Phoenix Light Rail Addendum.
- Manholes shall be located on each side of sewer main guideway crossings.
- Flexible adaptor couplings and a minimum of two short lengths of sewer service pipe are required outside of the sewer crossing casing at the connection to the existing service piping per City of Phoenix supplemental specifications. (See Figure 3-8)

Sleeves

- Casing pipe for mains shall be steel or high density polyethylene (HDPE), minimum 6-inches larger than largest outside diameter, with the exception of water service pipe sleeves which shall be minimum 4-inch diameter for 1-inch services and 6-inch diameter for 1¼ to 2-inch diameter. (See Figure 3-9)
- Steel casing shall be coated ASTM A36 steel, with corrosion protection
- HDPE shall be ADS Systems N12 or equal.
- Controlled low strength material (CLSM) backfiill shall be used to minimum 1-foot above the sleeve for HDPE sleeves.
- All pipe shall be continuous and restrained through sleeves
- End seals and spacers to be provided per City of Phoenix Light Rail Addendum.

On a case-by-case basis under certain circumstances, the City of Phoenix may allow deviations from their RUA Requirements. The consultant shall prepare a Request for Deviation for submittal to the City of Phoenix for approval outlining why the deviation is required. (See Appendix B) The Consultant shall not proceed with the design until approval is received from the City of Phoenix for the deviation.

3.2.4 Definitions

Design Engineer	Private or Municipal Engineer
METRO	Valley METRO Rail, Inc.
Municipal Utilities	Federal Government, County, Indian Community, and Municipality utility services, such as water, sewer, gas (Mesa), city communications and storm drainage.
Prior Rights	A compensable property interest that will justify reimbursement of utility relocation costs. Most common form of prior right is an easement/public utility easement. With utility relocation, prior rights typically transfer to the new location.
Private Utility Companies	Companies such as Arizona Public Service, Qwest Communications, Southwest Gas, Salt River Project, Cox Communications, various fiber optic companies and others.
Utility Abandonment	A utility segment that ceases to be active.
Utility Betterment	Upgrading in size, capacity or quality of a utility segment rather than replacement in kind.
Future Utilities	Addition of a new utility segment not previously in existence. Provision of tunnels, conduits, sleeves, pipe sections, bridge blocks-outs, etc. for future utility use.
Utility Relocation	Required relocation of utility segment due to Light Rail construction.

Utility Segment	Any portion of a utility line, pipe, box, pole, or other, as it relates to the proposed Light Rail project.

3.2.5 Utility Design Reference

Government and private utility relocations and adjustment work shall be performed in accordance with the following references:

- Arizona Utility Coordinating Committee Public Improvement Project Guide
- City of Phoenix Design Criteria for utilities within ROW (AP5.1)
  http://www.ci.phoenix.az.us/AGENCY/phxutper/documents.html
- Arizona Administration Code, Title 18, Chapter 4, Water
  www.azsos.gov/public_services/Title_18/18-04.htm
- Arizona Administration Code, Title 18, Chapter 9, Wastewater
  www.azsos.gov/public_services/Title_18/18-09.htm
- Maricopa Association of Governments (MAG) Uniform Standard Specifications and Details for Public Construction,
  www.mag.maricopa.gov/publications.cms
- City of Phoenix Design Standards Manual for Water and Wastewater Systems
  www. phoenix.gov//WATERSERVICES/standards.html
- Supplement to the MAG Standard Drawings & Standard Specifications,
  www.phoenix.gov//STREETS/magsuppl.html
- City of Mesa Engineering Design Standards and Supplement to the MAG Standard Drawings & Standard Specifications,
  www.cityofmesa.org/engineering/default.asp
- City of Tempe Engineering Design Criteria and Supplement to the MAG Standard Drawings & Standard Specifications,
  www.tempe.gov/engineering/
- City of Glendale Design Standards and Standard Details,
  www.glendaleaz.com/Engineering/formsandpublications.cfm
- Salt River Project (SRP) Right of Way Guidelines, Utility Crossing or parallel to SRP Pipe Standards and Design Guidelines and Specifications for Bridge Crossings of SRP Canals,
  www.srpnet.com/water/services/WE/default.aspx

3.2.6 Utility Base Maps

METRO shall collect existing utility data from various Municipal Utilities and Private Utility companies. METRO shall contact the County and/or municipality wherein the project is located, to assure that all recent utility installations have been accounted for and request plans for "as built" utilities, not furnished, which METRO knows to exist or has reason to believe may exist, based upon METRO's review of plans furnished, permit information and findings in the field. When "as built" data is unavailable, field location shall be required. METRO shall provide the utility mapping to the Design Engineer.

The Design Engineer shall prepare Base Maps of existing utilities based on the information provided by METRO. The Design Engineer shall request and obtain supplemental information from the Municipal Utility and Private Utility companies as required to complete the Base Maps. The Design Engineer shall submit prints of the Base Maps to Municipal and Private Utilities for their review and verifications. Utilities will be requested to return their comments with two sets of "as built" plans for any of their facilities which have not been shown on the maps. Copies of corrected Base Maps shall be furnished to those utilities, which have requested changes or provided additional data. Existing facilities data shall be used for background information on appropriate drawing of the construction documents. A composite plan of existing utilities shall be incorporated into engineering design drawings.

3.2.7 Municipal Utilities

Municipal Utilities may request that METRO provide for relocation of existing water, sewer, storm drainage, natural gas (City of Mesa) and traffic signal conduits, subject to their review. The Design Engineer shall prepare conceptual relocation plans for review by the Municipal Utility prior to preparation of draft utility plans. The conceptual plans shall be submitted to METRO for coordination with the Municipal Utility.

Alternatively, some Municipal Utilities may desire to design, or design and construct, some or all abandonment's and relocations with their own forces.

Municipal Utilities may have betterments or allowances for future needs constructed under the light rail construction contract, subject to approval by METRO. Unless there is a specific agreement between METRO and the Municipal Utility, additional costs associated with design and construction of betterments and allowance for future needs will be paid for by the Municipal Utility.

When Municipal Utility betterments or allowances for future needs are to be constructed by the METRO contractor, the Design Engineer shall be required to prepare plans for this work in accordance with requirements of that Municipal's standards. METRO shall be required to provide for work within the Special Provisions and in the Sequence of Construction shown on the project drawings.

The LRT project may have to relocate any government utilities that do not belong to the local jurisdiction, i.e. University facilities, Arizona Department of Transportation, U.S. Government, etc.

3.2.8 Private Utilities

METRO, in coordination with the Design Engineer and the Private Utilities, shall be responsible for identification of suitable relocation alignments for private utilities existing within the Public right-of-way. The locations shall be in conformance with Light Rail Design Guidelines and Municipal Policy on accommodating utilities within the right-of-way. Deviations from METRO criteria will be evaluated on a case by case basis as described in Section 3.2.2 of this manual.

Private Utilities design their own relocations, which are subject to review and approval by METRO for satisfactory compliance with policies, procedures, and guidelines contained herein. Generally, Private Utilities do their own relocation construction, but on occasion, may request METRO to have their contractor do all or part of the utility relocation work, in order to avoid construction conflicts and delays.

Private Utilities relocation designs shall be forwarded by METRO to the Design Engineer for review relative to relocated public utilities, proposed roadwork and guideway. The Design Engineer will work with METRO and the private utility to assess options in areas of conflict.

Private Utilities may request METRO to have bridge blocks-outs or modification of other elements of the project to accommodate their facility relocations. When approved by METRO, the Design Engineer shall perform the design and maintain actual extra cost records for preparation of a Consultant Change Order for METRO reimbursement through a Utility Agreement.

When Utility Companies prepare drawings for work to be performed concurrently with project construction, METRO shall provide for work within the Special Provisions and in the Sequence of Construction shown in the project drawings. Utilities shall be required to provide appropriate size reproducible drawings and/or CADD files with a sheet number block located in the upper right corner of each drawing for the Utility consultant to number sheets within the project construction drawings. The drawings shall be suitable for reduction to half size.

Private Utility Companies shall submit their plans to the appropriate municipal agency for approval and permit of all work to be completed in the public right-of-way. City of Phoenix submittals shall be in accordance with City of Phoenix Administrative Procedure 5.1

When Private Utility Companies have submitted plans and request to construct their facilities within Public right-of-way, their plans shall be reviewed and approved by METRO for construction prior to advertisement. The private utility companies shall indicate locations of facilities with horizontal and vertical datum on the project construction drawings. A note shall appear on the drawings, flagged to the facility as follows: "Proposed for construction prior to _____". Date of proposed bid advertisement shall be inserted in blank.

Copies of the final approved Private Utility relocation drawings will be provided to the Design Engineer for inclusion on the Public Utility drawings.

3.2.9 Utility Service Requests

METRO is required to prepare power service requests for all electrical facilities including traffic signals, signs, roadway, lighting, water irrigation, sewage and storm water. If locations of power service availability are required, METRO shall request information from the appropriate power utility.

3.2.10 Salt River Project (SRP) Water License Requirements

An SRP License is required when any of the following situations exist. In addition, SRP have specific design requirements for utility crossings or lines parallel to SRP pipe. (See Figures 3-10 and 3-11) SRP relocations are designed by SRP as described in Section 3.2.8 Private Utilities.

- Any part of an SRP Water facility is installed by forces other than SRP.

- Placement of utility and/or excavating under a SRP Water facility.
- Placement of utility and/or excavating within eight (8) feet of the centerline of an SRP Water ditch, pipeline or structure.
- Crossings over SRP canals or laterals include bridges, concrete box culverts, pipes, etc.
- Excavating that may negatively impact a Salt River Valley Water Users Association's facility regardless of the distance from the facility or performing any other type of work that in the opinion of the Design Engineer may negatively impact the facility.

The Design Engineer shall advise METRO when a license will be required under the above conditions prior to 60 percent submittal. The Design Engineer shall make the request in accordance with "SRP - Water License Procedure".

3.2.11 Utility Coordination Meetings

Periodic meetings, with all utilities present, may be requested by Utility Owners to exchange information and resolve potential conflicts with the Design Engineer.

3.3 Drainage

The goal in the design of the system drainage is to protect the rail system line and facilities from all weather conditions (i.e. storm-runoff damage, etc.), and to protect METRO from liability for damage to property from resulting storm-runoff either passing through or caused by Light Rail construction, while maintaining consistency with the requirements of the Clean Water Act.

Design of drainage facilities located within the jurisdiction of other agencies requiring relocation or modifications because of LRT construction shall conform to the latest design criteria standards (i.e. design criteria manual) of METRO and the various municipalities as referenced below[1]:

- City of Glendale – 2002 Engineering and Construction Standards
  http://www.glendaleaz.com/engineering/documents/2002-Engineering-Standards.pdf
- City of Mesa – Engineering Procedure Manual, Vol. 2, 2005,
  http://www.cityofmesa.org/building_safety/pdf/Forms/EngineeringDesignStandards2005Edition.pdf
- City of Phoenix – Storm Water Policies and Standards, March 2004,
  http://phoenix.gov/STREETS/index.html
- City of Tempe – Engineering Design Criteria, January 2006,
  http://www.tempe.gov/engineering/design_criteria.htm

The Design Engineer will be responsible to adhere to the latest revisions set forth by the local jurisdiction and understands that it is his responsibility to make himself aware of the local jurisdiction guidelines. Coordinate the drainage study and outfalls with the local jurisdiction and their drainage master plans.

Drainage design shall be in accordance with the standards, practices, and methodology of METRO and the local jurisdiction each project or section of a project falls within. In a case

[1] The Engineer will be responsible to adhere to the latest revisions set forth by the local jurisdiction and understands that it is the Engineer's responsibility to make themselves aware of the local jurisdiction guidelines.

where the local jurisdiction has no codes or standards, the Flood Control District of Maricopa County standards and drainage methodology shall be followed. The drainage design criteria provided in this section shall be considered a minimum standard. Design of river crossings or other waterways under the jurisdiction of the United States Army Corps of Engineers' shall be prepared under a separate report. Waterways under the Army Corp of Engineers may require a Conditional Letter of Map Revision prior to construction and a Letter of Map Revision after construction.

3.3.1 Drainage Facilities Design

Unless otherwise provided, drainage channels, inlet structures and storm sewers shall be designed in accordance with the procedures specified by METRO and the local jurisdiction the facility is located. Hydraulic calculations for culvert capacity shall be in accordance with the latest version of the Drainage Design Manual for Maricopa County, Arizona Volume 2 - Hydraulics.

A drainage report will be required to identify whether the existing storm drain system is adequate. The drainage report shall present alternatives to modify the existing storm drain system, including catch basin upgrades to capture the additional runoff created by the LRT project. METRO will not upgrade existing storm drain systems that are currently undersized.

The existing depth of flow (based on drainage criteria of the local jurisdiction) in all streets shall not be increased due to the LRT guideway. Under no circumstance shall the LRT guideway divert or restrict existing flows. Existing drainage facilities must be protected or upgraded to allow existing flows to travel undiverted to existing outlet points. New LRT storm sewers shall be sized for the design frequency specified by the local jurisdiction.

Necessary replacements of existing storm sewers and appurtenances shall provide services equivalent to existing facilities.

Services to adjoining properties shall be maintained by supporting in place, by providing alternative temporary facilities, or by diverting to other points.

In all cases, design shall be carefully coordinated with the LRT underground electrical and communication system.

3.3.2 Precipitation – Intensity – Duration

Precipitation data shall be based upon NOAA Precipitation – Frequency Atlas of the Western United States. The only deviation from the NOAA Atlas procedures that are currently recommenced is the use of the short – duration (less than 1-hour) rainfall ratios that were published by Arkell and Richards (1986). The depth – duration – frequency (D-D-F) statistics in the NOAA Atlas are shown as a series of isopluvials maps of Arizona for specific durations and return frequencies. Selected isopluvials maps for Maricopa County can be found in the Drainage Design Manual for Maricopa County, Arizona. Volume 1-Hydrology.

3.3.3 Design Discharge

The maximum expected discharge from drainage areas shall be computed using the Rational Method or other applicable procedures as specified in the latest Storm Drainage Manual for the local jurisdiction, or as approved by METRO and the local jurisdiction.

3.3.4 Storm Drain Design

Storm sewers shall be designed in accordance with the procedures specified in the local jurisdiction's Storm Drain Design Manual and may have to be upsized, if the proposed guideways are shown to decrease the allowed existing capacity of flow in the street.

Off-site Criteria for Storm Drain Design generally covers retention basin sizing for those developments not within street right of way. The offsite criteria is governed by the local jurisdiction and is as follows:

- City of Glendale - 100-year, 2-hour
- City of Mesa - 100-year, 2-hour
- City of Phoenix- 100-year, 2-hour
  Unless 100-year design drainage crossings or protection is present guideway elevations shall be set a preferred 20-inches and a minimum 12-inches below the lowest adjacent finished floor upstream from the track. The design should ensure that the highest curb or rail is a minimum 6-inches below the adjacent floors.
- City of Tempe - 100-year, 1-hour

On-site Criteria for Storm Drain Design generally covers the street right of way. Any on-site retention volume to widen the roadway will need to be replaced. Major streets generally require one dry lane for each direction of traffic.

- City of Glendale - 10-year
- City of Mesa - 10-year
  City of Mesa allows spread to outside traffic lane only, not one dry lane.
- City of Phoenix- 2-year
- City of Tempe – 10-year

3.3.5 Minimum Velocities

Minimum velocities in pipes, culverts, and concrete-lined channels shall be 2.5 feet per second when flowing half full. Minimum velocities in the City of Phoenix are five (5) feet per second for the design flow and three (3) feet per second for one half (1/2) the design flow.

3.3.6 Minimum Pipe Sizes

The minimum pipe size for the latest design criteria and standards (i.e. design criteria manuals) of the local jurisdictions laterals and storm drain mainline are as follows:

- City of Glendale – 15" lateral / 18" mainline
- City of Mesa – 15" when the lateral is subject to traffic load and 12" otherwise

- City of Phoenix- 15" lateral / 18" mainline
- City of Tempe - 15" lateral / 18" mainline

The minimum pipe required by METRO for pipe size shall be:

- 24" for culverts (open at both ends) under guideways
- 18" for storm drains including connections to inlets
- 6" for slope drains
- 8" for underdrains

Sizes smaller than these shall not be used without authorization from METRO and the local jurisdiction.

3.3.7 Minimum Pipe Clearance

For new pipes, a minimum of 5'-6" clearance is desirable from the top of the rail to the top of all track drainage pipes passing beneath the guideway bed, unless otherwise approved by METRO. For existing pipes, 4-foot clearance from top of rail to top of pipes, otherwise relocations shall be required. See Figures 3-3 and 3-4.

Design exception will be allowed in instances where the City Engineer and METRO agree that relocation of the required facilities is not feasible due to location and/or cost. The design exception letter template is located in Appendix B as part of this Design Manual.

3.3.8 Pipe Material and Loading

Existing circular storm drains under the guideway shall be evaluated for clearance requirements, material type, and structural strength for the required loadings. A field review of the storm drains needs to be documented as to the type of material, flow line grades, and condition of pipe. As-Built plans may not accurately portray the type or flow line elevations. Drains that do not meet the requirements may need to be replaced. Drains that do meet requirements can be left in place after approval by METRO and the local jurisdiction. Listed below are the types of storm drain material required in the latest design criteria and standards (i.e. design criteria manuals) by each jurisdiction:

- City of Glendale – Rubber Gasket Reinforced Concrete Pipe (RGRCP) per ASTM with a general minimum rating of Class III.
    - Cast-in-place concrete pipes, slotted drains or HDPE pipe shall not be used in the City right-of-way unless approved by the City Engineer.
- City of Mesa - (RGRCP) conforming to Section 618 of the United Standard Specification as published by M.A.G. and as amended by the City of Mesa.
    - RCP is approved for storm drains 36" or larger and conforming to Section 618 of the United Standard Specification as published by M.A.G. as amended by the City of Mesa.
    - Cast in Place Pipe (CIPP) will not be allowed in the vicinity of LRT projects.

- Corrugated Metal Pipe (CMP) and Corrugated Metal Pipe Arch (CMPA) are not approved for use within City of Mesa right-of-way.

- City of Phoenix- All storm drain designs shall be prepared on the basis of using precast reinforced concrete pipe (RCP). RCP storm drain mainline, laterals and catch basin connector pipes shall be rubber gasketed. A field review of existing pipe material shall include obtaining all available as-built information on existing storm drains within 10 feet of the track and a thoroughly documented video of the existing pipe using light rail line stationing prior to final design. If material is cast in place or metal pipe or there is evidence of cracking or less than Class III pipe installation cores shall be taken at a minimum 500 foot intervals in both upper and lower regions of the pipe to insure concrete thickness and integrity. In sections of less than 6-foot cover a second video of hand tested crack thickness evaluation must be done after initial rail bed compaction and prior to placing concrete or ballast.
  - Cast in place, unreinforced concrete pipe (CIPP) is not allowed within any major arterial or collector streets.
  - HDPE can be used but it must be installed per the COP Specifications.
  - The minimum gauge for Corrugated Steel Pipe (CSP) storm drain pipe shall be 14 gage, however this type of pipe is not allowed within public Right-Of-Way. The specific gage specified shall provide a design life of at least 75 years to first perforation based on soil conditions (see "Minimum Gage Thickness for CSP" chart, p. 6-48 of the COP Stormwater Manual). CSP mainline storm drain pipe shall be concrete lined, Type "F" pipe. CSP catch basin connector pipe shall be Type 2, aluminized pipe.
  - Precast pipe will be RGRCP per ASTM C-76. Loading design shall be per City of Phoenix Storm Water Policies Manual Chapter 6.4 using positive projection loading 140 lb/cu. ft. soil load substituting track bedding dead loads and rail car live dynamic loading conditions.
- City of Tempe – RGRCP shall be used.

3.3.9 Corrosion Protection

In all cases, drainage systems shall be designed with consideration for the LRT underground electrical and communications system, and shall include provisions for corrosion protection of facilities against stray currents. Refer to Chapter 19, "Stray Current and Corrosion Control", for additional criteria.

3.3.10 Manholes

Manholes shall be designed according to the local jurisdictions latest Storm Drainage Manual. Manholes shall be provided at all changes in direction and shall be spaced as follows:

- For pipe diameters of 30" or less every 330 feet.
- For pipe diameters of 33" to 45" every 440 feet.
- For pipe diameters of 48" and greater every 600 feet.

3.3.11 Underdrains and Location

Underdrains shall consist only of perforated concrete or perforated plastic pipe at least 6 inches in diameter for lengths less than 500 feet and at least 8 inches in diameter for length greater than or equal to 500 feet. The perforated pipe shall be surrounded by a minimum of 4 inches of gravel drain material, and placed a minimum of 12 inches below subgrade. The underdrain system shall also be wrapped with filter fabric (minimum weight 4 oz/square yard) by placing the fabric between the gravel drain material and surrounding soil.

Underdrains shall be located in areas where it is anticipated that groundwater may interfere with the stability of trackbeds, roadbeds, and side slopes. In general, they may be used, based on geotechnical reports, in the following places:

- Along the toe of a cut slope to intercept seepage.
- Along the toe of a fill on the side from which groundwater emanates.
- Across the roadway at the downhill end of a cut.
- Along the periphery of any paved area under which groundwater is likely to collect.

Underdrains shall be used to drain ballasted track within the street right-of-way.

3.3.12 Slope Protection

Cut slopes shall be protected with intercepting ditches at the top of slope when significant flow may come from the ground surface above the cut. Slope benches shall be sloped toward a ditch running along the bench. Slopes shall be protected where necessary against erosion from concentrated flows with down drains.

3.3.13 Structural Design Codes, Manuals and Specifications

Unless otherwise specified herein, the structural design shall be based on the following codes, manuals, or specifications specified in Chapter 5.

3.3.14 LRT Loading

LRT loading shall be in accordance with Figure 5-1 of Chapter 5 of this manual.

3.4 Right-of-Way

Light Rail Transit right-of-way requirements vary according to guideway configuration, which may be at-grade, on aerial structure, or in underground structure.

Right-of-way is the composite total requirement of all interests and uses of real property needed to construct, maintain, protect, and operate the transit system. Most right-of-way requirements are permanent in nature: however, there will be parcels of land needed on a temporary basis. These temporary parcels will be returned to the owner after the project has been completed. The intent of this project is to acquire and maintain the minimum right-of-way consistent with the requirements and to utilize good right-of-way practices. Because right-of-way plans approved by METRO and the local jurisdictions are used as a basis for acquisition of property; all interests and uses required shall be shown on the right-of-way plans together with the detailed property data.

The taking envelope is influenced by the topography, drainage, ditches, retaining walls, service roads, utilities, and the nature of the structure and side slopes selected.

The limits of permanent right-of-way shall be shown on the right-of-way plans as a line connected by simple curves and tangents. Spiral curves shall not be used in right-of-way descriptions. Chords may be used instead of curves under special conditions.

3.4.1 Types of Right-of-Way

3.4.1.1 Fee Simple

Fee Simple is the highest and most complete ownership known in the law. Fee simple should always be the first type of right-of-way to be considered for any surface or aerial construction. Parcels of land required for the project shall be shown with sufficient dimensions on a set of plans so legal descriptions can be written.

3.4.1.2 Permanent Easement

Easements are rights acquired by someone to use the land or property of another for a special or particular purpose. Easements may be created for a variety of purposes including but not limited to access, drainage, underground, aerial, supporting slopes, and utility. They may involve the right to use only the subsurface of land, only the airspace over the land, or only the surface of the land. Easements shall be shown with horizontal and/or vertical limits as required to encompass the entire facility or structure with dimensions being shown on a set of plans so a legal description can be written.

An easement that provides space for transit structures and for the future maintenance of structures that support aerial facilities located on private property shall have definite lateral limits on the drawings. Where required, upper and/or lower limits shall be described.

3.4.1.3 Temporary Construction Easement (TCE)

Temporary construction easements are usually used for construction purposes. These easements are created with a definite duration period. These easements should provide sufficient space for the contractor to use for his construction purposes. When the project is complete, these easements will revert back to the property owner. Repair of any damages in the TCE area shall be done prior to their return to the property owner.

3.4.1.4 Utility Easements

Utility easements shall be in accordance with local and utility regulations. Bearings and distances along the sides of the easement boundary shall be shown, as well as the length and width of the easements and ties to the limits of the right-of-way.

3.4.1.5 Traffic Easements

Traffic easements may be used for conduits, j-boxes, and loop detectors in areas where sufficient right-of-way is not available.

3.4.2 Right-of-Way Criteria

3.4.2.1 Right-of-Way Limits

The following criteria are provided as a guideline for establishing the limits of right-of-way. The dimensions are given for minimum conditions and may need to be modified where engineering or real estate requirements dictate additional needs. Right-of-way limits shall be vertical or horizontal planes.

- At-Grade Construction
  - Upper Limit

    Normally an upper limit is not required. When an upper limit is required, the limit shall be described by the elevations of horizontal planes, stepped as required, and co-locating the steps with existing property lines or prominent suitable topographical features. The minimum desirable vertical distance from top of catenary support structure to horizontal plane is 2.0 feet.
  - Lateral Limit

    On exclusive rights-of-way, the minimum allowable distance from the centerline of the nearest track to the limit of the right-of-way is 8.0 feet.

    On restrictive rights-of-way, the minimum right-of-way is 29.0 feet.

    Additional distances required, such as for maintenance road and drainage ditches, shall be added to the above.

    In retained cuts or on retained fills, the minimum right-of-way required is measured laterally to 2 feet outside the outside edge of the retaining wall footing. Allowances shall be made for pile encroachments. In side cuts and unretained open cuts or fills, the slopes shall include side ditches plus 12 inches rounding. Soil walls and tie back walls shall have a minimum 5' beyond the anchorage.
  - Lower Limit

    The lower limit, when required, shall be defined in a manner similar to that for the upper limit, using a minimum vertical distance of 10 feet below top of rail, except in retained fill sections where the lower limit shall include the structural support system required for fill sections.
- Aerial Construction
  - Upper Limit

    Where required by local conditions, the upper limit is delineated by elevations of horizontal planes, stepped as required, co-locating the steps with existing property lines or prominent suitable topographical features. The minimum required vertical distance from the top of catenary support structure to the horizontal plane is 2.0 feet.
  - Lateral Limit

    The lateral limit is 10 feet outside the centerline of each track. Additional permanent and/or temporary easements may be required for maintenance of and repairs to structures.

- Lower Limit

  The lower limit, where required by local conditions and/or specifically directed by METRO, shall be the ground level with specified use restrictions, except for crossing other rights-of-way. For aerial support structures, the lower limit shall include the support foundations.

- Storm Drainage
  - Open Ditches

    The minimum total width for surface drainage easements shall be governed by local authority requirements, but in no case shall it be less than 6 feet for paved ditches and channels, and 8 feet for unpaved ditches.

  - Underground Drainage

    Easement widths for underground drainage systems shall be approved by the local agency involved. As a guideline, the minimum easement width is 10 feet with 2 feet minimum clearance from outside edge of structure to easement line.

- Stations
  - Right-of-way required for stations shall include, but not be limited to, the space needed for platforms and shade structures, fare collection, waiting areas, station ancillary facilities, "such as kiosk elements", for maps and/or station identification, bike racks, landscape and enhanced landscaping at Station areas, and lighting. In addition to the structural, mechanical, and electrical requirements for space, the requirements for pedestrian and vehicular circulation space shall be observed.

3.4.3 Right-of-Way Information Requirements

Information on right-of-way plans shall be sufficient to prepare legal documents to allow the transfer of land title. Plans should identify the right-of-way as being "open to the public" and "closed to the public" including continuous crossing public as well as private space. Such private space shall be identified.

- Curve Data

  Spirals shall be reduced to circular curves at the limits of the right-of-way. Circular curves are the only types of curves acceptable for recording purposes. Curve data shall be shown on the right-of-way plan sheet in the table of curve data.

  Plans shall show the right-of-way envelope as being continuous crossing public as well as private space. Such private space shall be identified.

- Isolated Right-of-Way

  The boundary for areas supporting new construction, such as power substations, shall be defined geometrically with ties shown wherever the location is not contiguous to the right-of-way.

- Street Closings

  Separate drawings showing the areas of public property to be enclosed and used for the transit system shall be provided. These drawings shall be prepared in accordance with local government requirements.

3.4.4 Fencing

Fencing may be required in certain areas to provide security. Fencing shall be parallel to the track, forming an open-ended envelope and allowing unrestricted LRT movement.

Vehicle service, maintenance, and storage areas shall be secured by perimeter fencing.

Size and type of fencing or barrier shall be as determined by site-specific requirements and by the development requirements of the local jurisdiction.

3.5 Acquisition Process

The acquisition process involves several real estate components; which are completed in a sequential manner. The total acquisition process takes from 12 to 20 months to complete depending on the complexity of the negotiations and relocation requirements.

On federally funded projects the Record of Decision by the FTA would allow the acquisition process. Title reports on affected parcels should be requested at this time to identify the ownership and title encumbrances. The "total acquisition" parcels should be identified at this time so appraisals can be completed for acquisition. The offers made for partial acquisition parcels should begin no later than halfway through the final design phase.

On locally funded projects title reports on affected parcels should be requested at approximately the 30% level of the design process to identify ownership and title encumbrances. The "total acquisition" parcels shall also be identified at this time so appraisals can be completed for acquisitions.

For additional acquisition details refer to the Real Estate Acquisition Management Plan.

All easements and right-of-way shall be verified and recorded after construction and revised as necessary.

3.6 Roadways

3.6.1 General

Unless otherwise specified, all road and street design shall be in accordance with the most current specifications and design guidelines of the involved local jurisdiction. For those cases where the local jurisdictions have no design guidelines, the latest Maricopa Association of Government (MAG) Uniform Standard Specification and Details for Public Works construction shall be used.

The design of public streets adjacent to the LRT facilities shall not preclude the construction of LRT stations as discussed in Chapter 6 and the operation of light rail vehicles (LRV) as detailed in Chapter 7.

The criteria set forth in this section are applicable to the design of alterations of existing streets, new streets, and access roads.

The basis of design for alterations of existing and modified streets shall be to replace in kind, unless approved by METRO and the local jurisdiction. New facilities shall be designed in conformance with the standards of the local jurisdiction and each city's supplements to the MAG Standards and/or Specifications.

3.6.2 Roadway Geometrics

All horizontal alignment of public streets shall conform to the current specifications and standards of the involved local jurisdiction. In a case where the local jurisdictions have no codes or standards, the latest English version of the AASHTO A *Policy on Geometric Design of Highways and Streets* shall be followed.

All vertical geometric curves of public streets shall conform to the current specifications and standards of the involved local jurisdictions. In a case where the local jurisdictions have no codes or Standards, the latest English version of the AASHTO A *Policy on Geometric Design of Highways and Streets* shall be followed.

All roadway sections of public streets shall conform to the current specifications and standards of the involved local jurisdictions. In a case where the local jurisdictions have no codes or standards, the latest English version of the AASHTO A *Policy on Geometric Design of Highways and Streets* shall be followed, and as listed below in these criteria. See Figures 3-3, 3-4, and 3-12 to 3-17. .

3.6.3 Traffic Lane Widths

The following criterion indicates the minimum and desirable traffic lane widths. During the early stages of design, the design shall reference and compare the lane widths to the local jurisdiction's design criteria and standards. Traffic Lane widths shall be approved by METRO and the local jurisdiction early in the design.

In cases of lateral constraint, a width reduction may be necessary and would require local jurisdiction approval.

- Through and Left Turn Lanes = *10' absolute minimum
  11' minimum
  12' desirable
- Right Turn Lanes/Curb Lanes = *10' absolute minimum
  11' desirable
  12' desirable minimum (City of Phoenix)
- Left and Right Turn Storage Lanes** = *16' absolute minimum
- One lane with barrier curbs = *16' absolute minimum
  18' minimum
  20' desirable

- Curb lane with parking = *18' absolute minimum
  19' minimum
  20' desirable
- Parking lane = 8' minimum
- Bike Lanes = 4' minimum - to lip of Gutter
  = 5.5' minimum - to face of curb
  = 6.0' desirable – to face of curb

* Requires approval of local jurisdiction prior to use.

** Use local jurisdiction design standards for storage lengths. If a traffic analysis is available, the turn lane storage lengths shall be determined based on the results of the analysis.

3.6.4 Bus Bays

Bus bay design shall reference MAG Standard Detail No. 252 with a 10' bus bay minimum width and a desirable width of 13' or local jurisdiction standard detail, if applicable. Location of bus bays, bus bay shelters and installation and removal of existing bus bays/bus bay shelters are an important design feature and shall be evaluated and approved early in design with METRO, the local jurisdiction and the public transit department.

3.6.5 Paving

Paving replacement, whether total reconstruction, replacement of roadway cross section or a pavement overlay, shall be evaluated on a "case-by-case" basis. In some circumstances, the replacement of pavement is a non-5309 cost to the local jurisdiction because they are receiving an enhancement.

It is recommended that a pavement design report be prepared by a geotechnical engineering firm and recommendations for paving replacement be approved by the local jurisdiction and METRO.

In general, the structural cross section of new pavements shall be designed to meet or exceed a 20-year life cycle to support the anticipated traffic use.

Road and parking surfaces shall be either concrete or asphalt. In areas of transit bus stops, reinforced Portland cement concrete pavement is preferred.

All pavements in public streets shall be in conformance with the current specifications and practices of the involved local jurisdictions. In a case were the local jurisdictions have no codes or standards, the MAG Standard Details and Specifications shall be followed.

Restored pavements shall conform to widths prevailing prior to LRT construction. No street, sidewalk, or alley widening shall be included, unless required by new construction, or previously agreed to between the jurisdiction and METRO.

3.6.6 Curbs and Curb Cuts

When new curb is constructed, the height of the vertical curb face above the finished pavement elevation shall be 6 inches or to the existing height if taller than 6 inches. Vertical curb constructed within ADOT right-of-way shall be seven (7) inches in height. Vehicle curb constructed within the City of Tempe on arterial roadways shall be seven (7) inches in height. The curb face may be decreased to no less than 4 inches along existing streets and sidewalks in order to minimize areas of sidewalk reconstruction and impacts to adjacent properties, subject to the approval of the local governing jurisdiction.

Curb returns shall be 35' radius at signalized intersections, as necessary, to prevent encroachment of large vehicles onto the guideway, or per the local jurisdictions design standard. Occasional curb return designs that differ from the standard require approval by the local jurisdiction.

The Design Engineer shall verify adequate curb return design radii using turn template applications, at locations that require special needs, such as skewed intersections, large/oversize truck movements, etc. These locations shall be identified early in design.

The design of curb cuts and ramps shall be in strict accordance with the latest applicable provisions of the American with Disability Act of 1990 and 49 CFR Parts 37 and local jurisdictions standards and applications.

Curb cuts are to be included when curbs in public space are constructed or restored as part of the LRT Project.

3.6.7 Driveways and Alleys

Driveway and Alley designs shall comply with the local jurisdiction design standards and criteria and shall comply in strict accordance with the latest applicable provisions of the American with Disability Act of 1990 and 49 CFR Parts 37.

Driveway and alley curb and sidewalk design that require ADA ramps, shall be located within the local jurisdiction's right of way. This may require purchase of additional right of way and will require approval from METRO and the local jurisdiction.

Driveways shall not be added for vacant lots without approval of the local jurisdiction.

3.6.8 Sidewalks

The Design Engineer shall reference the local jurisdictions design standards for the width of sidewalk and the width of the landscape buffer between the back of curb and new sidewalk. Generally, a 6' minimum sidewalk width adjacent to the back of curb with a 5' sidewalk when off-set from the back of curb are preferred. Higher pedestrian generators may require wider sidewalks. Sidewalk design and width shall be approved by the local jurisdiction.

At station locations, refer to Chapter 6.0 of Metro Design Criteria Manual for standard sidewalk and landscaped area widths.

Decorative sidewalks, including "Art", which are impacted by LRT construction, shall be replaced in kind.

Replacement of sidewalk due to other incidental work such as utility relocations, conduit/traffic signal installation, street lighting, etc, shall be considered part of the project and approved by METRO and the local jurisdiction for the limits of replacement.

Impacts to local business and residential properties shall be considered in the design of the project due to replacement of sidewalks.

The design of curb ramps within sidewalks shall be in strict accordance with the latest applicable provisions of the American with Disability Act of 1990 and 49 CFR Parts 37 and local jurisdictions standards and applications.

Streetscapes shall be designed so that street light poles, power poles, guy wires, OCS and other poles are located outside of the sidewalks, whenever possible, or the sidewalk widened to maximize clear paths for pedestrians.

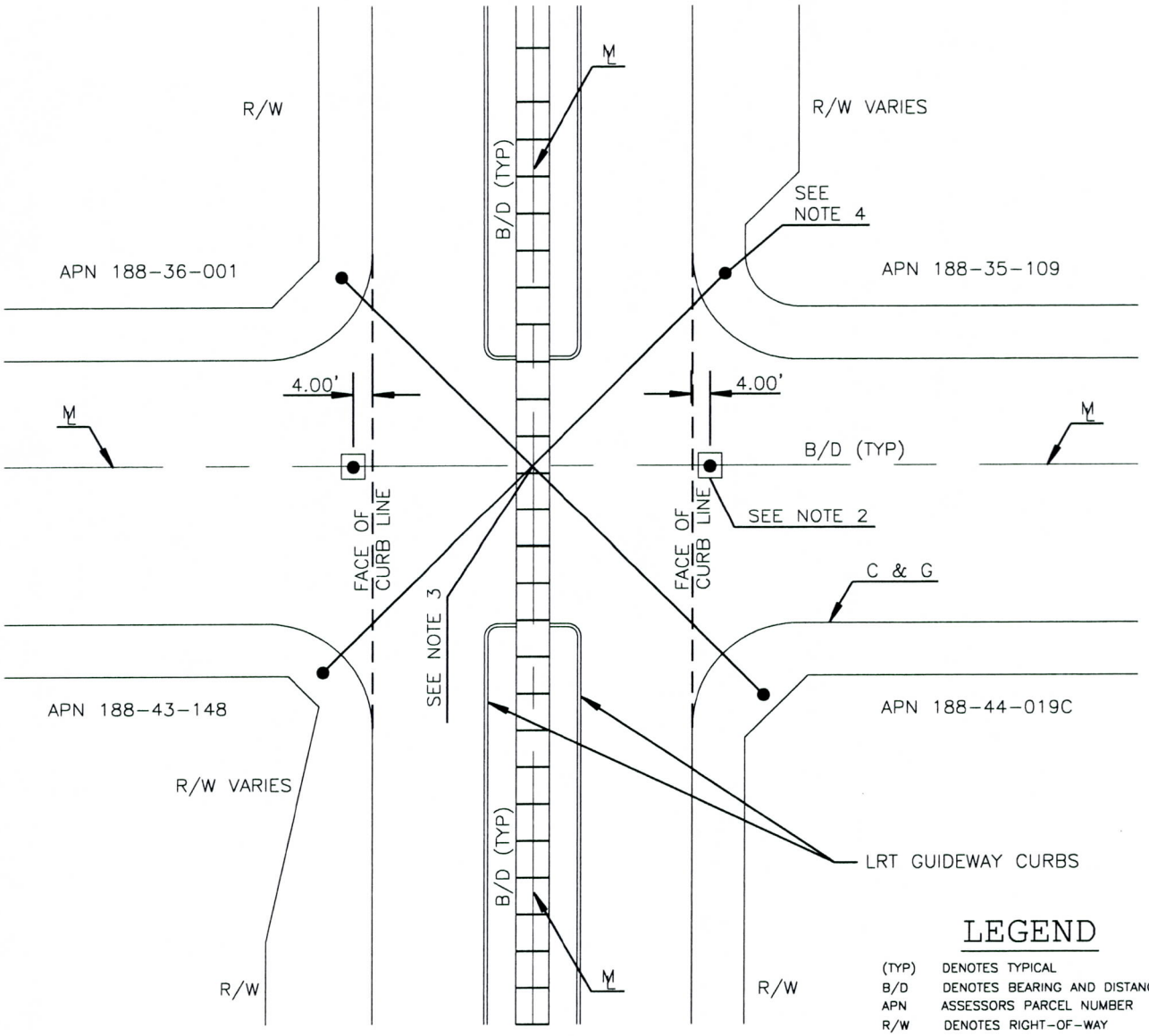

NEW SURVEY MONUMENTATION AT STREET CROSSINGS

SCALE: N.T.S.

NOTES

1. AERIAL, STREET IMPROVEMENTS AND RAILROAD PLANS WILL NEED TO BE REVIEWED AND ANALYZED FOR BEST LOCATIONS, PRIOR TO SETTING FINAL MONUMENTS.

2. M.A.G. STANDARD DETAILS FOR MONUMENTS (HANDHOLE AND SURFACE TYPE MONUMENTS) SHALL BE USED FOR ALL NEW MONUMENTS SET.

3. EXISTING MONUMENTS TO BE TIED TO IMPROVEMENTS AND PERMANENTLY REMOVED.

4. TANGENT TIES TO BE SET ON EXISTING IMPROVEMENTS (CURB AND/OR SIDEWALKS) USING 1 1/2" BRASS CAPS. TIES TO BE INCLUDED IN OVERALL TRAVERSE/CONTROL NETWORK. MONUMENT TIES SHALL NOT BE LOCATED IN THE CENTER OF SIDEWALK CURB RAMPS. LOCATE IN BACK OF RAMP OR RAMP CURB.

NOTES CON'T

5. RECORD OF SURVEY TO BE PREPARED SHOWING ORIGINAL MONUMENT LAYOUT WITH ANNOTATION AND NEW SYSTEM OF MONUMENTS INCLUDING ANNOTATION FOR ALL TIES AND MID-POINT MONUMENTS, SO THAT ANY ONE MONUMENT CAN BE USED ALONG WITH ANY OTHER SINGLE MONUMENT. FULL PERIMETER OF SECTION, INCLUDING MID-SECTION LINES, TO BE SURVEYED AND ANNOTATED ON SURVEY. FINAL SHEET OF SET SHALL ALSO INCLUDE COORDINATE PRINTOUT OF ALL POINTS IN SYSTEM. POINTS TO BE PRINTED TO THE EIGHTH (8) DECIMAL PLACE.

6. SEQUENCE OF SURVEY
   - A) MONUMENTS TO BE REMOVED TO BE TIED OUT FIRST.
   - B) MONUMENTS TO BE REMOVED AND RELOCATED TO BE RESET AT 4 FEET FROM CURB LINES AND ON SECTION LINES.
   - C) TRAVERSE AND PREPARATION OF SYSTEM.
   - D) CONSTRUCTION OF RAILROAD.
   - E) PREPARATION OF RECORD OF SURVEY, CITY APPROVAL, RECORDATION OF SURVEY.

METRO	VALLEY METRO RAIL, INC.	DESIGN CRITERIA	DATE January, 2007
		SURVEY MONUMENTATION	FIGURE NO. 3-1

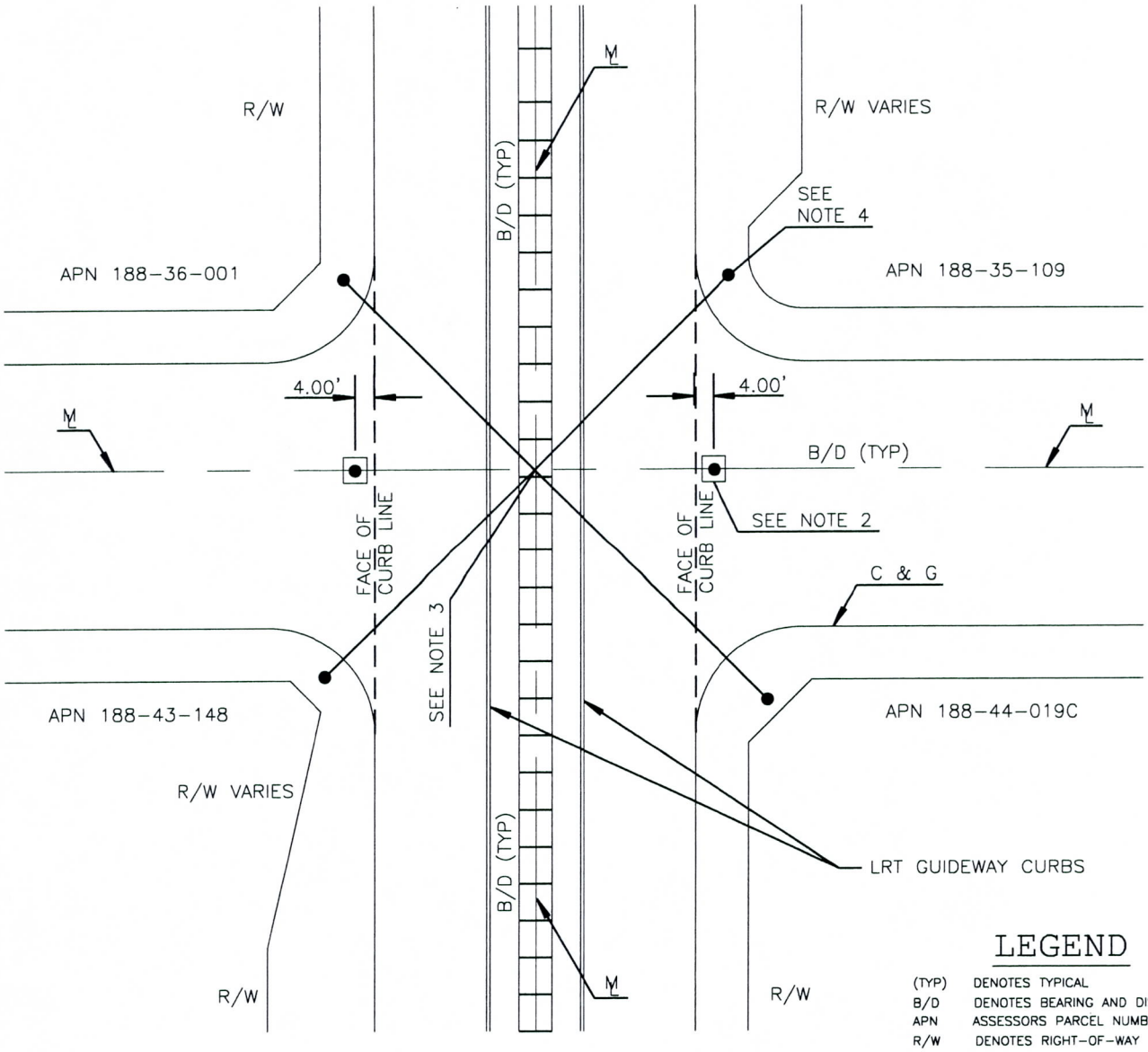

LEGEND

(TYP)	DENOTES TYPICAL
B/D	DENOTES BEARING AND DISTANCE
APN	ASSESSORS PARCEL NUMBER
R/W	DENOTES RIGHT-OF-WAY

NEW SURVEY MONUMENTS AT STREET CROSSINGS CUT OFF BY THE LRT

SCALE: N.T.S.

NOTES

1. AERIAL, STREET IMPROVEMENTS AND RAILROAD PLANS WILL NEED TO BE REVIEWED AND ANALYZED FOR BEST LOCATIONS, PRIOR TO SETTING FINAL MONUMENTS.
2. M.A.G. STANDARD DETAILS FOR MONUMENTS (HANDHOLE AND SURFACE TYPE MONUMENTS) SHALL BE USED FOR ALL NEW MONUMENTS SET.
3. EXISTING MONUMENTS TO BE TIED TO IMPROVEMENTS AND PERMANENTLY REMOVED.
4. TANGENT TIES TO BE SET ON EXISTING IMPROVEMENTS (CURB AND/OR SIDEWALKS) USING 1 1/2" BRASS CAPS. TIES TO BE INCLUDED IN OVERALL TRAVERSE/CONTROL NETWORK. MONUMENT TIES SHALL NOT BE LOCATED IN THE CENTER OF SIDEWALK CURB RAMPS. LOCATE IN BACK OF RAMP OR RAMP CURB.

NOTES CON'T

5. RECORD OF SURVEY TO BE PREPARED SHOWING ORIGINAL MONUMENT LAYOUT WITH ANNOTATION AND NEW SYSTEM OF MONUMENTS INCLUDING ANNOTATION FOR ALL TIES AND MID-POINT MONUMENTS, SO THAT ANY ONE MONUMENT CAN BE USED ALONG WITH ANY OTHER SINGLE MONUMENT. FULL PERIMETER OF SECTION, INCLUDING MID-SECTION LINES, TO BE SURVEYED AND ANNOTATED ON SURVEY. FINAL SHEET OF SET SHALL ALSO INCLUDE COORDINATE PRINTOUT OF ALL POINTS IN SYSTEM. POINTS TO BE PRINTED TO THE EIGHTH (8) DECIMAL PLACE.
6. SEQUENCE OF SURVEY
   - A) MONUMENTS TO BE REMOVED TO BE TIED OUT FIRST.
   - B) MONUMENTS TO BE REMOVED AND RELOCATED TO BE RESET AT 4 FEET FROM CURB LINES AND ON SECTION LINES.
   - C) TRAVERSE AND PREPARATION OF SYSTEM.
   - D) CONSTRUCTION OF RAILROAD.
   - E) PREPARATION OF RECORD OF SURVEY, CITY APPROVAL, RECORDATION OF SURVEY.

2:44:12 PM

METRO	VALLEY METRO RAIL, INC.	DESIGN CRITERIA	DATE January, 2007
		CIVIL MONUMENTATION	FIGURE NO. 3-2

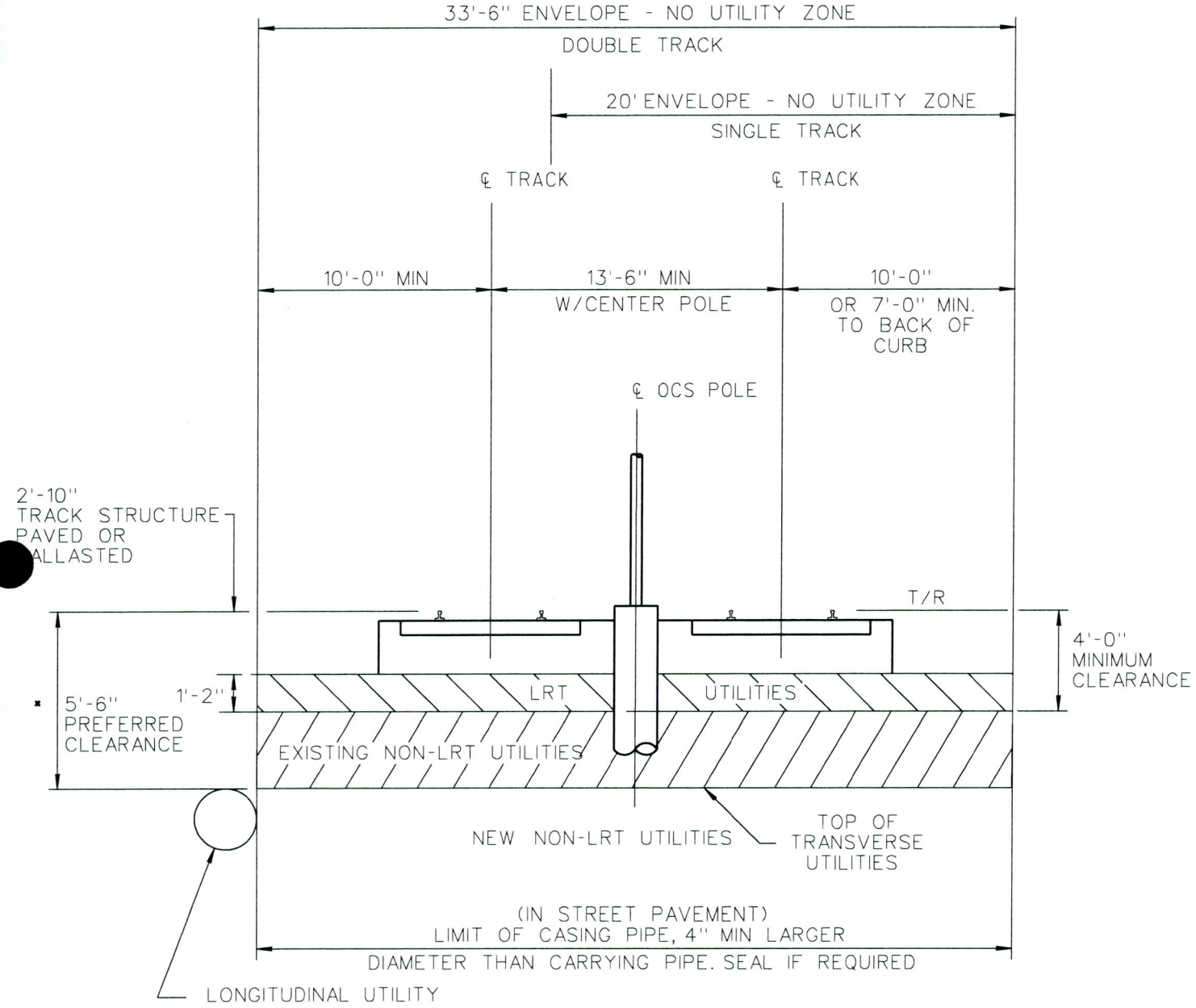

* NOT TO BE REDUCED WITHOUT PRIOR APPROVAL FROM METRO

METRO	VALLEY METRO RAIL, INC.	DESIGN CRITERIA	DATE January, 2007
		LRT INSTREET TRACKS NO UTILITY ZONE FOR UNDERGROUND UTILITIES	FIGURE NO. 3–3

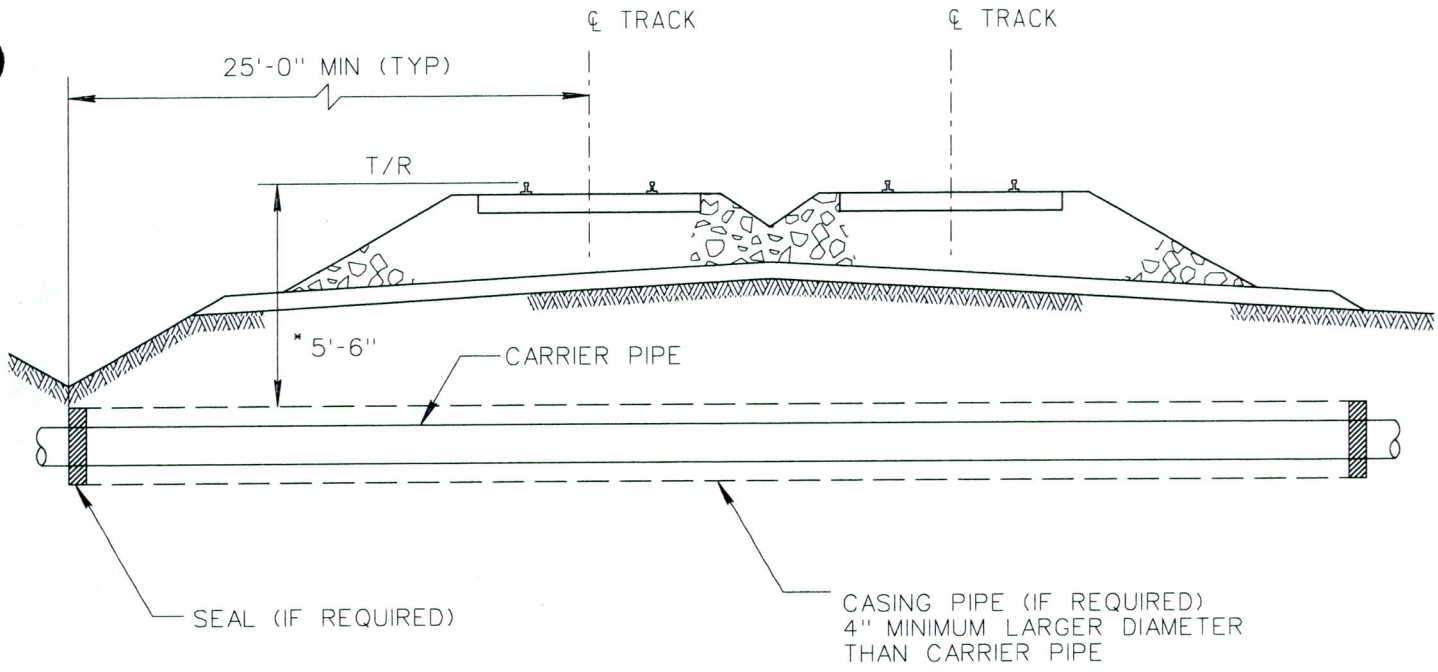

BENEATH LRT

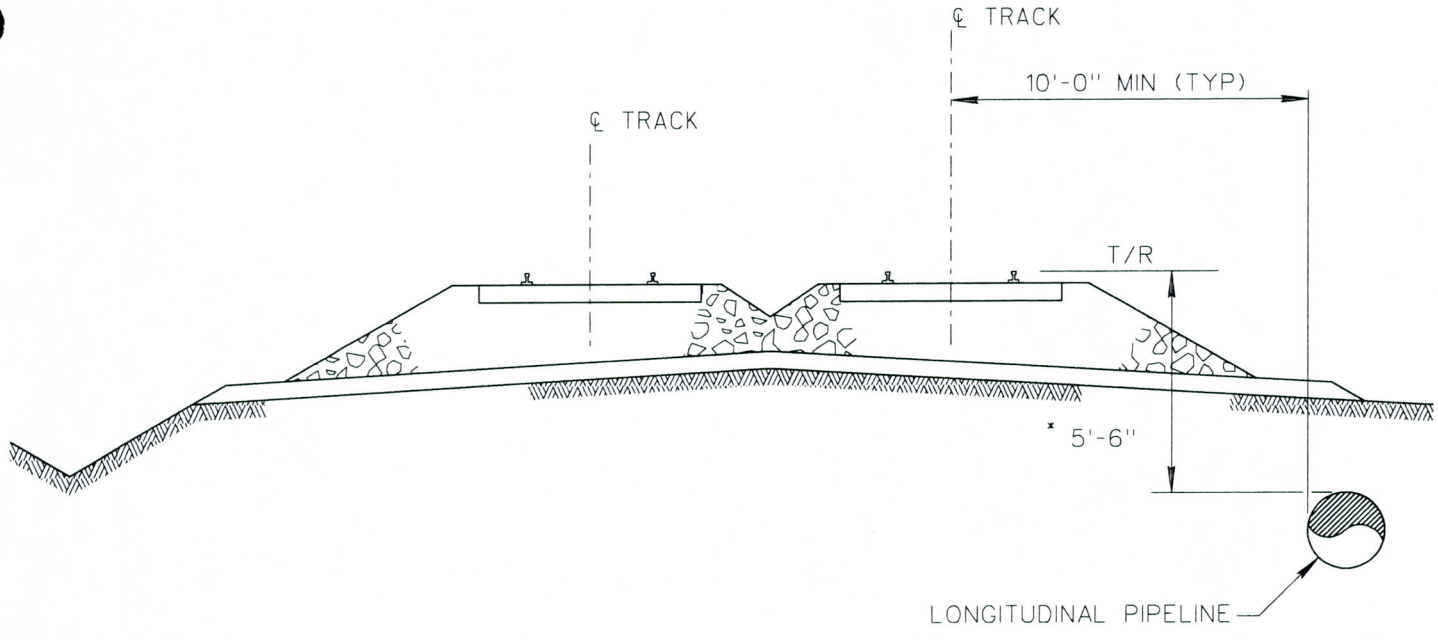

ADJACENT TO LRT

* NOT TO BE REDUCED WITHOUT PRIOR APPROVAL FROM METRO

METRO	VALLEY METRO RAIL, INC.	DESIGN CRITERIA	DATE January, 2007
		TYPICAL UTILITY LOCATIONS OPEN BALLASTED TRACK SECTION	FIGURE NO. 3–4

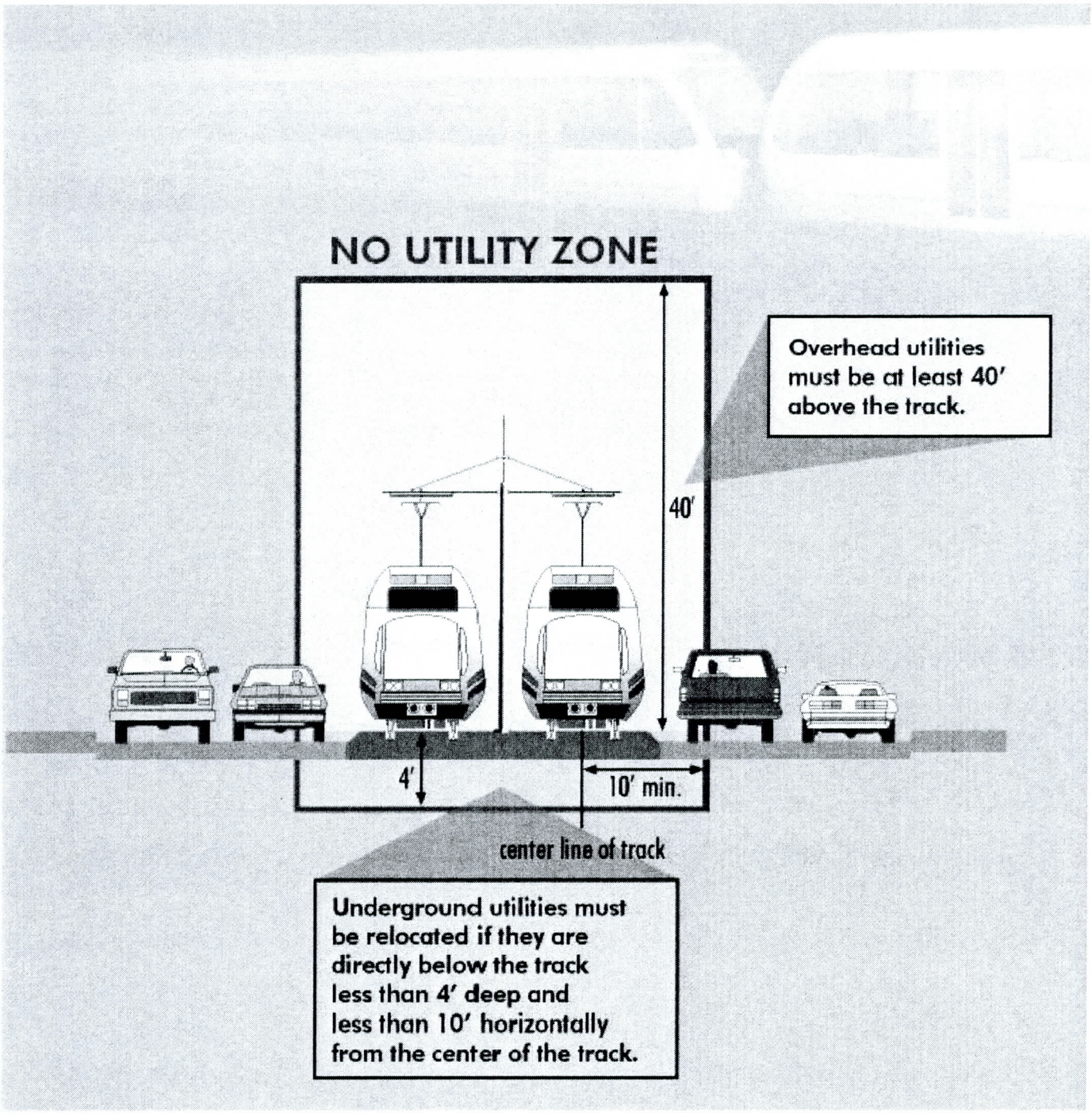

METRO	VALLEY METRO RAIL, INC.	DESIGN CRITERIA	DATE January, 2007
		UTILITY ZONE	FIGURE NO. 3–5

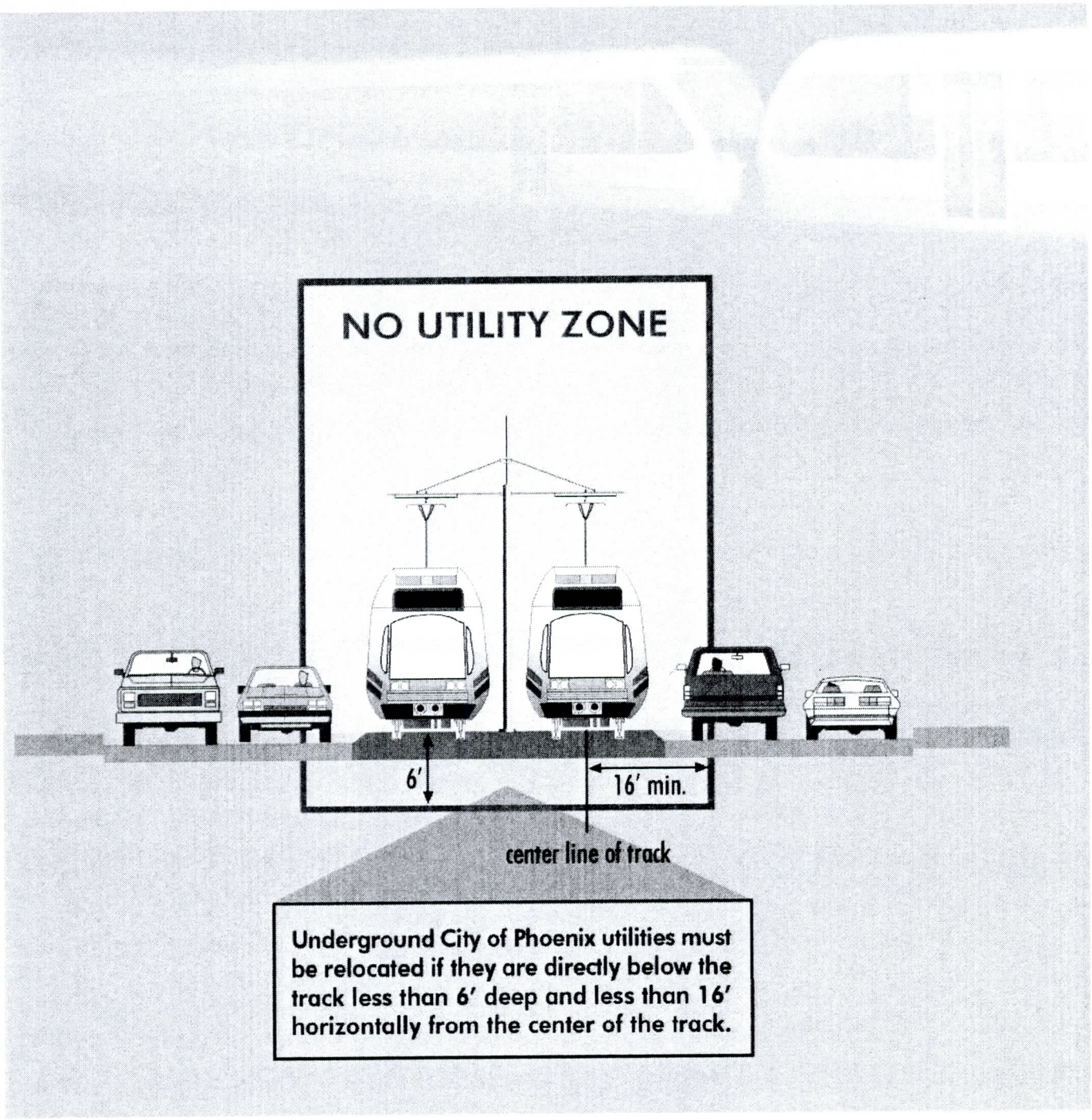

METRO	VALLEY METRO RAIL, INC.	DESIGN CRITERIA	DATE January, 2007
		COP UTILITY ZONE FOR WATER / SEWER	FIGURE NO. 3-6

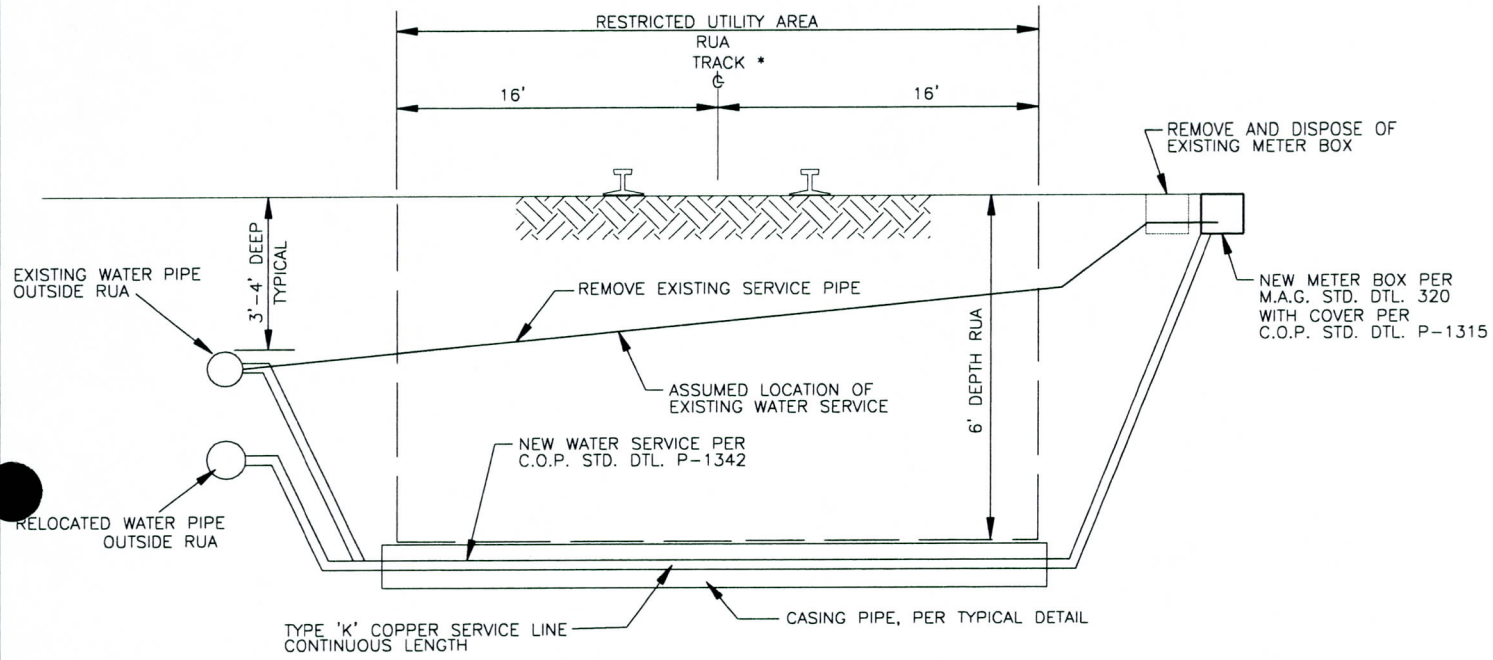

NOTES:

1. NEW SERVICE TAPS ON EXISTING MAINS SHALL BE INSTALLED BY THE CITY OF PHOENIX. CONTRACTOR SHALL SUPPLY MATERIAL PER SPECIFICATION AND COORDINATE WITH CITY CREWS.
2. EXISTING METER BOXES IMPACTED BY PROPOSED ROADWORKS SHALL BE REPLACED AND LOCATED TO OUTSIDE THE TRAVELED ROADWAY AS INDICATED ON THE PLANS. NEW BOXES AND APPURTENCANCES PER CITY STANDARDS SHALL BE PROVIDED BY THE CONTRACTOR. THE EXISTING METER CAN BE REUSED. RELOCATED METERS WILL BE INSTALLED BY CONTRACTOR. NEW METERS SHALL BE INSTALLED BY CITY CREW. CONTRACTOR SHALL COMPLETE ALL CONNECTIONS.
3. CASING DIAMETER SHALL BE 4" FOR 1" OR SMALLER SERVICE PIPES AND 6" FOR 1.5" TO 2.5" SERVICE PIPES. COORDINATE W/ CASING DETAIL.

* EXTEND 10' MIN. BEYOND STATION PLATFORM WHERE APPLICABLE.

METRO	VALLEY METRO RAIL, INC.	DESIGN CRITERIA	DATE January, 2007
		COP WATER SERVICE CROSSING METRO	FIGURE NO. 3-7

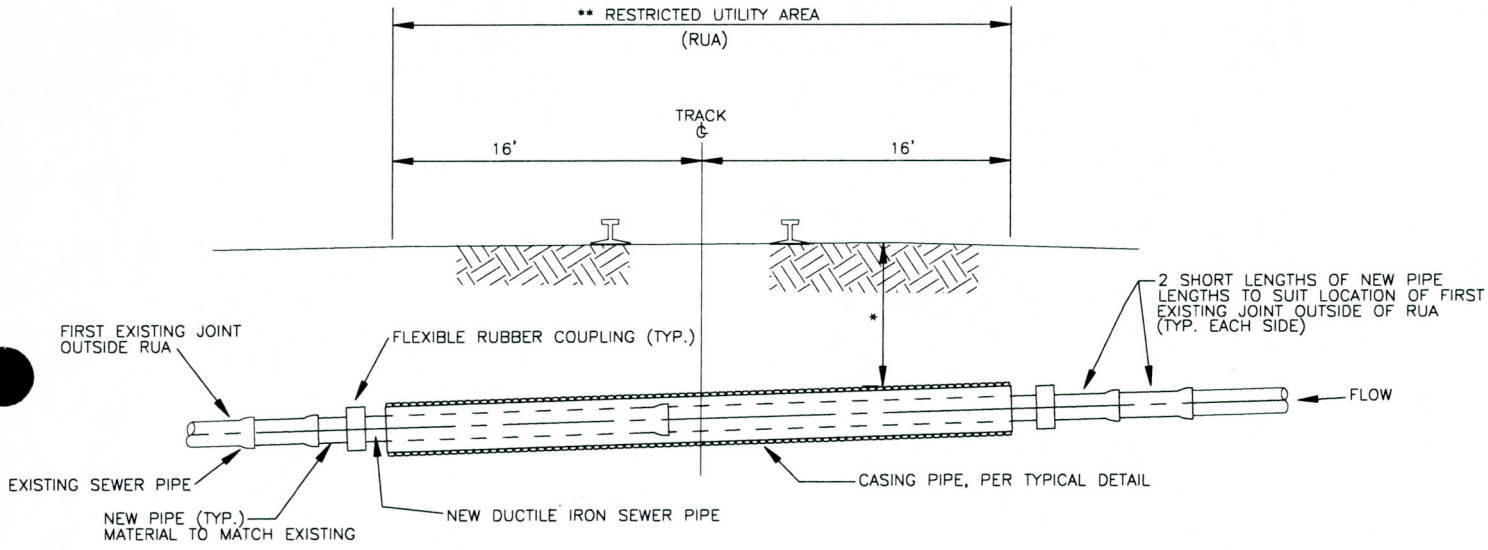

* 6 FOOT MINIMUM COVER WHEREVER POSSIBLE. REDUCED DEPTH ACCEPTABLE WHERE APPROVED BY ENGINEER.

** EXTEND 10' BEYOND STATION PLATFORM

METRO	VALLEY METRO RAIL, INC.	DESIGN CRITERIA	DATE January, 2007
		COP SANITARY SEWER SERVICE CROSSING METRO	FIGURE NO. 3-8

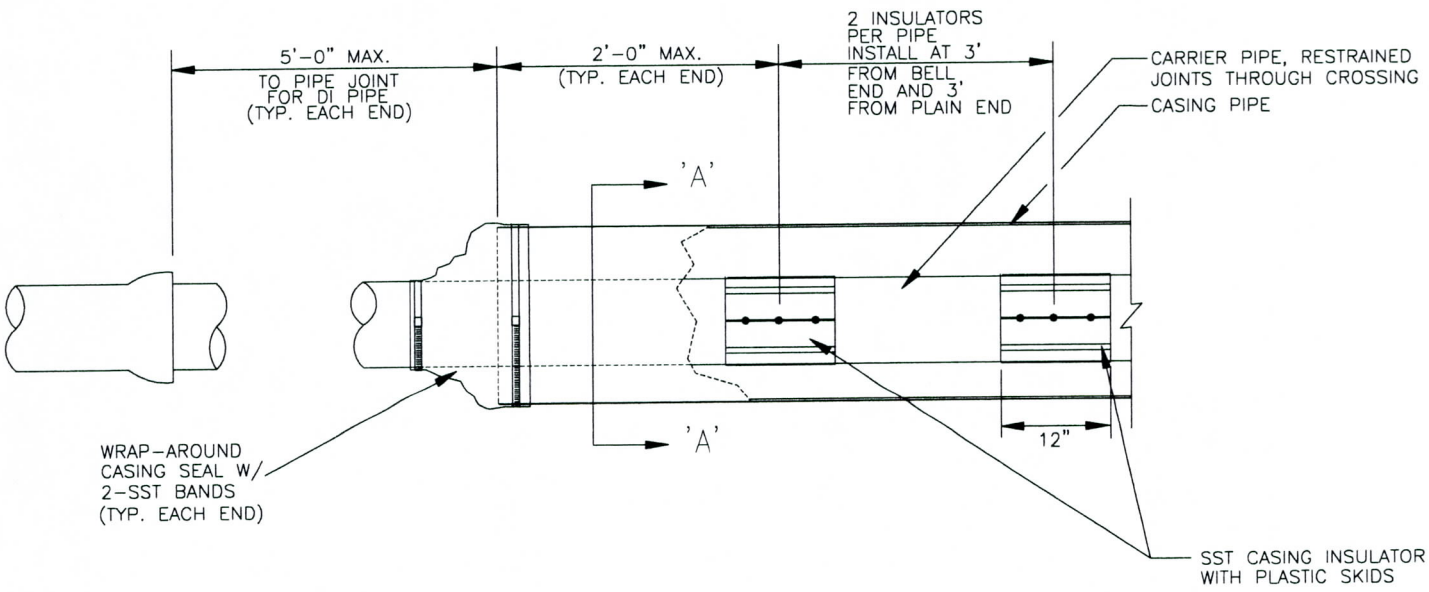

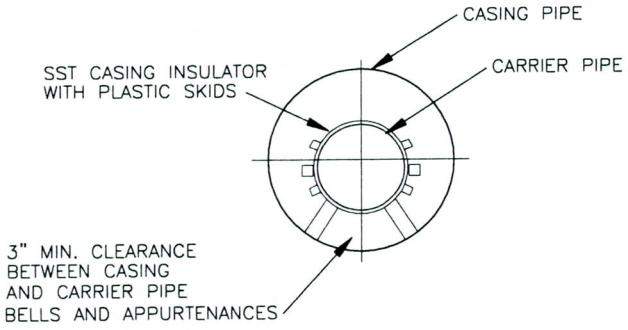

SECTION 'A-A'

CASING NOTES:

1. SEE SPECIFICATIONS FOR CASING TYPE, DIMENSIONS AND COATING REQUIREMENTS.
2. CASINGS SHALL BE INSTALLED WITH SAME PIPE ZONE BEDDING AND BACKFILL AND TRENCH BACKFILL REQUIREMENTS AS PIPELINES.
3. ONE JOINT MAXIMUM PER CROSSING ON CASING.
4. CASING SHALL BE INSTALLED IN ONE SOLID LENGTH WITH FULL PENETRATION WELDS; OR IN TWO SECTIONS, BUTT JOINTED WITH FULL STRENGTH BUTT STRAPS; OR IN TWO SECTIONS BUTT JOINTED WITH FOUR 3" TACK WELDS (MIN) EVENLY SPACED AROUND CASING JOINT CIRCUMFERENCE WITH DRESSER COUPLING OVER JOINT.

METRO	VALLEY METRO RAIL, INC.	DESIGN CRITERIA	DATE January, 2007
		CASING DETAIL	FIGURE NO. 3-9

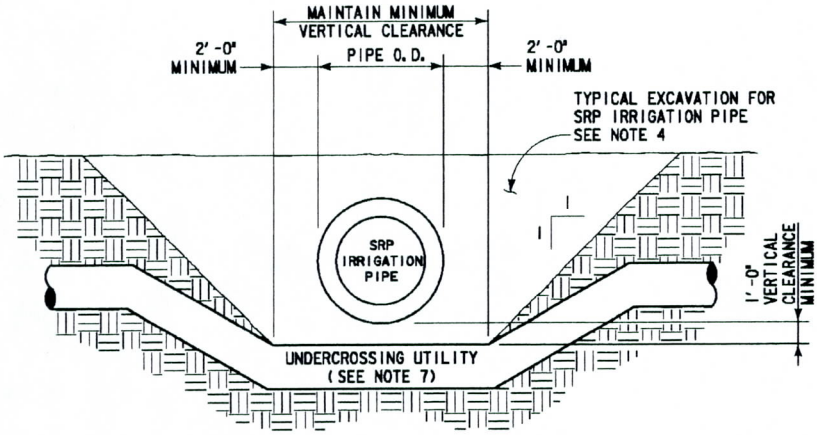

PIPELINE - UTILITY CROSSING

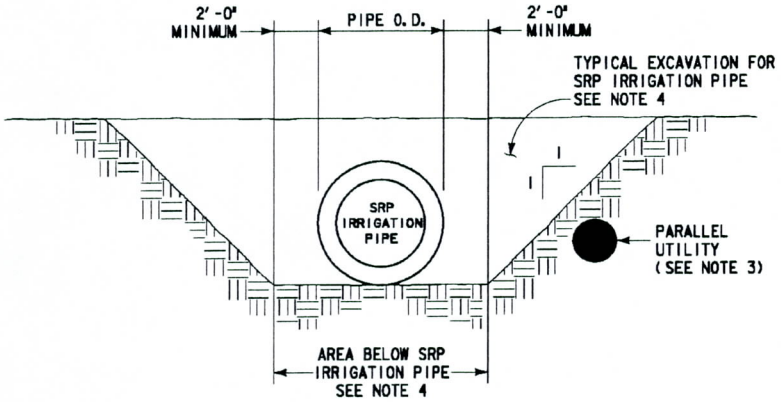

PIPELINE - PARALLEL UTILITY

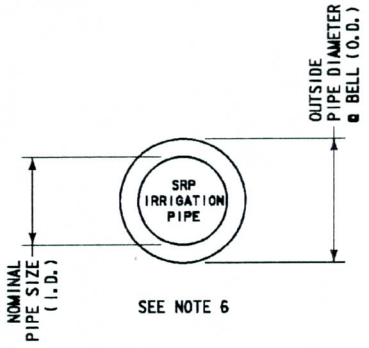

NOMINAL PIPE SIZE (I.D.)	OUTSIDE PIPE DIAMETER AT BELL (O.D.)
24"	37"
30"	45"
36"	53"
42"	60"
48"	68"
54"	75"
60"	82"
66"	89"
72"	91"

OUTSIDE DIAMETER SRP IRRIGATION PIPE

NOTES

1. OVERCROSSINGS OF SRP IRRIGATION PIPE ARE REVIEWED ON A CASE-BY-CASE BASIS. EXCEPT FOR THOSE CASES SPECIFICALLY IDENTIFIED BELOW, OVERCROSSINGS ARE TYPICALLY NOT ALLOWED.
2. MAINTAIN MINIMUM 3' CLEARANCE BETWEEN SRP IRRIGATION PIPE AND OVERCROSSING SINGLE-SERVICE (RESIDENTIAL) UTILITY LINES OF 1" DIAMETER OR LESS, STREET LIGHT ELECTRIC LINES, OR TRAFFIC SIGNAL ELECTRIC LINES.
3. UTILITIES PARALLEL TO SRP IRRIGATION PIPE ARE REVIEWED ON A CASE-BY-CASE BASIS. LOCATE PARALLEL UTILITY OUTSIDE OF AREA SRP EXCAVATES WHEN MAINTAINING IRRIGATION PIPE. TYPICAL EXCAVATION INCLUDES AREA ABOVE AND TO EACH SIDE OF SRP IRRIGATION PIPE. SIDE EXCAVATION INCLUDES AREA ABOVE A LINE EXTENDING UPWARD AND OUTWARD AT A ONE-TO-ONE SLOPE FROM A POINT LEVEL WITH THE BOTTOM OF AND TWO FEET BEYOND THE SIDE OF THE OUTSIDE BELL DIAMETER OF THE SRP IRRIGATION PIPE.
4. OTHER UTILITIES NOT PERMITTED IN THESE AREAS.
5. CLEARANCE IS MEASURED FROM OUTSIDE BELL DIAMETER OF SRP IRRIGATION PIPE. OUTSIDE BELL DIAMETER IS SIGNIFICANTLY LARGER THAN NOMINAL PIPE SIZE (INSIDE DIAMETER) NOTED ON PLAN/PROFILE DRAWINGS. SEE TABLE FOR NOMINAL PIPE SIZES AND OUTSIDE BELL DIAMETERS.
6. SPECIFIED CLEARANCES ARE FOR USE WITH RUBBER GASKETED REINFORCED CONCRETE PIPE (RGRCP) UP TO AND INCLUDING 72" NOMINAL PIPE SIZE. GREATER CLEARANCE OR REPLACEMENT IS REQUIRED FOR LARGER DIAMETER RGRCP, CAST-IN-PLACE PIPE (CIPP) AND NON-REINFORCED CONCRETE PIPE.
7. ASSURE CONTINUOUS SUPPORT AND PROTECTION OF SRP IRRIGATION PIPE. DAMAGE TO SRP IRRIGATION PIPE/SYSTEM WILL BE REPAIRED BY SRP. ALL DIRECT AND INDIRECT COSTS SHALL BE BORNE BY OTHER UTILITY/LICENSEE.
8. TRENCH BACKFILL COMPACTION SHALL BE MARICOPA ASSOCIATION OF GOVERNMENTS (MAG) TYPE I OR TYPE III, EXCEPT THAT 95 % COMPACTION SHALL BE REQUIRED FROM ONE FOOT ABOVE TOP OF PIPE TO BOTTOM OF TRENCH. WATER CONSOLIDATION IS NOT PERMITTED.
9. COMPLY WITH MAG UNIFORM STANDARD SPECIFICATIONS AND STANDARD DETAILS UNLESS OTHERWISE NOTED IN PROJECT SPECIFIC SRP DOCUMENTS. MOST STRINGENT REQUIREMENTS SHALL APPLY UNLESS SPECIFICALLY NOTED OTHERWISE IN SRP DOCUMENTS.
10. COMPLY WITH ALL APPLICABLE STATUTES, ORDINANCES AND REGULATIONS INCLUDING BLUE STAKE LAW (A.R.S. SEC. 40-360-21 ET SEQ.).
11. THESE GUIDELINES ARE PROVIDED AS A GENERAL AID TO PLANNING. ACTUAL SRP REQUIREMENTS MAY VARY BASED ON SITE-SPECIFIC CONDITIONS, OPERATIONAL CONSIDERATIONS, ETC.
12. AN SRP LICENSE IS REQUIRED FOR UTILITIES CROSSING/PARALLEL TO SRP IRRIGATION PIPE IN SRP RIGHT-OF-WAY. SRP REQUIRES ENGINEER DESIGNED UTILITY CROSSING/LOCATION AND EXCAVATION PLAN.
13. REQUESTS FOR SRP LICENSES ARE HANDLED ON A CASE-BY-CASE BASIS. CONTACT SRP AT 602-236-2962 REGARDING LICENSES FOR SITES LOCATED NORTH OF THE SALT RIVER AND AT 602-236-5799 REGARDING LICENSES FOR SITES SOUTH OF THE SALT RIVER.
14. NOTIFY SRP INSPECTOR A MINIMUM OF 72 HOURS BEFORE STARTING CONSTRUCTION IN OR AROUND SRP IRRIGATION FACILITIES. AN IRRIGATION OUTAGE AGREEMENT MUST BE COMPLETED BY THE CONTRACTOR IF A DRY-UP OF ANY PART OF THE IRRIGATION SYSTEM WILL BE NECESSARY DURING CONSTRUCTION. ISSUANCE OF A LICENSE DOES NOT PROVIDE FOR A CONSTRUCTION DRY-UP.

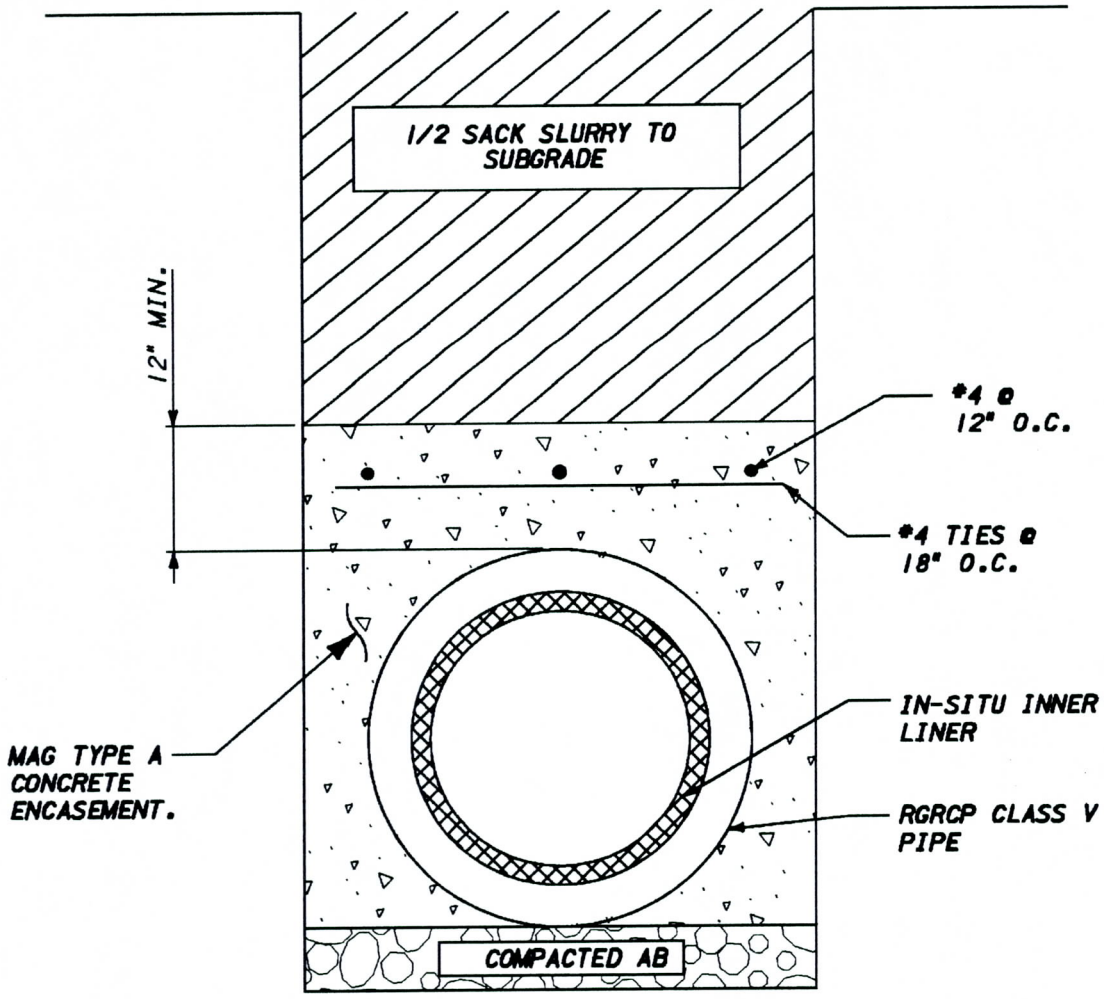

NOTE:

1. SEE FIGURE 3.5 FOR MINIMUM DEPTH CRITERIA.

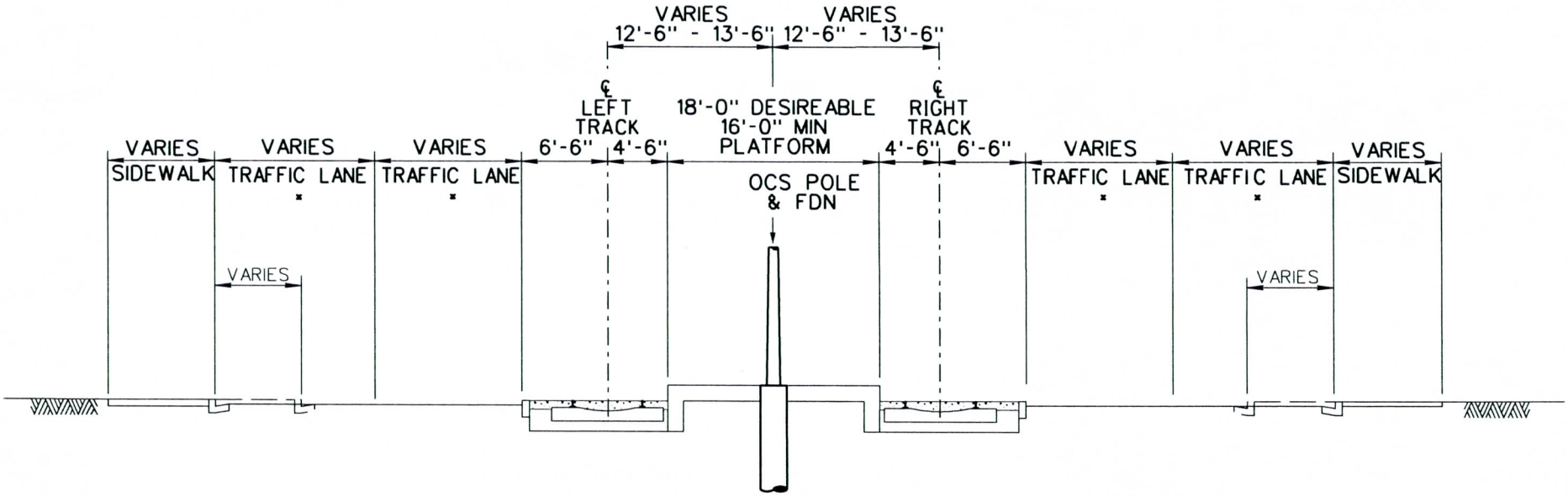

* SEE SECTION 3.6.3 FOR RECOMMENDED LANE WIDTHS.

METRO	VALLEY METRO RAIL, INC.	DESIGN CRITERIA	DATE January, 2007
		TYPICAL FOUR LANE ROADWAY WITH CENTER PLATFORM	FIGURE NO. 3–12

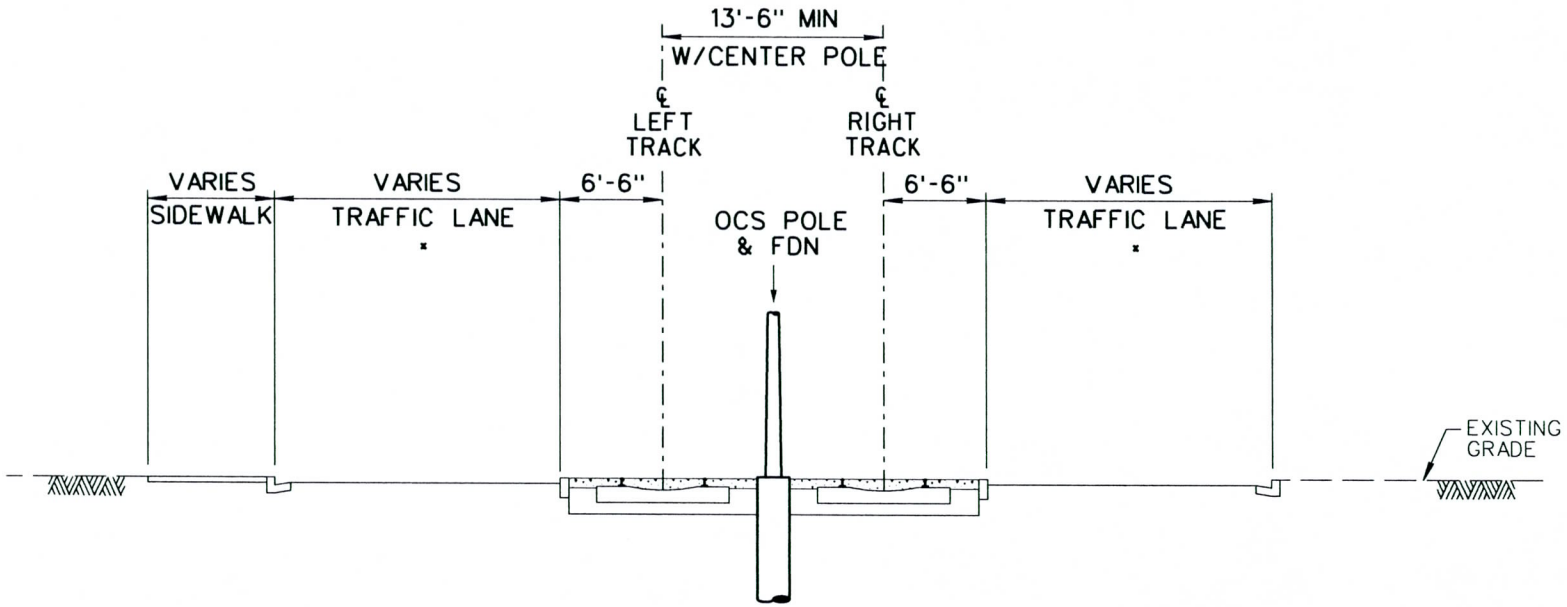

* SEE SECTION 3.6.3 FOR RECOMMENDED LANE WIDTHS.

METRO	VALLEY METRO RAIL, INC.	DESIGN CRITERIA	DATE January, 2007
		TYPICAL TWO LANE ROADWAY	FIGURE NO. 3–13

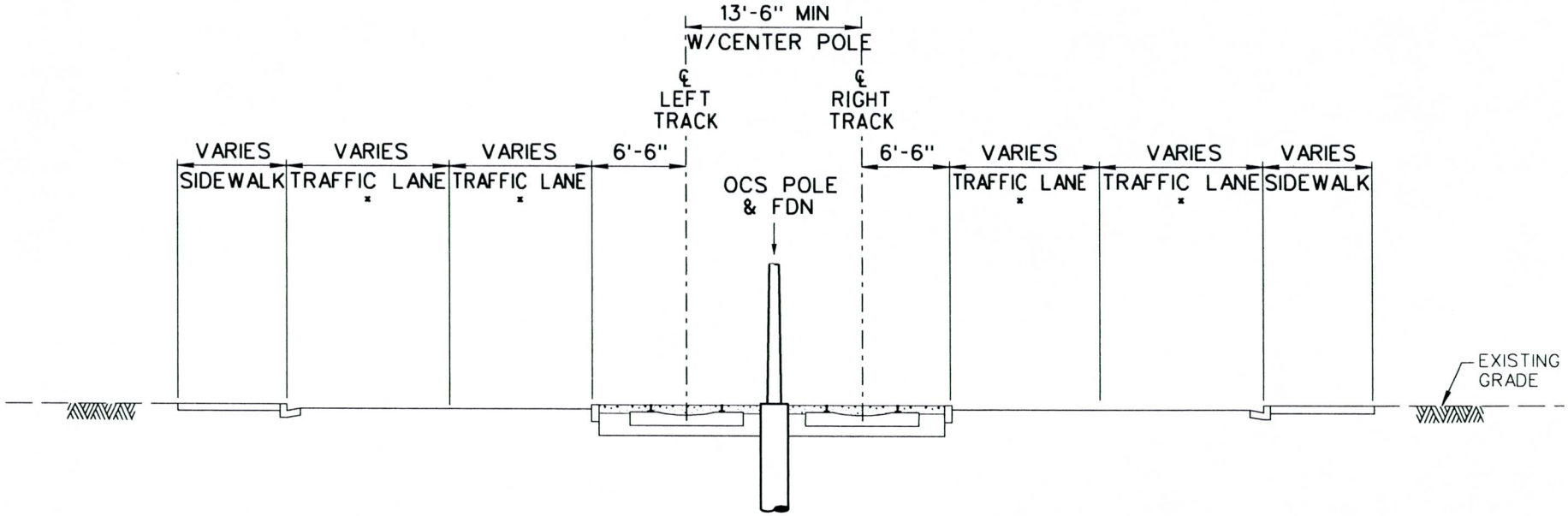

* SEE SECTION 3.6.3 FOR RECOMMENDED LANE WIDTHS.

METRO	VALLEY METRO RAIL, INC.	DESIGN CRITERIA	DATE January, 2007
		TYPICAL FOUR LANE ROADWAY	FIGURE NO. 3–14

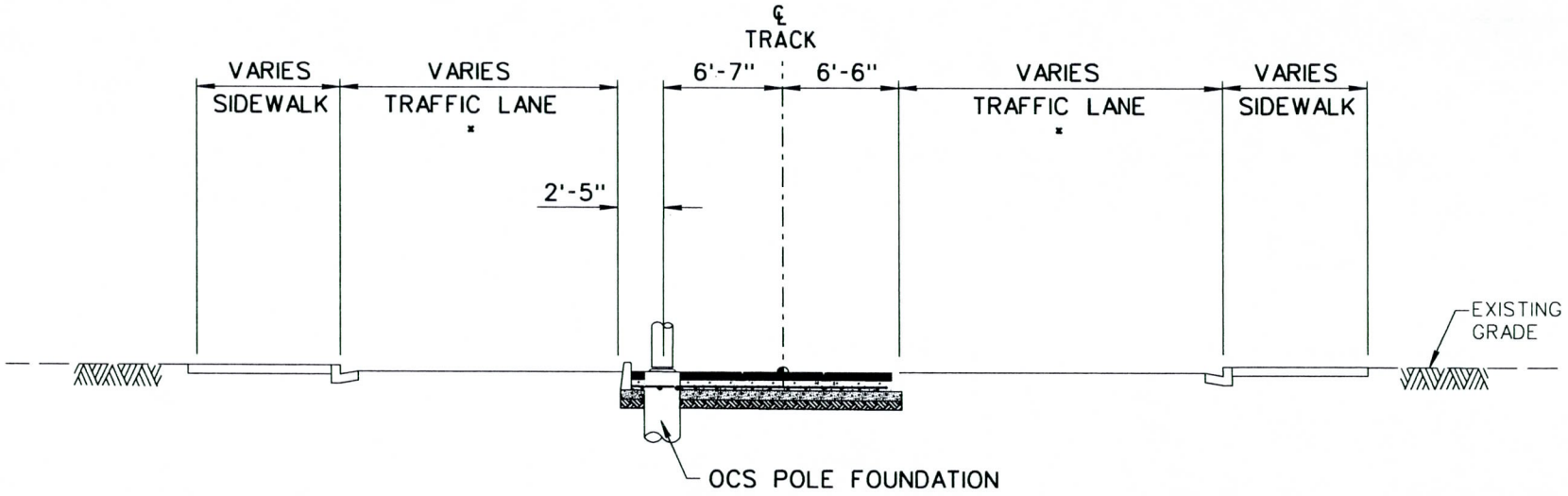

* SEE SECTION 3.6.3 FOR RECOMMENDED LANE WIDTHS.

METRO	VALLEY METRO RAIL, INC.	DESIGN CRITERIA	DATE January, 2007
		TYPICAL TWO LANE ROADWAY SINGLE TRACK	FIGURE NO. 3–15

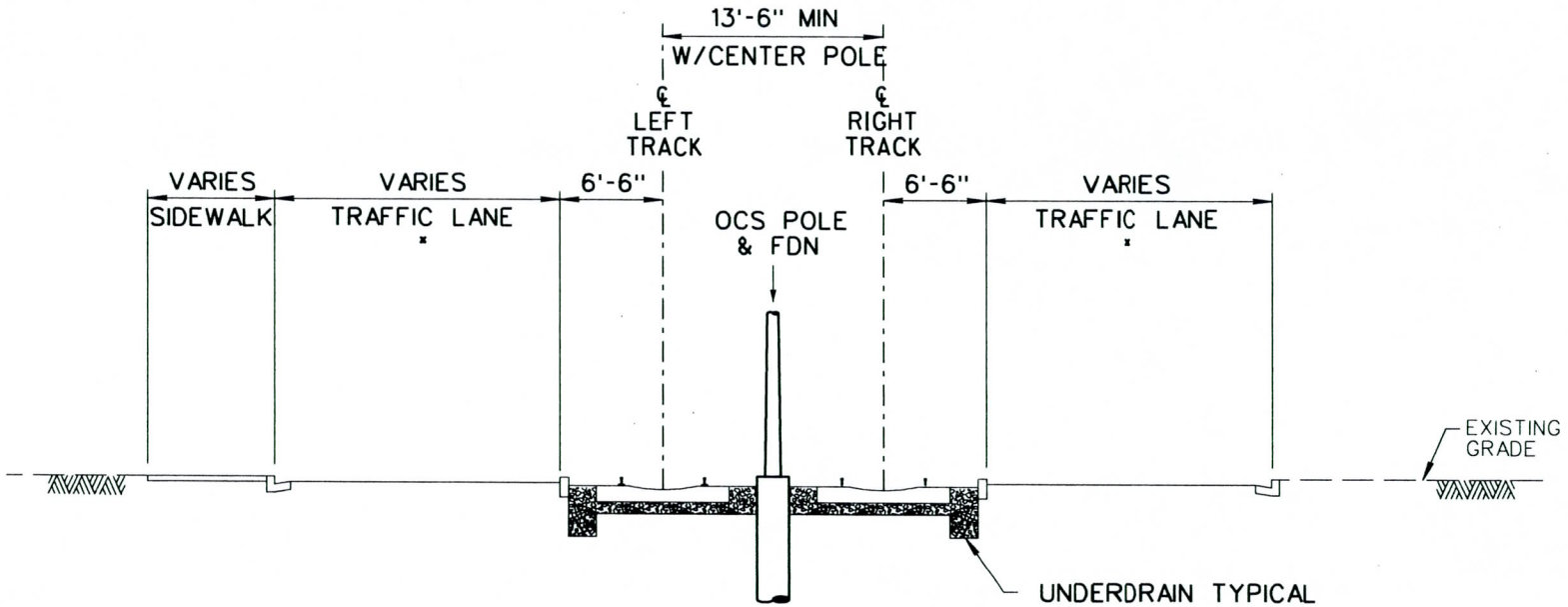

* SEE SECTION 3.6.3 FOR RECOMMENDED LANE WIDTHS.

NOTE: UNDERDRAINS SHALL BE DRAINED
INTO EXISTING STORM PIPE SYSTEMS.

METRO	VALLEY METRO RAIL, INC.	DESIGN CRITERIA	DATE: January, 2007
		TYPICAL IN-STREET BALLAST TRACK	FIGURE NO.: 3-16

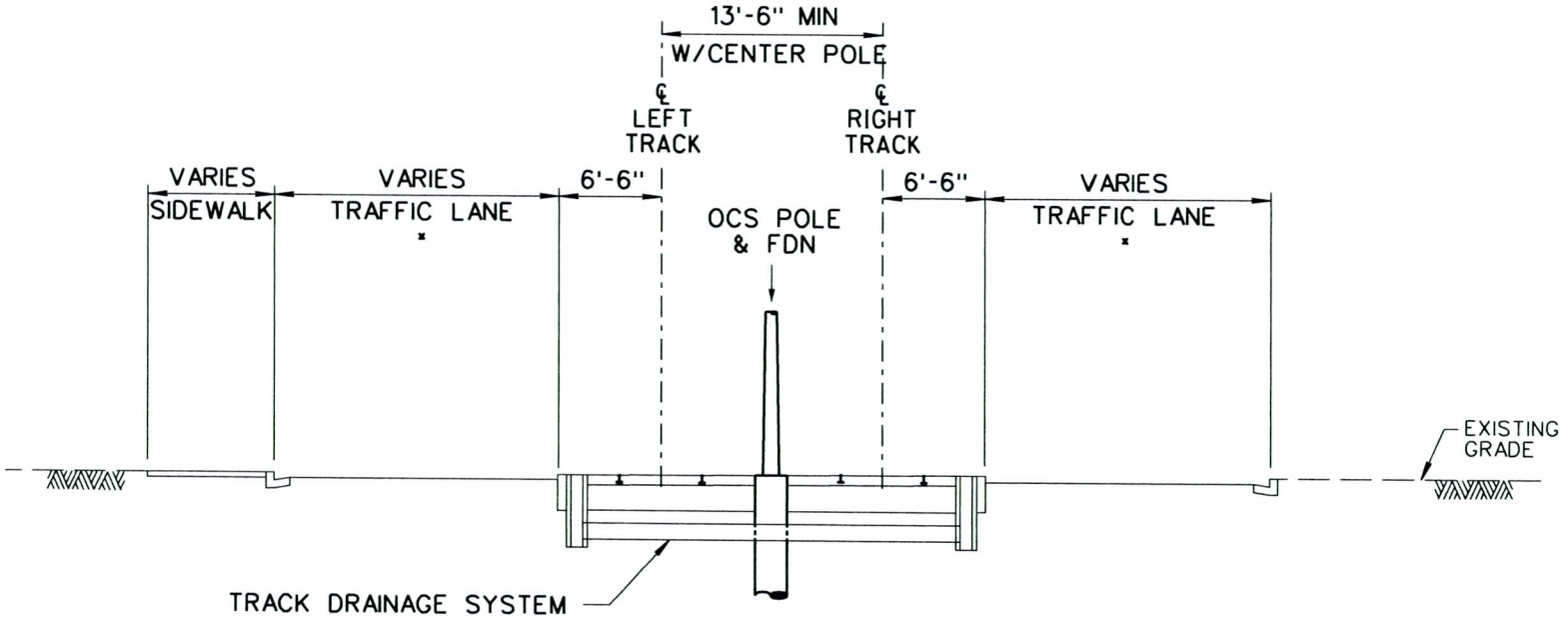

* SEE SECTION 3.6.3 FOR RECOMMENDED LANE WIDTHS.

METRO	VALLEY METRO RAIL, INC.	DESIGN CRITERIA	DATE January, 2007
		TYPICAL EMBEDDED TRACK	FIGURE NO. 3–17

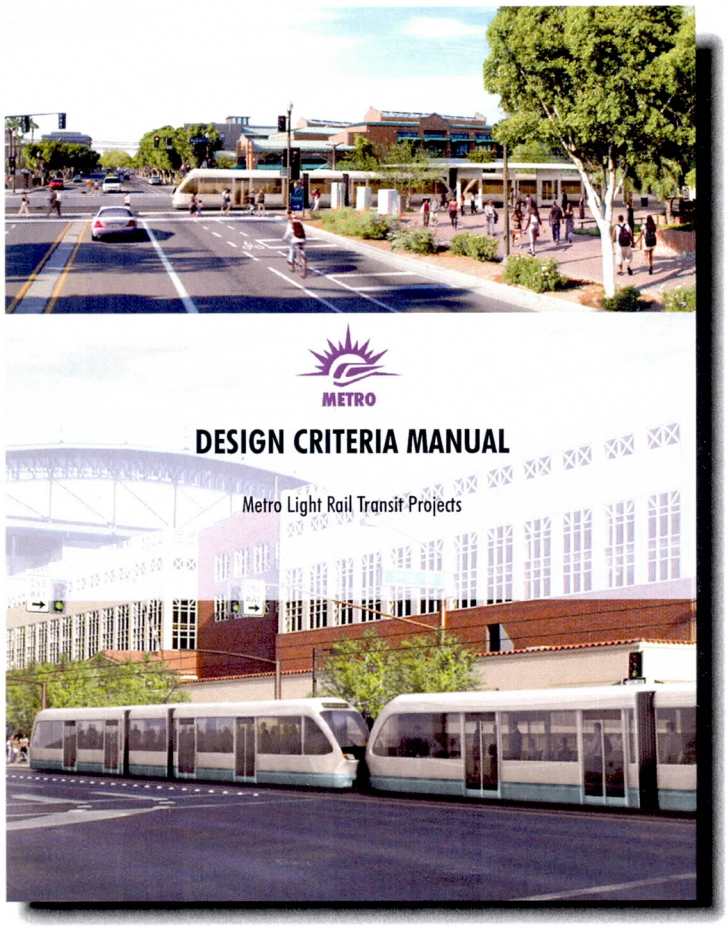

Chapter 4.0

Trackwork

4.0 TRACKWORK

4.1 General

The purpose of this Chapter is to establish the standards and design policies for the detailed engineering, materials and construction standards for trackwork and its interface with other elements on the METRO LRT project. Limits of work covered by this section are one (1) foot below subgrade as defined herein to top of tee or girder rail and the necessary interfaces of trackwork with other elements.

The practices and material described herein shall govern the design of track for the LRT system and includes the required interfacing of trackwork with other elements of the system such as guideway, bridges, track slabs, transition slabs, electrification system, signal system, drainage, etc. Construction plans and specifications shall comply with these criteria, Track Standards and Directive Drawings based on the current requirements of the:

- AREMA - American Railroad Engineering and Maintenance of Way Association
- AAR - Association of American Railroads
- Transit Cooperative Research Program Report No. 57

Criteria for using shared right-of-way with other railroads, shall conform to both FRA and FTA policies.

4.2 Track System

Trackwork systems are composed of a number of elements, each of which has a definite interaction with the elements of the system. Because of this interaction, the design criteria for trackwork must be undertaken as a systems approach with a cause and effects analysis being undertaken on each of the elements. In performing this trackwork design, consideration of allied factors such as safety, stray current, ride comfort, noise, and vibration must not be overlooked. In addition, the relationship of trackwork design to the design of other elements of the system, such as train control and type of vehicle must be recognized and accommodated early in the design process.

Five distinct types of track construction may be encountered in the LRT system: ballasted, embedded track, direct fixation bridge track, embedded bridge track, and shop track, all with either 115 RE rail or girder rail. The design of the trackwork varies to some degree within these types of construction. The design of project trackwork should reflect light rail transit requirements and recommended practices to the fullest extent practicable. The essential elements of trackwork are:

- Roadbed and Ballast
- Embedded
- Embedded Structure
- Direct Fixation Structure

- Aerial Structure or Bridge
- Rail
- Crossties
  - Concrete for mainline track, secondary track, storage track and yard track
  - Other Track Materials (OTM)
- Special Trackwork

4.2.1 Trackwork Classification

The tracks to be constructed under this project can be classified as follows:

- LRT Main Line and Storage Track
- LRT Yard & Secondary Track

Typical trackwork sections of ballasted types, direct fixation and embedded track construction are shown in the Trackwork Standard Drawings (TSD), KS5-4001, KS5-6001, KS5-5001.

4.2.2 Track Construction Types

Trackwork shall be divided into five types of construction, which are:

- Ballasted track
- Embedded track
- Embedded Bridge Track
- Direct Fixation Bridge Track
- Shop track

A number of these types of track except bridge structure and shop track may be classified as guarded track and as special trackwork, as specified elsewhere in these criteria.

Ballasted track as depicted in TSD KS5-4001 shall be the standard for trackwork-constructed at-grade. Ballasted track, except where specified to the contrary in these criteria, shall be constructed with continuous welded rail (CWR).

Direct fixation track shall be the standard used for trackwork constructed:

- On aerial structures
- In exclusive LRT use subways, tunnels, and underpasses
- In at-grade mainline tracks, radii less than 300 feet, or where limited right-of-way width exists and these restricting segments either exceed 350 feet in length or are adjacent to other segments of direct fixation or embedded track. It shall also be used in at-grade sections of less than 350 feet in length, which are bounded on each end by either direct fixation track or embedded track.

Direct fixation track construction in all types of guideway configuration shall be designed to utilize a second pour concrete method of construction as shown in Figures 4-1, 4-2, 4-3 and 4-4 and in detail TSD KS5-6001, KS5-6006.

Details of at grade direct fixation slab track shall be developed during detail design to suit site-specific situations.

There are no restrictions pertaining to the use of CWR in direct fixation track.

Direct fixation aerial structures shall be protected from the large longitudinal forces, which may exist in CWR. Therefore, CWR shall not be terminated on aerial structure. The rail shall extend beyond the bridge structure such that a minimum of 110 rail fastenings or ties are engaged. Any reduction of this number of fasteners shall require special anchorage devices.

Termination as used above means absolute termination. The placement of a turnout or crossover between ends of continuous welded rail does result in absolute termination of the rail. The continuous welded rail is considered terminated by the configuration of the special trackwork switch and frog component wedge shaped fasteners. Special trackwork locations on aerial direct fixation shall be designed independently to suit specific design condition, which may result from anchoring the rail.

Embedded track as depicted in TSD KS5-5001 shall be the standard for trackwork constructed in central business district and paved streets. There are no restrictions pertaining to the use of continuous welded rail in embedded track. A typical bridge track section is indicated in TSD KS5-6001.

Bridge track shall be designed to suit the restricted structure depths and consider conditions of CWR rail over the structure. The in depth design shall be finalized after the preliminary design is undertaken at each structure site.

Shop trackwork shall be CWR installed within the limits of the maintenance shop building and the perimeter apron extensions located at entry and exit doors. Except in pit areas, installation is similar to the embedded trackwork. In pit areas, welded 115 RE rail shall be base welded to the steel girder support installed longitudinally beneath the rail.

4.2.3 Transition Slabs

A transition slab shall be provided at all track structure interface of differing track modulus. Transition slabs as shown on the Trackwork Standard Drawings shall be installed at interfaces between ballasted track and:

- direct fixation track,
- embedded track,
- except at the shop track apron areas.

The crosstie spacing shall be adjusted to account for the difference in track modulus between the more rigid track and the adjoining ballasted track. The minimum ballast depth above a transition slab measured from bottom of tie, shall be 12 inches.

4.3 Track Gauge and Wheel Gauge

4.3.1 Track Gauge

Track gauge shall be the standard gauge of 4 feet 8-1/2 inches, measured between the inner (gauge) sides of the heads of the rails at a distance of 5/8 inch below the top of rails. Wider gauges shall be used in some curves, depending upon the radius. Detailed criteria for gauge widening shall be established once details of the LRV wheel profile, wheel gauge, wheelbase, axle spacing, and wheel diameter have been established. Until then, track gauge criteria shall be as follows:

a. Tangent track and curves with radii equal to or greater than 125 feet – gauge: 4 feet 8-1/2 inches

b. Curves with radii less than 125 feet – gauge: 4 feet 8-5/8 inches

Gauge widening shall be at a transition rate of not more than 1/8 inch in a distance of 20 feet. Full gauge widening shall be accomplished on the tangent in approach to the point of curve and removed following the point of tangent in simple non-spiral transition curves. In spiral transition curves, gauge widening shall be applied and removed within the length of the spirals. If adjacent curves, both requiring widening are too close together to allow run out, the widened gauge shall be maintained between the curves.

Gauge through guardrails in special trackwork shall conform to wheel gauge and wheel flange width dimensions. Flangeway dimensions for sharper curve radii shall be developed using the Nytram Diagrams during design utilizing data concerning the actual wheel contour and diameter and truck parameters employed on the light rail vehicles.

4.3.2 Wheel Profile and Gauge

Since the LRT will not share running track with railroad freight operations, the wheels shall generally conform to the standard transit wheel, configuration as shown in TSD KS5-2010. State of the art "worn wheel" design which better conforms to the natural head radius of the 115 RE rail section shall be used for LRT vehicle wheels but this shall not affect critical track dimensions such as guard check gauge. Back-to-back gauge on all rail equipment wheel sets, including hyrail vehicles, shall conform to transit standards. When establishing the transit wheel gauge, the use of girder groove rail will be considered.

4.4 Track Construction Tolerances

Light Rail Transit track construction tolerances are determined by taking into consideration safety, speed of operation, and the type of service to be provided. The track construction tolerances shall be developed and listed in the Standard Specifications and Trackwork Standard Drawings.

4.5 Track Components

4.5.1 Ballast-Subballast-Subgrade

Proper design of the roadbed and ballasted elements of the track structure is very important to provide an adequate foundation and to minimize the maintenance requirements of the transit system. Roadbed and ballast sections shall be designed and analyzed to minimize the overall right-of-way width required while providing a uniform, well-drained foundation for the track structure. Rail support track modulus shall be designed in accordance with the AREMA Manual, Chapter 16.

The track structure includes the subgrade, sub-ballast, crossties and rail with associated other track materials.

In designated LRT right-of-way, access to the track shall be provided for maintenance and emergency work. This requires provision for highway vehicles, and for vehicles equipped with flanged wheels to drive onto the track at strategic locations. Where practicable, a service road on the ROW and paralleling the track shall be provided with adequate turn-around facilities where the road is not continuous.

Subgrade: The subgrade is the finished surface of the roadbed below the sub-ballast, supporting the loads transmitted through the rails, crossties, ballast and sub ballast. The subgrade shall be analyzed to determine whether it has both uniform stability and the strength to carry the track loadings expected. AREMA recommends that, for most soils, pressure on subgrade be lower than 25 psi to maintain subgrade integrity. Uniformity is important because it is differential settlement rather than total settlement that leads to unsatisfactory track alignment. The use of geotextile or geogrids between the subgrade and subballast can be advantageous under some conditions.

Existing ballasted tracks - Existing track bed should be evaluated prior to civil and track design to determine if subgrade conditions are adequate for reuse or if remedial measures will be necessary. In some cases, subballast and ballast depths may be reduced based on the existing conditions.

In locations where the LRT track will be constructed upon existing ballast from an abandoned track, the existing ballast may eliminate the need for subballast. In these locations, additional aggregate shall be mixed with existing ballast to improve the gradation and bring the ballast to the specified subballast quality.

***Subballast*:** The subballast for all tracks shall consist of a uniform layer placed and compacted over the entire width of the subgrade following the profile and cross section thereof. The minimum depth of subballast measured from the top of the subgrade shall be 8 inches in new track embankments. Additional depth shall be used when necessary to decrease subgrade pressure. Where widened shoulder service roads are provided, the full depth of the subballast shall be extended across the full width of the service road. Subballast shall be crushed stone gradation in accordance with ASTM C29, C136, and D15 and site-specific additional design requirements.

Ballast: Ballast is a selected crushed and graded hard aggregate material placed upon the subballast for providing support for the rail and crossties and distribution of the track loadings to the subgrade. AREMA states that ballast (plus sub-ballast) must be of sufficient depth to distribute pressure between tie and subgrade. The ballast must sustain and transmit static and dynamic loads in three directions (transverse, vertical and longitudinal) and distribute those loads uniformly over the subgrade. The prime functions of the ballast is to drain the track system, distribute the rail vehicle loads to the subgrade, and hold the track in proper alignment, cross level and grade. It can also cushion the ride and isolate from ground any vibrations, which originate at the wheel-rail interface. It also permits relatively easy adjustment of the track alignment. The gradation must provide the means to develop the stability and density requirements for the ballast section and provide the void space necessary to allow proper run-off of precipitation.

The minimum depth ballast measured from the top of subballast to the underside of track tie shall be 10 inches. In curved track, the minimum depth of ballast shall be 10 inches measured under the low rail or the inside rail. In dual track sections, the inside track establishes the top of ballast.

Ballast gradations smaller than AREMA size No. 4 shall not be used on tracks constructed with concrete crossties. Ballast gradation conforming to AREMA size No. 3 shall be used in main tracks with concrete crossties. Ballast for concrete crossties must be limited to either crushed granites or traprocks. AREMA size No. 4 shall be used in yards and other non-main line tracks using timber crossties. For simplicity and uniformity, the same material quality specification, except for gradation, should be considered for all ballast installations.

4.5.2 Crossties and Switch Ties

Due to specific requirements for both timber crossties and concrete crossties, this portion of the design criteria is provided to conform to the specific type of track tie selected.

Concrete Crossties: Monoblock concrete crossties are the preferred concrete tie system for ballasted mainline, storage tracks, and yard tracks. Procurement specifications for them shall provide design requirements for fastener inserts for rail, restraining rail and tie reinforcement. Rail pads shall be designed to prevent excessive flexure and fatigue of the rail hold down element and rail seat abrasion, while still providing the desired noise attenuation and electrical resistivity. Monoblock concrete crossties with lateral resistance patterns on the sides of the tie are required. The track construction specifications shall include emphasis on construction methods for laying concrete crossties on an initial ballast layer that shall prevent center binding and other problems, which could cause cracking during subsequent construction operations.

Standard concrete crossties shall be required for:

- Main Line, storage, and yard track consisting of two running rails
- Main Line track consisting of two running rails and either restraining rail or emergency guardrail or both.

Crossties, which shall support emergency guardrails or restraining rails, shall include insulated steel threaded inserts to which these items can be attached. The special concrete crossties shall be designed to accommodate additional protection rails within a single tie design. Refer to the Track Standard Drawings.

Switch Ties: Special trackwork support shall be on concrete special trackwork ties. Refer to the Trackwork Standard drawings for typical layouts.

Crosstie Spacing: Tie spacing shall be set to provide sufficient lateral, longitudinal, and vertical restraint for each type of track. Crossties shall have the following minimum longitudinal spacing:

- Main line, storage and yard track consisting of concrete crossties with spring fasteners:
- 30-inch centers for tangent tracks and track with curves above 750 foot radius
- 27-inch centers for track with reduced tight curvature below 750-foot radius.
- Special trackwork switch tie spacing shall be in accordance to specified Trackwork Standard Drawings.

4.5.3 Tee Rail and Girder Groove Rail

New 115 RE section rail shall be used for all mainline-ballasted and direct fixation track on the LRT system.

All new tee rails shall conform to the current AREMA Chapter 4.

Rail for embedded track may be Ri53N or Ri52N girder rail section manufactured in accordance with prevailing UTC specifications and ASTM A2 as applicable. This selection is subject to modifications if the standard flangeway of the girder guardrail is not wide enough for the selected wheel contour when used in tight radius curves.

High strength rail shall be used at station areas, other areas of frequent starting and stopping, on grades of five percent or greater, curves with radius equal to or less than 2000 feet, and in areas where high wear rates or internal rail stresses are anticipated. Seldom-used secondary, emergency, or storage tracks with sharp curvatures and grades shall not be provided with high-strength rail. High strength rail shall also be used throughout all special trackwork.

Where high strength rail is used in curves, it shall extend into tangent track on the approach and departure ends of the curve a minimum distance of 20 feet but not more than 35 feet. When two sections of high strength rail are close together and conformance to the above criterion would result in an intermediate segment of standard control-cooled rail less than 156 (2 x 78) feet in length, the high strength rail shall be made continuous through all three segments.

Prior to LRT mainline tracks being opened for revenue service, their running rails should be contour surface ground to remove surface imperfections and mill scale, optimize the rail wheel interface contact area, and facilitate traction power return and signal shunting. Requirements for grinding rail in secondary LRT tracks shall be evaluated during design. Grinding of rail in embedded track shall be evaluated separately and provisions for grinding the railhead without damaging the surrounding embedment surface must be considered. Rail grinding patterns shall be designed in conjunction with consideration of alternative LRV wheel contours.

All running rails shall be continuously flash butt welded into the longest length feasible for installation. Thermite (field) welds shall be used to join the lengths of flash butt-welded rail. Embedded track within Central Business Districts may be considered for total field weld installation. Where insulated joints are required in CWR, they shall be epoxy bonded to withstand the longitudinal forces.

Rails in short radius curves shall be precurved using standard roller bending method. Specifications for horizontally shop-curved rail shall require that the rail base lay flat after bending. Rail shall be precurved under the following circumstances:

- Tee rail in CWR ballasted track horizontal curves of radius less than 300-foot.
- Tee rail in either embedded or direct fixation track or bolted yard curves of radius equal to 500 feet or less.
- Tee rails with vertical curve radius sharper than 1000 feet
- Girder rails with horizontal radius less than 750 feet or vertical curvature with a radius sharper than 1500 feet.

4.5.4 Restraining Guardrail for Curved Track

Tracks having a centerline radius of less than or equal to 750 feet and other specific locations where restraining rail would prove to be beneficial shall have restraining rail added to the inside running rail. All track having a centerline radius less than or equal to 100 feet may require both running rails guarded. Such locations shall be analyzed and recommendations made to METRO.

Restraining rail design, as shown in TSD KS5-8038, shall consist of 132 RE rail fastened to the 115 RE running rail and in turn fastened to either the concrete crossties or the direct fixation track second pour plinth as applicable. Where restraining rail is required within a special trackwork layout, it may be fabricated from either the vertically mounted 132 RE rail or another fabricator's design approved by METRO.

Embedded track, which requires guarding, shall use Ri53N or Ri52N girder groove rail with special raised lip (tram). Consideration shall be given during design to specific track gauge and flangeway requirements that will be associated with the final selected LRV wheel profile and diameter.

The restraining rail assembly or girder groove rail shall extend beyond each end of a guarded simple curve (no spirals) a minimum distance of 18 feet. Where the track geometrics include a spiral, the curve guarding shall generally extend to and beyond the beginning and ending points of the spiral.

4.5.5 Special Trackwork Plates for Timber Switch Ties

Ballasted special trackwork for mainline shall use resilient clips and insulated plates to provide stray current protection in accordance with the criteria determined by the traction power and corrosion control designers.

Ballasted special trackwork for maintenance yard track shall be of similar design to the resilient clip insulated plate design used on the main line.

Standard concrete switch ties with resilient clips and insulating shims between the clip and rail foot are the preferred standard. Only if proven economically non viable will timber switch ties be considered by METRO.

4.5.6 Direct Fixation Rail Fasteners

Direct fixation rail fasteners to the foot print design in Figure 4-4 for aerial and fixation at-grade slab track shall provide the required lateral and longitudinal restraint for continuous welded rail and the electrical insulation required for the negative return current and the proper operation of track signal circuits. Direct fixation rail fasteners shall have the following longitudinal spacing:

Trackwork	Spacing
Tangent or curved track with radius greater than 500 feet	30-inch centers
Curved track with radius 500 feet or less and greater than 300 feet	27-inch centers
Curved track with radius 300 feet or less	24-inch centers

Direct fixation fasteners shall be randomly positioned, plus or minus 3 inches, for tangent and curved track with 30-inch centers to combat vehicle/rail harmonies, which could lead to corrugation.

Direct fixation rail fasteners shall provide a longitudinal restraint force of 2,750 pounds per fastener and restrain a broken rail gap to less than 2 inches wide.

Direct fixation rail fasteners will have vertical stiffness value depending on the application and location of the fastener. In standard running track locations where noise and vibration and other criteria is not an issue, the typical vertical stiffness range will be between 100,000 pounds per inch and 140,000 pounds per inch. The value of the fastener stiffness will be confirmed by METRO.

4.5.7 Direct Fixation Steel Shims

Steel shims are used as required on direct fixation to raise the rail to its design vertical alignment. Shims are typically produced in ranges of thicknesses from 1/16 inch to 1/2 inch to provide flexibility in achieving the final design elevation.

Steel shims should be hot dipped galvanized in accordance with the latest appropriate codes.

The shape, size and configuration of the steel shims shall conform to the outline of the direct fixation fasteners and must be able to be removed or added without dismantling the DF Fastener from the concrete surface.

4.5.8 Direct Fixation Special Trackwork

Rail fasteners for use in direct fixation special trackwork shall be of a design compatible with the standard fastener used in conventional special trackwork on switch ties and shall be spaced as shown on the Trackwork Standard Drawings.

4.5.9 Insulated Joint Bars

Continuous Welded Rail – Insulated joint bars of the epoxy bonded type shall be used in CWR wherever it is necessary to electrically isolated contiguous rails from each other in order to comply with track signaling or traction power criteria. Track bolts shall be equipped with self-locking nuts. Insulated joint bars shall be the "D" type section providing clearance for modified spring clip type rail fastenings.

Jointed Rail – Wherever insulated joint bars are required in yard track constructed with jointed rail, they shall be either polyurethane encapsulated bolted insulated joint bars.

All insulated joints should be located as suspended joints to obviate the need for insulated tie plates. Special modified spring clips may be required at insulated joint locations.

4.5.10 Joint Bars

The use of bolted joints shall be minimized during design except in those locations where the use of jointed rail is specified. Joint bars shall be 36-inch six-hole bars conforming to AREMA standards punching patterns. Track bolts; nuts and lock washers shall conform to AREMA standards.

4.5.11 Compromise Joints (Transition Rails)

Compromise joints shall be used to connect 115 RE rails to Girder Groove Rail. Thermite (field) welds shall be used for permanent connections between rail sections. Compromise joints, welds or rails shall not be located within special trackwork units or within 30 feet of the toe end of any turnout stock rail.

4.5.12 Derails

Either sliding or split switch point derails shall be used to prevent out-of-control transit vehicles from fouling adjoining or adjacent tracks. Derails should be installed on the descending grade end of yard and secondary track normally used for storage of unattended light rail vehicles if this track is directly connected to the main line track and if its prevailing grade is descending toward the main line track. Derails shall be placed at the clearance point (centers to be determined) of all tracks, which connect to a LRT main track. Derails shall be used at other track locations where they would be likely to prevent to minimize injury to passengers and personnel, and/or damage to equipment.

Derail shall be located to derail equipment in the direction away from the main track. Refer to Trackwork Standard Drawings for typical locations of derails.

4.5.13 Miscellaneous Track Appurtenances

End of Mainline Track Arrestors or End Stops

Friction type end stops shall be used to absorb the kinetic energy of stopping a vehicle by sliding along the end of track rail. Friction stops can be designed to cover a wide range of energy absorption situations from single vehicle to multi-vehicle train with the reasonable minimum of impact and damage.

Bumping Post: Track bumping post shall be designated to engage the anticlimber or the LRT vehicle. They shall be installed at the ends of all stub-end yard or maintenance tracks.

Embedded Track Drains: The flangeways provided for the LRT vehicle wheels in embedded track form natural conduits for storm water runoff. In order to prevent the formation of ponds at low points of sag vertical curves, track drains of the type shown on the Trackwork Standard Drawings shall be used. Such drains shall also be placed at appropriate intervals along grades to prevent the flangeways from overflowing. A track drain shall be placed on the downgrade end of embedded track segments, which adjoin ballasted or direct fixation track in order to minimize fouling of track ballast and accumulation of silt and debris upon track slabs. Track drains shall be placed on the upgrade side of embedded special trackwork to minimize the amount of water entering the switch areas. Other locations where the use of track drains may be appropriate shall be reviewed during final design.

4.6 Special Trackwork

The term "special trackwork" designates the trackwork units necessary where tracks converge, diverge, or cross one another. Special trackwork includes turnouts, single and double crossovers with diamond crossings. All ballasted special trackwork design shall be based on the AREMA standards to meet the special conditions of the LRT system. Embedded special trackwork, which conforms to European standards, may be considered depending on the type of special trackwork required and specialization of the item.

Special trackwork on the LRT system may consist of ballasted, direct fixation and embedded trackwork. Ballasted special trackwork shall be constructed on concrete switch ties as stated previously. Embedded special trackwork shall consist of tongue switch and mate turnouts and track crossings. Direct fixation turnouts shall be similar to ballasted track turnouts except that the rails, switches and frogs shall be fastened to a second pour concrete plinth on slab using insulated resilient rail fasteners.

- Ballasted Special Trackwork

  All special trackwork shall be designed and constructed in strict accordance with METRO's Trackwork Standard and Directive Drawings. Turnouts and crossovers shall be located in ballasted track wherever possible.

- Direct Fixation Special Trackwork

  Direct fixation special trackwork shall be similar design to ballasted special trackwork except direct fixation fasteners shall be applied for concrete plinth installation.

- Embedded Special Trackwork

  Embedded special trackwork shall be designed to suit the restricted street configurations. Standard components shall be used whenever feasible. The designer shall look for opportunities to make multiple use of custom embedded trackwork components, such as curved frogs of particular radius.

Embedded turnouts may vary in design sizes from conventional designs. Generally, embedded turnouts include curved switches and frogs and are designated by the turnout radius (100 feet, 25 meters, etc). The straight number 8, 6, and 4 frogs may be used in the LRT embedded special trackwork where appropriate.

Embedded switches shall be the tongue switch and mate variety generally in accordance with the designs illustrated in the AREMA "Portfolio of Trackwork Plans". At a minimum, mates will be modified from AREMA design in order to reduce point batter by either reducing the flangeway width or by providing flange-bearing design, or both as needed.

Embedded frogs shall be of cast manganese or monoblock steel section with welded toe and heel arms. To both ease frog point batter and provide a consistent running surface at frogs and track crossings consideration shall be given to flange bearing design. Crossing frogs shall be designed in a similar manner.

Special trackwork shall be located to reduce the exposure of pedestrians to the operating or moveable mechanisms and to minimize requirements for special catenary and signal structures. Special trackwork shall not be located in areas designated for pedestrian crosswalks. Where this objective proves to be difficult to achieve, crosswalks may be located between the switch and the frog provided that pedestrians are nowhere exposed to a metallic walking surface or flangeway wider than would occur if the pedestrian crossing were located away from the special trackwork unit.

The limits of any trackwork design or construction contract shall not be located within a special trackwork unit or curved track.

Special trackwork shall be located in tangent track, unless otherwise approved by the Authority. There shall be no actual superelevation (E_a) in any special trackwork units. All special trackwork shall be located on tangent vertical profile grades.

The minimum length of horizontal tangent track between any point of switch and the end of a station platform shall be per Section 2.2.1 Horizontal Alignment - Station stops.

The minimum length between point of switch and point of switch; heel of frog and point of switch; point of switch and point of switch (Opposite hand turnout); or heel of frog to point of switch (opposite Hand through) shall be as shown in Figures 4-5 to 4-8.

Tangent distances between point of intersection of turnout (PITO) and the beginning of horizontal or vertical curve shall be in accordance with directive drawings and were developed based on the following criteria:

- Minimum distances are obtained by locating the beginning of horizontal or vertical curves at a point that is 35 feet beyond the turnout from point of switch or point of frog.

- Desirable distances are obtained by locating the beginning of horizontal or vertical curves ahead of a turnout at a point that is 45 feet (approximately the length of one articulated LRV car body section) from the point of switch. Curves following a turnout are set beyond the last long switch tie.
- Absolute minimum distances are obtained by locating the beginning of horizontal or vertical curves 20 feet ahead of the point of switch. Non-superelevated horizontals curves may begin beyond the farthest end of the joint bars connecting the running rail to the heel of the frog. Vertical curves and superelevated horizontal curves following a turnout shall not begin until after the last long switch tie.

Turnouts are set to provide connections to branch lines, storage tracks, and sidetracks and to merge two main tracks into a single track at the end of a double track segment. Crossovers consist of two turnouts located to allow traffic to cross over from one track to another, both tracks usually being in parallel. Where crossovers are required, one right hand and the other left hand, it is desirable that they be located as two back-to-back single crossovers. If this is not possible, or if extraordinary site conditions make it more economical, a double crossover may be used. The size of turnout or crossover selected depends upon its purpose, desired design speeds and local geometrical constraints. The normal and maximum operating speeds through the various turnouts designated for use on the LRT system are shown in Table 4-1.

Table 4-1. Turnout Operating Speeds

Turnout	Maximum (E_U=3")	Normal (E_U=1-1/2")
5 EQL	20	18
6	14	10
8	19	15
10	24	20
8 EQL	27	20
10 EQL	34	30

For design purposes, the normal operating speed shall be used. The usual application of turnouts is given Table 4-2.
E_U = Unbalanced Superelevation

Table 4-2 Application of Turnouts
Turnout – Ballast/direct fixation

Turnout Size (Frog No.)	Curved Switch Length	Service
5	13'-0"	Equilateral Pocket Track to Match No. 10 Turnouts Off Main Line
6 (1)	13'-0"	LRT Yard Tracks only
8 (1)	19'-6"	Minimum mainline track turnout
		Emergency crossovers, etc. also in yard leads
10	19'-6"	Preferred mainline track turnout, Mainline Connection to Yard, Permanent Turn backs, Pocket Tracks and Crossovers
4 - 7	17'-0"	Embedded Street Turnouts

1) Where No. 6 and 8 turnouts are used in ballasted mainline track, and will be frequently used on the diverging side, consideration shall be given to the use of a fully guarded design. Such fully guarded turnouts should be considered at any location where a low number turnout must be used due to geometric constraints. Such locations include the entry to the system's Maintenance and Storage Facility yard from the main line, frequently used and critical purpose turnouts in the yard, and turnback tracks or wye tracks.
2) End of double track turnouts should be placed as equilateral if geometry permits. If a lateral turnout is used at the end of double track location, the straight side should be given to the facing point movement. Junction turnouts should be placed as equilateral if the traffic will be about equal on both branches and geometry permits. If not, the mainline side should favor the facing point-traveled branch.

As all special trackwork is a source of noise and vibration, its proposed location shall be determined with due consideration given to those factors.

All joints in LRT mainline track special trackwork shall be welded except at insulated joint locations. LRT yard and secondary track special trackwork shall have bolted joints except the main lead turnouts to the Maintenance Facility Yard and Storage Track yard areas.

Where circumstances suggest that turnouts of non-standard design be considered, they shall conform to the criteria above, and shall be used only upon the approval of METRO.

All LRT ballasted and direct fixation special trackwork shall be designed to match 115 RE rail. Embedded turnouts shall be designed to match adjacent rail.

Elaborate special trackwork such as slip switches, moveable point crossings, or lap turnouts may be considered in the design layout only with the approval of METRO.

4.6.1 Switch Machines – Power Operated and Manual

Switches may be operated by power operated switch and lock movements; electrically locked hand-operated machines; or hand-operated trailable switch stands, depending on the location and purpose of the switch. Selection of a switch operating device and the space requirements for such devices shall be coordinated with design of the train control system and Chapter 11, Signaling.

4.7 At – Grade Highway Crossings

Due to track geometry, possible curves, superelevation and concern for stray current, the design of at-grade crossings in mainline track shall be of the embedded track design. The design of at-grade crossings of LRT yard and secondary track shall be based upon the use of the conventional concrete railroad grade crossing materials, that could include a concrete panel over timber tie installation. Aprons at the Maintenance Facility shall be embedded track design matching the interior building standards.

4.8 Traction Power – Impact on Track

The relationship of trackwork design to the design of other elements of the system, such as train control, electrification, civil-structural works, drainage, and the Light Rail Vehicle (LRV) must be included in the total design process. The design selected for these other elements will affect the design parameters for trackwork so its vital for the trackwork designer to know how the other elements will affect the design of the track structure.

The purpose of the power distribution system is to conduct current from the substation to the vehicle pantograph. The positive side of the distribution system includes all positive power cable, overhead catenary, and various disconnecting devices, all located outside of the substation. The track system forms the return side of this circuit back to the substation. The negative return system usually consists of both running rails. All rail joints and electrical track connections must be electrically "bonded" through an exothermic process (Cadweld or Thermoweld), with the exception of any temporary connections. In special designs when required the negative return is supplemented by means of negative paralleling cables. See Chapter 10 for details on Traction Power requirements.

In some segments, one running rail shall be used for signals and the other for the traction power negative return. Bolted joints in negative return rail segments shall be electrically bonded across the joint bars with high conductivity bonds through an exothermic process (Cadweld or Thermoweld). The negative return rails of parallel tracks should be cross-bonded frequently to equalize the currents that traverse them. In segments that use both running rails for return, all rails of parallel tracks should be crossbonded through an exothermic process (Cadweld or Thermoweld). Crossbonding locations shall be identified to the track designers by the traction power system designer, working in conjunction with the train control system designer. Appropriate measures shall be taken during the design of all types of trackwork, including embedded track and highway grade crossings, to minimize the leakage of stray current from the track structure to the ground. This work shall be consistent with system corrosion control requirements. Embedded track shall be protected as shown in the Trackwork Standard Drawings. Refer to drawings KS5-9020 to KSD-9050. See Chapter 19 for details on Stray Current and Corrosion Control requirements.

4.9 Signaling and Train Control – Impact on Track

Although train control design will not affect the selected trackwork design concept, it can affect specific parts of the design. The prime example of this interrelationship is the need for the location of insulated joints in the running rails to accommodate train control requirements. Such joints are normally required at the extremities of interlockings, within individual turnouts and crossovers, at each end of station platform, and at other locations to be determined by the train control design.

The LRT signaling system may include both track circuits and wayside magnetic loop detector signal systems to suit both ballasted and embedded track zones respectively. Impedance bond installation areas and requirements must be coordinated with track structure. Insulated joints at limits of track circuits are to be opposite each other (within 4 feet 6 inches) to facilitate underground ducting, traction crossbonding and to minimize wheel noise.

4.10 Rail Grinding

Prior to revenue service all newly installed mainline rail shall be contour surface ground using a production type rail grinder. Rail grinding is required to:

- Remove mill scale, rust, surface imperfections and railhead irregularities
- Mitigate the onset of rail corrugation
- Optimize ride quality
- Reduce airborne noise and vibration
- Extend rail and wheel life
- Facilitate traction power return and signal shunting

Grinding procedures for rail in embedded track shall not damage the surrounding embedment surface. Refer to section 4.5.3.

4.11 Noise and Vibration Attenuation

Noise along the LRT right-of-way primarily originates from the LRV wheel and rail at the point of contact generating noise and vibration in the LRV, trackwork components, and track support structures.

Trackwork design can have a substantial effect on noise and vibration. Design and selection of trackwork components shall consider the following methods for controlling and/or reducing noise and vibration adjacent to commercial, institutional and residential areas:

- Use of resilient or elastomeric bonded direct fixation fasteners
- Use of resilient rail seat pads for concrete ties
- Use of continuous welded rail (CWR) on mailnline
- Optimization of turnout locations where possible to minimize impact of noise and vibration generated from wheel transfer impact
- Use of special dampening materials such as ballast mats, elastomers for embedded sections, and direct fixation fasteners designed to minimize noise and vibration in sensitive areas
- Rail grinding prior to revenue service
- Use of wayside sound barriers where appropriate

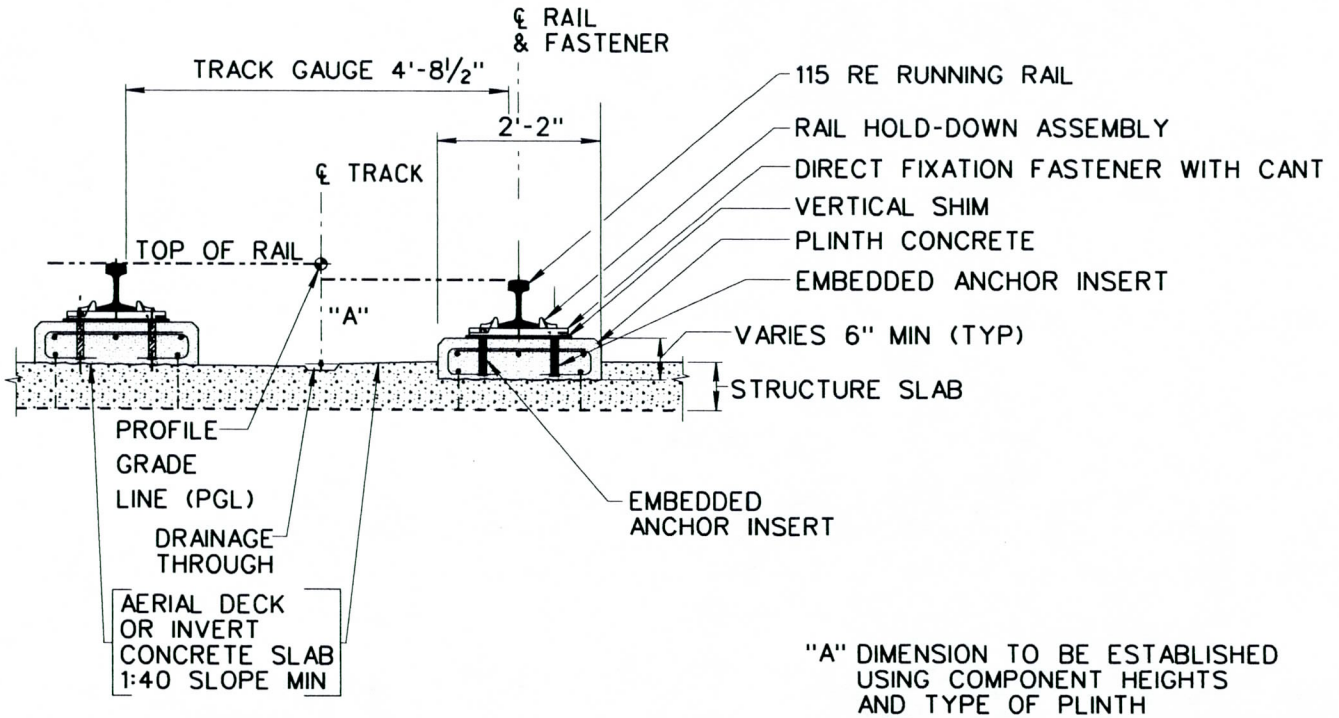

"A" DIMENSION TO BE ESTABLISHED USING COMPONENT HEIGHTS AND TYPE OF PLINTH INSTALLATION AT SURFACE OR RECESSED.

⌖ PGL ELEV AT TOP OF LOW RAIL

METRO	VALLEY METRO RAIL, INC.	DESIGN CRITERIA	DATE January, 2007
		TANGENT DIRECT FIXATION TRACK	FIGURE NO. 4–1

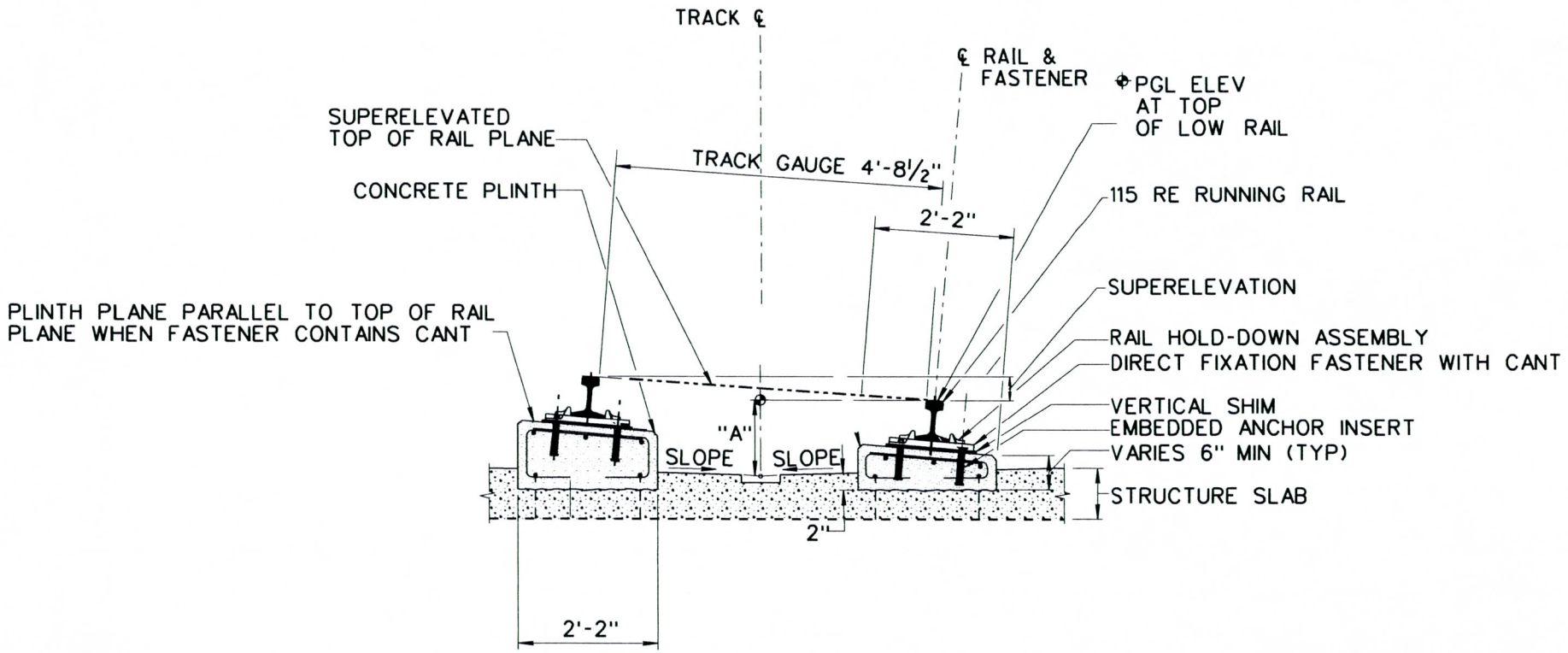

"A" DIMENSION TO BE ESTABLISHED USING COMPONENT HEIGHTS AND TYPE OF PLINTH INSTALLATION AT SURFACE OR RECESSED.

PGL - PROFILE GRADE LINE

METRO	VALLEY METRO RAIL, INC.	DESIGN CRITERIA	DATE January, 2007
		CURVED SUPERELEVATION DIRECT FIXATION TRACK	FIGURE NO. 4–2

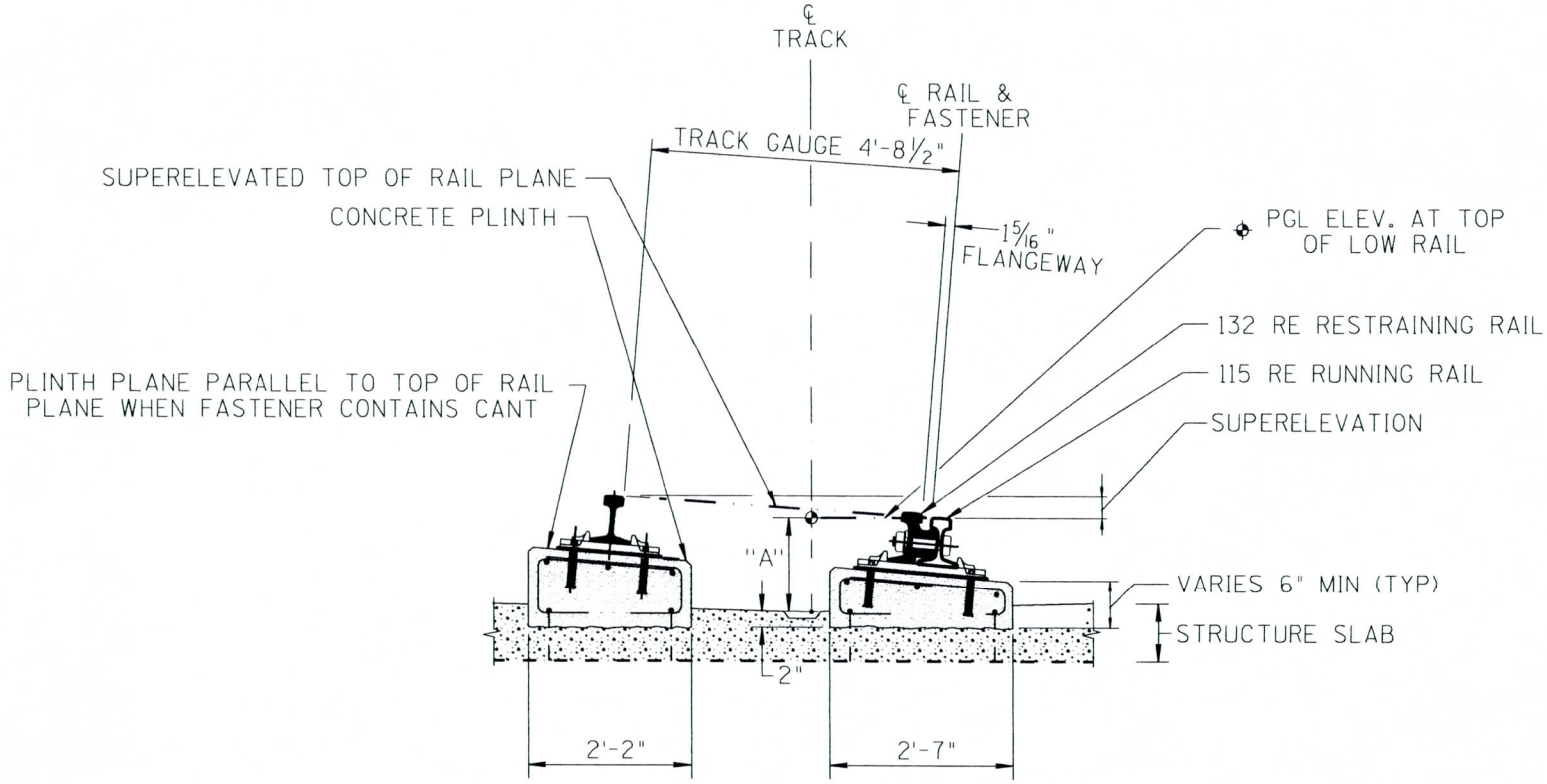

"A" DIMENSION TO BE ESTABLISHED USING COMPONENT HEIGHTS AND TYPE OF PLINTH INSTALLATION AT SURFACE OR RECESSED.

PGL - PROFILE GRADE LINE

METRO	VALLEY METRO RAIL, INC.	DESIGN CRITERIA	DATE January, 2007
		CURVED SUPERELEVATION DIRECT FIXATION TRACK W/ RESTRAINING RAIL	FIGURE NO. 4–3

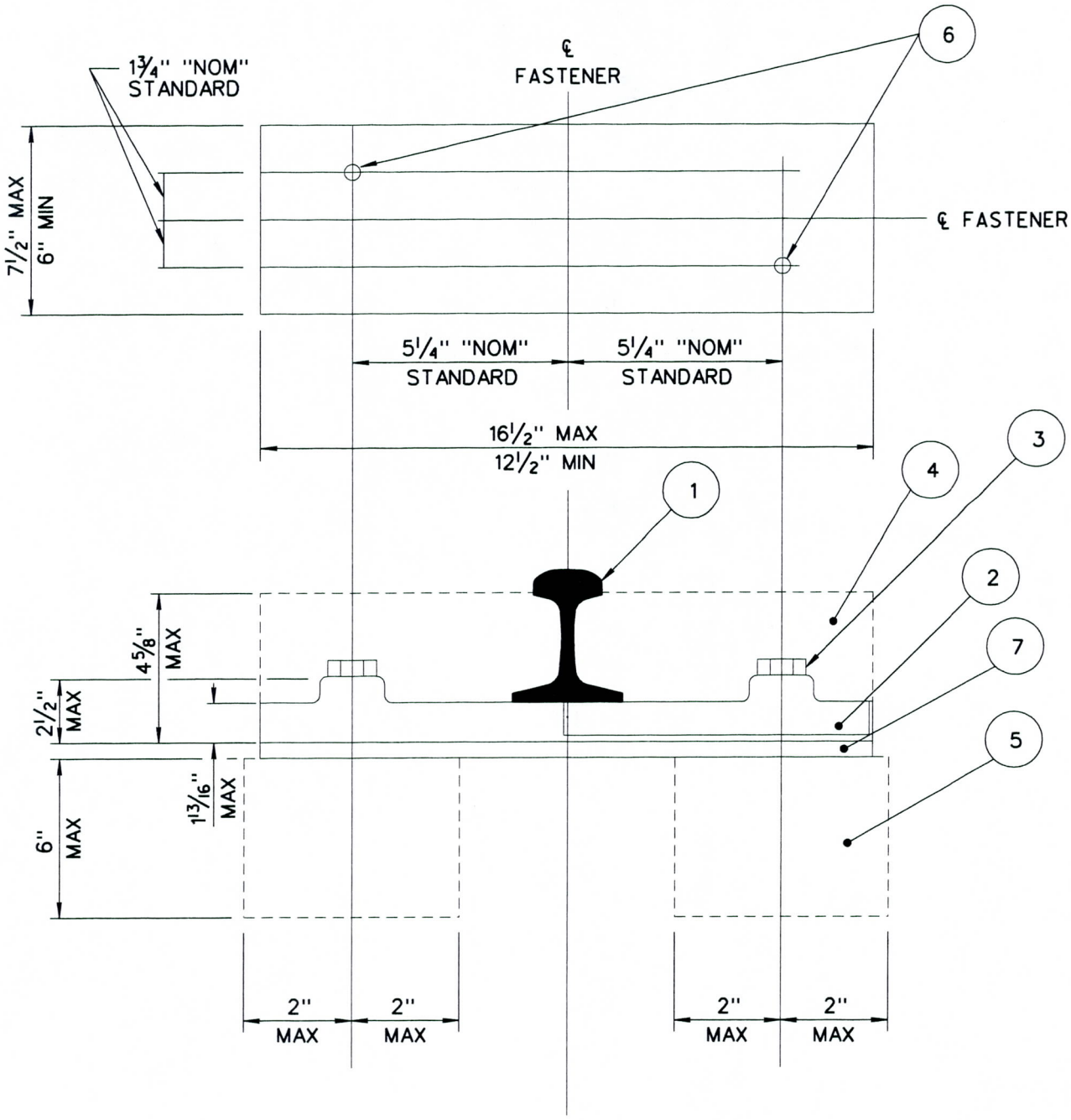

NOTE: * MAY VARY ON FLOATING SLAB INSTALLATIONS

1 115 RE RAIL

2 FASTENER BODY

3 ⅞ IN. THREADED ANCHOR BOLT

4 FASTENER CLIP ENVELOPE

5 FEMALE ANCHORAGE INSERT ENVELOPE

6 ANCHOR BOLT HOLE

7 SHIM (IF REQUIRED)

METRO	VALLEY METRO RAIL, INC.	DESIGN CRITERIA	DATE January, 2007
		DIRECT FIXATION RAIL FASTENER CLEARANCE ENVELOPE	FIGURE NO. 4-4

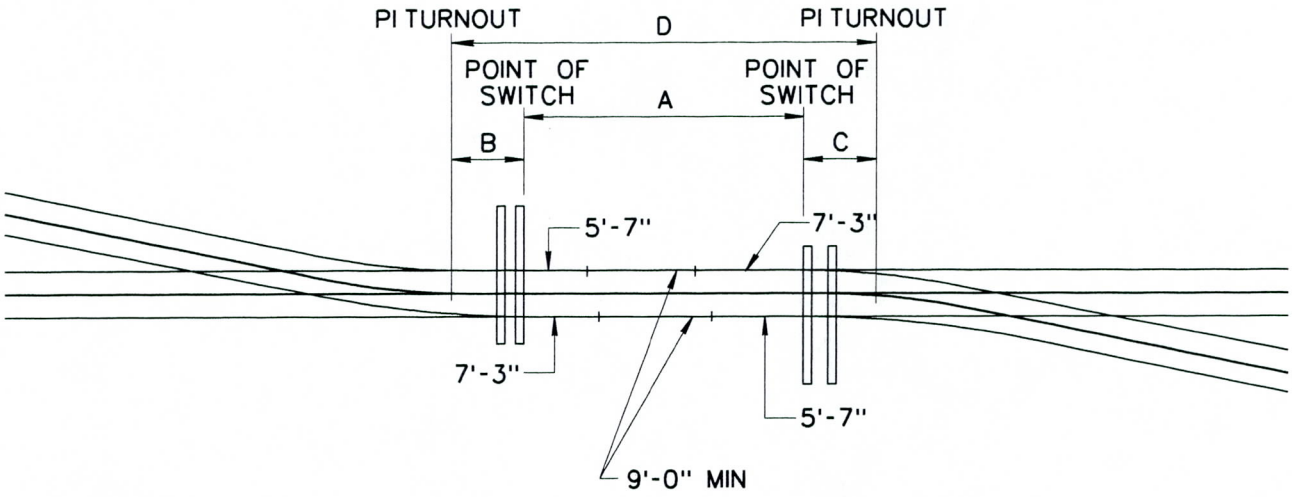

RIGHT HAND TURNOUT ①

RIGHT HAND TURNOUT ②

TURNOUTS		DIMENSIONS			
①	②	A	B	C	D
NO 6 TO NO 6		22' ABS MIN 35' DESIRABLE	21'-3"	21'-3"	64'-6" ABS MIN 77'-6" DESIRABLE
NO 6 TO NO 8		22' ABS MIN 35' DESIRABLE	21'-3"	20'-5"	63'-8" ABS MIN 76'8" DESIRABLE
NO 6 TO NO 10		22' ABS MIN 35' DESIRABLE	21'-3"	31'-5"	74'-8" ABS MIN 87'-8" DESIRABLE
NO 8 TO NO 8		29' ABS MIN 39' DESIRABLE	20'-5"	20'-5"	61'-10" ABS MIN 97'-10" DESIRABLE
NO 8 TO NO 10		29' ABS MIN 39' DESIRABLE	20'-5"	31'-5"	80'-10" ABS MIN. 90'-10" DESIRABLE
NO 10 TO NO 10		29 ABS MIN 39' DESIRABLE	31'-5"	31'-5"	91'-10" ABS MIN. 101'-10" DESIRABLE

NOTES:
(1) THE ABOVE FIGURES ARE BASED ON 32' TRUCK CENTERS AND 7' AXLE CENTERS.
(2) DISTANCE "A" SUBJECT TO CHANGE BASED ON ACTUAL VEHICLE DIMENSIONS.
(3) NO 8 TURNOUTS USING 13'-0" CURVED SWITCH.

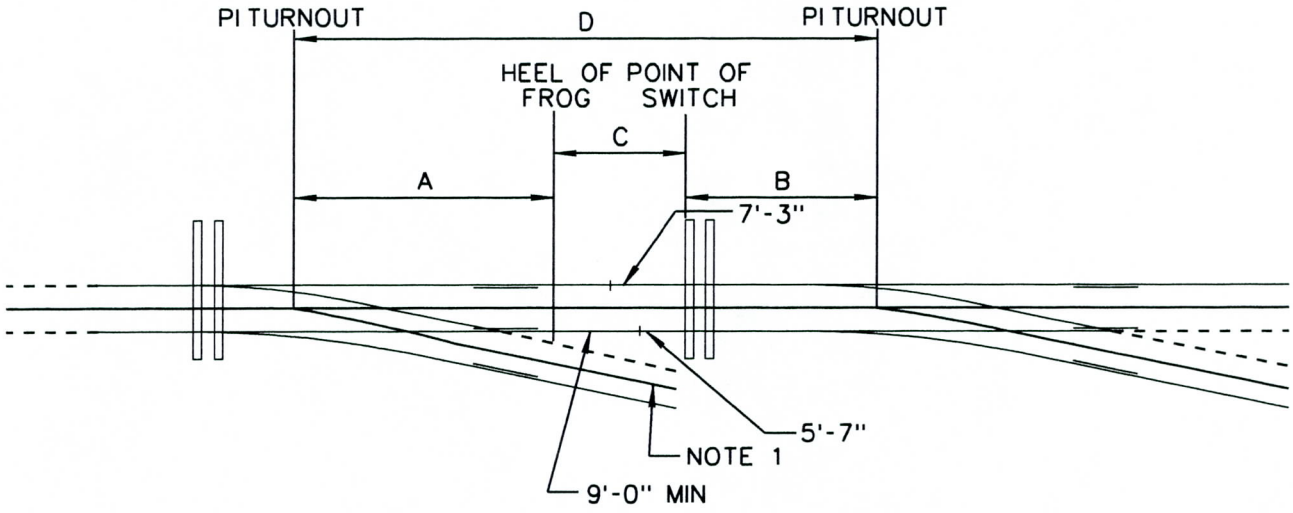

TURNOUT① TURNOUT ②

TURNOUTS		DISTANCES				DESIGNS REMARKS
①	②	A	B	C	D	
NO 6 TO NO 6		36'-9"	21'-3"	17.5213'	75.5213'	9° 31'38" LADDER TRACK FOR 12'-5" TRACK CENTERS
NO 6 TO NO 6		36'-9"	21'-3"	26.5838'	84.5838'	9° 31'38" LADDER TRACK FOR 14'-0" TRACK CENTERS
NO 6 TO NO 6		36'-9"	21'-3"	14.7291'	72.7291'	MINIMUM 9'-0" RAIL PLUS THERMITE WELDS - HEEL OF FROG TO END OF STOCK RAIL
NO 6 TO NO 8		36'-9"	20'-5"	14.7291'	71.8958'	
NO 6 TO NO 10		36'-9"	31'-5"	14.7291'	82.8958'	
NO 8 TO NO 6		47'-5"	21'-3"	14.7291'	83.3958'	
NO 8 TO NO 8		47'-5"	20'-5"	14.7291'	82.5625'	
NO 8 TO NO 10		47'-5"	31'-5"	14.7291'	93.5625'	
NO 10 TO NO 6		58'-10"	21'-3"	14.7291'	94.8125'	
NO 10 TO NO 8		58'-10"	20'-5"	14.7291'	93.9791'	
NO 10 TO NO 10		58'-10"	31'-5"	14.7291'	104.9791'	

NOTES: (1) TURNOUT ①TRACK MUST CURVE AWAY FROM TURNOUT ② LATERAL TRACK.
(2) NO 8 TURNOUTS USING 13'-0" CURVED SWITCH.

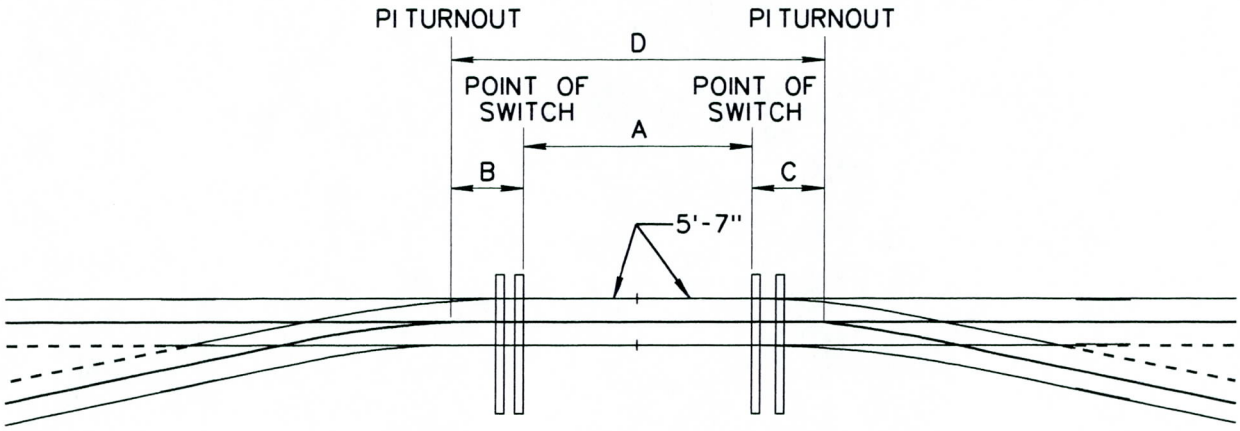

LEFT HAND TURNOUT ① RIGHT HAND TURNOUT ②

TURNOUTS		DIMENSIONS			
①	②	A	B	C	D
NO 6 TO NO 6		11'-3" ABS MIN[1] 35' DESIRABLE	21'-3"	21'-3"	53'-9" ABS MIN 77'-6" DESIRABLE
NO 6 TO NO 8		11'-3" ABS MIN[1] 35' DESIRABLE	21'-3"	20'-5"	52'-11" ABS MIN 76'-8"'' DESIRABLE
NO 6 TO NO 10		22' ABS MIN 35' DESIRABLE	21'-3"	31'-5"	74'-8" ABS MIN 87'-8" DESIRABLE
NO 8 TO NO 8		29' ABS MIN 39' DESIRABLE	20'-5"	20'-5"	66'-10" ABS MIN 79'-10" DESIRABLE
NO 8 TO NO 10		29' ABS MIN 39' DESIRABLE	20'-5"	31'-5"	80'-10" ABS MIN 90'-10" DESIRABLE
NO 10 TO NO 10		29' ABS MIN 39' DESIRABLE	31'-5"	31'-5"	91'-10" ABS MIN 101'-5" DESIRABLE

NOTES:
(1) BUTTING STOCK RAILS PLUS THERMITE WELD.
(2) (THE ABOVE FIGURES ARE BASED ON 32' TRUCK CENTERS AND 7' AXLE CENTERS DISTANCE "A" SUBJECT TO CHANGE BASED ON ACTUAL VEHICLE DIMENSIONS.
(3) NO 8 TURNOUT USING 13'-0" CURVE SWITCH.

METRO	VALLEY METRO RAIL, INC.	DESIGN CRITERIA	DATE January, 2007
		POINT OF SWITCH TO POINT OF SWITCH (OPPOSITE HAND TURNOUTS)	FIGURE NO. 4–7

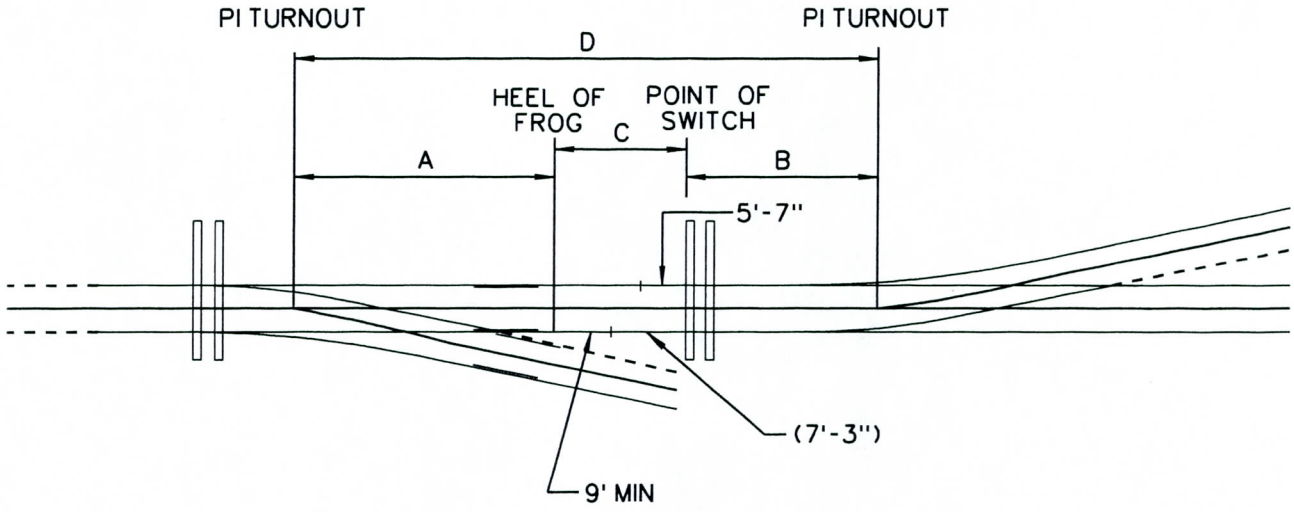

RIGHT HAND TURNOUT ①

LEFT HAND TURNOUT ②

TURNOUTS		DISTANCES				DESIGNS REMARKS
①	②	A	B	C	D	
NO 6 TO NO 6		36'-9"	21'-3"	16.3958'	74.3958'	MINIMUM 9'-0" RAIL PLUS THERMITE WELDS - HEEL OF FROG TO END OF STOCK RAIL
NO 6 TO NO 8		36'-9"	20'-5"	16.3958'	73.5626'	
NO 6 TO NO 10		36'-9"	31'-5"	16.3958'	84.5625'	
NO 8 TO NO 6		47'-5"	21'-3"	16.3958'	85.0625'	
NO 8 TO NO 8		47'-5"	20'-5"	16.3958'	84.2292'	
NO 8 TO NO 10		47'-5"	31'-5"	16.3958'	95.2292'	
NO 10 TO NO 6		58'-10"	21'-3"	16.3958'	96.4791'	
NO 10 TO NO8		58'-10"	20'-5"	16.3958'	95.6459'	
NO 10 TO NO 10		58'-10"	31'-5"	16.3958'	106.6458'	

NOTES: (1) NO 8 TURNOUTS USING 13'-0" CURVED SWITCH

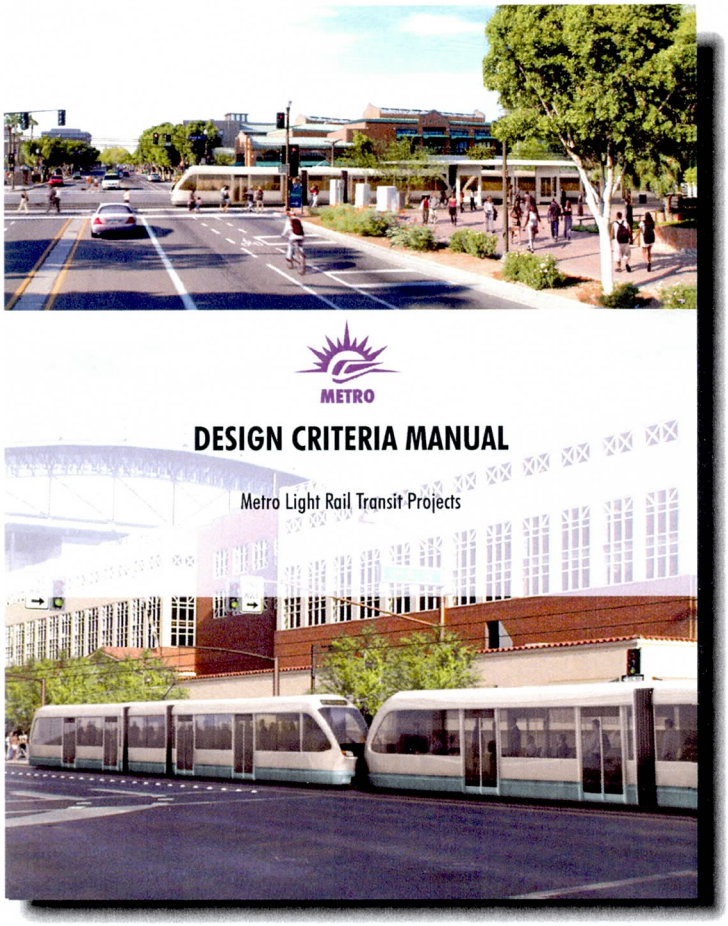

Chapter 5.0

Structural

5.0 STRUCTURAL

5.1 Introduction

The purpose of this chapter is to establish the standards and design policies for the basic structural design on the METRO LRT project. Structures include bridges, underground structures (cut-and-cover tunnel sections), retaining walls, U-sections, transit stations (at-grade and aerial) and appurtenances, buildings, construction structures, and other miscellaneous structures.

5.2 Design Codes, Manuals and Specifications

The following codes, manuals, and specifications shall be applicable to the design of structures (all publications listed shall be the latest edition unless noted otherwise):

American Association of State Highway and Transportation Officials (AASHTO) Standard Specifications for Highway Bridges hereinafter referred to the AASHTO Standards. American Railway Engineering and Maintenance–of-Way Association for railways design and maintenance standards hereinafter referred to as the AREMA Manual.

AASHTO LRFD Bridge Design Specifications.

AASHTO Guide Specifications for Design and Construction of Segmental Concrete Bridges.

AASHTO Guide Specifications for Structural Design of Sound Barriers.

Arizona Department of Transportation Structural Design Guidelines.

Arizona Department of Transportation Detailing Manual.

Arizona Department of Transportation Standard Specifications for Road and Bridge Construction.

AREMA Manual for Railway Engineering hereinafter referred to as the AREMA Manual.

International Conference of Building Officials (ICBO), Uniform Building Code (UBC), and or International Building Code (IBC).

American Concrete Institute (ACI) ACI 318 Building Code Requirements for Reinforced Concrete hereinafter referred to as ACI 318.

American Institute of Steel Construction (AISC) Manual for Steel Construction hereinafter referred to as the AISC Specifications.

AASHTO Manual for Condition Evaluation of Bridges

AASHTO Guide Specifications for Horizontally Curved Highway Bridges

AASHTO Guide Specifications for Strength Evaluation of Existing Steel and Concrete Bridges

AASHTO Guide Specifications – Thermal Effects in Concrete Bridge Structures

Transit Cooperative Research Program (TCRP) Report 57 Track Design Handbook for Light Rail Transit

Post-Tensioning Institute (PTI) Recommendations for Prestressed Rock and Soil Anchors

Maricopa Association of Governments Uniform Standard Specifications and Details for Public Work Construction

In the event of conflict between these sources, provisions of ADOT govern over AASHTO; AASHTO and ADOT govern over Precast/Prestressed Concrete Institute (PCI), American Concrete Institute (ACI) and AISC; and the rail transit provisions govern over all other references.

The most recent edition of Uniform Building Code, Structural Specialty Code and Fire and Life Safety Code shall be used or applicable building code used by the City or local jurisdiction enforcing the code.

5.3 Loads and Forces

The actual live loads and forces shall be determined based upon the following loads and forces.

5.3.1 Dead Load

The dead load shall consist of the estimated weight of the basic structure and the weight of all elements permanently supported by the structure such as: trackwork, electrification, railings, barriers, utilities, walkways, canopies, walls, and partitions.

5.3.2 Live Loads

Structures subject to light rail vehicle (LRV) train loading shall be designed for the maximum vehicle loading shown in Figure 5-1. The loading of selected rail maintenance equipment shall be assumed to have an axle load/configuration that does not exceed the standard fully loaded LRV. Structural calculations shall be required to confirm the adequacy of the design after the LRV characteristics are confirmed.

Transit passenger stations and other structures not subject to LRV loading shall be designed for live loads prescribed in the Uniform Building Code (UBC) or applicable building code used by the City or local jurisdiction enforcing the code. Minimum live loads for the transit passenger stations shall be:

Public spaces including passenger platforms, stairways, escalators, mezzanines, corridors, and public restrooms:	150 psf
Office areas:	125 psf
Storage areas:	light storage - 125 psf heavy storage - 250 psf

Equipment spaces (rooms in transit stations or in separate buildings) shall be designed for 250 psf, or the actual weight of equipment, whichever is greater.

5.3.3 Impact

Vertical impact on structures subject to LRV train loads (See Figure 5-1) shall be as follows:

- continuous multi-span structures = 30%
- simple span structures less than 100 feet = 30%
- simple span structures between 100 to 160 feet = 40%

Vertical impact does not apply to abutments, foundations, wall type piers, underground structures with 3 feet or more of cover and base slabs supported by earth (either at-grade or in subways).

Impact on structures subject to LRV loading shall be in accordance with these requirements and in accordance with the AREMA manual. Impact on structures subject to highway loading shall be in accordance with the requirements in the AASHTO Standard Specifications and ADOT Structural Design Guidelines.

5.3.4 Derailment Loads

Derailment loads shall be those produced by the LRT vehicle placed with its longitudinal axis parallel to the track.

5.3.4.1 Application of Derailment Loads

Derailment loads shall be applied to all superstructure and substructure elements subjected to LRT loadings.

5.3.4.2 Vertical Derailment Loads

Lateral vehicle excursion shall be assumed as follows:

1. For track constructed with an emergency guardrail placed 10-inches from each running rail, the lateral vehicle excursion shall vary from 4 inches minimum to 10 inches maximum. Restraining rails, which are placed adjacent to the running rails for reducing wheel wear, shall not be considered as emergency guardrails.

2. For tangent track and curved track with radii greater than 5,000 feet and lacking emergency guardrails, the lateral vehicle excursion shall very from 4 inches minimum to 3 feet-0 inches maximum.

3. For track with smaller radii, and where the distance from the rail to the edge of the deck slab is less than 3 feet-8 inches the maximum excursion shall be adjusted so that the derailed wheel flange is located 8 inches from the rail traffic face of the nearest barrier, if any, or the edge of the deck.

When checking any component of superstructure or substructure that supports two or more tracks, only one train on one track shall be considered to have derailed, the other track being either unloaded or loaded with a stationary train as the situation dictates.

All elements of the structure shall be checked assuming simultaneous application of all derailed wheel loads. However, the reduction of positive moment in continuous slabs due to derailed wheel loads in adjacent spans shall not be allowed.

The vertical derailment load shall be as follows:

DR = L + ID

Where: L = LRT vehicle live load.

ID = Derailment impact at 100 percent of the axle load to be applied to any two adjacent axles at a time and normal impact factor for all other axles, which produces critical loading condition for the structures.

5.3.4.3 Horizontal Derailment Loads

A. At all sections lacking emergency guardrails, with maximum vehicle speeds between 45 miles per hour and 65 miles per hour, horizontal force due to derailment loads shall be taken as 30 percent of the weight of a single vehicle acting 2 feet above top of rail and normal to the structure centerline for a distance of 10 feet.

B. At all sections lacking emergency guardrails, with maximum vehicle speeds less than 45 miles per hour, horizontal force due to derailment loads shall be taken as 10 percent of the weight of a single vehicle acting 2 feet above top of rail and normal to the structure centerline for a distance of 10 feet.

C. At all sections which include emergency guardrails, with maximum vehicle speeds of 65 miles per hour or less, horizontal force due to derailment loads shall be taken as 10 percent of the weight of a single vehicle acting 2 feet above top of rail and normal to the structure centerline for a distance of 10 feet.

5.3.5 Other Loads and Forces

Other loads and forces (i.e., wind, flowing water, thermal, longitudinal, centrifugal, shrinkage, etc.) on structures shall be as follows:

- structures subject to LRV or highway loading: AASHTO Standards;
- structures subject to railroad loading: AREMA Manual;
- other structures: Uniform Building Code or applicable building code used by the City or local jurisdiction enforcing the code; and
- bridges subject to river flows and scour: AASHTO Standards.

5.4 Seismic Design

Seismic design for all structures subjected to LRT loads shall be in accordance with the ADOT Structural Design Guidelines. Seismic design of buildings and other structures for the forces and displacements produced by ground shaking shall be in accordance with the Uniform Building Code/International Building Code.

5.5 Soils and Geologic Data

The soils in the Phoenix and Tempe area vary. Soil and geologic data/and or reports for the preliminary design of structures shall be site-specific data. Preliminary recommendations shall be provided in the project structural reports prepared during the Preliminary Engineering phase. On Final Design, site-specific soil and geological data shall be obtained to develop the design parameters.

Commonly used foundations for bridges, retaining structures, and buildings in the Phoenix and Tempe area include: spread footings; driven precast concrete piles; and drilled shafts. Foundation recommendations shall be made in a site-specific project geotechnical report(s). Foundations shall be designed according to AASHTO, ADOT Standards, or local jurisdiction standards. River scour where applicable shall also be considered in the report.

5.6 Reinforced and Prestressed Concrete

Reinforced and prestressed concrete structures shall be designed in accordance with the requirements of the following:

- structures subject to LRT train loading: AASHTO and ACI 318
- structures subject to railroad loading: AREMA Manual
- structures subject to highway loading: AASHTO and ADOT Standards
- buildings and other structures: ACI 318

5.7 Structural Steel

Structural Steel structures shall be designed in accordance with the requirements of the following:

- structures subject to LRV loading: AASHTO and AISC
- structures subject to railroad loading: AREMA Manual
- structures subject to highway loading: AASHTO and ADOT Standards
- buildings and other structures: AISC Specifications

5.8 Earth Retaining Structures

Cut and fill earth-retaining structures will vary in different geologic settings along the LRT rail alignments. The selection of the types of retaining structures and their design shall be based on the recommendations in the site-specific project geotechnical report(s). Commonly used earth retaining structures in the Phoenix and Metropolitan area include reinforced concrete cantilever walls and mechanically stabilized earth (MSE) walls. Other wall types may be utilized where site conditions dictate. Consideration should be given to "top-down" construction techniques in cut situations, where right-of-way permits.

5.9 Underground Structures

All underground structures shall be classified in one of the categories listed below. For each category, the following assumptions shall be made:

5.9.1 Reinforced Concrete Box Line and Station Section

A. These structures retain earth but are not free to yield significantly. As a minimum, four basic loading cases shall be investigated. Load values shall be developed from geotechnical information. Additional permanent, temporary, and construction loading cases shall be investigated as required.

Case 1: Full vertical and long-term horizontal load.

Case II: Full vertical load, long-term horizontal load on one side and short-term horizontal load on the other side.

In underground concrete box structures that could be subject to unequal lateral pressures, the structural analysis shall consider the top slab as both restrained and unrestrained against horizontal translation in arriving at maximum shears, thrusts, and moments. However, the ratio of horizontal displacement to height of the wall need not exceed 0.0005.

Case III: Full vertical load with short-term horizontal load neglecting groundwater pressure on both sides.

Case IV: Only dead vertical load with long-term horizontal load including hydrostatic pressure.

B. Foundation Pressures

Vertical pressure on foundation slabs may be divided into hydrostatic and earth pressure components. The hydrostatic component shall be distributed across the width of the foundation in proportion to the depth of each portion of the basic slab below the design groundwater table.

Distribution of the earth pressure distribution shall be based on specified construction procedures if they affect the distribution, and may include elastic foundation effects if significant changes in frame or slab stress are introduced thereby. Where a box structure rests on soil subgrade, a uniform distribution of subgrade soil reaction shall be assumed as one possible condition.

C. For design, the horizontal earth pressure distribution diagram shall be trapezoidal. Compression forces shall not be considered in shear design of the top and bottom slab in box sections.

D. In evaluating the design for temporary loadings produced by construction conditions such as the removal of horizontal struts, consideration shall be given to:

1. Allowable increase in stresses due to the temporary nature of the loading.
2. Creep in the concrete.
3. Effect of soil arching.
4. Wall and slab flexibility.

E. Where it is anticipated that restrutting will be proposed by the contractor, due to the limitations inherent in the design of the permanent structure, the construction specifications are to stipulate that the working drawings, supporting computations, and order of procedure submitted for approval by the contractor must reflect proper consideration of such aspects as magnitude of preload in replacement struts, crushing of packing, and thermal-induced stress and deflection of the permanent structure. The contractor's proposal shall also detail the proposed instrumentation and monitoring thereof to ensure that the permanent structure shall not be overstressed or otherwise damaged.

F. In all cases, the specifications for support of excavation must reflect any limitations inherent in the design of the permanent structure.

G. Allowance must be made for corrosion control in accordance with Chapter 19, Corrosion Control.

5.9.2 Reinforced Concrete Retaining Walls

These structures are free to yield to earth pressure. In retaining walls up to 20 feet-0 inches in height, the design earth pressure shall be computed in accordance with recommendations of the geotechnical report. Retaining walls above 20 feet-0 inches in height shall be designed on the basis of specific soils information relating to the backfill material using an acceptable method as identified in the Geotechnical Report.

5.9.3 Shafts

Permanent shaft walls shall be reinforced concrete. Loadings imposed on the shafts by the surrounding medium shall be determined by the designer in accordance with the Geotechnical Report and shall be consistent with the shaft configuration.

5.9.4 Sound Walls

Ensure sound wall design provides through access to adjacent neighborhoods and appropriate land uses. Sound walls shall comply with the *Urban Design Guidelines for Bridges and Walls*, page 24.

5.10 Portals and U-Sections

A. In locating portals and determining the ends of U-sections and walls, consideration shall be given to providing protection against flooding resulting from local storm runoff.

B. Adequate provision shall be made for resistance to hydrostatic uplift with the immediate and effective removal of water from rainfall, drainage, groundwater seepage, or any other source.

C. U-sections, with both walls continuous with a full-width base slab, shall be used for open-cut sections where the top of rail is less than 4' above the maximum groundwater table. Above that level, independent reinforced concrete cantilever retaining walls may be considered for design.

D. U-sections may be analyzed as continuous structures on elastic foundations. If at any station the two walls are of unequal heights, then the factor of safety against sliding shall be a minimum of:

   1. 1.5 with no passive resistance of the soil.
   2. 2.0 with passive resistance of the soil.

E. Wall thickness for U-sections shall be designed by using:

   1. The geotechnical soils report recommendations for coefficient of lateral earth pressure, at-rest case.
   2. Hydrostatic pressure.
   3. Surcharge effects.

F. U-section grade slab design thickness shall be 6 inches greater than the wall thickness, with a minimum thickness of 24 inches. If the weight of the grade slab (in psf) is less than 40 percent of the hydrostatic head (in psf) as measured from the bottom of the grade slab, then the grade slab shall be designed for uplift pressure.

G. If, at the last U-section segment away from the portals, the abutting at-grade trackway does not consist of a track slab, then a depressed approach slab shall be provided to permit the construction of tie-and-ballast trackbed up to the end of the typical base slab without a sharp break in support at that point.

5.11 Aerial Structures

The criteria set forth in this section shall pertain specifically to the design of bridges carrying light rail transit loadings.

5.11.1 Design Specifications

A. AASHTO current Standard Specifications for Highway Bridges shall govern the design and construction of aerial structures supporting LRV loadings.

B. The Strength Design Method (Load Factor Design Method as per AASHTO) shall be used for the design of all structural components and connections. To ensure serviceability and durability, permanent deformations under overloads, live load deflections, and fatigue characteristics under service loadings shall be investigated.

5.11.2 Application of Loadings

Light Rail Vehicle Loading is defined in Figure 5-1. Unless otherwise directed by METRO, use this loading diagram for structure design on the LRT system. For structures carrying LRV loads, one train per track shall be applied for both strength and serviceability considerations in all materials. When all or a portion of deck width is dedicated exclusively to LRT, only the LRV loads are to be applied to that width.

5.11.3 Reduction in Load Intensity

For structures carrying LRV loads, a track shall be treated as a traffic lane in applying the provisions of AASHTO, current standard specifications for highway construction.

5.11.4 Special Design Considerations

5.11.4.1 Vibration and Deflection Control

To limit vibration amplification due to the dynamic interaction between the superstructure and the LRV, the first-mode natural frequency of flexural vibration of each guideway span should generally be not less than 2.5 cycles per second and no more than one span in a series of three consecutive spans should have a first-mode natural frequencies less than 2.5 cycles per second provided that due consideration is given to possible vibration interactions between the structure and the LRV, and their effect on vertical impact loading.

To ensure rider comfort, the deflection of longitudinal girders under normal live load should not exceed 1/1000 of the span length. For main cantilever girders, the deflection under normal live load should not exceed 1/350 of the cantilever span.

A special analysis shall be conducted for any bridge or superstructures having a first mode of vibration, which is less than 2.5 hertz, or for the condition when more than one span in a series of three consecutive spans has the first mode of vibration, which is less than 3.0 hertz.

This analysis shall model the proposed structure and the proposed LRV. The analysis shall contain a sufficient number of degrees of freedom to allow modeling of the structure, vehicle truck spacing, vehicle primary suspension, vehicle secondary suspension, and the car body. It shall make provision for the placement of the vehicle on the structure in various locations in order to model the passage of the LRV. When the exact configuration of either the vehicle or the structure is not known, the study shall assume a reasonable range of parameters and shall model combinations of those parameters as deemed appropriate.

The analysis shall determine whether impact loads in excess of 30 percent of LRV are required for the design of the structure. The analysis shall also determine whether certain operational considerations such as speed restriction or other provisions are required in order to ensure the safe operation of the LRV over the structure.

5.11.4.2 Trackwork

Consideration shall be given to the thermal force interaction between the structural components and the trackwork system. Thermal force calculations shall start with the Rail Installation Temperature as the base temperature for the trackwork.

5.11.4.3 Fatigue

Consideration shall be given to the effect of change of stress levels caused by passage of light rail trains over structures. Over the life of the structure, 3 million cycles of maximum stress shall be used in estimating the number of repetitive maximum stress cycles.

5.11.4.4 Uplift

Provision shall be made for adequate attachment of the superstructure to the substructure should any combination of loading produce uplift at any support. Where DL, E, or any other loadings tend to reduce the uplift effect, the corresponding load factors shall be taken as 0.9 for DL, 0.75 for E, and zero for other loadings.

5.11.4.5 Friction

Where applicable, friction shall be considered in the design. Friction forces shall include acceleration and braking forces from the LRT vehicle.

5.11.4.6 LRT Stray Current Provisions

Stray current provisions are detailed in Chapter 19, Corrosion Control.

5.11.4.7 Rail Break

Consideration shall be given to the impact loading from a rail break. The design shall limit the rail gap due to a rail break.

5.12 Support and Underpinning of Existing Structures

Support and underpinning of existing structures shall be determined on a site-specific basis considering the following:

Considerations:

- Type of structure to be underpinned
- Proximity and type of adjacent construction
- Soil properties and tolerable structural deformations
- Methods:
  - Underpinning methods include jacked-down piles, slant-drilled piles, mini-piles, augured shafts, and hand-mined shafts.
  - Rigid protection wall support systems include diaphragm (slurry) walls, contiguous pile (tangent or secant) walls and closely spaced soldier pile walls.

Other methods of controlling ground movement and minimizing settlements include compaction grouting, chemical grouting and ground freezing.

5.13 Support of Excavation Structures

Support of excavation structures shall generally be the responsibility of the Contractor. The Geotechnical Report information will be made available for the Contractor's use. When planning for structures requiring excavation support, spatial and physical constraints (adjacent structures, utilities, etc.) shall be considered.

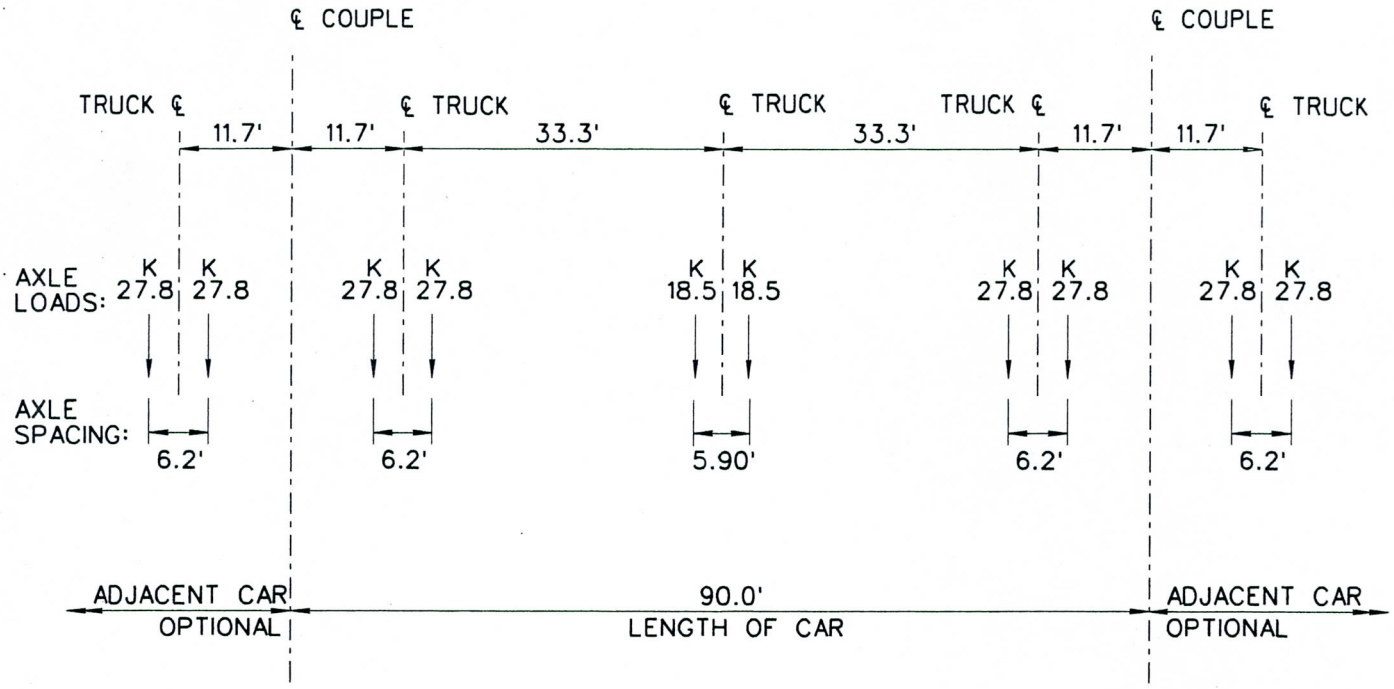

LIGHT RAIL VEHICLE STATIC LOADING

NOTES:

1. AXLE LOAD IN KIPS.
2. TOTAL LOAD 148,200 LBS/CAR
3. THE LRT TRAIN SHALL CONSIST OF EITHER ONE, TWO, OR THREE CARS, WHICHEVER PRODUCES THE MAXIMUM LOAD FOR THE ELEMENT UNDER CONSIDERATION, APPLIES TO BOTH DIRECTIONS.
4. THE LOADS AND DISTANCES DEPICTED ARE WORST CASE SCENARIO.
5. THE VEHICLE IS ASSUMED TO HAVE AN AXLE LOAD/CONFIGURATION THAT DOES NOT EXCEED THE STANDARD LOAD

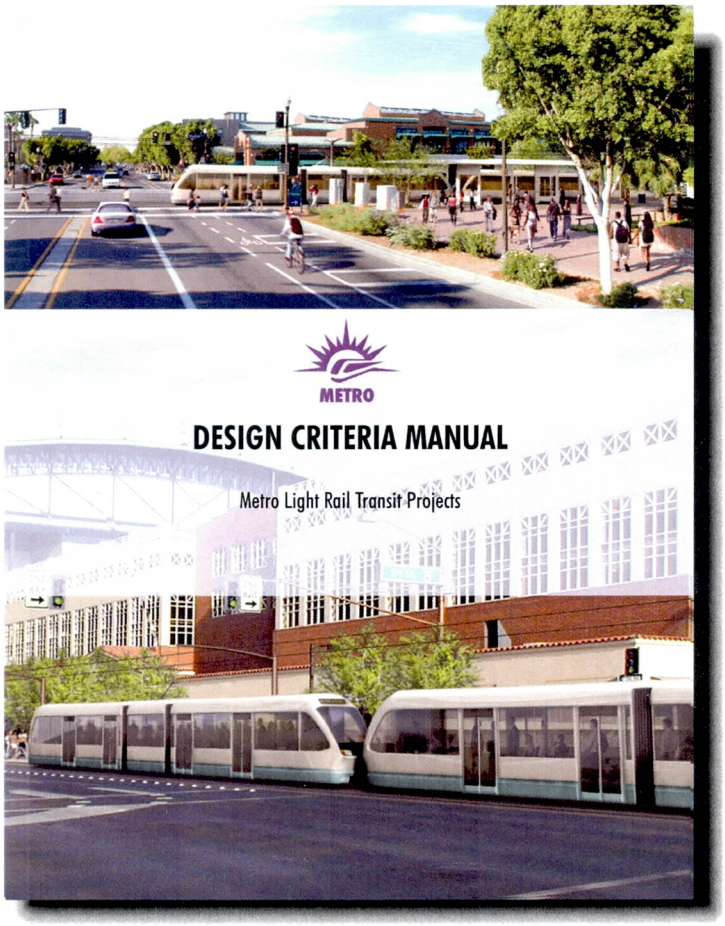

Chapter 6.0

Station and other LRT Facilities Design Criteria

6.0 STATION AND OTHER LRT FACILITIES DESIGN CRITERIA

6.1 Scope

The purpose of this chapter is to establish the standards and design policies for the design of METRO LRT stations, transit centers, park and ride sites and other LRT facilities located outside of the right-of-way. Elements discussed in this section include:

- The design of platforms, amenities, and platform access,
- The Conformed Station Finishes Contract No. LRT-040028-SF Standard Drawings, Volume 3, Book 6 of 6, dated October 11, 2005 – and as subsequently modified by Valley Metro Rail,
- General guidelines for use in the design of bus access (transit centers), kiss-and-ride and park-and ride facilities, METRO Crew operator facilities,
- Urban Design Guidelines for the Central Phoenix/East Valley (CP/EV) Rail Project (June 2001), and
- Climate, Comfort and Health Report, Central Phoenix/East Valley Light Rail Transit, Professors Harvey Bryan and Jeff Cook, Arizona State University (May 2001)

The general configuration of the stations should be standardized wherever possible. However, to help establish a neighborhood identity for each station or block of stations, a certain level of design freedom is allowed on the following station elements; canopies, guardrails, floor finishes, artwork, station areas ("free areas"), plaza areas, and other related items. Signage and maps shall be the same system wide. Any deviation from standardization should be avoided except when approved by (METRO) or its representative.

6.2 Codes and Standards

Stations shall conform to the requirements of the codes (including ordinances), regulations (including general rules and safety orders), and standards listed herein.

Where the requirements stipulated in this document or any referenced source are in conflict, the more restrictive requirement shall govern.

Unless specifically noted, the latest edition of the code, regulation and standard that is applicable at the time the design shall be used. If a new edition or amendment to a code, regulation or standard is issued before the design is completed, the design shall conform to the new requirement(s) to the extent practical or required by the governmental authority enforcing the code, regulation or standard changed.

6.2.1 Applicable Codes and Standards Include:

METRO building plan reviews are conducted to help ensure compliance with the Glendale, Mesa, Tempe, and Phoenix Construction Code. All station platform foundations *within* the street right-of way are reviewed for building safety only by the City of Phoenix (no reviews required by the Cities of Tempe or Mesa), and in-street side platforms receive a "courtesy Site Planning review" by the City of Phoenix. In all Cities, METRO facilities within the street right-of-way are reviewed for building safety

only. Design Consultant/Architect need to contact the City of Glendale to determine types of review required by building safety and Glendale's applicable codes. All stations, bus access (transit centers), kiss-and-ride, park-and ride facilities, METRO Crew operator facilities located *outside* the right-of-way - require Site Planning and building safety review.

A. The latest governing Construction Codes in each City are based on the following:
   - International Fire Code (IFC) with City Amendments
   - International Building Code IBC) with City Amendments
   - International Residential Code (IRC) with City Amendments
   - International Energy Conservation Code as amended in the 2004 ICC Supplement, and with City amendments
   - International Mechanical Code (IMC) with City Amendments
   - International Existing Building Code (IEBC) with City Amendments
   - International Code Council Performance Code with City Amendments
   - Arizona State Plumbing Code with supplements
   - National Electrical Code (NEC)/NFPA-70 with City Amendments
   - ASME A17.1 Safety Code for Elevators and Escalators with City Amendments
   - 2002 ASME A17.3 Safety Code for Existing Elevators and Escalators with City Amendments
   - 2003 ASME A18.1 Safety Code for Platform Lifts and Stairway Chairlifts
   - City Building Construction Codes - Administrative Provisions

B. Maricopa Association of Governments (MAG) Standard – Uniform Specifications and Details for Public Works Construction with City of Phoenix Supplements – Uniform Standard Specifications for Public Works Construction (via City of Phoenix Development Services Department) – Uniform Specifications and Details for Public Works Construction with City of Tempe Supplements.

C. Engineering Design Criteria (Civil Engineering/Right of Way), Phoenix/Tempe Standard Details (Supplement to the MAG).

D. Mesa Standard Details & Specifications Amendment to the Uniform Standard Details & Specifications February 1, 2000.

E. City of Mesa Procedure Manual Engineering & Design Standards, Second Edition December 1990.

F. NFPA 101 - Safety from Fire in Buildings and Structures.

G. NFPA 130 - Standards for Fixed Guideway Transit Systems.

H. Americans with Disabilities Act Title II Regulations (Title II), American with Disabilities Act Title III Regulations (Title III), and American with Disabilities Act Accessibility Guidelines (ADAAG).

I. ANSI 117.1, Accessible and Usable Buildings and Facilities.

J. Codes of Applicable Jurisdictions.

K. CPTED - Crime Prevention Through Environmental Design.

L. Urban Design Guidelines for the CP/EV Rail Project (June 2001).

M. METRO Northwest Extension Project – Light Rail Design Criteria Manual;

N. METRO Northwest Extension Project – Graphic Standards Manual or equivalent (under development); and

O. Valley Metro Passenger Facilities Handbook.

P. The use of sprinklers at station/transit center shade structures has been waived by the Cities of Phoenix, Tempe and Mesa Fire Departments.

6.2.2 Development Permitting Process

6.2.2.1 Introduction

Construction permits will be required for:

1. Construction activity outside the Right-of-Way
2. Any Structure (building, parking lot, Stations, etc.) that is impacted by construction
3. Back flow preventors and fire lines for buildings.
4. Water/Sewer lines impacted by construction will require Maricopa County Environmental Services approval / permits
5. Barricades for Traffic Control
6. New sign installations and sign relocations

All city agencies affected by the Light Rail project will require permits for the above features. The following agencies must be contacted with respect to the development permitting process.

1. City of Phoenix, Development Services Department
2. City of Mesa, Development Services Department
3. City of Tempe Development Services Department
4. City of Glendale, Planning and Building/ Safety Department.
5. The development permitting process can be accessed for each City by going to their applicable WEB sites.

6.2.2.2 Permitting Process

6.2.2.3 Pre-Application

The Design Consultant shall schedule a Pre-Application meeting with the corresponding municipal Development Services Department prior to the first submittal. The following information will be provided to the Approving Authority.

- Preliminary report describing the affected buildings/structures and identifying critical design issues that need to be resolved. The report also needs to address the applicable agency code, and development and permit requirements.

- Preliminary design drawings showing the limits of construction, elevations, design features etc.
- Design and construction schedule

The purpose of this pre-application meeting is to identify to the agency the impending construction activities and to obtain comments and direction that will facilitate the final design.

In the case of park-and-ride facilities, a 30% (On Board) pre-application process shall be conducted with the agency to determine if re-zoning is necessary or if other restrictions exist on the site that require early resolution. The particular jurisdiction shall determine the documentation required for this initial meeting.

6.2.2.4 95% Design Submittal

The comments resulting from the Pre-Application meeting will be reflected in the 95% design submittal. An updated Design Report will also be required in addition to the Plans and Specifications.

A Development Permit Application will be completed and submitted in draft form along with the 95% submittal plans in accordance with the Agency's Permitting requirements. The purpose of this submittal is to finalize and resolve any issues identified in the Pre-Application meeting so that a final development permit can be completed at the 100% Design Submittal Stage.

6.2.2.5 100% Design Submittal

Based on the comments received by the Agency Development Permitting department a final construction approval /permit will be submitted along with the 100% plans and specifications and final Design Report. The Design Report shall address the following topics:

- Civil - Grading and Drainage, Accessible Design
- Architectural/Landscape Concepts/Art Coordination – A summary of each station
- Structural Requirements
- Plumbing Systems
- Electrical
- Lighting Design
- Signage

6.2.2.6 Permit Fees

METRO will be responsible for all permit fees. It is the design consultant's responsibility to identify the permit fee requirement, complete the fee application forms and submit same to METRO for processing.

6.3 Station Geometrics

Dimensional requirements for the station are established in this section.

6.3.1 Configuration

METRO station platforms shall be either center or side platform type. Center platforms are preferred when in the street median; side platforms are preferred for off-street stations or when site constraints prohibit the use of center platforms.

The platform minimum area (excluding vertical circulation elements, structures, furnishings, surge zones, and the platform detectable warning paver strip) should accommodate the peak 15-minute entraining and detraining loads at 7 square feet per person. Peak hour design headways shall be factored into area calculations.

6.3.2 Platform Length (Calculated Platform)

The standard "calculated platform length" available for boarding and alighting is 280 feet. The absolute minimum platform boarding length is 260 feet and requires METRO approval. See Chapter 7, Operations, for design length and provisions for future expansion to accommodate additional load.

6.3.3 Platform Width

16 feet-4 inches is the minimum design width for METRO station center platforms. The desirable station platform at terminal stations and high patronage stations is 18 feet wide including a 24 inches wide detectable warning strip. For side platforms at-grade, the standard width is 14 feet (12 feet minimum) from the edge of platform to the face of station wall or barrier railing, including a 24 inches wide detectable warning at the platform boarding area.

6.3.4 Travel Lanes/Exit Lanes

For center platform stations, there shall be a minimum of two path of travel lanes along the entire length of the platform between the platform detectable warning paver strip and a wall, balustrade, railing, or other vertical elements. For side platform stations, there shall be one path of travel lane along the entire length of the platform between the platform detectable warning paver strip and a wall, balustrade, railing, or other vertical elements. Side platforms shall include an entry and an emergency exit leading to an area of refuge.

The path of travel lanes shall comply with current federal regulations for accessibility as set forth by the American with Disabilities Act Accessibility Guidelines (ADAAG).

The minimum number of exit lanes shall be as required by NFPA 130. The following factors, in addition to the basic factors outlined in Chapter 7, Operations, of this document, are the basis for calculating travel and exit lanes.

6.3.4.1 Patron Lane Requirements

Physical Dimensions

	Exit Lanes [1] (Emergency Conditions)	Travel Lanes (Day-to-Day)
Lane width	22"	28"
Half lane width	12"	14"
Lane to platform edge	24"	24"
Lane to wall/guardrail on Horizontal. Areas (≤ 4% slope)	12"	12" [2]
Lane to wall/guardrail on stairs, ramps, and sloping sidewalks (> 4% slope)	0"	0"
Lane to Column	0"	0"

Lane Capacity

	Exit Lanes [1] (Emergency Conditions)	Travel Lanes (Day-to-Day)
Horizontal travel (≤ 4%)	50 ppm/lane	40 ppm/lane
Ramps up (> 4%)	35 ppm/lane	30 ppm/lane
Ramps down (> 4%)	40 ppm/lane	35 ppm/lane
Up stairs	35 ppm/lane	18 ppm/lane
Down stairs	40 ppm/lane	22 ppm/lane
LRV doorways	50 ppm/lane	50 ppm/lane

Patron Speed

Horizontal travel (≤ 4%)	200 fpm	150 fpm
Ramps up (> 4%)	200 fpm	120 fpm
Ramps down (> 4%)	200 fpm	120 fpm
Up stairs	50 fpm *	25 fpm *
Down stairs	60 fpm *	35 fpm *

* Vertical component of travel speed

6.3.5 Vertical Clearances

Per the Station Finishes Standard Drawings, any station element that could be targeted for theft or vandalism (e.g., light fixtures, speakers, cameras, etc.) shall be located a minimum of 9 feet-0 inches above traveled pathways. The potential to use benches, trash receptacles, etc., to access these elements should also be considered in locating these elements. In addition, horizontal elements (e.g., canopy framework, sign units, etc.) that could lend themselves to climbing shall also be located 9 feet above the platform floor.

[1] Based on NFPA 130. See code for other requirements.

[2] In addition, travel lanes cannot occupy 3 feet x 3 feet areas in front of METRO ticket (fare) vending machines (TVMs), patron assistance emergency call boxes (ECBs) and system map cases.

6.4 Station Amenities

6.4.1 Shading and Climate Protection

The category of shade and cooling devices, per the Station Finishes Standard Drawings, was identified by the Urban Design Guidelines as the single most important design element in the relationship to the success of the METRO system. Horizontal canopies alone cannot provide the necessary shading and climate protection amenity in this climate without the provision of vertical shading structures. Shading from summer low angle sun by vertical shading elements, especially during evening peak periods, is as important as the shading provided by horizontal canopies during the hours of ten o'clock to two o'clock on the design criteria day, August 21st.

Vertical sunscreens shall be semi-transparent to allow visibility along the platform area and should be angled to allow visibility of both trackways by patrons while seated in shade under the canopies. There shall be a minimum of 50 percent shading for the platform during the hours of ten a.m. to two p.m.

Shade canopies or shading structures shall be designed per the Station Finishes Standard Drawings to maintain all METRO vehicle clearances including overhead contact wire systems when present. Horizontal shade canopies should have reflective index values equal to or greater than 100 as defined in the *Climate, Comfort and Health Report* (May 2001). Horizontal canopy material shall minimize the radiation of heat onto waiting passengers below.

Shade should be provided over pedestrian walkways and within the parking areas to shade patrons using the system. Direct, shaded pedestrian connections should be provided to transit destinations. Use of multi-trunk trees should be encouraged in parking areas to reduce the tendency for blow-down. As a design goal, 75 percent of the walkway area should be shaded, either by architectural or vegetative shade.

6.4.2 Seating

Provide seating as indicated in the Station Finishes Standard Drawings and Urban Design Guidelines that complies with ADAAG Section 4.32. Benches should be distributed along the platform. One bench shall be located near each public entry point to the platform. Benches shall be arranged so that they do not interfere with patron circulation or emergency exiting. Seating will not encroach on queuing and exit way paths.

Benches and/or seating units shall be of designs that will prevent individuals from lying down and/or sleeping. Seating design shall be ADA-compliant. Some portion of the platform seating should be designed with backs and full-length armrests to facilitate use by persons with disabilities, and per the Station Finishes Standard Drawings.

6.4.3 Restrooms

Public restrooms shall not be provided at stations or transit centers. Restrooms complying with ADAAG Section 4.22 for use by METRO operators shall be provided at terminal station Crew facilities. Per the Station Finishes Standard Drawings, the following shall be incorporated into the design of any such facilities, and include:

- One unisex restroom

- Locks with key card operation per METRO operator specifications
- Direct, secure path to/from track area
- No signage identifying use of building
- Separate (from station) electrical and water metering
- No heat
- Natural and mechanical ventilation
- Low maintenance requirements

6.4.4 System Support Element

The need for system support spaces such as signal cabinets, communication cabinets, house power meter, water meters, water valves and irrigation valves box shall be determined on a site-by-site basis and provided only if space for such equipment has not already been allocated in other locations (such as in nearby train control and communication housings or within train control or traction power sites). When on-site equipment is required at a station, where possible it shall be placed off the station platform. Should system support spaces be required on the platform, they shall be designed in accordance with the Station Finishes Standard Drawings and Urban Design Guidelines, and integrated with the station design.

6.4.5 Advertising

There shall be no advertising in the stations. Exceptions will need to be addressed on a case-by-case basis.

6.4.6 Drinking fountains

Per the Station Finishes Standard Drawings, one chilled drinking fountain complying with ADAAG Section 4.15 will be provided per station platform.

6.4.7 Trash Receptacles

Per the Station Finishes Standard Drawings, trash receptacles complying with ADAAG Section 4.4 and 4.27 shall be provided on the platforms, at fare vending areas, and at bus/shuttle (transit center) areas. Receptacles shall not be provided for the general site, parking, or kiss-and-ride areas.

A minimum of one receptacle per fare vending area and a minimum of three per platform shall be provided.

Trash receptacles shall be bolted down to avoid removal by unauthorized persons. Department of Homeland Security guidelines specify that trash receptacles for transit platforms be either bomb resistant or wire mesh with a clear plastic bag. The wire mesh basket type will be used on the initial line. Exterior design shall be compatible with station architecture in color and finish.

6.4.8 Hose Bibs

Per the Station Finishes Standard Drawings, standard flush hose bibs (quick-couplers) shall be located to allow full coverage of the platform, fare vending area(s), and circulation elements with a 75-foot hose using fresh water. Other areas shall be reachable by a 150-foot hose with fresh water.

6.4.9 Electrical Convenience Outlets

Per the Station Finishes Standard Drawings, 120V/20 amp GFI single-phase electrical service in weather-proof lockable receptacles shall be located to allow full coverage of the platform and circulation elements with a 75-foot electrical cord, and a 25-foot cord in the fare vending area(s). Provide 140V-1 Phase special purpose outlet with weatherproof lockable cover. METRO plaza and non-station site areas need not have electrical outlets. Mechanical and electrical rooms shall have coverage per code, manufacturers' and designers' recommendations.

6.4.10 Patron Information (Maps)

Provide a patron information center at each fare vending area when ticket vending is not directly adjacent to the platform (more than 30 feet horizontal travel distance), and at all station platforms. These centers shall include the following and comply with ADAAG Section 4.27:

- General information panel
- System map
- Neighborhood map (optional)
- Emergency Call Box (ECB) – can be separate from the system/neighborhood maps

6.4.11 Emergency Call Boxes (ECBs)

Locate one ECB at single point entry stations and provide for a second conduit at double entry stations for future use if needed. The ECB shall comply with ADAAG Section 4.31 on each platform, with a maximum travel distance of 200' to the nearest ECB from any point on the platform. ECBs shall be located near primary entry point to the platform. ECBs shall be highly visible, signed and accessible to the handicapped. The telephones on platforms have been eliminated and replaced with one Emergency Call Box. This is for direct emergency only communications between a passenger and the Operations Control Center, and it is located near the station entrance.

See Chapter 12, Communications, of this document, for additional information.

6.4.12 Closed Circuit Television Cameras (CCTVs)

CCTV cameras shall be located in accordance with CPTED guidelines and a minimum of 9 feet above finish floor elevation of the platform to prevent vandalism and theft. Locate CCTV cameras to be clearly visible by all and provide coverage of the following, and per the Station Finishes Standard Drawings, at:

- Fare vending areas
- Platform area
- Emergency Call Box – As a design goal, the camera covering the TVM's should be a pan-tilt-zoom camera that would automatically turn to cover the Emergency Call Box when it is activated.

In addition, if feasible and without adding cameras, adjust placement of cameras to provide coverage of following:

- Ancillary spaces

- Approach areas to stations
- Park-and-Rides (Garages)
- Transit Center Fare Box Area

See Chapter 12, Communications, of this document, for additional information.

6.4.13 Public Address System (PA)/Variable Message Boards (VMBs)

Per the Station Finishes Standard Drawings, the public address system (speakers) shall provide coverage for all platforms and fare vending areas. The system shall include a means of conveying the same or equivalent information to persons with hearing loss or who are deaf in compliance with ADA/ADAAG Section 10.3.1 (14) – by use of Variable Message Boards. See Chapter 12, Communications, of this document, for detailed information.

6.4.14 Art

Provisions for artwork shall be considered integral with the preliminary design phase of the stations and station areas. The placement of artwork shall comply with ADA ADAAG Section 4.2, 4.3 and 4.4 and all applicable codes. METRO will include public art consistently with the existing policy for funding art in each municipality.

6.5 Accessibility For Individuals With Disabilities

Federal law regulating accessibility for transit is contained in the Americans with Disabilities Act (ADA title II, III and ADAAG). METRO stations shall meet or exceed the minimum requirements for design and construction defined in the ADA regulations and the most current ADA transit accessibility guidelines (ADAAG). For technical ADA guideline drawings information see the illustrations contained in the Appendix A to part 37 – Standards for Accessible Transportation Facilities ADA Accessibility Guidelines for Buildings and Facilities. The design goal is to have 4'-0" clear at path of travel.

6.6 Lighting

Light level criteria and types of lamps are discussed in Chapter 15, Facilities Electrical. Light fixtures for platform illumination shall be incorporated into the integrated structural elements of the stations per the Station Finishes Standard Drawings and shall serve to illuminate signage as well as the platform edge, seating, fare vending areas and ramps. Walks, rail and pedestrian crossings, driveways and parking areas shall also fall within the scope of station lighting. Lighting system design shall ensure that no objectionable stray light and glare spills over to adjacent neighborhoods. Consideration shall be given to maintenance, bulb replacement, light distribution, and vandalism in the design and execution of the lighting system. Signage or architecture, that requires backlighting and unusual or unique lamps, and complicates spares procurement, shall be avoided.

6.7 Vertical Circulation

All stations require some form of vertical circulation. At-grade platforms shall have sloping sidewalks or ramps as vertical circulation. In general, sloping sidewalks (less than 5 percent slope) are preferred over ramps, and shall be used wherever feasible. Stairs are to be avoided as a primary means of vertical circulation at all applications.

The quantity, width, and distribution of stairs and/or ramps shall be determined per Subsection 6.3.5, Travel Lanes/Exit Lanes. In addition to meeting all applicable code requirements the following shall be incorporated into the design of any required public ramps or stairs.

- Minimum headroom clearance of 9 feet-0 inches measured vertically from the nose of stair
- Tread or ramp surface
- Maximum riser of 6.5 inches
- Minimum tread of 12 inches
- A cleanout trough 3 inches wide, flanking the stair treads and risers

6.8 Station Site

Layout of station access shall accommodate the following modes as necessary, given the location and patronage data for each station: pedestrian, bus, kiss-and-ride, park-and-ride, and rail. For bus interfaces, see the Valley Metro Passenger Facilities Handbook.

6.8.1 Pedestrian Access

Provide direct and safe pedestrian access. This is particularly important since all transit patrons ultimately approach the actual station on foot, regardless of mode of arrival to the station site. See the Urban Design Guidelines for further details. Consideration shall be given for additional sidewalk width for patron safety and ease of access.

- Walkways crossing rail tracks to reach station platform shall be level and maximum of 1/4 inch below the top of rail at the outer edge and between rails, except for a maximum 2-1/2 inch gap on the inner edge of rail to permit passage of wheel flanges. Such crosswalks cannot be provided with either curbs or railing, in compliance with ADA Technical Specifications.
- Pedestrian linkages shall be designed to allow Level-of-Service (LOS) "A" movements as defined by the Transportation Research Board Highway Capacity Manual (greater than 135 square feet per person or less than 7 persons per 1-foot width of sidewalk per minute).
- Pedestrian paths shall be located based on current or desired pedestrian movements. Sidewalks should be located where people want to go and be wide enough to accommodate efficient and quick access to the station platforms.
- Access to the station should be a pleasant and enjoyable experience. Development around the station should be transit orientated and be integrated into the pedestrian access to the station.

6.8.2 Bus

Bus connections provide a principal means of connecting to the METRO Rail System at many stations. Station platform locations need to optimize bus to rail transfer and encourage bus use to connect to the stations. Specific criteria include:

- Placement of bus stops near the rail platforms should be at the closest intersection where connection can be easily made optimized bus/rail connections.

- Visibility and ADA access are important factors in inter-modal design.
- Efficient bus circulation on-site and off-site to reduce time spent maneuvering buses from productive routes to platform interfaces.
- Separating bus circulation from conflicting and competing park-and-ride and kiss-and-ride movements.
- For additional bus interfaces, see the Valley Metro Passenger Facilities Handbook.

6.8.3 Bicycles

Provide one securable rack for four bicycles at street intersections adjoining the station entrance (not on the platforms) and lockers at Park-and-Ride/transit center locations conforming to TSS standards. Criteria for bicycle integration include:

- On-site and off-site identification of improvements needed to accommodate bicycle movements.
- Provide bike paths if possible, or extend existing bike lanes to connect to the station platform.
- Provide secure bicycle enclosures and racks in sufficient quantity at station areas where bicycle traffic is expected. Enclosures shall be sized to accommodate adult-size mountain bikes.
- Connect with pedestrian pathways and signage to Canal walkways where adjacent to station areas.
- At a minimum, 2 bike lockers and 2 sets of bike racks shall be provided at Transit Centers.
- At single ended stations, the local jurisdiction may request and pay for an extended platform length to accommodate the placement of two bike racks on the emergency end of the platform.

6.8.4 Kiss-and-Ride

Short term and convenient loading zones for dropping-off or picking-up passengers should be provided at designated stations, transit centers, park-and-ride facilities, and where space permits. This parking needs to be adjacent to the platform and visible from the station platforms and convenient to station site vehicular access and egress locations.

6.8.5 Park-and-Ride

Automobile parking will be provided in proximity to selected stations. For these stations the following general guidelines apply:

- Parking for the disabled at priority locations in close and accessible proximity to the bus/rail platforms.
- Vanpool and carpool parking shall comply with city codes and planning/zoning requirements near the bus/rail platforms.
- For additional bus interfaces, see the Valley Metro Passenger Facilities Handbook.

- CCTV monitoring system shall be provided.
- ETEL's shall be provided
- A security building
- Bike lockers/ bike racks
- Lighting

6.8.5.1 Parking for Individuals with Disabilities

Parking for individuals with disabilities shall be provided per Section A4.6 of the Americans with Disabilities Act Accessibility Guidelines (ADAAG). The number of parking spaces and type shall be per ADAAG and city codes whichever is greater.

6.8.5.2 Emergency Access

Access for emergency response by Fire Department and paramedic equipment and personnel shall be provided at station areas and Park-and-Ride facilities.

6.8.5.3 Site Layout

The layout of the park-and-ride lots, while naturally conforming to available site constraints, shall adhere to the following guidelines:

- Parking aisles with dead ends are undesirable. Provide turning space if necessary.
- Give preferential treatment in locating parking and access routes for high-occupancy vehicles.
- There shall be no entrance or exit collection controls for parking fees. Such fees, if instituted, will be collected by other means.
- Minimize points of conflict between pedestrians and vehicles. Sidewalks within the parking lots are not required, but peripheral walkways are essential for the most probable pedestrian routes.

6.8.5.4 Wheel Stops

Parking lots shall not include wheel stops, except when necessary to protect other elements such as artwork, trees, fences, light standards, etc., where standard curbs cannot serve the purpose.

Wheel stops may be used in conjunction with parking for individuals with disabilities, as necessitated by curb/ramp design.

6.8.5.5 Landscaping

Landscaping meeting local jurisdiction requirements within the parking lot shall consist of either low ground cover or trees without low limbs to enhance parking lot surveillance and security. See Chapter 14, Landscaping, of this document.

6.8.6 Fencing

Provide perimeter fencing around parking lot sites to enhance security. Pedestrian and vehicular gates are not required. The configurations of fencing and security walls shall be in compliance with the local jurisdiction's zoning codes, parking, and site development requirements.

6.8.7 Signing

Signing to give direction and information is one of the most important elements in the smooth functioning of the station. However, whenever possible, the architecture itself should simplify and direct passenger movement, per the Station Finishes Standard Drawings. For emergency purposes, the station addressing shall be clearly located with 8" lettering and lighted.

The type and style of signs, graphics, system maps and other directional instructions shall be uniform throughout METRO Projects for easy identification. Station identification signage shall meet the following criteria:

- For each 6 bay cooling screen – 2 station name signs per side
- For each 3 bay cooling screen – 1 station name sign per side
- Other bay configurations such as 4, 5, 7, and 8 in number – placement depends upon configuration of open bays, tall vine trellises and Variable Message Board locations.
- Where possible place station name sign above an open bay.
- No station name sign should be placed where the tall vine trellises would obscure their viewing.

Signing shall comply with the requirements of ADA and ADA Accessibility Guidelines (ADAAG) Section 4.30.

6.8.8 Landscaping

Selection of trees for the purpose of shade and cooling on the Station Platforms is based on several criteria, including shade density, form, width and height, maintenance requirements, and amount of water use. The criteria for trees that will be directly on the platform are different than those adjacent to or at the side of the platform. An approved list of trees is shown below.

For the 'Back of Platform Trees', any of the 'On Platform Trees' may be used. The reverse is not true; only the trees listed in the 'On Platform Trees' may be used on the platform.

6.8.8.1 Trees

A. On Platform Trees

Botanical Name	Common Name	Notes
Acacia aneura	Mulga	standard
Acacia jennerae	Coonavitta Wattle	standard
Acacia ligulata	Small Coobah	
Chilopsis linearis hybrid	Desert Willow	'Warren Jones', 'Lucretia Hamilton', 'AZT Desert Amethyst"
Chitalpa tashkinensis	Chitalpa hybrid	
Diaspora texanum	Texas Persimmon	
Geijera parviflora	Australian Willow	
Eysenhardtia orthocarpa	Kidneywood	
Pistacia lentiscus	Evergreen Pistache	

B. Back of Platform Trees

Botanical Name	Common Name	Notes
Acacia smallii	Sweet Acacia	Standard
Cercidium floridum	Blue Palo Verde	Standard
Cerdicium hybrid	Palo Verde	'Desert Museum'
Cercidium praecox	Palo Brea	
Phoenix dactylifera	Date Palm	Must be 15' clear of OCS wires
Prosopis hybrid	Thornless Mesquite	'AZT'
Prosopis juliflora	Native Mesquite	
Quercus virginiana 'Heritage'	Heritage Oak	
Quercus virginana var. fusiformis	Escarpment Live Oak	

Plus all 'On Platform Trees'

6.8.8.2 Station Vines

The following vines are ones that have been approved for use upon the station platforms. Any other vines must be tested for station application and approved by Valley Metro Rail. However, it is desirable that no more that eight different vine species be used in any line segment.

Botanical Name	Common Name
Antigonon leptopus	Coral Vine
Bougainvillea brasiliensis Horizontalis	Bougainvillea Brasiliensis
Cissus trifoliate	Arizona Grape Ivy
Ficus pumila	Creeping Fig
Macfadyena unguis-cati	Cat's Claw Vine
Mascagnia lilacina	Lavender Orchid Vine
Mascagnia macroptera	Yellow Orchid Vine
Merremia aurea '(Kellog) O'Donnell'	Yellow Morning Glory
Parthenocissus 'Hacienda Creeper'	Hacienda Creeper
Passiflora caerulea	Native Passion Vine
Podranea ricasoliana (tanfani) 'Sprague'	Pink Trumpet Vine
Rosa banksiae 'Alton'	Lady Bank's Rose
Vitus californica 'Roger Red'	California Grape

Vine selection should be based on the following criteria:

- Consistent, steady growth habit.
- Create minimal amount of debris.
- If the vine blooms, flowers or seeds must not stain.
- No part of the vine shall create a slippery environment under any weather condition.
- Select vines grown regionally that are readily available.
- No part of the vine shall cause rash or skin irritation.
- No thorns, spines or prickles of any kind.
- Does not require the use of chemicals to sustain health or growth.
- Should not attract bees, whiteflies or other undesirable insects.

6.9 Materials

The following basic requirements and criteria have been established for finishes in public areas within the system. While convenience, comfort, and attractiveness are to be considered in the selection and application of these finishes, safety, durability, minimal heat gain, and economy are essential attributes, which must be given priority. Identifiable hazards shall not be incorporated into the design. See the Station Finishes Standard Drawings and Urban Design Guidelines for additional requirements.

6.9.1 Safety

6.9.1.1 Fire Resistance and Smoke Generation

Hazards from fire shall be reduced by using finish materials with minimum burning, smoke generation and toxicity characteristics consistent with requirements as noted in governing building and NFPA Codes for flammability. The Cities of Phoenix, Tempe and Mesa have agreed that stations are not "buildings" and do not need to have fire sprinklers or fire extinguishers.

6.9.1.2 Attachment

Hazards from dislodgment due to temperature change, vibration, wind, seismic forces, aging, or other causes shall be reduced by using proper attachments and adequate bond strength.

6.9.1.3 Slip-Resistant Walking Surfaces

Pedestrian safety shall be increased and the presence of individuals with disabilities shall be recognized by using floor materials with slip-resistant qualities complying with ADAAG Section 4.5. The following static coefficients of friction as defined in ASTM C1028 shall be provided as a minimum:

	Coefficient of Friction
Public horizontal surfaces	0.6
Non-public horizontal surfaces, exterior	0.6
Non-public horizontal surfaces, interior	0.5
Platform edge strips	Textured visually contrasting material conforming to ADA/ADAAG Section 4.29
Stairs, ramps, sloping sidewalks	0.8
Area around equipment	0.6

6.9.1.4 Electrical Characteristics

The platform/safety edge strip shall be electrically insulated. No grounded metallic surface shall be installed within 5'-0" of the edge of the calculated platform edge.

6.9.1.5 Durability

Provide materials with excellent wear, strength, and weathering qualities with due regard for both initial and replacement costs. The materials must be colorfast, maintain their good appearance throughout their useful life, and be able to conform to the hot desert environment.

6.9.2 Ease of Maintenance

6.9.2.1 Cleaning

Facilitate cleaning and reduce cleaning costs by selecting materials that do not soil or stain easily, have surfaces that are easily cleanable in a single operation with the use of standard equipment and cleaning agents, and on which minor soiling is not apparent.

6.9.2.2 Repair or Replacement

Maintenance costs shall be minimized by using standardized materials that, if damaged, can be easily repaired or replaced without undue interference with the operation of the system. Spare quantities shall be provided for tile and other applied unit materials in an amount equal to approximately 2 percent of the total material used.

6.9.2.3 Resistance to Vandalism

Materials and details shall be provided that do not encourage vandalism and that are difficult to deface, damage or remove.

All surfaces exposed to the public shall be finished in such a manner that the results of casual vandalism can be readily removed with common maintenance techniques. Anti-graffiti coating shall be provided as necessary.

6.9.2.4 Color

Colors should be consistent with recommendations from the Station Finishes Standard Drawings, the Urban Design Guidelines, and the Climate, Comfort and Health Report, or compatible with other system wide criteria.

6.9.2.5 Unit Size

Units shall be large enough to reduce the number of joints yet small enough to facilitate replacement if damaged. Monolithic materials may be used if they can be easily repaired without the repair being noticeable.

6.9.2.6 Joints

Since joints are a major source of maintenance problems, small, flush joints, limited in number and of the non-absorbent materials, shall be provided. Installations for floors and walls shall have adequate control joints and expansion joints.

6.9.2.7 Installation Standards

Selected materials shall be detailed and specified to be installed in accordance with industry standards and manufacturer's printed directions for long life, low maintenance, and compliance with warranty requirements.

6.9.3 List of Potential Finish Materials

This list shall apply to all areas of public use and contact. The use of items listed as "acceptable' is subject to budget, location and environmental considerations. Color concrete shall be integrally dyed not surface applied or painted. Because of special conditions, items listed as "unacceptable" or "not acceptable" may be approved on a case-by-case basis if they meet the intent of this document and Urban Design Guidelines.

A. Platform Paving Materials

1. Acceptable – Light Colors

a. Monolithic materials

(a) Cement terrazzo (special hard aggregates, abrasive aggregates, and installation control); thickset installation. No polished surfaces shall be permitted.

(b) Textured-finish concrete.

(c) Stamped-pattern concrete

b. Unit materials (large units)

(a) Quarry tiles (non-slip).

(b) Paver brick (dense hard).

(c) Granite or other natural or manufactured comparable stone

(d) Selected artificial stone materials.

(e) Precast concrete.

2. Not Acceptable – Dark Colors

a. Monolithic materials

(a) Synthetic resin toppings

(b) Standard cement terrazzo

(c) Bituminous toppings

b. Unit Materials

(a) Resilient tile and sheet products

(b) Marble

(c) Carpet

(d) Wood products

B. Metallic Surfaces and Fixtures - railings (height and spacing in accordance with applicable codes and standards), posts, columns, fences, trash receptacles, bench supports, and miscellaneous metal. OCS Poles shall be consistent with each City's Urban Design/ Special District color specification.

1. Acceptable

a. Stainless steel (areas of high pedestrian use).

b. Color-anodized aluminum (where there is a low degree of pedestrian touch).

c. Stainless steel top rail with galvanized steel below.

d. Powder coated steel or aluminum (with field touch-up capabilities)

2. Not Acceptable

a. Field-painted metals.

C. Canopy Materials

1. Acceptable

a. Metal insulated panels

b. Teflon-coated fabric (Class A)

c. Other class A rated tensile fabrics (for canopy/lower skins only)

d. Factory molded panels: fiber re-enforced polyester or fiber reinforced cement (Class A)

2. Not Acceptable

a. Glass

b. Uncoated fabric

c. Ordinary plastics

d. Un-insulated metal panels

e. Wood or wood-based products

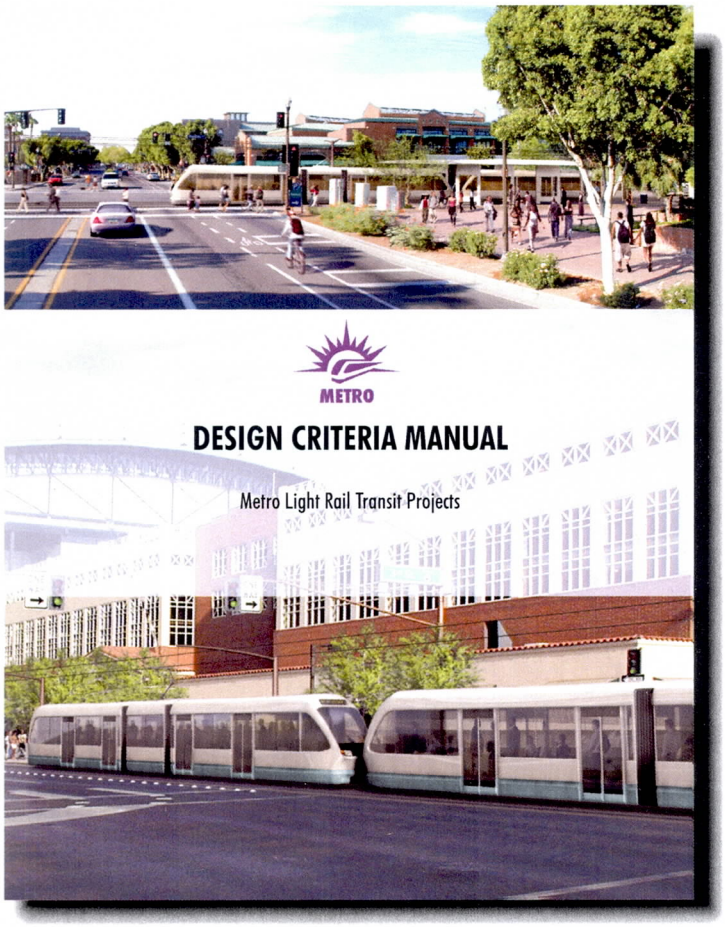

Chapter 7 .0

Operations

7.0 OPERATIONS

The purpose of this chapter is to establish the standards and design policies for the basic operations criteria to be used in the Preliminary Engineering and Final Design Phases of the METRO LRT Project. It encompasses operational objectives and function-based design criteria related to operations and maintenance planning issues.

This chapter should be considered a companion document to METRO's Rail Operations and Maintenance Plan (O&M Plan). The O&M Plan provides a more detailed discussion of operations and maintenance activities for the LRT system.

7.1 Operational Objectives

LRT System operations shall be designed, managed, operated, and maintained so that it will be attractive to passengers and the community-at-large (inclusive of the non-riding public) to ensure their continued patronage and support. Basic goals for METRO LRT operations are set forth in the Operations & Maintenance Plan, and are described as follows:

- Provide a safe, secure, reliable, and convenient LRT service within the region.
- Provide fully accessible transit (universal design) to the elderly and persons with disabilities.
- Improve access to employment at office/public/school/commercial/industrial sites located along the corridor.
- Provide improved service to the stadiums/arenas and for other special events sites within the service area.
- Increase the region's economic potential by improving mobility along the corridor.
- Meet the demands of population and employment growth within the corridor.
- Minimize the operating costs associated with the delivery of transit services.

The safety and well being of passengers, employees, and the neighboring communities shall be the first priority of METRO LRT system design efforts. All other concerns and considerations shall be secondary to safety and security.

Following safety and security, priority shall be given in the design of the METRO LRT system to operational reliability, passenger convenience, and cost-effectiveness, in that order.

7.2 Safety and Security Related Criteria

The first priority of operations is to provide for the safety and well being of passengers, employees, and the neighboring community. This section contains criteria related to promoting safe operations through good design practice during preliminary engineering and final design. Additional safety and security criteria are provided in Chapters 17 and 18, and in METRO's System Safety and Security Program Plans.

7.2.1 LRT Transportation

7.2.1.1 Control and Supervision Considerations

Regulation and supervision of train operations, and supervisory control of the associated electrical, mechanical, signal and communications subsystems, shall be performed by the operations staff located at the Operations Control Center (OCC). The OCC shall have responsibility for the control, coordination and monitoring of all train movements on main tracks, station operations, and any main track activities that may affect operations. The OCC shall be capable of at least direct verbal communication with all on-duty train operators and supervisory personnel at all times. Selected security, passenger information, and revenue control activities shall be controlled, coordinated, and monitored at the OCC, as appropriate.

Control systems in the OCC shall be capable of monitoring train operations, power, passenger activity, and other appropriate facilities statuses (intrusion, fire, etc.) under normal operating conditions without requiring direct intervention by the OCC staff. OCC response to service failures and anomalies shall include either automatically or manually initiated changes in system configuration, modifications of system operating strategies, and recovery operations. In all cases, OCC staff shall have the capability of manual OCC control, including overriding or modifying any automatically initiated system response. The design of the LRT system shall specifically include appropriate and practical means of informing passengers of usual and unusual conditions.

As determined by METRO, the secondary OCC shall have the same or similar functionality as the primary OCC.

7.2.1.2 Operational Considerations

LRT operations shall be designed and implemented based on METRO's operating procedures and practices, to the maximum extent possible.

When confronting a potentially unsafe condition, it shall be assumed for the purposes of design, that LRT operating employees will follow the safest course without regard to matters of service reliability, customer convenience, or cost.

7.2.1.3 Personnel Considerations

The Operating Plan for the METRO LRT system shall include the approach to LRT O&M employee development, including the following personnel requirements.

- All LRT operating employees shall be trained, certified, and regularly recertified with regard to operating procedures and practices directly related to their work.
- All LRT operating employees shall be trained, certified, and regularly recertified with regard to system safety and security.
- All "covered" (i.e., safety sensitive) LRT O&M employees shall be subject to a drug and alcohol testing program in accordance with USDOT regulation 49 CFR Part 655, and METRO's drug and alcohol program.

7.2.2 Light Rail Vehicles

LRVs shall be capable of operating as a train of one, two, or three vehicles in revenue service. Maximum-length LRT trains in revenue service shall not interfere with vehicle traffic on cross streets when the train is at rest during normal operating conditions.

LRVs shall be equipped with a normal braking capability for regular operations at a level as stated in Chapter 8, which shall take into consideration the safety and comfort of passengers standing on board the vehicle.

LRVs shall be equipped with emergency braking capability in which the maximum braking capability of the vehicle is applied in response to emergency conditions. Passenger ride comfort shall not be a consideration with regard to emergency braking.

Each LRV shall employ the use of onboard CCTV cameras providing the LRV operator with the capability to monitor the LRV passenger compartment, exterior sides of the LRV, and the coupler areas. Video from these cameras shall be retrievable, and recorded to an onboard medium having the capacity to store no less than 48 hours worth of data.

The interior passenger compartments of LRVs shall be equipped with emergency intercoms by which passengers can communicate directly with the train operator under such condition. The LRV operator shall have the capability to select from the cab console, and view on a cab console video screen, a CCTV image of the location from where the call is initiated in the passenger compartment of the LRV. The interior passenger compartments of LRVs shall be equipped with emergency intercoms by which passengers can communicate directly with the train operator under such condition.

The LRV Operator shall be provided the capability of activating a "silent alarm". Activation of this alarm shall alert the Operations Control Center of a problem on the train. Each LRV operator cab shall be equipped with the silent alarm, and it shall be conveniently located to the operator while in the normal operating position. The LRV silent alarm shall not cause any indication or warning on board the LRV that the alarm has been activated to OCC.

Additional safety and security-related LRV criteria concerning ventilation, fire/smoke monitoring/detection, audible announcements, sensitive edge door protection, etc., are provided in Chapter 8 of this manual.

7.2.3 Train Movements

All main tracks shall be considered an exclusive right-of-way operating environment unless specific physical conditions warrant a reduction in classification. The maximum authorized speed for train movements in exclusive right-of-way and semi-exclusive right-of-way operating environments shall not exceed 55 miles per hour, subject to civil limitations. The maximum authorized speed for train movements in a non-exclusive right-of-way operating environment shall not exceed the speed limit of the street that the R/W occupies, subject to civil limitations.

The maximum authorized speed for train movements through passenger stations shall not exceed 25 miles per hour, regardless of operating environment.

Train movements in an exclusive right-of-way operating environment shall be governed by operating schedule, operating rules, and signal indication. Train movements in a semi-exclusive right-of-way operating environment shall be governed by schedule, rules, intersection signals, and signal indications, supplemented by fixed signal indications as necessary in response to special circumstances. Train movements in a non-exclusive right-of-way operating environment shall be governed by schedule, rules, intersection signals, local traffic regulations, and signal indications, supplemented by fixed signal indications as necessary in response to special circumstances.

The perimeter of track areas shall only be fenced in areas of pedestrian traffic where trespassing is a significant concern (except in non-exclusive right-of-way operating environments, where no fencing shall be considered). The limits of bridges and elevated guideway at grade transitions should be monitored by intrusion detection and CCTV equipment, and supervised at the OCC.

When determined by METRO, encroachment detection shall be designed and installed wherever a freight railroad operates less than 50 feet from the LRT tracks (parallel and at the same grade). If the encroachment detection equipment involves the use of a fence, it shall indicate that the fence separating the rights-of-way has been penetrated and/or has been tilted more than 30 degrees. Upon detection of an intrusion, the signal system shall automatically initiate the most restrictive indication for the affected track segment.

7.2.4 Passenger Facilities

Passenger facilities shall be configured to provide a train operator arriving at the station with an unobstructed view of the platform and any walkways adjacent to the track.

Passenger platforms shall be sufficiently long enough to accommodate a maximum-length train. In general, passenger stations shall have sufficient area to accommodate peak hour demand. A minimum allowable passenger space allocation of seven (7) square feet per passenger, and the specific peak demand data, shall be considered when sizing passenger stations.

The egress path(s) from passenger platforms shall be sufficient to permit all passengers alighting from a peak train to reliably exit the platform area before the arrival of the next train. High volume passenger stations and terminals shall be subjected to a functional analysis to determine Station Capacity (C_S) relative to the Way Capacity (C_W) of its approaches. The number of platform tracks provided at all high volume passenger stations and terminals shall be sufficient to ensure that the C_S is equal to or greater than the C_W of its approaches.

Stations where passenger queues are anticipated to routinely exceed the available platform area (such as at stadium stations following a game) shall be subjected to a functional analysis of pedestrian and train movements to determine the maximum anticipated queue. Additional queuing areas, temporary train storage tracks, and special crowd control features should be considered at stations to ensure safety and aid crowd management following a special event. Separate boarding platforms and independent queuing systems should be provided at such stations where warranted by the functional analysis.

All stations shall be provided with accessible paths to and from all platforms in compliance with ADA regulations. The shortest and most heavily traveled path(s) connecting the station with the community shall be fully accessible to individuals with disabilities.

Pedestrian grade crossings should be combined with vehicle crossings wherever possible. Pedestrian grade crossings shall be situated so as not to be blocked by trains at a passenger station. Passenger stations in exclusive right-of-way and semi-exclusive right-of-way operating environments shall have no more than one pedestrian grade crossing. Passenger stations in a non-exclusive right-of-way operating environment shall have no more than two pedestrian grade crossings.

Passenger stations and park-and-ride lots shall be designed to allow camera and site views of patron areas for routine surveillance by security personnel. Passenger stations and park-and-ride lots shall be equipped with call-for-aid boxes or emergency telephones, by which passengers can communicate directly with the OCC.

7.2.5 Grade Crossings

Grade crossings in an exclusive right-of-way operating environment shall be equipped with automatic gate protection of the tracks, which shall have little or no effect on train performance. Grade crossings in semi-exclusive right-of-way and non-exclusive right-of-way operating environments may be equipped with automatic gate protection or intersection signals, width shall also govern LRT movements.

7.2.6 Regulatory Considerations

The LRT system shall be designed, constructed, and operated in conformance with all applicable federal and state laws, rules, and regulations.

7.3 Reliability Related Criteria

The second priority of operations is to provide a reliable, integrated network of transit services for the convenience of its passengers. This section contains criteria related to ensuring that operational reliability shall be sustained through good design practice during preliminary engineering and final design.

7.3.1 Service Reliability Tolerances

LRT operations shall be planned and implemented assuming an on-time performance of at least 95 percent during peak service periods, and 97 percent during base service periods. Non-Force Majeure equipment failure requiring removal of an LRT before the end of its revenue service run shall not exceed 0.1 percent at all times without impacting the service reliability index. As determined by METRO, LRVs not meeting the minimums for cleanliness and operability may not be considered "good" runs for the sake of service reliability calculations until such time the condition is corrected.

At the discretion of METRO, service reliability requirements at the beginning of revenue service for a new line or extension may be relaxed to preempt any service degradation resulting from the new operation.

7.3.2 Operational Considerations

7.3.2.1 LRT Transportation

Operational contingency plans shall be prepared early in the design process to satisfy system design requirements described in Section 7.3.2.6. These plans will be implemented in the event of abnormal operating conditions, and shall take into account a reasonably comprehensive cross section of disrupted service scenarios. Operational contingency plans shall be based on the premise of providing an immediate, preprogrammed response to a disrupted service scenario, with the capability of full field deployment, in no more than 15 minutes. Such contingency plans shall include LRT operations supplemented by buses, such as a bus bridge, where appropriate.

7.3.2.2 Intermodal Connections

Intermodal connections, such as rail to bus transfers or vice-versa, shall be protected to the maximum extent possible in the event of an abnormal operating condition. Such procedures shall be accounted for in operational contingency planning.

7.3.2.3 Light Rail Vehicles

In order to expedite boarding and alighting, LRVs shall be designed to accommodate level boarding with the station platform for all passengers. LRVs shall have a minimum effective door width of 48 inches. The interior of the car shall be designed to promote good passenger circulation and foster balanced distribution of passenger loadings under comfort and design passenger loading conditions.

7.3.2.4 Passenger Facilities and Fare Collection

Passenger station platforms shall be designed to accommodate level boarding with the LRV floor to expedite loading. In order to expedite passenger boarding and alighting, fare collection shall rely on a Proof-of-Payment (POP) system. Sales of fare instruments shall not be conducted on board LRVs. Sales shall primarily be conducted through ticket vending machines located at the entrances of the station platforms in designated non-fare paid areas. High value tickets, multiple ride tickets, monthly passes, and credit card sales will be possible. Verification of fare payment will be performed by roving fare inspectors performing random checks on board LRVs and in the designated fare-paid areas of the stations. All terminal passenger stations shall be equipped with secured space(s) accommodating employee toilet facilities, light cleaning supplies, and trash storage receptacles.

7.3.2.5 Main Tracks

A minimum of one track per direction shall be provided to the maximum extent possible. Single-track segments, in which movements in both directions share a common track under normal operating conditions, shall be avoided to the maximum extent possible. The length of single-track segments, if necessary, shall be as short as possible. Special work provided at either end of a single-track segment shall be designed to permit movements equal to the normal speed of adjoining track segments, to the maximum extent possible. The number and arrangement of main tracks shall be sufficient to support the maintenance of service and recovery during abnormal operating conditions, as operation requirements dictate.

7.3.2.6 Systems

Signals, communications and traction power systems shall have sufficient redundancies and reserve capacities to accommodate abnormal operating conditions anticipated in the operational contingency plan, as operations requirements dictate.

7.3.3 Preventive Maintenance Measures

7.3.3.1 Vehicle Maintenance

The LRV maintenance plan shall be based on a program of periodic preventive maintenance and the manufacturer's recommended maintenance program that will satisfy requirements of the warranty. The vehicle maintenance plan shall provide for scheduled light and heavy maintenance, and shall be based primarily on vehicle mileage.

7.3.3.2 Facilities and System Maintenance

The METRO Maintenance Of Way (MOW) Plan shall be based on a program of periodic preventive maintenance to proactively address the needs of all systems and fixed facilities. The plan shall provide scheduled service and inspection intervals for systems elements such as signals, OCC, radio and communications, and fare collection. The plan shall also provide scheduled service and inspection intervals for fixed facilities such as stations, trackwork, substations, overhead catenary, and structures. The plan shall include special service and inspections required by extreme weather such as excessive heat.

7.3.3.3 Reserved

7.3.3.4 Computerized Maintenance Management System

A Computerized Maintenance Management System (CMMS) shall be implemented to support all preventive maintenance scheduling throughout the LRT System. All scheduled and unscheduled maintenance, inventory control, and maintenance records management shall be processed through the use of this system. The system shall include a common database accessible by client computers, and allow end users to run custom-designed reports.

7.3.4 Preparatory Measures

7.3.4.1 Light Rail Vehicles

The LRV fleet requirements shall include a minimum spare factor of 15 percent above the peak car requirement of scheduled service for maintenance spares.

LRVs shall be equipped with high visibility, variable signage at the front, rear, sides, and interior of the vehicle. Such signage shall clearly and continuously indicate the route, destination, and service pattern of the train movement by a combination of text and color-coding. Messages communicated to passengers via such signage shall also be communicated to passengers audibly through the use of on-board announcements, as required by the Americans with Disabilities Act.

7.3.4.2 Passenger Facilities

Passenger stations shall be equipped with variable message signs adjacent to each track that shall be used to provide service and emergency information to waiting passengers. Messages communicated to passengers via such signage shall also be communicated to passengers audibly through the use of station announcements, as required by the Americans with Disabilities Act.

7.3.4.3 Main Tracks

Main tracks shall be designed to accommodate the normal speed of the applicable category of right-of-way to the maximum extent possible.

Two main tracks shall be provided for LRT operations to the maximum extent possible. Where more than one main track is provided, the normal direction of traffic assigned to each track shall be based on a "right-hand running" convention. However, trains shall be capable of running on any main track in either direction.

Where only a single main track can be provided, the length of a single-track segment shall be held to an absolute minimum and not exceed the distance necessary to reliably sustain scheduled service during the peak period. The design shall also consider growth in ridership and future decreasing headways during the peak period in determining the length of the single track segment. The *actual* acceptable lengths and locations for single main track segments shall be based on a reliable time-distance (string line) analysis of scheduled train movements. The following formula can be used to *estimate* the optimal maximum length of single-track segments:

$$\frac{\text{Average Operating Speed}}{\text{60 minutes}} \times \frac{\text{Peak Headway}}{2} \times 0.8 = \text{Maximum Length of Single Track Segments}$$

Single track running times shall be determined by measuring the running time of the train from the time that the entry interlocking becomes unavailable until the exit interlocking becomes available for subsequent train movements.

Turnouts at both ends of a single-track segment shall be capable of sustaining operating speeds equal to the normal speed of the adjoining track segments, to the maximum extent possible.

7.3.4.4 Junctions

Junctions shall be located, designed, and operated to provide reliable and efficient access between the main tracks of two or more LRT lines. Signals and other appliances at junctions shall be remotely operated from the OCC, and have the capability to be locally overridden and manually operated onsite. Special work provided at a junction shall be designed to permit movements equal to the normal speed of adjoining line segments to the maximum extent possible.

7.3.4.5 Terminals

Reversing train direction on main tracks in active revenue service shall be permitted under normal operating conditions.

A terminal facility with double crossovers to the front and rear of the passenger platform is preferred, allowing the facility to function as a stub or pullback terminal. If two double crossovers are not feasible, a pullback terminal with a double crossover located to the rear of the platform is preferable to a stub terminal. Simple stub terminals with only one double crossover to the front of the platform shall be avoided under normal operating conditions, except at the ends of lines or where there are special operational and schedule considerations.

The functional utility of a terminal shall be determined on a case-by-case basis through an operational analysis of the operating schedule at the terminal, the Way Capacity of its associated interlockings and tail tracks, and the Station Capacity of its associated passenger platform. As a general guideline, at least two tail tracks should be provided wherever a six-minute headway reverses direction. In the case of a stub terminal at the end of a line, platform tracks generally may function as tail tracks.

7.3.4.6 Crossovers

Crossover placement and spacing for a mainline configuration of two tracks should be established dependent on reliably sustaining scheduled service on a single-track segment during the base service period. The design shall also consider growth in ridership and future decreasing headways during the base period in determining crossover placement and spacing. The *actual* spacing and location of crossovers shall be based on a reliable time-distance (string line) analysis of scheduled train movements. The following formula can be used to *estimate* the optimal maximum distance between crossovers:

$$\frac{\text{Average Operating Speed}}{\text{60 minutes}} \times \frac{\text{Base Headway}}{2} \times 0.8 = \text{Optimal Distance between Crossovers}$$

Single track run times between crossovers shall be determined by measuring the running time of the train from the time that the entry interlocking becomes unavailable until the time the exit interlocking becomes available for subsequent train movements. This measurement should also be determined for reverse running on both tracks, with the slowest running times measured against the base service period headway discussed above.

Crossovers should be located as close as possible to a station platform on the side closest to the nearest end of line.

7.3.4.7 Yards and Auxiliary Tracks

To the maximum extent possible, yard movements and access to and from storage tracks shall not conflict with revenue train movements. Yard access shall be configured such that trains pulling into and out of revenue service are presented with at least two possible movement paths to/from each line that the yard borders. A buffer area should be provided at the yard entrances to the main tracks where a maximum-length train may dwell and vehicles can be added and cut so that such activities will not interfere with main track operations.

All daily storage of LRVs should be provided in a yard ideally situated to minimize deadhead time of revenue service LRVs. In the event that more than one yard is required to minimize operating costs, the smallest number of independent yard sites should be provided. The ideal number of yard sites for a particular system shall be determined by an operational analysis of LRT movements, balancing the desire to minimize deadhead mileage against the cost of supporting additional facilities.

LRV yard storage tracks should be located and distributed such that all train lengths scheduled in normal revenue service may be stored without uncoupling any trains. Yards of several shorter storage tracks are preferable to those of few very long tracks. Storage capacities of individual tracks should be multiples of maximum-length trains. A given yard should have a capacity equal to 130 percent of the LRV fleet to be stored at each particular location under normal operating conditions. Curved storage tracks should be avoided, and storage tracks should be accessible from either end, to the maximum extent possible.

Train operator reporting facilities shall be provided as close as possible to the storage yards. Walkways shall be provided between storage tracks to facilitate access by personnel and the movement of material, as required.

7.3.4.8 Shop and Vehicle Maintenance Tracks

Shop facilities shall be designed and operated to perform the required LRT vehicle diagnostics/maintenance functions necessary to provide safe and reliable LRT service. Shop facilities shall be located, where possible, to provide easy access to a yard storage location and good mainline connections. Maintenance facilities should be directly accessible from storage yards without crossing main tracks. LRV maintenance facilities shall have holding tracks of capacity equal to or greater than the shop's capacity.

7.3.5 Traction Power Systems

For the purpose of satisfying operational-related reliability criteria of this section, traction power systems shall be designed with sufficient capacity, redundancy, and reliability to support peak period operations under normal and contingency operating conditions.

7.4 Passenger Convenience Related Criteria

The third priority of operations is passenger convenience and comfort. This section contains criteria related to ensuring that convenient and efficient operations will be maintained through good design practice during preliminary engineering and final design.

7.4.1 Operational Planning Considerations

7.4.1.1 LRT Operating Speeds

The maximum authorized speed for LRVs in exclusive right-of-way and semi-exclusive right-of-way operating environments shall not exceed 55 miles per hour.

The maximum authorized speed for LRVs in a non-exclusive right-of-way operating environment shall not exceed the speed limit of the street that the R/W occupies.

7.4.1.2 LRT Service Configuration

LRT service shall be configured in routes designed to provide a one-seat ride for the greatest number of passengers, based on passenger demand. The overall number of discrete LRT routes shall be kept to a minimum.

The stopping patterns for a particular LRT route may vary as deemed appropriate in response to passenger demand. Variations in stopping patterns, however, shall be kept to a minimum for the convenience of the traveling public. Such variations in stopping patterns may be employed, as needed, to enhance travel times and/or operational effectiveness. They may include:

- Terminating selective movements at a station short of the regular terminus for a particular route (short-turning service);
- Operating selective movements past a series of stations without stopping (zone express service), and,
- Providing branch-line service as a discreet operation during selective service periods connecting with a through service (shuttle service).

Service patterns in which trains with common termini alternatively stop at every other station (skip-stop service) should be avoided unless warranted by limitations in line capacity. Choices in service patterns should be guided by the fact that service frequency at a given station has a greater influence on patronage than travel time.

7.4.1.3 LRT Level of Service

LRT service shall be sufficient to meet passenger demand with an appropriate combination of headways and train lengths.

For the purposes of operational planning, LRT service capacity shall accommodate peak demand, and such demand shall not exceed a comfort load standard of 156 passengers per LRV. During special events, a design load standard of 186 passengers per LRV shall be acceptable. The desirable LRV passenger-loading standard during base service periods shall be equal to a full-seated passenger load.

7.4.1.4 Intermodal Connections

The following objectives govern the development of the plans for intermodal connections:

- Provide transit routes and services that are responsive to identified passenger travel patterns.
- Minimize overall travel time for most passengers.
- Simplify the overall route structure.
- Avoid unnecessary disruptions of present routes and services without clearly demonstrated benefits.
- Maintain consistency with METRO or regional standards.
- Improve the overall operating efficiency of the METRO regional system.

Overall, LRT is intended to be the predominant mode of transit in the corridor it serves. Bus routes should be designed, where appropriate, to function as complementary and coordinated feeders and distributors for the line-haul service provided by the LRT. The process of coordinating an existing bus system with LRT service should be carefully undertaken on a station-by-station, route-by-route basis, balancing the concerns for extending travel times for through passengers with the need to minimize the walking distance and wait encountered by transferees.

General Guidelines

Bus and rail transit routes and services should be designed to maximize METRO system ridership, consistent with the following general guidelines:

- Overall travel times and travel opportunities should be maintained or improved for the majority of passengers using any route changed to accommodate LRT service.
- Overall, bus and rail operating costs should be minimized.
- Any proposed route change should have a reasonable expectation of being implemented in the context of local public and political considerations.

Scheduling Guidelines

Schedules for bus and rail transit routes should be coordinated to minimize the out-of-vehicle time experienced by transferees, and for maximum passenger convenience, consistent with the following guidelines.

Extraordinary measures to coordinate schedules should not be considered necessary for transfers connecting to routes operating at headways of ten minutes or less. Under these circumstances, service frequencies should be sufficient to ensure timely connections for intermodal transferees.

One of the following transfer coordination strategies should be considered when one or more connecting routes operate at headways greater than ten minutes:

- *Passive schedule coordination* synchronizes the headways of connecting and line-haul routes by adjusting operating schedules such that a connecting route passes through a station just prior to or following the scheduled arrival of the line-haul route, depending on the predominate flow of transfer traffic.
- *Dynamic schedule coordination pro*vides an enforced delay of the connecting route in the event of a delay on the line-haul route. As with passive schedule coordination, headways on the connecting routes are also synchronized with the line-haul route in dynamic schedule coordination.

Routing Guidelines

Bus routings should be designed to minimize convoluted routings and to maximize passenger convenience, consistent with the following guidelines.

An existing bus route that parallels the LRT line should be considered for rerouting, truncation or elimination if:

1) Overall, travel time for the majority of passengers using the existing parallel bus route (including transfer time) would be reduced.
2) The majority of passengers using the existing parallel bus route have origins or destinations within a quarter-mile of an LRT station.
3) The parallel bus routes would not function as a local distributor along the LRT alignment, synergistically complementing the express service provided by the LRT.

When a parallel bus route is truncated at an LRT station, its headways should be synchronized with LRT service, and an appropriate degree of schedule coordination should be considered.

An existing bus route that crosses an LRT line near a station site and is expected to carry a significant number of through passengers beyond the LRT station should be considered for rerouting to the LRT station consistent with the following guidelines:

- *Through bus route/Low orientation to LRT:* If the majority of passengers on board the route are not anticipated to transfer to LRT service, that bus route should not be rerouted to the station if that action would significantly prolong travel times for through passengers. When such a route can be rerouted to make the LRT station stop without significantly prolonging travel times for through passengers, bus headways should be synchronized with the LRT schedule, and the use of passive schedule coordination should be considered.
- *Through bus route/High orientation to LRT:* If the majority of passengers on board the route are anticipated to transfer to LRT service, that bus route should be rerouted to make the LRT station stop and accommodate transferees. In such cases, bus headways should be synchronized with the LRT schedule, and the use of passive schedule coordination should be pursued to the maximum extent possible. Some form of dynamic schedule coordination should be considered to a degree that would not significantly prolong travel times for through passengers.

An existing bus route that terminates at or near an LRT station site, or an existing bus route that crosses an LRT line in the vicinity of a station site and is not expected to carry a significant number of through passengers beyond the LRT station, is a potential candidate for rerouting to, and truncation at, the LRT station, consistent with the following guidelines:

- *Terminating bus route/Low orientation to LRT*: If the majority of all passengers using the route are not anticipated to transfer to LRT service, the bus should be rerouted to the station and bus headways should be synchronized with LRT. Passive schedule coordination should be considered to the maximum extent possible without disrupting service reliability for passengers elsewhere on the bus route. Space should be provided for these buses as close as possible to the station platform to accommodate any intermodal transferees that may occur.

- *Terminating bus route/High orientation to LRT:* If the majority of all passengers using the route are anticipated to transfer to LRT service, such a route should be considered as a dedicated feeder route for LRT. In such cases, that bus route should be rerouted to the station, and bus headways should be synchronized with LRT. Dynamic schedule coordination should be pursued to positively enforce connections. Premium space should be provided for these buses as close as possible to the station platform to accommodate intermodal transferees.

Where an existing bus route terminates in the general vicinity of an LRT station site (but not at the site) and is expected to carry a significant number of passengers that would use the LRT service, that route should be considered for rerouting to the LRT station if it was determined to be cost-effective.

The potential for concentrating bus routes at key stations should be considered, where possible, to maximize the opportunities for bus-to-bus transfers.

7.4.2 Light Rail Vehicles

LRV performance shall provide an optimized combination of acceleration, deceleration, and maximum operating speed sufficient to provide passengers with a high degree of ride comfort and the fastest possible travel time.

7.4.3 Passenger Facilities

Station platforms shall be designed to accommodate level boarding with LRV trains to expedite passenger boarding and alighting, as well to accommodate the mandates of the Americans with Disabilities Act (ADA). Passenger stations shall have a series of seating and waiting areas with canopies and trees for shading.

Beyond the ends of the platforms, there shall be controlled walkways across the track. In general, this control shall be by means of pedestrian crossing traffic signals, coordinated with operating rules for the LRVs. Additional control measures shall be considered if there is a perception of unique circumstances.

All stations shall be designed with ramp access in accordance with the ADA. Passenger platforms shall be set 14 inches above the top of the rails, the same level as the floor in the center portion of the light rail vehicles. Most stations will have a single center platform situated between the two tracks. Some stations will have two side platforms, one serving each track.

Fare collection equipment shall be situated in designated non-fare paid areas at station entrances that correspond with an entering passenger's most direct path to boarding LRVs.

An effective path for buses shall be provided through a station environment, where appropriate, that is direct and will not add significant travel time for through bus passengers.

Direct access to the LRT passenger platforms by other transit modes shall be prioritized based on the passenger carrying capacity of a particular mode and the length of time a vehicle will remain in the station environment. As such, the most direct and proximate access to the LRT platform should be afforded to bus transit, followed by paratransit (allowing for ADA considerations), kiss-and-ride passengers, taxicabs, and park-and-ride passengers.

7.5 Operational Cost-Effectiveness

The fourth priority of operations is cost-effectiveness. This section contains criteria related to ensuring that operating and capital costs shall be minimized through good design practice during preliminary engineering and final design.

7.5.1 Operational Planning Considerations

7.5.1.1 Service Effectiveness

LRT train lengths shall be adjusted as needed to minimize operating expense, consistent with LRT loading standards, passenger demand, and O&M contractual obligations, as required.

The location and number of LRV storage areas and train operator report locations shall be optimized to minimize operating expense.

All aspects of operations, including service planning, equipment, and facilities, shall be designed to accommodate maximum passenger trip volumes.

7.5.1.2 Operating Expense

LRT operating plans, services, and contracts shall be designed to minimize operating costs while maximizing service effectiveness.

Opportunities for contracting operations or support services to private sector contractors will be considered wherever cost-effective. Decisions regarding the use of outside contractors shall be based on several factors, including:

- Frequency of need;
- Amount and cost of special equipment;
- The need for specialized skills and training;
- The cost of self-performing the service vs. the cost of subcontracting the service;
- The availability of the service from the private sector; and
- The speed with which the service is needed to meet operational goals.

7.5.1.3 Capital Expense

LRT operating plans and services shall be designed to minimize future capital costs.

7.5.2 Maintenance Planning Considerations

7.5.2.1 Maintenance Effectiveness

All facilities should be designed to minimize routine maintenance requirements. All facilities should be constructed of durable, easily maintained materials. Particular consideration should be given to the prevention of vandalism and to ease the rapid repair of any vandalism that may occur.

7.5.2.2 Operating Expense

LRT maintenance plans and facilities shall be designed to minimize operating costs.

Opportunities for contracting equipment and way maintenance, as well as support services, to private sector contractors shall be considered wherever cost-effective. Decisions regarding the use of outside contractors shall be based on several factors, including:

- Frequency of need;
- Amount and cost of special equipment;
- The need for specialized skills and training;
- The cost of self-performing the service vs. the cost of subcontracting the service;
- The availability of the service from the private sector; and
- The speed with which the service meets operational goals.

7.5.2.3 Capital Expense

LRT maintenance plans and facilities shall be designed to minimize future capital costs and the frequency of major rehabilitation and repair.

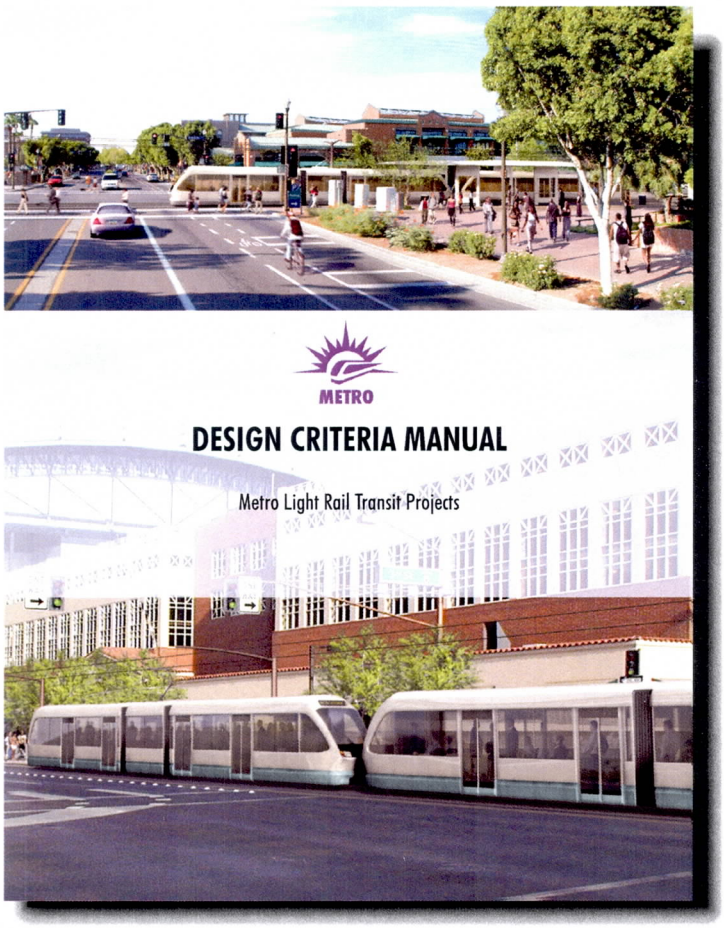

Chapter 8 .0

Vehicle

Table of Contents

8.0 VEHICLE 8-1

8.1 TRACKWORK CHARACTERISTICS 8-1

8.2 POWER SYSTEM CHARACTERISTICS 8-2

8.3 GENERAL VEHICLE CHARACTERISTICS 8-2

8.3.1 General 8-2
8.3.2 Operating Characteristics 8-4
8.3.3 Critical Vehicle Dimensions 8-4
8.3.4 Passenger Doors 8-6
8.3.5 Wheel Dimensions 8-6
8.3.6 Truck Dimensions 8-6
8.3.7 Wheel Profile 8-6
8.3.8 Anticlimbers 8-7
8.3.9 Bumpers 8-7
8.3.10 Couplers 8-7
8.3.11 Controlled Collapse Cab 8-8
8.3.12 Vehicle Management System 8-8

8.4 VEHICLE DYNAMIC SWEPT ENVELOPES 8-9

8.4.1 Vehicle Static & Dynamic Envelope on Level, Tangent Track 8-9
8.4.2 Vehicle Dynamic Envelope on Curved Track 8-10

8.5 VEHICLE WEIGHT AND DESIGN LOADING 8-19

8.6 VEHICLE PERFORMANCE 8-20

8.6.1 Supply Voltage 8-20
8.6.2 Operation Under Reduced Voltage 8-20
8.6.3 Maximum Line Current 8-21
8.6.4 Acceleration 8-21
8.6.5 Service Braking 8-21
8.6.6 Emergency Braking 8-21
8.6.7 Parking Brake 8-22
8.6.8 Operating Speed 8-22
8.6.9 Duty Cycle 8-22
8.6.10 Annual Average Mileage 8-22
8.6.11 On-Board Diagnostics 8-22

8.7 PASSENGER COMFORT 8-22

8.7.1 Heating Ventilation and Air Conditioning 8-22
8.7.1.1 General 8-22

8.7.1.2 Temperature Control 8-23
8.7.1.3 Interior Fresh Air Intake 8-24
8.7.1.4 Interior Air Filtration 8-24
8.7.1.5 Interior Positive Pressurization 8-25
8.7.1.6 Interior Maximum Air Velocity 8-25
8.7.1.7 Design Temperatures 8-25
8.7.1.8 Cooling Loads 8-25
8.7.2 Noise Levels 8-26
8.7.2.1 Interior Noise 8-26
8.7.2.2 Exterior Noise 8-26
8.7.2.3 Wheel Squeal Prevention 8-26
8.7.3 Ride Comfort 8-27
8.7.4 Interior Lighting 8-27
8.7.5 Interior Design 8-27
8.8 RELIABILITY 8-28
8.9 MAINTAINABILITY 8-28

List of Figures

Figure 8-1: METRO Kinkisharyo LRV General Arrangement 8-3
Figure 8-2: Wheel Profile 8-7
Figure 8-3: Vehicle Static and Dynamic Envelope on Level, Tangent Track 8-10
Figure 8-4: Body Point Identification – Front 8-11
Figure 8-5: Body Point Identification – Length, Width, Centers 8-12
Figure 8-6: ASHRAE Summer and Winter Comfort Zones 8-24

List of Tables

Table 8-1: NJT Hudson-Bergen 70% Low Floor LRV - KinkiSharyo 8-13
Table 8-2: Hiawatha Minneapolis-St. Paul 70% Low Floor LRV - Bombardier 8-14
Table 8-3: S70 93 foot 70% Low Floor LRV - Siemens 8-15
Table 8-4: Vehicle Outswing Values – Ballasted Track 8-16
Table 8-5: Vehicle Inswing Values – Ballasted Track 8-17
Table 8-6: Vehicle Outswing Values – Non-Ballasted Track 8-18
Table 8-7: Vehicle Inswing Values – Non-Ballasted Track 8-19
Table 8-8: Vehicle Weights for Design Purposes 8-20
Table 8-9: Reliability Requirements 8-28
Table 8-10: Weighted Average of MTTR Values 8-29

8.0 VEHICLE

The purpose of this chapter is to establish the standards and design requirements of the basic functional, operational, and physical characteristics of the low-floor light rail vehicle (LFLRV). It is intended to provide sufficient information to allow design development during the Preliminary Engineering phase, and develop estimates of capital, operating, and maintenance costs.

The LRV should meet the aesthetic intent of the CP/EV LRT Urban Design Guidelines of June 2001.

Definitions:

Vehicle: The smallest passenger carrying unit that can operate independently.

Train: A set of one or more vehicles coupled together and operated as a single unit or consist.

All vehicles provided for the initial and subsequent fleets shall be essentially identical and shall operate interchangeably in any train and on any part of the System.

8.1 Trackwork Characteristics

The following provides the basic track limitations under which the vehicle or train will operate in revenue passenger service. For further details see Chapter 2.

• Minimum horizontal curve radius	82 feet
• Minimum vertical curve radius, crest	820 feet
• Minimum vertical curve radius, sag	1,150 feet
• Simultaneous vertical and horizontal curve radii	82 feet horizontal 820 feet vertical
• Maximum horizontal distance between track centerline and platform	56.0 inches + 0.00 / - 0.125 inches
• Vertical height from top of rail to top of platform edge	14.0 inches + 0.00 in / - 0.125 in
• Rail types	115 RE, RI-53N
• Rail cant, except for special trackwork sections	1:40
• Minimum frog number	4
• Maximum track superelevation	6.0 in
• Maximum unbalanced superelevation	3.0 in
• Maximum gradient	Failed vehicle retrieval – 4% Normal operation – 7%

8.2 Power System Characteristics

The following provides the basic overhead catenary / power system limitations under which the vehicle or train will operate in revenue passenger service. For further details see Chapter 10.

• Maximum sustained supply voltage	900 VDC
• Nominal supply voltage	750 VDC
• Minimum sustained supply voltage	525 VDC
• Maximum rail to ground voltage	50 VDC
• Pantograph operating height above top of rail, with any vehicle loading from AW0 to AW4, and new to fully worn wheels	23.0 ft maximum 13.0 ft minimum
• OCS Stagger	±12 in maximum from centerline of track
• Collector head overall width:	77.95 in with horizontal collector surface of 42.0 in minimum
• Collector carbon length:	42.0 in minimum

8.3 General Vehicle Characteristics

8.3.1 General

The vehicle shall be air conditioned, double articulated and have, as a minimum, two main passenger compartments joined to form one single operating unit with a minimum 70 percent low-floor to allow level boarding from low level station platforms.

The vehicle shall be inter-operable with the vehicles in METRO's existing fleet provided by Kinkisharyo, LLC. Inter-operability shall include the ability to operate both types of vehicle in a single train, and the compatibility of all system functionalities. The General Arrangement of METRO's existing LRT vehicle is shown in Figure 8-1.

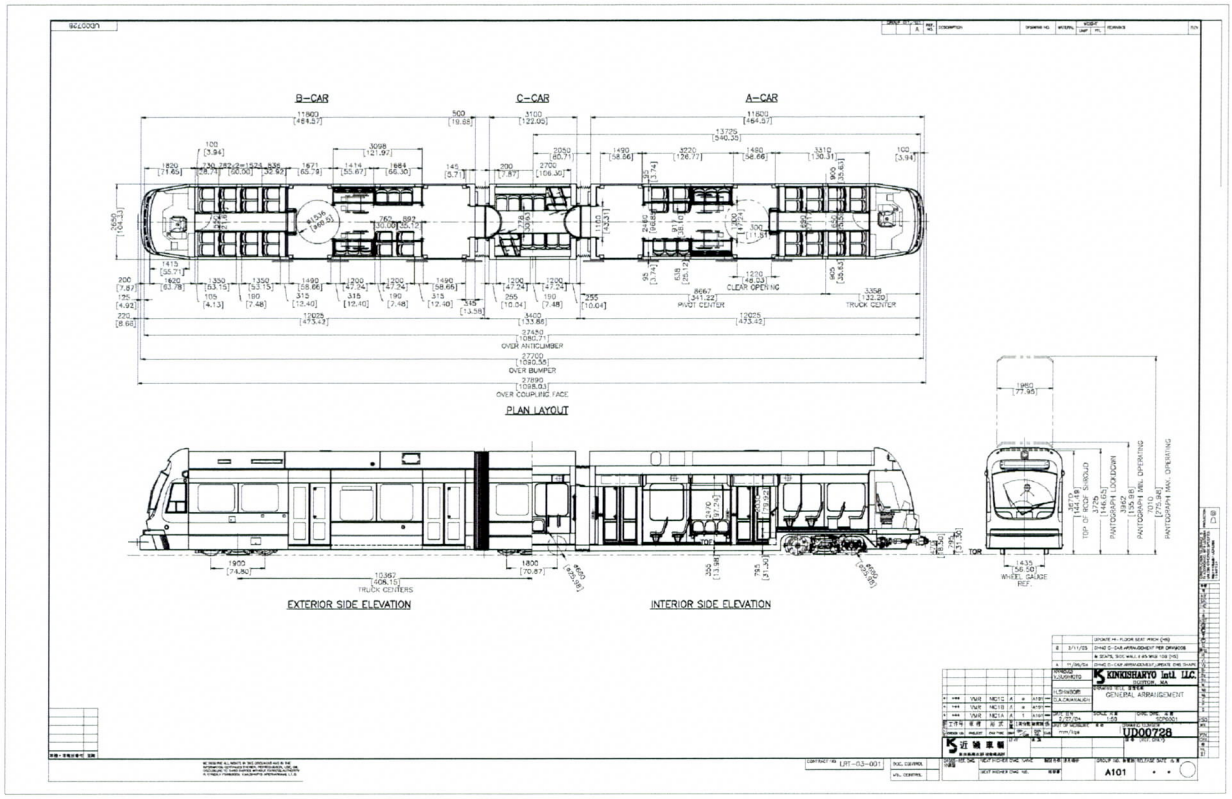

Figure 8-1: METRO Kinkisharyo LRV General Arrangement

Eight (8) bi-parting passenger doors shall be located within the low-floor area, four (4) per side directly opposite the doors on the other side. Other designs may be considered, if sufficient passenger flow can be achieved to permit ease of passenger movement and minimized passenger contact. Additional specific door requirements are defined in Section 8.3.4.

ADA compliance is required for all aspects of the vehicle design and construction.

The fire safety design and construction of the vehicle shall be in compliance with all applicable vehicle-related requirements of NFPA 130 (2003).

There shall be no less than 68 passenger seats (including all tip-ups), with a preference for additional seating. All passenger seating shall be suitable for use by a US 5th percentile female and 95th percentile male. In particular, the knees of a 95th percentile male shall not be in contact with the seat back of the seat in front of him when seated. To ensure this, the distance from the buttocks of the seated passenger to the seat back in front of him shall not be less than 28 inches.

Each vehicle shall provide accommodations for at least four wheelchairs and four bicycles.

The heating, ventilation, air conditioning (HVAC) system shall be high performance / energy efficient and suitable for the METRO LRT system area conditions. Additional specific HVAC system performance requirements are defined in Section 8.7.1.

The vehicle shall be bi-directional with fully equipped cabs at each end. Each cab end shall be equipped with energy absorbing bumpers and retractable, energy absorbing automatic couplers as detailed in Sections 8.3.9 and 8.3.10. The cab end structures shall also be capable of absorbing collision energy in event of a major collision as per Section 8.3.11.

Communication systems shall include voice and data radio, train-to-wayside radio communications, public address, variable message destination and information signs, automatic pre-recorded announcements, video side mirrors, vehicle passenger area video recording, cab-to-cab intercom and a passenger emergency intercom as per Section 8.3.12.

The vehicle design shall include and utilize in its construction as much "service-proven" and "off-the-shelf" technology as possible.

The design service life of the vehicle shall be no less than 30 years.

The operator's cab shall be ergonomically designed to address clear line of sights, easy access to all controls, and seating shall be designed to minimize fatigue, shock impact, and over extension of arms and legs.

The vehicle shall be of a modern and attractive design in harmony with existing METRO LRT System vehicles.

8.3.2 Operating Characteristics

The vehicle shall be capable of full performance multiple-unit operation in consists of up to three (3) vehicles during normal daily operations. Under emergency conditions, a consist of up to six (6) vehicles, 3 of which may be inoperable and without power or only partially operational, shall be capable of operating under reduced performance.

8.3.3 Critical Vehicle Dimensions

The following are the nominal limiting major dimensions for the METRO LRT light rail vehicle:

	Min	Max
• Length of three car train (over bumpers, couplers folded):		281.0 ft
• Distance between bumper of first car and the trailing edge of the rearmost door on the third car of a three car train:		Less than or equal to 260.0 ft. All doors must be fully on the platform at Washington and Jefferson with the vehicle bumper no more than 6 in past the end of the platform. This distance must also include an allowance of at least 1.0 ft to account for vehicle stopping accuracy.
• Overall width of vehicle:	104.3 in	105.5 in

	Min	Max
• Width of vehicle at passenger door thresholds:		107.7 in
• Clear width of passenger side doors:	48.0 in	52.0 in
• Clear height of passenger side doors:		77.9 in minimum 79.9 in preferred
• Height of low floor area at vehicle entrance above top of rail:		14.0 in nominal
• Maximum height of low floor area above top of rail		As low as possible, not to exceed 15.75 in
• Height of high floor above top of rail		As low as possible, not to exceed 39 in
• Under-floor clearance:		7.87 in minimum (vehicle edge), 5.12 in minimum (vehicle center)
• Height of vehicle from top of rail to top of pantograph • (locked in down position):		152.0 in maximum
• Interior height: center-line floor to ceiling:		80.0 in minimum
• Truck / vehicle clearance (excepting wheels and track brake), normal operating conditions of maximum wheel wear and primary suspension settlement:		2 in minimum above top of rail
• Truck / vehicle clearance (excepting wheels and track brake), worst-case conditions of wheel wear and suspension failure.		1.25 in minimum above top of rail
• Track gauge		4 ft 8.5 in [56.5 in]
• Wheel gauge		56.00 in
• Wheel profile		As per Figure 8-2
• Anticlimber height		As per Section 8.3.8
• Shock absorbing bumper height:		From14 to 26 in above top of rail
• Coupler height:		As per Section 8.3.10
• Maximum vehicle roll angle		3.5 degrees
• Dynamic swept envelope:		As per Section 8.4

8.3.4 Passenger Doors

It shall be possible to completely unload a vehicle loaded at AW2 in 25 seconds or less through the doors on one side only, under the assumption that one passenger per 1.5 seconds can be unloaded through each 25-inch unit of clear width at each doorway. It shall not be possible to entrap fingers, hands or clothing between door panels and adjacent fixed sections while doors are opening or closing.

All passenger doors shall be fully glazed and of the two-panel, sliding-plug type.

The door panels shall be flush with the car body when closed. Closed door panels shall seal to prevent the ingress of water during the car wash operation, or proceeding at maximum speed in revenue service under the worst case climatic conditions.

The door control system shall be trainlined so that the Operator can open, close, or enable all left side, all right side or all passenger doors in the consist independently from the operating cab. All door control circuits for one side of the car shall be separate and distinct from those for the other side of the car.

All door controls and pushbutton illumination circuits shall be electrically interlocked with the no-motion circuit, which shall permit the doors to be electrically opened only when vehicle no-motion is detected.

All vehicle doors shall have an obstruction-sensing/door reopening feature. Doors shall be automatically mechanically locked when fully closed. All vehicle doors shall have an emergency release mechanism on both the interior and exterior of the vehicle to unlock and open the door panels manually without vehicle power and without the use of a key or similar device.

No door panel shall exert a closing force in excess of 30 pounds for the full range of door motion, even when the reopening feature has been deactivated or has failed. The kinetic energy of each vehicle door panel, including all parts rigidly connected to the door and computed for the average closing speed, shall not exceed 7 foot-pounds. When the door reopening feature is no longer active, just before door closure, the kinetic energy, as computed above, shall not exceed 2.5 foot-pounds.

8.3.5 Wheel Dimensions

Vehicle wheel diameters shall be between 24.8 inches to 28 inches in diameter. The wheels shall be the same diameter on all axles of the vehicle and shall be interchangeable.

8.3.6 Truck Dimensions

The vehicle truck wheelbase shall be within the range of 67 to 75 in.

The lead truck center to first articulation joint center distance shall be between 27 ft. 11 in. and 32 ft. 6 in., depending on vehicle design. Variations from these dimensions may be accepted if inter-operability with METRO's LRT vehicles is achieved.

8.3.7 Wheel Profile

The vehicle wheel profile shall be in accordance with KinkiSharyo drawing 3-UC02270 as follows in Figure 8-2.

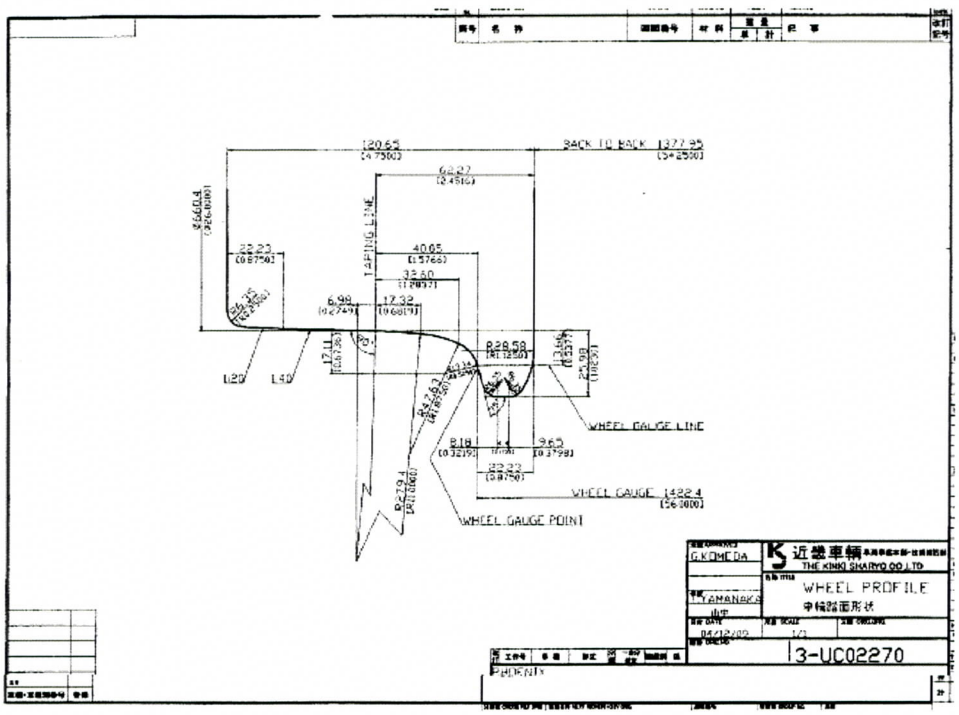

Figure 8-2: Wheel Profile

8.3.8 Anticlimbers

The centerline of the vehicle's anticlimbers shall be 31.3 inches above top of rail so as to engage the anticlimbers on existing vehicles.

8.3.9 Bumpers

The bumper energy absorbing assembly shall prevent any vehicle structural damage for collision speeds up to 5 mph between two AW2-loaded vehicles. The anticlimbers shall be so designed that two out of three anticlimber ribs, under a vertical load of +/- 40,000 lbs, combined with a 90,000 lb. longitudinal load uniformly applied, shall remain fully intact and cause no permanent deformation of the carbody structure.

8.3.10 Couplers

Automatic couplers shall be provided on both ends of each vehicle. The mechanical coupler and all electrical trainline connections shall be compatible with existing Dellner couplers on METRO's existing LRT vehicles, including high speed data lines. The mechanical coupler centerline shall be located 18.5 inches above top of rail. The following requirements shall apply.

A. A positive lock shall assure that the coupler, once engaged, cannot release without prior, on-board release of this lock.

B. All required electrical connections shall be accomplished automatically during a mechanical coupling and shall be disconnected automatically during a mechanical uncoupling. Upon uncoupling, all required electrical shall be protected by automatically deployed weather- and moisture-resistant covers.

8.3.11 Controlled Collapse Cab

The operator's cab structure shall collapse in a controlled manner to absorb excess collision energy not absorbed by bumpers and/or couplers.

The cab shall be designed to absorb at least 285,000 ft-lb of energy by means of a controlled collapse in a distance of between 20 to 28 inches.

8.3.12 Vehicle Management System

Each vehicle shall be provided with an integrated Vehicle Management System (VMS) that includes the following elements which shall be compatible with vehicle based systems currently supplied by GeoFocus on existing METRO LRT vehicles:

- Voice and Data Radio System
- GPS/AVL System
- Vehicle Information Controller
- Exterior forward facing and platform monitoring Video Cameras / Recorder
- Wireless LAN System
- Interior passenger monitoring Video Cameras / Recorder
- Silent and standard alarms

Control and monitoring of the VMS system shall only be available from the active cab of a train.

The VMS system will control all the sub-systems listed below and provide the functionality identified.

VMS communications between light rail vehicles and the existing Operations Control Center (OCC) subsystems provided by GEACS, shall utilize the METRO agreed, non-proprietary, open published data radio communications protocol currently established by GeoFocus.

The VMS system via the Vehicle Information Controller shall directly control the following on board vehicle subsystems:

- PA System
- Passenger Information Displays
- Auto-Announcer
- Destination Displays
- Automatic Flange Lubrication System

In addition, the VMS system shall interface with the vehicle Maintenance and Diagnostic System (MDS).

All VMS controlled systems shall be trainlined to allow control by the active VMS system in all vehicles of the train.

Provisions shall also be made for the future installation of a multi-media display and advertising system such as AGATE e-Media or similar.

Automatic passenger counting equipment compatible with existing DILAX APC equipment shall be also provided.

Control of turnouts from each cab shall also be provided using Train to Wayside Control (TWC) equipment equivalent to that currently supplied by Hanning and Kahl.

8.4 Vehicle Dynamic Swept Envelopes

In order to maximize the flexibility of the system, a composite vehicle swept envelope has been developed which incorporates the known critical dimensions and characteristics of three recently built 70% low floor, double articulated, light rail vehicles, namely:

- NJT Hudson-Bergen / Newark City Subway LRVs built by KinkiSharyo
- Hiawatha Minneapolis-St. Paul LRVs built by Bombardier
- S70 93 foot long version LRVs, subsequently built for Charlotte by Siemens

The resulting swept envelope for each of the three vehicle types has then been individually calculated on both tangent, level track and on a variety of curves with various super-elevations on both ballasted and non-ballasted track. The worst case swept point out of these calculations is then identified for each permutation and included in the final combined worst case swept envelope tables presented in this section.

When the track clearance envelope requirements are calculated as per Chapter 2.3, Track Clearance Requirements and applied to the system, the system will then be capable of accommodating any current US 70% low floor vehicle that is 93 feet long or less, thus maximizing the Agency's ability to accommodate vehicles from more than one builder in future.

The vehicle dynamic swept envelope for all new vehicles shall not exceed the worst case limits identified in the following diagrams and tables.

8.4.1 Vehicle Static & Dynamic Envelope on Level, Tangent Track

The Vehicle Static and Dynamic Envelope begins with the three vehicle composite cross sectional outline of the vehicle standing (static) on level, tangent track, such as at a station platform. The dynamic outline of the vehicle is then developed by considering the carbody movements that can occur when the vehicle is moving (dynamic) on level, tangent track. These dynamic (sway) movements come from the truck suspension elements, wheel and rail wear, and tolerances in vehicle and track construction. These worst case, not to exceed static and dynamic body movements are shown in the following Vehicle Static & Dynamic Envelope diagram, Figure 8-3.

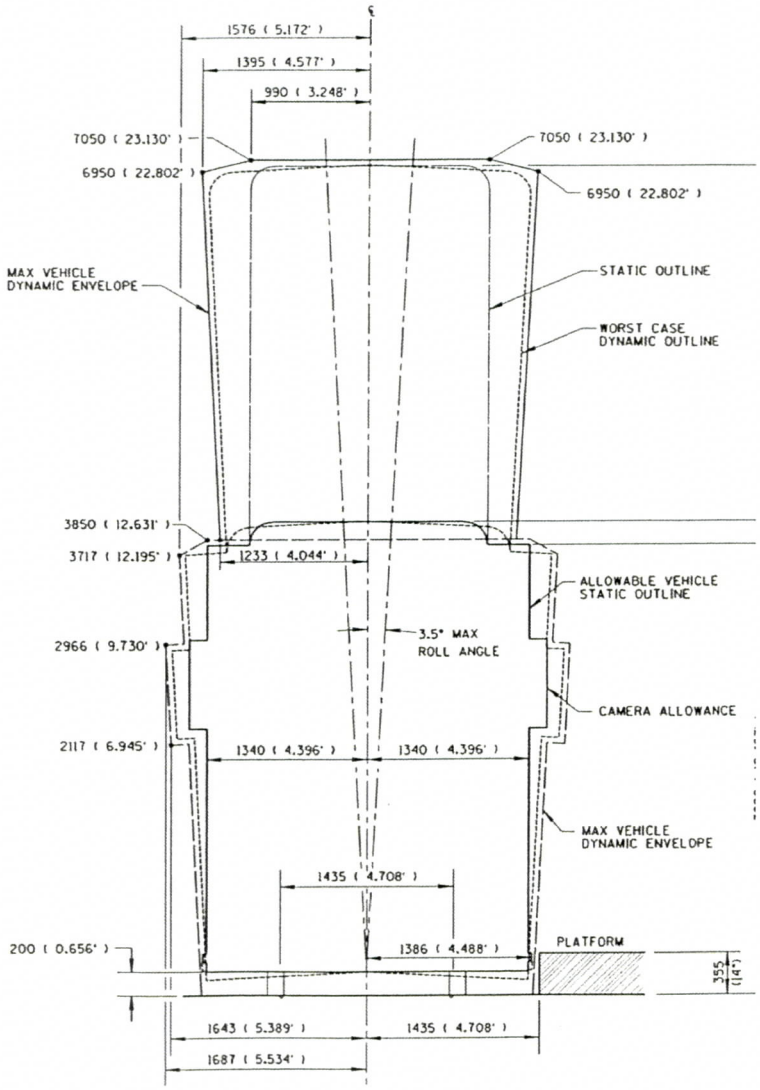

Figure 8-3: Vehicle Static and Dynamic Envelope on Level, Tangent Track

8.4.2 Vehicle Dynamic Envelope on Curved Track

In addition to the dynamic car body movements on level, tangent track described in Section 8.4.1, car body overhang on horizontal curvature also increases the lateral displacement of dynamic outline relative to the track centerline depending on the radius of the curve, the cross level variation, the degree of track superelevation, the wheel and track tolerances, the suspension motion, and the method of track construction, ballasted or non-ballasted.

In determining the superelevation effects, the shape of the vehicle dynamic outline has not been altered and the effects have been limited to the vehicle lean introduced by the specified difference in elevation between the two rails of the track under consideration.

The key vehicle characteristics used in these calculations were identified using a standard set of measurement points as identified below in Figures 8-4 and 8-5 and recorded in the following Tables 8-1, 8-2, and 8-3.

The resulting worst case dynamic outswing and inswing values on ballasted and non-ballasted track are given in Tables 8-4, 8-5, 8-6 and 8-7. These tables shall be utilized in Chapter 2.3 as the Vehicle Dynamic Envelope (VDE) in establishing the Track Clearance envelope (TCE).

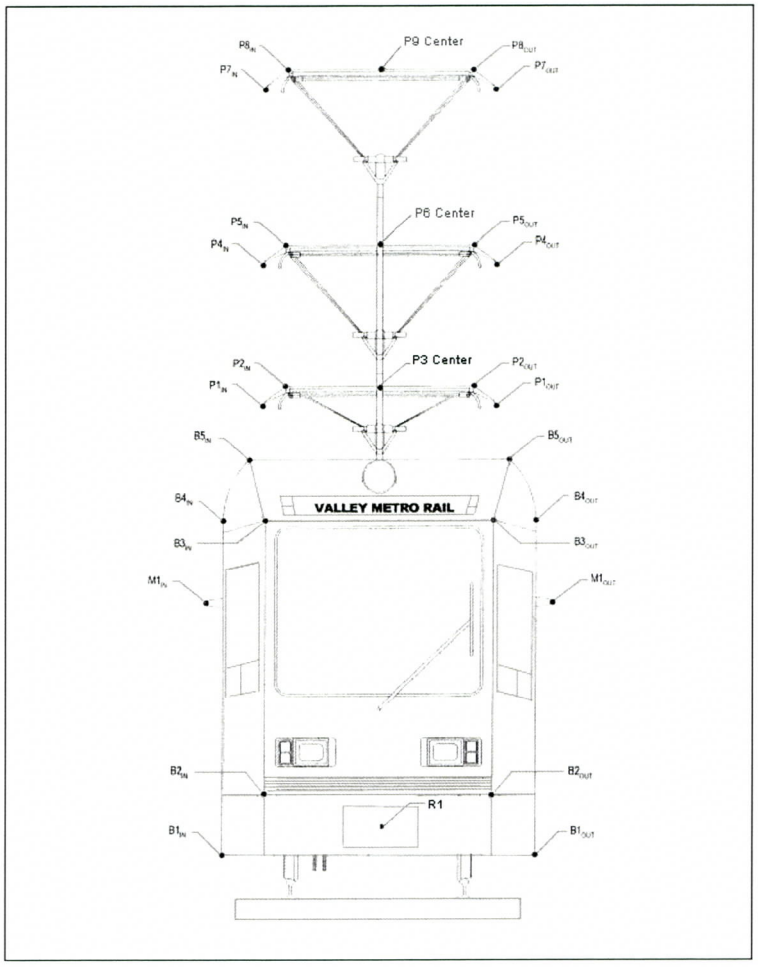

Figure 8-4: Body Point Identification – Front

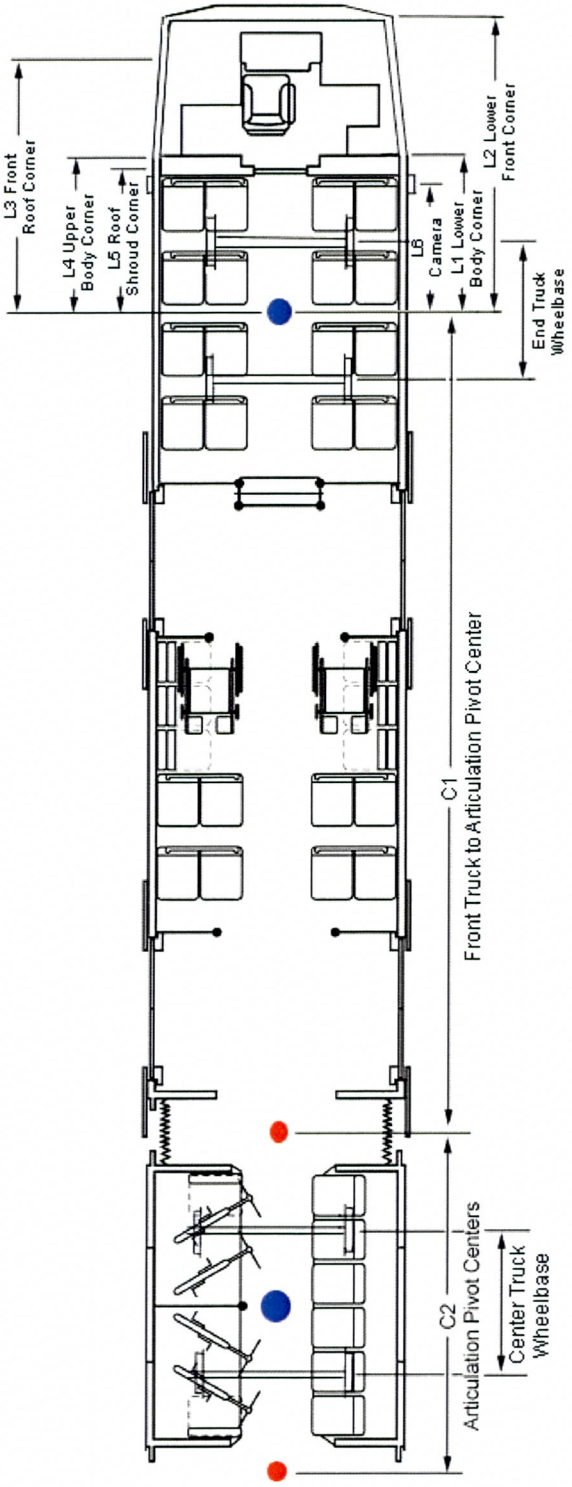

Figure 8-5: Body Point Identification – Length, Width, Centers

Table 8-1: NJT Hudson-Bergen 70% Low Floor LRV - KinkiSharyo

	BODY POINTS	X	Y	X	Y
R1	Static Roll (mm)	0.0 mm	420.0 mm	0.0 in	16.5 in
B1 in	Lower body corner	1340.0 mm	210.0 mm	52.8 in	8.3 in
B2 in	front end bumper	900.0 mm	730.0 mm	35.4 in	28.7 in
B3 in	Front roof Corner	900.0 mm	3110.0 mm	35.4 in	122.4 in
B4 in	Roof Line	980.0 mm	3630.0 mm	38.6 in	142.9 in
B5 in	Roof Shroud	1115.0 mm	3110.0 mm	43.9 in	122.4 in
M1 in	Camera	1458.0 mm	2337.0 mm	57.4 in	92.0 in
P1 in	Pantograph	990.0 mm	4090.0 mm	39.0 in	161.0 in
P2 in		800.0 mm	4267.0 mm	31.5 in	168.0 in
P3 center	Center	0.0 mm	4267.0 mm	0.0 in	168.0 in
P4 in		990.0 mm	5310.0 mm	39.0 in	209.1 in
P5 in		800.0 mm	5486.0 mm	31.5 in	216.0 in
P6 center	Center	0.0 mm	5486.0 mm	0.0 in	216.0 in
P7 in		990.0 mm	6835.0 mm	39.0 in	269.1 in
P8 in		800.0 mm	7010.0 mm	31.5 in	276.0 in
P9	Center	0.0 mm	7010.0 mm	0.0 in	276.0 in
C1	Pivot Center Length		8521.7 mm	335.5 in	
C2	Articulation Centers		3400.0 mm	133.9 in	
TC	Truck Centers		10221.7 mm	402.4 in	
End Truck Wheelbase			1900.0 mm	74.8 in	
Center Truck Wheelbase			1800.0 mm	70.9 in	
Body Roll Angle			**4.00 deg**		
Pantograph Sway			25.4 mm	1.0 in	
P9 - B5 = Length of Panto			3900.0 mm	153.5 in	
Pantograph Roll Angle			**0.37 deg**		
Track Gauge			1435.0 mm	56.5 in	
Rail Head Width			69.0 mm	2.7 in	
Total Rail Width			1504.0 mm	59.2 in	
1/2 of Total Rail Width			752.0 mm	29.6 in	
TRUCK & RAIL Tolerance		Horizontal	-Vertical	+Vertical	
Wheel Wear		8	0	0	
Rail Wear		13	0	0	
Rail Gauge Tolerance (half)		3	0	0	
Wheel Gauge Tolerance (half)		1	0	0	
Nominal sideplay (half)		10	0	0	
Lateral Suspension Motion:		34	0	40	
Total		69	0	40	

LENGTH			WIDTH	
L1 1895.0 mm	74.6 in	W1	2680.0 mm	105.5 in
L2 3220.0 mm	126.8 in	W2	1800.0 mm	70.9 in
L3 3220.0 mm	126.8 in	W3	1800.0 mm	70.9 in
L4 1895.0 mm	74.6 in	W4	1960.0 mm	77.2 in
L5 1895.0 mm	74.6 in	W5	2230.0 mm	87.8 in
L6 1454.0 mm	57.2 in	W6	2916.0 mm	114.8 in

Table 8-2: Hiawatha Minneapolis-St. Paul 70% Low Floor LRV - Bombardier

	BODY POINTS	X	Y	X	Y
R1	Static Roll (mm)	0.0 mm	412.0 mm	0.0 in	16.2 in
B1 in	Lower body corner	1325.0 mm	210.0 mm	52.2 in	8.3 in
B2 in	front end bumper	950.0 mm	730.0 mm	37.4 in	28.7 in
B3 in	Front roof Corner	1123.5 mm	3110.0 mm	44.2 in	122.4 in
B4 in	Roof Line	938.0 mm	3630.0 mm	36.9 in	142.9 in
B5 in	Roof Shroud	1123.5 mm	3110.0 mm	44.2 in	122.4 in
M1 in	Camera	1440.0 mm	2825.0 mm	56.7 in	111.2 in
P1 in	Pantograph	990.0 mm	4090.0 mm	39.0 in	161.0 in
P2 in		800.0 mm	4267.0 mm	31.5 in	168.0 in
P3 center	Center	0.0 mm	4267.0 mm	0.0 in	168.0 in
P4 in		990.0 mm	5310.0 mm	39.0 in	209.1 in
P5 in		800.0 mm	5486.0 mm	31.5 in	216.0 in
P6 center	Center	0.0 mm	5486.0 mm	0.0 in	216.0 in
P7 in		990.0 mm	6835.0 mm	39.0 in	269.1 in
P8 in		800.0 mm	7010.0 mm	31.5 in	276.0 in
P9	Center	0.0 mm	7010.0 mm	0.0 in	276.0 in

C1	Pivot Center Length	10100.0 mm	397.6 in
C2	Articulation Centers	1400.0 mm	55.1 in
TC	Truck Centers	10800.0 mm	425.2 in
End Truck Wheelbase		1900.0 mm	74.8 in
Center Truck Wheelbase		1800.0 mm	70.9 in
Body Roll Angle		**4.00 deg**	

Pantograph Sway	25.4 mm	1.0 in
P9 - B5 = Length of Panto	3900.0 mm	153.5 in
Pantograph Roll Angle	**0.37 deg**	

Track Gauge	1435.0 mm	56.5 in
Rail Head Width	65.0 mm	2.6 in
Total Rail Width	1500.0 mm	59.1 in
1/2 of Total Rail Width	750.0 mm	29.5 in

TRUCK & RAIL Tolerance	Horizontal	-Vertical	+Vertical
Wheel Wear	8	0	0
Rail Wear	13	0	0
Rail Gauge Tolerance (half)	3	0	0
Wheel Gauge Tolerance (half)	1	0	0
Nominal sideplay (half)	10	0	0
Lateral Suspension Motion:	34	0	40
Total	69	0	40

	LENGTH			WIDTH	
L1	1818.0 mm	71.6 in	W1	2650.0 mm	104.3 in
L2	3220.0 mm	126.8 in	W2	1900.0 mm	74.8 in
L3	2407.0 mm	94.8 in	W3	2247.0 mm	88.5 in
L4	2407.0 mm	94.8 in	W4	1876.0 mm	73.9 in
L5	1259.0 mm	49.6 in	W5	2247.0 mm	88.5 in
L6	1634.0 mm	64.3 in	W6	2880.0 mm	113.4 in

Table 8-3: S70 93 foot 70% Low Floor LRV - Siemens

	BODY POINTS	X	Y	X	Y
R1	Static Roll (mm)	0.0 mm	450.0 mm	0.0 in	17.7 in
B1 in	Lower body corner	1325.0 mm	210.0 mm	52.2 in	8.3 in
B2 in	front end bumper	984.0 mm	730.0 mm	38.7 in	28.7 in
B3 in	Front roof Corner	1056.8 mm	3110.0 mm	41.6 in	122.4 in
B4 in	Roof Line	919.8 mm	3630.0 mm	36.2 in	142.9 in
B5 in	Roof Shroud	1056.8 mm	3110.0 mm	41.6 in	122.4 in
M1 in	Camera	1440.0 mm	2428.0 mm	56.7 in	95.6 in
P1 in	Pantograph	990.0 mm	4090.0 mm	39.0 in	161.0 in
P2 in		800.0 mm	4267.0 mm	31.5 in	168.0 in
P3 center	Center	0.0 mm	4267.0 mm	0.0 in	168.0 in
P4 in		990.0 mm	5310.0 mm	39.0 in	209.1 in
P5 in		800.0 mm	5486.0 mm	31.5 in	216.0 in
P6 center	Center	0.0 mm	5486.0 mm	0.0 in	216.0 in
P7 in		990.0 mm	6835.0 mm	39.0 in	269.1 in
P8 in		800.0 mm	7010.0 mm	31.5 in	276.0 in
P9	Center	0.0 mm	7010.0 mm	0.0 in	276.0 in

C1	Pivot Center Length	8205.0 mm	323.0 in
C2	Articulation Centers	4040.0 mm	159.1 in
TC	Truck Centers	10225.0 mm	402.6 in
End Truck Wheelbase		1900.0 mm	74.8 in
Center Truck Wheelbase		1800.0 mm	70.9 in
Body Roll Angle		**4.00 deg**	

Pantograph Sway	25.4 mm	1.0 in
P9 - B5 = Length of Panto	3900.0 mm	153.5 in
Pantograph Roll Angle	**0.37 deg**	

Track Gauge	1435.0 mm	56.5 in
Rail Head Width	65.0 mm	2.6 in
Total Rail Width	1500.0 mm	59.1 in
1/2 of Total Rail Width	750.0 mm	29.5 in

TRUCK & RAIL Tolerance	Horizontal	-Vertical	+Vertical
Wheel Wear	8	0	0
Rail Wear	13	0	0
Rail Gauge Tolerance (half)	3	0	0
Wheel Gauge Tolerance (half)	1	0	0
Nominal sideplay (half)	10	0	0
Lateral Suspension Motion:	34	0	40
Total	69	0	40

LENGTH		WIDTH	
L1	1800.0 mm 70.9 in	W1	2650.0 mm 104.3 in
L2	3690.0 mm 145.3 in	W2	1968.0 mm 77.5 in
L3	2400.0 mm 94.5 in	W3	2113.6 mm 83.2 in
L4	1800.0 mm 70.9 in	W4	1839.6 mm 72.4 in
L5	1800.0 mm 70.9 in	W5	2113.6 mm 83.2 in
L6	1510.0 mm 59.4 in	W6	2880.0 mm 113.4 in

Radius (feet)	Superelevation (inches)												
	0.0	0.5	1.0	1.5	2.0	2.5	3.0	3.5	4.0	4.5	5.0	5.5	6.0
	Outswing	Outswing	Outswing	Outswing	Outswing	Outswing	Outswing	Outswing	Outswing	Outswing	Outswing	Outswing	Outswing
82	81.1	80.1	79.2	78.3	77.4	76.4	75.5	74.5	73.6	73.2	72.9	72.6	72.4
95	79.6	78.7	77.8	76.8	75.9	75.0	74.0	73.1	72.1	71.1	70.2	69.2	68.5
100	79.1	78.2	77.3	76.4	75.4	74.5	73.6	72.6	71.6	70.7	69.7	68.7	67.7
150	76.0	75.0	74.1	73.2	72.3	71.3	70.4	69.4	68.5	67.5	66.5	65.5	64.6
200	74.3	73.4	72.4	71.5	70.6	69.6	68.7	67.7	66.8	65.8	64.8	63.9	62.9
250	72.5	71.6	70.7	69.7	68.8	67.9	66.9	66.0	65.0	64.0	63.1	62.1	61.2
300	72.5	71.6	70.7	69.7	68.8	67.9	66.9	66.0	65.0	64.0	63.1	62.1	61.2
400	71.6	70.7	69.8	68.8	67.9	67.0	66.0	65.1	64.1	63.1	62.2	61.4	60.6
500	71.0	70.1	69.2	68.3	67.3	66.4	65.5	64.5	63.5	62.6	61.8	61.0	60.2
550	70.8	69.9	69.0	68.1	67.1	66.2	65.2	64.3	63.3	62.5	61.7	60.9	60.0
600	70.7	69.7	68.8	67.9	67.0	66.0	65.1	64.1	63.2	62.4	61.5	60.7	59.9
700	70.4	69.5	68.6	67.6	66.7	65.8	64.8	63.9	63.0	62.2	61.4	60.5	59.7
800	70.2	69.3	68.3	67.4	66.5	65.6	64.6	63.7	62.8	62.0	61.2	60.4	59.6
900	70.0	69.1	68.2	67.3	66.3	65.4	64.4	63.5	62.7	61.9	61.1	60.3	59.5
1000	69.9	69.0	68.1	67.1	66.2	65.3	64.3	63.4	62.6	61.8	61.0	60.2	59.4
1200	69.7	68.8	67.9	66.9	66.0	65.1	64.1	63.3	62.5	61.7	60.9	60.0	59.2
1250	69.7	68.8	67.8	66.9	66.0	65.0	64.1	63.2	62.4	61.6	60.8	60.0	59.2
1450	69.5	68.6	67.7	66.8	65.8	64.9	64.0	63.1	62.4	61.6	60.7	59.9	59.1
1500	69.5	68.6	67.7	66.8	65.8	64.9	63.9	63.1	62.3	61.5	60.7	59.9	59.1
2000	69.3	68.4	67.5	66.6	65.6	64.7	63.8	63.0	62.2	61.4	60.6	59.8	58.9
2500	69.2	68.3	67.4	66.4	65.5	64.6	63.7	62.9	62.1	61.3	60.5	59.7	58.9
3200	69.1	68.2	67.3	66.3	65.4	64.5	63.6	62.8	62.0	61.2	60.4	59.6	58.8
5000	69.0	68.1	67.1	66.2	65.3	64.3	63.5	62.7	61.9	61.1	60.3	59.5	58.7
10000	68.9	67.9	67.0	66.1	65.2	64.2	63.4	62.7	61.9	61.1	60.2	59.4	58.6
50000	68.8	67.8	66.9	66.0	65.1	64.2	63.4	62.6	61.8	61.0	60.2	59.4	58.5
Tangent	68.7	67.8	66.9	66.0	65.0	64.1	63.4	62.6	61.8	61.0	60.2	59.3	58.5

Basic Assumptions / Criterion:

1. Cross level variation: 1.0 inch.
2. All values are in inches measured from the track centerline.
3. Values worst case calculated values.
4. Maximum vehicle roll angle is 4°.
5. Vehicles are fitted with cameras, not mirrors.
6. Composite envelope derived from the following current production 70% low floor LRVs (KinkiSharyo Hudson Bergen, Bombardier Hiawatha, Siemens 93 ft S70).
7. Calculations include wheel and track tolerances including wheel wear, track wear, rail gauge tolerance, wheel gauge tolerance, nominal sideplay and lateral suspension motion.

Table 8-4: Vehicle Outswing Values – Ballasted Track

Radius (feet)	Superelevation (inches)												
	0.0	0.5	1.0	1.5	2.0	2.5	3.0	3.5	4.0	4.5	5.0	5.5	6.0
	Inswing	Inswing	Inswing	Inswing	Inswing	Inswing	Inswing	Inswing	Inswing	Inswing	Inswing	Inswing	Inswing
82	77.2	78.2	79.2	80.3	81.3	82.3	83.3	84.3	85.3	86.3	87.3	88.3	89.3
95	74.3	75.3	76.3	77.4	78.4	79.4	80.4	81.4	82.4	83.4	84.4	85.4	86.4
100	73.4	74.4	75.4	76.4	77.5	78.5	79.5	80.5	81.5	82.5	83.5	84.5	85.5
150	67.7	68.7	69.7	70.7	71.8	72.8	73.8	74.8	75.8	76.8	77.8	78.8	79.8
200	64.9	65.9	66.9	67.9	68.9	69.9	70.9	71.9	72.9	74.0	75.0	75.9	76.9
250	65.0	65.8	66.5	67.4	68.3	69.2	70.1	71.0	71.9	72.8	73.7	74.6	75.5
300	65.0	65.8	66.5	67.4	68.3	69.2	70.1	71.0	71.9	72.8	73.7	74.6	75.5
400	65.8	66.6	67.5	68.5	69.4	70.3	71.2	72.1	73.0	73.8	74.7	75.6	76.5
500	66.3	67.3	68.2	69.1	70.0	70.9	71.8	72.7	73.6	74.5	75.4	76.2	77.1
550	66.6	67.5	68.4	69.3	70.2	71.1	72.0	72.9	73.8	74.7	75.6	76.5	77.3
600	66.7	67.7	68.6	69.5	70.4	71.3	72.2	73.1	74.0	74.9	75.8	76.6	77.5
700	67.0	67.9	68.9	69.8	70.7	71.6	72.5	73.4	74.3	75.2	76.1	76.9	77.8
800	67.3	68.2	69.1	70.0	70.9	71.8	72.7	73.6	74.5	75.4	76.3	77.2	78.0
900	67.4	68.3	69.2	70.2	71.1	72.0	72.9	73.8	74.7	75.5	76.4	77.3	78.2
1000	67.6	68.5	69.4	70.3	71.2	72.1	73.0	73.9	74.8	75.7	76.6	77.5	78.3
1200	67.8	68.7	69.6	70.5	71.4	72.3	73.2	74.1	75.0	75.9	76.8	77.7	78.5
1250	67.8	68.7	69.6	70.5	71.4	72.3	73.2	74.1	75.0	75.9	76.8	77.7	78.6
1450	67.9	68.8	69.7	70.7	71.6	72.5	73.4	74.3	75.2	76.1	76.9	77.8	78.7
1500	68.0	68.9	69.8	70.7	71.6	72.5	73.4	74.3	75.2	76.1	77.0	77.9	78.7
2000	68.1	69.1	70.0	70.9	71.8	72.7	73.6	74.5	75.4	76.3	77.2	78.1	78.9
2500	68.3	69.2	70.1	71.0	71.9	72.8	73.7	74.6	75.5	76.4	77.3	78.2	79.1
3200	68.4	69.3	70.2	71.1	72.0	72.9	73.8	74.7	75.6	76.5	77.4	78.3	79.2
5000	68.5	69.4	70.3	71.2	72.1	73.0	73.9	74.8	75.7	76.6	77.5	78.4	79.3
10000	68.6	69.5	70.4	71.4	72.3	73.2	74.1	75.0	75.9	76.7	77.6	78.5	79.4
50000	68.7	69.6	70.5	71.5	72.4	73.3	74.2	75.1	76.0	76.8	77.7	78.6	79.5
Tangent	68.7	69.7	70.6	71.5	72.4	73.3	74.2	75.1	76.0	76.9	77.8	78.6	79.5

Basic Assumptions / Criterion:

1. Cross level variation: 1.0 inch.
2. All values are in inches measured from the track centerline.
3. Values worst case calculated values.
4. Maximum vehicle roll angle is 4°.
5. Vehicles are fitted with cameras, not mirrors.
6. Composite envelope derived from the following current production 70% low floor LRVs (KinkiSharyo Hudson Bergen, Bombardier Hiawatha, Siemens 93 ft S70).
7. Calculations include wheel and track tolerances including wheel wear, track wear, rail gauge tolerance, wheel gauge tolerance, nominal sideplay and lateral suspension motion.

Table 8-5: Vehicle Inswing Values – Ballasted Track

Radius (feet)	Superelevation (inches)												
	0.0	0.5	1.0	1.5	2.0	2.5	3.0	3.5	4.0	4.5	5.0	5.5	6.0
	Outswing	Outswing	Outswing	Outswing	Outswing	Outswing	Outswing	Outswing	Outswing	Outswing	Outswing	Outswing	Outswing
82	79.5	78.5	77.6	76.7	75.7	74.8	73.8	73.2	73.0	72.7	72.4	72.2	71.9
95	78.0	77.1	76.1	75.2	74.3	73.3	72.4	71.4	70.4	69.4	68.6	68.3	68.0
100	77.5	76.6	75.7	74.7	73.8	72.8	71.9	70.9	69.9	69.0	68.0	67.1	66.8
150	74.4	73.4	72.5	71.6	70.6	69.7	68.7	67.8	66.8	65.8	64.8	63.8	63.0
200	72.7	71.7	70.8	69.9	68.9	68.0	67.0	66.1	65.1	64.1	63.1	62.1	61.1
250	70.9	70.0	69.0	68.1	67.2	66.2	65.3	64.3	63.3	62.3	61.5	60.6	59.8
300	70.9	70.0	69.0	68.1	67.2	66.2	65.3	64.3	63.3	62.3	61.5	60.6	59.8
400	70.0	69.1	68.1	67.2	66.2	65.3	64.3	63.4	62.4	61.6	60.8	60.0	59.1
500	69.4	68.5	67.6	66.6	65.7	64.7	63.8	62.8	62.0	61.2	60.4	59.6	58.7
550	69.2	68.3	67.4	66.4	65.5	64.5	63.6	62.7	61.9	61.1	60.2	59.4	58.6
600	69.1	68.1	67.2	66.3	65.3	64.4	63.4	62.6	61.8	60.9	60.1	59.3	58.5
700	68.8	67.9	66.9	66.0	65.0	64.1	63.2	62.4	61.6	60.7	59.9	59.1	58.3
800	68.6	67.7	66.7	65.8	64.8	63.9	63.0	62.2	61.4	60.6	59.8	59.0	58.1
900	68.4	67.5	66.6	65.6	64.7	63.7	62.9	62.1	61.3	60.5	59.7	58.8	58.0
1000	68.3	67.4	66.4	65.5	64.6	63.6	62.8	62.0	61.2	60.4	59.6	58.7	57.9
1200	68.1	67.2	66.2	65.3	64.4	63.5	62.7	61.9	61.1	60.3	59.4	58.6	57.8
1250	68.1	67.1	66.2	65.3	64.3	63.4	62.6	61.8	61.0	60.2	59.4	58.6	57.7
1450	67.9	67.0	66.1	65.1	64.2	63.3	62.6	61.8	61.0	60.1	59.3	58.5	57.7
1500	67.9	67.0	66.1	65.1	64.2	63.3	62.5	61.7	60.9	60.1	59.3	58.5	57.6
2000	67.7	66.8	65.9	64.9	64.0	63.2	62.4	61.6	60.8	60.0	59.2	58.3	57.5
2500	67.6	66.7	65.7	64.8	63.9	63.1	62.3	61.5	60.7	59.9	59.1	58.2	57.4
3200	67.5	66.6	65.6	64.7	63.8	63.0	62.2	61.4	60.6	59.8	59.0	58.2	57.3
5000	67.4	66.4	65.5	64.6	63.7	62.9	62.1	61.3	60.5	59.7	58.9	58.1	57.2
10000	67.3	66.3	65.4	64.5	63.6	62.9	62.1	61.3	60.5	59.6	58.8	58.0	57.2
50000	67.2	66.2	65.3	64.4	63.6	62.8	62.0	61.2	60.4	59.6	58.8	57.9	57.1
Tangent	67.1	66.2	65.3	64.3	63.6	62.8	62.0	61.2	60.4	59.6	58.7	57.9	57.1

Basic Assumptions / Criterion:

1. Cross level variation: 0.125 inch.
2. All values are in inches measured from the track centerline.
3. Values worst case calculated values.
4. Maximum vehicle roll angle is 4°.
5. Vehicles are fitted with cameras, not mirrors.
6. Composite envelope derived from the following current production 70% low floor LRVs (KinkiSharyo Hudson Bergen, Bombardier Hiawatha, Siemens 93 ft S70).
7. Calculations include wheel and track tolerances including wheel wear, track wear, rail gauge tolerance, wheel gauge tolerance, nominal sideplay and lateral suspension motion.

Table 8-6: Vehicle Outswing Values – Non-ballasted Track

Radius (feet)	Superelevation (inches)												
	0.0	0.5	1.0	1.5	2.0	2.5	3.0	3.5	4.0	4.5	5.0	5.5	6.0
	Inswing	Inswing	Inswing	Inswing	Inswing	Inswing	Inswing	Inswing	Inswing	Inswing	Inswing	Inswing	Inswing
82	76.1	76.4	77.5	78.5	79.5	80.5	81.5	82.5	83.5	84.5	85.5	86.6	87.6
95	73.2	73.5	74.6	75.6	76.6	77.6	78.6	79.6	80.6	81.6	82.7	83.7	84.7
100	72.3	72.6	73.7	74.7	75.7	76.7	77.7	78.7	79.7	80.7	81.7	82.7	83.7
150	66.6	66.9	67.9	69.0	70.0	71.0	72.0	73.0	74.0	75.0	76.0	77.0	78.0
200	63.8	64.1	65.1	66.1	67.2	68.2	69.2	70.2	71.2	72.2	73.2	74.2	75.2
250	63.7	64.5	65.2	66.0	66.7	67.6	68.5	69.4	70.3	71.2	72.1	73.0	73.9
300	63.7	64.5	65.2	66.0	66.7	67.6	68.5	69.4	70.3	71.2	72.1	73.0	73.9
400	64.5	65.2	66.0	66.9	67.8	68.7	69.6	70.5	71.4	72.3	73.2	74.1	75.0
500	64.9	65.7	66.6	67.5	68.4	69.3	70.2	71.1	72.0	72.9	73.8	74.7	75.6
550	65.1	65.9	66.8	67.7	68.6	69.5	70.4	71.3	72.2	73.1	74.0	74.9	75.8
600	65.2	66.1	67.0	67.9	68.8	69.7	70.6	71.5	72.4	73.3	74.2	75.1	76.0
700	65.4	66.3	67.3	68.2	69.1	70.0	70.9	71.8	72.7	73.6	74.5	75.4	76.3
800	65.6	66.6	67.5	68.4	69.3	70.2	71.1	72.0	72.9	73.8	74.7	75.6	76.5
900	65.8	66.7	67.6	68.6	69.5	70.4	71.3	72.2	73.1	74.0	74.9	75.8	76.7
1000	65.9	66.9	67.8	68.7	69.6	70.5	71.4	72.3	73.2	74.1	75.0	75.9	76.8
1200	66.1	67.1	68.0	68.9	69.8	70.7	71.6	72.5	73.4	74.3	75.2	76.1	77.0
1250	66.2	67.1	68.0	68.9	69.8	70.8	71.7	72.6	73.5	74.4	75.3	76.1	77.0
1450	66.3	67.2	68.2	69.1	70.0	70.9	71.8	72.7	73.6	74.5	75.4	76.3	77.2
1500	66.3	67.3	68.2	69.1	70.0	70.9	71.8	72.7	73.6	74.5	75.4	76.3	77.2
2000	66.5	67.5	68.4	69.3	70.2	71.1	72.0	72.9	73.8	74.7	75.6	76.5	77.4
2500	66.7	67.6	68.5	69.4	70.3	71.2	72.1	73.0	73.9	74.8	75.7	76.6	77.5
3200	66.8	67.7	68.6	69.5	70.4	71.3	72.2	73.1	74.0	74.9	75.8	76.7	77.6
5000	66.9	67.8	68.7	69.6	70.6	71.5	72.4	73.3	74.2	75.1	76.0	76.9	77.7
10000	67.0	67.9	68.9	69.8	70.7	71.6	72.5	73.4	74.3	75.2	76.1	77.0	77.9
50000	67.1	68.0	68.9	69.9	70.8	71.7	72.6	73.5	74.4	75.3	76.2	77.1	78.0
Tangent	67.1	68.1	69.0	69.9	70.8	71.7	72.6	73.5	74.4	75.3	76.2	77.1	78.0

Basic Assumptions / Criterion:

1. Cross level variation: 0.125 inch.
2. All values are in inches measured from the track centerline.
3. Values worst case calculated values.
4. Maximum vehicle roll angle is 4°.
5. Vehicles are fitted with cameras, not mirrors.
6. Composite envelope derived from the following current production 70% low floor LRVs (KinkiSharyo Hudson Bergen, Bombardier Hiawatha, Siemens 93 ft S70).
7. Calculations include wheel and track tolerances including wheel wear, track wear, rail gauge tolerance, wheel gauge tolerance, nominal sideplay and lateral suspension motion.

Table 8-7: Vehicle Inswing Values – Non-ballasted Track

8.5 Vehicle Weight and Design Loading

The maximum assigned weight (AW) of a vehicle shall be no greater than those shown in Table 8-8, Vehicle Weights for Design Purposes, and are based on an average passenger weight of 154 lbs.

Equipment installation shall be arranged so that its weight is evenly distributed to provide the lowest possible center of gravity in order to limit the tendency of the vehicle to overturn, maximize adhesion, and minimize axle loads. Weight distribution on the center truck shall remain within 25 to 35% of the total vehicle weight at any assigned weight.

Table 8-8: Vehicle Weights for Design Purposes

Loading Condition		Maximum Weight
AW0 (Ready to Run)	Maximum empty operating weight	100,000 lbs.
AW1 (Seated load)	AW0 weight plus seated load passengers and one Operator	111,242 lbs.
AW2 (Design load)	AW1 load plus standees at 2.7 feet^2 of suitable standing space per standee	129,722 lbs.
AW3 (Crush load)	AW1 load plus standees at 1.8 feet^2 of suitable standing space per standee	138,962 lbs.
AW4 (Structural Design)	AW1 load plus standees at 1.35 feet^2 of suitable standing space per standee	148,202 lbs.

8.6 Vehicle Performance

The Propulsion and Braking Systems shall be rated to provide safe and satisfactory operation on the METRO LRT system under the specified loads and anticipated environmental conditions identified herein, up to the maximum specified speed, with acceleration, deceleration and jerk rates within acceptable passenger comfort limits.

The performance of the propulsion and braking systems shall be compatible with the performance of METRO's existing LRT vehicles.

8.6.1 Supply Voltage

All vehicle equipment shall be designed to operate satisfactorily over the power system supply range identified in Section 8.2.

8.6.2 Operation Under Reduced Supply Voltage

In order to optimize the power supply system performance, forced reduced performance shall be provided under low voltage conditions. If the line voltage falls below 625 Vdc, the propulsion current limit will be lowered progressively at a rate of 0.5 percent per volt. The control algorithm used shall provide dynamic stability of the current limiting process without oscillations or whipsaws.

8.6.3 Maximum Line Current

The maximum line draw per vehicle shall not exceed 1,350 amperes (propulsion plus auxiliaries).

8.6.4 Acceleration

A maximum acceleration rate of 3.0 mphps, ± 5 percent, with vehicle loadings of AW0 through AW2 and nominal line voltage, shall be available from 0 to 20 mph.

Acceleration rates may decrease linearly for AW2 through AW4 loadings. At line voltages below 750 Vdc, the speed to which the initial acceleration rate is held may decrease proportionally to catenary voltage.

The maximum variation between vehicles in acceleration from the nominal rate due to propulsion control shall not exceed 0.20 mphps.

The maximum period of time required to reach the following speeds from a standing start [AW2 loading] shall be:

- 0 to 20 mph 8 sec
- 0 to 25 mph 10 sec
- 0 to 50 mph 35 sec
- 0 to 55 mph 45 sec

8.6.5 Service Braking

The average deceleration rate for full service braking shall be 2.2 mphps for speeds between 55 mph and 45 mph, and 3.0 mphps ±5 percent from 45 mph to a complete stop.

Dynamic braking shall contribute to the braking effort as long as possible, with down to 6 mph being the minimum acceptable drop out point.

The not-to-exceed stopping distances [AW3 loading] with a jerk limit of 1.55 mphpsps, shall be as follows:

- From 55 mph to zero: 880 feet
- From 45 mph to zero: 591 feet

8.6.6 Emergency Braking

For up to AW3 vehicle loadings, the average emergency deceleration rate from 55 mph to 30 mph shall be at least 4.0 mphps. From 30 mph to a full stop, the average deceleration rate shall be at least 4.5 mphps and limited only by the capability of the electromagnetic track brake.

The not-to-exceed stopping distances shall be as follows:

- From 55 mph to zero: 536 feet
- From 40 mph to zero: 275 feet
- From 30 mph to zero: 147 feet

8.6.7 Parking Brake

A parking brake system capable of holding an AW4 loaded vehicle on a 7% grade for an indefinite period of time shall be provided.

8.6.8 Operating Speed

The maximum normal operating speed shall be 55 mph.

8.6.9 Duty Cycle

The propulsion and braking systems shall be capable of operating continuously, without exceeding the continuous rating of any vehicle equipment at AW2 loading, operating in a single vehicle consist, at 750 Vdc, on a duty cycle comprised of full power acceleration and braking to maintain the maximum allowable track speeds between stations. Each duty cycle shall assume between 5 and 20 seconds dwell time at each station stop and layovers of between 2 and 11 minutes at the ends of each line.

8.6.10 Annual Average Mileage

The vehicle shall be designed based upon an estimated annual mileage of 45,000 miles per vehicle.

8.6.11 On-Board Diagnostics

An annunciation device shall be provided on each vehicle to provide information regarding malfunctions of vehicle systems and equipment. Each malfunction shall be uniquely indicated on an on-board status panel readily accessible to operating and maintenance personnel. Each indicator shall continue to annunciate the specific malfunction until the indicator is reset.

8.7 Passenger Comfort

This section defines the requirements for passenger comfort on the vehicle including HVAC, noise, ride quality, lighting and interior design.

8.7.1 Heating Ventilation and Air Conditioning

8.7.1.1 General

Given the extreme temperatures of the Phoenix area, the HVAC system is a critical vehicle subsystem. The HVAC system design shall make every effort to reduce the requirement for air conditioning capacity through utilization of vehicle passive and active measures that will reduce solar and radiated heat load, while minimizing cool air loss. Capacity and initial functionality of the HVAC system shall be proven by full vehicle climate chamber qualification testing. Acceptable capacity qualification testing shall be in accordance with the air/enthalpy method as defined in ASHRAE Standard 37 or acceptable equivalent.

The vehicle heating, ventilation, and air conditioning (HVAC) system shall meet the following performance requirements:

A. Air Conditioning. Each vehicle shall have at least two equal and independent air-conditioning systems with interconnected ductwork having an aggregate cooling capacity equal to the maximum calculated cooling requirement for the vehicle.

B. Ventilation and Air Circulation. All of the ventilated air shall be introduced through the air-conditioning equipment and shall not include air introduced when the doors are open. There shall be no passenger-openable windows for ventilation provided.

C. Heating. The total heating system shall have the capacity equal to the maximum calculated heating requirement for the vehicle. No floor level or underseat heaters shall be provided.

D. Condensation and Humidity. The HVAC system shall minimize condensation on interior surfaces, including windows. Reheat is permitted if required to limit the interior humidity.

E. Controls/Temperature Uniformity. Interior temperature shall be fully automatically controlled in cooling, ventilation and heating modes without manual intervention

F. Air Flow, Diffusion and Discharge Temperature. The air distribution system shall provide sufficient diffusion at the outlet or diffuser so that air mixing will prevent direct impingement of air onto occupants.

G. Environmental Emission Standards: The air-conditioning system shall meet all international environmental emission standards, and shall utilize environmentally friendly R-407C refrigerant or METRO approved alternative.

8.7.1.2 Temperature Control

The HVAC system controls shall maintain the vehicle interior conditions so as to remain within the comfort zone of acceptable indoor operative temperature ranges as shown in Figure 8-6 below. However, given the relative lack of humidity in the Phoenix area during much of the year, air humidification measures will not be required.

The maximum allowable variations in temperature in the vehicle passenger areas shall be as follows:

- Less than 4° F variation at any height from 6 in to 48 in above the floor
- Average vehicle temperature shall be within 2° F of the comfort zone requirements within 2 minutes following a 30 second opening of all vehicle passenger doors on one side.

The maximum allowable variation in temperature in the vehicle operating cabs shall be as follows:

- Less than 4° F variation at any height from 6 in to 48 in above the floor

Figure 8-6: ASHRAE Summer and Winter Comfort Zones

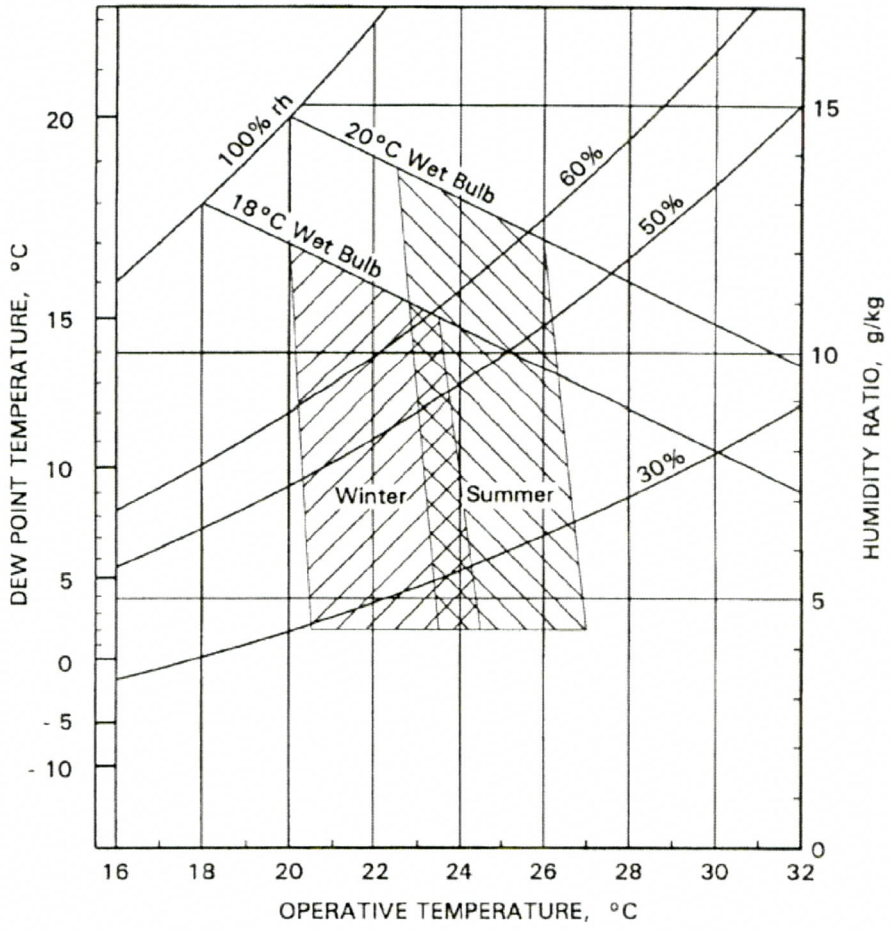

- Source: ASHRAE Fundamentals Handbook – 2001, Chapter 8, Fig. 5

8.7.1.3 Interior Fresh Air Intake

Intake of filtered fresh air shall be provided for each vehicle, the required fresh air volume being between 1200 ft^3/min and 1400 ft^3/min regardless of vehicle position in a train or the vehicle speed and shall be adequate to maintain the positive pressurization requirements of Section 8.7.1.5.

8.7.1.4 Interior Air Filtration

The HVAC system filter elements shall be capable of removing fine dust and allergens to an 85 percent efficiency level as per ASHRAE 52.2 – Method of Testing General Ventilation Air Cleaning Devices for Removal Efficiency by Particle Size.

8.7.1.5 Interior Positive Pressurization

The ventilation system shall maintain a vehicle internal positive static pressure at all vehicle speeds and a minimum static pressure of 0.10 in of water when all doors and windows are closed.

8.7.1.6 Interior Maximum Air Velocity

To increase system efficiency and minimize air noise, the maximum air velocity through the HVAC ductwork shall be 1200 ft/min.

8.7.1.7 Design Temperatures

For the purposes of the overall HVAC system design, the following design parameters shall be used:

- Phoenix Latitude : 33.4°, Elevation : 1106 ft
- Summer Design Ambient: 112°F DB, 76°F WB
- Summer vehicle interior: 76°F, 50% RH
- Air entering HVAC condenser or external roof mounted equipment: 122°F
- Winter Design Ambient: 34°F DB
- Winter vehicle Interior: 70°F

8.7.1.8 Cooling Loads

For the purposes of HVAC cooling system design, the following thermal load parameters shall be used in calculating HVAC system performance and sizing HVAC units:

- Occupants: Max. 72 seated, 106 standees, one operator

1) Seated passengers: 400 Btu/hr TH, 245 Btu/hr SH per passenger
2) Standees: 450 Btu/hr TH, 250 Btu/hr SH per passenger
3) Operator: 750 Btu/hr TH, 275 Btu/hr SH

- Fresh Air: as required by Section 2.4.2.3.
- Carbody Conduction: The Contractor shall provide 'U' factors and associated surface areas for the vehicle walls, doors, ceiling, floor, window glass and vehicle ends based on the worst case car skin temperature and the specified interior temperature for use in the HVAC calculations.
- Solar Gain: The attendant solar gain shall be calculated based on a Phoenix location on July 21st at 1600 hours with the maximum possible area of vehicle window, door, and windshield glass facing into the sun.
- External Radiated Heat Loads: Radiated heat loads generated by roof mounted equipment and underfloor mounted equipment, including the effect of the skirts, shall be provided. Radiated heat generated by the street / roadbed shall be included in the HVAC calculations with no deduction for any shading effects arising from the passing of the vehicle, i.e., the vehicle underfloor is fully exposed to this heat source. For this part of the calculation, a street surface temperature of 140° F shall be utilized.

- Door Opening Heat Loads: For an average duty cycle, the vehicle doors may be open up to 15% of the journey time, leaving approximately 83 ft^2 of the vehicle open to the elements at each station stop. Given the specified fresh air requirements, assume 8.5 300 ft^3/min of cool air is lost per door with each opening (20 sec / stop). Special event services will be the worst case, thus it shall be assumed that all doors on one side will be opened at each station stop. Cooling loss / heat gain arising from periodic door opening (convection and radiated) shall be included in the HVAC calculations. The vehicle duty cycle specified in Section 8.6.9 shall be used as the basis for modeling this phenomenon.
- Internal Heat Loads: All necessary supplemental information regarding internal heat generated inside the vehicle by lighting, control electronics, etc. shall be provided for input into the HVAC calculations.

8.7.2 Noise Levels

Noise levels shall not exceed the levels indicated below under normal operating conditions with all equipment functioning. Measurement of exterior noise levels shall be made on level ground and in an essentially free field environment, 50 ft from the centerline of track perpendicular to the vehicle, on newly ground welded rail, at a height of 5 ft, away from reflecting surfaces, and on adjacent ground other than ballast, ties, and track.

Measurement of interior noise levels shall be made at designated points 3 ft from the left and right side walls, 4 ft from the floor.

8.7.2.1 Interior Noise

With all auxiliary equipment operating simultaneously under normal operating conditions, the noise level inside the vehicle shall average no more than 70 dBA stationary (72 dBA with all auxiliary systems operating and all HVAC units in full cooling mode, 68 dBA with any one system operating) and 75 dBA at 40 mph.

8.7.2.2 Exterior Noise

Average noise levels emanating from the vehicle shall not exceed the following levels on non-corrugated, tangent track with all auxiliary equipment operating simultaneously:

- Vehicle stationary, empty: 68 dBA
- Vehicle moving, empty, on horizontal tangent track at 40 mph: 75 dBA
- In maximum dynamic braking or maximum friction braking from 40 mph with new wheels: 75 dBA

8.7.2.3 Wheel Squeal Prevention

GPS activated, automatic flange lubrication equipment, resilient wheels, special wheel profiles, and other noise mitigation measures shall be installed on the vehicle to ensure that wheel squeal in curves does not exceed 78 dBA.

Noticeable pure tones are not permitted.

8.7.3 Ride Quality

For any single station to station run (not including dwells), RMS accelerations between 1 and 80 Hz shall fall below the levels outlined in Evaluation of Human Exposure to Whole-Body Vibration, ISO 2631 for one (1) hour exposure to the Reduced Comfort Boundary.

8.7.4 Interior Lighting

Vehicle interiors shall be designed with lighting fixtures that are secure, rattle free, and vandal resistant. Fluorescent tubes, or other powered fixtures, shall be inaccessible to passengers. Diffusers shall be provided of a material that is shatterproof. Illumination levels, as follows, shall be consistent and shall be measured with all light diffusing panels in place.

- The average intensity of the illumination within the car at an elevation of 33 to 66 in above the floor shall be at least 30 Footcandles at rated voltage.
- The light intensity at the floor throughout the vehicle, in the passenger aisles, steps and articulation section, shall not be less than 20 Footcandles.
- The average light intensity at the car entrances and exits inside the vehicle within 20 in of the doors shall not be less than 20 Footcandles at the floor.
- Emergency exit lighting shall illuminate the path from each vehicle emergency exit. Such lighting shall be at least 5 Footcandles and shall be powered from the vehicle battery.

It shall be possible for only authorized personnel to turn off interior lights.

8.7.5 Interior Design

Light rail vehicles, their systems and sub-systems shall be designed in such a way as to be easy to use, simple, efficient, reliable and safe for operators, passengers, and maintenance personnel. Establishing a good man-machine interface through ergonomic design is well established and refined, especially in the military environment, where the standard MIL-STD-1472F – Department of Defense Design Criteria Standard - Human Engineering, establishes detailed and easily understandable criteria. These design criteria shall be the basis for the absolute minimum ergonomic requirements for the light rail vehicle design.

For ergonomic design purposes, the vehicle shall be able to accommodate as a minimum the range of passengers, operators, and maintenance personnel ranging from the US 5th percentile female to the 95th percentile male. Current US anthropometric details to be used are in Architectural Graphic Standards, 10th edition – Section 1: Human Dimensions. Where these details are insufficiently comprehensive, MIL-HDBK-759C – Human Engineering Design Guidelines, Section 5.6, Tables 16a though 16f, General Forces shall be used.

For specific assistance in cab area design, ISO 13407:1999 – Human-Centered Design Processes for Interactive Systems shall be used.

Corridors and aisles shall have a height of at least 80 inches. The main aisle width shall be at least 34 inches to permit access by a wheelchair from all passenger doors. All standing passengers shall have access to vertical stanchions or handholds. The window area shall be maximized to emphasize a feeling of openness.

The interior shall have no sharp corners or inaccessible areas at floor level and shall be easy to clean and maintain. Handholds, lights, air vents, armrests, and other interior fittings shall appear to be integral with the vehicle interior. There shall be no sharp, abrasive edges, corners, or surfaces, and no hazardous protuberances.

Interior panel material shall permit easy removal of paint, greasy fingerprints, and ink from felt tip pens, etc. Materials shall be strong enough to resist everyday use and shall be resistant to scratches and markings. Use of visible fasteners shall be minimal and any interior mullion trim, moldings, and trim strips shall match the adjacent panels/walls.

Seats shall be similar to seats in existing vehicles and shall be easily maintained and resistant to vandalism.

The vehicle floor shall be covered with slip-resistant rubber flooring material similar to that used in existing vehicles. The floor covering material shall comply with all applicable ADA requirements for visibility and friction coefficients. Colors for the floor covering and step nosing shall complement the vehicle's overall interior design.

8.8 Reliability

On the assumption that the Vehicle Supplier's specified routine maintenance is performed on the various vehicle sub-systems and components, the following reliability requirements shall be met:

Table 8-9: Reliability Requirements

System	Mean Distance Between Component Failure
Propulsion System	90,000 miles
Friction Braking System	90,000 miles
Passenger Doors	90,000 miles
HVAC System	180,000 miles
Couplers and Bumpers	180,000 miles
Trucks and Suspension	180,000 miles
TWC, AVL, and Events Recorder	180,000 miles
Video Monitoring, Communications, PA and Pass. Info	180,000 miles
Auxiliary Power Systems	225,000 miles
Lighting (except bulbs)	450,000 miles

8.9 Maintainability

The Mean Time to Repair (MTTR) a vehicle fault shall not average more than 1.5 hours per fault, including diagnostic time.

The following Table 8-10, Weighted Average of MTTR Values, shall indicate the weighted average of the MTTR values for the specified subsystem elements:

Table 8-10: Weighted Average of MTTR Values

System	Mean Time to Repair (hours)
Propulsion System	1.5
Friction Braking System	1.8
Passenger Doors	0.75
HVAC System	2.0
Video Monitoring, Communications, PA and Pass. Info.	1.0
Couplers and Bumpers	2.5
Trucks and Suspension	1.5
TWC, AVL and Events Recorder	1.0
Auxiliary Power System	1.5
Lighting	0.5

Given the high level of street running in the METRO LRT system, accidents involving collisions with motor vehicles are expected to be a regular occurrence. To minimize the resulting vehicle out of service downtime, the cab end of the vehicle shall be fitted with prefinished, easily replaceable, anticlimber bumpers and body panels. In the majority of collisions (minor to medium in severity), these features shall allow the operator to return the vehicle to revenue service in less than 24 hours.

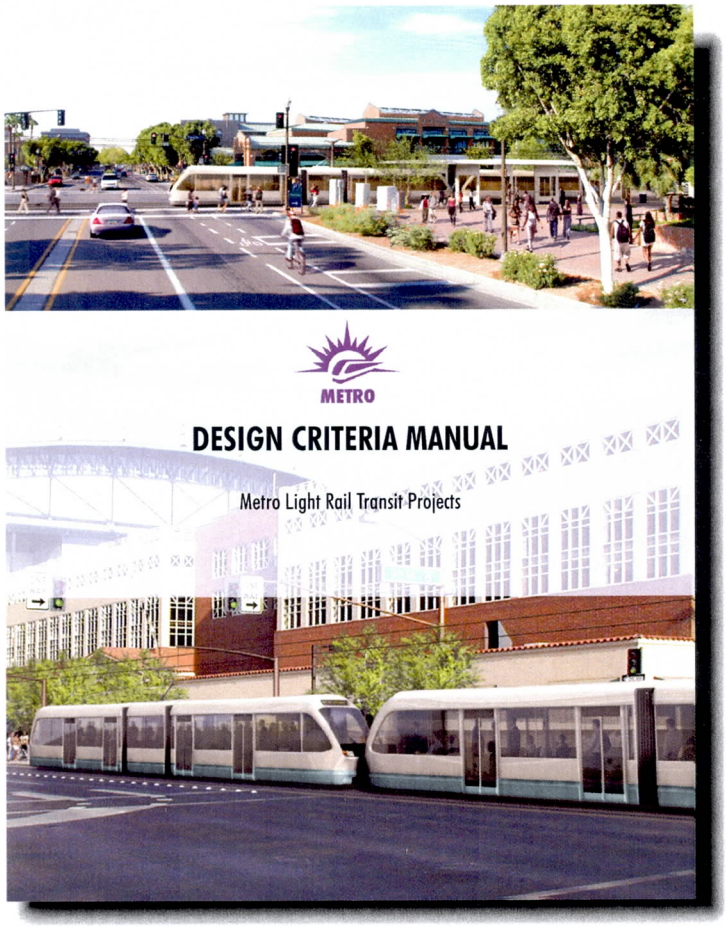

Chapter 9.0

Maintenance & Storage Facility (MSF)

9.0 MAINTENANCE & STORAGE FACILITY (MSF)

9.1 GENERAL

The Maintenance and Storage Facility (MSF) shall be planned as the location for LRV corrective and preventative equipment maintenance, LRV service and cleaning, LRV storage and maintenance of way operations. The LRT system Operations Control Center (OCC) will be located at the METRO headquarters building at 302 North First Avenue, Phoenix, Arizona.

This Chapter establishes the guidelines and general criteria for the design of the light rail transit (LRT) system's Maintenance Shop and Storage Yard Facilities as follows:

- Site Size Selection, Configuration and Location
- Maintenance of Equipment Shop (MOE)
  - Component Repair Shops
  - Overhaul Tracks
  - Corrective and Preventive Maintenance Tracks
  - Wheel Truing
  - Paint and Body Shop (future)
  - Central Storage
  - Maintenance of Equipment General Office Area
  - Operations General Office Area
  - Welfare Facilities
  - Mechanical, Electrical, Communication Rooms
  - Shop Electrical Substation
  - Parking for Authority Vehicles
- LRV Service and Cleaning Area
- LRV Washer
- LRT Storage Tracks
  - Shade Structure desirable for 10 to 12 LRVs
  - Lead tracks from main line
  - Yard Loop/Shop By-pass track
  - Set-off track
- Maintenance of Way Shop (MOW)
  - Maintenance of Way General Office Area
  - Support Shops

  - Inside and exterior secured storage areas
  - Maintenance of way equipment storage tracks
  - Parking for Authority Vehicles
- Entry Station
  - Site Security Systems
- Employee, Visitor and Authority Vehicle Parking
- Traction Power Substations
- Signal and Communication Houses
- Internal Road Circulation System
- Utilities
- Landscaping
  - Site Security Fencing
- Miscellaneous Structures
  - Retaining Walls
  - Bridges
  - Drainage structures

9.1.1 Site Selection

Site selection criteria shall consider the following:

- Zoning and Land Use Compatibility
- Compatibility with the of the applicable municipality General Plan
- Environmental Site Characteristics
- Archaeological Site Characteristics
- Noise Impacts of the Proposed LRT Use
- Right-of-way Boundaries, Ownership and Cost
- Site layout, Circulation and existing Buildings and Structures
- Capacity and future Expansion
- LRV access and its impacts
- Employee Access and Impacts
- Cost – Property, Relocations/Damages, Number of Relocations Required; and
- Total Costs

The MSF site shall be ideally located near the endpoint of the expanded LRT system and shall be located as close to the main line LRT tracks a possible. The site shall be rectangular and sized to accommodate 50% of the system build-out fleet size of LRVs to be assigned to the route. Existing public owned property shall be utilized if possible. Connections to existing railroad tracks is desirable but not required.

9.1.2 Maintenance of Equipment Shop (MOE)

The MOE shop shall be designed for staged construction to serve LRVs assigned to the facility with maintenance crews operating on a three-shift basis. The shop shall be designed to provide the flexibility to service LRVs in a variety of preventive, corrective and overhaul maintenance programs based on component change-out with limited component overhaul capabilities. Major component overhauls shall be accomplished by outsourcing.

The LRV design vehicle shall be an articulated, double-ended operating cab, low floor vehicle, approximately 93.0 foot long (90.3 Structural Design) each as further identified in Chapter 8. The LRVs are planned to be operated in one to three car consists.

It is intended that the operation of the LRT system shall be by a contract operator with oversight provided by the Authority. The MOE shall provide integrated offices for the Authority oversight staff and the contract operator.

The MOE shall include the following minimum general work areas.

- Component Repair Shops – Includes: truck repair shop, wheel shop, mechanical component repair shop, machine/sheet metal shop, pneudraulics shop, battery shop, parts cleaning shop, welding shop and electronics shop.
- Overhaul Tracks – A non-electrified overhaul track(s) with in-floor hoist system to provide capability for unscheduled repairs and overhaul of LRV trucks. This track and related work areas shall be provided with overhead crane system and jib cranes as needed.
- Corrective and Preventive Maintenance Tracks – Electrified corrective and preventive maintenance tracks with pits and mezzanine platforms to provide the capability to maintain the LRV underside, inside and roof mounted equipment. Appropriate horizontal and vertical movement of materials and equipment.
- Wheel Truing – Provide a wheel-truing machine with a full LRV car length pit in advance of the machine on an electrified track.
- Paint and Body Shop – Provide for a future LRV body repair shop and paint booth on a non-electrified track. The body repair shop and paint booth shall each be in a separate enclosed area.
- Facilities Maintenance Shop – Provide a shop to support all facility maintenance on the MSF site.
- Central Storage – The MOE shop shall be the central receiving and storage point for the MSF. Sufficient area shall be provided to accommodate the central receiving and storage functions, with scheduled weekly replenishing of often used parts.

- Maintenance of Equipment General Office Area - An integrated general office and welfare area for the Authority oversight staff and contract operator MOE staff shall be provided. The office areas shall include conference rooms, office support equipment (fax, copiers, paper storage, printers, etc) office storage, etc.
  - Operations General Office Area - An integrated general office and welfare area for the Authority oversight staff and contract operator MOE staff shall be provided. The office areas shall include conference rooms, office support equipment (fax, copiers, paper storage, printers, etc) office storage, etc.
  - Welfare Facilities – Welfare facilities for all staff includes locker areas, restrooms, lunchrooms, etc.
  - Mechanical, Electrical, Communication Rooms – Provide adequate mechanical, electrical, communication and other support equipment rooms.
  - Shop Traction Power Substation – Provide a separate shop substation to serve the shop OCS system. Each electrified track within the shop is to be provided with OCS disconnect switches and related safety devices
  - Parking for Authority Vehicles – Provide parking for all MOE and MOW sites related highway vehicles and on-site motorized carts.
  - Miscellaneous Items – Provide for scrap and waste storage, compressed gas storage, oil water separator(s), waste oil, grease storage tanks and other non-specific support functions.

9.1.3 Service and Cleaning Area (S&C)

The S&C area will provide daily/periodic interior LRV car cleaning capabilities, inspection of the underside and pantograph and will include provision for the following:

- Sanding – A pneumatic sanding system with fill stations located adjacent to each LRV sand container. A sand tower with pneumatic loading devices.
- Inspection station – Provide a one-half LRV pit with a roof level inspection station on one track. Consider utilizing a CCTV system in lieu of a roof level platform.
- Cleaning platform – Provide a LRV car floor level center platform equipped with slop sinks, cleaning supply storage, refuse containers, sanding fill stations, car cleaner supervisor office, and related equipment. The platform will accommodate four LRVs per track for system build-out and be capable of staged construction, be accessible by motorized carts to remove refuse and deliver supplies.
- Inspection office - An MOE car inspection supervisor office near the inspection pit/roof platform.
- Welfare facilities - Rest rooms located adjacent to the S&C platform to reduce the need for employees to utilize the facilities in the MOE shop.
- Oil Water Separator (OWS) – Connect inspection pit to an OWS system.
- Miscellaneous – Provide for refuse containers and storage containers as needed.

- Parking – Provide for parking of MOE motorized carts and highway vehicles as needed to support the S&C area.

9.1.4 LRV Washer

Provide an enclosed, one direction, and recycling LRV train washer in line with the S&C tracks. The LRV washer shall be designed for minimum water usage and passage of a LRV consist without engaging the washing mechanism. Access for delivery trucks and adequate storage for day-to-day materials and chemicals shall be included within the washer enclosure.

9.1.5 LRV Storage and Yard Tracks

Provide Yard track system that will support initial operations with provisions for 50% of the build-out of the LRT fleet projections for the specific route. The trackage and special trackwork will be a combination of manual and remote controlled switches. Some remote controlled switches will be controlled from the Operation Control Center while others will be controlled from the Yardmasters office located in the MOE shop, operations offices. In general the track layout will include the following:

- MSF Access - Provide a two-track yard lead with crossovers, as needed for access to/from the Main Line LRT system to the MOE shop.
- MOE shop set-off track – A track near the MOE shop to store one LRV unit.
- MOW Shop leads – Tracks leading directly into the MOE shop. MOE shop lead tracks will be protected by derails and blue flag system.
- S&C Area – Two tracks leading to the S&C service platform and LRV washer. The tracks will provide for queuing of LRVs into the S&C tracks.
- LRV Washer – A single track in line with the S&C tracks but prior to the yard storage tracks and Yard Loop track. The track shall be of sufficient length that a three vehicle train can enter tangent to the building.
- LRV Storage Yard and related yard tracks – Tracks for overnight storage of LRVs. Alternating tracks will have cart paths for motorized carts and small highway vehicles such as a pick-up truck.
- LRV Shade Structure – A shade structure to accommodate 10 to 12 LRVs will be provided within the LRV storage yard.
- Yard loop/MOE shop bypass track – A yard loop track shall provide the capability for LRVs to be operated around the yard without impacting MOE shop operations or access from the yard leads to the S&C area and LRV Washer. The yard loop/MOE shop bypass track shall be capable of accommodating LRV testing and commissioning.
- Emergency Vehicle Access Road – Provide access for emergency vehicles to cross the middle of the storage yard.
- Lead tracks to the Maintenance Facility Shop Building shall be of a length that vehicles entering the perimeter apron areas at the doors of the building shall be tangent.
- The minimum tightest curve track allowed will be a 100 foot radius.

9.1.6 Maintenance of Way Shop (MOW)

The MOW shop shall be designed to provide the flexibility to service track, systems and structural maintenance of the LRT system with the exception of station cleaning and landscaping which will be contracted out. The MOW facilities will be capable of supporting a variety of preventive, corrective and maintenance programs based on component change-out with limited component overhaul capabilities. Major rehabilitation of the line is planned to be accomplished by outside contracts. The MOW facilities shall include the following:

- Maintenance of Way General Office Areas - An integrated office for the Authority oversight staff and contract operator MOW staff shall be provided.
- Track Shop – A shop to support the maintenance of track and special trackwork and store non-controlled day-to-day materials.
- Traction Power Shop – A shop to support the maintenance of traction power substations and the overhead catenary system and store non-controlled day-to-day materials.
- Signals Communications Shop – A shop to support the maintenance of signals and communication systems and store non controlled day-to-day materials.
- Carpenter Shop – A shop to support the maintenance of fixed signage, stations furniture, other facilities and store non-controlled day-to-day materials.
- Machine Shop – A shop to support machine work as needed and store non-controlled day-to-day materials.
- Welding Shop – A shop to support all functions that need welding or metalwork and store non-controlled day-to-day materials.
- MOW Controlled Storage – Provide inside secured storage for materials under the control of the MOW department.
- Exterior Secured Storage – Provide outside open storage for materials under the control of the MOW department but secured by fencing or within a general MOW compound.
- MOW Equipment Storage Tracks – Provides storage for rail mounted maintenance equipment. One track must be fitted to accommodate the unloading of LRVs from a semi-trailer.
- Parking for Authority/Contract Operator Vehicles – Secured parking for all MOW Authority vehicles within a compound.

9.1.7 Entry Station

An Entry Station shall be provided to maintain a twenty-four hour security point for the MSF site. Additionally, a security position shall be provided at the MOE building to provide a security position during a single shift. The entire MSF site shall be designed as a secured compound with limited access.

- Site Security Systems – The site security systems shall consider, but not be limited to the following; perimeter fence, closed circuit television cameras, employee identification/magnetic card access, remote controlled gates across the yard lead and an intrusion identification system.

9.1.8 Employee, Visitor and Authority Parking

Adequate parking shall be provided for all employees during the greatest shift change, visitors, and authority vehicle parking. Employee and visitor parking shall be provided near the MOE and MOW shop areas. Parking for Agency vehicles shall be provided in areas under the control of the MOE or MOW.

Provide security cameras and emergency phones in employee and visitor parking lots as necessary to provide coverage of the movement of staff within these areas.

9.1.9 Traction Power Substations

Provide an appropriate sized secure area for the yard traction power substation to support 50% of the LRV fleet assigned to this route and an additional area for a future substation to support the required growth. Provide a separate appropriate sized substation to serve the MOW shop building. The substation may be within the MOE shop.

9.1.10 Signal and Communication Houses

Provide an appropriate sized secured area for the signals and communication system houses needed to support the remote controlled Yard Lead switches – See Chapters 11 and 12.

9.1.11 Internal Road Circulation System

Provide an internal circulation road system that includes the following:

- Site Entrance Road – A paved two lane main roadway that provides access into the site and to the main parking areas near the MOE and MOW shops, the MOE Central Stores Receiving location, the MOW controlled storage areas. The entrance road will accommodate semi trailer deliveries including LRV deliveries and emergency vehicles.
- Paved Service Road – A secured paved roadway to provide access to ancillary areas such as Storage Tracks, S&C area, the LRV washer, traction power substation, signal and communication houses, MOW compound etc. The secured paved roadway shall restrict access to areas that should normally be utilized by contract operator staff and special deliveries of supplies. Road may be sized and signed for one-way traffic. Only authority motorized carts, highway vehicles and non-authority delivery trucks and emergency vehicles would have access to this roadway.
- Unpaved Service Road – A secured unpaved roadway to provide access to ancillary areas such as Storage Tracks, S&C area, the LRV washer, traction power substation, signal and communication houses, MOW compound etc. The secured unpaved roadway shall restrict access to areas that should normally be utilized by contract operator staff and small emergency vehicles.

9.1.12 Utilities

Provide all utilities needed for the MSF site.

9.1.13 Landscaping

Provide landscaping in accord with the applicable codes, and Urban Design guidelines.

9.1.14 Miscellaneous Structures

Provide design solutions for the miscellaneous structures that may be needed for the MSF site. The miscellaneous structures will include but not be limited to the following:

- Retaining Walls
- Bridges
- Drainage structures
- Catenary pole foundations
- Light Poles
- LRV Shade Structures

9.1.15 Historical Trolley (Future)

Provide space for a future Historical Trolley Storage Tracks and Maintenance Barn. Provision shall be made for two tracks and a structure to store two trolleys approximately 40 feet long.

9.1.16 Special Site Requirements

Meet the special and unique site requirements as needed for the selected site.

9.1.17 Items not included in MSF

The following items are not included at the MSF site:

- Operations Control Center – Will be provided at METRO headquarters 302 N. 1st Avenue
- Diesel Fuel/Propane/Gasoline Storage – Fueling of highway vehicles will be accomplished at local gas stations. Small quantities of diesel fuel/gasoline/propane will be stored in HAZMAT containers near the MOE/MOW shop to support small equipment.
- Station Cleaner/Landscape Support – contractors from their own facilities will provide Station cleaning and landscape support.
- LRT Transit Police – Transit police headquarters and support areas will be provided from a location to be determined.

9.1.18 Codes, Ordinances and Guidelines

A list of codes, ordinances, guidelines and standards applicable for the MSF facilities are listed below and need to be amended per local jurisdiction amendments and to incorporate the latest editions of the codes at time of construction of MSF.

- 2003 International Fire Code (IFC)
- 2003 International Building Code
- 2003 International Energy Conservation Code as amended in the 2004 ICC Supplement
- 2003 International Mechanical Code
- 2003 International Code Council Performance Code
- Arizona State Plumbing Code
- 2005 National Electrical Code/NFPA-70
- 2003 ASME A18.1 Safety Code for Platform Lifts and Stairway Chairlifts
- Governing Municipality - Administrative Provisions
- Federal OSHA requirements

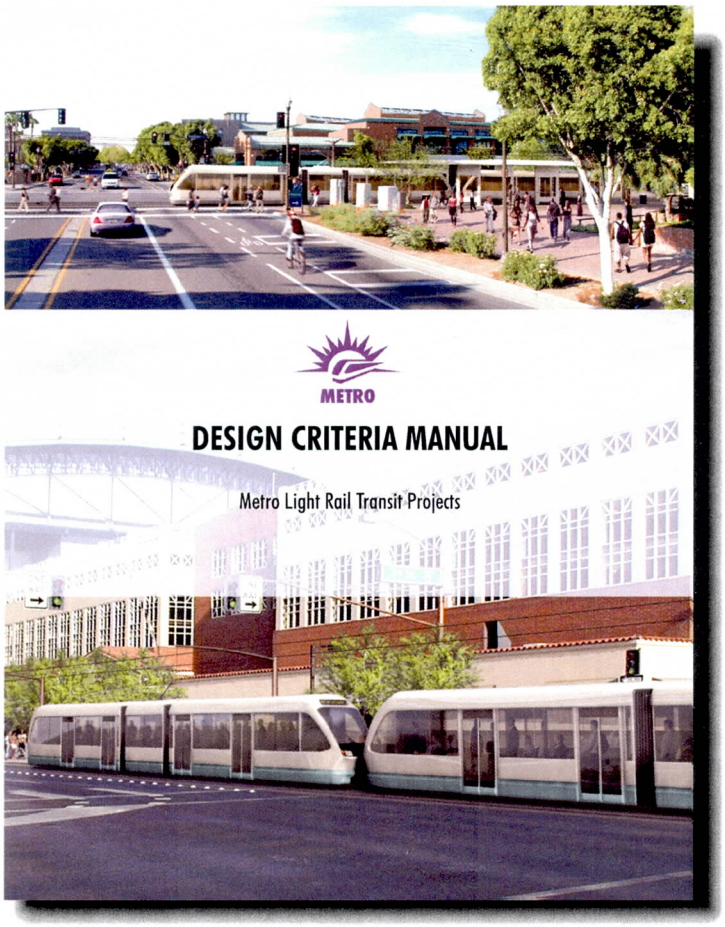

Chapter 10.0

Traction Power Supply and Distribution System

10.0 TRACTION POWER SUPPLY AND DISTRIBUTION SYSTEM

10.1 General

The purpose of this chapter is to establish the standards and design policies for the traction power supply and distribution system for all LRT operations on the METRO LRT Project.

The light rail vehicles will be propelled by electric traction motors driving steel wheels through the appropriate gearing. Electric traction power shall be supplied to the vehicle from wayside substations through an overhead contact system (OCS) distributing power through a contact wire installed over each running track. A pantograph collector on each car shall maintain contact with the wire. Both running rails of each track shall be used for the traction power negative return, except at crossovers or other locations as determined.

Power shall be supplied from the substations through a positive cabling system to the traction power distribution system, and returned to the substations through a negative cabling system from the running rails and/or impedance bonds.

The traction electrification system shall supply sufficient power to transit vehicles to provide safe, efficient, and continuous operations of the transit system. Design of the traction electrification system shall be coordinated with the electric utility companies who will provide primary power for the system. Electric power shall be supplied to the METRO LRT Project from two electric power utility companies, Arizona Public Service (APS) and Salt River Project (SRP). Partial design requirements for both utilities may be found at the following websites: www.aps.com and www.srpnet.com. Extensions into certain areas in the City of Mesa will obtain primary power from the City of Mesa Electric Utility. See the website at http://www.cityofmesa.org/utilities/electric/default.asp for further information.

The designer shall provide detailed feeder requirements including peak and RMS loads not later than 180 days prior to final design.

10.2 Requirements

The elements and requirements described in the following sections shall be included in the traction power supply and distribution system design:

Traction Power Substations

The traction power substation consists of all equipment between the interface point with the electric power utility and the interface point with the dc feeder system.

Utility Power Supply

The electric utility companies shall provide to each traction power substation 3-phase, 60 Hz power circuits as primary service.

DC Feeder System

The dc feeder system includes the positive dc feeders from the traction power substation to the overhead contact system, the negative dc feeders from the substation to the rails, and any parallel underground feeders required to locally reinforce the overhead contact system electrical capacity. The system shall also include raceways, pull boxes, manholes, and associated appurtenances for the routing of the feeder cables.

Overhead Contact System

The Overhead Contact System (OCS) consists of the Overhead Conductor Subsystem and the Physical Structure and Support Subsystem. Feeder and bypass disconnect switches shall be part of the Overhead Conductor Subsystem.

Codes and Standards

All materials, apparatus and equipment, installation methods, and testing shall conform to or exceed the requirements of the applicable portions of the latest edition of IEC, ANSI, NEMA, NEC, NFPA, NESC, IEEE, UL, UBC, ICEA, EIA, ASTM, and AREMA. Other local and state codes may also apply. The system shall be designed in compliance with industry standards, and the most stringent of these codes. Where there is conflict between theses codes and standards and the requirements of this Chapter 10, the more stringent shall apply.

Systems Integration

The traction electrification system design shall be coordinated with the Operations Plan, the LRT system civil work, and other systems disciplines (i.e. vehicles, signaling, communications, etc.).

Ambient Conditions

The Phoenix Metropolitan area is located in the Sonoran Desert. The design shall consider the special conditions associated with this desert climate. Refer to Chapter 1, General, for the applicable climatological conditions.

10.3 System Voltages

The following shall constitute the basis for traction electrification system design and rating:

Nominal DC Bus Voltage	850 VDC
Nominal OCS Voltage	750 VDC
Maximum OCS Voltage During Regeneration	900 VDC
Minimum Vehicle Operating Voltage	525 VDC
Maximum Rail to Ground Potential	50 VDC (70 VDC under contingency operation)

The OCS voltage is allowed to rise to 900 VDC during vehicle regeneration. During normal system operations, the minimum allowable line voltage to the vehicle is not to be less than approximately 625 VDC. Voltage at the vehicle pantograph must typically be at least 625 VDC to ensure full vehicle performance. Normal revenue operations shall be possible with one substation out-of-service, providing adjacent substations are operating normally.

10.4 Basis for Substation Location, Spacing, and Rating

The traction power substation (TPSS) locations shall be optimized with respect to system safety, system performance, system efficiency, right-of-way availability, substation site availability, stray current control, life cycle cost, and interconnection to the utility network.

A typical system configuration design provides mainline substations at approximately 1.0 to 1.5 mile intervals rated in the range of 2.0 to 2.5 megawatts depending on the configuration necessary to support service levels under all contingencies. Substation spacing at the ends of lines shall be reduced to nominally one half the normal spacing to accommodate stub-end feeding of the OCS, and to cater for the loss of an end-of-line substation. A dedicated substation shall be required to service yard track loads at the Maintenance and Storage Facility. A dedicated substation within the Maintenance of Equipment (MOE) building shall be required to service the shop loads.

The Mainline and Yard substations shall be rated uniformly to simplify maintenance issues and the management of spare parts.

The substation locations and equipment ratings shall permit operation under all anticipated conditions without exceeding specified performance ratings of the traction power supply and OCS system elements. Exceeding specified ratings shall pertain to any and all detrimental effects that result in diminished performance, shortened life, or physical damage of the traction electrification system elements. The traction electrification system equipment and conductor ratings shall be based on computer simulations of the LRT operations. Train performance data will be provided by METRO for these simulations. Under normal and contingency operations, the system voltage shall be maintained within acceptable levels for LRV operation, and the equipment and conductors shall operate within thermal limits prescribed by industry standards and manufacturer recommendations.

10.4.1 Normal Operation

The spacing and rating of the mainline TPSS shall be designed so that adequate power is supplied to the system, with all substations operating, to maintain rated LRT operating performance during peak-hour LRT operating conditions at minimum 4-minute headways, and 2-minute headways in the CBD and special event areas. This shall include simultaneous starting of two, three-car trains at AW2 loading at any passenger station or midway between substations.

The Yard and MOE substations shall be rated to provide adequate power to maintain normal operations of the light rail vehicles within the Yard and MOE facilities as defined under the operations plan.

10.4.2 Contingency Operation

Contingency operation of the mainline traction electrification system occurs when any one traction power substation is out-of-service on the mainline. The spacing and rating of the mainline TPSS shall be designed so that adequate power is supplied to the system to maintain operation of the LRT during peak-hour LRT operating conditions. This shall include simultaneous starting of two, three-car trains at AW2 loading at any passenger station or midway between substations in the outage zone. The system shall provide a minimum of 525 VDC on the mainline during contingency operations.

In order to ensure LRT operation during contingency scenarios, the traction electrification system and light rail vehicle designs shall be coordinated. Forced Reduced Performance (FRP) of the LRV shall be defined to ensure adequate operations under substation outage conditions. The LRV activation voltage shall be 625 VDC, and the reduction of performance shall be in the form of a sliding limit on the maximum propulsion current. If the line voltage falls below 625 VDC, the motor current limit shall be lowered progressively at a rate of 0.5 %/volt. Consequently, at the 525 VDC level the propulsion current shall be limited to 50 % of its normal maximum value.

Under contingency operations, the dc feeder circuits and positive dc bus of the out-of-service substation shall remain in service to feed across the section break. In the event that the positive dc feeders or bus are out-of-service, bypass-disconnect switches, if installed, shall be closed to bridge the two sections.

10.4.3 Special Events Operation

Under Normal and Contingency Operations, the TPSS shall be located and rated to also satisfy the ridership and operational requirements associated with Special Events. These include, but are not limited to, events at Chase Field, US Airways Center, Tempe Town Lake, Sun Devils Stadium, and Steele Indian School Park.

10.5 Traction Power Substations

10.5.1 General

The traction power substation consists of all equipment between the interface point with the electric power utility and the interface point with the dc feeder system. Each substation installation shall include utility metering equipment, ac switchgear, a thyristor controlled transformer/rectifier unit, dc switchgear, positive and negative busbars, a negative drainage panel, substation housing and foundation, grounding system, negative return system, protection system, auxiliary power supply system, a heating and ventilation system, batteries and charger, security system, surge arresters, and alarms and control. All substation components shall comply with applicable NEMA standards. All substation equipment shall be listed by UL, CSA, or IAEC; UL listing may be accomplished by a UL Field Evaluation. In addition, the power conversion equipment and load elements shall be designed such that the voltage distortion levels conform to the requirements and guidelines of IEEE Standard 519 and the serving utility.

Substations shall be designed to minimize impact on the areas in which they are located and to be in compliance with the Urban Design Guidelines.

10.5.2 Substation Traction Power Equipment

Transformer/Rectifier Unit

All Mainline & Yard substations shall have one transformer/rectifier unit. The thyristor rectifier units shall be solid-state and connected in accordance with ANSI Standard C34.2. Mainline and Yard units shall deliver a 12-pulse, double-way output (ANSI C34.2, Circuit 31). Rectifier transformers shall be cast coil type and provided with multiple taps to allow compensation for utility supply voltage variations.

The MSF buildings and Yard substation are supplied with two primary AC feeds from two different utility substations. The feeders are connected via an automatic transfer switch (ATS) to provide primary power in the event of the loss of either of the primary feeders.

The MOE shop power unit shall deliver a six-pulse, double-way output (ANSI C34.2, Circuit 23). The MOE substation is powered from the primary MOE building electrical switchboard at 480 VAC.

The basis for transformer/rectifier rating shall be the extra heavy duty cycle defined as follows: after reaching a steady state temperature, the rectifier transformer shall run at 150% of its rated load for 2 hours. During this 2-hour period, five equally spaced loads of 300% shall be imposed on the unit for a 1-minute duration each. At the end of the 2-hour cycle, a 450% load shall be imposed for 15 seconds. At the end of this duty cycle, there shall be no damage to the rectifier/transformer or any of its components.

Rectifier transformers shall be self-ventilated dry-type Class AA, suitable for indoor service. Silicon diode rectifiers shall be free-standing indoor-type metal-enclosed, and natural convection air-cooled. The transformer/rectifier units shall be rated extra-heavy traction rating class, in accordance with the above-defined extra heavy-duty cycle.

All substation equipment including the electronics shall be capable of operating at 100% capacity in an ambient temperature of 100° F.

AC Switchgear

The ac switchgear shall be metal-clad drawout–type. The breakers shall be 500 MVA class minimum, suitable for the available utility voltage and short circuit current.

DC Feeder Circuit Breakers

DC feeder circuit breakers shall be specifically designed for dc transit service and installed to provide isolation of OCS sections. The breakers shall be indoor, metal-enclosed, drawout, 800 VDC rated (1000 VDC maximum), single-pole, high-speed units capable of interrupting the maximum short-circuit current available.

Circuit breakers shall be equipped with digital protective relaying which provides direct acting instantaneous overcurrent "rate-of-rise," and automatic reclosure relaying and provisions for transfer trip between substations. The protection shall open all breakers feeding a faulted section. At the substation, circuit breakers shall be used for all feeders. After two trips associated with a fault, a manual reset shall be required. Circuit breakers shall normally be operated by local controls under manual operation within each substation. Each circuit breaker shall be equipped with provisions for remote operation with SCADA.

10.5.3 Metering

Each utility feeder line shall be provided with revenue metering in accordance with the requirements of the electric utility.

Indicating meters shall be provided to display the following:

- ac line current
- ac bus voltage
- dc positive bus voltage
- dc feeder line current
- dc feeder voltage
- dc negative bus voltage (mainline substations and yard negative bus)
- dc leakage current (MOE Shop substation negative bus)

10.5.4 Protection

The substation design shall incorporate protective devices to mitigate damage to equipment and avoid hazards to personnel in the event of overloads, faults, and other abnormal conditions. As a minimum, the following protection shall be provided:

Transformer/Rectifier Unit Protection

- Overcurrent Relays (Phase and Neutral)
- Phase Sequence and Undervoltage Relay
- Surge Arresters on the Incoming Line
- Rectifier Surge Protection
- Transformer Winding Overtemperature Relay
- Rectifier Thyristor or Diode Over-Temperature Protection
- DC Reverse Current Blocking Device. The reverse current protection shall protect the rectifier from a fault current fed from the dc line.

DC Feeder Breaker Protection

- Instantaneous Trip - The dc feeder breakers shall clear overloads and faults, yet must be capable of sustaining short-time instantaneous loads, due to train starting, without nuisance tripping.
- Low-Level Fault Protection - Rate-of-rise relays shall be provided to detect low-level faults occurring remote from a substation. The devices shall discriminate between low-level remote faults and the inrush current of starting trains.
- Long-Time Overcurrent Protection - The rate-of-rise relay shall include a long-time overcurrent device set to protect overhead wires from overheating.
- Load Measuring - The load-measuring scheme shall prevent inadvertent closure onto a faulted line.

- Transfer Trip – Transfer trip shall open all breakers feeding a faulted section. This is not applicable for the Yard and Shop substations.

DC Fault Protection

DC Equipment Grounding and Ground Protection - The dc negative return shall be isolated from ground. Personnel and equipment protection shall be provided by a high-resistance ground protection scheme.

10.5.5 Substation Enclosure

All traction power substations shall be designed to meet basic safety and fire protection requirements. Traction power substations should be considered as unoccupied (U-1) when referencing the *Uniform Building Code* for occupancy related requirements or in compliance with the authority having jurisdiction.

The basic requirements to be incorporated into the building design shall include the following:

- Emergency access to and egress from the substations shall be in accordance with local fire codes, the NEC and the Uniform & International Building Codes.
- Emergency lighting and exit signs shall be in accordance with local codes, the Uniform & International Building Codes and Fixed Guideway Transit Systems.
- Substations shall be provided with an automatic fire detection system and portable fire extinguishers. They shall comply with Chapter 38 of the Uniform Building Code and local codes.
- Substation doors shall be monitored by a security system. Entry by unauthorized persons shall be prevented by means of locks and special keys.

10.5.6 Substation Foundation

The design of the substation foundation shall conform to established civil and structural engineering practices, American Society for Testing Materials (ASTM), American Concrete Institute (ACI) standards, local codes, and requirements in Chapter 5, Structural. The substation foundation shall be structurally capable of withstanding the live and dead loads of the substation equipment and enclosure occurring during installation, operation, and maintenance of the substation.

10.5.7 Substation Grounding

As a principal goal, the traction power grounding system shall be designed to enhance safety both to personnel and to the overall system. The design of the grounding system shall incorporate measures to minimize any unsafe condition to system personnel, patrons or the community. Each substation shall be equipped with 2"-wide, ¼"-thick copper ground bus and the necessary cabling to a substation grounding grid.

Noncurrent-carrying metal enclosures or parts of alternating current equipment, including ac apparatus and rectifier-transformers, shall be securely connected to the ground grid.

The dc system shall normally be operated ungrounded. The traction power transformer secondary windings shall be isolated from ground.

Enclosures for traction power rectifiers, dc switchgear, and dc busways shall be installed insulated from ground, and each shall be connected to the substation ground grid through a high resistance ground fault detection system. The ground fault detection system shall detect enclosure "hot" as well as enclosure "ground" conditions. ANSI device 64 relays shall be used to detect faults or grounds associated with the dc equipment and enclosures.

Substations shall be equipped with a grounding system consisting of driven ground rods and conductor mats embedded in the earth. The ground mats shall be comprised of stranded 4/0 copper conductors connected by exothermic welds. The ground rods shall be ¾" diameter copper-clad steel and ten foot lengths with 5 foot extensions as necessary. These grid materials shall be resistant to corrosion by the earth's soil chemistry.

Security fencing and walls around the substation enclosure require grounding considerations. Metal fences shall be connected to the grounding system and the grounding system shall extend three feet beyond the fence on all sides to mitigate the risk of step-and-touch potential to personnel outside the fence line. The grounding system shall not extend beyond the limits of non-conducting walls around the substation enclosure.

Maximum step and touch ac and dc voltage shall not exceed the allowable values in accordance with the applicable requirements of the Institute of Electrical and Electronics Engineers (IEEE Standard 80). The grounding system design shall be coordinated with APS and SRP service connection requirements at each traction power substation.

10.5.8 Drainage Cables and Stray Current Measurement

Substations shall be provided with drainage circuit provisions within the negative return system for monitoring of stray current, and implementation of corrosion control measures. Such provisions shall include drainage buses, drainage panels, and junction boxes. The negative return drainage devices shall be installed in the negative cubicle.

10.5.9 Ventilation

The substations shall include a heating, ventilation and air conditioning (HVAC) system to maintain the substation temperature at a level permitting the traction transformers and the rectifiers to operate at their design load cycle. The normal maximum temperature in the substation shall be 85° F. Two condensing units shall be provided and each unit shall be capable of providing the cooling requirements of the substation building. A single air-handling unit shall be utilized with two separate evaporator coils. The condensing units shall be controlled by a duty cycle controller to equalize use of the two units. Temperature shall be controlled by digital programmable thermostats. The HVAC system shall be SCADA monitored (alarm/report) for high temperature, air handler failure, and condensing unit failure. Thermostats shall be SCADA interfaced for remote temperature control. The sizing of the HVAC system shall be based on maintaining an interior temperature of 85° F when the substation is operating at 60% of its nominal rated 100% load and maximum solar loading and environmental heat gain.

10.5.10 Miscellaneous

Auxiliary Power

The power for station services (120/208 Vac) in and about the substations shall be provided. These loads include, but are not limited to, interior and exterior lighting, battery charger, convenience receptacles and climate control.

Uninterrupted Power System

Maintenance-free batteries and a battery charger shall be used as the power source and backup for the essential protection devices and substation equipment control for up to eight hours in the event of a utility power failure. The dc voltage shall be 125 Vdc. A ventilation system to exhaust gases generated by the batteries shall be installed and shall be interlocked with the battery charger to shut down the charging system in the event of ventilation system failure.

Interior and Exterior Lighting

Fluorescent fixtures shall provide indoor lighting, controlled by light switches wall-mounted inside the housing near the doorways. The design shall provide for minimum maintained lighting levels of 30 foot-candles vertical, average. Lighting shall illuminate the vertical surfaces of the equipment, such as switchgear and transformer/rectifier units, and shall be located so as not to create a glare on the front of the devices or meters. Locations of lighting fixtures shall be coordinated to avoid interference with overhead raceways or other major wiring and shall not be directly above switchgear, rectifiers, or transformers.

Outdoor lighting type shall conform to the requirements of the authority having jurisdiction. Lighting shall be controlled with photocells. At a minimum the lighting design shall provide a minimum illumination level of two foot-candles at ground level or as required by the local authority having jurisdiction. The lighting levels shall be attained with not more than three fixtures mounted on each exterior wall. Address lighting is required in some cities.

Emergency Lighting

Substations shall be provided with emergency lighting consisting of rechargeable nickel-cadmium batteries and battery chargers. A relaying device shall be arranged to energize the lamps automatically upon failure of the ac power. The battery charger shall have the capacity to supply rated load for 1.5 hours at not less than 87.5% nominal battery voltage.

Sufficient fixtures shall be provided to illuminate the area as required by code(s).

Convenience Outlets

Not less than four duplex convenience outlets shall be conveniently located around the interior walls of the substation. One 220 volt 40-Amp receptacle shall be provided on a wall adjacent to the main entrance door. Two 20-Amp duplex outlets shall be provided and they shall be separately circuited. One is to be located on the wall behind the switchgear and rectifier to permit use of a heavy-duty vacuum cleaner or up to 1½-horsepower portable air compressor; the second shall be located on an exterior wall of the substation and shall be waterproof and lockable to prevent unauthorized use of power from the exterior power outlet.

Monitoring and Alarm System

The traction electrification system shall be entirely self-protecting and equipped with local monitoring indications and provisions for Supervisory Control and Data Acquisition (SCADA). When installed, the system shall enable monitoring of equipment status and alarms, and other control functions as directed by the Operations Control Center. Substation circuit breaker lockouts shall not be automatically reset by the SCADA system.

A smoke detector system shall be provided within the substation. The smoke detection system shall be annunciated locally and remotely.

The substations are normally unattended, and the design shall provide reasonable protection against intruders and vandalism. An electro-mechanical intrusion detection device on each entry door shall be provided. Any intrusion shall be made immediately known to the OCC.

Safety and Maintenance Equipment

An emergency eye-wash unit shall be provided, suitably located inside each substation enclosure.

Two portable fire extinguishers shall be provided in each substation enclosure.

Separate test cabinets shall be provided in each substation for the testing of draw-out ac and dc circuit breakers.

The main negative bus of each traction power substation shall be connected to the return negative bus through a shunt for current measurement purposes.

Working Space

Working space is an area free of obstruction in front of the meters, service panels and electric equipment, which provides safe access to all electric equipment and metering. Adequate working space shall be provided within the substation enclosure, as prescribed by equipment manufacturers and code requirements.

Emergency Trip Switch (ETS)

Emergency trip switches shall be provided next to each personnel exit within the substation enclosure. One ETS shall be provided on the exterior of the building next to the main entrance door. The exterior ETS shall be protected from unauthorized access with a "Knox" box. The "Knox" boxes shall be dual-locked. The top lock will be keyed for the local fire department and the bottom lock shall be keyed for the Agency.

Work Table

A combination work table/cabinet shall be included against the wall within the substation. Shelving and cubbyholes shall be included beneath the work table for the storage of binders, drawings, and small tools.

Telephone and Data

A telephone shall be installed within the substation for use by authorized personnel (reference Chapter 12.2.2). The telephone service shall be limited to calls within the transit system telephone network. Data access providing TCP/IP connectivity via 10/100/1000 Base-T Ethernet ports shall also be provided within the substation for use by authorized personnel.

Utility Power Supply

The electric utility companies shall provide to each traction power substation 3-phase, 60 Hz power circuits as primary service. The utility power will be supplied at 12,470 volts. The maximum current shall be as determined by the serving utility without requiring a dedicated service. If necessary, alternative primary service voltages for primary power distribution to the traction power substation shall be evaluated during final design and shall be coordinated with the utility supplier. The evaluation shall determine the most cost-effective investment and lowest annual operating cost that will provide adequate and reliable service to the LRT system.

A single 3-phase feeder shall serve each mainline substation. The utility feeder cable design and installation shall be coordinated with the appropriate electric utility for each substation. Utility approval is required for shop drawings of the ac gear and service entrance section (SES). The serving utilities generally provide the ac supply cables, metering equipment and terminations, and make the connections to the traction power substation.

Electrical fault detection and protection for the traction electrification system shall be coordinated with the respective utilities for each point of service.

The ac supply feeders shall be selected in cooperation with the utilities. The primary criteria is as follows:

- The feeders for adjacent substations are to be from different utility substations in order to reduce the probability of a utility power failure affecting adjacent dc substations. If separate utility substations are not feasible then no more than one traction power substation shall be fed from a common utility transformer or bus.
- Also, no electric utility feeder shall supply more than two traction power substations, and these two substations shall not be adjacent to each other.
- A single utility substation transformer shall feed no more than three traction power substations in order to reduce the probability of LRT service interruption during a utility transformer failure.

Conduits, ducts, manholes, and cableways shall be provided for the ac supply cables from the traction power substation to the utility. The cableway requirements shall be coordinated between METRO and the electric utilities.

The ac power supply for each substation shall be metered at the substation. All efforts shall be made to procure a beneficial billing rate. METRO shall coordinate with the electric utilities, their boards, and Arizona Corporation Commission to obtain the most favorable rate schedule and tariffs possible to maintain safe, secure and reliable electric service required for the LRT.

10.6 DC Feeder System

10.6.1 General

The dc feeder system includes the positive dc feeders from the traction power substation to the overhead contact system, the negative dc feeders from the substation to the rails or impedance bonds, and any underground along-track parallel feeders required to locally reinforce the overhead contact system's electrical capacity. The system shall also include raceways, pull boxes, manholes, and associated appurtenances for the routing of the feeder cables.

Feeder conductors shall be insulated, conform to applicable industry standards (ICEA, NEMA, IEEE, UL, etc...), and be suitable for both wet and dry locations. The raceway shall be underground and the design of the ductwork, the embedment depth, and the manhole spacing shall be in accordance with the NEC requirements. The routing of the raceways and ductbanks and locations of manholes and handholes shall be coordinated with the civil and trackway design.

10.6.2 Cables

DC traction power feeder cables shall be insulated, non-shielded, single conductors suitable for use in wet or dry locations and rated at not less than 2,000 Vdc, 90°C conductor temperature for normal operation, 130 °C for emergency operation, and 250 °C for short-circuit conditions. The conductors shall be copper, conforming to ASTM B189 material with class D or G stranding, conforming to ASTM B8, with EPR insulation and low smoke jacket.

Feeders shall be standardized on 750 kcmil for the positive circuit and 500 kcmil for the negative circuits. Multiple conductors for different amperages shall be used. The cables shall have sufficient conductivity to maintain traction power voltage levels at the required level. Traction power feeder cables shall be sized to operate at rated insulation temperature during normal operating conditions.

Traction power cables connecting dc feeder breakers to the overhead contact system and from running rails or impedance bonds to the negative bus shall be sized to accept maximum overload and short-circuit currents with a temperature rise not to exceed safe insulation design limits of the cables. The appropriate number and size of cables shall be determined in conjunction with the traction power system analysis.

The positive and negative traction power cables shall be installed in separate conduits and manholes. Where installed in exposed locations, the positive and negative cables shall be isolated with barriers, and suitably routed and supported on insulated racks or trays to minimize the possibility of incurring physical damage. Flame-resistant jacketed cables shall be used in such installations.

Insulated feeder conductors shall be protected against switching surges and lightning.

No cable splices shall be permitted unless specifically approved by METRO System Engineers. If approved, cable splices shall only be permitted inside suitably sized splice boxes, pull boxes, and manholes.

10.6.3 Raceways

Feeder ductwork shall be underground and consist of Schedule 40 PVC conduit encased in concrete. Design factors of ductwork such as conduit size, maximum cable pull tension, maximum total angular turn, minimum embedment depth below grade, manhole spacing and duct gradient shall be in accordance with NEC requirements. Spacing between feeder manholes shall not exceed 400 ft. A six inches wide yellow warning tape shall identify feeder ductwork. The tape shall be marked "Warning—High Voltage," and be laid 12 inches above concrete encasement in backfill. Concrete encasement shall contain red dye on the top surface of the concrete. Concrete encasement of feeder or communication ductbanks is not required under the substations; in lieu of concrete encasement, Schedule 80 PVC or PVC coated GRS conduit can be used. 90° bends shall have a minimum 5-foot radius.

Feeder ductwork shall be run as directly as practicable and located to avoid conflicts with foundations, piping and other similar underground work. Risers consisting of conduit shall be provided at feeder connections to the overhead contact system.

Manholes, handholes and pull boxes shall be located to facilitate installation of the cables. Feeder manholes and/or pull boxes shall be located just beyond the ground grid and then every 300 ft. to 400 ft., and at 90° horizontal bends where the length beyond the bend is greater than 150 ft. The selection of a manhole or a pull box shall be on a site-specific basis. The number of ducts to be installed shall have one spare duct per circuit to permit additional or replacement cables to be pulled.

Conduit stub-ups or risers to OCS poles shall be through concrete encased PVC coated GRS or Schedule 80 PVC conduits.

10.7 Overhead Contact System

10.7.1 General

The Overhead Contact System (OCS) consists of the Overhead Conductor Subsystem (OCSS) and the Physical Structure and Support Subsystem.

The Overhead Conductor Subsystem consists of the conductors, including the contact wire and supporting messenger wire (where used); in-span fittings; insulation; jumpers; conductor terminations; and associated hardware located over the track from which the vehicle draws power by means of direct physical contact between the pantograph and contact wire. The OCSS shall provide for satisfactory current collection under all operating conditions.

The Physical Structure and Support Subsystem consists of foundations, poles, guys, insulators, brackets, cantilevers, and other assemblies and components required to support the OCSS in the appropriate overhead configuration. The support system shall support the OCSS in accordance with allowable loading, deflection, and clearance requirements. The OCS supports throughout the system shall incorporate double insulation.

Traction power shall be distributed by the OCS, which shall consist primarily of sections of auto-tensioned (constant tension) simple catenary and single contact wire, and sections of fixed-termination (variable tension) simple catenary and single contact wire. The selection between the different configurations of the OCS is dependent on factors such as aesthetics, vehicle speed, operations, economics, local conditions, and the environment.

Where possible, the system shall consist of a Low-Profile Simple Catenary Auto-Tensioned system (LPSCAT). The contact wire shall be supported from a messenger wire by means of hangers. Center poles located between the tracks when space permits shall support the overhead contact system. At locations such as crossovers, turnouts, track sidings, street intersections and restricted rights-of-way, side poles may be used as required.

Underground along-track parallel feeders shall be utilized where the capacity of the overhead contact system cannot satisfy the electrical load requirements. Underground along-track parallel feeders shall typically be utilized to reduce voltage drop and increase the system capacity. See dc Feeder System for further information on the along–track feeder.

10.7.2 Sectionalization

Electrical continuity of the OCS sections shall be provided with disconnect switches. At the substations, the OCS shall be sectionalized to provide isolation of each electrical section. An arrangement providing continuity and flexibility in operation of the system, while any substation or OCS section is out of service, shall be incorporated. In addition to sectionalizing at the substations, the OCS shall be sectionalized at cross-overs or other special trackwork locations, and in the yard, to provide for OCS section isolation and operation around out-of-service tracks.

The MOE building shall include insulators and switching at the door openings for energized tracks. The switching shall accommodate opening and closing of the doors. Roll-up type doors shall require an OCS door bridge isolated on each side with section insulators. Doors that allow continuity of the OCS through the doorway shall require one section insulator installed outside the doorway above the insulated joints. Circuit breakers and disconnect switches shall provide the capability to sectionalize the power feed to the OCS as required. Pole-mounted disconnect switches shall be installed at special trackwork locations to facilitate bypass feeding of crossovers and turnouts during outage conditions.

The design of section breaks shall utilize an insulated air-break or insulated overlap. At double-track locations, the air-break/overlap shall be applied to both tracks. Mechanical section insulators shall be used only at special trackwork locations and in the Yard/MSF.

Jumper cables shall maintain electrical continuity at special trackwork locations where it is necessary to have a physical separation in the OCS. At locations where jumper cables are used to provide full-feeding electrical continuity, they shall equal the electrical capacity of the OCS circuit capacity.

10.7.3 Disconnect Switches

Disconnect switches shall be manually-operated no-load break type, designed for dc transit systems, and rated for the system voltage and anticipated current loads. Each feeder circuit shall be controlled by a disconnect switch. The disconnect switches shall be hot-stick operated for street running track. The disconnect switches for the Yard or in exclusive fenced rights of ways shall be equipped with operating handles. In both conditions, provisions for tagging and padlocking of the hot-stick or operating rods shall be made. Disconnect switches shall be mounted on the OCS poles. The switch-operating positions shall be uniform throughout the LRT system to minimize operating errors, and the positions shall be clearly marked at the operating handle.

10.7.4 OCS Configuration

Within street-running areas, the mainline OCS configuration shall be low-profile simple catenary where deemed necessary to satisfy urban design considerations. The system height at supports shall be 30" minimum. At other locations on the mainline, the OCS shall use a 36" to 48" (nominal 42") system height and the supports shall be styled in a manner similar to the low-profile catenary. Auto-tensioned single contact wire can be used for cross-overs and shall be implemented on the mainline only when deemed necessary to satisfy urban design considerations; at other locations auto-tensioned simple catenary shall be used. Underground along-track parallel feeders (negative and positive) shall be implemented and connected to the OCS at frequent intervals when necessary to supplement the capacity of the system.

In vehicle storage and maintenance facility areas, the single contact wire configuration shall be utilized where it is electrically sufficient.

Both Low-Profile and Simple Catenary Auto-Tensioned System (LPSCAT & SCAT) shall be utilized on the mainline. Simple Catenary Auto-Tensioned system heights are 36" to 48". The LPSCAT system height shall be 30". Both the SCAT and LPSCAT shall consist of a messenger wire supporting a contact wire by means of hangers. The conductors shall be tensioned by means of counterweights. The conductors shall be supported from single or back-to-back bracket arms attached to poles, and from cross-spans and pull-offs. The poles shall be painted or galvanized tapered tubular and/or decorative tubular type. Balance weight anchor poles shall be internally weighted.

A Single Wire Auto-Tensioned system (SWAT) can be used at special trackwork areas when required due to visual impact and urban design considerations. The SWAT system shall consist of a contact wire supported from single or back-to-back bracket arms attached to poles, cross-spans, and pull-offs. At special trackwork areas, the OCS shall be auto-tensioned by counterweights. The poles shall be tapered tubular or decorative tubular type. Underground along-track parallel feeders shall be implemented and connected to the OCS at frequent intervals for SWAT configurations on the mainline as necessary and determined by traction simulations. A Single Wire Fixed Tension system (SWFT) may be used in the yard and MSF areas. The SWFT has a single contact wire that is supported by means of single or back-to-back pole-mounted cantilevers, bracket arms, cross-spans, and pull-offs. In the MSF, the contact wire is supported from the building structure. The poles shall be tapered tubular. Underground parallel along-track feeders are typically unnecessary due to the low vehicle operating speeds, but shall be installed and connected frequently to the contact wire when it is necessary to satisfy electrical load requirements of the system.

10.7.5 Operations

The design of the OCS shall be based on technical, economical, operational, and maintenance requirements, as well as on the local climatic conditions. The minimum and maximum temperature for design considerations is 25° F and 145° F. The OCS design shall be coordinated with the vehicle dynamic performance characteristics to ensure that current collection is maintained within acceptable limits. The OCS shall also accommodate the physical characteristics of the vehicle and the performance requirements of the auxiliary systems associated with the car, i.e. clearance envelopes, auxiliary power supply voltage, etc.

The OCS shall be designed for multiple pantograph operation with pantographs spaced in accordance with the specified train consists. The OCS shall allow the train consists to operate with one to four pantographs without causing excessive oscillation of the overhead contact system, or pantograph bouncing or arcing. The overhead contact system shall be designed according to the current American Railway Engineering and Maintenance of Way Association (AREMA) recommendations.

10.7.6 Contact Wire Height

The nominal contact wire height for various alignment segments shall be in accordance with the NESC Table 232-1 (C2-2002) as follows:

Alignment Type	Wire Height Above Rail Minimum
Segregated right-of-way	16'-0"
Mixed-used, pedestrian only (restricted vehicles)	16'-0"
Mixed-use with road vehicles	18'-0"
Mixed-use with railroad	22'-0"

Note – These values are provided for the worst combination of tension, sag, temperature, construction and maintenance tolerances.

The nominal contact wire height shall be in accordance with the requirements of the NESC. Exceptions shall be addressed on a site-specific basis, and subject to METRO approval. The contact wire installation height at supports shall take into consideration the effect of wire sag, due either to temperature rise or installation tolerance (including track construction and maintenance tolerances).

At critical locations (i.e. restricted clearance under bridges) or fixed trackwork points (grade crossings, embedded or direct fixation trackwork), no allowance need be made in the OCS design for track lift. At non-critical locations, the catenary system design shall allow for a future ballasted track lift of up to three inches.

When changing from one contact wire height to another, the transition of the height shall be changed gradually to prevent pantograph bounce and arcing. The maximum gradients for contact wire change in elevation relative to the track elevation, shall be in accordance with the AREMA Chapter 33 as follows:

Speed Limit/Location	Maximum Gradient
Yard	2.3%
30 mph	1.3%
45 mph	0.8%
60 mph	0.6%
65 mph	0.5%

Except for the yard, the change of grade from one span to the next shall not exceed one half of the value shown for the associated speed limit.

10.7.7 Loading

Structural loading shall be based on NESC Rule 250-B, Combined Ice and Wind Loading, "light" loading district:

- 16.4-lb/feet² horizontal wind pressure
- 0 in. radial ice on conductors
- 0.05 lb/feet constant added to the resultant
- +30 degrees F (-1 degrees C) temperature

10.7.8 Spans Length and Staggers

The contact wire shall be staggered on both tangent and curved track. Stagger is the deliberate lateral displacement of the contact wire at each support to the left or right of the track centerline. The span lengths (spacing between messenger wire or single contact wire support points) and staggers shall be designed to provide for pantograph security (mitigate pantograph dewirement) and to maintain good current collection and uniform wear of the pantograph carbon collector. The maximum amount of stagger shall be used and should be no less than 10" to 12" on mainline tangent track.

On tangent track, the wire is staggered primarily to achieve uniform wear of the pantograph carbon collector strip. On curved track, the stagger achieves the tangent/chord construction necessary for the "straight-wire" catenary to negotiate the curve.

Pantograph security is established by restricting the maximum contact wire displacement to ensure a minimum distance (from the contact wire to the end of the pantograph collector strip) of two inches under worst operating condition.

In order to maintain the contact wire on the pantograph head, the design factors to be considered shall include OCS conductor blow-off, contact wire height, contact wire stagger, contact wire midspan offset, contact wire stagger effect on tangent, contact wire deviation due to movement of hinged cantilevers, mast deflection due to imposed operational loads, vehicle roll and lateral displacement, width and sway of pantograph, track tolerances, OCS erection tolerances, pantograph shape effect, and a pantograph security factor.

The design shall consider the effects of environment, track geometry, vehicle and pantograph sway, and installation and maintenance tolerances. Vehicle roll into the wind shall be taken equal to be 50% of the maximum dynamic roll value, in accordance with the Wind Deflection section in AREMA Manual, Chapter 33, Part 4.

To minimize the possibility of harmonic oscillation in the catenary system, not more than five equal spans shall be located successively in areas where LRV speed is expected to exceed 55 MPH. A span, which is at least 10% shorter, shall be inserted to minimize the possibility of any sympathetic oscillation.

10.7.9 Catenary Conductors

The contact wire shall be solid grooved hard-drawn copper, conforming to ASTM Specification B47 (size: 350 kcmil).

The messenger wire shall be standard hard-drawn copper, conforming to ASTM Specification B189, (size: 500 kcmil), with stranding conforming to ASTM Specification B8, class B or higher.

In the design for contact wire conductor selection, the following shall be considered:

- 20% loss of section for current carrying capacity for traction power system analysis.
- 30% cross-section area loss for LPSCAT or SWAT due to wear of contact wire for mechanical loading and replacement.
- 20% cross-sectional area loss for LPSCFT or SWFT due to wear of contact wire for mechanical loading and replacement.
- The effect of temperature change on all conductors

The conductors shall be rated to thermally withstand solar heating of 150° F (71.1° C) and maximum operational power loads without becoming damaged electrically or mechanically, or exhibiting signs of annealing.

10.7.10 Construction and Maintenance Tolerance

The purpose of the catenary system is to provide electrical power to the LRV, via the pantograph collector. Consequently, it is vitally important that the contact wire is installed correctly above the as-built trackwork. Construction tolerances shall be:

Contact wire height (CWH) shall be 0" to +3" at all locations

Messenger wire lateral displacement (relative to contact wire): +/- ½" at support

Maintenance tolerances shall be developed during final design.

10.7.11 Poles and Foundation

The OCS support poles may be painted tapered tubular or decorative tubular based on the local conditions and urban design requirements. Center pole construction is preferred, but side pole construction is acceptable where required. Pole locations and design shall be coordinated with dc feeder riser locations and track designs. OCS support poles on the yard lead and storage can be H sections.

The pole heights for each pole type shall be as uniform as practical to limit the number of required spares. Exceptions shall be considered on a case-by-case basis only when a standard pole height is deemed to be perceptibly inappropriate.

Where necessary, OCS poles may serve as joint-use lighting or signal poles to support street illumination fixtures, traffic signals, and LRT signals. The pole loading calculations shall include consideration of these other elements.

The poles shall support low profile catenary and/or single contact wire configurations. The pole finish shall be in accordance with the Urban Design Criteria. All poles, except those on existing overpass or underground garage structures, shall be installed on cast-in-place reinforced concrete foundations by means of embedded anchor bolts. On the structures, the poles shall be supported by means of anchor bolts installed through the deck or cast into piers. Poles shall be grounded by a bonding cable attached between the pole base plate and a ground plate installed as part of the foundation. The pole base plate, foundation bolts and reinforcing bars shall be connected with exothermic welds to 5/8" diameter by 10' long ground rod(s) adjacent to the foundation. Poles shall be grounded and the pole strength and load rating shall be in accordance with NESC Rules 250 and 260.

Anchor bolt patterns shall be selected to provide coordinated relationships between poles and foundations. The coordination shall be based on matching strength and minimizing the number of required configurations.

Foundation design shall be coordinated with the track designers and underground utilities, and shall meet the seismic requirements of Chapter 5, Structural. The design and construction of the pole foundation and guy anchor foundations shall conform to established civil and structural engineering practices, ASTM and ACI standards, and other applicable codes. The foundations shall be reinforced concrete and shall be capable of withstanding the design load imposed during installation, operation, and maintenance. Foundations shall be designed to limit the total effect of foundation rotation and pole deflection during train operating conditions to two inches at the contact wire level. Pole deflection at the top of the pole under NESC light loading conditions shall be no more than 2% of pole length. Overload factors shall not be applied in the calculation of pole deflection.

10.7.12 Electrical Clearances

The following clearances shall be maintained between live conductors (including pantograph) and any grounded fixed structures in accordance with the AREMA Manual, Chapter 33 Part 2 as follows:

	Static	Passing
Normal Minimum	4"	3"
Absolute Minimum	3"	3"

Static clearance is the clearance between any live portion of the overhead contact system, and any grounded structure, when not subject to pantograph pressure.

Passing clearance is the clearance between any live portion of the overhead contact system or pantograph and an overhead structure under actual operating conditions, during the time it takes the train pantographs to pass.

Mechanical clearance from the pantograph to any fixed item, excluding the steady arm or registration pipe of the cantilever, shall be not less than 3 inches. Clearance to steady arms and registration pipes shall not be less than 1½ inch.

For vehicle-related clearances, full allowance shall be included for dynamic displacement of the vehicle under operating conditions (including track and other installation and maintenance tolerances).

10.7.13 OCS Support Assemblies

Various overhead support systems are required to suit different styles of OCS and applications. The OCS support assemblies shall be double insulated to limit leakage currents, and to permit "live-line" maintenance operations.

Cantilevers

The general type of OCS support for double-track is center-pole with back-to-back cantilever brackets. The mast attachments shall be fitted with hinge pins to permit along-track movement of the OCS conductors due to temperature change. The cantilevers shall be of three general types: the single contact wire type for use with direct suspension contact wire, the simple catenary tangent track cantilever, and the simple catenary curved track cantilever. Long-reach cantilevers shall be implemented with a reach of up to 18' from center-of-pole to center-of-track. Beyond 18' reach, cross-spans shall be used if possible in conjunction with urban design coordination.

Cross-spans

Cross-spans shall be used on the mainline to support the OCS where poles are difficult to place adjacent to the track, or in multi-track situations, i.e. storage sidings. In the yard, single-wire cross-spans shall be utilized for multi-track situations or for crossing intersections. Standard OCS poles and assemblies shall be used when cross-spans are not feasible.

OCS Attachments to Existing Structures

Existing structures in this section describe buildings, roadway structures and overpass bridges currently along the LRT alignment. Attachments or foundation provisions may be required at certain undercrossing and overcrossing structures. Attachments to such existing structures shall be coordinated with the appropriate governing authorities, owners, and stakeholders. Structural analyses shall be performed to verify that the OCS attachments and foundations are secure, safe, and aesthetically acceptable. Grounding provisions shall be confirmed or added as required to ensure that the supporting structure is effectively grounded.

No attachments shall be made to undercrossing structures except where clearance limitations or along-track length of the structure make attachment a necessity. To minimize pantograph bounce, and loss of contact between the pantograph and contact wire, a soft flexible suspension assembly shall be used.

OCS support foundations shall not be located on overcrossing structures or decks except in situations where the structure span is greater than the allowable OCS span.

Attachments to existing building or pole structures may be required to support the OCS, especially at curves in the alignment. The use of new support poles shall be preferred over making attachments to existing buildings. Existing lighting, power and traffic poles shall not be used to support OCS elements.

10.7.14 OCS Tensioning

Counterweights shall be cast iron or lead mounted within tubular poles. The material shall be proven suitable for the loads and climatological conditions of the system.

10.7.15 OCS Grounding and Bonding

The OCS poles shall be properly grounded in accordance with NEC requirements. All OCS poles shall be grounded via ground rods. Separate ground rods shall be provided for each surge arrester.

The resistance of individual pole structures shall be maintained at a maximum of 25 ohms. A ground stud shall be provided on each pole, to which a ground jumper shall be bolted. Poles shall be grounded by a bonding cable attached between the pole and a ground plate installed as part of the foundation installation. The ground plate shall be connected to the foundation reinforcement cage connected to a 5/8" diameter by a 10' long or longer ground rod. If necessary, additional ground rods shall be installed to achieve the minimum required grounding resistance.

Ground connections to disconnect switches and ground leads on all surge arresters shall have a maximum ground resistance of five ohms. Each device shall be connected directly to a dedicated grounding electrode(s). Ground rods shall be connected to form the grounding system to obtain the required ground resistance. Grounding requirements shall be applied to affected metallic structures, fences, bridge screens, etc., within or adjacent to the system ROW.

10.8 Negative Return System

The negative return system design shall be in compliance with this section and coordinated with Chapter 4, Trackwork, and Chapter 11, Signaling.

The running rails shall be used as the primary circuit for the negative return current. In order to minimize dc leakage current each running rail shall be insulated from direct contact with the ground by the use of insulating pads at tie locations, and/or insulated pads and boots when direct fixation or embedded track is used.

At locations requiring insulated joints, impedance bonds shall be used to maintain continuity of the dc negative return circuits. Rail bonding jumpers across mechanical joints shall be a minimum of two 250 kcmil bare copper cables per rail. Cross bonding between tracks shall be required to control voltage rise in the running rails. In signaled areas, the running rails shall be cross-bonded through impedance bonds as often as the signal system permits.

Negative return cables shall be welded and electrically bonded. The bonding connections shall be suited for the size cables used to ensure adequate current-carrying capacity. Where it is necessary to have a bolted connection, the bolted joints shall also be electrically bonded.

The negative return rails in the MOE shall be grounded. Insulated joints shall be installed at the entrances to the yard and to the MOE building to prevent any connection between the grounded rail return system in the MSF and the rails in the yard, or between the yard rails and the ungrounded main line tracks.

Pad mounted rail bypass disconnect switches shall be installed at the Yard/Mainline interface to allow interconnection of the segregated track under contingency operations. The Yard/Mainline rail bypass disconnect switches shall be key-interlocked with the OCS bypass disconnect switches to prevent opening of the rail switch until the OCS switch is opened, and to prevent closing of the OCS switch until the rail switch is closed. Negative return feeders to the substations shall be insulated.

Cross bonding of tracks shall be done every 1,500 ft. to 2,000 ft. to equalize return rail voltages.

10.9 Corrosion Control

Designs shall incorporate provisions that mitigate stray currents and provide means of monitoring potential stray current conditions according to this section and Chapter 19, Stray Current and Corrosion Control. As a minimum, running rails shall be isolated to the extent practical from ground by the use of insulating pads at tie locations, and/or insulated pads and boots when direct fixation or embedded track is used. Cross bonds shall be installed as practical, and as the signal system allows. The mainline traction electrification system shall be isolated from the yard and MSF traction power systems.

In addition to the corrosion control devices in the traction power substations, the corrosion control system shall be comprised of cables, raceways, manholes and interface pullboxes located between the substation and the tracks. The drainage panel shall be comprised of a minimum of four circuits. Each negative cable connection point shall be equipped with a single-pole disconnect switch, diodes, variable resistor shunt, and current limiting fuse.

10.10 Traction Power Remote Control

Remote control and indication functions shall be provided to enable rapid and accurate control and monitoring of the traction electrification system operation from a central control point. In addition to control and monitoring functions of the ac, dc and bus systems switchgear in the substations, fire and intrusion alarm detection shall also be incorporated. Substation circuit breaker lockouts shall not be remotely reset.

10.11 Light Rail Vehicles

The traction electrification system design shall be in compliance with these sections and coordinated with Chapter 8, Vehicle.

The traction power and distribution system design shall be coordinated to ensure compatibility with the light rail vehicles, i.e. the LRV propulsion system and auxiliaries shall accept the full range of traction power voltage variations.

The traction power supply and distribution system shall be designed for natural reception only from vehicle regenerative braking. No power shall be fed back to the utility.

Chapter 11.0

Signaling

11.0 SIGNALING

11.1 Introduction

The purpose of this chapter is to establish the standards and design policies for the Signal System on the METRO LRT Project. The Signal System, which includes the functions of signal protection, grade crossing protection, and traffic signal coordination, shall be designed to allow METRO transit vehicles to meet the required line capacity, while providing a safe, and operationally flexible system.
The Signal System shall provide for the following distinct types of signaled areas on the METRO LRT Project, as applicable (See Chapter 1 for more complete definitions):

Exclusive rights-of-way are for light rail transit vehicle operation only, with wayside signals and grade crossing protection where necessary.

- Shared Exclusive rights-of-way are for both light rail transit vehicle operation and freight rail operation by the UPRR, using wayside signals and grade crossing protection where necessary.
- Semi-Exclusive rights-of-way, with a dedicated trackway typically separated from other traffic by physical barriers such as non-mountable curbing or fencing. Access into the operating environment by other vehicles or people is prohibited except at defined, controlled grade crossings. This type may or may not be signaled, depending upon site-specific conditions, such as distance, visibility, operating speed, and other operational requirements.
- Non-Exclusive rights-of-way with motor vehicle traffic, but with a dedicated trackway physically separated from motor vehicle traffic lanes, except at intersections. This type may or may not be signaled depending upon site-specific conditions, but shall be provided with circuitry to influence the operation of traffic signals.

In Exclusive and Shared Exclusive rights-of-way (where distance, operating speed, or other factors make full signaling advantageous), transit vehicle movements will be controlled by the vehicle operator, but shall be governed by an Automatic Block Signaling (ABS) System in accordance with the AREMA Communications and Signal Manual of Recommended Practices (AREMA C&S Manual). At-grade crossings in ABS territory shall be protected by Automatic Highway Crossing Warning (AHCW) systems.

In Semi-Exclusive or Non-Exclusive rights-of-way where the rail is in the median of the roadway or in reserved lanes, the progression of METRO transit vehicles through intersections shall be governed by LRT (bar) signals controlled by street traffic control systems (where provided). Signaling shall be provided in Semi-Exclusive rights-of-way where operational and safety needs so dictate. Where rail signaling will be provided, and vehicle operating speeds and motor vehicle traffic conditions dictate the need for warning systems, road crossings shall be equipped with AHCW systems. A transit signal priority strategy shall be utilized to facilitate the movement of rail traffic, where agreed to by the local authority through the Inter-Governmental Agreement.

Because safety of operations will be primarily the responsibility of operator adherence to operating procedures and polices, where signaling is utilized, automatic train stops will not be provided.

Input to street traffic controllers shall be provided by a combination of predictive priority detection loops (provided in the street traffic control system design), Train-to-Wayside Communications (TWC), where required, and/or by Signal System track circuits as applicable. Transit vehicle and street traffic systems along the METRO LRT project shall be designed and operated as a complete integrated system.

As an integral component of the Supervisory Control and Data Acquisition (SCADA) system, a vehicle tracking subsystem shall be provided to monitor status and provide appropriate controls to manage the METRO operation in signalized territory. Control shall be provided from the Operations Control Center (OCC) and/or MSF via SCADA, locally via the TWC subsystem (as specified), as well as via wayside local control panels located in the signals equipment housing or room. In non-signaled territory, vehicle tracking shall be provided by the GPS based Automatic Vehicle Location (AVL) subsystem integrated with SCADA.

11.2 Functional Design Requirements

The Signal System shall use proven systems, which utilize state-of-the-art, "off-the-shelf", standard equipment and components to the greatest extent possible. The Signal System shall provide the highest levels of reliability, maintainability, and safety. The Signal System shall have an expected service life of 15 years at the specified levels of service. Specific requirements for Signal System equipment designs shall be provided in the procurements documents. "Proven systems" shall be defined as systems or system components that are now in use and performing well on similar Operational Light Rail Transit Systems in North America or Europe, and have been performing successfully and trouble-free in revenue service for at least five years.

- The Signal System shall be fully compatible with the Rail Communications System, Traction Electrification System, trackwork, and the METRO light rail vehicles.
- Elements of the Signal System that affect the safety of persons or equipment are considered to be vital and shall be designed using fail-safe design principles in accordance with the AREMA C&S Manual of Recommended Practices. Any single detectable failure or combination of undetectable failures shall not cause an unsafe condition to occur.
- The Supervisory (SCADA) system that provides the interface to accept requests for control or provide indications to the OCC controllers is considered to be non-vital. This non-vital system shall interface with the vital systems. Following control requests by the non-vital system, the vital systems shall provide the fail-safe decisions to determine the appropriate response and action.
- Vital circuits shall be designed using standard signaling techniques. They will be positive energy, single break within housings. All vital circuits exiting a housing or room shall be double break.

- Vital microprocessor-based systems (if used in lieu of vital relay logic) shall be proven, fail-safe, fault-tolerant systems of high reliability, and a type proven to have a high Mean Time Between Failure (MTBF) in operation. All vital microprocessor systems must be certified as conforming to all AREMA and FRA standards governing vital processor equipment in effect at the time of purchase.
- Non-vital circuits will utilize high-reliability solid-state technology for all non-vital logic, minimizing the use of non-vital relays. Failure of non-vital equipment shall not affect the safety of the system.

11.3 Operational Design Requirements

In the design and implementation of the Signal System, the following operational constraints and assumptions shall apply:

- Where signaled, the system shall support headways dictated by operational requirements and supported by the Traction Power System design.
- The Signal System shall be designed to operate automatically to the maximum extent possible. This includes automatic routing, dispatching, station departure control, and other ATC functions.
- The Signal System shall be designed such that, under normal conditions, all routing is done locally without requiring direct intervention from OCC.
- The Signal System shall be designed such that loss of communications from/to the OCC will not directly result in any degradation of service.
- The Signal System shall provide for lower level of service under certain failure scenarios including, but not limited to, utility power loss, loss of vehicle communications or TWC subsystem failure.
- LRVs location and movements throughout the main line and in the Yard shall be displayed and supervised at OCC and/or in the MSF continuously, using track circuits and where not signaled via the AVL subsystem.

Emergency local control shall be provided for all signaled crossovers from a Local Control Panel (LCP) located in the signal equipment room or building near the crossover. The LCP shall show a graphical representation of the crossover and adjacent track plan, switches, signals, and all other relevant physical features. The LCP shall allow an operator to independently operate switches and request routes over the crossover, when authorization from OCC has been provided. The LCP must include all necessary hardware and software to ensure that access to, and control of, the LCP will be limited to authorized persons only. The LCP is to be oriented and aligned within the enclosure to provide a parallel geographical orientation of the tracks.

11.4 Environmental Design

All Signal System equipment shall be designed to operate in site temperature conditions that represent the 50-year highest and lowest temperature of record and at a non-condensing relative humidity of 95% at a temperature of 30° C (86° F).

11.5 Electromagnetic Interference (EMI)

The Signal System, and all of its subsystems, equipment and components, shall be designed and installed to be electromagnetically compatible with its environment. The following considerations shall be taken into account in the design of the system:

- Track circuit design shall not permit EMI from any source, such as traction power, power supplies, Communications System, light rail vehicle systems, or other wayside equipment, to interfere with its operation.
- Selection of audio frequencies for track circuits, where utilized, shall minimize interference and crosstalk to a level that will not cause an unsafe condition.
- Amplifiers shall be utilized to boost signal-to-noise ratios, and repeaters shall be utilized to regenerate signals, where applicable.
- Shielded wire, twisted pair cables, and rigid steel conduit, if necessary, shall be utilized for EMI noise mitigation measures.
- Proper grounding and bonding of apparatus, conductor shields, and raceways, shall be provided to maximize shielding and minimize circulating currents.
- Surge protection against lightning and other natural sources of EMI shall be provided.

11.6 Growth and Expansion

The Signal System design shall include the following provisions to allow for future growth and expansion of the system:

- At end-of- line equipment house locations, considerations shall be incorporated into the system design and hardware configurations to minimize the effort of expanding the Signal System when subsequent extensions are designed. Additional space shall be provided in housings for the installation of future equipment. Signal System power supplies and the house utility service drop shall include sufficient capacity to accommodate any proposed system expansion. The Signal System designer shall base the precise amount of additional space and utility capacity to be provided upon an analysis of future system requirements. Such analysis shall be provided to, and agreed upon, by METRO.
- The design of individual racks and terminal boards shall include sufficient space for the installation of future equipment and cable.
- Provisions shall be incorporated into the design of control and indication circuits to OCC for a logical expansion of the system.
- Vital microprocessor-based systems shall support up to 2 spare vital serial links for communications for future interfaces to additional microprocessor-based systems. The system shall have a total aggregate capacity to process up to 3000 straight line relay equivalent logic equations per second, not including any redundancy requirements needed to meet the specified availability requirements for its site-specific configuration. Non-vital serial communications shall provide for transmission of data between the processor and SCADA, TWC, street traffic systems, as well as an EIA-compatible

modem for future remote communications. Where required, communications between vital microprocessor-based systems shall be provided via the Fiber Optic Carrier Transmission System.

11.7 Codes and Standards

The Signal System shall conform to the applicable requirements of the codes and standards listed herein, as well as all local codes and ordinances, unless specified otherwise. Where the requirements stipulated or referenced conflict, the more stringent shall apply. Unless specifically noted or approved, the latest edition of the code or standard at the time of design shall apply.

The design, installation, and test of the system shall meet the applicable codes and standards, or portions thereof, of the following:

- American Railway Engineering and Maintenance of Way Association – Communications and Signals Manual of Recommended Practice (AREMA C&S Manual).
- American Society for Testing and Materials (ASTM).
- American National Standards Institute (ANSI).
- Electronic Industries Association (EIA).
- Federal Railroad Administration (FRA), Title 49, Part 236 (including Subpart H).
- Federal Railroad Administration (FRA), Title 49, Part 234.
- Federal Transit Administration (FTA).
- APTA Recommendations and Standards.
- Arizona Department of Transportation, Public Transportation Division
- Institute of Electrical and Electronics Engineers (IEEE).
- Insulated Cable Engineers Association (ICEA).
- Manual on Uniform Traffic Control Devices (MUTCD), Parts 8 and 10.
- National Fire Protection Association (NFPA).
- Underwriters' Laboratories (UL).

For use of shared right-of-way with other railroads, design and operation shall conform to joint FRA/FTA policy.

11.8 Signal Circuitry

The Signal System shall be a vital microprocessor-based control system. The Signal System shall incorporate fail-safe designs to check and control all safety critical functions concerning track switch operation, vehicle occupancy status, wayside signal indications (in ABS territory), and route security.

In ABS territory, the Signal System shall perform the following functions:

- Continuous positive presence detection of all vehicles.
- Safe vehicle separation governed by the worse case safe stopping distance.
- Interlocking switch control circuitry (e.g., route locking, detector locking, time locking, and approach locking) to prevent switch machines from unlocking or moving while a transit vehicle is approaching or traveling through a switch section, and to prevent vehicles from approaching or entering a switch section unless the route is verified to be aligned and locked.
- Aligning and locking routes at all merging and diverging route locations, as operational needs mandate. Sectional release of route locking shall be provided as operational needs dictate.
- Malfunctions in the Signal System shall be self-detecting, where possible and practical. Circuits that affect safety are considered to be vital and shall be designed on the closed-loop principle, such that any failure in the circuit shall result in the opening of the circuit, which in turn shall leave the circuit in a safe condition and provide the capabilities for an alarm state.
- Control highway and pedestrian grade crossing functions, where utilized.

11.9 Train-to-Wayside Communications (TWC)

A TWC sub-system shall be provided to locally request and cancel normal operating routes, activate Automatic Highway Crossing Warning (AHCW) Systems (where applicable and not approach activated), and provide input to street traffic control systems, as operational requirements dictate. TWC shall be provided at:

- Terminal stations, to permit a vehicle operator to request a route out of the station platform without assistance from OCC.
- Normal yard entrance and exits, to permit a vehicle operator to request routes into or out of the yard lead without assistance from OCC.
- Designated locations prior to any diverging route track switch in order to allow the route to be cancelled or automatically aligned.
- Pocket and siding track exit points, to permit a vehicle operator to request local routes without assistance from OCC.
- Designated locations along the alignment to permit request and/or cancellation of grade crossing gates.

The TWC shall include all hardware and software as required to support error detection and corresponding re-transmissions in its data communication.

The Signal System supplier shall design, provide, install and test all of the car borne and wayside TWC equipment. The TWC shall be fully coordinated with other Signal System equipment, vehicle propulsion and space limitations, and the Communications System.

11.10 Storage Yards

The control of vehicles in the main storage yards shall be by line-of-sight rules and under the supervision and control of a Dispatcher utilizing SCADA for the train tracking and video monitoring by a CCTV subsystem.

Yard switches shall be hand-operated, power-operated with dual control, or a combination of both, as required by operational requirements. All yard switches shall be trailable. Power-operated track switches, where utilized, shall operate from the Local Control Panel (LCP) located in the MSF office and OCC/MSF SCADA terminal, and shall include switch point indicators for facing point moves. A non-vital detector-locking scheme shall be provided for all power-operated yard track switches.

11.11 Switch Machines

Track switches in signaled main line areas shall interface with the Signal System. All track switches shall provide switch position indication in accordance with Section 11.12.3.

Switch machines on mainline track in non-street running areas shall:

- Be a proven design as required by Section 11.2;
- Operate using electric power, which shall be from the signal power line or from a commercial 120 V ac power source rectified to 110 V dc;
- Conform to all FRA and AREMA standards for power-operated rail switch machines;
- Mechanically couple the switch-operating layout to the switch points. Throw rods shall be insulated in signaled areas;
- Provide a means for locking to prevent switch point movement when points are in full normal or full reverse positions;
- Provide a circuit controller for indication that the switch points have been moved to, and are in the full normal or full reverse positions;
- Use a separate, dedicated rod on the switch point for operation of the circuit controller;
- Be equipped with a means to throw the points manually; and

Switch machines on mainline track in street running areas shall:

- Be a proven design as required by Section 11.2;
- Be trailable;
- Be embedded in the street;
- Provide for operation from on-board the transit vehicle; and
- Be equipped with a means to throw the points manually.

11.12 Signals

In Semi-Exclusive and Non-Exclusive rights-of-way, LRT (bar) signals, controlled by the street traffic control systems (with input from the Signal System where provided) shall be located at the limits of signaled crossovers to control entry to protected routes. To the maximum extent possible, crossover limits shall be coordinated to jointly use Overhead Catenary System (OCS) poles for installation of the LRT signals.

In Exclusive and Shared Exclusive rights-of-way (ABS territory), signals shall be standard railway color light type, utilizing light emitting diodes (LEDs), and conforming to the AREMA C&S Manual of Recommended Practices.

In Semi-Exclusive and Non-Exclusive rights-of-way, illuminated switch position indicators shall be utilized at facing point switch locations. Indicators shall be low profile and mounted between the rails (1" above TOR, maximum).

Signals shall be provided with lenses that provide for close-up observation and high long-range visibility to the vehicle operator.

11.12.1 LRT (Bar) Signal Aspects

Aspect	Indication
No Aspect	Stop, Contact OCC
Horizontal White Bar	Stop
Vertical White Bar	Straight Route - Proceed on Primary route, prepared to stop short of any vehicle or obstruction.
Flashing Horizontal or Vertical White Bar	Route change in process.

11.12.2 Color Light Signal Aspects

The fundamental aspects of color light signals at mainline interlockings will be as shown below, or as further developed by METRO as operational requirements are fully defined.

Aspect	Indication
No Aspect	Stop, Contact OCC.
Green	Straight movement – Normal direction
Flashing Green	Straight movement – Reverse direction
Yellow	Diverging movement – Normal direction
Flashing Yellow	Diverging movement – Reverse direction
Red	Stop
Flashing Red	Call-on - Contact OCC before proceeding

11.12.3 Switch Position Indicator Aspects

Aspect	Indication
No Aspect	Stop, Contact OCC.
Green	Switch aligned Normal movement
Flashing Green	Switch aligned for Normal Reverse movement

11.13 Automatic Highway Crossing Warning Systems

- Where signaling is provided, and where transit vehicle operating speeds and street traffic conditions dictate the need for warning systems, road crossings shall be equipped with Automatic Highway Crossing Warning (AHCW) systems. Crossing warning systems shall conform to the AREMA C&S Manual and the design and performance requirements of FRA Title 49, Part 234. Constant warning time approach circuits shall be utilized to provide a minimum of 20 seconds warning time. In general, the AHCW systems shall include the following, modified to site specific conditions:
- Gate mechanism operating voltage shall range from 10 to 16 Vdc.
- Fiberglass gate arms, including adapters with shear pins so that excessive side force against the gate arm shall cause the adapter's shear pins to shear allowing the arm to swing free and drop away, thus preventing major damage to the arm.
- Flashers utilizing LED technology.
- Vital solid state crossing controllers, including a means to adjust timer settings, which does not require modification to software.
- Off-quadrant flashers, as applicable.
- Cantilevers, as applicable.
- Steel gong bells which operate between 100 and 325 strokes per minute. In noise sensitive areas, adjustable soft tone bells shall be provided.
- Signage, as required by the MUTCD and traffic analyses.

Pedestrian crossing warning systems, if required, shall utilize the same equipment utilized at grade crossings, modified to site-specific conditions.

11.14 Interface Requirements

11.14.1 Street Traffic Signal System Interface

Where the LRT system operates at grade in non-signaled territory, with at-grade crossings of road traffic, transit vehicle movements shall be controlled by the street traffic signal system through the use of predictive priority, where agreed to by the local authority in the Inter-governmental Agreement. LRT bar signals will be controlled and operated by the street traffic signal controller, and provided in the street traffic signal system design. Inputs to street traffic controllers shall be provided by advanced street traffic detector loops and/or track circuit occupancy as applicable, sufficiently far in advance of a crossing to coordinate automobile and LRV movements.

Where the LRT system operates at grade in ABS territory where AHCW systems are utilized, transit vehicle movements may be controlled by wayside signals, however, street traffic signals shall be pre-empted to give transit vehicle movements full priority.

The Signal System designs shall be coordinated with the street traffic signal system design, including such elements as:

- Cable sizes, quantities, and termination requirements shall be defined for all road traffic controller interface terminations.
- The use of predictive loops and/or track circuits for street traffic and transit signal phasing activation, and release, shall be coordinated.

11.14.2 Vehicle Interface

The Signal System designs shall be coordinated with the design of the METRO LRV. All Signal System equipment designs, and placements shall consider the dynamic outline of the METRO LRV and shall provide a minimum of 6" clearance.

Doors of Signal System equipment cases or housings shall be restrained from opening to a position less than 6" clear of the METRO LRV dynamic outline.

No equipment shall be placed in such a manner as to obstruct a train operator's (or motorist's) view of any governing signal.

11.14.3 Trackwork Interface

The Signal System designs shall be coordinated with the trackwork design, including such elements as:

- Insulated joints in non-crossover locations, if required, shall be provided for track circuit boundaries, and shall be coordinated with other facilities-provided structures (e.g., station platforms) to ensure sufficient room for the installation of Signal System equipment.
- Insulated joints for track circuit boundaries within crossovers or other special trackwork configurations shall be identified to METRO and to the entity responsible for such special trackwork design in advance of the final design of the trackwork.
- Block-out requirements shall be defined for installation of signal equipment.
- Tie spacing in ballast track shall be coordinated for installation of impedance bonds, as required.
- Switch machine operating rod connections (bolt patterns) to switch points shall be coordinated and identified. Locations and sizes of block-outs shall be defined in embedded areas to accommodate installation of the machines.

11.14.4 Traction Power Subsystem Interface

The Signal System shall be coordinated with the traction power subsystem, including such elements as:

- The selection of track circuit frequencies and modulation schemes shall be coordinated with the vehicle traction power subsystem so as to preclude interference between the METRO LRVs, the Traction Power Subsystem and the Signal System equipment and operations.
- Impedance bonds shall be installed, as appropriate, at negative return, signal cut sections and cross bonding locations.
- Cross bonding shall be coordinated between the traction power final designers to assure that adequate cross bonds are provided for efficient traction power negative return without compromising track circuit integrity.

11.14.5 Communications Interface

The Signal System shall be coordinated with the communications subsystems, including such elements as:

- Joint use equipment housings.
- Communications protocols.
- SCADA input interface.

11.15 Track Circuits

Track circuits that are capable of operating in dc-electrified territory without interference from the vehicle propulsion system shall be utilized in signaled areas for vehicle detection. Track circuit types shall include:

- Audio-frequency track circuits of proven design
- Audio frequency overlays for crossing warning systems.
- Double-rail power frequency track circuits.

Impedance bonds, as required, shall be utilized at track circuit boundary locations to maintain continuity of the dc negative return system. Impedance bonds shall have a minimum rating of 1500 amps.

In signaled areas, the running rails shall be crossbonded through impedance bonds. Crossbond intervals shall be as determined by traction power simulations, however, no closer than every second track circuit. Negative return connections in signaled areas shall be connected to impedance bonds.

11.16 Power

The Signal System shall be powered by a 3 phase, 120/240 V ac feed from either the nearest passenger station or from a dedicated power drop from a local utility company. The local signal power system shall supply all local equipment required to operate the system, including:

- A 12 V dc power system for operation of Signal System logic, including grade crossings. Uninterruptible Power Supplies, utilizing floating nickel cadmium batteries, shall be provided for Signal System logic and grade crossings necessary to continue normal revenue operations for a period of eight hours.
- The power system for operation of powered switch machines shall be consistent with manufacturer's standard products and recommendations. The need for backup power will be determined on a case-by-case basis, as dictated by operational requirements. If required, backup power will provide for switch operation for a period of two hours.
- A 120 V ac power system for operation of all track circuits. Backup power will be provided to continue normal revenue operations for a period of eight hours, unless otherwise dictated by operational requirements.
- Ground detection shall be provided for the 12 V dc supply system, at a minimum. The need for an ac ground detection system shall be considered on a case-by-case basis, as dictated by maintenance requirements.

11.17 Houses

Signal System equipment shall be installed in houses, cases, or rooms in the general vicinity of crossovers. Houses shall:

- Be at minimum pre-fabricated, pre-wired, and sized to accommodate all equipment required to operate that part of the system for which it will be designed, including the necessary provisions for growth and expansion. Where aesthetics is a concern, concrete structures or other appropriate approved by METRO material may be used. Aesthetic enhancements to pre-fabricated structures may be provided in lieu of concrete structures as urban design guidelines dictate.
- Provide sufficient space for the installation of Communications System equipment, where applicable.
- Include heating and air conditioning for equipment protection.
- Be oriented logically from the maintenance and operations perspective.
- Include a local control panel to allow local control of switches (and signals in ABS territory) during emergencies and testing purposes.
- Include fire and intrusion detection systems.
- Have a minimum of three feet of clearance both in front of and behind all racks.
- Not have any racks mounted on hinges. Adequate front and rear clearance shall be provided by selection of proper location.
- Use shock mounting for racks mounted in rooms at locations where subjected to excessive vibration.

Rooms, where utilized, shall be equipped with stand alone, pre-wired 19-inch racks, and all associated location equipment.

11.18 Installation

All Signal System equipment shall be installed in conformance with all applicable parts of the AREMA C&S Manual of Recommended Practices.

Staged construction shall be as indicated on the integrated construction schedule.

11.19 Quality, Reliability and Maintainability

The Signal System shall conform to all applicable parts of the AREMA C&S Manual of Recommended Practices for Quality Assurance, Reliability Assurance and Maintainability Assurance.

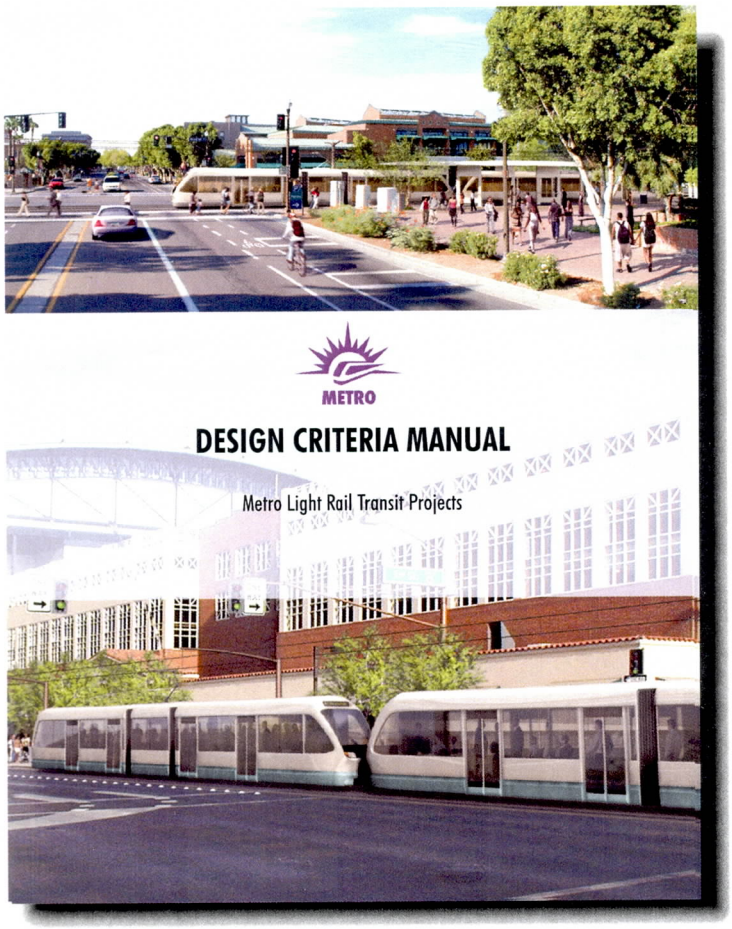

Chapter 12.0

Communications

12.0 COMMUNICATIONS

12.1 General

The purpose of this section is to establish the standards and design policies for the Communications System and associated subsystems, and their relationship to other system-wide elements of the METRO LRT Project.

The Communications System shall provide the necessary subsystems to support the total operational requirements of the METRO LRT Project. The following subsystems and/or functions shall be considered part of the Communications System and its design, including certain requirements related to expanding the subsystems as the system evolves:

- Radio
- Telephone
- Public Address (PA)
- Variable Message Boards (VMB)
- Closed Circuit Television (CCTV)
- Carrier Transmission System (CTS)
- Supervisory Control and Data Acquisition Subsystem (SCADA)
- Central Control System (CCS)
- Interface to Access Control and Intrusion Detection Subsystems and transmission of data from field sites to OCC
- Interface to Fire Detection and Suppression Monitoring systems and transmission of data from field sites to OCC
- Interface to the Fare Collection and Ticket Vending Equipment and transmission of data from field sites to OCC and/or Data Collection and Information System (DCIS).
- Central Control Consoles and Displays/Operations Control Center (OCC)

The Operation Control Center shall contain the necessary communications apparatus and the operating personnel for the overall safety and security of passengers and the daily operation of the trains, stations/stops, and all wayside apparatus. The Operations Control Center located at 302 N. First Avenue, is the focal point from which METRO LRT operations will be supervised, regulated and controlled. Section 7.2.1.1, Control and Supervision Considerations, includes additional operational requirements of the OCC. The Communications Systems identified herein are required for the full operating METRO LRT system.

LRT Communications Systems shall adhere to, conform, or otherwise comply with the most recent federal, state, and local laws and directives including, but not limited to organizations and references such as the Department of Homeland Security, Federal Communications Commission (FCC), Federal Transit Administration, National Intelligent Transportation Systems Architecture (ITS), National Fire Protection Association (NFPA), the Americans with Disabilities Act (ADA), National Electrical Code (NEC), National Electrical Safety Code (NESC), and Underwriters' Laboratories, Inc. (UL).

12.2 Communications Subsystems

12.2.1 Radio

Radio transmission shall provide the primary media for centralized voice and data communications with trains, voice communications between and amongst separate Agency functional organizations, and to provide communications in areas where it is impracticable to provide cable communications. The radio subsystem shall provide two-way communications for rail operations, maintenance operations, line supervisors, and transit police.

The voice infrastructure to be utilized may include use of any combination of the existing Local or Regional Radio Networks, existing or new remote radio repeater sites, dedicated VHF/UHF or any of 700/800/900 MHz band radio channels or any combination thereof, or any other licensed or unlicensed types of local wireless networks (carrier grade cellular, Wi-FI or WiMax) and linkages between the Control Center and the remote sites. Appropriate design consideration shall be given to new broadband wireless applications, particularly voice over IP (VoIP) technology. The radio system shall include multichannel psuedo-trunked voice and control data radio transmission channels, and shall provide full coverage throughout the existing and planned LRT operational areas as outlined above.

The Radio System shall provide User Groups within the trunked system for the following METRO LRT users:

- Line Operations
- Yard Operations
- Maintenance
- Supervisors
- Transit Police/Security
- Other dedicated groups of users (may be requested during the design phases).

The data radio system shall employ existing infrastructure provided as part of the METRO LRV Vehicle Management System (VMS) integrated with the SCADA train control function. New data radio infrastructure should be designed when upgrade of the existing network, appropriately defined during the PE design for the future extensions of the METRO LRT System, is deemed as not feasible. Upgrades to the data radio infrastructure can utilize existing local and/or regional broadband wireless data network (commercial or owned/control by municipal/state authority) or new design exclusively for the Regional Transit or only METRO LRT System use. Utilization and/or selection of the technology, frequencies and other components of such upgrade to the LRT System data radio infrastructure shall be defined during the PE phase for each future extension of the METRO. The radio data channel(s) shall be used for real-time monitoring health/performance status of the Light Rail Vehicles, real-time on-board video broadcasting and for wireless transmissions of data required to support VMS components on-board the trains. This information shall be periodically sent and recorded at the OCC. The information shall be accessible to OCC and LRV maintenance personnel. Data applications foreseen are:

1. Transmissions of the text messages between OCC and all in-service LRVs, including but not limited to the VMS real time vehicle health/performance status, alarms/indications text messages, passenger information text messages broadcasted to the single train or all trains in-service/fleet for real-time display on the on-board visual message signs, train operator sign-on/sign-off, automatic vehicle location and GPS data, real-time passenger boarding information and other on-board vehicle subsystem information that can be generated in a text message format and transmitted to a defined location within the network.

2. On-board real-time digital video broadcasting to OCC and specially defined emergency response sites in order to facilitate real-time monitoring of the safety and security on-board the train in-service or during the critical /emergency conditions.

3. Creation of on-board train Wireless Internet access points.

The radio system shall provide a required coverage of 95% of the service area, 98% of the time, including the areas along any new Right-of-Way (ROW), existing LRT alignments, and future extensions of the LRT (minimum 3 miles from each side of the CL of any track), for all at grade and above grade METRO facilities, underpasses, tunnel and depressed Right-of-Way (ROW) sections, in the OCC, at the passenger stations, for all operational and stored LRVs, in the Maintenance and Service Facilities, and to portable equipment throughout the defined service area. The field signal levels required to meet the coverage requirements, from all locations, shall be above the receiver's 12 dB SINAD sensitivity threshold, measured at the input to the receiver's RF port. A portable receiver shall be the basis for design.

The implementation of additional channels shall be contingent upon business need, light rail system expansion, budget allocation, and availability of frequency licenses (as a result of any frequency use and allocation changes mandated by the Federal Communications Commission [FCC]). Any new frequency allocations should be governed by the FCC rules in place at the time of the final design of the future METRO LRT System extension, as well as the aforementioned conditions.

Where the over the air signal is inadequate (tunnels, underpasses and depressed ROW sections), a slotted coaxial cable antenna or other repeater or base station equipment shall be used. The slotted coaxial cable shall be jacketed with a fire-retardant, halogen-free material. A distributed amplifier system shall be utilized as appropriate to minimize new base station requirements. FCC rules for intermodulation power and emissions from Tunnel portals shall be utilized. The most current FCC bandwidth rules in effect at contract award shall be followed.

When radio coverage is extended, METRO LRT Carrier Transmission System (CTS) is the preferred path to connect the central radio system audio to the base station/repeater, satellite receiver, or voting sites. If CTS channels are not available, an alternate path such as microwave or leased lines shall be employed in the design.

Radio equipment installed on trains, in supervisors and maintainers vehicles, as well as portable radios issued to staff shall be compatible with existing equipment. Radio dispatch consoles, compatible with existing equipment, shall be installed at designated control locations and integrated into the system controller.

12.2.2 Telephone

The METRO LRT System telephone service shall include maintenance and administrative telephones, and emergency communications devices or call boxes. Maintenance, and administrative telephones can be located on the station platform, park and ride areas, along the wayside, in the yard, and at the OCC. In addition to radio conversations, train control staff telephone conversations shall be recorded. An Electronic Automatic Private Branch Exchange (EPABX) will be located in MOE building at the M&SF facility. All LRT System telephones shall be served as subscribers of this EPABX. The EPABX equipment (local and remote) shall be capable of switching standard digital subscribers as well as Voice over IP (VoIP) based subscriber lines. Telephone instruments shall be capable of native IP operation or digital/analog sets compatible with appropriate IP conversion equipment.

Administrative telephones shall be installed in all office areas and locations accessible to operating personnel. These phones shall also be installed at the maintenance-of-way facilities and in the vehicle maintenance shop. Maintenance telephones shall be installed at strategic locations along the wayside where system equipment is located, such as at signal houses and traction power substations (TPSS).

Emergency callboxes (ECB) shall be installed on station platforms and at park and ride lots and shall be used to establish emergency communications with the Operations Control Center. ECB's shall be hands-free and shall not employ a handset. ECB's shall be activated by pushing a single button, shall not require a fare, and, upon activation, shall automatically dial a stored telephone number or operate in a direct private line automatic ringdown (PLAR) mode. OCC operators shall have the capability of determining the calling station location through display telephones and standard caller identification information. ECB locations shall be clearly marked with a constant blue-light beacon and shall incorporate emergency graphics on the exterior of the enclosure or housing. When the ECB is activated, the blue light shall strobe and produce an audible alarm to indicate that an emergency situation is occurring.

Telephones intended for public use by passengers, including ECB's, shall be fully compliant with federal, state, and local laws and guidelines such as the Americans with Disabilities Act (ADA).

12.2.3 Public Address

Public address (PA) messaging services shall be provided at passenger stations, in the yard and shop areas of maintenance and storage facilities, with access and control from various locations. The PA subsystem shall be used to provide routine announcements and emergency warning information. The generation of messages for announcement at selected locations shall be provided locally via preprogrammed, stored messages, remotely via transmission over TCP/IP LAN/WAN connection through the CTS, and via real time local terminal input.

The PA subsystem shall provide uniformly distributed audio, or sound pressure levels (SPL), throughout passenger stations, yard and shops, and OCC office areas. The PA speaker layout at any new station and conduit layouts at other stations shall be designed for a uniformly distributed minimum sound pressure level of 80 A-weighted decibels (dBA) at a height of 5 ft above the floor on passenger station platforms. On station platforms the coverage shall be uniform level over 90% of the open platform area. Station platform minimum levels shall be obtained when trains are not operating and when the ambient noise level is minimal. The SPL shall be automatically adjustable based on ambient noise to a maximum of 115 dBA. At locations with high background noise levels, speech processing shall be used to enhance the performance and intelligibility. Voice intelligibility shall meet or exceed the minimum standards set forth NFPA 72. Sound trespass to areas adjacent to stations shall be minimized to meet local ordinances or adjustable to levels approved by the authority having jurisdiction.

The audio inputs will be prioritized from OCC, fire management panels, pre-recorded devices, equipment rooms, and dial access from the telephone subsystem. The PA subsystem shall interface with the Variable Message Boards at all passenger stations such that messages and announcements are simultaneously delivered by both systems.

PA subsystem components and wiring shall be designed for redundancy, such that any single component failure will not completely disable message announcement at any location. The system shall include the capability of text-to-voice conversion and transmission for all ad-hoc messages to ensure clear, consistent audio delivery of messages created by different operators. The system should include provisions for messaging in English and Spanish and have the capacity to add up to 5 more languages, each with identical message storage capacity as the Spanish/English formats.

Each station PA design shall include a wireless microphone receiver to allow voice announcements to be made by roving staff during time-critical incident management situations. PA systems at maintenance and storage facilities and yard control offices will only be provided with local control and may be integrated with the telephone system. Any modifications, upgrades, or additions to the existing PA system shall be compatible with the head-end control and management system and protocols currently used.

12.2.4 Variable Message Boards

The Variable Message Boards (VMB) subsystem shall be provided at selected locations in passenger stations to provide, in compliance with ADA for the hearing impaired, operational and safety-related messages for patron awareness.

The generation of messages for display at selected locations shall be provided locally via preprogrammed format, remotely via transmission over TCP/IP LAN/WAN connection through the CTS, and via real time local terminal input. Where the VMB and PA systems are integrated, the displays shall be coordinated and simultaneous with the preprogrammed announcements being broadcast by the PA subsystem. Automated announcements shall include display of passenger information such as train destination, next train identification at terminal stations, and time of arrival of approaching trains. Where applicable, the VMB subsystem shall interface with the LRT Signaling System, Vehicle Management System (VMS), and/or the SCADA subsystem to activate the applicable passenger information message announcements at each respective station's VMB.

The Visual Message Boards shall be placed in locations to afford maximum achievable visibility from all parts of the station while complying with ergonomic and ADA guidelines. This includes quantities, height, and distance from platform ends as well as individual VMB character height, characters per line, viewing angle, pixel size, pitch, and color.

Any modifications, upgrades, or additions to the existing PA system shall be compatible with the head-end control and management system and protocols currently used.

12.2.5 Closed Circuit Television

The CCTV subsystem shall provide operational surveillance of designated passenger station, park-and-ride, and transit center areas as well as operational surveillance and security of METRO operations, yard, maintenance shop, storage facilities, and critical LRT approaches and/or segments.

Cameras shall be fixed view, trained to monitor entrances, fare vending equipment, emergency call-boxes, and platform waiting/boarding areas. Cameras shall also be deployed to monitor park-and-ride lots. Depending upon lot configuration, the cameras may be equipped with remote pan-tilt-zoom control from the OCC. Locations with multiple cameras shall include equipment to multiplex camera signals for transmission to the OCC over the CTS.

Video from cameras shall be transmitted and recorded at a minimum of 15 frames per second (fps), and at a resolution of at least 480 horizontal lines. The most efficient and/or latest available standard for video compression (minimum of MPEG-4) shall be employed to present and transmit video over the CTS.

The subsystem shall provide centralized monitoring and recording capability at the OCC. All video transmitted to operator workstations shall be recorded, indexed, and archived for a period of 30 days. Recorder video quality shall not be deteriorated or compromised as a result of recording. Video recorders shall be capable of recording comparable video resolutions to that being sent by the cameras and viewed at the monitors.

Transmission of video to OCC shall not affect SCADA network or revenue operations. In the event bandwidth requirements exceed the available bandwidth, the design shall be altered to either separate the networks so that there is no contention, or a Quality of Service (QOS) system is developed and deployed to ensure revenue operations are not affected.

The system shall be capable of performing or be upgradeable in order to perform software based active advanced surveillance and analysis of any video signal. Examples of such features include differential frame analysis to detect suspicious or unauthorized objects, motion detection, PTZ function automatic tracking, and facial recognition programs.

12.2.6 Carrier Transmission Subsystem

The Carrier Transmission Subsystem (CTS) shall be a communications network that provides the means of transmitting information from the remote locations to the OCC for processing and display and the means of transmitting information to remote locations to control equipment in the field.

The CTS main backbone shall be a network of fully redundant, self-healing rings transmitted over fiber optic media and shall be based on the Carrier Class Gigabit Ethernet (Gig-E) technology. The CTS network shall be based on Multi Protocol Label Switching (MPLS), connection-oriented technology. The fail-over time for the network shall be less than 50 ms. The CTS network planned for the LRT starter segment (CP/EV Project) will have 3 rings. The core ring encompasses the OCC, MSF and several stations nodes in between. The Ring #1 will include station to the west. Ring #2 will include stations to the east. The core ring speed will be 1Gbps and could be expendable up to 10Gbps. Rings #1 and #2 will provide speed up to 1Gbps. Core Ethernet Switches shall provide Layer 2 and Layer 3 capabilities for the CTS. The rings shall provide sufficient communications bandwidth to accommodate the initial operating segment, and all foreseen future expansion. The network shall be optimized to transport packetized voice, video, and data services. Backbone line rates shall be in-service upgradeable to provide additional bandwidth to the ring. Network Expansion shall be implemented by in-service addition of nodes to the ring as the LRT system expands.

Nodes shall be installed at selected locations, including in environmentally controlled cabinets at each passenger station, in order to provide physical interfaces to all field equipment. These interfaces shall include, at a minimum 10/100/1000 Base T Ethernet ports providing TCP/IP protocol connectivity and, optionally, TDM interfaces (such as T1) for analog voice or other low-speed data applications aggregated by a channel bank or other premise equipment.

Low speed (T1 or lower) interfaces shall employ 1:1 or 1:N protection switching, when available, on circuits determined operationally critical by METRO. CTS common control card equipment such as CPU's, switch matrices, timing reference cards, shelf controllers, power supplies and all other critical system resources shall be deployed with fully redundant active and standby modules.

A network management system shall provide means for centralized provisioning, monitoring, reporting, and managing of the CTS network. The local area network shall implement active security measures, through hardware, software, or a combination of both to protect against internal and external unauthorized entry, information theft, misuse, virus and worm threats, DDoS attacks, and other potential security breaches consistent with the most recent METRO information and network security policies.

Subnode equipment located along right-of-ways (such as TPSS and Signal facilities) and other LRT system locations shall be connected to nodes over fiber optic cable spokes, copper cable spokes, or a hybrid of fiber and copper cables using commercially available media and protocol conversion and transmission equipment. Both fiber and copper cables shall be designed to include a minimum of 50 percent spares for future use.

12.3 Supervisory Control and Data Acquisition

The Supervisory Control and Data Acquisition (SCADA) subsystem shall monitor, acquire, and transmit data and control inputs and outputs to a master central control system (described in section 12.4) at the OCC to monitor and control certain functional areas of the LRT system via PLC based remote data terminal units (RTU).

The SCADA subsystem shall transmit indications and alarms from remote sites to the OCC via the Carrier Transmission Subsystem. The SCADA subsystem shall provide supervisory control and indication of the following subsystems, functions, and locations:

- Traction power system alarm, indication, and control signals;
- Signal system alarm, indication, and control signals;
- Mechanical equipment and auxiliary power alarms and signals;
- Fire detection signals;
- Intrusion alarms for equipment rooms, cabinets, facilities, and fare collection equipment;
- Excessive Heat Detection (in wayside equipment shelters and substations);
- Communications equipment and electronic equipment alarms;
- Miscellaneous system status and alarms (fare collection alarms, etc.);
- Passenger station, park-and-ride, transit centers, as applicable; and
- Tunnel, overpass, and underpass facilities, as applicable.

12.4 Central Control System (CCS)

The CCS shall monitor, display, control, and report all operational subsystems within the LRT system from a centralized location (OCC). It shall be capable of status and location reporting, information storage and retrieval, event logging, alarm processing, incident and operations reporting for the following subsystems, at a minimum:

- Traction power subsystem
- Signaling subsystem, including train supervision and location reporting
- Communications subsystems, including PA/VMB
- Safety and Security subsystems, including fire and intrusion alarming
- Vehicle Management System (for Train location and Identification)

The system shall support a client – server architecture, with redundant components, power conditioning, and protection schemes necessary to maintain 24x7x365 day operations. System components shall be upgradeable and scale to accommodate future LRT extensions without major service disruption to the existing system. Large overview displays shall be modified or added, as needed, to accommodate additional line sections throughout expansion of the LRT system. Likewise, operator positions and workstations shall be added, as needed, to facilitate management and operation of additional line sections.

Passenger Assistance functions, including PA/VMB, shall be integrated applications within the CCS. The system shall allow seamless integration, patching, and local recording of all voice communications (telephone, radio, and paging).

VMS data shall be interpreted and integrated into the CCS to facilitate LRT vehicle reporting and geographical display. The SCADA subsystem (Section 12.3) shall supply the remaining input and output data required by the CCS for complete system management. Other systems, such as Access Control and CCTV, may be centrally controlled from the OCC, but not necessarily as an integral component or module of the CCS.

12.5 Access Control

The Access Control subsystem (ACS) shall provide centralized controlled access and personnel identification, monitoring, and alarming of designated doors, windows, portals, gates, and fences in the system to allow and detect authorized entry and prevent and alarm unauthorized intrusion.

12.5.1 Functional Requirements

Transmission of access control and intrusion detection indications and controls shall be via a Transmission Control Protocol/Internet Protocol (TCP/IP) based system. The access control system shall provide controlled access through doors via proximity type card reader terminals, alarming of unauthorized entry, and automatic recording of all detected ingress or egress. The OCC shall have centralized management, monitoring, and control capability of the access control system.

Centralized Control Units native to the access control system or Remote Terminal Unit components of the SCADA subsystem shall relay detection of entry into specific rooms for display at OCC. Authorized access to the specific rooms, cabinets, or other controlled access areas shall be authorized verbally via radio communications to the OCC or other authorized agent location, followed by card key entry.

Access and intrusion detection devices shall be attached to or embedded in the finished doors or door frames and shall provide a continuous indication of door movement of ½ in. and greater from the fully closed and latched position. The system may also be used to bar unauthorized access to controlled facilities if optional electromagnetic door latches are installed.

The ACS shall have sufficient capacity and expandability for 100% growth of all controlled facilities and key carded authorized personnel. The system shall be able to utilize existing METRO facility proximity key cards and must be compatible with existing METRO access control management and administration system software and hardware.

The ACS shall be capable of providing the following specific functions:

- Identification and verification of persons entering protected facilities
- Central and local Alert of valid entry
- Central and local Alarm of unauthorized entry
- Logging of entries and exits
- Vandal resistance
- Entry and exit readers
- Electromagnetic door latch option
- Ethernet network capability

Access control and intrusion detection devices shall be approved for all rooms, some of which are identified as follows:

12.5.2 MOW Facilities

- Traction Power Substation / Building / Shelters
- Auxiliary power room(s)
- Signal and Communication Rooms, Buildings, or Shelters
- Station and/or Transit Center Facilities
- Fare Collection Equipment
- Fare Collection Control and Accounting Room

12.5.3 Yard and Shop Facilities

- Communications Equipment Room
- Data Processing Room
- Yard Control Room

12.6 Fire Detection and Suppressions Monitoring

The fire detection and suppression monitoring system (FD&SM) shall consist of all necessary control panels, detector devised indicating devices and interface terminal points for the detection and annunciation of fires and monitoring of the fire suppression system at each LRT facility, as applicable.

The FD&SM system shall be configured to present the fire detection system fire alarms, fire alarm control panel and associated fire detector device status, fire suppression system equipment status, and suppression system alarms to the SCADA system.

12.6.1 Description

As a minimum, the fire detection system shall provide zoned alarms, local alarm annunciation, alarm contact closures, and necessary actuation's to the SCADA system for transmission and reporting at a centralized system control center (OCC),

12.6.2 Fire Detection

The intelligent fire detection system shall be capable of having multiple zone detection and cross-zone detection employed where fire suppression systems are furnished.

Smoke detection devices shall be of plug-in type configuration. The detection devices shall be plug-in interchangeable with other type detectors. Each smoke detector shall be equipped with an LED-indicating lamp to illuminate upon detector actuation.

Indicating devices shall be ADA compliant. Devices shall be installed per all applicable NFPA codes including Sections 12A, 72, 72-90 and 130, BDC latest editions, and per the local authority having jurisdiction (AHJ).

Heat detection devices shall be of plug-type configuration. Each heat detection device shall be a combination fixed temperature/rate-of-rise detector. Temperature rating shall be approved by the AHJ.

12.6.3 Suppression Monitoring

Suppression monitoring systems shall be capable of monitoring status and alarm conditions associated with fire suppression systems. Systems, as a minimum, shall be capable of monitoring status and alarm conditions for any type of suppression system (ie. standpipe, sprinkler, gas) employed at each site, Alarms and indications such as pipe flow valve status, valve position status, system activation, and system trouble shall be monitored, detected, and reported to the SCADA system for display at the OCC.

12.6.4 Power

The fire detection and suppression monitoring system shall be powered directly from their respective control cabinets. Power shall be furnished in accordance with applicable NFPA Codes.

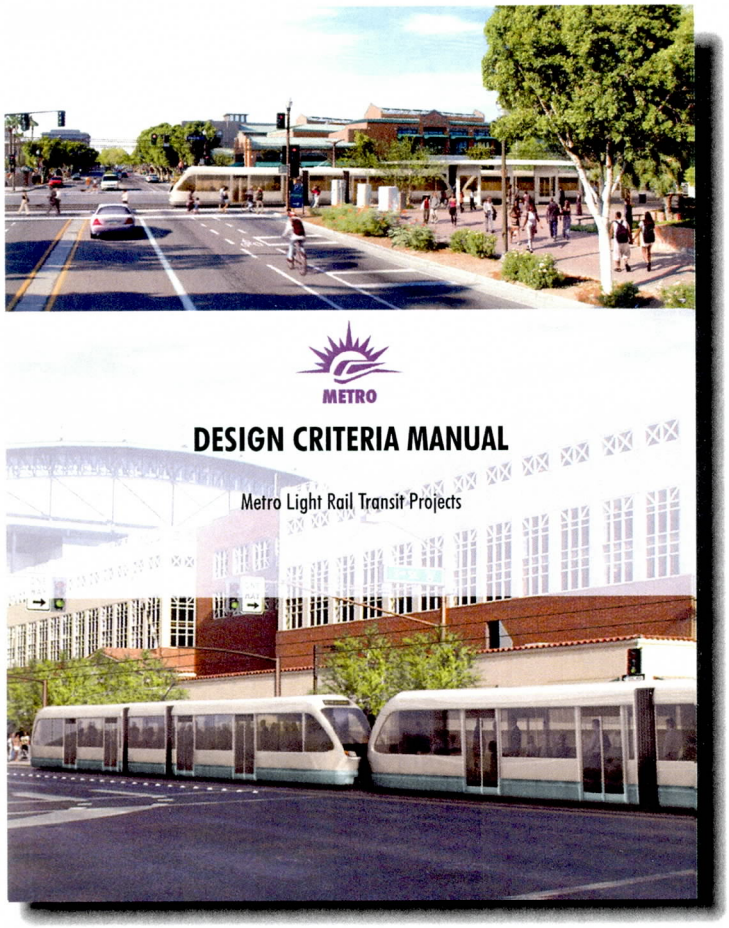

Chapter 13.0

Automated Fare Collection System

13.0 AUTOMATED FARE COLLECTION SYSTEM

The purpose of this chapter is to establish the design standards and design policies for the Automated Fare Collection system (AFCS) of the METRO Light Rail Transit System. It encompasses function-based design criteria related to fare collection. Fare collection methodology is a key determinant of the METRO LRT System design as the methods employed will have a direct impact on the system throughput.

A Proof-of-Payment (POP) fare collection system is the selected method of establishing revenue control over the METRO operating environment.

13.1 Design Objectives

The Automated Fare Collection System shall be designed in conformity with the prime objectives for the METRO systems elements. The safety of the passengers, employees, and the neighboring communities shall be the first priority in the design of the METRO systems elements. All other considerations shall be subordinate to the safety. Following safety, design of the METRO AFCS shall give priority to operational reliability, passenger convenience, and cost-effectiveness, in that order.

13.2 Design Approach

13.2.1 System Conformity

The fare policy shall conform to the regional fare structure employed by METRO. It shall employ existing fare instruments or their functional equivalent to the maximum practical extent in order to avoid burdening the existing network with new species of fare instruments. The fare control system shall be adaptable to deal with the transfer opportunities offered along the LRT alignment, including full compatibility with bus fare collection systems. The full range of current payment options will need to be sustained in the METRO fare policy and structure strategy without precluding consideration of other options.

13.2.2 LRT Fare Control

A Proof-of-Payment (POP) fare collection system is the current method of fare collection and fare media distribution. No fare collection takes place on vehicles. Under a POP system, fare-paid areas are defined as part of the system-operating environment within which all passengers must be able to demonstrate that they have paid a proper fare. Any passenger in a fare paid area who is unable to demonstrate proof of fare payment is subject to removal and/or fine.

Passengers are required to prepurchase fares from station-based Ticket Vending Machines (TVMs) or other sales outlets. TVMs require conduit and cable to support their power and have communications requirements for monitoring and reporting, credit/debit card authorization, settlement, and security systems. Either stand-alone validators or validators integrated into the TVM shall validate fare media at the time of use that is not originally marked with time sensitive information. At least two TVMs with complementary validators shall be provided for each station entry in order to maximize the availability of equipment, and to allow patrons a nearby alternative for a single machine mechanical failure, ticket stock depletion, or revenue overflow.

Additional TVMs, with validators, must be provided at high volume stations subject to significant peaking, as warranted by forecasted passenger demand.

Sports venues adjacent to the METRO stations will likely generate high ridership during special events. These stops and/or outlying park-and-ride or transit centers occasionally may encounter peaks in ticket sales that exceed the capacity of the TVMs required to accommodate regular passenger demand. Under such circumstances, manual ticket sales may be required for brief periods at these locations by transit employees. Ticket Office Machines (TOMs) are also included in the design criteria to accommodate such sales.

13.3 Design Criteria

13.3.1 Fare Structure and Ticket Media

The LRT fare structure shall be consistent and integrated with the regional fare polices and structures set by METRO for the local transit network. The current structure provides for multiple levels of cash fares based on service type and passenger characteristics, and includes a variety of ticket types. During the design, it shall be necessary to ensure that the fare systems employed by the METRO transit network are conformed.

TVMs shall be capable of issuing a variety of ticket types, and all shall be compatible with the existing regional fare collection system. TVMs shall be capable of accepting electronic "smart" fare cards and debit/credit payment media.

13.3.2 Fare Equipment Varieties

A single type of fare equipment such as TVM, Validator, and TOM shall be permitted for use within the LRT System in order to provide operational consistency, flexibility, and system maintenance simplicity. Multiple configurations of a basic equipment type may be permitted including combination of TVM and TOM with validation functions. TVMs should be designed based on location to vend a full range of fare media, with some to be cash only, credit/debit card only and/or smart card capable only, or any combination of the three.

13.3.3 Fare Equipment Locations

The preferred location for the fare collection area for a center platform is at the main station entry in the "free" area. Most stations with side platforms require an independent fare collection area for each platform. To minimize platform congestion at high volume stations, fare collection areas may be located off-street in Park-and-Ride areas. Fare collection equipment shall be situated so that pedestrian circulation is not impeded, and patrons can easily identify the location and access locations of TVMs. TVMs shall be placed in locations that afford operators maximum response time to platform movements, clear sight triangles, and unobstructed views of approaching station platforms. TVM locations shall not present a potential safety hazard with respect to patron interaction, patron security, or train operations.

TVM user interfaces, particularly passenger LCD displays, shall be oriented in such a way to avoid the affects of direct sunlight. TVM locations shall offer passenger protection from rain, direct sun, and other environmental elements through the use of cover, shelter, or other appropriate means of protection.

If on-site manual ticket sales are to be provided (e.g. at stations handling special event crowds), facilities must be in place to support TOMs (e.g. power, communications).

13.3.4 Fare Equipment Quantities

The minimum number of TVMs required at a fare collection area is based on two (2) cash fare transactions per minute per TVM, or two TVMs per fare collection area, whichever is greater. The maximum number of cash fares to be accommodated shall be estimated based on 55 percent of the maximum number of boarding passengers during the peak 15-minutes (P_{15}) using that fare collection area. The minimum number of stand-alone validators required, if used, is based on 25 percent of the TVMs, or two (2) validators per fare collection area, whichever is greater. If the validator function is integral to the TVM, then each TVM shall include this function.

Some station patron volumes may require additional vending equipment following initial start of revenue service to accommodate passenger loads anticipated during subsequent construction phases. Accommodations, such as conduit, junction boxes, pedestals, foundations, and future power and communications sources, for such growth should be included in the initial station designs.

13.3.5 Installation Requirements and Restrictions

TVMs and validators, if stand-alone, shall be installed by anchor bolts to the concrete of the station platform or on an off-platform pad. Equipment shall be leveled as necessary by the installer and a weather-tight seal placed between the equipment and the concrete.

Equipment shall be conveniently located on or off the platforms and oriented so that passengers in queue to purchase tickets shall not impede normal passenger flow between trains and the station and do not present a potential safety hazard, i.e. affect patron awareness of oncoming trains. TVM user interfaces, particularly passenger LCD displays, shall be oriented in such a way to avoid the affects of direct sunlight. TVM locations shall offer passenger protection from rain, direct sun, and other environmental elements through the use of cover, shelter, or other appropriate means of protection.

Any TVMs or validator installed side-by-side shall be at least 12 inches apart to facilitate maintenance of one machine while not interfering with passengers using the adjacent machine. Both machines shall conform to all applicable ADA front and side access requirements. Machines installed back-to-back may abut one another.

13.3.6 Conduits and Cabling

Separate conduits shall be required for power and data to all TVMs and validators. All conduits should be a minimum of one (1) inch diameter. Where initial and future equipment is planned for installation, water-tight junction boxes shall be embedded in the station platform, flush with the surface. Separate (or partitioned) junction boxes should be provided for power and data to comply with the National Electrical Code. These junction boxes should be adequately sized for all conductors, but no smaller than six (6) inches square, and should be installed abutting one another so that the equipment pedestal covers both boxes.

Power conduits can be arranged in any configuration that will meet the needs of the equipment. Where feasible, data cabling between the TVMs and the communications enclosure should be arranged in both "daisy-chain" and "star" configurations so that either a multi-drop network or a point-to-point network can be installed.

Data conduits should also be routed to any (presumably off-platform) area where Ticket Office Machines and/or future TVMs may be located.

Power and data cables shall be suitable for outdoor or wet conditions. Both fiber and copper cables shall be designed to include a minimum of 50 percent spare capacity for future use.

13.3.7 General Equipment Requirements

13.3.7.1 Design Life

All fare collection equipment shall be designed for a minimum service life of 15 years. All equipment shall operate seven days per week and 24 hours per day.

13.3.7.2 Codes and Standards

The fare collection equipment shall be designed to meet the latest revision of applicable codes such as the National Electrical Code (NEC), National Electrical Safety Code (NESC), and Underwriters' Laboratories, Inc. (UL), and the local codes of authorities having jurisdiction.

13.3.7.3 Americans with Disabilities Act (ADA) Requirements

The fare collection equipment shall comply with applicable requirements of the ADA. Fare equipment shall meet the rules in Title 49, Code of Federal Regulations, Part 37 resulting from the Americans with Disabilities Act. In particular, rules related to Automated Teller Machines (49CFR37, Appendix A, Section 4.34) and appended guidelines for Controls and Operating Mechanisms (Appendix Section A4.27) must be addressed in the fare collection equipment design. In addition, the TVM shall provide digitally recorded voice messages that "read" the contents of the patron display to assist visually impaired and illiterate patrons through the transaction process.

13.3.7.4 Climate and Environment

The fare collection equipment shall be installed in locations to avoid the affects of direct sunlight and offer passenger protection from rain, direct sun, and other harsh environmental elements. The fare collection equipment shall be capable of being operated at climate conditions stated in Chapter 1.4, stored, and maintained without impairment resulting from the natural or induced environmental conditions within which the equipment will be used.

13.3.7.5 Electrical Design Requirements

All electrical designs shall comply with UL Standard 751, "Vending Machines," NFPA 70, "National Electric Code," and applicable guidelines, codes, or standards of the authority having jurisdiction.

Fare collection equipment shall be powered by 120 VAC 60 Hz power, and shall tolerate ±10% fluctuations in voltage and frequency normally found in the commercial power grid. TVMs shall draw no more than 30 amps. Ticket Office Machines shall draw no more than 15 amps. Each TVM, TOM, and validator shall be connected to separate, individual circuit breakers feeding the station platform. A second independent power feed shall be provided to a convenience outlet inside the TVM enclosure for each TVM HVAC unit and any other associated internal equipment. Breaker sizing shall be consistent with equipment and wiring requirements.

Separate ground wires, tied to a common ground point, shall be provided for each piece of fare collection equipment.

Fare collection equipment shall be protected against transients and surges using circuit breakers and other protective circuitry.

All equipment shall be designed within FCC guidelines for emitted radiation, and shall be immune to electro-magnetic interference found in the wayside transit environments.

13.3.7.6 Transaction Speeds

TVMs shall have an average transaction time of thirty seconds, including all passenger interactions; measured from the time a passenger approaches the machine to completing the transaction.

Magnetic Ticket Processors shall average six seconds or less per transaction, including time for the patron to orient and insert the ticket for processing. Ticket processing shall occur in less than five seconds.

13.3.7.7 Modularity and Maintainability

All parts, components, modules, assemblies, and removable devices shall be interchangeable among machines without the need to make adjustment for proper compatibility. All replaceable devices shall combine mounting designed for simple removal/exchange and easy access to facilitate maintenance. All maintenance and service access to TVM components shall be through the front door of the TVM.

For ease of service, all electrical connections between and within components shall be established by means of plug-in connectors to allow rapid removal of a component and/or subassembly from the TVMs.

TVM software logic shall include a diagnostic capability that shall identify defective modules. Faults shall be self-diagnosing and reported by event with detailed error codes. Maintenance information shall be retained at the TVM and also sent to the Central Data System.

There shall be an interior cabinet light to aid maintenance and service personnel, which shall automatically illuminate each time the cabinet door is opened.

13.3.7.8 Reliability

TVMs and Magnetic Ticket Processors shall be of service-proven designs with acceptable performance in revenue service of at least three years. The equipment shall have a design life of a minimum of 15 years.

After 90 days of revenue service and when averaged over all in-service units for the previous 90 days, the fare collection equipment shall exhibit the following levels of reliability:

1) TVMs shall exhibit a failure rate of not more than one failure per machine per two months or no more than one failure per 10,000 cycles.
2) The Magnetic Ticket Processors shall have failure rates of no more than one failure per machine per four months or no more than one failure per 16,000 tickets processed.
3) Ticket Office Machines shall have failure rates of no more than one failure per machine per three months or no more than one failure per 12,000 vended tickets.

13.3.7.9 Safety

The Fare Collection System shall be free from hazards. The exterior surfaces of fare collection equipment, including all controls and appurtenances, shall have no sharp edges. The cabinet shall have no protrusions extending beyond its vertical surfaces that could be bumped by persons with a visual impairment or by a person passing by or using the TVM or MTP. All interior surfaces and components with which patrons and/or maintenance personnel could come in contact shall be free of sharp edges or other hazards.

All components shall be grounded and prevent electrical leakage or static charge. Electrical components shall have suitable warning graphics indicating the voltage present and other hazards.

13.3.7.10 Security

The design and installation of the fare collection equipment shall discourage and minimize the effects of vandalism and theft, prevent unauthorized access to the interior of the equipment, and prevent unauthorized removal of the equipment from its installed location.

The equipment designs shall also provide discrete levels of access to the interior of the equipment for maintenance personnel, revenue servicing personnel, and money processing personnel at a revenue-counting facility. Vault access by authorized personnel shall use controlled keying and high security locks that are mounted to prevent tampering and the unit shall provide the capability for maintenance smart card (or personal access card) access with PIN or access code validation. Access to the TVM for maintenance functions shall not provide access to the money vaults.

All exterior doors shall be locked with at least a three-point latching device with a bascule bolt and a hook locking bar, or approved equivalent.

The TVM shall detect intrusions and shall signal the Control Center via the SCADA system. In the event the door on the TVM should be opened without proper authorization, an audible alarm shall annunciate this condition locally at the machine and immediately send the alarm message to the Control Center and Central Data System. All events shall be logged for future reference.

The communications link integrity shall be automatically checked on a periodic basis to confirm that it is functional.

13.3.8 Handheld Verifier

13.3.8.1 Operational Requirements

The AFCS design shall include Handheld Verifiers (HHV) to allow fare inspectors to interrogate and verify validity of fare media, including magnetic fare and smart cards.

The HHV shall be a portable unit, similar in size and form factor to a PDA class device. It shall be powered by a rechargeable battery system. Ticket data and inspection transactions shall be capable of being stored, batched, and forwarded, via docking the unit in a compatible cradle, to a PC based data collection system. The design shall also include a portable printer, compatible with the HHV.

13.3.9 Ticket Vending Machine

13.3.9.1 Operation

Each TVM shall normally be ready to respond to a patron selection when it is in the idle condition. If the TVM is not ready, all operating functions shall be disabled. A programmable display screen and pushbuttons or, touch screen combining display and selection functions, shall be provided for patrons to complete a transaction. The display screen shall direct the patron through the steps of the transaction with the patron's inputs being entered through pushbuttons. Under normal operation conditions, issuing fare media may involve the following sequence of actions:

Step 1: Patron selects type of ticket desired by pressing one or a combination of two or more pushbuttons.

Step 2: TVM display screen shall display amount due and instructions.

Step 3a: For cash transactions, patron inserts coins and/or bills. Display screen shall decrement displayed amount due based on money collected by TVM.

Step 3b: For credit or debit card transactions, patron inserts or swipes card (then enters personal identification number [PIN] for debit cards), and follows other display screen instructions.

Step 4: When payment up to or in excess of correct fare value has been collected by TVM or authorization for the credit/debit card is received, the TVM shall issue selected ticket and change or receipt as necessary. Ticket and change shall be deposited in the ticket/coin return bin simultaneously.

Step 5: TVM shall return to idle condition.

13.3.9.2 Enclosure

To minimize the effects of vandalism and direct sun, the TVM enclosure is to be of unpainted stainless steel with a random-orbital brushed finish. The enclosure shall consist of:

- The main cabinet, which houses all devices and modules
- The front door, which provides secured access to the main cabinet
- The pedestal, which provides support and the means of leveling the TVM
- The light fixture, mounted atop of the main cabinet for illuminations of the front surface of the machine.

The TVM enclosure shall measure no more than 77 inches high, 29 inches deep, and 36 inches wide. The cabinet shall provide suitable resistance to vandalism and forced entry by utilizing rugged design, robust high-security locks and latches, blind hinges, and a minimum of pry points. TVM enclosures shall:

- Be free of sharp edges and burrs on all exterior surfaces including all controls and appurtenances
- Be built to resist damage to exterior cabinet and components due to abuse and vandalism and shall further protect all accessible components of the machine from unauthorized entry
- Not contain screws or hinges accessible from the exterior
- Ensure all metal parts that can be contacted by patrons are electrically grounded.

All power and communications wiring shall be routed from the station platform to the main cabinet through the pedestal. Maintenance access panels shall be provided in adequate quantities and locations on the enclosure to allow ease of maintenance to all internal system components as well as conduits, junction boxes, and cabling.

Equipment enclosures shall comply with International Electrotechnical Commission standard 529 (IEC529) to level IP34 or equivalent.

13.3.9.3 User Interface

The user interface, limited exclusively to the front door, shall utilize alpha-numeric displays, multiple buttons, clear instructions and graphics, an ample ticket/coin return cup, and easily recognized coin, bill, and card insertion slots.

13.3.9.4 Passenger Display

The passenger display shall be a high-contrast Liquid Crystal Display (LCD) unit with graphical display capabilities, a minimum resolution of 640 x 480 pixels, and the ability to display text in at least eight (8) rows of 20 characters each. Each character shall be readable at all typical viewing angles and in all ambient light conditions, including direct sun. The display shall utilize a backlight for improved readability in low ambient light conditions.

The passenger display shall be used to guide the passenger through the transaction with messages indicating the ticket type selected, amount due (decrementing as money is inserted), status messages (such as "No Bills Accepted"), and other steps needed to complete a transaction. Messages shall be normally displayed in English, but the messages shall alternate between English and Spanish as the English/Spanish button is depressed. (English shall be the default language displayed.)

13.3.9.5 Recorded Voice Instructions

The TVM shall provide, on demand of the patron, audible voice instructions. The voice system shall utilize digitally recorded and stored human speech, not computer synthesized speech.

The TVM shall contain a vandal resistant speaker mounted inside the TVM and its output shall be clearly audible from outside and in front of the TVM at all places within the viewing envelope.

The messages shall be stored in digital form and be modifiable by downloading new data files from the central computer. Messages shall be in English and Spanish. The message system shall have a total recording capacity of at least six minutes for each language or all possible transaction instructions, whichever is greater.

13.3.9.6 Instructional Graphics

Adjacent to each button shall be ADA-compliant raised letters and Braille describing the button's function, or in the case of the variably defined selection buttons, a numeric label. The text shall be in English and Spanish; Braille need be in English only. Each button's label shall be made of embossed stainless steel and be independently replaceable. All instructional graphics shall be vandal resistant and resist efforts at peeling and unauthorized removal.

Similar raised letter and Braille labels shall be in close proximity to the coin, bill, and credit/debit card insertion slots, and above the coin return/ticket cup. Additionally, pictographs and other instructional text shall be situated near the TVM controls to facilitate passengers' understanding of the machine.

13.3.9.7 Coin Return/Ticket Cup

All returned coins (rejected coins or change) and dispensed tickets shall be deposited in the coin return/ticket cup. A clear polycarbonate door that swings in with minimal pressure of the hand shall protect the cup. Even those passengers with large hands shall easily retrieve tickets and change. One or more drain holes shall direct any deposited liquids safely out of the machine.

13.3.9.8 Coin System

The coin system shall consist of four major components as described below. All coins in the system shall be stored in sturdy containers with high-security locks that are to be opened only in the cash counting facility.

13.3.9.8.1 Coin Acceptor

The coin acceptor shall process inserted coins, identify valid coins, and reject foreign coins and material. The acceptor shall be capable of identifying at least six different coins, and shall be initially programmed to accept US 5¢, 10¢, 25¢, and $1 coins (including both the Susan B. Anthony and the Sacagawea "Golden Dollar" coins). Valid coins shall be accepted at least 98% of the time upon initial insertion. The coin acceptor shall be capable of processing inserted coins at a rate of at least one coin per second. The coin validator shall be configurable to accept an Authority defined token.

A shutter that is opened only while the TVM is ready to accept coins shall protect the insert slot.

13.3.9.8.2 Coin Escrow and Recirculation Unit

Inserted and accepted coins shall be directed to an escrow area, capable of holding at least 50 coins, or directly to the coin recirculation unit. Upon cancellation of a transaction, the coin escrow shall return the identical coins deposited to the coin return/ticket cup.

When a transaction is successfully completed, deposited coins shall be stored in the recirculation units. At least one recirculation unit shall be provided for each accepted coin denomination; at least 70 coins of each denomination shall be stored in recirculation units. Coins in the recirculation units shall be the TVM's primary source of change. When a coin type's recirculation unit is full, excess coins shall be directed to the coin vault.

13.3.9.8.3 Coin Vault

Whenever a coin recirculation unit is full, excess deposited coins of that type shall be forwarded to a secure coin vault with a capacity of at least 300 cubic inches. The vault shall be designed so that once installed in a TVM, it cannot be reopened or reinstalled without first being emptied and reset in the cash counting facility. The coin system shall not function without a properly installed coin vault. The coin vault shall incorporate a means of automatically transmitting its serial number to the TVM. The TVM shall cease accepting coins when the coin vault is full however the TVM shall remain in service for bank note transactions.

13.3.9.8.4 Supplemental Coin Cassettes

The coin system shall include at least three (3) supplemental coin cassettes, each with a capacity of at least 1000 coins. The cassettes shall be secured in sturdy steel boxes and their contents shall be accessible only by personnel in the cash counting facility. When closed, the supplemental coin cassettes shall securely retain all coins during transport and normal handling. The cassettes shall dispense coins at a minimum rate of two (2) coins per second. The cassettes shall transmit a serial number to the TVM when properly installed.

When change is to be issued, the coin system shall attempt to dispense change in the least number of coins, utilizing first the coins in the recirculation units. If a coin type required to issue change in the minimum number of coins is not available from the recirculation unit but is available from a cassettes, the coin system shall utilize the cassette supply rather than issue change in more coins than necessary.

13.3.9.9 Exact Fare Only Mode

When insufficient coins are available in the recirculation units and cassettes to make the maximum possible change payout or the TVM is depleted of nickels, the TVM shall enter "Exact Fare Only" mode. However, while in this mode, the TVM shall continue to accept coins and issue change whenever possible.

13.3.9.10 Over Payment Mode

The TVM shall also be capable of accepting overpayment of a software configurable limit of up to one dollar in five-cent increments.

13.3.9.11 Bill System

The bill system shall consist of three major sub-components: bill acceptor, bill escrow, and bill vault. The bill acceptor shall be capable of recognizing one-dollar bills, two-dollar bills, and new and old 5, 10, 20, and 50-dollar bills. The TVM shall accept, validate, and retain only United States bank notes. Accepted bank notes shall be stacked and stored separate and apart from the coinage in a locked vault with a minimum capacity of 1,000 bills.

Bank notes shall be accepted in all four orientations. The bill validator shall reject foreign objects and all bank notes not in acceptable condition.

The bill system shall be removable and, when removed, the TVM shall remain in service for coin transactions.

The TVM shall contain a bill escrow unit that holds up to 15 bills consistent in operation with that of the coin escrow.

13.3.9.12 Ticket Printing and Encoding System

The ticket printing and encoding system shall be capable of issuing tickets that are compatible with the existing bus fare collection system. Using one or more printer/encoder modules, the TVM shall:

- Issue single-ride tickets with encoded transfer information on paper tickets.
- Issue magnetically encoded tickets and passes on plastic tickets.

13.3.9.13 Ticket Stocks

Each TVM shall accommodate a minimum of four (4) unique ticket stocks, including paper, paper-plastic compound (referred to as "triplex") magnetically encoded roll or fanfold. Ticket stock shall be in the form of rolls or stacks. Each roll or stack of tickets shall have a capacity of 1,200 tickets of standard credit-card size, using stock that is 0.007 to 0.01 inch thick. Single-ride tickets shall be issued on paper stock. Other magnetically encoded tickets shall be issued on plastic stock.

13.3.9.14 Ticket Printer/Encoder

The ticket printing and encoding system shall consist of one or more printers using direct thermal printing technology. For flexibility and enhanced security, the ticket printer(s) shall be capable of printing graphics, reverse printing (white characters on black background), landscape or portrait mode, multiple size characters, and a variety of fonts. Printing resolution shall be at least 200 dots per inch. Information shall comply with Title 49, Code of Federal Regulations Part 37

Information to be printed on tickets shall depend on the type of ticket being purchased and shall include date, time, ticket type, price, station name, destination or valid zones, TVM number, and sequence number.

The ticket printer/encoder(s) shall be capable of printing one ticket every three seconds or less.

Magnetic information to be encoded by the printer/encoder(s) shall be compatible with the existing bus fare collection system. Encoded information shall be verified by the encoder/printer(s) prior to the ticket being issued to the patron. Tickets that fail magnetic verification shall be erased and captured in an internal ticket reject bin.

13.3.9.15 Ticket Cutter

If ticket rolls are used, one or more self-sharpening cutters shall be employed by the ticket printer/encoder system to cut tickets from the stock. The cutter(s) shall be capable of cutting at least one million tickets before needing replacement or sharpening.

13.3.9.16 Receipt Printer

A separate receipt printer shall be provided to print audit tickets and other internally generated reports used by maintenance and revenue service personnel. Receipt stock shall be blank stock in roll form with capacity to issue at least 1,000 receipts per roll (receipt length at least 4 inches).

If credit/debit cards are accepted as payment, printed receipts, which shall indicate, at a minimum, transaction date, time, price, location, cardholder's name, last four digits of the account number, authorization number, TVM number, and ticket number, shall accompany the ticket. The receipt printer in the ticket/coin return cup shall deposit these receipts.

13.3.9.17 Credit/Debit Card System

The credit/debit card system shall consist of three subcomponents: the card reader, PIN pad, and display. Cards to be accepted shall be determined at the outset of Final Design, and shall include a combination of major national, regional, and local credit/debit cards.

An insert/remove card reader shall be employed such that cards are not "captured" or stored during the transaction. Transactions using these types of payment shall have a maximum time to complete of 30 seconds.

13.3.9.18 Electronic Control Unit

The electronic control unit (ECU) of the TVM shall be a solid-state device with suitable computing capability and memory for the task. The device shall be either an embedded microprocessor or an industrial grade PC, and shall be capable of tolerating the temperatures and other environmental conditions that the interior of the TVM will experience.

The ECU shall control all activities of the TVM. The ECU shall be equipped with a Central Processing Unit, Random Access Memory, Input and Output (I/O), Non-Volatile Memory, Real-Time Clock, removable Solid State Memory Module, and software capable of performing all control and data processing functions required for the TVM application.

The ECU shall record in its non-volatile memory and simultaneously in the removable solid-state memory module, information about the TVM's status, configuration, sales/accounting records, and other events. The TVM shall record each and every transaction. As a minimum the following data shall be recorded:

- Date
- Time
- Event code
- Employee code
- Totals for each ticket type selected
- Total transaction value
- Overpayments
- All Maintenance and Revenue access and the actions taken.
- Count by bill and coin type received for all vaults and hoppers.

13.3.9.19 Communications

The ECU shall communicate via a station Local Area Network with the central data computer system. Upon demand, the ECU shall transmit to the central computer requested information (such as daily sales totals) or receive and store downloaded information (such as new fare structures). As conditions warrant, the ECU shall initiate communications with the central computer (such as an alarm condition or maintenance alert).

Credit and debit card transactions, which require authorization from a financial clearinghouse, shall also cause the ECU to initiate communications, either directly to the financial clearinghouse or to the central computer system (which shall forward the authorization request to the clearing house). Chapter 12 – Communications, further discusses requirements for Fare Collection equipment and components.

13.3.9.20 Timing and Synchronization

The TVM shall be synchronized with a system master clock source, time server, or system timing appliance to maintain correct time-stamping and other synchronization functions with system equipment and components. Connection to the master clock source, presumably located at the OCC, shall be made via connection over the CTS and shall be capable of utilizing the standardized Simple Network Timing Protocol (SNTP).

13.3.9.21 Alarm System

The TVM shall have an integrated alarm system to monitor the security of the machine and its contents. This alarm system shall be independent of the TVM electronic control system and shall have a battery to support its operation for at least 24 hours in the event of commercial power failure.

The status of the outer door shall be monitored at all times by the alarm system. Impact and vibration sensors strategically positioned in the TVM cabinet shall detect attempts at intrusion and/or vandalism and shall cause the alarm to activate the siren and remote signaling. Physical security alarms such as those caused by intrusion, impact, or vibration events, as well as loss or degradation of TVM function, such as a TVM trouble or business function alarm, shall be summarized and forwarded for reporting to the OCC over the SCADA and/or CTS networks. During intrusions and other alarm conditions, a local siren shall sound for a programmable period, and if the electronic control unit is active, the alarm shall cause it to transmit the condition to the central data collection computer and monitoring systems, in addition to the independent reporting by the alarm system.

13.3.9.22 Power System

The TVM shall contain all necessary power supplies for the internal modules. An Uninterruptible Power Supply (UPS) shall also be provided to maintain TVM function in the event of power failures of three seconds or less, and to conclude any transaction in progress when power fails for more than three seconds. No transactions shall commence while commercial power is unavailable.

13.3.9.23 Maintenance Interface

A maintenance keyboard shall be provided inside the TVM. This keyboard, together with either a dedicated maintenance display or the passenger display (if usable with the outer door open), shall be used to diagnose the TVM, run tests, enter configuration data, print maintenance and audit receipts, and perform other maintenance tasks. Menus and other simple commands shall be extensively employed.

13.3.9.24 Revenue Servicing

Revenue servicing, which includes exchanging bill and coin vaults, exchanging coin cassettes, replenishing ticket and receipt stock, replenishing recirculating coin supplies, and so on, shall be easily accomplished and shall employ the maintenance interface only where necessary. Under normal conditions, revenue servicing shall require minimal interaction with the TVM's ECU and shall not require an extensive understanding of the TVM's operations.

13.3.10 Data Collection and Information System (DCIS)

The Data Collection and Information System (DCIS) shall be comprised of hardware and software components necessary to connect each TVM to a centralized control and management system. The DCIS shall provide:

- Real-time status and event monitoring
- Transaction record integrity when moving data from the TVM to storage computers
- Daily TVM polling to ensure transmittal of data as well as operational status from the TVM to the DCIS

- Data repository for all event and transactional data
- Control and configuration management of various TVM operating parameters from a remote location to allow new system files to be sent to the TVMs
- A vehicle to generate required system reports.

Fare equipment shall communicate over the most efficient communications medium (See Chapter 12) available to a server-class Fare Collection Network Controller (FCNC) and several LAN connected FCNC client workstations, located at the Operations Control Center (OCC) and designated workstation areas. The fare collection equipment shall automatically report status, events, alarms, and other information to the DCIS using a variety of administrator defined accounts and access controlled user levels (for example, finance, maintenance, revenue organizations) when necessary. All fare collection equipment shall also be able to receive information from the FCNC to update fare structures, ticket print layouts, patron display information, operating parameters, and to be remotely commanded to perform certain diagnostic exercises. If available, the equipment shall also report simple status conditions to a central control system, including security, maintenance, and revenue alarm.

DCIS hardware and software shall be designed and sized to accommodate:

- At least 300 TVMs
- Up to 10 TVMs at any single passenger station
- At least 100 passenger stations

The TVMs shall be networked together locally for information aggregation and transfer between the FCNC and each TVM installed. The FCNC shall receive all communications from TVMs via the Communications Transmission System (CTS) and any intermediate data conversion or network interface equipment. At a minimum, the following TVM originated information shall be transmitted to the FCNC:

1. Intrusion Alarm Data
    - Machine identification number
    - Event code triggered
    - Date and time

2. Transaction Data
    - Machine identification number
    - Date and time
    - Overpayment amount
    - Escrow amount
    - Card number
    - Ticket information
        i. Type
        ii. Value
        iii. Quantities

3. Event Data
    - Machine identification number
    - Date and time
    - Event code
    - Access information

4. Revenue Container Insertion and Removal
    - Data Machine identification number
    - Date and time
    - Revenue container identification
    - Employee ID

The DCIS data network (LAN/WAN) shall implement active security measures, through hardware, software, or a combination of both to protect against internal and external unauthorized entry, information theft, misuse, virus and worm threats, DDoS attacks, and other potential security breaches consistent with the most recent VMR information and network security policies. Specifically, any remote access connections to the DCIS shall be adequately protected via the implementation of these security measures.

All components of the DCIS shall be designed with redundancy such that any single component or system power failure does not prevent standard revenue operations and reporting.

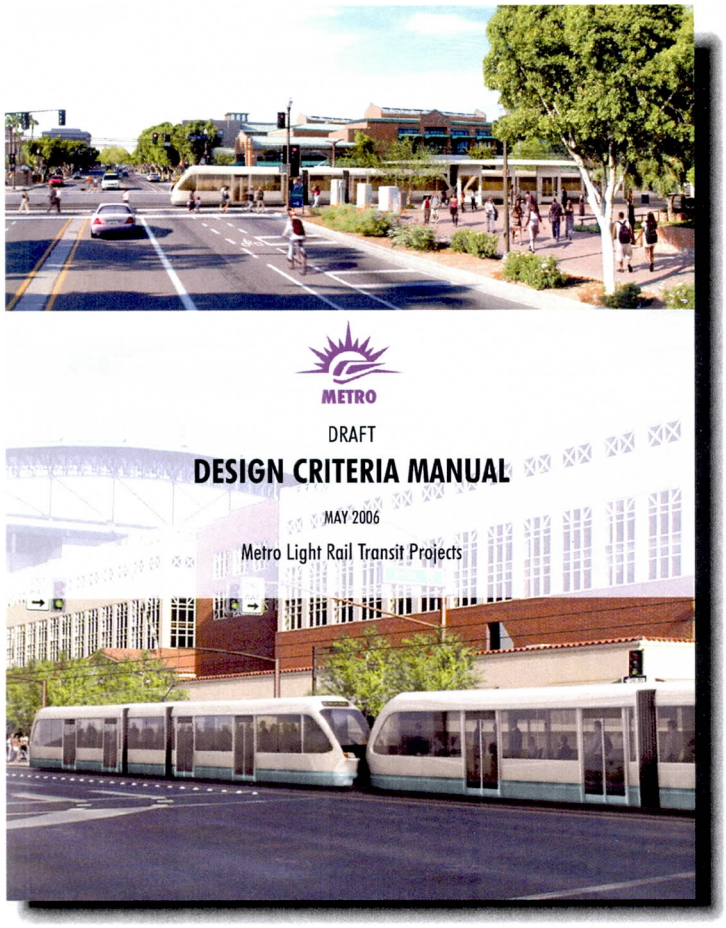

Chapter 14.0

Landscape

14.0 LANDSCAPE

The purpose of this chapter is to establish the standards and design policies for a functional and aesthetic landscape on the METRO LRT Project. Basic functional criteria are to provide shade, comfort, and a sense of scale to the LRT facilities, whether stations, trackways, or park and ride lots. Design criteria are established for such items as the appropriate use of plantings, train operator concerns, site distance requirements, pedestrian safety and comfort, and community context. This criteria to be used in conjunction with the Urban Design Guidelines and the Climate and Comfort Report.

14.1 Basic Goals

The landscape should respond to and achieve the following:

- Incorporate visual mitigation recommendations for the corridor and each visual assessment unit as described in the Environmental Impact Statement (EIS).
- Place trees and other plantings to maximize shading and screening opportunities and to provide a more comfortable climate for the rail passenger.
- Select plantings that shade, screen, and frame views where appropriate, in order to soften the visual impact of the corridor.
- Landscape plantings must meet local codes and state water use regulations.
- Coordinate with City representatives early in design phase to determine specific requirements.
- Ensure all potential government and non-government stakeholders are identified early and coordinated with throughout the project, such as parks and recreation, street transportation, community alliances or partnerships, etc.
- Use low maintenance, durable and drought tolerant plant species requiring minimum watering, pruning, feeding, and pest control with moderate growth habit.
- Landscaping design shall be in accordance with Crime Prevention through Environmental Design (CPTED) guidelines.
- Meet the intent of the CP/EV LRT Urban Design Guidelines of June 2001.
- A goal to replace existing plant material shall be applied where reasonable and where it is consistent with the overall design intent.
- Consider a design method to balance out the side of the ROW that is not being reconstructed and review with the City and METRO project manager.
- Determine responsibility for maintenance early in the design phase.
- Coordinate with adjacent line section design teams to ensure continuity and smooth transitions between line sections.

Landscaping design goals are further defined for the station and trackway, and the park-and-ride lots.

14.2 Station and Trackway Goals

The station and trackway environment is typically located in or adjacent to a major street. This environment includes vehicles, pedestrians, and substantial amounts of hard surfaces such as asphalt and concrete. In the summer a center platform or side platform station is a very inhospitable environment for people and plants alike.

14.2.1 Design Intent

- The trackway landscape offers an opportunity to create a strong linear element through the various landscape settings of the Corridor.
- The landscape should provide an attractive and unifying corridor.
- Design team shall establish the parkway width based on available ROW, surrounding conditions, intensity of use, and jurisdiction requirements. Coordination with appropriate jurisdiction early in design stage is critical.
- The landscape at or adjacent to the station should reinforce pedestrian circulation, help establish the visual identity of the station, protect and frame views, and enhance pedestrian safety and security.
- Enhanced landscaping at Stations will be applied 350 feet from the centerline of the station in each direction and will include the following:

    1) Increased sidewalk widths to accommodate heavy pedestrian use.

    2) More trees for shade and identification.

    3) Trees spaced no farther apart than 20 feet on center.

    4) These requirements will apply to each station even if existing curbs are not being disturbed.

    5) Start enhanced landscaping in logical locations, such as driveways or intersections.

- Design median landscaping to coordinate with the adjacent ROW and station landscaping. Avoid using equally spaced, aligned single-trunk trees or palm trees that would create a 'picket fence' appearance, or landscaping that will interfere with the train cars or overhead catenary lines.
- Determine early in the design phase if the City wants to upgrade any landscaping or hardscape that will be constructed by the contractor.

14.2.2 Pedestrian Shade

Shade shall be provided for the comfort of passengers that addresses the nature of our climate. Shade trees shall be used on the platforms due to their function as cooling mechanisms. Landscaping/shading should be oriented to shade pedestrians and vehicles during the hottest part of the day. Minimum 36-inch box trees should be provided for the platforms, 24-inch box trees elsewhere. Minimum height, width and caliper for the trees shall be as specified in the American Nursery Association Recommended Average Tree Specifications for the size and species of tree specified. The required box size and tree caliper shall be specified on the plans.

14.2.3 Plant Longevity

- Choice of tree species should be balanced with maintenance requirements.
- Efforts should be made to ensure long-term plant health through proper irrigation and aeration of soil. Provide a minimum of 48 square feet of exposed soil per tree.
- Provide an automatic irrigation system to all plant material. Coordinate irrigation products and the location for irrigation controllers with each City during the design phase.
- Determine if the existing irrigation system is suitable to add new irrigation facilities or if it must be totally replaced. Many areas have a mix of private and municipal systems within the ROW.
- Employ techniques to prevent the accumulation of grass, leaves, and other errant plant material on the track.

14.2.4 Pedestrian Safety or Security

- The landscape should not detract from pedestrian safety and security (CPTED).
- Prune trees as they grow to eventually achieve a 7-foot clearance above walkways and parking stalls, and to maintain sight visibility distances required by the City. Tree canopies shall not be lower then seven feet from the finish floor or sidewalk elevation, except in non-pedestrian areas.
- Vegetation should help to screen vehicles from adjacent uses while allowing for surveillance.
- If the sidewalk width must be less than the City standard width, place trees in tree grates to extend the effective width of the walking area. Coordinate with the City to determine if other opportunities exist to widen the sidewalk.
- Cast iron tree grates when utilized shall have 48 square foot minimum exposed soil area to cover. Tree grates shall be designed to support the weight of one wheel of a service vehicle and be ADA compliant.

14.2.5 Structural Soil

- Structural soil shall be used as considered appropriate based on the experience of the design team and City staff.

- Review details and specifications for using structural soil with the City staff prior to incorporating in the project to determine where or if it should be used.

14.3 Park-and-Ride Lots

Park and ride lots are typically large expanses of asphalt of varying size depending on their location and place in the rail system. The landscape of these parking lots provides an opportunity to reinforce pedestrian connections to rail facilities while creating a more moderate climate.

14.3.1 Design Intent

- Landscaping should provide year-round aesthetic interest.
- The facility landscape should provide orientation to the transit passenger.
- Plantings should reinforce pedestrian circulation and access to transit facilities.
- Coordinate with Cities on locations of Park and Ride lots to determine if joint development is a potential.
- Main requirement is to provide shade for pedestrians.
- Comply with City requirements for all lighting, retention, and landscaping. Minimum landscape requirements are governed by the Development Codes of the City in which the park and ride site is developed.
- All work outside ROW shall be processed through the Cities development review process.
- Retain all on-site water on site. Review each Cities standards for specific requirements.
- Maintain proper site visibility requirements per each Cities requirement.
- Provide landscaping around security structures. Insure trees will not block view from security cameras.
- If shade structures are proposed for cars, funding will need to be separate from the FTA funding.

14.3.2 Parking Lots

- The asphalt should be shaded to reduce the heat island effect.
- Trees should be placed in islands with sufficient frequency so as to provide shade for 50 percent of the parking spaces or meet local landscape standards, whichever provides the greater shade area.
- A minimum of 60 square feet of contiguous open soil area should be provided for each tree to ensure their long-term health.

- Vegetation should help to screen vehicles from adjacent uses while allowing for surveillance.

14.3.3 Pedestrian Shade

- Shade should be provided over pedestrian walkways and within the parking areas to shade patrons of the system.
- Direct, shaded pedestrian connections should be provided to transit destinations.
- Use of multi-trunk trees should be encouraged in parking areas to reduce the tendency for blowdown; however, placement of multi-trunk trees needs to consider potential branch interference with pedestrians or vehicles
- The station access walkway area should be shaded, either by architectural or vegetative shade.

14.3.4 Wayfinding

- Vegetation should be used to help direct pedestrian traffic to the platform.
- Vertical elements such as trees and palms should used to orient patrons to destinations within the facility.
- Use of color and accent plantings should be used to help way finding.

14.4 Hardscape

- Sidewalk widths and locations shall be addressed in the early planning stage to determine the affects on ROW, sidewalk locations, plant types that can be used, etc.
- Coordinate with each City to determine whether to match the existing hardscape or replace with a different material. The hardscape design shall be based on several factors, including the historical nature and condition of the existing hardscape, and the goal to create a unifying and safe streetscape.
- Preferred sidewalk width is 8 feet unless otherwise required by the local jurisdiction. Coordinate with each jurisdiction to determine their specific design standards, sidewalk and parkway widths, and tree grate requirements.
- Enhanced Landscaping at Stations: Sidewalk widths and landscaping requirements shall comply with the current applicable minimum standards for the City in which they are constructed. Specific requirements include:
    1) Phoenix: 8-foot wide sidewalk with a 6-foot wide landscape strip between the curb and the sidewalk.
    2) Tempe: 14-foot wide sidewalk with 6-foot tree grates.
- Replace artistic sidewalks in kind.
- Coordinate with adjacent private developers to provide consistent hardscaping and to avoid replacing new or proposed hardscaping.

- All hardscaping shall be in conformance with the Americans with Disabilities Act Accessibility Guidelines (ADAAG).

14.5 Grading and Slopes

- Limit side slopes adjacent to sidewalks to the maximum allowed by City requirements.
- Slopes with aggregate mulch shall be no greater than 3:1.
- Turf areas shall not exceed 5:1.

14.6 Plant Material

Plant selection should consider the following:

- design intent
- mature height and spread
- growth rate
- seasonal form and color
- hardiness
- sun/shade preference
- bloom cycle and seed/fruit production
- soil and drainage conditions
- tolerance to pollutants, wind and abuse
- availability and contract growing options
- maintenance characteristics
- initial cost
- minimal plant droppings

Plantings shall include indigenous and native species, suited to the Sonoran Desert and specific site conditions.

Mature, healthy existing plant material shall be preserved or salvaged where possible. All existing trees on a site should be indicated on the contract documents. Appropriate protection in place during construction shall be specified.

- Coordinate with City to determine requirements and extent of soil testing needed.
- Coordinate with private developers so that the landscaping is compatible to the extent possible.

- Minimum size for trees shall be 24-inch box (except on platforms), equivalent caliper, height, and width for the species as noted in the ANA Tree Specifications, current edition.
- The longitudinal spacing of trees shall be adjusted to accommodate existing subsurface conditions such as utilities and vaults, and special conditions such as existing or proposed poles, walkway canopies, awnings and shelters.
- Avoid interference with OCS poles, trains and overhead centenary lines.
- Where applicable, new street trees at stations shall relate to existing landscaping.
- Medium to large shrubs shall be avoided. Groundcovers and small shrubs less than 3 feet in height are preferred.
- Use plant materials that meet the sight visibility requirements required by the City.
- Vegetation shall not obscure visibility of either pedestrians or vehicles. Trees and groundcovers are preferred in heavily trafficked pedestrian areas.
- Vines shall be used selectively to landscape vertical surfaces such as screen walls. Approved vines shall be as listed in Chapter 6, Station Design Criteria of this document.
- No thorny plants are to be planted in ROW or near pedestrians.
- Utilize hybrid or cultivar trees if possible to help achieve consistent tree characteristics.
- Existing plant material shall be inventoried during the design phase to compare to the new design. The new design should try to balance plant material that is removed.

14.7 Codes and Standards

All local codes shall be followed or exceeded to ensure acceptance of landscape plans during jurisdictional design review. In addition, the following standards and guidelines shall be referenced:

- American Standard for Nursery Stock ANSI Z60.1;
- Arizona Nursery Association (ANA) Recommended Average Tree Size Specifications;
- Standard Plant Names, American Joint Committee on Horticultural Nomenclature
- Arizona Department of Water Resources (ADWR) Drought Tolerant / Low Water Plant List
- Applicable City Zoning Ordinance and building code requirements, including MAG Standard Specifications and Supplements.
- Americans with Disabilities Act Accessibility Guidelines (ADAAG)
- Utility company requirements

Chapter 15.0

Facilities Electrical

15.0 FACILITIES ELECTRICAL

15.1 Introduction

15.1.1 General

The purpose of this chapter is to establish the standards and design policies for the facilities electrical engineering on the METRO LRT Project.

To the greatest extent possible, and consistent with achieving cost effectiveness and practicality of construction, the design shall:

- Provide for safe, reliable, economic and continuous operation of the electrical system
- Promote uniformity and standardization in both design and equipment
- Facilitate the installation and maintenance of the electrical system
- Provide reasonably cost-effective spare capacity for future use as defined herein.
- Lighting to meet Crime Prevention through Environmental Design (CPTED) guidelines

15.1.2 Scope

These criteria apply to the design of all electrical power systems, lighting systems and associated controls for fixed facilities such as:

- At-grade passenger stations
- At-grade passenger station at existing facilities
- Operations Center
- The Main Yard and Shop facilities
- Other ancillary facilities
- At-grade segments
- Pedestrian crosswalks
- Parking or storage areas

Included are requirements for spares and for connections to equipment.

These criteria shall be coordinated with the Traction Power, Signaling, and Communications Chapters. Any criteria not covered in those Chapters should be referred to Chapter 15 Facilities Electrical.

This criteria shall not apply to vendor-provided, prefabricated structures where these structures are furnished as part of a system specified under other sections of this document, such as packaged traction power substation buildings and communications/signaling buildings or housings.

15.1.3 Codes, Regulations and Standards

Electrical systems shall conform to the requirements of the codes (including ordinances), regulations (including general rules and safety orders), and standards listed herein.

Where the requirements stipulated in this document or any referenced source are in conflict, the stricter requirement shall govern.

Unless specifically noted otherwise herein, the latest edition of the code, regulation, and standard that is applicable at the time the design is initiated shall be used. If a new edition or amendment to a code, regulation or standard is issued before the design is completed, the design shall conform to the new requirement(s) to the extent practical or required by the standard governmental authority enforcing the code, regulation or standard changed.

15.1.4 Local Codes and Regulations

Local codes and regulations and their amendments shall apply to all the work within the jurisdiction. The designer shall ascertain the jurisdiction(s) applicable to the work.

15.1.5 National Codes and Standards

The codes, standards, and regulations (latest edition) of the following national organizations shall be used, as applicable, in conjunction with the requirements of the local codes, standards, and regulations. The work shall be in compliance with, but not limited to, the associated publications included below:

American Institute of Steel Construction (AISC)

American Iron and Steel Institute (AISI)

American National Standards Institute (ANSI)

- C2 National Electrical Safety Code (NESC)
- C84.1 Voltage Ratings for Electric Power Systems and Equipment (60 Hz)

American Society of Mechanical Engineers (ASME)

American Society for Testing and Materials (ASTM)

American Welding Society (AWS)

Certified Ballast Manufacturers (CBM)

Factory Mutual (FM)

Insulated Cable Engineers Association (ICEA)

International Electrotechnical Commission (IEC)

Institute of Electrical and Electronics Engineers (IEEE)

Illuminating Engineering Society (IES)

National Association of Corrosion Engineers (NACE)

National Electrical Contractors Association

Standard of Installation

National Electrical Manufacturers Association

National Fire Protection Association (NFPA)

- 70 National Electrical Code (NEC)
- 72A Installation, Maintenance, and Uses of Local Protective Signaling Systems for Guard's Tour, Fire Alarm, and Supervisory Service
- 72C Installation, Maintenance, and Uses of Remote Station Protective Signaling Systems
- 72E Automatic Fire Detectors
- 72F Installation, Maintenance, and Use of Emergency Voice/Alarm Communication Systems
- 78 Lightning Protection Code
- 101 Codes for Safety from Fire in Buildings and Structures
- 110 Emergency and Standby Power Systems
- Standard on Fire Protection in Planned Building Groups

Occupational Safety and Health Administration Act (OSHA)

Uniform Building Code (UBC)

Underwriters Laboratories (UL)

15.1.6 Interpretation

A. Interpretation of requirements by local codes, standards, and regulations shall be those issued by the authority having jurisdiction.

B. Interpretation of national codes, standards, and regulations shall be those made by the issuing organizations. In particular, the following handbooks shall be used in conjunction with their codes:
   - The National Electrical Code Handbook (issued by NFPA)
   - National Electrical Safety Code Handbook (published by the IEEE).

15.1.7 Design Guidelines

The design shall conform, whenever practical and applicable, with the recommendations given in the following publications:

Institute of Electrical and Electronics Engineers (IEEE)

- 141 Recommended Practice for Electric Power Distribution for Industrial Plants
- 142 Recommended Practice for Grounding of Industrial and Commercial Power Systems
- 241 Recommended Practice for Electric Power Systems in Commercial Buildings
- 446 (ANSI) Recommended Practice for Emergency and Standby Power for Industrial and Commercial Applications

- 493 Recommended Practice for the Design of Reliable Industrial and Commercial Power Systems

American National Standards Institute (ANSI)/Illuminating Engineering Society (IES)

- RP-1 American National Standard Practice for Office Lighting
- RP-7 American National Standard Practice for Industrial Lighting
- RP-8 American National Standard Practice for Roadway Lighting

National Bureau of Standards (NBS)

- FIPS PUB 94 Guide on Electrical Power for ADP Installations

Standard Handbook for Engineers, Fink and Carroll Eds, McGraw Hill Book Company

15.1.8 Definitions

- Definitions for lighting terms and abbreviations used herein are contained in the IES Lighting Handbook, Reference Volume, and in the ANSI/IES series, "RP" publications listed under Subsection 23.1.4.5 B.
- Definitions for power distribution terms and abbreviations used herein are contained in the various standards listed in Subsection 23.1.4.5 A, or in the IEEE Standard Dictionary of Electrical and Electronics Terms (IEEE 100).
- Acronyms

AISC	American Institute of Steel Construction
AISI	American Iron and Steel Institute
ANSI	American National Standards Institute
ASME	American Society of Mechanical Engineers
ASTM	American Society for Testing and Materials
AWS	American Welding Society
CCTV	Closed Circuit Television
CBM	Certified Ballast Manufacturers (Association)
FM	Factory Mutual
HVAC	Heating, Ventilation, and Air Conditioning
ICEA Association	Insulated Cable Engineers
IEC	International Electrotechnical Commission
IEEE	Institute of Electrical and Electronics Engineers
IES	Illuminating Engineering Society
NACE	National Association of Corrosion Engineers
NBS	National Bureau of Standards
NECA	National Electrical Contractors Association
NEMA	National Electrical Manufacturers Association
NFPA	National Fire Protection Association
OSHA	Occupational Safety and Health Administration Act
UBC	Uniform Building Code
UL	Underwriters Laboratories, Inc.

15.1.9 Environmental Considerations

Electrical systems and components shall be compatible with the environment (See Section 1.4) in which they are intended to operate. Suitable components and enclosures shall be selected to allow the equipment or systems to operate without significant loss of design life.

15.1.10 Selection of Materials and Equipment

A. Material shall be UL listed, IEEE, NEMA or industrial heavy-duty meter whenever the listing is available.

B. Material and equipment specified for use shall have approval for use by METRO when no UL listing is available.

C. Whenever practical, items specified shall be available from three or more manufacturers. Catalogued (off the shelf) items are preferable over customized items.

D. Fire pump controllers shall be FM approved.

15.2 Distribution System

15.2.1 General

A. The electrical power distribution system shall be designed to be flexible, capable of accommodating future additional loads, and easily and economically maintained. Initial costs shall be considered along with life cycle costs.

B. The electrical distribution system shall be fully coordinated. Fault current calculations shall be based on expected short circuit levels, taking into account feeder impedance.

C. Where practical and economical:

- Locate the distribution and transformation equipment near the center of load.
- Supply 120/208-Vac panelboards by local step-down transformers.
- Take full advantage of intermittent operation and any applicable load diversity factors in rating feeders and equipment.

D. Minimum sizes of equipment, and electrical devices, are indicated but it is not intended to show every offset and fitting, nor every structural or mechanical difficulty that will be encountered during the installation of the work.

E. The Contractor shall furnish and install the parts and pieces necessary to the installation of equipment, in accordance with the best practice of the trade, and in conformance with the requirements of the plans and equipment manufacturer's recommendations.

F. Electrical equipment shall be capable of operating successfully at full-rated load, without failure, at an ambient air temperature of 60 degrees C, and specifically rated for the altitude indicated on the Plans. Electrical equipment not rated for operation at that temperature shall be provided with air conditioning to meet the manufacturers' operating temperature.

G. Items not specifically mentioned in these Contract Documents, or noted on the Plans, or indicated on reviewed shop drawings, but which are necessary to make a complete working installation, shall be deemed to be included herein.

H. The Contractor shall perform necessary saw cutting, core drilling, excavating, removal, shoring, backfilling, and other work required for the proper installation of conduits, whether inside, or outside of the buildings and structures. The Contractor shall repair and patch where demolition has taken place in a manner to match existing original structure.

I. Materials, equipment, and parts comprising any unit, or part thereof, specified or indicated on the Plans, shall be new and unused, of current manufacture, and of highest grade consistent with the state of the art. Damaged materials, equipment, and parts, are not considered to be new and unused, and will not be accepted.

J. The fabricator of major components, such as distribution panelboards, switchgear, and motor control centers, shall also be the manufacturer of the major devices therein.

K. Where indicated elsewhere in these specifications, or on the Plans, the Contractor shall furnish and install nameplates, which shall be black laminate with white letters. The nameplates shall be fastened to the various devices with round head stainless steel screws. Each disconnect means for service, feeder, branch, or equipment conductors, shall have nameplates indicating its purpose.

L. Service Entrance equipment, Switchgear, Switchboards, Panelboards, Control and Distribution Panels, and other factory assembled electrical enclosures shall bear a UL label. Custom built electrical enclosures and control panels shall bear a UL508 label.

M. The Contractor shall be responsible for contacting and coordinating the electrical utility work with the electrical utility company. The Contractor shall be responsible for furnishing and installing equipment and material required to bring electrical power service to the service location in conformance with the electrical utility requirements. The Contractor may have to provide the following for the electrical utility company's primary (from utility power line to the utility transformer) and secondary (from utility transformer to the service) electrical lines in accordance with the electrical utility company's specifications and requirements:

- Conduits (verify quantity and sizes)
- Trenching, backfill, and compacting (verify trench size(s), backfill material, and compaction percentage requirements)
- Concrete pad(s) (for pad mounted transformer(s))
- Cable protection along the vertical drop at the utility company's pole (if pole mounted transformer(s))
- Other items required by the power utility company

The Contractor shall also submit copies of service entrance shop Drawings to the utility, per utility submittal requirements, prior to submittal to the Engineer. The Contractor shall obtain written approval from the power utility company that the service entrance equipment is acceptable prior to release the order to the supplier for fabrication. A copy of the approval letter from the utility shall be transmitted to the Engineer along with the submittal.

N. The Contractor shall furnish, install, and maintain, temporary power and lighting systems needed for construction. This temporary system shall include weatherproof panel(s) for the Contractor's main breakers and distribution system. Ground fault interrupting equipment shall be installed. Connections shall be watertight, with wiring done with Type SO portable cable.

After construction is completed, the Contractor shall remove temporary power equipment and devices.

O. The data and curves for a short circuit analysis and coordination study shall be performed by the Contractor and submitted for review and approval. The study shall include all protective devices from the utility service to and including the secondary devices of medium voltage transformers and primary feeders to motors, motor control centers, loads 50 kVA and larger, and devices rated at 100 ampere and larger.

P. Single line diagrams, as indicated on the Drawings, show circuit voltages, circuit protection rating, and other pertinent data. Where conflicts exist on the Drawings, the single line diagrams shall take precedence. Grounding conductors are not necessarily indicated. See grounding requirements specified elsewhere herein.

Q. Work indicated on the Plans is approximately to scale. Actual dimensions and detailed Plans should be followed as closely as field conditions permit. Field verification of scaled dimensions on Plans is governed by field conditions. Installation of systems and equipment is subject to clarifications as indicated in reviewed shop drawings and field coordination.

15.2.2 Classification of Electrical Loads

A. Essential loads are those required to be in operation during a disruption in the normal power supply to the facility. These include:

- Fire alarm and public address systems
- Emergency communications systems
- HVAC and other mechanical equipment (and their controls) necessary for control of smoke and fire.
- Equipment required for security surveillance (CCTV cameras) or where otherwise identified as necessary by security considerations.

B. Minimal lighting levels as required under part A and nonessential loads are all loads other than those defined above under part A, and include:

- Lights or signs not required for emergency
- Equipment or subsystems not required for evacuation or security surveillance.

15.2.3 Reliability and Load Transfer Requirements

A. The Vehicle Repair Shop and Operations Building at the Main Yards and Shops

- facility shall be supplied with two service feeders, each providing one half of the
- required capacity. Provision shall be made to enable transfer of selected loads
- between these feeders, to allow limited shop operations during a feeder failure.

B. All other facilities, including at-grade passenger stations, shall be supplied with one service feeder.

C. Where the service feeder emanates from a traction power substation, it shall be dedicated to that facility.

D. Where the facility is supplied directly by an electrical utility, the service shall be provided from the nearest existing reliable source.

E. Essential loads (as defined in Subsection 15.2.2 A) shall be transferred from the service feeder to a local emergency power supply in the event of power loss in the normal service feeder. Transfer shall also be affected for low voltage level conditions where the operation of essential equipment (as defined in Subsection 15.2.2 A) supplied from the feeder will be materially affected.

15.2.4 Loading of Distribution Equipment and Feeders

A. Loading of distribution equipment and feeders shall be based on sustaining continuously the demand loads, including provisions for future equipment and spare capacity.

B. Demand loads and demand factors for equipment or devices, including provisions for future units, shall be based on the values listed in Table 15-1.

C. Other demand factors shall be based on code requirements.

D. A demand of less than 100% can be applied to HVAC equipment where controls preclude continuous operation.

E. Demand provisions for spares of distribution equipment shall be based on the following percentages of the calculated demand at the equipment, namely:

- Panelboards - 20%
- Switchboards and Motor Control Centers – 20%

Table 15-1 Equipment Demands

	Equipment	Load (Watts)	Demand factor (%)
1.	Ticket Vending Machine (TVM)	1800	50
2.	Misc. Fare Collection Equipment	1500	50
3.	Security Surveillance Camera (CCTV) Stationary		
		100	100
4.	Convenience receptacles at passenger stations or future structures (where intended for use only by maintenance personnel)	180	100% of one receptacle per circuit
5.	(1) Power receptacle at each passenger stations	30A at 240V.	100% of one receptacle
6.	Miscellaneous equipment and devices at passenger stations	rated	100
7.	Normal lighting	rated	100
8.	Exit or emergency lights	rated	100
9.	Signage	rated	100
10.	HVAC equipment	rated	100
11.	Traction Power Substation	Refer to Traction Power Chapter 10	
12.	Signaling/Communication	Refer to Signaling and Communications Chapters 11and 12	

15.2.5 Voltage Levels and Control

A. Nominal utilization voltage levels and limits for the distribution of power shall be as follows:

1. 120, 240 or 277-Vac for single phase, 60 Hz operation
2. 208, 480-Vac for three phase, 60 Hz operation

B. Voltage drop from service entrance to farthest outlet, device or equipment shall be no greater than 5%, except for circuits supplying only motor loads or equipment rated for operation with a voltage range exceeding ± 10%.

C. Motors over 1/2 HP or devices or equipment over 2000 watts shall be supplied at 3-phase where practical. Preferred supply level is 480-Vac.

D. Groups of equipment, fixtures or devices shall be supplied from balanced: 3-phase, 3 or 4-wire, 60 Hz circuits where practical and economical.

E. Power supply to communication/signaling rooms, housings, or buildings, where supplied from passenger stations or other facilities, shall be at 480-Vac, 3-phase, 3-wire, 60Hz.

F. Power supply to fare collection equipment shall be 120-Vac. Power supply to surveillance cameras (CCTV) shall be at 120-Vac, except where powered from the communications system.

G. Distribution transformers rated 1 KVA and below shall be provided with NEMA standard full capacity, no-load taps.

H. Control circuits shall be supplied at a minimum of 125-Vdc, or 120-Vac. Circuits in excess of 1000 linear feet shall be effectively protected from capacitive pick-up.

15.2.6 Spare Capacity

A. The following specific provisions shall apply:

1. Lighting panelboards - 20% additional single pole circuit capacity. Provide a 20A, 1-pole circuit breaker in each space designated as a spare.
2. Distribution panelboards - as per lighting panelboards, except provide spaces only.
3. Switchboards - 20% of connected load. Provide a mixture of circuit breakers and spaces.
4. Motor Control Centers - 20% of connected load. Provide a mixture of size 1 starters and fully equipped spaces. Provide bus extension and allocate space for one or more additional future sections, where possible.
5. Underground or in-slab conduits - 25% additional unused conduits (minimum of one per run), sized so that any one circuit in the run can be relocated to one spare conduit.
6. Conduit sleeves through footings or floors (where accessible) - provide as for underground conduits.

7. Provide a minimum of four additional, unused 3/4-inch conduits between panelboards and accessible ceiling spaces, where the panelboards are flush-mounted in furred walls.

8 Wireways and pull boxes - provide 20% additional capacity or allocate space for additional wireways.

15.2.7 Spaces for Electrical Equipment

A. Electrical rooms and closets shall have sufficient space to house all equipment, including future units, and to properly ventilate the equipment. Adequate space shall be provided for working clearances and service aisles (where required) and for removal or replacement of the equipment.

B. Where possible, two access doorways shall be provided to electrical rooms. Doorways should be located as diametrically opposite to each other as practical. One such access doorway shall be sized to allow removal or replacement of the largest piece of equipment in the room, and shall be located such that the equipment can be moved through the facility to an outdoor area suitable for transporting the unit off-site.

C. Aisles in electrical rooms shall have sufficient clear width to remove equipment, where required. Minimum clear width shall be 3'-0".

D. Working space behind back or side enclosure panels shall be as required with a minimum of 2'-0".

E. Electrical rooms and closets shall be provided with ionization-type space smoke detectors.

F. One convenience duplex receptacle shall be provided in each electrical closet, as well as in each wall of every electrical room.

15.2.8 Wiring Methods and Materials

A. Wiring shall be run in conduits, ducts, or enclosed wireways. Troughs or cable trays are acceptable for use in maintenance or repair facilities only. Each feeder and branch circuit shall be installed in its own individual conduit unless combining feeder and branch circuits is permitted as defined in the following:

1. As specifically indicated on the Plans.

2. For lighting, multiple branch circuits may be installed in a conduit as allowed by the NEC and with the wire ampacity derated in accordance with the requirements of the NEC. Conduit fill shall not exceed the limits established by the NEC.

3. When field conditions dictate and written permission is obtained from the Engineer.

Feeder and branch circuits shall be isolated from each other and from all instrumentation and control circuits.

B. Minimum conduit size shall be 3/4-inch, except 1-inch for embedded or underground use and 1/2-inch for fixture stems.

C. Metallic conduit shall be galvanized rigid steel or electrical metallic tubing, hot dipped and electroplated for electrical metallic tubing.

D. Exposed or embedded conduits used where subject to physical abuse, or at open spaces, or in slabs subject to high-impact loads shall be rigid galvanized steel. No direct burial or metallic tubing shall be allowed. Exposed conduit inside the room may be the electrical metallic tubing or FRE conduit.

E. PVC schedule 40 or similar shall be allowed for ductbanks. Underground conduits may be nonmetallic. Where not protected by slabs, underground conduits shall be encased in concrete using preformed spacers and joints approved for encasement.

F. Conduits crossing under tracks shall be installed prior to sub-grade approval and encased up to 10 feet from the field side of each track.

G. Conduit termination to motors or other equipment subject to vibration shall be by flexible liquid-tight metallic conduits, and installed to provide a drip loop.

H. Expansion fittings shall be used where raceways pass through building expansion joints or in outdoor runs longer than 100 feet.

I. Fixtures shall not be supported from conduits.

J. Conduit fittings shall be manufactured of materials suitable for the adjoining conduit.

K. Conduits and nipples shall be terminated in insulating bushings (grounding-type for metallic conduit runs), except for the use of bell-ends in manholes.

L. Raceways shall be UL listed for the conductor's temperature rating.

M. All wiring shall be as indicated on the Plans. Wires shall be new and shall be soft drawn copper with not less than 97 percent conductivity. The wire and cable shall have size, grade of insulation, voltage, and manufacturer's name permanently marked on the outer covering at not more than 2-foot intervals. All wires shall conform to the latest Standards of the ASTM, and ICEA, and shall be tested for their full length by these Standards. Insulation thickness shall be not less than that specified by the National Electrical Code. Conductor material shall be copper. Buses shall be copper.

N. Terminal lugs and bus connections shall be tin-plated.

O. Wire sizes shall be American Wire Gauge (AWG) sizes with Class B stranded construction. Number 2 AWG and smaller shall be factory color coded with a separate color for each phase and neutral, which shall be used consistently throughout the system. Larger cables shall be coded by the use of colored tape. Conductors sized No. 1 and larger shall be Type 2, rated for 90 degrees C. All circuit conductors, #6 or smaller shall be "THWN" stranded copper. All other conductors shall be "XHHW" stranded copper. Minimum conductor size shall be No. 12 AWG, except No. 14 AWG for fixture lead in wires and control wiring, and No. 16 AWG for fixture wiring.

P. Individual or multiple conductor cables for power, control, and alarm circuits of 480 volts or less shall be insulated for not less than 600 volts and shall have insulation type as indicated on the Plans. "THWN" shall conform to ICEA S-61-402/NEMA WC 5 and UL 83 and "XHHW" shall conform to ICEA S-66-524/NEMA WC 7 and UL 44. Where wire size is not indicated, they shall be of the size required by the NEC, except that no wire external to panels and motor control centers shall be less than No. 12 AWG, unless specifically noted on the Plans. Panel control wiring shall not be less than No. 14 AWG. Where cable is indicated to be run in cable tray , said cable shall be UL listed for cable tray use. Power wiring shall be single or multiple conductors. Multiconductor control wiring is allowed. Cables installed in cable tray shall be TC-type.

Q. Insulation shall be thermoplastic or thermosetting (thermosetting for main feeders) rated for a minimum of 75 degrees centigrade (dry location rating). Insulation shall be suitable for dry and wet locations. Insulations suitable only for dry locations are allowable for well-drained exposed runs in dry locations, or inside equipment. Neoprene insulations are not allowed.

R. Conductors entering 100% rated equipment shall have 90-degree rated insulation (dry locations).

S. High-voltage cables shall have cross-linked polyethylene or Ethylene Propylene Rubber (EPR) insulation with a chlorosulfonated polyethylene or neoprene protective outer jacket.

T. Cable splices shall be avoided where practical; otherwise, they shall be made in accessible enclosures suitable for the purpose. Splices in wires No. 10 AWG and smaller shall be made with an insulated, solderless, pressure type connector, Type I, Class 1, Grade B, Style G, or Type II, Class 1 of FS W-S-610 and conforming to the applicable requirements of UL 486A. Splices in wires No. 8 AWG and larger shall be made with noninsulated, solderless, pressure type connector, Type II, Class 2 of FS W-S-610, conforming to the applicable requirements of UL 486A and UL 486B. They shall then be covered with an insulation and jacket material equivalent to the conductor insulation and jacket. All splices below grade or in wet locations shall be sealed type conforming to ANSI C119.1 or shall be waterproofed by a sealant-filled, thick wall, heat shrinkable, thermosetting tubing or by pouring a thermosetting resin into a mold that surrounds the joined conductors. Conductors, including grounding conductors, of different sizes shall be spliced and then soldered or welded. Splices in wet locations and all splices below grade shall be of the Exothermic type. Make splices only at pull or junction boxes. Crimp or indenter-type connectors are not allowed, except for control circuits landed on terminal strips. For wire smaller than #6 AWG: Use insulated conical spring type connectors, or "wirenuts". For #6 AWG and larger wire: Use solderless lugs and screw type connectors.

U. Right angle conduit bodies shall not be used for conductors larger than No. 8 AWG.

V. Wire nuts shall not be used for conductors larger than No. 10 AWG.

W. Back-to-back outlet boxes shall not be used in sound-rated partitions. A minimum separation of 6 inches shall be provided.

X. Receptacles shall be supplied separately from lighting circuits.

Y. Conduit and Wire Tags

1. Each wire and conduit run shall be identified uniquely within a facility.
2. Identification tags shall be of the permanent type, with a 1/8-inch (minimum) letter height.
3. The identification scheme shall be alphanumeric, using a sequential numerical suffix and the following prefixes:
   a. A for power wiring
   b. AX for controls outside of equipment

Z. All space conduits shall be cleaned and sealed.

AA. Wiring devices shall be specifications grade.

BB. Cable shall be rated 600 volts. Other parts of cable systems such as splices and terminations shall be rated at not less than 600 volts. Splicing shall join conductors mechanically and electrically to provide a complete circuit prior to installation of insulation.

CC. Provide trenching, backfill, and compaction for conduits installed underground. Multiple underground conduits shall maintain a 7 ½" separation measured from the center of each conduit for M.V. cable and a 2" separation measured from outside wall to outside wall for low voltage and signal wires, or as otherwise noted on the drawings.

15.2.9 Electrical Equipment and Devices

A. Equipment shall conform to the applicable ASTM, NEMA, and ANSI standards.

B. Distribution equipment shall be provided with molded case circuit breakers and full bus extension behind spaces. Main circuit breakers shall be provided only where required by code or where the equipment is fed from taps. Circuit breaker frame, trip, short circuit, and interruption ratings shall be as indicated on the Plans, except that they shall be coordinated with the ratings of the equipment actually furnished, and shall be modified where necessary to suit the equipment. Circuit breakers to be used in motor control centers shall be as indicated on the Plans. Where no indication of type is given on the Plans circuit breakers protecting motors shall be motor circuit protectors, and other circuit breakers shall be molded case type.

C. Except as otherwise indicated, provide fuses of types, sizes, ratings, and average time-current and peak let-through current characteristics indicated, or as required by NEC and equipment manufacturer, which comply with manufacturer's standard design, materials, and constructed in accordance with published product information, and with industry standards and configurations. Fuses 601 amperes and larger switchboards shall be UL Class "L", current limiting, time delay, 600 volt, with interrupting rating of 200,000 amperes RMS symmetrical (Bussmann KRP-C). Fuses protecting lighting and appliance branch circuit panels shall be UL Class "RK –1", current limiting, 600 or 250 volt, with interrupting rating of 200,000 amperes RMS symmetrical (Bussmann KTS-R or KTN-R), and current limiting, time-delay for 100 amperes and less (Bussmann LPS-RK or LPN-RK). Fuses protecting motor control centers and transformers shall be UL Class "RK-1", current limiting, time

delay, 600 or 250 volt, with interrupting duty is over 100,00 amperes RMS symmetrical (Bussmann LPS-RK or LPN-RK), and UL Class, "RK-5", time-delay for up to 100,000 amperes (Bussmann FRS-R or FRN-R). Fuses protecting motor branch circuits shall be UL Class "RK-5", time delay, 600 or 250 volt, 200,00 amperes RMS symmetrical interrupting rating, sized at 125% of motor nameplate full load amperes (Bussmann FRS-R or FRN-R).

D. Motor control centers shall be NEMA Class I or Class II, type B, drip-shield. NEMA Type 1 gasketed enclosures shall be provided for indoor use.

E. Disconnect switches shall be heavy-duty safety switches with a quick-make, quick-break operating mechanism, with full cover interlock, and indicator handle. The disconnect switches shall be furnished with fuses of the size indicated on the Plans. One set of spare fuses shall be furnished for each fused disconnect switch. Disconnect switches shall be NEMA type HD heavy duty construction, UL 98 listed. Disconnect switches shall be installed as indicated on the Plans.

F. A permanent identification nameplate shall be provided on the front of each equipment unit.

G. Except where provided integrally with the mechanical equipment, motors shall be of drip-proof, open construction, NEMA Class B design with a Class F insulation system. Totally enclosed ventilated units shall be used where subjected to the weather or splashing water.

H. Transformers shall be dry-type, Class H 220 insulation. Taps shall be provided in accordance with the Voltage Levels and Control subsection. Three-phase windings shall not be connected wye-wye. For transformers rated 100KVA or more single phase and 300KVA or more three phase, perform the following minimum field tests and checks before energizing equipment:

   1. Perform insulation resistance on each winding. Prior to testing, disconnect devices sensitive to test voltage. Test winding to winding and windings to ground.

   2. Inspect all mechanical and electrical interlocks for proper operation.

   3. Perform a turns-ratio test for each winding at all tap settings.

   4. Test control and protective devices for proper operation.

   5. Deliver all test reports to the Engineer.

I. Transformer sound ratings shall not exceed ANSI C57.12.57 requirements. Quiet-type transformer designs shall be used in office and other areas sensitive to noise. Transformers shall be installed as indicated on the Plans, and in accordance with the manufacturer's instructions and recommendations. Contractor shall provide painted metal wall brackets, when required.

J. Outlet covers shall be metallic. Plastic decorative covers are allowed only in office and public reception areas. Locking, tamper-proof type covers shall be provided in areas accessible to the public.

K. Devices or equipment enclosures in passenger stations or other areas accessible to the public shall be made tamperproof by use of special fasteners or locks. Where available, these devices or equipment enclosures shall be made vandal-resistant.

L. Ballasts shall be CBM certified. In office areas, ballasts shall have an "A" sound rating.

M. Convenience duplex receptacles shall be provided for use by maintenance personnel in all public and non-public areas of passenger stations. In public areas, receptacle shall be equipped with ground fault interrupter.

N. Controls for HVAC, sump pumps, and other electrically operated equipment in all stations shall be standardized wherever possible for ease of maintenance and repair.

O. Enclosures shall be fabricated from 14 gauge steel with seams that are continuously welded. Doors shall have full length piano hinges with the door removable by pulling the hinge pin. Unless otherwise indicated on the Plans, enclosures shall be NEMA 12 for indoors, NEMA 4X for corrosive areas, and NEMA 3R for outdoor installations. NEMA 4X enclosures shall be stainless steel. NEMA 3R enclosures shall be used in wet areas. Enclosures shall be installed as indicated on the Plans, and according to manufacturer's instructions. Enclosures shall be properly grounded, and shall include ground straps connected to hinged doors and accessories.

P. Weatherproof while in use outlet enclosures shall be used in locations where attachment plugs will be connected permanently, or for an indefinite period of time, in potentially wet or weather exposed environments. They are also to be used where outlets are subject to contamination, corrosion or damage.

Q. Dead-front panelboards, including lighting distribution and control panels, shall be furnished and installed as indicated on the Plans. Buses shall be copper. Mounting and type of enclosures shall be as indicated on the Plans. Where not indicated on the plans, indoor enclosures shall be NEMA 1 and outdoor enclosures shall be NEMA 3R. The minimum interrupting capacity of any device shall be as indicated on the Plans. Panelboards shall be service entrance rated where required, and as shown on the Plans. Panelboards shall be installed as indicated on the plans and according to manufacturer's instructions.

R. The Contractor shall furnish and install pullboxes where indicated on the plans and as necessary to complete the underground distribution system. The plans indicate the intended location of pullboxes and routing of ductbanks and direct buried conduit. Field conditions may affect actual routing. Pullboxes shall be sized to facilitate the duct bank installation. The pull boxes shall be designed for traffic conditions, and the pull box and cover shall be designed for heavy traffic bridge loading unless otherwise noted. The pull boxes shall have dimensions indicated on the plans. The pull boxes shall be constructed of concrete.

15.2.10 Supply from Traction Power Substations

A. Passenger stations shall be supplied power from a 3-phase, 4-wire 60Hz feeder originating at a nearby traction power substation, whenever practical and economical. The voltage level shall be coordinated with the traction power substation design.

B. Reliability and availability of the feeder shall be equivalent to the requirement of Subsection 15.2.3 as outlined in the Reliability and Load Transfer Requirements subsection.

C. The capacity of the feeder shall allow for continuous operation at the station peak demand, with voltage drop not to exceed 3% between the substation transformer's secondary terminals and the feeder's terminals at the passenger station.

D. The feeder and its protective devices shall be coordinated with the station's main circuit breaker and service panel withstand ratings.

E. Feeder conductors shall be run physically separate of any traction power conductors, including within manholes, handholds or pull boxes, by means of the use of voltage level barriers. Minimum conductor size shall be #I AWG.

F. Feeder runs shall be provided with a minimum of one spare conduit.

15.3 Electrical Service

15.3.1 General

A. Electrical service to facilities shall be provided from applicable electric utility circuits in the vicinity, except where the supply is from a traction power substation.

B. Electrical service requirements of the applicable electric utility shall be strictly observed and shall be obtained through the METRO Utility Coordinator.

D. The main yard and shop building(s) shall be supplied from the Yard and/or Shop traction power substation(s).

F. Passenger stations shall be supplied with a 100A service as a minimum.

G. The SES shall be a single panel, frame or assembly of panels on which shall be mounted on a deadfront mounting plate, circuit breakers or fused switches, metering equipment and any monitoring or protection devices as indicated on the plans. The overcurrent protection shall be rated as indicated, and as specified elsewhere herein.

H. The SES shall be a one-piece enclosure with front accessibility unless otherwise required. The SES shall have a metered distribution section complete with meter socket and factory installed test blocks, customer metering, and a pull section, overhead or underground, as indicated on the plans; all of which shall comply with the requirements of the serving utility.

15.3.2 Supply Voltage Levels and Limits

A. Nominal levels shall be in accordance with Section 15.2.5:

B. Voltage tolerance limits shall be those specified by ANSI C 84.1 for the supply level used.

15.4 Emergency Power Supply

Emergency power provisions for facilities shall be provided. The requirements shall be evaluated in conjunction with overall systems designs.

15.5 Grounding

15.5.1 Passenger Station Grounding System

A. A principal goal shall be that of designing the passenger station electrical system to provide safety to both personnel and passengers. The design of the grounding system shall preclude any unsafe condition to system personnel, patrons, or the community at large.

B. Each passenger station shall be equipped with two ground rod beds, one at each end of the passenger station platform, interconnected by a copper cable ground loop embedded in the concrete of the station platform.

C. A copper bonding connection shall extend from the loop to every canopy-support and lighting fixture support column where it shall be welded by exothermic process. For those stations with electrical rooms, a grounding plate shall be affixed to one of the four walls. The grounding plate shall be connected to the ground loop in the station platform with a copper cable cad-welded at both ends. This grounding plate shall be used for connecting the grounding circuits of equipment placed in the electrical rooms. The passenger station grounding loop shall not be interconnected with any substation ground mat or any other grounding system.

15.5.2 Grounding Requirements

A. All non-current-carrying metal enclosures and all alternating current equipment shall be securely connected to the grounding system.

B. All grounded metal surfaces such as fare vending machines, railings, furniture, etc. within 5 feet of a vehicle stopped at the platform shall be insulated to prevent touch potential to ground.

C. Ground rods shall be copper-clad steel conforming to UL 467, 3/4 inch in diameter by 10 feet in length. Unless otherwise indicated, ground rods shall be driven into the ground until tops of rods are approximately 6 inches below finished grade. Where the specified ground resistance cannot be met with the indicated number of ground rods, additional ground rods, longer ground rods, or deep-driven sectional rods shall be installed and connected until the specified resistance is obtained, except that not more than three additional ground rods shall be required at any one installation. Ground rods shall be spaced as evenly as possible at least 6 feet apart and connected below grade.

D. Service entrance ground wires shall be sized in accordance with NEC Table 250-66, unless otherwise indicated on the Plans. After being located to provide maximum physical protection, exposed ground wires shall be securely attached to structural supports at not more than 2-foot intervals with suitable fasteners. Bends greater than 45 degrees in ground wires are not permitted. Routing of ground conductors through concrete should be avoided, except where specifically called for in these Documents. When concrete penetration is necessary, nonmetallic conduit shall be cast flush with the points of concrete entrance and exit, so as to provide an opening for the ground wire. The opening shall be sealed with a suitable compound after installation of the ground wire.

E. Neutral conductors shall be grounded where indicated. Equipment grounding conductors shall be sized in accordance with NEC Table 250-122, unless otherwise indicated. Ground wires shall be protected by conduit, where such wires run exposed above grade in nonfence-enclosed areas, or are run through concrete construction. Where concrete penetration is necessary, nonmetallic conduit shall be cast flush with the points of concrete entrance and exit, so as to provide an opening for the ground wire. The opening shall be sealed with a suitable compound after installation of the ground wire. Bends greater than 45 degrees in ground wire connections to the ground rods are not permitted.

F. Neutral conductors shall be grounded where indicated. Equipment grounding conductors shall be sized in accordance with NEC Table 250-122, unless otherwise indicated. Ground wires shall be protected by conduit, where such wires run exposed above grade in nonfence-enclosed areas, or are run through concrete construction. Where concrete penetration is necessary, nonmetallic conduit shall be cast flush with the points of concrete entrance and exit, so as to provide an opening for the ground wire. The opening shall be sealed with a suitable compound after installation of the ground wire. Bends greater than 45 degrees in ground wire connections to the ground rods are not permitted.

G. Equipment frames of motor housings, metallic tanks, metallic equipment enclosures, metal splicing boxes, and other metallic noncurrent-carrying metal items, shall be grounded. Connections to earth shall be made in the same manner as required for system grounding. Equipment or devices operating at less than 750 volts may be connected to secondary neutral grounding electrodes.

H. Metallic structures and buildings shall be grounded per NEC.

I. When required, grounding rings shall be installed using 4.0 bare copper cable with ground rods at least 25 feet intervals using exothermic weld connecting means as indicated on the plans in accordance with NEC requirements.

J. It is the intent of these Contract Documents that all device and equipment grounds shall be run as a separate conductor in the conduit from the equipment to the distribution panels or system ground. Wireways and enclosures shall be properly bonded and grounded, and ground conductors shall be run for all circuits.

K. Equipment cases and devices shall be grounded. Ground rods shall be driven, and concrete encased conduits installed, before a building, or structure is built, and ground conductors brought through the concrete to accessible points for grounding equipment. These systems shall be installed at each structure, where transformers, switchboards, panelboards, and MCCs are installed.

L. Duct banks shall contain a concrete encased system bare copper ground conductor. The system ground conductors shall run continuously in duct banks, through handholes and other raceway boxes. The system ground shall be connected to the structure grounding systems to provide a continuous grounding system. Each metallic raceway, panel, switchboard, and other metallic devices associated with the electrical and control systems shall be bonded to this grounding system.

15.6 General Area Lighting

15.6.1 General

A. Included in this subsection are requirements for normal and emergency lighting systems for general areas along the METRO LRT project.

15.6.1.1 Requirements

A. The lighting system shall:

1. Be relatively simple and economical to construct and maintain.
2. Be energy-efficient.
3. Be vandal-resistant (in spaces accessible to a patrons or to the general public).
4. Effectively control glare or other extraneous reflections in the visual field.

B. Lighting system efficiency shall be achieved by:

1. Selecting high efficiency light sources, ballasts, and appropriate fixtures;
2. minimizing light spillage; and
3. employing supplementary luminaries to achieve high task-illumination levels.

C. Consideration should be given to the location and arrangement of lighting circuits and panel configuration to accommodate retrofitted automated energy control devices.

D. Yard lighting shall provide sufficient illumination to permit operations and maintenance activities to be performed safely on a 24-hour basis. A minimum illumination of minimum-average 1 foot-candle, as measured at ground level between light poles, shall be provided.

Yard lights, towers, poles, or stanchions should be designed and located to maximize maintenance accessibility, minimize shadows, and avoid interference with operations.

High mast poles used for area illumination shall be climbable and limited to 70 feet in height. Poles with fixture-lowering mechanisms shall not be used. Where practical, poles shall be located in the aisles used for OCS supports.

E. Fixtures shall be provided with integral ballasts and fuses.

15.6.2 Calculations

A. Calculations shall conform to the procedures and recommendations in the applicable IES publications (and their appendixes).

B. Generally, the methods to be followed shall be:

1. General lighting of indoor spaces - zonal cavity method
2. Indoor task lighting - point-by-point method
3. Outdoor spaces - point-by-point

C. Illumination levels for work areas shall be calculated at the working plane, generally a horizontal plane set at 2'-6" above the finished floor level, except that for task lighting the actual working height shall be used whenever this information is available.

D. Illumination levels for walking surfaces, egress paths and security lighting shall be calculated at the surface being illuminated, except as otherwise required by codes or regulations or as specified herein.

E. An average maintenance factor for use in all areas of the transit system lighting other than offices should not exceed 70%.

F. Reflectance values shall be based, whenever possible, on the actual reflectances of the proposed materials. Generally, the reflectances should fall in the recommended range tabulated in Table 15-2. Where specific reflectances are not available, the values in Table 15-3 shall be used.

Table 15-2 Control Room, Recommended Percent Reflective Values
Recommended Percent Reflectance Values

Surface	% Reflectance Value
A. Ceilings	60 to 90
B. Walls	50 to 85
C. Floors	15 to 35
D. Furniture & Consoles	20 to 40

Table 15-3 General Areas, Design Percent Reflective Values
Design Percent Reflectance Values
(See Subsection 15.7.2F For Application)

Surface	% Reflectance Value
A. Office areas	
1. Ceiling	60 to 90
2.	50 to 85
3. Floor	15 to 30
B. Other Indoor Areas	
1. Ceiling	50
2. Wall	50
3. Floor	10
C. Outdoor Areas	
1. Ceiling	10
2. Wall	50
3. Floor	10

15.6.3 Illuminance Values

A. The design target illuminances shall be the minimum maintained values as listed in Table 15-4. However, illumination levels for tasks requiring sustained visibility shall be a minimum of 20 foot-candles.

B. Illuminance values not listed shall be those recommended by the IES or CPTED for the particular (or sufficiently similar) activity, using a zero weighting factor.

C. The illumination on all entrance and exit roadways shall be graduated up or down to the illumination level of the public street or highway, as much as practical.

D. Illumination for access roadways shall be in accordance with IES RP-8 recommended levels for the local intermediate vehicular traffic classification, with an "R2" roadway surface.

E. Public Street illuminance values shall be based on local jurisdiction standards.

Table 15-4 Normal Lighting Levels, Target Illuminance Values (Average, Maintained In A Horizontal Plane Unless Otherwise Noted)

	Foot-Candles	At
A. Passenger stations (at-grade)		
1. Platform under canopy cover	5	Floor level
2. Platform edges, under canopy cover	5	Floor level
3. Platforms, uncovered	5	Floor level
4. Platform edges, uncovered	5	Floor level
5. Fare collections areas a. Service b. On face of machine c. Area illumination	 5 20 20	 In the equipment Vertical Floor level
6. Passages	15	Floor level
7. Stairs	25	On treads at landings
8. Walkways		
a. Ramps leading to platforms b. Connecting with public walkways	5 2	Floor level Floor level
9. Elevator Cabs	20	At Floor level
10. Electrical and mechanical, elevator machine, communication rooms	20	2' - 6" above floor level
11. Service and Utility Rooms		
12. Storage rooms	5	2' - 6" above floor level
B. Passenger loading areas (outside of station platforms)		
1. Bus loading	5	Floor level
2. Bus Loops	2	Floor level
3. Kiss and Ride areas	5	Floor level
C. Parking Areas		
1. Self-parking	2	At pavement
2. Pedestrian walkway	3	At pavement
3. Entrance and exit roadways	2	At pavement (See Section 15.7.3C)
D. Transit Right-of-Way and Storage		
1. Yard and other special trackwork areas	1 (minimum)	At rail level
2. Transit vehicle storage area	2	At rail level
E. Operations and Central Control Facility (Central Control Room)		
1. General Illumination	100	2'-6" above floor level
2. Face of Control Panels	30	Vertical
3. Shining on CRT displays	3	Vertical
4. Rear of Control Panels	10	Vertical
5. Dispatch Desks	50	Vertical
6. Shining on rear projection displays	3	At desk level
F. Maintenance in Central Control Facility		
1. Inspection Area	100	
2. Repair Work Area	200	
Illumination levels should be variable ± 50 percent of levels indicated		
G. Yards and Shops		
1. Paint Shop Area	30 to 50	
2. Paint Both "Inside"	100	
3. Wheel Truing Area	100	
4. Car Wash Area	50	
5. Offices	50	
6. Maintenance Area	50 to 70	

Table 15-4 Normal Lighting Levels, Target Illuminance Values (continued) (Average, Maintained In A Horizontal Plane Unless Otherwise Noted)

	Foot-Candles	At
H. Outside Areas	1 Foot-candle minimum for emergency egress.	Floor level
	5 Foot-candles minimum outside building entrance and parking stalls for individuals with disabilities for minimum 15 feet radius.	
I. Storage Tracks	1 Foot-candle minimum, in the aisles with cars parked on the tracks and casting shadows.	Floor level

15.6.4 Light Control

A. Outdoor luminaires should be so positioned that they do not result in glare or otherwise hinder nighttime train movements. Care must be taken to minimize glare on adjacent properties or to motorists. This is particularly important in residential areas.

B. Recommended target brightness ratios are given in Table 15-5.

C. Small areas for accent, design interest, or message purposes, such as for station identification, destination sign, map case, safety or guidance, shall be allowed to have brightness ratios in excess of the preceding criteria.

D. Luminaires in staffed control rooms should be so positioned that no reflected glare from meter faces or cathode ray tube monitoring screens meets the operator's eyes while at his workstation.

Table 15-5 Normal Lighting Levels, Target Brightness Ratios

Area	Brightness Ratio
A. Between stairs, escalators, etc. to general platform, concourse or mezzanine areas	2 to 1
B. Station interior spaces	
1. Wall to floor	3 to 1
2. Wall to ceiling	1 to 3
3. Luminous coffers to walls and/or adjacent horizontal surfaces	10 to 1
4. Luminaires to adjacent surfaces	20 to 1
C. Station exterior areas	
1. Wall to floor	No limit set
2. Wall to ceiling	No limit set
3. Luminaires to adjacent surfaces	40 to 1
D. Switchrooms or other control and equipment rooms	
1. Wall to floor	3 to 1
2. Wall to ceiling	1 to 3
3. Luminaires to adjacent surfaces	20 to 1

15.6.5 Emergency Illuminance Values

A. Emergency average target levels shall be, maintained at values as listed in Table 15-6.

B. Emergency lighting fixtures exit lights should be located to minimize the possibility of being obscured by stratified smoke from a fire.

Table 15-6 Emergency Lighting Levels, Target Illuminance Values

Area	Illumination Minimum Levels in Foot-Candles (fc)
Service and other utility or equipment rooms accessible to maintenance crew during power outage	1
Electrical service room	0.5
Stairs	1
Underground areas	1
Yard and shop areas	1
	0.25 FC along roadway

15.6.6 Emergency Lighting

A. The emergency lighting system shall consist of fluorescent or quartz lamps fed by an emergency lighting power supply unit and which do not require re-strike time after normal power fails.

B. Emergency lighting levels shall be per Table 15-6.

C. All emergency lighting branch circuits shall be carried in separate conduits running from the emergency lighting power supply unit to the emergency lighting fixture. Pull boxes shall be separate boxes or common boxes with barriers. All other requirements shall conform to National Electric Code Article 700.

15.6.7 Emergency Lighting Control

A. Emergency lighting branch circuits shall be controlled by an automatic transfer switch in the emergency lighting power supply unit which switches on when normal power fails and off (after an adjustable time delay of 0-20 minutes) after normal power returns.

B. For at-grade, elevated passenger stations and at the yard areas, emergency light circuits shall also be controlled by an externally mounted photocell unit, which prevents the emergency lights from operating during the daytime.

C. The photocell unit shall be located where no artificial light interferes with its function.

15.7 Street Lighting

15.7.1 General

A. The purpose of this section is to outline the design process for street lighting along the light rail segment. Design criteria for street lighting differs among different jurisdictions within the Phoenix metropolitan area. For this reason, design criteria for street lighting for the light rail shall differ across cities as well and be governed by those cities and utilities that the light rail resides.

15.7.2 City of Phoenix

A. Lighting design criteria for METRO LRT projects located in the City of Phoenix shall be governed by the Streetlighting Policy for the City of Phoenix, Arizona originally adopted by Phoenix City Council in July of 1961. Any street light design in the City of Phoenix

associated with the METRO LRT project must refer to this document. This document will be finalized in January 2007. The following is from the current Streetlighting Policy for the City of Phoenix.

15.7.2.1 Design Guideline

A. For street light design along the METRO LRT project, the engineering consultant is responsible for the design of the project including the street light layout. The City of Phoenix owns the poles and fixtures and the utility companies own the electrical service.

B. Spacing will be approximately 200 to 250 feet using 30,000 lumen High Pressure Sodium lighting. Streets will be lighted on two sides using staggered spacing. Spacing will be 200 to 250 feet along the same side of the street; 100 to 150 feet between opposite sides of the street. In an effort to achieve reasonable uniformity, deviations away from the point of radius are permitted up to 25 feet. Any further deviation must be approved by Street Transportation Department, Streetlight Section.

C. All poles are to be located approximately 1-foot back of sidewalk where the sidewalk abuts to curb. Where the sidewalk is detached to create a landscaped area, poles are to be located approximately 4-feet back of the curb. Deviations must be approved by Street Transportation Department, Streetlight Section. Contact the Street Transportation Department, Streetlight Section, for developments in Downtown Phoenix.

D. The layout and design shall include existing and known future streetlight location information for all streets adjacent to and across from the proposed development.

E. Streetlights must be shown on all roadway right-of-way adjacent to private developments. Any design conflicts shall be resolved to the satisfaction of the electrical utility company and City of Phoenix.

F. Effort shall be made during the design stage to assure that two (2) street lights are located at each major street intersection and one streetlight at all other intersections (except when neighborhood traffic calming devices are installed where additional lights may be required, see detailed drawings).

G. Label specific locations, sizes, and dimension from center line and/or monument line along with the following:

1. Existing and proposed underground utilities
2. Existing and proposed overhead utilities
3. Face of curb
4. Width of sidewalk
5. Width on any Public Utility Easement (PUE)
6. Edge of right-of-way
7. Edge of pavement

H. There should be a minimum six (6) feet of clearance between streetlight poles and fire hydrants, City water facilities, or City sewer facilities.

I. The public streetlight system shall be installed in the right-of- way.

J. Any public street cul-de-sac having a depth of one hundred fifty (150) feet or greater from face of nearest curb of intersecting street to cul-de-sac radius point shall have a streetlight or lights located in the cul-de-sac.

K. Public streetlighting plans shall show luminaire and pole type.

L. The streetlight design shall be submitted on E size sheets (24 inches by 36 inches). Plans shall be prepared so that north is to the top or right side of the sheet. The scale for the streetlight plan shall be 1- inch equals 20 feet or 1-inch equals 40 feet.

M. Design line characteristics are as follows:

1.Solid medium for proposed street improvements

2.Light and/or dashed for existing street improvements

3.Bold for streetlight system design

N. All existing and/or proposed driveways and American Disability Act (ADA) ramps shall be shown on the streetlight plans.

O. Information needed on each set of plans:

1. Vicinity Map
2. Legend
3. Construction Notes
4. General Notes as Required
5. Project Number/Kiva Number, Project Title and Address, if applicable (36 point minimum font)
6. Blue Stake Caution Label
7. Quantities List
8. City Project Number, if applicable
9. Utility provider
10. Owner's name, address and phone number on the cover sheet
11. Street light design professional name, address and phone number on the cover sheet
12. Project title block fillout out with name and location of project
13. Index of sheets
14. Abutting streets
15. Provide a quantity tabulation of the number of streetlight poles on the cover sheet

16. Provide a legend with luminaire description, luminaire mounting height, pull box size and type, existing luminaire type, pole and wattage and traffic signal mounted luminaire type, pole and wattage.

17. Provide stations at all intersections

18. Show all existing and proposaed driveway locations

19. Label adjacent zoning and land use

20. Construction notes indication al equipment to be installed, removed or relocated

21. All existing and proposaed waterlines, fire hydrants, overhead and underground utilities must be shown

22. Locate proposaed trees at least 20 feet from a proposaed street light pole location

P. The layout and design shall include existing and known future streetlight location information for all streets adjacent to and across from the METRO LRT project. This is particularly important for light rail park and ride locations.

Q. Any public street cul-de-sac having a depth of one hundred fifty (150) feet or greater from face of nearest curb of intersecting street to cul-de-sac radius point shall have a streetlight or lights located in the cul-de-sac. This is particularly important with METRO LRT park and ride locations.

R. Connections shall be per serving utility company standards. Each pole shall have an 8' by 5/8" copper clad ground rod driven beneath pull box. A #6 bare copper lead from the ground rod in pull box to landing lug in streetlight pole hand hole is required.

S. It is the contractor's responsibility to contact the utility company for coordination of the trenching and the installation of conduit.

T. Wiring shall be installed per serving utility company standards. Conduit shall be installed at the depth specified on their plans.

U. Trench shall be installed per serving utility company standards. The use of a common electric utility company trench is permitted.

V. Streetlight spacing shall be in accordance with Table 15-7 below:

Table 15-7Spacing Criteria

Utility Company	Watts	Lumens	Mounting Height	Standard Spacing	Spacing Type
SRP	250W	30,000	35'	200-250'	Staggered
APS	250W	30,000	34'-3"	200-250'	Staggered

W. In an effort to achieve reasonable uniformity, deviations in this spacing may be permitted up to 25 feet. Any further deviation must be approved by Street Transportation Department, Streetlight Section.

X. In cases where the streetlights facilities are in conflict with underground or overhead utilities streetlights may be set a minimum of two feet back of curb.

Y. All street light poles and equipment should be shown with station and offset dimension.

Z. Street light equipment shall conform to approved manufacturers.

AA. Construction plan sheet format to follow COP standards. CAD details and standards will be provided by COP Street Light Department.

15.7.2.2 General Requirements

A. Prior to submitting a street light layout, the streetlight design consultant shall examine all general construction drawings and visit the construction site to become familiar with existing conditions under which he will operate and which will in any way affect the work under the contract. The consultant shall also be aware of any additional requirements normally imposed by affected Utility Company and/or other regulatory agencies in constructing like work.

15.7.3 City of Mesa

A. Lighting design criteria for METRO LRT projects located in the City of Mesa shall be governed by the Chapter 9 of the Engineering and Design Standards – Public Street Lighting Requirements. Any street light design in the City of Mesa associated with the METRO LRT project must refer to this document. The following is from the current Chapter 9 of the Engineering and Design Standards from the City of Mesa.

15.7.3.1 Design Guideline

A. Street light design criteria for the City of Mesa is in accordance with the Illuminance Criteria method listed in the American National Standard Practice for Roadway Lighting, RP-8-00, as published by the American National Standards Institute (ANSI) and the Illuminating Engineering Society of North America (IESNA). Tables 2 & 9 of RP-8-00 provide the minimum recommended values that are to be met by all public street lighting designs within the City of Mesa.

B. Designs shall not exceed the recommended Uniformity Ratio Value for the appropriate street classification. The maximum light level shall not exceed twenty-five percent (25%) of the recommended minimum maintained average values of Table 2, RP-8-00. Calculations provided to prove conformance to the minimum recommended values in Table 2 of RP-8-00 are to be in footcandles (fc).

C. The calculation/measurement grid shall extend to the face of curb on both sides of the public street rather than to the edge of pavement as described in RP-8-00. Intersection lighting levels shall be a minimum of the sum of the values recommended for each public street that forms the intersection. The area is defined by the extension of the face of curb alignment across the street to match the opposing face of curb alignment.

D. Street lights are to be placed on both sides of the street with staggered spacing. Pole spacing shall be based on the results of the lighting analysis.

E. Street light foundations, pull boxes and lighting control cabinet pads shall be adjacent to the sidewalk when feasible. Street light poles shall be offset from the back of curb seven and one half feet (7.5') unless otherwise approved.

F. All METRO LRT related projects shall include a lighting analysis of the existing conditions, the proposed improvements and any future street widening, which is based on the adopted 2025 Mesa Transportation Plan. The result of this analysis shall be the preparation of photometric calculation sheets based upon the street light design sheets and shall be included as part of the construction document submittals.

G. All adjacent street light poles, mast arms and luminaires shall be of the same height, length and type when installed on local streets unless otherwise directed and approved by the City of Mesa Traffic Engineer. All luminaires installed on the public street lighting system must be from one of the following approved manufacturers – General Electric Lighting Systems, Inc. or Hubbel Lighting. All luminaires installed shall be full cutoff with ballast at 120/240 volt. All lamps shall be high pressure sodium unless directed otherwise.

H. Street light poles to be installed are to be a P-206 when the light pole is adjacent to or within a residential neighborhood or a P-207 when in office, retail, commercial or industrial zoning districts. Street light pole foundations shall be per Mesa Standard Details M-76.1 and M-76.2. Where a proposed pole foundation will be in conflict with an existing City of Mesa natural gas main, the gas main shall be encased per City of Mesa Natural Gas Detail GP-19.

I. Conduits shall run in a direct line from pole to pole or pull box to pull box. Conduits shall be dimensioned on the plan with a minimum of one foot (1') from edge of sidewalk or two feet (2') from the curb in median islands. Minimum depth from the top of curb or street pavement finish grade is to be twenty-four inches (24") unless otherwise approved. Conduits are required to be two-inch (2") diameter except that a one-inch (1") diameter conduit shall be used between the circuit pull box and street light pole. The conduit from the point of service connection to the electric utility's facilities shall be per the specifications of the electric utility.

J. The maximum numbers of street light circuits from a lighting control cabinet is two (2). The typical total load of a single circuit shall not exceed 24 amps. Where a control cabinet is utilized the street light circuit shall be 240 volt. Where a control cabinet is not utilized the street light circuit shall be 120 volt. Electrical service shall be 120/240 volt. The photo control circuits shall be 120 volts which are from street light control cabinets to the photoelectric controls.

K. All wire used in the public street lighting system shall be stranded copper. All conductors in the power circuit shall be XHHW/XHHW-2. All conductors in the street light circuit shall be XHHW/XHHW-2. All conductors in the photo control circuit shall be THHN/THWN. All wires intended to be used as a ground bond shall be seven (7) strand copper where the minimum gauge is No. 8 (AWG). The wire to be used in the power circuit shall be No. 2 AWG minimum. The wire to be used as a conductor in the street light circuits shall be based on voltage drop calculations. Minimum gauge for street light circuit shall be No 10 AWG minimum. The wire to be used in the photo control circuit shall be No. 12 AWG minimum. The wire to be used as a conductor in the street light pole shall be No. 12 AWG minimum.

L. The design engineer shall contact the appropriate electric utility company to establish a point of service. It is the responsibility of the designer to coordinate the proposed project design with the utility company's approved point of delivery.

M. Voltage drop calculations are required to be submitted with the construction documents. The voltage drop between the electric utility point of delivery pull box and the lighting control cabinet shall not exceed one percent (1%) assuming 240 volts at the pull box and a maximum 48 amp load at the lighting control cabinet. The voltage drop between the lighting control cabinet and the end of each lighting circuit shall not exceed three percent (3%).

N. The photometric results of the lighting analysis shall be shown on plan sheets that utilize the civil engineering base sheets for the proposed public street improvements. The X and/or Y coordinates shall match the stationing on the civil engineering improvement plans.

O. The public street light system shall be designed for, and installed in the public street right-of-way. Cul-de-sac type streets shall have street lights installed within the cul-de-sac to meet the recommended light levels if the radius point of the cul-de-sac is fifty-seven feet (57') or greater from the centerline of the intersecting street. This is particularly important with light rail park and rides.

P. Luminaires shall overhang the public street paving a minimum of one foot (1') unless otherwise approved and noted on the improvement plans.

Q. A minimum of four feet (4') of clearance shall be maintained around all street light pole foundations other than public utilities. The normal clearance between a public utility and the street pole foundation is one foot (1'). There shall be a minimum of five feet (5') of clearance between any street light pole or lighting control cabinet and a fire hydrant. There shall be a minimum of six feet (6') of clearance between any street light pole or lighting control cabinet and a driveway. There shall be a minimum of eighteen feet (18') of clearance between any street light pole or lighting control cabinet and any trees. There shall be a minimum of seven feet (7') of clearance between any street light pole or lighting control cabinet and any landscaping shrubs or bushes. A minimum of six feet (6') of clearance shall be maintained between street light equipment and energized overhead lines or current carrying facilities. A minimum of three feet (3') of clearance shall be maintained between street light equipment and the overhead electric common neutral line. A minimum of one foot (1') of clearance shall be maintained between street light equipment and any other overhead utility line including, but not limited to, telephone lines. Where it is not possible to maintain the required clearances, it is the developer's {need to define} responsibility to relocate any underground or overhead facilities that are in conflict with the public street lighting system.

R. All poles on the public street lighting system are required to be identified by stationing. Design plans shall show the station number for both proposed and future poles as well as any existing poles. All poles on the public street light system are required to be identified by a public street address number. The City Plans Examiner will provide addresses during the plan review process.

S. The lighting control cabinet shall be in accordance with Mesa Standard Detail M-75.1 and M-75.2. All control cabinets are required to be identified by stationing. Design plans shall show the station number for both proposed cabinets as well as any existing cabinets within the vicinity of the project. All control cabinets are required to be identified by a public street address number. The City Plans Examiner will provide addresses during the plan review

process. Electrical service to the lighting control cabinet shall be 100 amps, 120/240 volts single phase. The engineer shall assure that the available fault current at the lighting control cabinet shall not exceed 10,000 amps. The electric control panel for the lighting control cabinet will be furnished and installed by the City of Mesa Transportation Division. Separate lighting control cabinets are typically required when streetlights are going to be installed on both sides of a public street. It is the responsibility of the developer and design team to assure that the locations of the lighting control cabinets coincide with the point of power delivery as established by the electric utility.

T. The distance between pull boxes (which also includes the hand holes on poles) shall not exceed two hundred feet (200'). Standard location of pull boxes is adjacent to the public sidewalk when possible. A pull box shall be installed in any horizontal conduit run that has a change in direction greater than forty-five degrees. A pull box shall be installed whenever a conduit run branches to a conduit run on an intersecting public street. A pull box shall be installed whenever a conduit crosses a public street. Pull boxes are to be installed per Mesa Standard Detail M-74.1 and M-74.2. Pull boxes shall be offset from the light pole a minimum of five feet (5') center to center. A pull box shall be installed at each street light pole where the conduit to be installed is one and one half inches (1.5") or greater.

U. The photocell for the photo control circuit is typically installed on the first street light pole on each circuit from the lighting control cabinet.

15.7.3.2 General Requirements

A. Public street lighting plans shall be based on the civil engineering improvement plan base sheets and shall show all existing and/or proposed off-site public improvements. Public street lighting plans shall include the City of Mesa general notes for public street lighting and traffic signals. The City of Mesa standard details for the public street lighting system are to be referenced in construction note callouts. Construction notes for public street lighting shall refer to the Mesa Standard Detail number as well as the specific specification number where applicable.

B. Reproducible mylars of the street light design sheets are required to be submitted upon approval of the public street light design. The street light design sheets are to be incorporated into the civil engineering design set and the design sheets and the mylars shall be sequentially numbered.

C. The street light designer shall supply a sealed cost estimate prior to the approval of the street light design.

15.7.4 City of Tempe

A. Lighting design criteria for METRO LRT projects located in the City of Tempe shall be governed by the Street Lighting Requirements located within the Engineering Design Manual for the City of Tempe. Any street light design within the City of Tempe associated with the METRO LRT project must refer to this document. The following is from the current Engineering Design Manual for the City of Tempe.

15.7.4.1 Design Guideline

A. Luminaires shall be 30,000 Lumen high pressure sodium with full cutoff. Mounting height shall be at 32 feet.

B. Street lighting poles shall be located 2 foot back of curb or 2 foot back of sidewalk, when possible. Street lighting shall be located on public road rights-of-way, at the side lot line of the property where possible. When streetlights are to be installed on separate steel poles, the following design levels shall be maintained:

   1. Roadway width - (variable)

   2. Two sided - staggered, opposite side or median (dual mast arm)

   3. Minimum Average Foot Candles - 1.2 f.c.

   4. Uniformity Ratio - 4:1

C. Where power poles are to remain adjacent to the roadway, streetlights may be mounted on the power poles when City and utility standards can be met or steel poles shall be interset where needed to meet City standards. Plans shall include the nearest adjacent street lights with the distance to those lights noted on the plans.

D. The utility, upon receipt of the approved street lighting plan, shall design the street lighting circuits and assign street identification numbers.

E. All trenching, excavating and backfilling is performed by the electrical contractors and is per utility company and MAG specifications. The electrical contractor shall provide and install all conduit and pull wire per utility company specifications. The electrical contractor shall install pull boxes as near to the base of each pole. The electrical contractor also provides and installs all the necessary conductor for a complete installation from the pull box to the luminaire, including pole foundations.

F. The utility shall install the conductors from the source of feed to the pull box as required and make all necessary connections within the pull box.

G. Plans submitted to the City of Tempe shall indicate street light location, luminaire type, lamp type and size, mounting height and pole type.

H. Street lighting structures shall use high-pressure sodium full cut-off luminaires controlled by individual photocells mounted on steel poles. The spacing of the poles will be based on light level requirements, type of street, mounting height, type of luminaire and illumination requirements.

I. All designs shall be in accordance with the National Electrical Code and National Electrical Safety Code. All designs shall also conform to all city laws and codes.

J. All street lighting locations shall be marked with the identifying number, utility index number and street station. Addresses and index numbers will be provided by the City.

15.7.4.2 General Requirements

A. Street lighting plans shall be forwarded to the Transportation Division for review and approval. The plans shall include street lighting poles, pole foundations, mast arms, luminaires, receptacles, conduits, pull boxes and all hardware associated with new or existing street lighting systems.

15.7.5 City of Glendale

A. Street light design criteria for the City of Glendale is in accordance with the Street Lighting Manual for the City of Glendale. Any street light design within the City of Glendale associated with the METRO LRT project must refer to this document. The following is from the current Street Lighting Manual for the City of Glendale.

15.7.5.1 Design Guideline

A. The purpose of the City of Glendale Street Lighting Manual is to establish standards for the design and installation of street lighting in the City of Glendale in order to provide adequate and uniform lighting of streets and other travel-ways.

B. The designer should become familiar with these procedures in order to expedite approval of plans. Any questions concerning street lighting may be addressed by calling the Transportation Department, Streetlight Management at 930-2940.

C. The City of Glendale is serviced by two electric utility companies; Arizona Public Service and Salt River Project. The designer should be aware that different standards and specifications exist in each service area.

D. The Cobra Head fixture is the standard fixture to be used on all LRT related street lighting projects. These fixtures shall be mounted on 32 foot poles with 100 foot staggered spacing producing 30000 Lumens.

E. It is the responsibility of the professional engineer, designing the streetlight system, to coordinate with the electric utility company supplying the power for trench and transformer locations.

F. The layout and design shall include existing and possible future streetlight location information for all streets adjacent to and across from the proposed development.

G. Special effort shall be made during the design stage to assure that one (1) or more streetlights are located at each intersection. All cul-de-sacs shall have at least one (1) streetlight.

H. Pole spacing shall result in a luminance rating that is within the IES RP-8 guidelines, using a light loss factor of .76 (HPS).

I. Wire and conduit sizes shall be in accordance with the needs of the circuit except conduit smaller than two and a half (2 ½") inch shall not be used from pull box to pull box. Conduit smaller than one (1) inch shall not be used from pull box to the pole. Wire shall be sized according to the requirements of the utility company supplying electrical service to the streetlight fixture.

J. APS Streetlight poles shall be wired for 120 volt, for up to and including 100 watt fixtures. Fixtures over 100 watts are to be wired 240 volt. APS can provide 277 volt on some commercial projects. It is the contractor's responsibility to contact APS for the correct voltage to be supplied. Wiring for fixtures shall be installed per Arizona Public Service requirements. Wiring color for power shall be properly identified. Conductors are to be installed from ballast of luminaire to J-box. Wiring between underground junction boxes, shall be provided and installed by the utility company supplying power. APS will make the connection in the J-box.

K. SRP Streetlight poles shall be wired for 120 volt. Wiring from the transformer to the pole's flush mounted J-box shall consist of either 1-#6AI XLPE TX or 1-#4/OAL XLPE TX. Wiring from the J-box to the base of the pole or the pole's hand hole shall consist of 2-#6 AI XLPE and 1-#6 bare solid copper (bond). Wiring shall consist of 2-#12 single conductor and 1-#12 single conductor (bond) type XHHW or THWN pulled from the pole's hand hole or the base of the pole to the luminaire. Wire color for power shall be properly identified. Wiring between underground junction boxes, shall be provided and installed by the utility company supplying power. Connections in the J-box will be made by SRP.

L. Conduit shall be installed at the depth specified on the plans. Conduit shall be per the utility company requirement. Each conduit shall terminate in each pull box and/or pole foundation. Elbows shall be the same size as the conduit.

M. All conduit which will not have circuit wire or cable pulled into it during construction shall have a #10 AWG. copper clad or aluminum clad pull wire installed in it and the ends sealed in a NEC approved manner to keep all moisture and foreign matter out of the conduit.

N. When required, the contractor shall encase conduits in concrete at street, railroad, and driveway crossings.

O. Each pole foundation shall have a 8' X 5/8" copper clad ground rod, driven outside the area excavated for the pole. Ground rods maybe located in the J-box when required by the utility company. A #6 bare copper lead shall be used between the ground rod and the landing lug.

P. Junction boxes are furnished by the contractor.

Q. Excavation for junction boxes and material specifications shall be per the utility company standards.

R. Trench shall be installed per the utility company standards.

S. The use of a common electric utility company trench is permitted. It is the contractor's responsibility to contact the utility company for coordination of trench and the installation of conduit.

T. It is the electrical contractor's responsibility to provide the City inspector with the appropriate list(s) of completed streetlight locations for which power is requested. Streetlight poles shall be numbered according to the numbering system provided by the electric utility company.

U. The underground trenching shall include PVC conduit in accordance with the electric utility company standards. The City of Glendale may require the developer to encase conduits in concrete under driveways or other vehicular traffic areas.

V. Exposed conduit and conduit on structures shall be rigid metal.

W. A photo control shall be mounted on each luminaire.

X. Arterial streets with no sidewalk will have a six (6) foot clearance from back of curb to the light pole. If a sidewalk is planned, light poles will be one (1) foot back of walk. Collector and residential streets will have a three (3) foot minimum clearance from back of curb. All poles installed on arterial streets shall be installed on a concrete foundation. Poles in residential areas shall be embedded.

Y. It is the contractor's responsibility to restore all property, landscaping, paving and driveways that are disturbed during streetlight construction to their original condition in conformance with Maricopa Association of Governments Specifications, Section 107.9.

Z. Design Procedure Checklist

1. Obtain copy of Street Lighting Manual.
2. Retain professional engineer of appropriate discipline.

   For plan preparation per Street Light Manual
3. Engineer prepares street light plans.

   Scale to be 1"=100'
4. Plans submitted for first review.

   Submit to Development Services Center
5. Approved plans submitted for distribution.

   Distribution per schedule stated in policy
6. Electrical contractor obtains permits

   Right of way & building
7. Electrical contractor installs street lights.
8. Electrical contractor calls for inspection 48 hours in advance.

   By Street Light Management
9. City authorizes utility company to energize lighting.

   By Street Light Management
10. Contractor warranty material and workmanship.

    For one year from date of acceptance

15.7.5.2 General Requirements

A. METRO LRT projects shall retain a professional engineer of the appropriate discipline, registered in the State of Arizona, to prepare the lighting system design and appropriate calculations relative to illumination levels. Illumination design shall follow the recommendation of the American National Standard Practice for Roadway Lighting, Illuminating Engineering Society of North America (IES), IES RP-8. The luminance criteria, with light loss factors of .76 (HPS), shall be used to determine conformity with IES and city street lighting design guidelines.

B. All installations shall be in accordance with the National Electrical Code (NEC) and the National Electrical Safety Code (NESC) and shall also conform to the City of Glendale laws and codes governing such work.

C. Street lighting plans shall be submitted at the service counter at the Development Services Center (second floor, Municipal Building) or by mail/carrier addressed to:

   City of Glendale Development Services Center 5850 West Glendale Avenue Glendale, Arizona 85301

D. Six (6) sets of plans, specifications and electrical engineering requirements shall be submitted for the first review.

E. Once final review has been completed, six (6) sets of plans, specifications, material quantities and product literature shall be submitted for approval.

F. Design conflicts shall be resolved by the electrical designer to the satisfaction of the electrical utility company. It shall be electrical designer's responsibility to coordinate conflicts with all electric utility company equipment without compromise to the uniformity in the lighting design.

15.7.6 SRP General Notes

A. The following SRP plan notes are to be part of the notes listed on the plan for SRP related projects per each city's requirements. Verify with each city's design manual for specific requirements for SRP. Street light design located in SRP jurisdictions must comply with all SRP design guidelines as well as what each city requires for SRP coordination with street lighting design.

   1. Contractor shall call SRP for pre-construction meeting prior to any excavation at (602) 236-6300.

   2. Contractor to supply all trench and conduit if requested by COP Project Manager.

   3. Contractor to stake streetlights per City of Phoenix approved street lighting construction drawings.

   4. Grade stake to be set within two (2) feet of J-box location.

   5. Contractor shall coordinate with SRP and City of Phoenix for de-energizing of street light conductor.

   6. Ground rod to be provided and installed by Contractor in SRP J-box at each street light location.

   7. #6 bare copper ground wire to be attached from grounding lug on street light pole to ground rod in J-box.

   8. If the Contractor installs the pole, the bare #6 copper ground wire shall be connected from the ground rod in the SRP J-box to the ground connection in the pole hand-hole.

   9. All trench and conduit to be inspected by SRP. Do not backfill until inspected.

10. SRP construction print must be used as a trenching reference. Trenching variations must have written SRP designer approval. Follow details for construction. Variations in trench route may result in a redesign fee.

11. Trench should be straight, level and free of debris. All trench depths measured from final grade to top of conduit (per SRP design) within all easements and right of way. Maintain minimum 18" clearance from all gas lines, 12" clearance from other utilities.

12. Use DB120 PVC for all straight conduit, 36"radius schedule 40 PVC sweeps for all elbows. Absolutely no reducers allowed in conduit system, no couplings or bell ends at equipment locations. All conduits within road Right of Way or PUE must be red.

13. Retaining walls will be required adjacent to equipment where the grade slope is greater than 30" in 12'.

14. All conduit stub outs to be capped and marked with electronic marker and 7" red flag marking ribbon.

15. Hard caps to be used for all stub outs below grade.

16. A mandrel inspection is required with SRP Inspector within 3 days of final inspection. Contractor must provide 2 representatives, minimum 125-CFM trailer mounted compressor and all necessary attachments.

17. The Contractor is responsible for the integrity of all conduits until SRP has installed conductors.

18. Backfill requirements for trench in or under future pavement to be 1 sack slurry mix, in road right of way in dirt to be ½ slurry mix and ½ slurry mix maximum under all SRP equipment.

19. See duct bank specifications for all duct bank encasement requirements.

15.7.7 Arizona Public Service (APS) Notes

A. The following is the utility submittal process if street lights reside within APS jurisdiction. Street light design located in APS jurisdiction must comply with all APS design guidelines. Verify with each city's design manual for specific requirements for SRP. Street light design located in APS jurisdictions must comply with all APS design guidelines as well as what each city requires for APS coordination with street lighting design.

Step 1 – Streetlighting consultant prepares streetlight location plans, list of stations with proposed offsets and photometric analysis if requested, to be included with 70% design plans.

Step 2 – Streetlight location plans and list of stations and proposed offsets are submitted (hard copy and electronically) to DCM Project Manager.

Step 3 – DCM Project Manager places the electronic files for 70% design plans with streetlight locations and list of stations and proposed offsets, on the U: Drive with proper nomenclature and notifies streetlight section.

Step 4 – First review (14 days); Streetlight location plans and list of stations and proposed offsets are reviewed by streetlight section. Plans and comments are returned to DCM-Project Manager to be forwarded to streetlight consultant.

Step 5 – Second Review (10 days), if necessary; Plans, stations and proposed offsets and comments are reviewed and returned to DCM-Project Manager and from PM to consultant

Step 6 – STD streetlight section sends letter of authorization (LOA), stamped approved streetlight location plans and stamped approved list of stations and proposed offsets to the appropriate utility company for streetlight design. Utility design will include approved streetlight locations, trench, conduit; j-boxes and /or overhead service. Consultant is copied on letter of authorization and coordinates with utility on streetlight / electrical service design

Step 7 – Utility company sends the circuit design and streetlight location plans to Engineering and Architectural Services (EAS) for utility review

Step 8 – EAS reviews and approves the utility company's circuit design for permitting

Step 9 – EAS sends street light permit(s) showing the streetlight locations, to street light section for review, signature and return to EAS

Step 10 – EAS sends street light permit to utility company construction department

Step 11 – Utility company or their contractor completes work

Step 12 – DCM – Project Manager informs street lighting section on completion of work or conflicts (proposed)

Chapter 16.0

Traffic Control

16.0 TRAFFIC CONTROL

16.1 General

The purpose of this chapter is to establish the traffic engineering standards and design criteria for the METRO LRT project. The standards and criteria relate to the design of traffic signal systems, signing, and pavement markings as they apply to the interface of the LRT guideway and train operations with the street and highway system.

16.2 Applicable Standards

Traffic vehicle and pedestrian signals, signs, and pavement markings shall be in accordance with the practices of the city and local jurisdictions in which the system will be constructed, the Manual on Uniform Traffic Control Devices for Streets and Highways (MUTCD) published by the U.S. Department of Transportation, the Arizona Supplement to the MUTCD, and Arizona Department of Transportation (ADOT) standards. Materials and equipment used in each installation and/or modification of traffic signal systems, signing, and pavement markings shall conform to the latest specifications in the standards of the street authority having jurisdiction at the location of the installation and as noted here.

16.3 General Design Criteria

Where LRT trains will operate along public streets, the guideway will be located in reserved lanes separated from those serving general traffic. The width of these lanes must equal or exceed the width of the dynamic clearance envelope of the trains.

The separation should be accomplished by barrier curbs and/or other approved means that will physically deter vehicles traveling in parallel lanes from encroaching into the guideway. Where the roadway adjacent to the guideway comprises only a single lane with a width of less than 18 feet, there should be provision for vehicles to bypass an obstruction in the travel lane. Mountable curbing should be used for separation to allow encroachment into the guideway for that purpose.

Raised pavement markings or buttons may be substituted where conventional curbing is not practical.

Whatever type of delineation is used, it must be installed entirely outside the dynamic envelope for the LRT vehicles. The delineated guideway should include the passenger station platforms and any refuge zones that may be needed to accommodate pedestrians crossing the tracks.

16.4 Locations of Train Interface with Traffic

Traffic movements across the LRT tracks shall be restricted to existing signalized intersections wherever possible. At existing signalized intersections that are to be modified to include an LRT guideway crossing, the signalization shall be revised as necessary to provide time separation of LRT movements from all conflicting vehicular and pedestrian movements.

New guideway crossings at intersections with public streets that are not currently signalized may be considered if one or more of the following criteria are satisfied:

- The conditions at the intersection location satisfy one or more of the MUTCD traffic signal warrants.
- Denial of a particular movement across the guideway would result in unreasonable additional travel distance.
- The diverted movements cannot be accommodated safely at other crossing locations.
- An intersection upon which the diverted traffic would be imposed does not have sufficient capacity to accommodate it.

Where the criteria warrant consideration of a new guideway crossing, a site-specific study of the impact of the crossing shall be conducted. These studies may include review of traffic volumes, circulation patterns, traffic signal spacing, and capacity of adjacent signalized intersections. At intersections where traffic movements across the guideway are to be permitted, traffic signals or other appropriate positive control devices shall be provided to control conflicts (see Section 16.5).

At intersections with public streets where traffic movements across the median would be prohibited, they would be diverted to other locations. Site-specific studies of the impact of those diversions shall be conducted. The studies should include re-assignment of the diverted volumes to signalized locations where U-turns can be accommodated, followed by analyses of the traffic operations and related roadway geometry modifications at those locations. If these analyses determine that the resulting volume of turning movements cannot be accommodated without excessive delay and spillback of queues into through lanes, and that there are no reasonable alternative routes for the diverted traffic, traffic movements across the trackway may then be allowed as an exception. In that eventuality, traffic signals or other active devices shall be installed to control the conflicts of vehicle and LRT movements.

Vehicle turning movements across the LRT tracks into and out of private driveways shall be prohibited. Consideration of exceptions that would allow new median openings for access to/from private driveways shall be based on the findings of site-specific studies, which may include review of traffic volumes, circulation patterns, and land use. The site-specific studies shall be the same as conducted for the non-signalized intersections with public streets but shall also include consideration of the type and intensity of the land use served by the private driveway and the number of vehicle trips generated by the land use. At locations where movements must be allowed, traffic signals and/or other appropriate active devices shall be provided to control conflicting movements.

16.5 Control of Train Interface with Traffic

All intersection crossings of the guideway shall be controlled by active devices that will temporarily separate LRT train movements from conflicting vehicular and pedestrian movements. Control by positive devices are necessary to assure the safe and efficient operation of the LRT and street system and that the LRT system is in compliance with the MUTCD.

Crossings that are integral with adjacent railroad trackage shall be controlled with flashing lights and automatic gates in conformance with MUTCD Parts 8 and 10. Other types of crossings may be equipped with this type of control if such is supported by an engineering study.

At guideway crossings of public streets not equipped with railroad-type flashing lights and automatic gates and at street intersections that include an LRT guideway, standard highway-type traffic signals should be used to control vehicular and pedestrian traffic. These signals shall be designed and installed in accordance with the MUTCD and standards of the city having jurisdiction over the roadways at the location of the installation. The signals shall be controlled through use of predictive priority, where agreed to by METRO in the intergovernmental agreement. Predictive priority is defined as a traffic signal system that has the ability to accept advance detection of approaching light rail vehicles with tracking confirmation of the vehicles at each upstream intersection.

Blank-out turn prohibition signs are internally illuminated signs showing a symbol and/or word message. These blank-out signs may be used in concert with movable barrier arms or as a primary control at non-intersection crossings, such as driveways and alleys, that cannot be eliminated and for which traffic signal control is unsuitable. Blank-out signs may also be used as a supplemental control device at signalized intersections to control low-speed vehicle turning movements.

The design and placement of all devices controlling general traffic shall conform to the MUTCD and must be approved by the city having jurisdiction. Highway-light rail transit grade crossings in semiexclusive alignments shall be equipped with a combination of automatic gates and flashing-light signals, or flashing- light signals only, or traffic control signals, unless an engineering study indicates that the use of STOP, YIELD, or advance warning signs alone would be adequate. Highway-light rail transit grade crossings in mixed-use alignments may be equipped with traffic control signals unless an engineering study indicates that the use of STOP, YIELD, or advance warning signs alone would be adequate.

Coordination shall be undertaken by the Design Consultant and the agencies responsible for operating and maintaining the roadway and traffic signals at each affected intersection or crossing to determine the type, location, phasing, and timing of the signals; the methods of detecting vehicles, pedestrians and LRT trains; and also of interfacing the control at each location with existing traffic signal systems.

In situations where LRT trains operate on a priority basis through a signalized street intersection in conjunction with emergency vehicle pre-emption, the priority shall be based on a first come, first served basis. This should allow LRT vehicles to stop short of an intersection or to clear intersections making way for emergency vehicles.

At each intersection through which the trains will operate, special signals shall be provided to control their movement. They shall be designed to display indications that are distinctive in themselves and do not resemble those displayed by conventional traffic signals. To achieve this, the indications shall be conveyed by illuminated elongated rectangles or bars, all of which shall be lunar or incandescent white in color. No other colors are permitted. The illumination shall be steady and may be provided by light emitting diode (LED) technology or lamps. The "Stop" indication (equivalent of a red vehicular signal) shall be conveyed by a rectangular bar in a horizontal position. The "Proceed" indication, (equivalent of a vehicular green signal) shall be conveyed by a rectangular bar in a vertical position. The "Prepare to Stop" indication (equivalent of a vehicular yellow signal) shall be conveyed by a rectangular bar in a diagonal position with the left end low.

Where pedestrians must cross LRT tracks, appropriate control devices shall be provided. Where a pedestrian crossing is part of a signalized street intersection, control shall be provided by means of standard vehicle and pedestrian traffic signals. The traffic signals should be timed to allow pedestrians sufficient time to cross the entire street in a single phase. At locations other than signalized street intersections, where justified by a site-specific engineering study, these devices may be supplanted or supplemented by passive signs, active signs, pavement markings/textures, flashing beacons, channeling devices, automatic gates, or any combination thereof. Passengers using walkways across the trackway within stations should be regulated by passive measures unless an engineering study indicates that other measures are necessary.

Where pedestrians cross a trackway that is located in the median of a street or highway, a refuge zone shall be provided within the median, but outside the dynamic clearance envelope of the LRT trains. Pedestrian prohibition signing may be required at locations where it is not safe or crossings are not accessible.

16.6 Sign Design

Signing regulating vehicle and pedestrian traffic at interface with the LRT guideway shall be installed in accordance with the MUTCD, standards of the city having jurisdiction at the location of the installation, and ADOT standards. In situations where sign requirements are not addressed by these standards, special signing shall be developed by the Design Consultant in coordination with the city having jurisdiction over the roadway. The Design Consultant should work with all the agencies involved in the project and strive to incorporate uniform special signing applications.

16.7 Pavement Marking Design

Pavement markings related to the LRT operation shall be installed in accordance with the MUTCD, standards of the city having jurisdiction at the location of the installation, and ADOT standards. If an engineering study determines that special markings should be installed to delineate the dynamic clearance envelope of the LRT trains, those markings shall conform, as is practical, to the MUTCD. In situations where marking requirements are not addressed by these standards, appropriate designs shall be developed by the Design Consultant in coordination with the city having jurisdiction. The Design Consultant should work with all the agencies involved in the project and strive to incorporate uniform special pavement marking applications.

16.8 General Operations

Where LRT trains operate in general traffic lanes or adjacent thereto without an intervening barrier or curb, they shall travel no faster than the parallel roadway speed limit.

At signalized intersections and at crossings not controlled by automatic gates, LRT cars shall approach at speeds that permit them to stop short of the point of conflict if the guideway is already occupied.

At crossings controlled by flashing signals and automatic gates, a raised median shall be installed on each approach of a two-way street. This median should extend from the crossing to a point nominally 100 feet upstream.

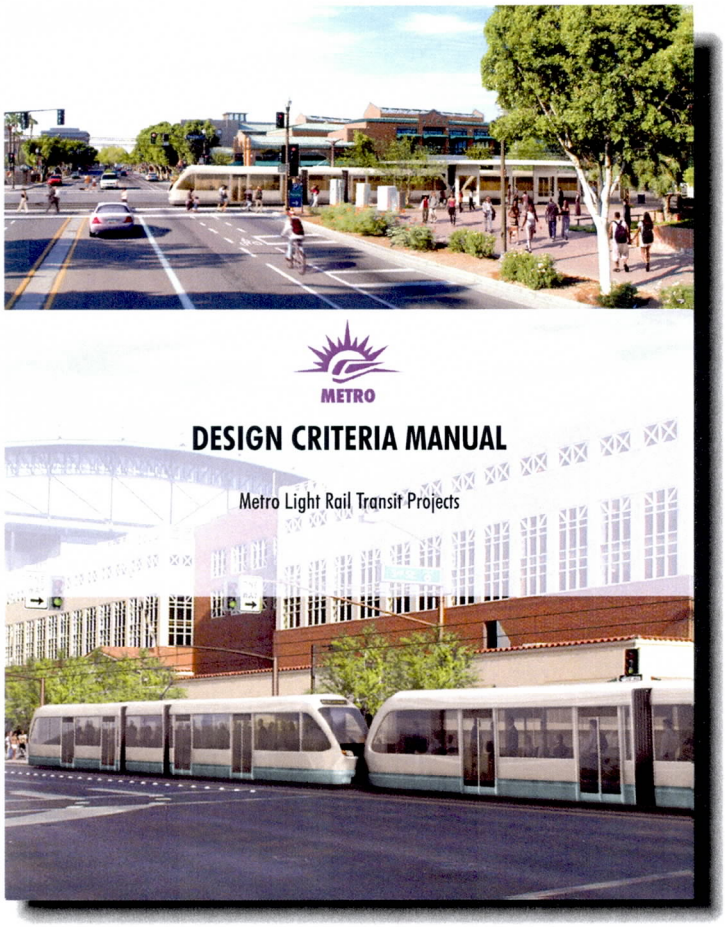

Chapter 17.0

Safety

17.0 SAFETY

17.1 Introduction

The purpose of this chapter is to establish the standards and design policies for the design, construction, and commissioning of the system's safety elements on the METRO LRT Project. To ensure safety of the system and to mitigate hazards on the project the designer and contractors shall comply with METRO's System Safety Program Plan (SSPP) (Revision 3, April 2006), System Security Program Plan (SSecPP) (Revision 3, March 2006), Emergency Management Plan (EMP) (Revision 1, March 2006), and Safety and Security Certification Plan (SSCP) (June 28, 2004). When these safety and security documents are revised, the designer and contractors shall review the revised documents, determine if any revisions in the design are necessary due to the revised document, and request direction from METRO whether to implement the changes or not.

17.2 System Safety Program

The System Safety Program's goal is to provide transit system facilities and operations that minimize hazards to the employees, patrons, contractors, first responders, and the general public that operate, maintain, construct, use or are in the vicinity of transit operations.

To accommodate this goal, engineering designs shall be reviewed to determine if hazards have been identified and eliminated, and minimized or controlled to an appropriate level throughout the intended service life. Engineering designs must satisfy System Safety Criteria requirements applicable to the individual systems and elements.

A vital part of the System Safety Program is the System Safety Program Plan (SSPP) that has been developed and adopted by METRO. The SSPP is a document that, as a minimum, must comply with the State Safety Oversight (SSO) Agency's System Safety Program Standard (SSPS) for Rail Fixed Guideway Systems. The SSO Agency responsible for oversight of the METRO LRT system is the Arizona Department of Transportation (ADOT), and its current SSPS is dated March 2005.

17.2.1 System Safety Criteria

These criteria for systems, fixed facilities, structural designs, and subsequent operational procedures shall ensure that the system safety goals are implemented through all aspects of design development, construction, implementation, test, operations, and maintenance. The System Safety analyses shall be performed according to MIL 882 standards.

Some general system safety design requirements are:

1) Potential or actual hazards that have been identified through analyses shall be eliminated, avoided, reduced or controlled in accordance with the following order of safety precedence:
   a. Design to eliminate hazard (design selection, material selection or substitution).
   b. Design to control hazard.
   c. Provide safety devices.
   d. Provide warning devices.
   e. Control with special procedures and training.
   f. Conditionally accept remaining residual risks.

2) Qualitative and quantitative analyses shall be performed, documented and furnished as part of the design process to ensure adequate consideration of safety. As a minimum, a Preliminary Hazard Analysis (PHA) shall be conducted for the project. Other detailed analyses including a Sub-system Hazard Analysis (SSHA), a System Hazard Analysis (SHA), and an Operating and Support Hazard Analysis (O&SHA) shall also be conducted as required.

3) As the designer develops and completes the Hazards Analysis, he/she shall maintain a safety Certifiable Items List (CIL). This list shall be used as the basis to develop design modifications and operating and maintenance procedures to eliminate or control the hazards.

4) Safety information and procedures shall be developed for inclusion in instructions and publications. These shall include, but not be limited to, normal and emergency operations.

5) Minimize exposure of personnel operating, maintaining, or repairing equipment to hazards such as entrapment, chemical burns, electrical shock, cutting edges, sharp points, electromagnetic radiation, or toxic atmospheres.

6) Emergency equipment/devises for public use shall be clearly identified and accessible. Interlocks, cutouts, fittings, etc., shall be accessible through access panels, which shall be secured to prevent tampering and vandalism.

7) Where failures could result in personal injury, major system damage, or inadvertent operation of safety critical equipment, redundancy or fail-safe principles shall be incorporated into the design.

8) Physical and functional interfaces between subsystems shall be analyzed. Those hazards associated with interfaces shall be specifically identified as system integration hazards and tracked for effective resolution.

9) There shall be no single-point failures in the system that can result in an unacceptable or undesirable hazard condition.

10) If one failure combined with a second failure can cause an unacceptable or undesirable hazard condition, the first failure shall be detected, and the system shall achieve a known safe state before the second failure can occur.

11) All safety critical elements in a vital system shall be designed and implemented with fail-safe principles. Fail-safe principles shall be realized by designing the system to have intrinsically safe failure characteristics or by designing the system with verifiable techniques that detect potentially unsafe failures and ensure that the system reverts to a known safe state.

    a) The following criteria shall be used, as a minimum, for implementing fail-safe functions and vital circuits:

        - Component failures or loss of input signals shall not cause unsafe consequences and shall not, when added to other failures, cause unsafe consequences.

        - Any number of simultaneous component failures attributable to the same cause or related causes shall not result in an unsafe condition.

    b) The following criteria shall apply to electrical/electronic circuits:

        - Broken wires, damaged or dirty contacts, relays failing to respond when energized, or loss of power shall not result in an unsafe condition.

        - The relays used in vital circuits shall conform to all applicable parts of the AREMA Communications and Signals Manual of Recommended Practice, Section 6, Relays.

- Circuitry components shall be considered able to fail in either the open or shorted condition. It shall be assumed that multi-terminal devices can fail with any combination of opens, shorts, or partial shorts between terminals. Protection shall be provided in the event that any amplifier is subject to spurious oscillations at any frequency.

12) Where redundancy is used in a safety critical area, there shall be no single point of failure that would result in the loss of safety protection. Redundant paths shall not contain a common predominant failure mode.

13) Design shall include component interlocks wherever an out-of-sequence operation can cause a hazard.

14) Suitable warning and caution notes in operating, assembly, maintenance and repair instructions, and distinctive markings on hazardous components, equipment, or facilities for personal protection, shall be provided.

15) Color-coding used for equipment and facilities shall be uniform.

16) Each design shall be evaluated for hazards to identify basic deficiencies, inherent hazards of operation, safety critical malfunctions, maintenance hazards, human factors deficiencies, environmental hazards procedural deficiencies, and for compliance with codes, standards, and regulations. Written documentation of this evaluation shall be provided at the time final design is accepted.

17) The safety system analysis shall include review of fixed facilities and structures for employee access and maintenance safety.

18) Maintenance activities required to preserve or achieve risk levels shall be prescribed to the System Safety Manager during the design phase. These maintenance activities shall be minimized in both frequency and in complexity of their implementation. The personnel qualifications required to adequately implement these activities shall also be identified.

19) Software faults shall not cause an unacceptable or undesirable hazard condition.

20) Unacceptable hazards shall be eliminated by design.

21) Hazardous substances, components and operations shall be isolated from other activities, areas, personnel and incompatible materials.

22) Risk resulting from excessive environmental conditions (e.g. temperature, pressure, noise, toxicity, acceleration, and vibration) shall be minimized.

17.2.2 System Safety Program Plan

17.2.2.1. Purpose, Goal, Objectives

The purpose of the System Safety Program Plan (SSPP) is to establish requirements for identification, evaluation and minimization of safety risks throughout all phases of the METRO LRT Project. Requirements are defined in the following areas:

- Implementation of established safety criteria;
- Processes for identification and assessment of safety hazards early in the design phase; and
- Methods to eliminate minimize or control the identification of critical and catastrophic hazards.

The goal of the SSPP is to provide a level of safety compliant with all applicable codes, guidelines, regulations and standards; and to establish a safety philosophy that emphasizes preventive measures to eliminate unsafe conditions.

The objectives of the SSPP are to identify design and management controls, plans and processes to:

- Perform all necessary safety analyses to identify and assess safety hazards;
- Analyze historical data from other similar light rail systems;
- Develop and implement a safety certification program to document that safety requirements are incorporated into the design of the METRO LRT Project, safety items have been properly installed in the field, materials have been provided to train METRO LRT operations personnel, and integrated tests and emergency drills have been conducted to ensure that all systems and equipment function as designed;
- Develop document controls that attest to safety throughout the design, construction, procurement and testing of the METRO LRT Project; and
- Coordinate safety initiatives with quality, reliability and maintainability activities.

17.2.2.2. Codes and Standards

Detailed codes and standards references are included in each of the system sub-components in the respective chapters of the Design Criteria Manual (DCM). General references to safety specific criteria are included in this Safety section of the DCM.

The following documents were used as guidance or reference for the SSPP.

- *Compliance Guidelines for States with New Starts Projects, DOT-FTA-MA-5006-00-1*, U.S. Department of Transportation, Federal Transit Administration, June 2000.
- *Manual for the Development of Rail Transit System Safety Program Plans.* American Public *Transit Association, September 1991.*
- MIL-STD 882D, *System Safety Program Requirements*, U.S. Department of Defense, January 19, 1993.
- FTA Regulations, 49CFR, Part 659, *Rail Fixed Guideway Systems; State Safety Oversight*, U.S. Department of Transportation Federal Transit Administration, April 29, 2005.
- *Handbook for Transit Safety and Security Certification,* DOT-FTA-MA-90-5006-02-01, U.S. Department of Transportation Federal Transit Administration, November 2002.
- *Hazard Analysis Guidelines for Transit Project*, DOT-FTA-MA-26-5005-00-01, U.S. Department of Transportation Federal Transit Administration, January 2000.

In addition to the documents listed above, the design shall be in accordance with the following standards. If the standards requirements conflict, the most stringent requirement shall apply.

- Standards for Rail Fixed Guideway Systems, CCR 723-14.
- National Fire Protection Association (NFPA) – 1, 2, 10, 13, 14, 70, 72, 90A, 101, 130

- Federal Occupational Safety and Health Administration (OSHA) Standards

  (General Industry), 29 CFR 1910

  (Construction Industry), 29 CFR 1926

- Uniform Building Code (UBC) and/or International Building Code (IBC) as applicable, supplemented by local municipal code amendments.
- Uniform Fire Code (UFC) and/or International Fire Code (IFC), supplemented by local municipal code amendments.

The following regulations and guidelines shall be considered in the design of the METRO LRT Project, where applicable:

- Federal Railroad Administration - 49CFR 51, 201, 202, 205, 207, 209, 211, 213, and 241.
- *Integration of Light Rail Transit Into City Streets* – Transit Cooperative Research Program (TCRP) Report 17.
- American Public Transit Association (APTA) *Guidelines for the Design of Rapid Transit Facilities.*

17.3 Project Safety Organization

17.3.1 Fire/Life Safety and Security Committee

The purpose of the Fire/Life Safety and Security Committee (FLSSC) is to serve as a liaison between the METRO LRT Project Team, fire and police jurisdictions, and emergency response agencies. The FLSSC is composed of representatives from local fire and police jurisdictions, local emergency response agencies, and METRO LRT Project Team system safety and security, engineering and construction management staff.

17.3.2 Safety and Security Certification Review Committee

The Safety and Security Certification Review Committee (SSCRC) is responsible for assessing hazards and overseeing compliance with the Safety Certification Program. The SSCRC is responsible for:

- Reviewing documentation (evidence of conformance or compliance to safety requirements), assigning responsibilities for open safety issues and approval of certification documentation, conducting site visits and defining safety-related tests and analyses, as required;
- Defining the specific method to mitigate the conditions or potential hazard; and
- Determining whether to accept specific conditions or require corrective action, including providing recommendations to the designers regarding certification and noncompliance of system elements.

The SSCRC is composed of senior management personnel, or designees, who represent the following areas: systems engineering, facilities engineering, station design, safety and security, operations, the General Engineering Consultant (GEC), and the Construction Administration Consultant (CAC).

17.4 Hazard Identification, Analysis And Resolution

Hazard identification, analysis and resolution is the formal process to identify, evaluate and mitigate hazards associated with the design, construction, testing, startup and operation of the METRO LRT that have the potential to result in death, severe injury, multiple injury, system loss, major system damage, or major environmental impact. All known hazards identified are categorized by severity and probability of occurrence, analyzed for potential impact and resolved by design, procedures, warning devices or other methods so that they fall within the prescribed level of risk acceptable to the METRO LRT Project Team. A Hazard Identification, Analysis and Resolution Plan shall be developed and implemented for the METRO LRT Project. Designers shall prepare and update a Safety Open Items List (SOIL), which identifies Category I and II hazards. For more information regarding the Hazard Management Process see SSPP Section 7.0.

17.5 Construction Safety

Construction contractors working on the METRO LRT Project shall prepare a Construction Safety Plan, which emphasizes prevention of injuries to persons and damage to property and equipment during construction activities for the METRO LRT Project. These Plans shall be approved by the Resident Engineer of the LRT Project Team, and reviewed by the CAC Construction Safety Manager, METRO Chief of Safety and Security, and the SSCRC, and shall be periodically audited. See SSPP Section 22 for additional information.

17.6 Safety and Security Certification Program

A major activity required under the SSPP is the implementation of a Safety and Security Certification Program for design and construction projects. Safety Certification Program is a process developed to verify, by documentation, that safety requirements are incorporated in design, construction, procurement activities, training, and operations of rail transit systems. The goal is to develop objective evidence that an optimized level of safety and security for patrons, employees, first responders, and the public has been achieved and incorporated into the new system. For more information on the Safety and Security Certification Program see SSPP Section 15.0.

A Safety and Security Certification Plan (SSCP) dated June 28, 2004 has been prepared for the Central Phoenix East Valley (CP/EV) LRT project. A similar SSCP, tailored to the specific project, shall be developed for each future rail line or extension. The designer or contractor responsible shall implement its portion of the SSCP. Designer/Contractor-provided documentation shall be reviewed by the GEC, and CAC, and reviewed and approved by the SSCRC.

The SSCP verifies that all certifiable safety items are satisfactorily completed prior to revenue service to ensure a safe and secure METRO LRT system. Furthermore, the SSCP shall provide a documented basis for loss control, risk management, and the reduction/elimination of liability exposure to METRO.

The SSCP consists of a three-part verification document for each element of the system. The first part details the system/element safety requirement. The second part affirms that the design complies with the safety requirement. The third part verifies and acknowledges that the system/element was constructed/installed as designed.

The SSCP objectives are to ensure that the following safety and security requirements have been satisfied:

- Facilities and equipment have been designed, constructed, installed, inspected and tested in accordance with applicable codes, standards, criteria, and specifications.
- Procedures, rules, operating and maintenance manuals and other documentation have been adequately developed.
- Operations and Maintenance personnel have been trained and are certified to perform their respective functions.
- Emergency response agencies have been adequately prepared and drilled to respond to emergency situations on the system.
- Identified hazards have been eliminated or controlled to acceptable levels.

The SSCP shall define the implementation of the Safety Certification Program. Key activities of the SSCP include:

- Identify and document the safety and security Certifiable Items Lists (CIL) of the project;
- Specify and apply safety and security requirements to these certifiable items into the design criteria, design manuals, contract specifications, and safety and security analysis;
- Implement a program of hazard and vulnerability analysis and tracking;
- Implement a systematic review program to verify safety and security requirements are included in plans, specifications and drawings, test plans, procedures, and operational assessments;
- Implement a dedicated testing and evaluation program to verify that safety and security certifiable items comply with the contract specifications, and that an acceptable level of operational readiness and emergency preparedness exists, and that tests are conducted to verify the ability of the systems and equipment to function safely as designed;
- Verify all plans, procedures, maintenance manuals and training programs are developed and implemented prior to the start of revenue service;
- Responsible METRO LRT Project Team personnel verify that the certifiable items are completed. Issue written Certificates of Compliance (COC) for each certifiable item, indicating that it meets established safety and security requirements;
- METRO Chief, Safety and Security shall prepare and issue a Draft and Final Safety and Security Certification/Verification Report, verifying the project's readiness for safe and secure service prior to commencement of revenue service.
- CEO shall issue a Safety Certification Statement to the FTA, ADOT, and METRO's Board of Directors.

17.7 Detailed Safety Criteria

Detailed safety related criteria for various subsystems of the METRO Project are covered in the applicable section of this Design Criteria Manual. References to several of these items are provided below to assist the designer.

Sections 3.4.4 and 6.8.6 – Fencing and Barriers

Sections 4.7, 7.2.5, 11.12, and 16.0 - Grade Crossings

Sections 6.3.4, 6.8.1, 6.8.7, and 7.2.4 - Emergency Access/Egress, station design, and walkways

Sections 6.4.11 and 12.2.2 - Emergency Call Box

Sections 6.4.12 and 12.2.5 – Video Cameras

Section 6.9.1 – Safety Materials

Sections 7.2.2 and 8.5 – Light Rail Vehicles

Section 7.2 – Operations

Section 10.5.4 – Traction Power

Sections 10.5.5 and 12.6 - Fire Detection and Suppression Monitoring

Sections 10.5.7, 10.7.15, and 15.5 – Grounding

Section 15.6 – Lighting

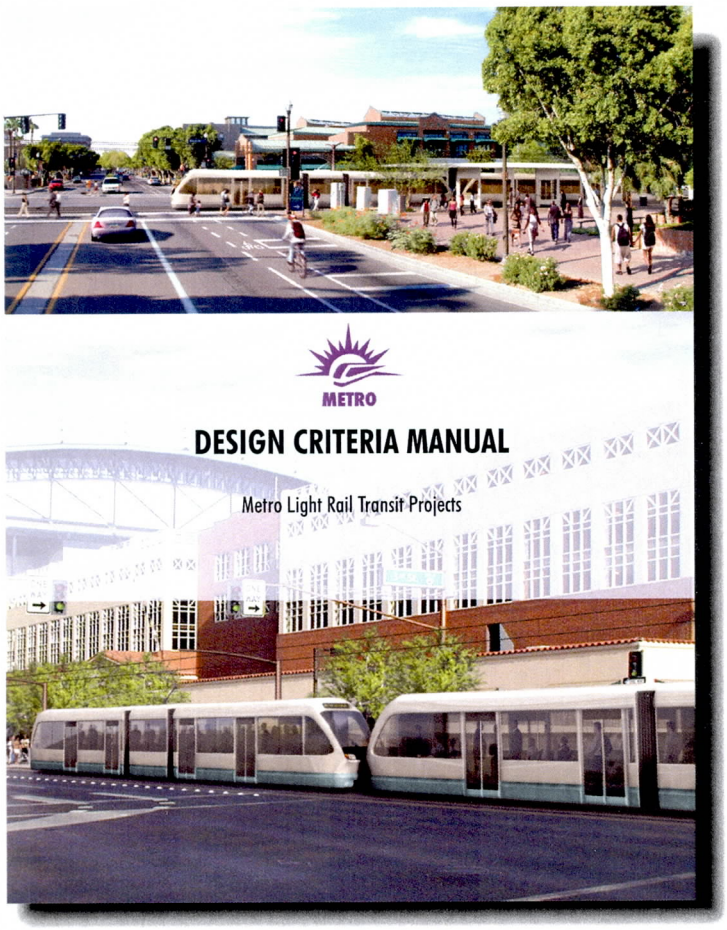

Chapter 18.0

Security

18.0 SECURITY

18.1 Introduction

The purpose of this chapter is to establish the standards and design policies for System Security on the METRO LRT Project. System Security shall be provided by a combination of procedures, subsystems and devices to assure security of passengers, employees, equipment, and facilities. Operating procedures shall be developed to maintain the fullest use of the security systems provided.

As part of this effort, METRO developed a System Security Program Plan (SSecPP) to document security mitigations for the METRO LRT Project. The SSecPP addresses threats, which include: criminal activity, terrorism, natural disasters, and emergency response. The designer shall comply with the METRO SSecPP (Revision 3, March 2006, or later current revision).

The security design shall incorporate the following mitigation strategies as an integral part of the design process of new facilities: defensive layering; Crime Prevention Through Environmental Design (CPTED) principles; target hardening; and physical security system elements. Defensive layering provides multiple levels of security in order to slow or prevent an adversary's access to a site. CPTED strategies include: maximizing visibility of people, parking areas, patron flow areas and building/structure areas; providing adequate lighting and minimizing shadows; graffiti guards, mylar shatter guard protection for glass windows; landscape plantings that maximize visibility; gateway treatments; decorative fencing; perimeter control; minimizing park-n-ride and parking structure access points; elimination of structural hiding places; open lines of sight; and visible stairwells and elevators, meaning the exterior walls are constructed of transparent material. Target hardening employs structural techniques to increase the ability of a building to withstand an explosion while minimizing the loss of life and property damage. Physical security elements are intended to: 1) delay an intruder to allow time to detect them; and 2) inform responders of a penetration of a facility or protected area.

18.2 Passenger Security

Passenger security at stations shall be enhanced by installation of Closed Circuit Television (CCTV) cameras at all stations, in accordance with Chapter 12. Cameras shall be located and aimed to monitor passenger waiting and train boarding areas at the stations. CCTV camera coverage shall encompass ticket vending areas and passenger assistance telephone sites at the stations. Video recording of station activity shall be provided at the Operations Control Center. CCTV cameras and recorders shall be installed on board LRT vehicles. Train borne intercom (passenger to train operator) shall be provided for passengers to notify the operator of any urgent incidents on board the vehicle. The train operator's radio equipment shall incorporate a priority request send feature to notify rail controllers at the Operations Control Center of any incident or event, which requires immediate attention, and should be placed ahead of "routine" radio calls in the system. Chapter 12 identifies channels on the radio network to be used for conference calls between train operators, line supervisors, security personnel, and dispatchers to permit incidents to be handled apart from normal train control radio traffic.

18.3 Employee Security

The LRV Operator shall be provided the capability of activating a "silent alarm". Activation of this alarm shall alert the Operations Control Center of a problem on the train. Each LRV operator cab shall be equipped with the silent alarm, and it shall be conveniently located to the operator while in the normal operating position. The LRV silent alarm shall not cause any indication or warning on board the LRV that the alarm has been activated to OCC.

18.4 Facility Security

To monitor unauthorized entry/intrusion, CCTV cameras shall be provided at the Maintenance and Storage Facility, yard entrances, employee parking areas, Park and Ride parking lots, and storage areas of high value equipment and parts.

Fire and Intrusion alarm systems shall be provided to monitor critical facilities and equipment such as traction power substations, fare collection equipment, and signals and communications equipment as discussed in Chapter 12.

All of the above facilities shall be monitored at the Operations Control Center, except for yard security and fire/intrusion alarms which shall be monitored at the Maintenance and Storage Facility site.

18.5 System Security Program Plan

The METRO LRT Project has established a set of comprehensive security activities emphasizing the importance of security in all aspects of the METRO LRT Project. These activities have been documented in the System Security Program Plan (SSecPP), Revision 3 March 2006. The overall goal of the security program is to optimize the level of security in the planning, design, construction, procurement, testing, startup, and operation phases of the METRO LRT Project. This program shall minimize security breaches as well as establish security, in concert with safety as a number one priority.

18.5.1 Purpose of the System Security Program Plan

The purpose of the System Security Program Plan (SSecPP) is to optimize, within the constraints of time, cost, and operational effectiveness, the level of protection afforded to passengers, employees, contractors, first responders, and other individuals near the METRO LRT system.

The SSecPP was developed to comply with the State Safety Oversight (SSO) Agency's Security Program Standards (SPS) for Rail Fixed Guideway Systems, March 2005. The SSO Agency responsible for VMR is the Arizona Department of Transportation, ADOT. The SSO SPS is required to comply with FTA regulation, 49CFR, Part 659, *Rail Fixed Guideway Systems; State Safety Oversight*, U.S. Department of Transportation Federal Transit Administration, April 29, 2005.

The SSecPP was developed based on guidance provided in the following FTA documents:

- FTA Public Transportation System Security and Emergency Preparedness Planning Guide, DOT-FTA-MA-26-5019-03-01, January 2003.
- FTA Transit Security Handbook, 1998.

18.5.2 Implementing the System Security Program Plan

The primary security goal of the METRO LRT Project is to design the METRO LRT system to incorporate security concepts and technology.

The designers and contractors shall comply with the SSecPP. They shall participate as members of the Proactive Security Committee, Security Breach Review Committee, the Fire/Life Safety and Security Committee (FLSSC), and the Safety and Security Certification Review Committee (SSCRC). For more information on these committees see SSecPP Sections 4.2 and 4.3 and SSPP Section 5.2.6.

In order to achieve the stated security goal, several objectives and their associated tasks have been established. A summary list of the objectives are provided below, and a complete list is provided in SSecPP Section 1.3:

- Security concepts considered in design.
- Personnel realize their security role.
- Develop a Proactive Security Committee
- Develop a Security Breach Review Committee.
- Develop a log for security breaches.
- Develop baseline security statistics and determine goals for improvement.
- Establish liaison with community and law enforcement.
- Maintain a high level of security on construction sites and facilities.

Several of these objectives shall be met by the designers and contractors implementing the Safety and Security Certification Plan (SSCP) as discussed in Chapter 17. A reference used in the development of the SSCP is the *Handbook for Transit Safety and Security Certification*, DOT-FTA-MA-90-5006-02-01, U.S. Department of Transportation Federal Transit Administration, November 2002. Generally, to ensure security concepts are incorporated into the METRO LRT Project, the following tasks shall be conducted: the design criteria shall be reviewed; the designs shall be reviewed; and the construction, procurement, testing, and start-up activities shall be monitored.

Specifically, designers shall:

- Design security into the METRO LRT Project by using such concepts as CPTED and security technology.
- Work with METRO to set security related goals and objectives.
- Incorporate security features into the designs to reduce threats and vulnerabilities, such as: fencing, lighting, guard shacks, security office, gates, sensors or motion detectors, burglar/intrusion alarm systems, Closed Circuit TV (CCTV), public address systems, emergency telephones, silent alarm, card or controlled access.

- Participate in the Threat and Vulnerability Assessment Resolution Process. METRO conducted a Threat and Vulnerability Assessment (TVA) for the Central Phoenix/East Valley (CP/EV) LRT Project. TVAs shall also be completed for future rail lines or extensions. A TVA shall follow the following basic steps: (1) Identify the Function of Facility or System, (2) Identify critical assess and loss impact, (3) Conduct Threat Analysis & Assessment, (4) Perform Vulnerability Analysis & Assessment, and (5) Conduct Risk Assessment & Determine Priorities, Identify Potential Countermeasures. Based on METRO's decisions, the designers shall implement countermeasures throughout the design. If design begins prior to completion of the TVA, designers shall assume that vulnerabilities, severity of threats, and potential countermeasures will be similar to those documented in the CP/EV TVA Final Report, dated November 29, 2004.

- Implement the recommendations included in the FTA's Transit Security Design Considerations, FTA-TRI-MA-26-7085-05, November 2004.

- Comply with any U.S. Department of Homeland Security, Office for Domestic Preparedness directives.

- Use the Transportation Research Board Report Deterrence, Protection, and Preparation as guidance throughout the design.

18.6 Information & Information Systems Security

Many functions within VMR require individuals to be exposed to sensitive data such as personal identification information, procurement documents, and security information. Improper storage or unauthorized disclosure of sensitive information can result in civil and/or criminal penalties, an increased vulnerability to criminal attacks or security breaches on computer systems, or a negative impact on the transit system's reputation. Contractors shall establish a formal information protection program and plan that at least meets the standards noted below.

1. Comply with the Code of Federal Regulations regarding the release of transit-related Homeland Security Information.

2. Security related information which shall be protected includes:

    a. Assessments, plans or records that reveal the susceptibility of public service agencies to terrorism.

    b. Drawings, maps or plans that reveal the location and vulnerabilities of critical infrastructure.

    c. Records or other information that reveal the details of specific emergency response plans.

    d. Handbooks, manuals or other information detailing procedures to be followed by response agencies in the event of a terrorist attack.

    e. Records or other information that identify the equipment used for covert, emergency or tactical operations.

    f. Records, or other information that compromise radio frequencies, response codes, passwords, or programs used by response agencies.

These types of documents may not be subject to subpoena or discovery and not subject to inspection by the general public.

3. Personal, Financial, and Medical Information shall be protected in accordance with federal regulations (e.g. Freedom of Information Act, Privacy Act, Health Insurance Portability and Accountability Act (HIPAA), and Health and Human Services Standards for Privacy of Individually Identifiable Health Information), and numerous Arizona statutes. For guidance see the Arizona Attorney General Agency Handbook, Chapter 6 at http://www.azag.gov/Agency_Handbook/Agency_Hanbook.html.

4. Information Technology systems (e.g. computer networks, TVMs) used for information storage shall be protected. Systems used to store and process security and personal information shall be protected, as the stored data would warrant.

5. Individuals who require access to sensitive, personal, or proprietary information in order to accomplish their duties shall sign and comply with a non-disclosure agreement. This agreement prohibits an employee from disclosing designated information, even after their employment ceases. The agreement should be reviewed when the employee is terminated or otherwise leaves the company.

18.7 Detailed Security Criteria

Detailed security related criteria for various subsystems of the METRO Project are covered in the applicable section of this Design Criteria Manual. References to a few of these items are provided below to assist the designer.

Sections 3.4.4 and 6.8.6 - Fencing and Barriers

Sections 6.4.12 and 12.2.5 - Video Surveillance

Sections 6.4.11 and 12.2.2 - Emergency Call Box

Section 6.4.7 - Publicly Accessible Receptacles

Section 6.9.2.3 - Security Materials

Section 7.2 - Operations Safety and Security Related Criteria

Section 12.5 - Intrusion Detection

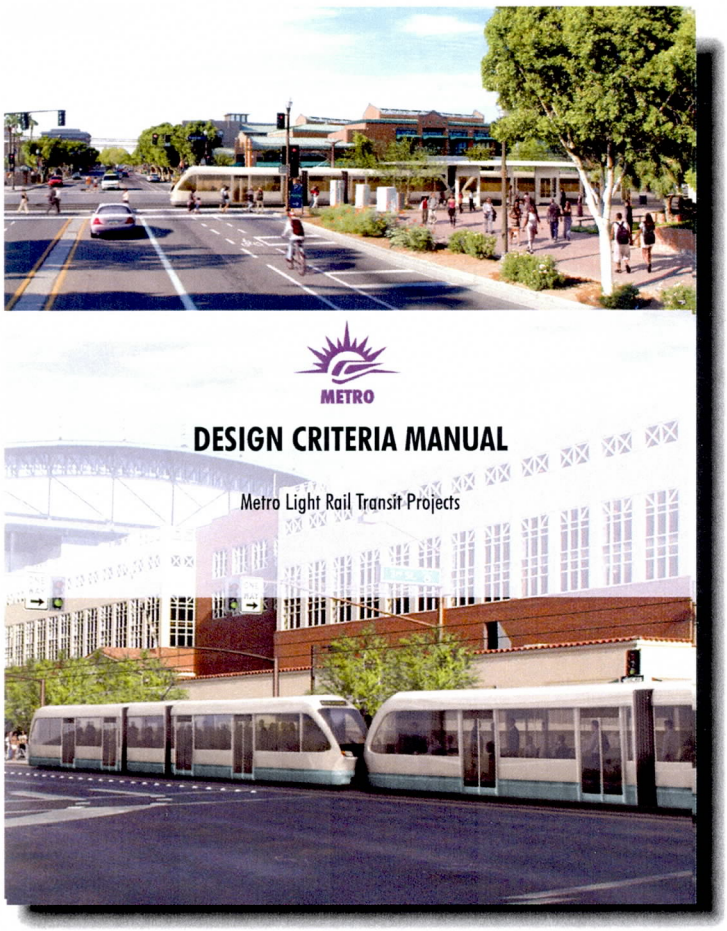

Chapter 19.0

Stray Current and Corrosion Control

19.0 STRAY CURRENT AND CORROSION CONTROL

19.1 General

The purpose of this chapter is to establish the standards and design policies for the stray current and corrosion control on the METRO LRT Project.

Specific objectives that have been established with regard to stray current and corrosion control are as follows:

- Maximize design life of light rail facilities by avoiding premature failure caused by corrosion. Minimum usable life shall be 50 years.
- Minimize annual operating and maintenance costs associated with material deterioration.
- Ensure continuity and safety of operations by reducing or eliminating corrosion related failures of light rail facilities and subsystems.
- Minimize possible detrimental effects to LRT facilities, and to facilities belonging to others, caused by stray earth currents generated by operation of a dc powered rail return transit system.

19.2 Scope

Three major categories of corrosion control are addressed in this chapter. These categories are as follows:

- Stray current corrosion control,
- Natural soil corrosion control, and
- Atmospheric corrosion control.

Sections 0 and 0 in this Chapter describe stray current control criteria, which relate mostly to trackwork and traction power facilities and subsystems. Section 0 describes corrosion control criteria for buried structures, primarily metallic piping. Section 19.7 describes corrosion control criteria for reinforced concrete structures, and Section 0 establishes the design requirements to minimize corrosion related problems caused by atmospheric corrosion conditions.

19.3 Pre-Design Surveying and Testing

A Pre-Design Corrosion Control Survey shall be conducted prior to design of a METRO LRT project. This survey shall investigate potential corrosive effects on METRO facilities and equipment as well as the effects of the LRT installation on adjacent facilities and equipment not owned by METRO. The survey shall consist of gathering existing stray current conditions, soil corrosivity and atmospheric conditions or other factors affecting the level of corrosion that the project may experience if such conditions are not mitigated.

The survey shall provide information on equipment, piping, and other fixed facility data gathered from local utilities including any corrosion mitigation techniques currently installed by those entities, as well as any special requirements of those utilities concerning equipment types and installation requirements.

As part of the survey, tests of soil samples for PH, resistivity, chlorides (ppm) and sulfates shall be completed and shall be analyzed for potential corrosive effects. The tests shall be conducted on 25

percent of the soil borings (equally spaced) along the project length or every 500 feet, whichever is more frequent and at each proposed TPSS building site. Soil samples shall also be taken at a pipe depth level of approximately 4 feet. Where testing reveals existing stray current, the stray current shall be investigated as to the source, cause, duration and magnitude and shall be thoroughly documented in the report.

Survey results shall be submitted in a report for review and acceptance by METRO prior to design.

19.4 Stray Current Control

The concept of stray current control is to limit the level of stray earth currents at the source, specifically the LRT rail system, rather than trying to mitigate the corresponding effects (possibly detrimental), which may otherwise occur on LRT facilities and other underground structures being impacted by LRT operations. The basic requirements for stray current control are as follows:

- Operate the LRT mainline system without direct or indirect electrical connections between the positive or negative traction power distribution circuits and earth (ground).
- Consider the necessary features of the traction power facilities and/or the trackwork design such that maximum stray earth currents, emanating from the LRT system during normal revenue operations, does not exceed 20 milliamps/1000 feet of track (two rails).
- Final Designer shall also use information contained in the Baseline Corrosion Control Survey Report.
- Conduct periodic rail to earth resistance testing and stray current monitoring after the LRT system is in revenue service.

19.5 Trackwork

Trackwork shall meet the following stray current and corrosion control requirements.

19.5.1 Ballasted Track Construction

Ballasted track construction shall be designed for a minimum effective in service uniformly distributed track-to-earth resistance of 500 ohms per 1,000 feet of track (two rails). Insulated tie plates and fasteners shall be used to provide the required track-to-earth resistance.

19.5.2 Embedded Track Construction

Embedded track construction shall be designed for a minimum effective in service uniformly distributed track-to-earth resistance of 250 ohms per 1,000 feet of track (two rail). This resistance criterion shall be met through appropriate design of insulated track in accordance with the following criteria:

- Electrical insulation shall be provided between rail/fastening assembly and supporting track slab, or between supporting track slab and ground by means of insulating materials. Insulation through use of the rail boot shall be considered for this project.

19.5.3 Direct Fixation Track Construction

Direct fixation track construction shall be designed for a minimum effective in service track-to-earth resistance of 500 ohms per 1,000 feet of track (two rails). This resistance criterion shall be met through appropriately designed insulated track fasteners.

19.5.4 Track-to-Earth Resistance Testing

The stated minimum track-to-earth resistances for the LRT systems shall be measured during the construction and pre-start-up phases of the transit system in accordance with ASTM G 165-99, and shall be submitted to METRO for acceptance.

19.5.5 Special Trackwork and Hardware

19.5.5.1 Crossovers Turnouts

Crossover turnouts shall be designed for a minimum track-to-earth resistance equal to that of adjacent trackwork.

19.5.5.2 Hardware

Switch machines, signaling devices, communication systems, and any other devices or systems, which may contact the rails, shall be electrically isolated from earth and/or insulated from the rail system. The criteria shall be met using dielectric materials electrically separating the devices/systems from earth and/or the rail system.

19.6 Traction Power Facilities and Subsystems

The traction power facilities shall meet the following stray current and corrosion control requirements.

19.6.1 Traction Power Substations

19.6.1.1 Mode of Operation

Mainline traction power substations shall be operated with an ungrounded negative system. There shall be no direct electrical connections between the negative system and the substation ground system, or any other grounded structures. In addition, mainline operational rectifiers shall be electrically separate from the yard. The shop rectifier shall be grounded to the building ground and separate from the yard rectifier.

19.6.1.2 AC Ground System

From a stray current control standpoint, the incoming AC supply neutral shall be electrically separate from the substation ground system and the DC negative system.

19.6.2 Overhead Contact System

19.6.2.1 Minimum Resistance-to-Earth Requirements

The positive power distribution circuit, consisting primarily of the overhead distribution and contact system, shall have a minimum effective in-service resistance to earth of at least 1 Meg Ohm per 1,000 feet of double catenary system.

19.6.2.2 Catenary System Support Poles

For locations other than at bridge structures, electrical ground facilities for adjacent catenary system support poles shall not be interconnected. This shall eliminate the possible transference of stray earth currents from one portion of the transit system to another because of an electrically continuous ground system.

Separate ground rods and 4/0 AWG bare copper cable shall be provided for each catenary system support pole, except for poles on bridge structures.

Where catenary system support poles will be located on elevated structures other than bridges, the poles shall be grounded individually or in groups.

Where catenary system support poles will be located on bridge structures, grounding provisions shall be made to interconnect each pole to a bonded bridge reinforcement cage, which will be grounded in accordance with paragraph 0.

For OCS bridge soffit catenary supports (embedded and externally attached) under the bridge, provisions shall be made for galvanized catenary support channels, hot-dip galvanized swivel pin and eyebolt, and interconnected through 4/0 AWG copper grounding cable. This 4/0 AWG grounding cable shall be extended to ground rods. Catenary support hardware, concrete inserts, and studs shall be epoxy coated.

19.6.3 Negative Distribution System

19.6.3.1 Negative System to Earth Potential Detection

Facilities shall be installed at each traction power substation to automatically ground the negative bus of the substation rectifier unit during the occurrence of excessive dc potentials on the negative bus. The equipment shall be capable of automatically removing the ground connection upon removal of the excess voltage. The basic operating principles of the fault detection system shall be as follows:

- Should the potential exceed a predetermined set level (not greater than 70 volts), the device shall be activated and thereby connecting the negative system to the substation ground electrode/mat and allowing current to pass from the ground mat to the negative bus through a diode unidirectional type circuit.
- Operation of the device shall activate a visual and audio annunciator device within the substation to show that an unusual condition has occurred.

19.6.3.2 Crossbonds

Crossbonding shall be coordinated with the design in Chapter 10, Traction Power Supply and Distribution System, and Chapter 11, Signaling. Crossbond spacing shall not exceed 1,500 feet wherever possible.

19.7 Reinforced Concrete Structures

19.7.1 General Provisions

Corrosion control of reinforced concrete structures including retaining wall structures, embedded track slabs, piping, bridge footing, etc., shall be established by the following provisions:

- Stray current control measures.
- Cement type in accordance with ASTM C-150.
- A minimum of 2 inches of concrete cover on all steel reinforcement when the concrete is poured within a form.
- Minimums of 3 inches cover on all steel reinforcement where the concrete is poured directly against earth.
- Maximum water/cement ratio of 0.45 to 0.50 by weight to establish a low permeability concrete. Additives are allowed for additional strength and corrosion resistance.
- Reduction of air voids to establish a dense concrete structure.
- Chloride from all sources shall be restricted to less than 150 ppm.

19.7.2 Bridge Structures

The following provisions shall be made on ballasted track bridges:

- The structural surface supporting the ballast shall be well drained.
- A high volume resistivity waterproofing membrane shall be provided over the entire surface on which the ballast contacts the structure. The membrane can be fiberglass mesh/poured asphalt systems, rolled membranes, polyurea or other coatings with a demonstrated transit history. Panel products shall not be considered. Membranes where required by the manufacturer shall be protected with an asphaltic protective board immediately after the membrane is installed.
- A non-metallic test station (box) 14 inches x 12 inches x 4 inches deep shall be provided at each end of the structure.
- Wires shall be run to the nearest test box. Three ground rods are required at each end of the structure.
- At each site end of the structure, a 1½-inch PVC conduit shall be provided between the ground rods and the test box. A 4/0 AWG insulated cable shall be provided in the conduit, connected to the ground rods and extending into the test box.
- Wire numbers shall be provided on both ends of the wire, or color-coded wires shall be provided.

- Continuous test leads connecting the test leads to a reinforcement bar, the test leads of a continuous reinforcement bar, and a continuous collector bar shall be used.
- An extra (non-standard) lap-welded continuous top longitudinal #4 reinforcement bar in the deck slab at each girder and within 1 foot of the inside face of the concrete barriers shall be provided.
- Longitudinal bars shall be weld connected to a transverse collect bar at each bent cap, hinge diaphragm, abutment diaphragm, and abutment backwall.
- Two 2/0 AWG copper cables shall be exothermic welded to the transverse collector bars in both diaphragms.
- Prior to placing ballast, the rebar system shall be tested for continuity. The rebar system resistance shall be within 10% of the theoretical resistance of the system.

The following provisions shall be made on non-ballasted bridges:

- The top layer of reinforcement in the slab beneath the trackway shall be made electrically continuous by arc welding the longitudinal bars at the splices.
- Collector bars shall be tack welded to the longitudinal reinforcement at each end of the structure. The collector bar shall be connected at pre-stress anchors. The minimum size of the collector shall be the same as the transverse reinforcement.
- A test box shall be provided at each end of the structure.
- Two 4 AWG insulated wires shall be connected to the collector bars at hinges, end of the structure, and at offsets where continuity cannot be maintained. A minimum of 6 feet should separate the wires wherever possible.
- Wires shall be run to the nearest test box.
- A ground rod facility shall be provided at each end of the structure.
- A minimum of three ground rods are required at each end of the bridge. Long bridges may require additional ground rod arrays. The ground resistance, when measured at the ground rod locations, shall be 5 ohms or less.
- At each site end of the structure, a 1½-inch PVC conduit shall be provided between the ground rods and the test box. A 4/0 AWG insulated cable shall be provided in the conduit, connected to the ground rods, and extended into the test box.
- Wire tags with numbers shall be provided on both ends of the wire and the wires shall be color-coded.
- Prior to placing concrete, the rebar system shall be tested for continuity. The rebar system resistance shall be within 10% of the theoretical resistance of the system.

19.7.3 Retaining Walls

The following provisions shall be made for retaining walls:

- Reinforcing tie-backs used for reinforced earth retaining walls shall be non-metallic.

19.7.4 Embedded Track Slabs

The following provisions shall be made on embedded track slabs:

- The top layer of reinforcement in the slab beneath the trackway shall be made electrically continuous throughout the embedded track system by arc welding the longitudinal bars at the splices and installing collector bar(s) at each expansion joint. 4/0 AWG insulated copper jumper cables cable shall be exothermically welded to the collector bar on adjoining track slabs.
- Where the track slab crosses bridges or other structures and the track slab continues on the other side, then 4/0 AWG copper jumpers shall be installed between the two separate track slabs so the slabs are electrically continuous. The jumper cables shall be installed in PVC conduit, and the number of cables required shall be determined by the Corrosion Engineer of Record during final design.
- A test box shall be provided every 400 feet and at each end of the slab. The test box shall be located within the right-of-way of the system to allow testing with minimum impacts to train and vehicular traffic. Preferred locations are on sidewalks or platforms.
- Two 4 AWG insulated wires shall be connected to the collector bars. A minimum of 6 feet should separate the wires wherever possible.
- Wires shall be run to the nearest test box. Wire tags with numbers shall be provided on both ends of the wire and the wires shall be color-coded.
- Prior to the pouring of the concrete, the rebar system shall be tested for continuity. The rebar system resistance shall be within 10% of the theoretical resistance of the system.

19.8 Maintenance Facility

19.8.1 Track

Tracks within the Maintenance Facility (including those inside the main shop and daily inspection buildings) shall be electrically connected to the building grounding system.

19.8.2 Traction Power

The traction power substation shall be a separate buss/yard rectifier (See Section 0).

19.8.3 Buried Structures

Buried structures, including electrical conduits, shall be protected from stray current corrosion. Protection shall be performed using non-metallic conduits or grounding of metallic conduits.

19.8.4 Overhead Catenary System (OCS)

The overhead catenary system shall be double insulated to prevent stray currents and for personnel safety. All catenary poles shall be grounded through ground rods.

19.9 Corrosion Control for Buried Structures

19.9.1 General

Corrosion control criteria for below grade, buried metallic, and reinforced concrete facilities are dependent on the following:

- Material of construction. Use of aluminum or aluminum alloys for direct burial shall not be permitted.
- Location along the transit route.
- Information contained in the Predesign Corrosion Control Survey.
- Accessibility of the structure after installation.
- A desired useful life of 50 years.
- Maintenance requirements.

Non-metallic materials shall be used in the manufacture and construction of the various facilities where permissible and economically feasible.

19.9.1.1 Pressure Piping

Non-metallic piping shall be used where permissible and economically feasible. Where metallic piping will be used, the requirements specified below shall be met.

19.9.1.2 Cast Iron, Ductile Iron and Steel Pressure Pipe

External surfaces shall have a protective coating with a minimum bulk resistivity of 10 Meg Ohms.

Two 8 AWG wires shall be provided to test the coated pipe for coating holidays on site. The holiday detector voltage shall depend on coating thickness in accordance with manufacturers recommendations, and in accordance with NACE RP0274 and RP0188.

Interconnecting piping and other structures shall be electrically isolated using non-metallic pipe inserts, insulating flanges or couplings. The use of non-metallic, concentric support spacers and watertight end seals shall be used where the piping is routed through a metallic casing. An insulated connection shall be provided at all tie-ins to non-protected facilities.

Electrical continuity shall be maintained through the installation of insulated copper wires across mechanical joints (except those intended to be isolators), which shall be used for cathodic protection. For pipes smaller than 10 inches, two 4 AWG copper wires shall be installed. For pipes larger than 10 inches, three 4 AWG copper wires shall be installed.

Electrical access to the piping through test stations installed at buried insulated connections and along the piping at nominal 150-foot intervals shall be provided. Test stations shall consist of two 8 AWG insulated stranded copper wires exothermically welded to the pipe, and a separate 12 AWG insulated stranded copper wire welded or brazed to a 6-inch length of #6 steel reinforcing located 12 inches below the pipe. The three wires shall be terminated in a permanent, accessible, at-grade metallic curb box, or other METRO acceptable enclosure. Where insulated connections are required, two test wires shall be installed on both sides of the connection and terminated in a common test box.

Cathodic protection of the piping installation shall be provided through a sacrificial anode system. Facilities must also be included in the design of these systems to periodically evaluate the effectiveness of the cathodic protection installation and determine the level of corrosion control. Calculations shall be provided and submitted to METRO for a 50–year anode life.

19.9.1.3 Copper Pipe (Pressure)

Buried copper service pipe shall have an exposed, accessible, insulating union installed where the piping enters through a building wall or floor. A nonmetallic, insulating, watertight seal shall also be installed at each pipe penetration point to effectively separate the piping from building structural elements. Cathodic protection shall be provided where needed based on soil conditions.

19.9.1.4 Reinforced/Prestressed Concrete Pipe (Pressure)

Prestressed concrete cylinder pipe shall not be used in the area of the yard and maintenance shop facilities where an analysis of soil borings indicates the pipe will be exposed to chloride concentrations in excess of 200 ppm.

Design and fabrication of prestressed concrete cylinder pipe shall be in accordance with AWWA Standard C301, with the following provisions:

- A minimum mortar coating thickness of 1 inch.
- The use of 6-guage or larger prestressing wire. The use of Class IV wire shall not be permitted.
- Use of Type II cement, or a sulfate fly ash modified Type II cement or Type V cement, when analysis of soil borings indicates the pipe will be exposed to soil sulfate concentrations in excess of 2,000 ppm, or ground water sulfate concentrations in excess of 1,500 ppm.
- Electrical continuity between steel cylinder and prestressing wires at each end of a fabricated pipe section.
- Provide a minimum of two longitudinal shorting straps for prestressing wire. Number and size of straps shall be determined on an individual basis.

Design of reinforced concrete pipe with steel cylinder including mortar coated steel pipe shall be in accordance with applicable AWWA standards. Cement requirements shall be in accordance with those listed above for prestressed concrete cylinder pipe.

Design and installation of prestressed and reinforced concrete cylinder pipe shall include the following minimum provisions:

- Electrical continuity between adjacent pipe sections by installation of continuity joint bonds. The number and size of the bonds shall be determined on an individual basis.
- In-line electrical insulating devices for electrical insulation of pipe from interconnecting pipe, other structures, and segregation into discreet electrically isolated sections depending upon the total length of piping (see Section 19.9.3.2).
- Permanent test/access facilities to allow for verification of continuity and effectiveness of insulators and mortar coatings. Test facilities shall be installed at all insulated connections and at intermediate locations, either at intervals not greater than 500 feet or at greater intervals determined on an individual basis.

- The need to provide an external protective coating to provide an electrical and waterproof barrier shall be considered on an individual structure basis based upon tested soil and ground water conditions.

19.9.1.5 Gravity Flow Piping (Non-Pressurized)

Gravity fed piping for water drainage systems shall be non-metallic if mechanical considerations and soil conditions are suitable.

19.9.1.6 Corrugated Steel Pipe (Non-Pressure)

Galvanizing, both interior and exterior, shall be to a combined minimum thickness of 2.0 ounces per square foot of coated surface (interior and exterior).

Protective coating with a minimum resistivity of 10 Meg Ohms on the internal and external surfaces shall be of an asphalt or polymeric material. Hot -applied asphalt based coatings shall have a minimum dry film thickness of 50 mils, and an established performance record for the intended service.

19.9.1.7 Cast Iron And Ductile Iron Pipes (Non-Pressure)

Piping in this category shall have an internal mortar lining, and an application of a bituminous seal coating the internal mortar lining and external surfaces. External surfaces shall have an additional application of protective coating. This coating shall consist of a cold-applied, polyethylene-backed mastic tape (minimum 20 mils total thickness) requiring a compatible primer for application, or a polyethylene encasement per the pipe manufacturer's recommendations.

19.9.1.8 Reinforced Concrete Pipe (Non-Pressure)

A water/cement ratio of 0.45 or lower by weight shall be used to establish a low permeability concrete.

A maximum of 150-ppm at chloride concentration shall be allowed in mixing water and all other components and/or mixtures for concrete used in core fabrication and outer mortar coating.

Application of a bituminous seal coating shall be made to the internal and external surfaces of all pipes in this category.

19.9.1.9 Electrical Conduits

Underground electrical power conduits shall be of non-metallic construction (PVC (Schd. 40 min.), fiberglass, or similar material). The two exceptions to this would be for:

- Conduit bends in excess of 22.5 degrees, and
- Risers

Where metallic conduits are necessary, the conduit shall be of galvanized rigid steel construction with a PVC topcoat (10 mils).

19.9.1.10 Piles

The piles that will be embedded in concrete at bent footings shall have an epoxy coating (minimum 20 mils dry film thickness). The coating shall completely cover concrete or metal surfaces, including any exposed reinforcing or prestressing steel.

19.9.2 Facilities Owned by Others

19.9.2.1 Replacement/Relocation of Facilities

Corrosion control requirements for underground facilities, which are owned and/or operated by others, and shall be either relocated or replaced as part of the METRO Project, shall be limited to the minimum requirements necessary for stray current control. The scope of these requirements relates to buried metallic pressure piping only. Specifically, the following minimum criteria shall be met for steel, cast iron, and ductile iron pressure piping:

- Electrical continuity through the installation of insulated copper wire (minimum of two) across mechanical joints (except those intended to be insulators). The minimum wire size shall be 4 AWG stranded copper; larger sizes may be required under special conditions.
- Electrical access to the piping through test stations at 100 to maximum 500 foot intervals. Test stations shall consist of two 12 AWG insulated stranded copper wires exothermically welded to the pipe, and a separate 8 AWG insulated stranded copper wire welded or brazed to a 6-inch length of #6 steel reinforcing bar located 12 inches below the pipe. The wires shall be housed in a permanent, accessible, at-grade test box or handhole with a metal cover.

The need for additional measures, such as electrical isolation using insulated connection between the new and existing piping and application of a protective coating system, and/or installation of a cathodic protection system, shall be as agreed to by METRO and the individual utility operator. The need for these, and/or other measures, shall be based on the stray current/corrosion control requirements of the specific utility and the established performance record of the various structures within the given environment.

19.9.3 Corrosion Control Components and Subsystems

Site specific provisions for corrosion control components and subsystems for underground piping facilities, which are owned and/or the direct responsibility of METRO, shall be in accordance with guidelines established by NACE RP0169-92 and other applicable reference documents.

19.9.3.1 Electrical Continuity for Piping

Electrical continuity shall be established by exothermically welding two or more 4 AWG insulated stranded copper wires (maximum of 18-inches in length) between or across the pipe joint or coupling that shall be made continuous in accordance with the following criteria:

Pipe Diameter Inches	Number of Bonds Wires
12 or less	2
greater than 12	3

Wires shall have 600 V Type THW insulation.

Verification of pipeline continuity shall be completed prior to backfilling and again prior to final paving.

19.9.3.2 Electrical, Insulating Joints for Piping

Electrical insulating spacers for piping shall be achieved using nonmetallic inserts, insulating flanges, couplings or insulating unions. Concentric support insulating spacers are also required at locations where piping is routed through a casing.

Insulating devices shall have a minimum resistance of 10 Meg Ohms before installation, and shall have mechanical ratings equivalent to the structure in which it is installed.

Insulating devices (except complete non-metallic units) shall be coated internally with a high dielectric coal-tar epoxy for a distance on each side of the insulator equal to twice the diameter of the pipe in which it is used.

Insulating devices (except non-metallic units) buried in soils shall be coated with coal-tar tape or coal-tar epoxy coating with minimum dry film thickness of 20 mils. A wax-tape type coating system may be used with approval of METRO.

Insulating devices installed in chambers or otherwise exposed to partial immersion or high humidity shall have a protective coating such as coal-tar epoxy or equivalent applied to a minimum thickness of 10 mils over all components. A wax-tape type coating system may be used with the approval of METRO.

19.9.3.3 Sacrificial Anodes

Anodes shall consist of a galvanized steel strip core bonded to a magnesium alloy. The specific material used shall be dependent on the particular facility. The core shall extend the full length of the anode. Anodes shall be of the ingot type (meeting a 50 year design life) and shall be of specified weight and shape. Anodes with prepackaged backfill shall consist of a cloth sack containing a specially prepared backfill mix to provide a stable electrical contact between the anode and the soil. Connecting wires shall be single stranded 12 AWG copper, with THW insulation, soldered to the steel core strip and sealed against moisture penetration.

19.9.3.4 Pipeline Coatings

Coatings shall have mechanical characteristics capable of withstanding reasonable abuse during installation and earth stresses after installation for the design life of the piping being coated.

Generic coatings suitable for use on buried pipelines are as follows:

- Extruded polyethylene/butyl base system,
- Coal-tar pipeline enamels (hot-applied),
- Coal-tar epoxies (two-component systems),
- Polyethylene-backed butyl mastic adhesive tapes (cold-applied),
- Polyethylene encasements systems (as approved by METRO),
- Bituminous mastics may be used for irregular shapes.
- Wax Tape Systems

19.10 Atmospheric Corrosion Control

19.10.1 General

The design of exposed equipment and facilities shall consider the possible impact of atmospheric corrosion conditions, with the primary objective being to ensure that the required service life of a particular facility is not compromised because of corrosion related problems or failures. Specific atmospheric corrosion control aspects, which must be addressed, are included in the following subsections. Designers should also use information contained in the Predesign Corrosion Control Survey.

19.10.2 Traction Power Substations

Exterior metallic surfaces of the substation enclosures shall be coated with a sacrificial and barrier type coating.

19.10.3 Electrical Equipment & Enclosures Installed Within Substation Enclosure

Steel or ferrous surfaces shall be coated with a sacrificial and barrier type coating.

19.10.4 Overhead Contact System Support Structures

19.10.4.1 Poles

Poles, pole base covers, and other rigid support structures shall be galvanized. An acrylic topcoat shall also be applied where aesthetics are considered.

19.10.4.2. Overhead System

Material selection for the overhead current carrying conductors and support system shall be based on value engineering and an established performance record for these facilities in similar types of environments. The support system includes brackets, downguys, cantilevers, bracket arm, headspace, cross-spans, terminations, and counterweights. The specific materials selected shall be of adequate corrosion resistance to ensure that the required service life of 50 years shall not be compromised because of corrosion related problems. The materials shall not require maintenance coatings or other procedures relating to corrosion control during the design life of these facilities.

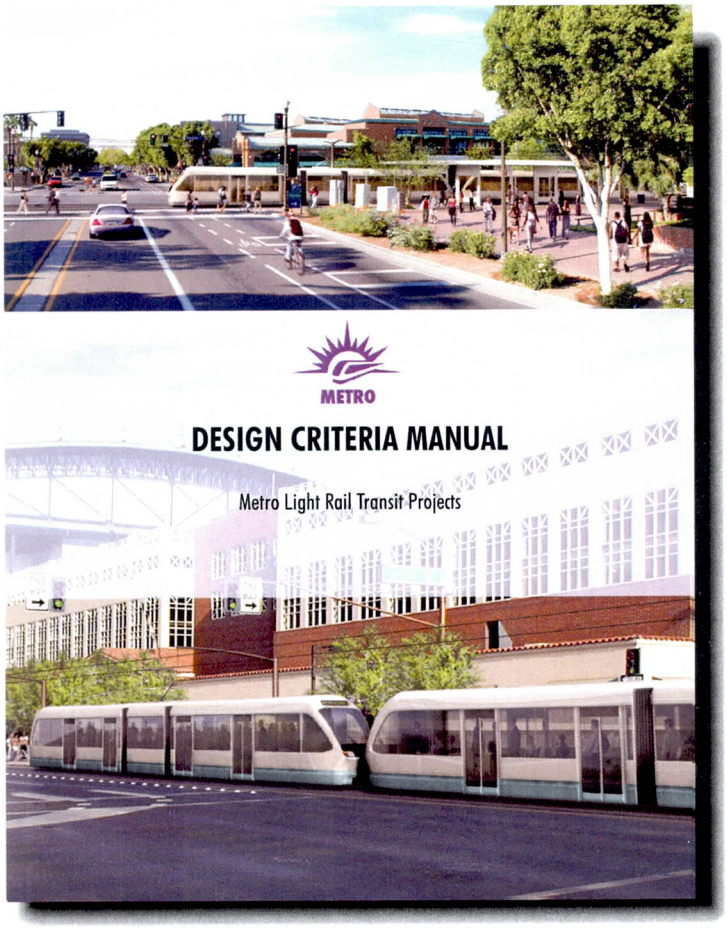

Appendix A

Review Comments

METRO Design Criteria Manual, Phase II
SUBMITTAL REVIEW COMMENTS

REVIEW DATE:	**June 5, 2006**	**SUBMITTAL TITLE:**	**Draft Submitted on May 26, 2006**
COMMENTS DUE:	June 16, 2006	**SUBMITTAL TYPE:**	Design Criteria Manual
	REVIEW COORDINATOR:	Alvin Livingstone	
	ORGANIZATION:	PMC	
COMMENTS SUBMITTED	**DISCIPLINE:**	Engineering	
May 31, 2006	**REVIEWER:**	Steve Gottesman (METRO)	

REF. #	PAGE	DWG, #SPEC SECTION	COMMENTS/FINDINGS	RESPONSE	ACTION
1		6.8.3 Bicycles	At single entry stations as agreed to in the City of Tempe, 2 bike lockers and 2 rack sets shall be provided at the emergency exit end of LRT stations. This is the single design exemption to bicycle racks and lockers NOT being permitted on METRO station platforms and entrance areas at any other location.	1	2 – Bike lockers and rack sets will be provided. D
1a		Chapter 6 – Stations	• Consistent, steady growers. METRO can't alter the landscape maintenance cycles by seasonal growth. • The least amount of debris. • If the vine blooms, flowers or seeds it must not stain if it is wet or crushed, etc. • No part of the vine shall create a slippery environment under any weather condition. • Select vines grown regionally that are easily available. • Select a parsimonious species, attrition is inevitable. • No vines that cause rash or skin irritation. • **A maximum of 4 vine species** for maximum system identity and minimum long term maintenance costs. • This is stating the obvious, however, thorns, spines or prickles of any kind are prohibited. • No plant that requires use of chemicals to sustain health or growth. • Plants that attract bees, whiteflies or other undesirable insects should not be used.	1	D

*** RESPONSE: 1=Will Comply 2=Discussion or Clarification Required 3=No Change Required **D=Action Completed**

METRO Design Criteria Manual, Phase II
SUBMITTAL REVIEW COMMENTS

COMMENTS SUBMITTED		DISCIPLINE:	Engineering		
June 2, 2006		REVIEWER:	Chris Gambla (Lea+Elliott)		
REF. #	**PAGE**	**DWG, #SPEC SECTION**	**COMMENTS/FINDINGS**	**RESPONSE**	**ACTION**
2		Chapter 19 edits	Chapter 19, Stray Current and Corrosion Control See attached Chapter 19 with edits indicated	1	D: METRO, B&C, and L+E have resolved all comments. Chapter 19 has been updated.

COMMENTS SUBMITTED		DISCIPLINE:	Engineering		
		REVIEWER:	Bill Gustafson (METRO)		
REF. #	**PAGE**	**DWG, #SPEC SECTION**	**COMMENTS/FINDINGS**	**RESPONSE**	**ACTION**
3	2-2	2.2.1	Change "spiralized" to "spiral"	1	D
4	2-4	2.2.1.2	Change "spiralized" to "spiral"	1	D
5	2-4	2.2.1.2	Remove "[Note: to be verified when LRV selected]" two places. The vehicle has been selected.	1	D
6	2-8	2.1.1.1	Delete "CBD". This problem can occur anywhere and the limits of a CBD is never known.	1	D
7	2-11	2.3	Have the GEC furnish the data for the LRV before its lost.	1	The data is noted in Chapter 8, Vehicles.

*** RESPONSE: 1=Will Comply 2=Discussion or Clarification Required 3=No Change Required **D=Action Completed**

METRO Design Criteria Manual, Phase II
SUBMITTAL REVIEW COMMENTS

COMMENTS SUBMITTED		DISCIPLINE:	Engineering		
		REVIEWER:	Bill Gustafson (METRO)		
REF. #	PAGE	DWG, #SPEC SECTION	COMMENTS/FINDINGS	RESPONSE	ACTION
8	2-15	2.3.3.3	Has Safety and Operations & Maintenance approved the reduction to 24"?	1	Question posed to Steve Bethel via e-mail. I recommend no change to the Criteria. The 24 inches is typical for trained employees.
9	2-15	2.3.4	Confirm that minimum 13' pantograph height meets current LRV criteria.	1	D
10	Figure 2-8	Note (3)	The LRV is now known; so the noted dimensions are known.	1	Dimensions were reviewed and revised as necessary.
11	Figure 2-8	Rail to Platform dimension	13-3/8" does not match 14.0" shown on KD5-5050 track plan	1	Dimensions were reviewed and revised as necessary.
12	2-27	Table 2.1	Replace with current LRV data	1	D
13	2-28	Table 2.2	Replace with current LRV data	3	Operations does not want specifics on the Kinkisharyo vehicle.
14	2-29	Table 2.3	Replace with current LRV data	1	D

*** RESPONSE: 1=Will Comply 2=Discussion or Clarification Required 3=No Change Required **D=Action Completed**

METRO Design Criteria Manual, Phase II
SUBMITTAL REVIEW COMMENTS

COMMENTS SUBMITTED		DISCIPLINE:	Engineering		
		REVIEWER:	Bill Gustafson (METRO)		
REF. #	**PAGE**	**DWG, #SPEC SECTION**	**COMMENTS/FINDINGS**	**RESPONSE**	**ACTION**
15	Chapter 2		Provide a specific overall note that refers to the current LRV vehicle…define the vehicle that applies.	3	Operations does not want specifics on the Kinkisharyo vehicle. METRO does not want to create a sole source scenario.
16	3-1	3.1.3	If there has been a single failure in the RW process, it is that the taking of RW and Easements has not been performed by in the field Land Surveys including the definition of existing construction impacted by the take or easement. Appraisals performed by others have often been in error because the appraiser was not aware of or could not determine the impacts to the properties. An on-paper definition of RW an easement is only the beginning. An in-field conforming land survey must be performed. In addition, field marking should be present so that the limits and impacts are identifiable to the follow-on appraiser.	1	Re-written with input from Manny Diaz & Maria Hyatt
17	3-4	3.2.3	2nd bullet: don't know what this means. How can utility be 6' below rail and sleeve? Clarify.	1	Underground Utility Typo
18	3-5	3.2.3 Sleeves	Define HDPE & CLSM here.	1	Defined under sleeves

*** RESPONSE: 1=Will Comply 2=Discussion or Clarification Required 3=No Change Required **D=Action Completed**

METRO Design Criteria Manual, Phase II
SUBMITTAL REVIEW COMMENTS

COMMENTS SUBMITTED		DISCIPLINE:	Engineering		
		REVIEWER:	Bill Gustafson (METRO)		
REF. #	**PAGE**	**DWG, #SPEC SECTION**	**COMMENTS/FINDINGS**	**RESPONSE**	**ACTION**
19	3.2.6		Suggest that this paragraph be re-written. The Designer of the Civil systems should prepare existing utility base maps under the direction of METRO (Authority). This is to assure that the Designer obtains what is required. The current process did not seem to work well. METRO should coordinate updates with private utilities.	1	Preliminary data to be provided, but responsibility for base map to design engineer
20	3-8 & elsewhere		Arbitrary design submittal percentages appear throughout the Manual and are inconsistent. Suggest that a general submittal increment be stated in Chapter 1 and then coordinated throughout the manual (i. e. On-board or 30%; 65%, 95%, 100%, Final)	3	Submittal requirements will be determined based on negotiations during design.
21	3-8	3.2.11	Delete 2nd paragraph.	1	D
22	3-9	3.3	3rd paragraph: "Project Manager": Is that for the Designer or METRO? Is a definition required somewhere else?	1	"Design Engineer"
23	3-9		This chapter refers to criteria provided by the various Cities to protect their interests. The chapter does not appear to define criteria that protects the interests of METRO. METRO's desire is to have an all-weather system.	1	Add "All Weather" to 1st paragraph
24	3-14	3.4	2nd paragraph: "utilize and good right-of-way practices." Correct.	1	D
25	3-17	3.4.4	Delete "and/or ensure safety" Safety barrier should be addressed elsewhere.	1	D
26	3-17	3.4.4	Delete "Fencing is not required in public right of way." If a fence is required anywhere, where does one place it?	3	Fencing may be required to provide security.
27	3-17	3.5	Last sentence: cannot "verify by record drawings" previously legally defined documents that were used to purchase RW. Perhaps RW documents shall be recorded.	1	
28	3-17	3.6	Delete "and Parking Facilities". Parking facilities are handled in Chapter 6 and are typically outside of the jurisdiction of Streets.	1	D

*** RESPONSE: 1=Will Comply 2=Discussion or Clarification Required 3=No Change Required **D=Action Completed**

METRO Design Criteria Manual, Phase II
SUBMITTAL REVIEW COMMENTS

COMMENTS SUBMITTED		DISCIPLINE:	Engineering		
		REVIEWER:	Bill Gustafson (METRO)		
REF. #	**PAGE**	**DWG, #SPEC SECTION**	**COMMENTS/FINDINGS**	**RESPONSE**	**ACTION**
29	3-17	3.6.1	3rd paragraph: delete "and parking facilities"	1	D
30	3-18	3.6.1	1st paragraph: delete "and parking facilities"	1	D
31	3-19	3.6.4	Add "or as required by the Local authority"	1	D
32	Figure 3-3		Change "RPTA" to "METRO"	1	D
33	Figure 3-8		18' less 2'-5" is less than 16'. 16' is the current minimum for the City of Phoenix.	1	D Revised figure
34	All Figures		Suggest that lane width dimension be removed and simply referred to 3.6.3 requirements. Say, similar to Figure 3-10.	1	D
35	Figure 3-10		Delete underdrain note and draw them in section.	1	Drawn-In
36	4-2	4.2.1	Change "Pocket" to "Storage"	1	D
37	4-3	4.2.3	Correct title	1	D
38	4-3	4.2.3	Change "different track modules" to "differing track modulus"	1	D
39	4-10	4.5.7	17.5 kN/mm to 24.5 kN/mm is not a ft/lb conversion	1	Conversion is equivalent range of 140,000 lb/in to 300,000 lb/in. Changed the document.
40	4-11	4.6	Correct title and from where are Standard Drawings coming?	1	Trackwork Standard appears to be the figures in the Design Criteria Manual.

*** RESPONSE: 1=Will Comply 2=Discussion or Clarification Required 3=No Change Required **D=Action Completed**

METRO Design Criteria Manual, Phase II
SUBMITTAL REVIEW COMMENTS

COMMENTS SUBMITTED		DISCIPLINE:	Engineering		
		REVIEWER:	Bill Gustafson (METRO)		
REF. #	PAGE	DWG, #SPEC SECTION	COMMENTS/FINDINGS	RESPONSE	ACTION
41	4-15	4.8	3rd paragraph: refers to "Trackwork Standard Drawings". There are none that exist.	1	These drawings are either the Design Criteria figures or the Track Directive drawings are revised in Chapter 4 to indicate Track Directive drawings (ex. KS5-5010, KS5-8072)
42	5-1 & 5-2	5.2	References to ICBO/UBC should now also include IBC which has been adopted by most Local building code jurisdictions. IBC has replaced UBC for most recent codes. Some older UBC codes still apply in some jurisdictions.	1	By second phase all municipalities will use IBC D
43	5-2	5.3	The LRV has been determined. Clean up this sentence or delete.	1	D
44	5-2	5.3.2	"Uniform Building Code (UBC)" is now "International Building Code (IBC)" for "latest" application of Code.	1	D
45	5-4	5.3.5	"Uniform Building Code" becomes "international Building Code"	1	D
46	5-4	5.4	"Uniform Building Code" becomes "international Building Code"	1	D
47	5-5	5.5	2nd paragraph: add "where applicable" following "scour"	1	D
48	5-9	5.11.4.1	Fix "1/1000of" to "1/1000 of"	1	D
49	6-1	6.1	The scope should immediately state that Station Design Criteria includes "stations, transit centers, park and ride sites, LRT facilities outside of street right-of-way". Perhaps Station Design Criteria is the wrong title as this section defines so much more.	1	Changes made on title of Chapter 6.

*** RESPONSE: 1=Will Comply 2=Discussion or Clarification Required 3=No Change Required **D=Action Completed**

METRO Design Criteria Manual, Phase II
SUBMITTAL REVIEW COMMENTS

COMMENTS SUBMITTED		DISCIPLINE:	Engineering		
		REVIEWER:	Bill Gustafson (METRO)		
REF. #	**PAGE**	**DWG, #SPEC SECTION**	**COMMENTS/FINDINGS**	**RESPONSE**	**ACTION**
50	6-4	6.2.2.3	As early as possible and preferably within the 30% or on-board process, park and ride sites should be processed through a site development pre-application meeting. It is important to determine if any re-zoning or other restrictions may apply. The documentation used at the meeting shall be as defined within the particular Cities requirements for Pre-Application.	1	Bullet point was added to address possible rezoning
51	6-13		Add articles that define CCTV requirements for park and ride sites; ETELs for park and ride sites, security building for park and ride sites; lighting for park and ride sites; amenities including bike lockers and bike racks, etc.	1	Bullet points noting these items were added to 6.8.5
52	6-14	6.8.6	Fencing or security walls shall meet the Local jurisdictions parking site code requirements.	1	Note was added.
53	14-4	14.3	Minimum landscape requirements are governed by the Development Codes of the City in which a park and ride site is developed.	1	This is noted in the 6th bullet, para. 14.3.1; we did revise text to clarify this requirement.
54	15-22	15.7	Suggest that the traditional City of Phoenix method of street light design be used. That is general layout by City, design and power by APS or SRP as applicable. Line Section 3 design was completely redone by City and APS after the fact.	1	Street lighting section has been added to Chapter 15

*** RESPONSE: 1=Will Comply 2=Discussion or Clarification Required 3=No Change Required **D=Action Completed**

METRO Design Criteria Manual, Phase II
SUBMITTAL REVIEW COMMENTS

COMMENTS SUBMITTED		DISCIPLINE:	Engineering - Traffic operations		
June 7, 2006		REVIEWER:	Heide Young (COP)		
REF. #	**PAGE**	**DWG, #SPEC SECTION**	**COMMENTS/FINDINGS**	**RESPONSE**	**ACTION**
55		3.6.8	Sidewalks The designer shall reference the local jurisdictions design standards for the width of sidewalk and the width of the landscape buffer between the back of curb and new sidewalk. Generally, a 5' minimum sidewalk width is preferred. Comment: "6' width when adjacent to curb offset 5' sidewalk is preferred. High pedestrian generators may require wider sidewalks."	1	Added a statement that "sidewalk designs to be approved by the local jurisdiction.
56		3.6.3	Traffic Lane Widths Through and Left Turn Lanes: 10' absolute minimum - Comment "COP absolute minimum. Traffic Operations prefers a minimum of 11 feet next to raised curb, 12 feet is more desirable Through and Right Turn Lanes: 10' absolute minimum - Comment "COP absolute minimum. Traffic Operations prefers a minimum of 11 feet next to raised curb, 12 feet is more desirable.	1	Lane widths have been clarified

COMMENTS SUBMITTED		DISCIPLINE:	Engineering		
June 12, 2006		REVIEWER:	Terry Nash (HDR)		
REF. #	**PAGE**	**DWG, #SPEC SECTION**	**COMMENTS/FINDINGS**	**RESPONSE**	**ACTION**
57		Chapter 6	In chapter 6.0, Station Design Criteria, there is no mention of platform widths accommodating elevators, escalators, and/or stairs needed to access an overhead walkway. There will be future stations with these 'vertical elements' and it might be worth investigating a standard width or range of widths for stations with these features	1	We refer to building codes that address these issues.

COMMENTS SUBMITTED		DISCIPLINE:	Engineering		
June 14, 2006		REVIEWER:	Srinivas Goundla (COP)		
REF. #	**PAGE**	**DWG, #SPEC SECTION**	**COMMENTS/FINDINGS**	**RESPONSE**	**ACTION**
58			Bike Lanes Minimum standards - no comments	1	D

*** RESPONSE: 1=Will Comply 2=Discussion or Clarification Required 3=No Change Required **D=Action Completed**

METRO Design Criteria Manual, Phase II
SUBMITTAL REVIEW COMMENTS

COMMENTS SUBMITTED		DISCIPLINE:	Engineering		
June 14, 2006		REVIEWER:	Rob Hardy (Qwest)		
REF. #	**PAGE**	**DWG, #SPEC SECTION**	**COMMENTS/FINDINGS**	**RESPONSE**	**ACTION**
59		Chapter 3 Utilities	On Utility relocations, I would like to see a statement that allows for a variance for the in place facility that they may remain if VMR, city, etc. approve the variance. This would be for a case where the phone cable may be at 3'-10" and not at the required 66" or 48" deep. Utility base maps, for existing telephone cables are not to taken to mean that the drawings showing the facility show the exact location. Pot holing would be required to find the actual location and depth of the telephone facility. In other words the maps we may give you for our existing facility may not be accurate. Pot holing is required and blue staking.	1	This section was modified significantly. Deviation Request process was identified.
59 cont.			3.2.8 section: What does it mean "The Authority will require the consultant to submit plans for review. Final plan reproducible Mylar's...etc...shall be submitted 30 days prior to the scheduled 95 percent submittal date for project construction documents"? I won't have all the relocation plans submitted after I receive the 95% plans. It may take several years to design all of my reroutes. It is an ongoing process to design around conflicts. And my jobs will not be completed prior to the proposed build advertisement as stated in the paragraph 5 of 3.2.8.	1	Paragraph 7 was written to indicate that private utility company plans will be approved by METRO for construction prior to advertisement.
			Also, in some cases if a catch basin etc. can be redesigned to avoid a Qwest cable relocation then the basin should be redesigned if possible. That has happened on the on going Line Section and has saved some money.	1	Section 3.3.1, fourth paragraph was written to address this comment.

*** RESPONSE: 1=Will Comply 2=Discussion or Clarification Required 3=No Change Required **D=Action Completed**

METRO Design Criteria Manual, Phase II
SUBMITTAL REVIEW COMMENTS

COMMENTS SUBMITTED		DISCIPLINE:	Engineering		
June 14, 2006		REVIEWER:	Larry Engleman (METRO)		
REF. #	**PAGE**	**DWG, #SPEC SECTION**	**COMMENTS/FINDINGS**	**RESPONSE**	**ACTION**
60		Chapter 17 & 18	Section 17.7, first line of the reference listing; the correct reference is 6.8.6 rather than 6.8.11 as listed. Section 12.2.5; typo, remove the comma between "maintenance" and "shop" Section 6.4.11 says that there are two Emergency Call Boxes (ECB) per platform. The plan is to have one at single entry stations and provide conduit for a second one at double entry stations, to be added if needed.	1 1	D: Chapters 17 and 18 have been updated. Chapter 12 has been updated, and Section 6.4.11 revised as stated.
61			Section 12.2.2 refers to emergency phones, call boxes, etc. METRO has adopted the term Emergency Call Box for these devices. Since this section deals with telephones, consider removing references to Emergency Call Boxes and make that a separate section. ECB's are a device used to establish emergency communications with the Operations Control Center. Calls are initiated by pushing a button and two-way communications is established. There is no handset. An indicator light activates for hearing impaired when the call has been received at OCC, and OCC answers verbally. They are marked with a blue light, emergency use only graphics, and they meet all ADA criteria. When the ECB is activated a local strobe flashes along with a short duration audible alarm to alert people in the area that the ECB is being used.	1	Chapter 12 has been updated.

*** RESPONSE: 1=Will Comply 2=Discussion or Clarification Required 3=No Change Required **D=Action Completed**

METRO Design Criteria Manual, Phase II
SUBMITTAL REVIEW COMMENTS

COMMENTS SUBMITTED		DISCIPLINE:	Engineering		
June 15, 2006		REVIEWER:	Donna Zielinski (COP)		
REF. #	**PAGE**	**DWG, #SPEC SECTION**	**COMMENTS/FINDINGS**	**RESPONSE**	**ACTION**
62		Utilities	Utility companies are required to submit plans & obtain a permit when working within COP right of way from the Utility Section of the COP Engineering & Architectural Dept. The general information and plan design requirements are identified in COP Administrative Procedure 5.1. The Design Criteria Manual should reference AP 5.1 for utility construction located within right of way. Seems like the logical place would be Section 3.2.5 - Utility Design Reference. Along with the Water Dept & Streets website, you might add a reference the Engineering Dept. website: phoenix.gov/**phxutper.html**	1	Included with Section 3.2.8, however the reference requested is a construction document not a design requirement. Can add to Section 3.2.8

*** RESPONSE: 1=Will Comply 2=Discussion or Clarification Required 3=No Change Required **D=Action Completed**

METRO Design Criteria Manual, Phase II
SUBMITTAL REVIEW COMMENTS

COMMENTS SUBMITTED		DISCIPLINE:	Engineering		
June 15, 2006		REVIEWER:	Robert Gooch (SRP)		
REF. #	**PAGE**	**DWG, #SPEC SECTION**	**COMMENTS/FINDINGS**	**RESPONSE**	**ACTION**
63			Bridges crossing SRP canals should also be included in the list of items under SRP License Requirements. Also, please add Design Guidelines and Specifications for Bridge Crossings of Salt River Project Canals to your list of references. Instead of using "Salt River Valley Water Users Association" please replace all references with "SRP Water". The first three bullet items listed under this section should be re-written to the following: - Any part of a SRP Water facility is installed by forces other then SRP. - Placement of utility and / or excavating under a SRP Water facility. - Placement of utility and / or excavating parallel to and within eight feet of the centerline of a SRP Water ditch, pipeline or structure. The fourth bullet item should have the following change made: - Change "endanger" to "negatively impact". Please incorporate these changes into the revised manual. Again, these are only the requirements for constructing or crossing our facilities. This does not pertain to Bridge licenses or Land licenses.	1	These changes have been made.

*** RESPONSE: 1=Will Comply 2=Discussion or Clarification Required 3=No Change Required **D=Action Completed**

METRO Design Criteria Manual, Phase II
SUBMITTAL REVIEW COMMENTS

COMMENTS SUBMITTED		DISCIPLINE:	Engineering		
June 15, 2006		REVIEWER:	Mike James (METRO)		
REF. #	**PAGE**	**DWG, #SPEC SECTION**	**COMMENTS/FINDINGS**	**RESPONSE**	**ACTION**
64		1.1	Change "Metro LRT Project" to "Metro LRT Program" - This is for a 57 mile system program. Make consistent throughout document.	1	D
65		1.1	Refer to the "system" in this section, not a "corridor"	1	D
66		1.5	Why indicate single and double cars? Just state it accommodates up to 3-car trains.	1	D
67		2.2.1.1	The absolute station minimum width for a "16-foot" station is actually 16'-4". Please change. Verify minimum for your twelve-foot station as well. See section 6.3.3	1	D
68		3.4	Need a few sentences stating that it is the goal of the LRT Program to reduce the amount of right-of-way acquisitions for some of the following reasons: cost savings, reduced impacts to residents and businesses, supports our environment goals, and achieve FTA funding as it has become increasingly more difficult. Also, discuss how it is METRO's desire to implement light rail on a lane and NOT replace it with a travel lane. (In the Northwest Corridor, it is ridiculous that the City of Phoenix is replacing a lane on 19th Avenue where we are adding light rail transit service. Why is Metro paying the price so the City of Phoenix can provide a reliever service for ADOT's I-17?) This will become an increasingly important aspect if METRO wants to get any FTA dollars.	3	Local Governments are responsible for roads and laneage. No Action Required.
69		3.4.2.1	In the station section (page 3-16), change "landscape" to "landscape and enhanced landscaping at station areas"	1	D
70		3.6.3	Light rail streets are pedestrian streets, reduce the lane widths to 11 feet and do not show the 12'. This will slow traffic down making it safer for pedestrians and drivers. This, along with comment 3.4 will make the crosswalk distances shorter and safer and more accessible.	3	Roadway design is governed by Local Government's jurisdiction
71		3.6.4	Add a sentence that it desirable to limit and only add bus bays at major transit connection points, not every section mile road, etc.	3	Local Gov Jurisdiction /Public Transit

*** RESPONSE: 1=Will Comply 2=Discussion or Clarification Required 3=No Change Required **D=Action Completed**

METRO Design Criteria Manual, Phase II
SUBMITTAL REVIEW COMMENTS

COMMENTS SUBMITTED		DISCIPLINE:	Engineering		
June 15, 2006		REVIEWER:	Mike James (METRO)		
REF. #	**PAGE**	**DWG, #SPEC SECTION**	**COMMENTS/FINDINGS**	**RESPONSE**	**ACTION**
72		3.6.5	Add a statement that the replacement of paving is a non-5309 cost to the city, because they are receiving an enhancement.	1	Replacement of pavement will not always be a non-5309 cost, however in some circumstances it will, so this is appropriate
73		3.6.7	Add a sentence, on light rail streets where auto-oriented uses are transitioning; it is the desire of METRO to consolidate driveways and alleys to increase replacement parking and improve pedestrian facilities	3	This is governed by Local jurisdiction
74		3.6.8	It is a lie to say a 5-foot sidewalk is preferred. Change to state that an 8-foot sidewalk is preferred. This is consistent with the urban design guidelines and the TOD ordinances that the cities have adopted. Please understand that the cities of Tempe and Phoenix have adopted ordinances requiring 8-foot sidewalks along the LRT corridor.	1	D Comments have been incorporated into section.
75		6.2.1	Indicate if Glendale will require each of the types of review by building safety.	1	Referenced A/E to contact City of Glendale for requirements.
76		6.2.1	Show Glendale's applicable codes.	1	Referenced A/E to contact City of Glendale for requirements.

*** RESPONSE: 1=Will Comply 2=Discussion or Clarification Required 3=No Change Required **D=Action Completed**

METRO Design Criteria Manual, Phase II
SUBMITTAL REVIEW COMMENTS

COMMENTS SUBMITTED		DISCIPLINE:	Engineering		
June 15, 2006		REVIEWER:	Mike James (METRO)		
REF. #	**PAGE**	**DWG, #SPEC SECTION**	**COMMENTS/FINDINGS**	**RESPONSE**	**ACTION**
77		6.2.2.5	Define what is included in the Design Report.	1	Table of contents from Design Report is incorporated into the Design Criteria Manual.
78		6.2.2.6	This makes no sense. Metro pays for the permit fees, but the City pays METRO. So the City is paying for the permit fees twice (basically for staff who already have a dedicated salary.) This could be an opportunity for the cities to save money. Please indicate if fees are paid in all cities (Tempe, Mesa and Glendale).	3	Comment Noted, However, this cannot be addressed in the Design Criteria. This discussion should occur on a higher level.
79		6.3.4	First paragraph - indicated that this is for center station platforms. There are not always 2 paths on side platforms. Include a paragraph for side platform stations.	1	Paragraph added describing the side platform vs. center platform paths of travel.
80		6.3.4	Indicate that the path of travel shall meet all ADA requirements, etc.	1	D
81		6.4.6	Change "on the platform" to "per station platform". This addressed split station platforms.	1	D
82		6.4.10	Neighborhood map is optional. Please note.	1	D

*** RESPONSE: 1=Will Comply 2=Discussion or Clarification Required 3=No Change Required **D=Action Completed**

METRO Design Criteria Manual, Phase II
SUBMITTAL REVIEW COMMENTS

COMMENTS SUBMITTED		DISCIPLINE:	Engineering		
June 15, 2006		REVIEWER:	Mike James (METRO)		
REF. #	**PAGE**	**DWG, #SPEC SECTION**	**COMMENTS/FINDINGS**	**RESPONSE**	**ACTION**
83		6.4.12	METRO should have a dialogue to determine if CCTV are necessary or wanted on extensions. Suggest removing CCTV in extensions.	3	This discussion did take place and Arkady Bernshteyn is O.K. with the material as presented in the chapter.
84		6.4.14	Include a sentence that METRO will include public art consistently with the cities existing policy for funding art (typically about 1% of the construction is designated for public art, etc.)	1	D
85		6.7	Include guidelines for the vertical circulation (stairs, elevators) for the I-10 West stations that could convey patrons from bridges over I-10 down to a station in the median of the freeway.	3	This issue should be evaluated and established on a station by station basis.
86		6.8.3	Second to last bullet - change to, "At a minimum, 2 bike lockers and 2 sets..."	1	D
87		6.8.3	Last bullet - Strike and replace with, "At single ended stations, a city may request and pay for an extended platform length with a place for two bike racks on the emergency end of the platform. (The Dorsey Station is an example of this.)	1	D
88		6.8.5.2	Be consistent with use of hyphens. Use "park-and-ride". Check entire document.	1	D
89		6.8.5.3	Add a bullet - "Design the facility to minimize pedestrian crossings of vehicular lanes."	1	The last bullet states: "minimize points of conflict between pedestrian and vehicles.

*** RESPONSE: 1=Will Comply 2=Discussion or Clarification Required 3=No Change Required **D=Action Completed**

METRO Design Criteria Manual, Phase II
SUBMITTAL REVIEW COMMENTS

COMMENTS SUBMITTED		DISCIPLINE:	Engineering		
June 15, 2006		REVIEWER:	Mike James (METRO)		
REF. #	**PAGE**	**DWG, #SPEC SECTION**	**COMMENTS/FINDINGS**	**RESPONSE**	**ACTION**
90		6.8.6	Is CCTV in park-and-rides addressed? If not, add.	1	D
91		6.8.7	Steve Gottesman wrote a criteria memorandum indicating the number, type and spacing requirements of station signage. Please include the major points of this memo in this manual.	1	Signing has been added to this section of the chapter.
92		Add 6.8.8.2	Add the following section. 6.8.8.2 Station Vines – The following vines are approved fir use upon the station platforms. Any other vines must be tested for station application and approved by Valley Metro Rail. • Antigonon leptopus/Coral vine • Bougainvillea brasiliensis Hor./Bougainvillea Brasiliensis • Cissus Trifoliate/Arizona Grape Ivy • Ficus pumila/Creeping Ficus • Macfadyena unigus-cati/Cat's Claw • Mascagnia lilacina/Lavender Orchid Vine • Mascagnia macroptera/Yellow Orchid Vine • Merremia aurea' (Kellogg) O'Donnell'/Yellow morning glory • Parthenocissus 'Hacienda Creeper'/Hacienda Creeper • Pasiflora caerulea/Native Passion Vine • Podranea ricasoliana (tanfani) 'Sprague'/Pink Trumpet Vine • Rosa banksiae 'Alton'/Lady Bank's Rose • Vitus californica 'Roger Red'/California Grape	1	Reduced list of 8 vine types has been incorporated per directions from Steve Goettesman.
93		6.9.1.1	State that the cities of Phoenix, Tempe and Mesa have agreed that stations are not "buildings" and do not need to have fire sprinklers or fire extinguishers.	1	D

*** RESPONSE: 1=Will Comply 2=Discussion or Clarification Required 3=No Change Required **D=Action Completed**

METRO Design Criteria Manual, Phase II
SUBMITTAL REVIEW COMMENTS

COMMENTS SUBMITTED		DISCIPLINE:	Engineering		
June 15, 2006		REVIEWER:	Mike James (METRO)		
REF. #	**PAGE**	**DWG, #SPEC SECTION**	**COMMENTS/FINDINGS**	**RESPONSE**	**ACTION**
94		6.9.3	Include a section about approved paint and coatings.	3	Following completion of the initial phase of construction more data will be available to add a section for approved paint and coatings.
95		7.4.1.4	Page 7-13. Check the last two bullets, they essentially say the same thing, reroute to LRT. Is this correct?	1	D
96		10.5.10	Include section for data port (not just telephone).	1	D: Chapter 10 has been updated.
97		11.17	Change first bullet. Signal house are not to be pre-fabricated. Remove last sentence.	1	D
98		Add 12.2.7	Add 12.2.7 Irrigation System Communication section. Add the following points in the write-up: irrigation controllers can send data to the central computer/Cal-Sense system; system is fully compatible with Cal-Sense controllers; system is expandable; verify these issues with latest design.	1	D

*** RESPONSE: 1=Will Comply 2=Discussion or Clarification Required 3=No Change Required **D=Action Completed**

METRO Design Criteria Manual, Phase II
SUBMITTAL REVIEW COMMENTS

COMMENTS SUBMITTED		DISCIPLINE:	Engineering		
June 15, 2006		REVIEWER:	Mike James (METRO)		
REF. #	**PAGE**	**DWG, #SPEC SECTION**	**COMMENTS/FINDINGS**	**RESPONSE**	**ACTION**
99		13.3.7.4	Revise. We are not putting fare collection under canopies or shelters. There is a memorandum documenting preferred locations, orientation for N/S and E/W stations that considers slow and fast side of the station platform.	2	Revised to include verbage that TVM's should be placed in locations, "to ensure maximum operator response times, clear sight triangles, and unobstructed views of approaching station platforms."
100		14.1	Tenth bullet. Remove "in kind" from the sentence.	1	D
101		14.2.1	Fifth bullet - Not sure we need maps of the CP/EV line since this manual is for extensions. In 1), this is a Phoenix and Mesa standard. Tempe has a 9-foot sidewalk that includes tree grates, on Apache (add this).	1	This item was addressed and moved to Section 14.4.

*** RESPONSE: 1=Will Comply 2=Discussion or Clarification Required 3=No Change Required **D=Action Completed**

METRO Design Criteria Manual, Phase II
SUBMITTAL REVIEW COMMENTS

COMMENTS SUBMITTED		DISCIPLINE:	Engineering		
June 15, 2006		REVIEWER:	Mike James (METRO)		
REF. #	**PAGE**	**DWG, #SPEC SECTION**	**COMMENTS/FINDINGS**	**RESPONSE**	**ACTION**
102		14.4	Third bullet. Revise. Minimum sidewalk width is 8 feet in TOD Overlay areas. Change to state that an 8-foot sidewalk is preferred. This is consistent with the urban design guidelines and the TOD ordinances that the cities have adopted. Please understand that the cities of Tempe and Phoenix have adopted ordinances requiring 8-foot sidewalks along the LRT corridor.	1	Per Section 14 Focus Group Meeting, 5' width was discussed as being the minimum width. Revised to read that widths must meet minimum standard for each jurisdiction, and listed specific known requirements / preferences identified in these comments.
103		14.8	Approved station tree list was provided and included in the station section. Vine list is included in these comments.	1	D
104		15.6.6	This section is incorrect. We are not providing emergency lighting on outdoor stations.	1	D

*** RESPONSE: 1=Will Comply 2=Discussion or Clarification Required 3=No Change Required **D=Action Completed**

METRO Design Criteria Manual, Phase II
SUBMITTAL REVIEW COMMENTS

COMMENTS SUBMITTED		DISCIPLINE:	Engineering		
June __, 2006		REVIEWER:	James Slaker (METRO)		
REF. #	PAGE	DWG, #SPEC SECTION	COMMENTS/FINDINGS	RESPONSE	ACTION
105			Page 2-3. Back to Back Curves I think what is meant here is Broken Back Curves.	1	Changed to: "For curves orientated in the same direction, it is preferable to incorporate a single simple curve, compound curve(s) or compound spiral rather than have a short tangent between curves. If a tangent is required, the minimum tangent length requirement for the reverse curves will apply."
			Page 2-3. Station Platform Widths. Check with Gottesman. I believe some of these widths had to be increased on CP/EV due to ADA concerns.	1	D

*** RESPONSE: 1=Will Comply 2=Discussion or Clarification Required 3=No Change Required **D=Action Completed**

METRO Design Criteria Manual, Phase II
SUBMITTAL REVIEW COMMENTS

COMMENTS SUBMITTED		DISCIPLINE:	Engineering		
June __, 2006		REVIEWER:	James Slaker (METRO)		
REF. #	**PAGE**	**DWG, #SPEC SECTION**	**COMMENTS/FINDINGS**	**RESPONSE**	**ACTION**
105 cont.			Page 2-3. Tangent Alignment. The absolute minimum tangent is said to be 50 feet. But, on Page 2-7 it says, "Where extremely restrictive horizontal geometrics make it impossible to provide a sufficient tangent length between reversed super elevated curves the curves may meet at a point of reverse spiral upon approval... The 2-7 statement should be referenced after the "absolute minimum" on 2-3.	3	Different sections explaining different issues. One is specific to tangent lengths and the other explains the procedure between back to back spiral curves. Absolute minimum may vary and paragraph above table allows for width reduction with jurisdiction approval Check with jurisdiction

*** RESPONSE: 1=Will Comply 2=Discussion or Clarification Required 3=No Change Required **D=Action Completed**

METRO Design Criteria Manual, Phase II
SUBMITTAL REVIEW COMMENTS

COMMENTS SUBMITTED		DISCIPLINE:	Engineering		
June __, 2006		REVIEWER:	James Slaker (METRO)		
REF. #	**PAGE**	**DWG, #SPEC SECTION**	**COMMENTS/FINDINGS**	**RESPONSE**	**ACTION**
105 cont.			Page 3-18. One Lane with barrier curbs. Add 16' absolute minimum. Curb lane with parking. Add 17-foot absolute minimum. We have 16-foot frontage roads on Line Section 3. We also have 17-foot lane with parking on existing roadways in Line Section 3. Page 14-2. 8' sidewalks and 6-foot landscape strip should be from FACE of curb to far edge of sidewalk.	1 1 3	D D Sidewalk widths and landscape strips are often measured from back of curb depending on jurisdiction.

COMMENTS SUBMITTED		DISCIPLINE:	Engineering		
June 16, 2006		REVIEWER:	James Mathien (METRO)		
REF. #	**PAGE**	**DWG, #SPEC SECTION**	**COMMENTS/FINDINGS**	**RESPONSE**	**ACTION**
106			In Chapter 14 (Landscape), section 14.2.1, page 14-2, one of the bullets discussing median landscaping notes "avoid picket fence appearance". Please elaborate. Some may be unclear of the intent of this statement.	1	D

*** RESPONSE: 1=Will Comply 2=Discussion or Clarification Required 3=No Change Required **D=Action Completed**

METRO Design Criteria Manual, Phase II
SUBMITTAL REVIEW COMMENTS

COMMENTS SUBMITTED		DISCIPLINE:	Engineering - Landscaping		
June 16, 2006		REVIEWER:	Sandra Zwick (COP)		
REF. #	**PAGE**	**DWG, #SPEC SECTION**	**COMMENTS/FINDINGS**	**RESPONSE**	**ACTION**
107	Page 270	Section 14.2.1	Design Intent 3) Trees spaced	1	D
			Section 14.2.2 Pedestrian Shade, 2nd sentence - suggest revision as follows: Shade trees shall be used on the platforms due to their function as cooling mechanisms	1	D
			General comment - Trees should be measured in calipers not inch box size. A very small tree can be placed in a 24" box. A caliper measurement is taken 1 ft from the base and the trunk diameter is then measured. The size of the container has nothing to do with the size of the tree.	1	Added that the 'Minimum caliper shall be as specified in the ANA. Recommended Average Tree Specifications for the size and species specified.

COMMENTS SUBMITTED		DISCIPLINE:	Engineering		
June 16, 2006		REVIEWER:	Tom Godbee (COP)		
REF. #	**PAGE**	**DWG, #SPEC SECTION**	**COMMENTS/FINDINGS**	**RESPONSE**	**ACTION**
108			Chapter 2.0 2.2 second paragraph, last sentence –Should this read "maximum operating speed" instead of "maximum design speed" for the track alignment…? Design speeds are normally higher than posted speed limits. Shouldn't this be true for light rail, especially for side running operations?	1	Yes, design speeds are typically higher for safety reasons

*** RESPONSE: 1=Will Comply 2=Discussion or Clarification Required 3=No Change Required **D=Action Completed**

METRO Design Criteria Manual, Phase II
SUBMITTAL REVIEW COMMENTS

COMMENTS SUBMITTED		DISCIPLINE:	Engineering		
June 16, 2006		REVIEWER:	Tom Godbee (COP)		
REF. #	**PAGE**	**DWG, #SPEC SECTION**	**COMMENTS/FINDINGS**	**RESPONSE**	**ACTION**
108 cont.			2.2.1.1 Special Trackwork Add a sentence that mechanical switches should be kept out of crosswalks and other pedestrian areas.	3	This is mentioned in detail in section 4.6, Chapter 4, Trackwork.
			2.2.1.2 Circular Curves - ...except when the LRT (change to LRV).	3	It is LRT trackwork and not the Light Rail Vehicle.
			2.3.4 Vertical Clearance – indicate that special high voltage warning or overhead clearance signing may be warranted at bridge under crossings with OCS attachments.	3	This should be added to the Catenary section of the Manual.
			Chapter 3.0 3.6.1 General - New facilities shall be designed in conformance with "the most current" standards....Replace-in-kind may require upgrades to meet the current standards.	1	D

*** RESPONSE: 1=Will Comply 2=Discussion or Clarification Required 3=No Change Required **D=Action Completed**

METRO Design Criteria Manual, Phase II
SUBMITTAL REVIEW COMMENTS

COMMENTS SUBMITTED		DISCIPLINE:	Engineering		
June 16, 2006		REVIEWER:	Tom Godbee (COP)		
REF. #	**PAGE**	**DWG, #SPEC SECTION**	**COMMENTS/FINDINGS**	**RESPONSE**	**ACTION**
108 cont.			3.6.6 Curbs and Curb Cuts – second paragraph, .. Curb returns "at signalized intersections" shall be 35-foot radii, as necessary, to prevent encroachment of large vehicles onto the trackway. A turning radius template should be used to identify potential track encroachments of large vehicles	1	3.6.6: Local jurisdiction standard. This covers non-signal intersections as well.
				1	3.6.6: placed "at signalized intersections" in text. Also, "turn template designs shall be used where large truck movements occur".
			3.6.7 Driveways – "Driveways should not be added for vacant lots	1	D
			3.6.8 Sidewalks – Streetscapes should be designed so that street light, power, guy wire, OCS and other poles should be keep out of sidewalks whenever possible, or the sidewalk widened to maximize clear paths for pedestrians.	1	D

*** RESPONSE: 1=Will Comply 2=Discussion or Clarification Required 3=No Change Required **D=Action Completed**

METRO Design Criteria Manual, Phase II
SUBMITTAL REVIEW COMMENTS

COMMENTS SUBMITTED		DISCIPLINE:	Engineering		
June 16, 2006		REVIEWER:	Tom Godbee (COP)		
REF. #	**PAGE**	**DWG, #SPEC SECTION**	**COMMENTS/FINDINGS**	**RESPONSE**	**ACTION**
108 cont.			Chapter 16 Traffic Control 16.5 Control of Train Interface with Traffic – add to last paragraph – Pedestrian prohibition signing may be required at locations where it is not safe or crossings are not accessible.	1	D Chapter 16 Traffic Control 16.5 Control of Train Interface with Traffic – added to last paragraph. Pedestrian prohibition signing may be required at locations where it is not safe or crossings are not accessible.

*** RESPONSE: 1=Will Comply 2=Discussion or Clarification Required 3=No Change Required **D=Action Completed**

METRO Design Criteria Manual, Phase II
SUBMITTAL REVIEW COMMENTS

COMMENTS SUBMITTED		DISCIPLINE:	Engineering		
June 16, 2006		REVIEWER:	Manny Diaz & Maria Hyatt (COP)		
REF. #	**PAGE**	**DWG, #SPEC SECTION**	**COMMENTS/FINDINGS**	**RESPONSE**	**ACTION**
109			A survey is required to establish and identify the existing right-of-way condition prior to any new right-of-way requirements being determined. Right-of-way surveys is the composite total requirement of all interests and uses of real property needed to construct, maintain, protect and operate the transit system. Some right-of-way survey requirements are temporary and revisionary in nature, while other requirements are permanent as dictated by operating needs. The intent is to acquire and maintain the minimum right-of-way required consistent with the requirements of the system and good right-of-way practices. Because right-of-way plans are used as a basis for acquisition of property, all interests and uses shall be known on the right-of-way plans together with the detailed property dispositions. A physical survey is to be performed at the site and is to be provided for every parcel of land affected by a right of way acquisition identifying the right of way to be acquired and the remainder of the parcel. The right of way to be acquired is to be marked (painted or staked) on the property in a manner that will clearly identify the right of way being acquired and any improvements lying within said right of way being acquired. A title report required for all property is to be acquired by METRO. The taking envelope is influenced by the topography, drainage, ditches, retaining walls, service roads, utilities, and the nature of the structure and side slope selected.	1	Incorporated portions of this paragraph in the text.

*** RESPONSE: 1=Will Comply 2=Discussion or Clarification Required 3=No Change Required **D=Action Completed**

METRO Design Criteria Manual, Phase II
SUBMITTAL REVIEW COMMENTS

COMMENTS SUBMITTED		DISCIPLINE:	Engineering		
June 16, 2006		REVIEWER:	Chuck Italiano & Mark Melnychenko		
REF. #	**PAGE**	**DWG, #SPEC SECTION**	**COMMENTS/FINDINGS**	**RESPONSE**	**ACTION**
110			Public Transit – no comments	3	

COMMENTS SUBMITTED		DISCIPLINE:	Engineering		
June 16, 2006		REVIEWER:	David Hignite ("METRO)		
REF. #	**PAGE**	**DWG, #SPEC SECTION**	**COMMENTS/FINDINGS**	**RESPONSE**	**ACTION**
111			The following comments apply to Procedure ENG-003 at the back of the book. • Form for the procedure is out of date and does not reflect proper approval signatures. April should be able to help with this. • Titles are not correct, Section. 3.0. "The Division Director" should be more specific. • The "Metro Project Manager" does not appear on our org. chart. Need to clarify who this is. • Subsection 4.3, last paragraph. Who is "FM"? • Subsection 4.4 states, "Project designers are responsible for.....". This should read, "Design contracts shall require project designers to....."	1	D Facilities Manager

*** RESPONSE: 1=Will Comply 2=Discussion or Clarification Required 3=No Change Required **D=Action Completed**

METRO Design Criteria Manual, Phase II
SUBMITTAL REVIEW COMMENTS

COMMENTS SUBMITTED		DISCIPLINE:	Engineering		
June 20, 2006		REVIEWER:	Ray Almanzar (METRO)		
REF. #	**PAGE**	**DWG, #SPEC SECTION**	**COMMENTS/FINDINGS**	**RESPONSE**	**ACTION**
112			Page 3-2, section 3.2.1 first paragraph sentence "Access for construction or maintenance purposes to the way shall be restricted to the LRT personnel only or to others under the direction of authorized LRT personnel." Is way the same as trackway? Did not see a definition for way is one needed?	1	Guideway to be used for way and trackway throughout
			2. Page 3-6 section 3.2.5 bullet point 4 web address WATERSERVICES/standards:hmtl, is standards misspelled?	1	D
			3. Page 3-19 section 3.6.4 "Bus bay design shall reference MAG Standard Detail No. 252.....". COP has their own bus bay details 1256-1 etc. which states the width could be reduce to 10' only if approved by the City.	1	Revised to add "local authority"
			Section 3.6.5 Paving "Paving replacement, whether total reconstruction, replacement of roadway cross section or a pavement overlay, shall be evaluated on a case by case basis." It should be evaluated by both the Agency and the City.	3	D
			Section 3.6.6, remove last sentence in first paragraph allowing 6" curb face to be reduce to 4". It should be handled on a case by case basis through the design exception process.	3	Subject to approval
			4. Page 3-20 section 3.6.8 first paragraph would like to see a sentence here stating that the placement of fire hydrants, OCS poles, bike racks, etc. will not reduce the width of the new or existing sidewalk.	1	D
			Survey and Civil Monumentation figures 3-1 and 3-2 did not include notes 3 and 4 as called out in the exhibit.	1	D
			Do we need something in the DCM addressing the requirement of two-sided street lighting along the alignment?	1	See Chapter 15
			Did not see a requirement for a drainage report. How is this to be handled?	1	D

*** RESPONSE: 1=Will Comply 2=Discussion or Clarification Required 3=No Change Required **D=Action Completed**

METRO Design Criteria Manual, Phase II
SUBMITTAL REVIEW COMMENTS

COMMENTS SUBMITTED		DISCIPLINE:	Engineering		
June 23, 2006		REVIEWER:	Brian Buchanan (METRO)		
REF. #	**PAGE**	**DWG, #SPEC SECTION**	**COMMENTS/FINDINGS**	**RESPONSE**	**ACTION**
113	3-2	3.2.1	Remove last sentence "The City..."	1	Sentence to be retained but modified to include 5309 reference
114	3-3	3.2.2	Fifth bullet: Need an exception on bullet item stating "...be a minimum a 4 feet below top of rail; and	1	D
115	3-3	3.2.2	Eight bullet: Change way to guideway	1	D
116	3-4	3.2.3	RUA Requirements (Water and Sewer) should not be in DC (or at least the 16' rule part.	3	Needs to be included
117	3-7	3.2.8	All references to a GEC should be removed. There may be a time we do not have a GEC.	1	D
118	3-8	3.2.10	60 Percent submittal	3	Normal SRP procedure
119	3-10	3.3.4	Are these in the respective cities design criteria's? If so, do we need to state in here? What is it they update?	1/3	Reference to latest/current criteria added.
120	3-11	3.3.6	Same as previous comment	1/3	As above
121	3-11 & 3-12	3.3.8	Same as previous comment	1/3	As above
122		Figure 3-3	?	3	
123		Figure 3-4	Why 25' (looks like a Class I RR std)	3	OK to show
124		Figure 3-4	Need embedded detail	1	Added detail
125	4-1	4.2	Change sentence per redlines	1	D
126	4-7	4.5.2	Not Douglas Fir; all concrete	1	D
127	4-7	4.5.3	High strength rail: Really? Why not just curves, station platforms and high braking areas?	1	The "other" areas of high maintenance and high costs for the changeouts.

*** RESPONSE: 1=Will Comply 2=Discussion or Clarification Required 3=No Change Required **D=Action Completed**

METRO Design Criteria Manual, Phase II
SUBMITTAL REVIEW COMMENTS

COMMENTS SUBMITTED		DISCIPLINE:	Engineering		
June 23, 2006		REVIEWER:	Brian Buchanan (METRO)		
REF. #	PAGE	DWG, #SPEC SECTION	COMMENTS/FINDINGS	RESPONSE	ACTION
128	4-8	4.5.4	U69: Buy America Issue	1	The U69 may be available in the US at some time and will be a better alternative to a tee rail guardrail.
129	4-10	4.5.11	Compromise Joints add Transition Rails in parenthesis	1	D
130	4-11	4.6	We do not want Std RR to mark in embedded trackwork	1	D
131	4-11	4.6	Conventional timber switch: No! concrete ties.	1	D
132	4-14	4.6	We have no bolted TO's on 1st phase, why now?	3	As discussed with B. Buchanan. The yard track is subject to very slow speeds and less wear plus typically noise is not an issue. Bolted joints in the yard turnouts should be acceptable.
133	4-15	4.7	Add concrete (between conventional and railroad)	1	The crossing panels can be all three, either rubber, wood/asphalt.
134	4-15	4.7	Remove "including proprietary..." part of sentence	1	D

*** RESPONSE: 1=Will Comply 2=Discussion or Clarification Required 3=No Change Required **D=Action Completed**

METRO Design Criteria Manual, Phase II
SUBMITTAL REVIEW COMMENTS

COMMENTS SUBMITTED		DISCIPLINE:	Engineering		
June 23, 2006		REVIEWER:	Brian Buchanan (METRO)		
REF. #	**PAGE**	**DWG, #SPEC SECTION**	**COMMENTS/FINDINGS**	**RESPONSE**	**ACTION**
135		Figure 4-5	Where did this design come from?	3	Okay as per B. Buchanan
136		Figure 4-7	Shouldn't this be 132# rail?	1	D
137		Figure 4-11	Typo – see redlines	1	D
138		Figure 4-12	Typo – see redlines	1	D
139	5-5	5.8	Change and Tempe areas to Metropolitan area.	1	D
140	6-2	6.2.1	Add latest between The and governing. Remove of Phoenix, Tempe and Mesa Remove 2003 on 1st seven bulleted items Change Phoenix/Tempe/Mesa building to City Remove sentence after 'with', replace with City Supplements	1	D
141	14-2	14.2.1	Paced should be spaced	1	D
142	14-3	14.2.3	Remove last part of sentence after 'provided'	1	Revised 2nd sentence to read: 'Provide a minimum of 48 square feet of exposed soil per tree.' Removed remainder of sentence.
143	14-3	14.2.5	"Structural soil shall be used in all raised planters" – No!	1	D
144	14-7	14.8	Remove (TO INCLUDE DETAIL	1	D

COMMENTS SUBMITTED		DISCIPLINE:	Engineering		
June 23, 2006		REVIEWER:	Alvin Livingstone (METRO)		
REF. #	**PAGE**	**DWG, #SPEC SECTION**	**COMMENTS/FINDINGS**	**RESPONSE**	**ACTION**
145	3-3	3.2.2	Add Restricted Utility Area & put RUA in parenthesis	1	D
146	3-3	3.2.2	Change Authority to METRO throughout manual	1	D
147	3-4	3.2.2.	Change Authority to METRO	1	D

*** RESPONSE: 1=Will Comply 2=Discussion or Clarification Required 3=No Change Required **D=Action Completed**

METRO Design Criteria Manual, Phase II
SUBMITTAL REVIEW COMMENTS

COMMENTS SUBMITTED		DISCIPLINE:	Engineering		
June 23, 2006		REVIEWER:	Alvin Livingstone (METRO)		
REF. #	PAGE	DWG, #SPEC SECTION	COMMENTS/FINDINGS	RESPONSE	ACTION
148	3-4	3.2.3	Change Authority to METRO	1	D
149	3-5	3.2.4	Change Authority to METRO	1	D
150	3-5	3.2.4	Change Regional Public Transit Authority to Valley Metro Rail, Inc.	1	D
151	3-6	3.2.6	Change The Authority to Design Engineer	1	D
152	3-6	3.2.7	Change the Authority to METRO	1	D
153	3-6	3.2.7	End sentence after the word review.	1	D
154	3-6	3.2.7	Change The Authority to Design Engineer	1	D
155	3-6	3.2.7	Change 30 percent to draft	1	D
156	3-7	3.2.7	Change The Authority to METRO	1	D
157	3-7	3.2.8	Change the GEC to Design Engineer	1	D
158	3-7	3.2.8	Change Authority to METRO throughout 3.2.8	1	D
159	3-8	3.2.8	Add The Design before Consultant	1	D
160	3-8	3.2.8	Add design before consultant	1	D
161	3-8	3.2.10	Add Water/Irrigation after SRP in title NOTE: We need to differentiate between water and power. This section seems more applicable to water.	1	D
162	3-8	3.2.10	Add (8) after eight NOTE: add sketch provided by SRP – see R. Alvarado.	1	D
163	3-8	3.2.11	Charge the taking envelope to The Amount of Right of Way NOTE: Does this belong here? Perhaps under R/W section.	1	Was removed.
164	3-9	3.3	Change the Authority to METRO	1	D
165	3-9	3.3.1	A drainage report will be required that will identify whether the existing drainage system is adequate, and to determine what modification will be required for LRT improvements.	1	A statement discussing drainage report was included.
166	3-9	3.3.1	Catch basins may be upgraded to capture the additional volume created by light rail. METRO will not upgrade existing storm drain system that is already undersized.	1	Must meet current criteria if modifying
167	3-11	3.3.7	Change Authority to METRO	1	D
168	3-11	3.3.7	Change Authority to METRO	1	D
169	3-12	3.3.8	Change font size	1	D
170	3-12	3.3.9	Why? These are concrete pipes. NOTE: I don't think this belongs here.	1	D

*** RESPONSE: 1=Will Comply 2=Discussion or Clarification Required 3=No Change Required **D=Action Completed**

METRO Design Criteria Manual, Phase II
SUBMITTAL REVIEW COMMENTS

COMMENTS SUBMITTED		DISCIPLINE:	Engineering		
June 23, 2006		REVIEWER:	Alvin Livingstone (METRO)		
REF. #	PAGE	DWG, #SPEC SECTION	COMMENTS/FINDINGS	RESPONSE	ACTION
171	3-13	3.3.13	Remove as	1	D
172			GENERAL COMMENT: remove all reference to Authority	1	D
173	3-14	3.4	Change Authority to METRO	1	D
174	3-14	3.4.1.3	Add Construction after Temporary and (TCE) after title	1	D
175	3-15	3.4.1.5	Add 3.4.1.5 Traffic Easements – These easements may be used for conduits, j-boxes, and loop detectors in areas sufficient ROW is not available.	1	D
176	3-19	3.6.4	Change agency to department	1	D
177		Figure 3-1	Where is Note 3?	1	Added
178		Figure 3-1	Where is Note 4?	1	Added
179		Figure 3-4	Change Authority to METRO	1	D
180		Figure 3-5	NOTE: Traffic lane width should be consistent with lane width reference in chapter 3.6.3 "Traffic Lane Width"	1	D
181		Figure 3-6	Stantec to verify that traffic lane width is consistent with that of Section 3.6.3.	1	D

COMMENTS SUBMITTED		DISCIPLINE:	Engineering		
June 23, 2006		REVIEWER:	Barry Mora and Larry Isaac (METRO)		
REF. #	PAGE	DWG, #SPEC SECTION	COMMENTS/FINDINGS	RESPONSE	ACTION
182	3-14	3.4	Remove "and" (between utilize and good)	1	D
183	3-14	3.4	3rd paragraph: use commas instead of semicolons	1	D
184	3-14	3.4	Remove semicolon after drainage	1	D
185	3-14	3.4.1.1	Remove "a" between so and legal	1	D
186	3-14	3.4.1.2	Add s to description	1	D
187	3-14	3.4.1.2	Add 'but not limited to' between including and access	1	D
188	3-14	3.4.1.2	Remove a between so and legal	1	D
189	3-14	3.4.1.2	Add s to description	1	D
190	3-14	3.4.1.2	Change U in Upper to lowercase	1	D
191	3-14	3.4.1.3	Add 'the' between for and contractor	1	D
192	3-14	3.4.1.3	Repairs of any damages in the TCE area shall be done prior to their return.	1	D
193	3-15	3.4.1.4	Sentence repeated	1	D

*** RESPONSE: 1=Will Comply 2=Discussion or Clarification Required 3=No Change Required **D=Action Completed**

METRO Design Criteria Manual, Phase II
SUBMITTAL REVIEW COMMENTS

COMMENTS SUBMITTED		DISCIPLINE:	Engineering		
June 23, 2006		REVIEWER:	Barry Mora and Larry Isaac (METRO)		
194	3-15	3.4.2.1	"and shall be modified" ??	1	D
195	3-16	3.4.2.1	"additional easements..." Perm or temp?	3	both
196	3-16	3.4.2.1	Comma after facilities instead of a period	1	D
197	3-16	3.4.2.1	Make s in "such" lower case	1	D
198	3-16	3.4.2.1	Parenthesis around "such as kiosk..."	1	D
199	3-16	3.4.2.1	Add "s" to rack	1	D
200	3-16	3.4.2.1	Comma after parenthesis	1	D
201	3-16	3.4.3	Change for to "to allow the"	1	D
202	3-17	3.5	Capitalize R in record and D in Decision	1	D
203	3-17	3.5	Change 'indicate the start time for' to allow	1	D

COMMENTS SUBMITTED		DISCIPLINE:	Engineering		
June 23, 2006		REVIEWER:	Wulf Grote (METRO)		
REF. #	PAGE	DWG, #SPEC SECTION	COMMENTS/FINDINGS	RESPONSE	ACTION
204	3-5	3.2.4	Change Regional Public Transit Authority to VMR?	1	D
205	3-7	3.2.8	GEC: future projects may not have a GEC	1	Design Eng.
206		Figure 4-1	Given the embedded track is our standard, shouldn't we have a similar sketch for embedded?	1	Fig. 3-10
207		Figure 4-5	Should we reconsider T-rail given the potential for significant cost savings?	3	A cost benefit study should be undertaken. It may be that the tee rail plus guarding and isolation boot is more expensive than the single girder rail

*** RESPONSE: 1=Will Comply 2=Discussion or Clarification Required 3=No Change Required **D=Action Completed**

METRO Design Criteria Manual, Phase II
SUBMITTAL REVIEW COMMENTS

COMMENTS SUBMITTED		DISCIPLINE:	Engineering		
June 23, 2006		REVIEWER:	Wulf Grote (METRO)		
REF. #	PAGE	DWG, #SPEC SECTION	COMMENTS/FINDINGS	RESPONSE	ACTION
208		6-13	Why aren't we addressing size and dimensions of parking spaces?	3	Parking spaces vary depending on the municipality.
209		9-1	This was clearly written for initial MSF w/CP/EV project. This section should address Design Criteria for expansion of existing site and future sites.	1	Agreed, the final report if it is to include maintenance facility needs to address light maintenance facilities.
COMMENTS SUBMITTED		DISCIPLINE:	Engineering		
June 23, 2006		REVIEWER:	Gregg Kent (City of Tempe)		
REF. #	PAGE	DWG, #SPEC SECTION	COMMENTS/FINDINGS	RESPONSE	ACTION
210		Survey	Meet with local jurisdictions prior to beginning survey work to discuss local concerns and ties to local horizontal and vertical control	1	D
211		Figures 3-1 and 3-2	Monument ties should not be located in the center of sidewalk curb ramps, perhaps at the back or in the ramp curb at the back	1	D
212		Figures 3-1 and 3-2	Notes 3 and 4 are missing	1	D
213		Figures 3-1 and 3-2	Remove number of lane callouts	1	D
214		Government Utilities	Recommend assuming the project will have to relocate any government utilities that do not belong to the local jurisdiction i.e. ADOT or ASU	1	A statement about coordination was included.
215		Drainage	Coordinate drainage study and outfalls with local jurisdiction and their drainage master plans	1	A statement about coordination was included.

*** RESPONSE: 1=Will Comply 2=Discussion or Clarification Required 3=No Change Required **D=Action Completed**

METRO Design Criteria Manual, Phase II
SUBMITTAL REVIEW COMMENTS

COMMENTS SUBMITTED		DISCIPLINE:	Engineering		
June 23, 2006		REVIEWER:	Gregg Kent (City of Tempe)		
REF. #	PAGE	DWG, #SPEC SECTION	COMMENTS/FINDINGS	RESPONSE	ACTION
216		Drainage	Assume any onsite retention volume lost to roadway widening will need to be replaced	1	A statement about lost retention volume was included.
217		Sidewalks	8' wide arterial 6' collector	1	Added to text in Section 14.4
218		Curb & Gutter	7" high curb arterial, 6" high curb collector	1	D
219		Landscaping	Enhanced landscaping at stations 14' s/w with 6' tree grates	1	Added to text in Section 14.4
220		Landscaping	Maximize shade to sidewalks, park and rides	1	Modified 14.1, second bullet to read: 'Place trees and other plantings to maximize shading and screening opportunities and provide a more comfortable climate for the rail passenger'.

COMMENTS SUBMITTED		DISCIPLINE:	Engineering		
June 23, 2006		REVIEWER:	Al Field		
REF. #	PAGE	DWG, #SPEC SECTION	COMMENTS/FINDINGS	RESPONSE	ACTION
221			Please add RUA to the list of Definitions & Terms.	1	D
222			It would be helpful if all "bullets" are numbered.	1	D

*** RESPONSE: 1=Will Comply 2=Discussion or Clarification Required 3=No Change Required **D=Action Completed**

METRO Design Criteria Manual, Phase II
SUBMITTAL REVIEW COMMENTS

COMMENTS SUBMITTED		DISCIPLINE:	Engineering		
June 23, 2006		REVIEWER:	Al Field		
REF. #	PAGE	DWG, #SPEC SECTION	COMMENTS/FINDINGS	RESPONSE	ACTION
223			Under additional water and sewer design requirements on page 3-4,	3	No
224			Why is by-pass pumping listed in the 3.2.2 RUA Requirements? This us more of a construction-related activity	3	May be in design also
225			"Permits shall be obtained ...." Is a normal design activity for water and sewer and not necessary.	3	
226			"Water and sewer services only provided ...." Is an incomplete sentence and has no meaning.	1	D
227	3-4	3.2.3	Under 3.2.3 Water on page 3-4, I believe there is a requirement that water services are at 90 degrees to the main.	3	Standard, no need to state
228	3-4	3.2.3	Under 3.2.3 Sewer on page 3-4, I believe the wording should say manholes on each side of the RUA for sewer crossings.	1	D
229	3-5		On page 3-5, Sewer continued, "flexible connectors" and "short lengths of sewer service pipe" are very ambiguous.	3	Agreed, but criteria from B&C is vague.
230	3-5		On page 3-5, Sleeves are generally 12" larger than carriers. The note regarding "Water service pipe sleeves" should be listed as an exception to this rule rather than a stand-alone bullet that contradicts this requirement.	1	D
231			Consider "All pipes should be (continuous or) restrained through sleeves.	1	D
232			What kind of end seals and how frequently "shall" the spacers be placed?	3	Per COP 16-ft rule criteria
233			Private Utility Companies - U.S. West Communications has been called Qwest for several years.	1	D
234			Utility Abandonment - A utility segment that ceases to be active.	3	
235			Why are the SRP Design Guidelines included in "Utility Design Reference"? If SRP, why not others?	3	Designed by METRO consultant, others are by the utility company
236	3-7		On Page 3-7, why would a Government Design Engineer prepare a permit application for installation of his facilities in his City?	1	This section was re-written

*** RESPONSE: 1=Will Comply 2=Discussion or Clarification Required 3=No Change Required **D=Action Completed**

METRO Design Criteria Manual, Phase II
SUBMITTAL REVIEW COMMENTS

COMMENTS SUBMITTED		DISCIPLINE:	Engineering		
June 23, 2006		REVIEWER:	Al Field		
REF. #	PAGE	DWG, #SPEC SECTION	COMMENTS/FINDINGS	RESPONSE	ACTION
237		3.2.8	In 3.2.8, where is GEC defined? Please add it to the definitions.	3	GEC was removed
238	3-8		On Page 3-8, I propose the following change. "Proposed for construction by (Utility Name) prior to _____ . Date of proposed METRO project bid advertisement shall be inserted	1	New data was provided
239		3.2.10	The Title for Item 3.2.10 should be clarified to define if this refers to SRP Irrigation or SRP Power.	1	D
240		3.2.1.1	Item 3.2.11 should say "May be called by the Consultant ...conflicts with the Utilities."	1	D
241		3.2.1.1	Item 3.2.11, what in the heck is a "taking envelope" and how does it apply to utility coordination meetings?	1	Was removed

COMMENTS SUBMITTED		DISCIPLINE:	Engineering		
June 23, 2006		REVIEWER:	Ross Renner (City of Mesa)		
REF. #	PAGE	DWG, #SPEC SECTION	COMMENTS/FINDINGS	RESPONSE	ACTION
242		Section 3.2.7	1st paragraph, add natural gas to the list of utilities in 1st sentence, and add storm drain and natural gas to the list of utilities in 2nd sentence. 3rd and 4th paragraph, never heard of the term "utility futures" to define future facilities. Suggest you define in the definitions.	1	Section was revised to include natural gas in Mesa.
243		Section 3.2.8 5th paragraph	Private utility plans are to be reviewed and approved, and a right-of-way permit issued by the COM for utilities in COM public right-of-way.	1	D
244		Section 3.3.4 3rd paragraph	COM allows spread to outside traffic lane only, not one dry lane.	1	D
245		Section 3.3.8:	COM will not allow CIPP in the vicinity of LRT projects. Use only RGRCP.	1	D

*** RESPONSE: 1=Will Comply 2=Discussion or Clarification Required 3=No Change Required **D=Action Completed**

METRO Design Criteria Manual, Phase II
SUBMITTAL REVIEW COMMENTS

COMMENTS SUBMITTED		DISCIPLINE:	Engineering		
June 23, 2006		REVIEWER:	Paul Driver (City of Phoenix)		
REF. #	PAGE	DWG, #SPEC SECTION	COMMENTS/FINDINGS	RESPONSE	ACTION
246		Chapter 3	General – We need a subsection called Survey Layout where we detail 50 foot cross sections, finish floor elevations stationing, water valve nut elevations, rim and inverts, grade breaks etc. See City of Phoenix Administrative Procedure (AP) -1 for language. Laura Fritschi or Ralph Goodall (ph. 495-2050) can provide the latest copy.	1	D Added a new section 3.1.4: "Design Surveys"
247		Section 3.1.4 Trackway	Please add the following: [Unless 100 year design drainage crossings or protection is present trackway elevations should be set a preferred 20-inches and a minimum 12-inches below the lowest adjacent finished floor upstream from the track. This should be done to ensure that the highest curb or rail is a minimum 6-inches below the adjacent floors.]	1	D Added to Section 3.3.4
248		Section 3.3.4 Storm Drain Design	Please replace the first sentence in the second paragraph with the following: "Off site criteria for storm drain design generally covers retention basin sizing for those developments not within the street right of way."	1	D
249		Section 3.3.5 Minimum Velocities	Please add the following: "Minimum velocities in the City of Phoenix are 5fps for the design flow and 3fps for ½ design flow."	1	D
250		Section 3.3.8 Pipe Material and Loading	Add the following: A field review of existing pipe material shall include obtaining all available as-built information on existing storm drains within 10 feet of the track and a thoroughly documented video of the existing pipe using light rail line stationing prior to final design. If material is cast in place or metal pipe or there is evidence of cracking or less than Class III pipe installation cores shall be taken at a minimum 500 foot intervals in both upper and lower regions of the pipe to insure concrete thickness and integrity. In sections of less than 6-foot cover a second video of hand tested crack thickness evaluation must be done after initial rail bed compaction and prior to placing concrete or ballast.	1	D
251		Section 3.3.8 Pipe Material and Loading, City of Phoenix Section	Add the following: "Precast pipe will be RGRCP per ASTM C-76. Loading design shall be per City of Phoenix Storm Water Policies Manual Chapter 6.4 using positive projection loading 140 lb/cu. ft. soil load substituting track bedding dead loads and rail car live dynamic loading conditions.	1	D

*** RESPONSE: 1=Will Comply 2=Discussion or Clarification Required 3=No Change Required **D=Action Completed**

METRO Design Criteria Manual, Phase II
SUBMITTAL REVIEW COMMENTS

COMMENTS SUBMITTED		DISCIPLINE:	Engineering		
Jan. 25, 2007		REVIEWER:	Rob Hardy/QWEST		
REF. #	PAGE	DWG, #SPEC SECTION	COMMENTS/FINDINGS	RESPONSE	ACTION
252			Qwest would like a clarification on 3.2.8 where it talks about utilities submitting plans as mylar or cadd/files. We do not use mylar and would like that to also include standard multipurpose paper. Currently we send in 11 X 17 20lb 20M type paper. Not all of Qwest's jobs will be sent in as a cadd file, though they may be drawn in cadd.	1	D This comment has been addressed and the text has been changed to "Utilities shall be required to provide appropriate size reproducible drawings and/or CADD files". METRO would like to receive CADD files whenever they are available. With current technology, paper prints are acceptable as reproducible plans.

*** RESPONSE: 1=Will Comply 2=Discussion or Clarification Required 3=No Change Required **D=Action Completed**

METRO Design Criteria Manual, Phase II
SUBMITTAL REVIEW COMMENTS

COMMENTS SUBMITTED		DISCIPLINE:	Engineering		
Feb. 5, 2007		REVIEWER:	Rob Hardy/QWEST		
REF. #	PAGE	DWG, #SPEC SECTION	COMMENTS/FINDINGS	RESPONSE	ACTION
253			Design of new utilities must be designed in such a manner as not to conflict with other existing non-conflicting utilities. One utility should not have to relocate existing facilities to accommodate the placement of another utility, unless no other option exists.	3	Section 3.2.8 indicates that METRO and the consultant will work with the Private utility companies to determine locations for all utilities. It is practical that utilities will only be relocated if required. No modification to the manual has been completed.
254			If an existing utility is required to relocate from an existing private easement, another private easement may be required to accommodate such relocation. VMR would be responsible for buying that easement as well as repaying the original cost to purchase the easement vacated.	3	Agreed, but that is outside of the scope of the manual. Therefore no modification to the manual has been completed.

*** RESPONSE: 1=Will Comply 2=Discussion or Clarification Required 3=No Change Required **D=Action Completed**

METRO Design Criteria Manual, Phase II
SUBMITTAL REVIEW COMMENTS

COMMENTS SUBMITTED		DISCIPLINE:	Engineering		
June 23, 2006		REVIEWER:	Rob Hardy/QWEST		
REF. #	PAGE	DWG, #SPEC SECTION	COMMENTS/FINDINGS	RESPONSE	ACTION
255			Whenever possible, catch basins, lateral connector pipes, etc. are to be designed to avoid conflicts with the other utilities. We had cases where standard catch basins where used only to be redesigned later to avoid conflict with a buried utility. These could have been designed right the first time, thereby avoiding new design fee.	3	Agreed. However it is important to realize that the catch basin leads are often more restricted than other utilities for grade and therefore cannot be moved. As indicated in Number 253 above, relocation of utilities will only be completed if required. Please note that it is important that private utility plans are provided to METRO and their consultant as soon as possible so that potential conflicts can be identified early. No modification to the manual has been completed.

*** RESPONSE: 1=Will Comply 2=Discussion or Clarification Required 3=No Change Required **D=Action Completed**

METRO Design Criteria Manual, Phase II
SUBMITTAL REVIEW COMMENTS

COMMENTS SUBMITTED		DISCIPLINE:	Engineering		
Feb. 05, 2007		REVIEWER:	Rob Hardy/QWEST		
REF. #	PAGE	DWG, #SPEC SECTION	COMMENTS/FINDINGS	RESPONSE	ACTION
256			Existing utilities crossing the track be addressed on a case-by-case basis to determine whether a variance can be granted to remain in place rather than relocate or lower. In some cases it may be impossible to lower the facility due to other conflicts.	1	Agreed. As indicated in Section 3.2.2. "On a case-by-case basis under certain circumstances, METRO may allow deviations from the RUA Requirements. The consultant/private utility shall prepare a Request for Revision/Deviation to the Design Criteria Manual for submittal to METRO for approval outlining why the deviation is required. (See Appendix B). The Consultant/private utility shall not proceed with the design until approval is received from METRO for the deviation."

*** RESPONSE: 1=Will Comply 2=Discussion or Clarification Required 3=No Change Required **D=Action Completed**

METRO Design Criteria Manual, Phase II
SUBMITTAL REVIEW COMMENTS

COMMENTS SUBMITTED		DISCIPLINE:	Engineering		
Jan. 31, 2007		REVIEWER:	Bruce Souder/SRP		
REF. #	PAGE	DWG, #SPEC SECTION	COMMENTS/FINDINGS	RESPONSE	ACTION
257			Section 3.2.8 states that "utilities shall be required to provide appropriate size drawings on mylar and/or CADD files". With the current DDA tool this will not be possible. SRP will only be able to provide .pdf, hard copy, or raster image .dwg files with associated .tif files that result from scanning.	3	See our response above to Qwest comment No. 252.
COMMENTS SUBMITTED		DISCIPLINE:	Engineering		
Jan. 29, 2007		REVIEWER:	Bruce Souder/SRP		
REF. #	PAGE	DWG, #SPEC SECTION	COMMENTS/FINDINGS	RESPONSE	ACTION
258			Assume our facilities are outside the stated widths of Art. 3.2.2?	3	We agree. No modification to the manual is required.
259			There appear to be inconsistencies in depth of cover requirements. EG. Pg. 3-4 Art. 3.2.2 existing utilities 4 ft. New 5.5, Pg. 3-5 2nd bullet, "...existing utilities may remain if not less than 4 ft.", then 2nd paragraph "...shall be relocated to 5.5ft."? NESC cover is 50" minimum.	3	These are the METRO minimum requirements not other agencies. No modification to the manual is required.
260			Crossing requirement "casing pipe (sleeve) of approved encasement". Is a guided bore & conduit approved?	3	This would be reviewed on a case by case basis. No modification to the manual is required.

*** RESPONSE: 1=Will Comply 2=Discussion or Clarification Required 3=No Change Required **D=Action Completed**

METRO Design Criteria Manual, Phase II
SUBMITTAL REVIEW COMMENTS

COMMENTS SUBMITTED		DISCIPLINE:	Engineering		
Jan. 30, 2007		REVIEWER:	Rick King /Brown & Caldwell (for City pf Phoenix)		
REF. #	PAGE	DWG, #SPEC SECTION	COMMENTS/FINDINGS	RESPONSE	ACTION
261			Pg. 3-5, 40 ft. above rails & 10 ft. form centerline for overhead facilities, is greater than required by NESC.	3	These are the METRO minimum requirements not other agencies. No modification to the manual is required.
262			Page 3-5: The reference to the City's Design Criteria Manual is incorrect. It needs to be corrected to say the Design Standards Manual for Water and Wastewater Systems.	1	D This was corrected.
263			Figure 3-9 the COP METRO Crossing Casing Detail shows the annular space between the pipe and casing filled with sand. That is not the current practice.	1	D This has been modified.
COMMENTS SUBMITTED		DISCIPLINE:	Engineering		
Jan. 29, 2007		REVIEWER:	COP Streets, Transportation DCM		
REF. #	PAGE	DWG, #SPEC SECTION	COMMENTS/FINDINGS	RESPONSE	ACTION
264			Page 3-19 2nd paragraph from top, 1st sentence. Change to read: The basis of design for alterations of existing and modified streets shall be replaced in kind, unless approved by METRO and the local jurisdiction.	1	D This was changed.
265			Page 3-16 3.4.1.5 Traffic Easements, change to read: Traffic easements may be used for conduits, j-boxes, and loop detectors in areas where sufficient right of way is not available.	1	D This was changed.

*** RESPONSE: 1=Will Comply 2=Discussion or Clarification Required 3=No Change Required **D=Action Completed**

METRO Design Criteria Manual, Phase II
SUBMITTAL REVIEW COMMENTS

COMMENTS SUBMITTED		DISCIPLINE:	Engineering		
Jan. 29, 2007		REVIEWER:	COP Streets, Transportation DCM		
REF. #	PAGE	DWG, #SPEC SECTION	COMMENTS/FINDINGS	RESPONSE	ACTION
266			Page 3-20 Top bullet point, Left and Right Turn Storage = *16' absolute minimum. Do not understand what this means? It should be *16' absolute minimum width.	1	D This section all refers to width, so it is not appropriate to add width to this item only. However, we have added the word Lane to the bullet to be consistent with the other bullet items and moved the length discussion to a note, to avoid confusion between width and length.
267			Third bullet point, Curb lane with parking = *17' absolute minimum. Change to *18' absolute minimum.	1	D This has been changed as requested.

*** RESPONSE: 1=Will Comply 2=Discussion or Clarification Required 3=No Change Required **D=Action Completed**

METRO Design Criteria Manual, Phase II
SUBMITTAL REVIEW COMMENTS

COMMENTS SUBMITTED		DISCIPLINE:	Engineering		
Jan. 29, 2007		REVIEWER:	COP Streets, Transportation DCM		
REF. #	PAGE	DWG, #SPEC SECTION	COMMENTS/FINDINGS	RESPONSE	ACTION
268			3.6.4 Bus Bays Bus bay design shall reference MAG Standard Detail No. 252 with 10' bus bay minimum width and a desirable width of 13'. City of Phoenix has their own standard detail to be used, minimum width is 11'. Change above to include COP Std. Det. and width.	1	D A reference to local jurisdiction has been added to the manual in response to this comment.
269			Page 3-21 3.6.7 Driveway and Alleys, 3rd paragraph Driveways shall not be added for vacant lots. Change to read, "Driveways shall not be added for vacant lots without the approval of the local jurisdiction.	1	D This has been changed as requested, however additional verbage has been added as indicated below, "Driveways shall not be added for vacant lots unless required for the project and approval is received from the local jurisdiction."
270			Page 7-5 7.2.5 Grad Crossings Delete and supersede all other signals from the end of the paragraph. Add "Width shall also govern vehicle and LRT movements."	1	D This has been changed as requested.

*** RESPONSE: 1=Will Comply 2=Discussion or Clarification Required 3=No Change Required **D=Action Completed**

METRO Design Criteria Manual, Phase II
SUBMITTAL REVIEW COMMENTS

COMMENTS SUBMITTED		DISCIPLINE:	Engineering		
Jan. 25, 2007		REVIEWER:	Lois Winkler/APS		
REF. #	PAGE	DWG, #SPEC SECTION	COMMENTS/FINDINGS	RESPONSE	ACTION
271			APS would like under 3.2.4 that under Prior Rights that it say that Easements/Public Utility Easements (PUE) are reimbursable. Also it should be noted that transfer of those rights are made to the new location.	1	D This text has been revised to include Easements/Public Utility Easements (PUE). The text has also been revised to indicate that prior rights typically are transferred. No reference to cost has been included as this is outside the scope of the manual as indicated in Alvin's E-Mail response to APS.

*** RESPONSE: 1=Will Comply 2=Discussion or Clarification Required 3=No Change Required **D=Action Completed**

METRO Design Criteria Manual, Phase II
SUBMITTAL REVIEW COMMENTS

COMMENTS SUBMITTED		DISCIPLINE:	Engineering		
Jan. 25, 2007		REVIEWER:	Aimee Conroy/COP		
REF. #	PAGE	DWG, #SPEC SECTION	COMMENTS/FINDINGS	RESPONSE	ACTION
272			We are also having an internal discussion regarding the use of ductile iron pipe with a ceramic coating for sewer crossings. This is discussed in Section 3.2.1. We are having issues with this pipe not actually being installed because it is confused with water ductile iron pipe. We are currently discussing revising this provision for future line sections.	1	D A statement indicating that that is the standard, unless specified otherwise in the LRT Addendum to give COP the opportunity to modify or expand this criteria if desired.
273			pg 3.5 Additional water and sewer requirements second bullet - clarify that odor control is required during construction only.	1	D This has been changed as requested.
274			Section 3.2.5 - The title of our design standards manual is "Design Standards Manual for Water and Wastewater Systems."	1	D This has been changed as requested.

*** RESPONSE: 1=Will Comply 2=Discussion or Clarification Required 3=No Change Required **D=Action Completed**

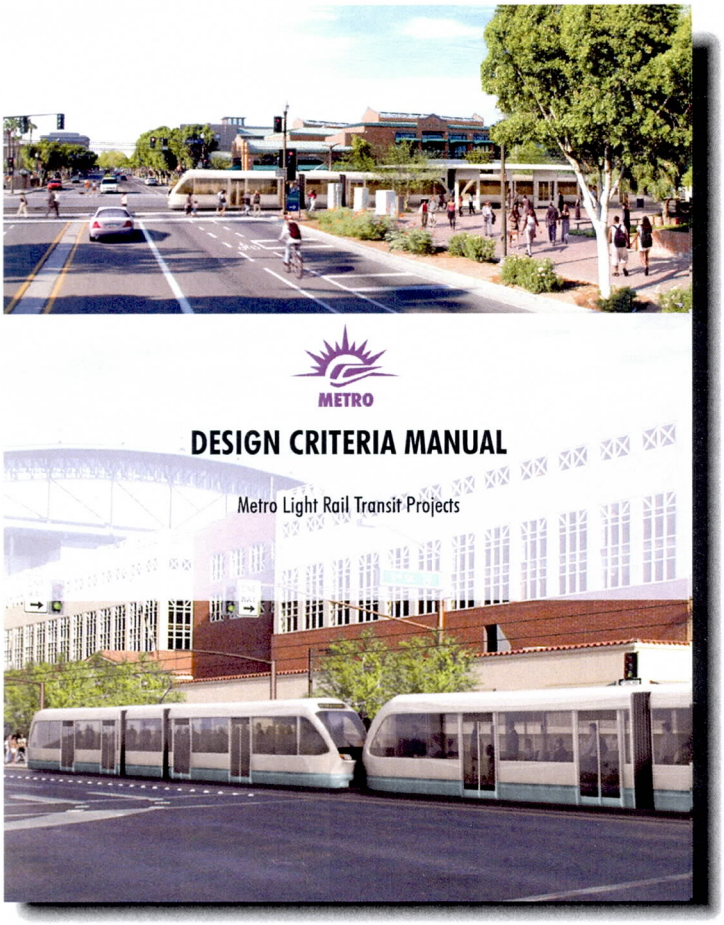

Appendix B

Revision/Deviation Form

METRO	REQUEST FOR REVISION/DEVIATION TO THE DESIGN CRITERIA MANUAL	Section	ENG-003
		Revision	1
		Page	1 of 3
DESIGN & CONSTRUCTION			

Reviewed by	Concurred by Executive Director	Date

1.0 PURPOSE

The purpose of this document is to establish ownership for the Light Rail Project Design Criteria Manual, describe the use of the manual, and to establish a process for revising or deviating from the Manual.

2.0 SCOPE

This process applies to all revisions and deviations to the Light Rail Project Design Criteria Manual.

3.0 RESPONSIBILITIES

Anyone can recommend a revision to or deviation from the Design Criteria Manual.

METRO's Facilities Project Manager; Project Engineer, Project Architect, or Project Systems Engineer, as applicable; and the, Architectural Manager (AM), or Systems Manager (SM), as applicable, shall be responsible for concurring with proposed revisions/deviations to the Design Criteria Manual.

The Division Director shall be responsible for approving revisions/deviations to the Design Criteria Manual.

METRO Project Manager shall be responsible to implement all revisions/deviations, and shall coordinate the revisions/deviations with the affected members of the design team.

4.0 PROCEDURE

4.1 OWNER OF DESIGN CRITERIA MANUAL

The Director of Design and Construction shall be the owner of the Design Criteria Manual and, following the required reviews and approvals, shall approve and authenticate the Manual and revisions thereto by signing and dating the title page prior to controlled distribution.

4.2 USE OF DESIGN CRITERIA MANUAL

The Design Criteria Manual contains the design standards and policies for final design of METRO LRT projects. Project designers shall consult the Manual, identify the applicable design criteria for their scope of work, and assure their designs incorporate or meet the design criteria or authorized deviations there from.

4.3 REVISE THE DESIGN CRITERIA MANUAL

A revision to the Design Criteria Manual may be necessary where standards need to be updated or a generic change applicable to the whole Project is appropriate.

A request for a revision to the Design Criteria Manual can be made by anyone on the Light Rail Project. A request is made by filling out a Revision/Deviation Request (DR) Form (see Attachment A). Sufficient documentation to show the need for the revision should be attached to the form.

The form with attachments shall be submitted to METRO's Project Manager (PM) for review and concurrence. If accepted, the form shall be forwarded to METRO's design consultant for review and concurrence. Once accepted by METRO, it shall be forwarded to the Project Engineer, or the Project Architect (PE/PA), or Systems Engineer (SE), as applicable, for review and concurrence.

The PM/PE/PA/SE shall review the request and, once accepted, shall forward it to the FM/AM/SM for review. If the request is accepted, the form shall be submitted to the Director of Design and Construction for review. If approved, the completed request shall be forwarded to Document Control for distribution to all personnel listed on the form and to the Document Control file for Design Criteria Manual revisions/deviations. For approved changes, METRO's Project Manager shall be responsible for updating the Design Criteria Manual, and sending the revised pages to Document Control for distribution to controlled copyholders.

4.4 DEVIATIONS TO DESIGN CRITERIA MANUAL

Specific exceptions or deviations to the Design Criteria Manual may be taken in special cases without revising the Manual. In addition, identification of Concurrent Non Project Activities (CNPA) can be identified without revising the manual. Project designers are responsible for identifying necessary departures from the Manual and bringing it to the attention of applicable management using the Revision/Deviation Request Form. Sufficient documentation showing the need for the deviation should be attached to the form.

The review and approval process is the same as for revising the Design Criteria Manual (see Section 4.3).

If approved, the completed form shall be forwarded to Document Control for distribution to all the personnel listed on the form and to the Document Control file for Design Criteria Manual revisions/deviations.

For approved deviations, METRO's Project Manager shall be responsible for notifying the applicable requester, and other applicable designers, of the approved deviation. The Design Report for a Submittal to the Agency that incorporates the approved deviation shall identify the deviation and reference the approval thereof.

5.0 RECORDS

A copy of the completed "METRO Design Criteria Manual Revision/Deviation Request Form" shall be placed in the Document Control files.

6.0 REFERENCES

Design Criteria Manual, 1.2 Purpose and Scope

Project Management Plan

7.0 ATTACHMENTS

Attachment A – "METRO Design Criteria Manual Revision/Deviation Request Form"

METRO

METRO
DESIGN CRITERIA MANUAL
REVISION/DEVIATION REQUEST FORM

Document Control No. _____

☐ REVISION REQUEST ☐ CNPA REQUEST ☐ DEVIATION REQUEST

Requestor: _____ _____ _____
PRINT NAME SIGNATURE DATE

DESCRIPTION:

BACKGROUND:

JUSTIFICATION: (Attach additional Sheets if Necessary)

SCHEDULE IMPACT:	☐	YES	☐	NO	COST IMPACT:	☐ YES	☐ NO
QUALITY IMPACT:	☐	YES	☐	NO	SAFETY IMPA	☐ YES	☐ NO

CONCURENCE/APPROVAL

METRO PROJECT ENGINEER/ARCHITECT/SYSTEMS ENGINEER:

_____ _____ _____
PRINT NAME SIGNATURE DATE

METRO PROJECT MANAGER (FACILITIES ENGINEERING):

_____ _____ _____
PRINT NAME SIGNATURE DATE

METRO DIRECTOR OF DESIGN AND CONSTRUCTION

_____ _____ _____
PRINT NAME SIGNATURE DATE

CITY OF PHOENIX REQUEST FOR DEVIATION FROM DESIGN GUIDELINES

Water and Sanitary Sewer Relocations for the Light Rail Project

Request No. _____

Line Type: <Water/Wastewater>

Size: <Diameter in inches>

Material: <Pipe material type>

Location:

Description: <Road names>

Station: <Project Station>

Line Direction: <N-S or E-W>

Sheet No.: <Project Drawing No.>

Requested by: <Consultant>

Date of Request: <Date>

Detailed Description of Issue

Proposed Action or Alternative

Brown and Caldwell/City of Phoenix Comments

Consultant	METRO	Brown and Caldwell City of Phoenix
Print Name		